AUTHENTICATED
U.S. GOVERNMENT
INFORMATION
GPO

Code of Federal Regulations

40

Parts 72 to 80

Revised as of July 1, 2010

Protection of Environment

Containing a codification of documents of general applicability and future effect

As of July 1, 2010

With Ancillaries

Published by
Office of the Federal Register
National Archives and Records
Administration

A Special Edition of the Federal Register

U.S. GOVERNMENT OFFICIAL EDITION NOTICE

Legal Status and Use of Seals and Logos

The seal of the National Archives and Records Administration (NARA) authenticates the Code of Federal Regulations (CFR) as the official codification of Federal regulations established under the Federal Register Act. Under the provisions of 44 U.S.C. 1507, the contents of the CFR, a special edition of the Federal Register, shall be judicially noticed. The CFR is prima facie evidence of the original documents published in the Federal Register (44 U.S.C. 1510).

It is prohibited to use NARA's official seal and the stylized Code of Federal Regulations logo on any republication of this material without the express, written permission of the Archivist of the United States or the Archivist's designee. Any person using NARA's official seals and logos in a manner inconsistent with the provisions of 36 CFR part 1200 is subject to the penalties specified in 18 U.S.C. 506, 701, and 1017.

Use of ISBN Prefix

This is the Official U.S. Government edition of this publication and is herein identified to certify its authenticity. Use of the 0–16 ISBN prefix is for U.S. Government Printing Office Official Editions only. The Superintendent of Documents of the U.S. Government Printing Office requests that any reprinted edition clearly be labeled as a copy of the authentic work with a new ISBN.

U.S. GOVERNMENT PRINTING OFFICE

U.S. Superintendent of Documents • Washington, DC 20402–0001

http://bookstore.gpo.gov

Phone: toll-free (866) 512-1800; DC area (202) 512-1800

Table of Contents

	Page
Explanation	v
Title 40:	
Chapter I—Environmental Protection Agency (Continued)	3
Finding Aids:	
Table of CFR Titles and Chapters	1181
Alphabetical List of Agencies Appearing in the CFR	1201
List of CFR Sections Affected	1211

Cite this Code: CFR

To cite the regulations in this volume use title, part and section number. Thus, 40 CFR 72.1 *refers to title 40, part 72, section 1.*

Explanation

The Code of Federal Regulations is a codification of the general and permanent rules published in the Federal Register by the Executive departments and agencies of the Federal Government. The Code is divided into 50 titles which represent broad areas subject to Federal regulation. Each title is divided into chapters which usually bear the name of the issuing agency. Each chapter is further subdivided into parts covering specific regulatory areas.

Each volume of the Code is revised at least once each calendar year and issued on a quarterly basis approximately as follows:

Title 1 through Title 16.....as of January 1
Title 17 through Title 27.....as of April 1
Title 28 through Title 41.....as of July 1
Title 42 through Title 50.....as of October 1

The appropriate revision date is printed on the cover of each volume.

LEGAL STATUS

The contents of the Federal Register are required to be judicially noticed (44 U.S.C. 1507). The Code of Federal Regulations is prima facie evidence of the text of the original documents (44 U.S.C. 1510).

HOW TO USE THE CODE OF FEDERAL REGULATIONS

The Code of Federal Regulations is kept up to date by the individual issues of the Federal Register. These two publications must be used together to determine the latest version of any given rule.

To determine whether a Code volume has been amended since its revision date (in this case, July 1, 2010), consult the ''List of CFR Sections Affected (LSA),'' which is issued monthly, and the ''Cumulative List of Parts Affected,'' which appears in the Reader Aids section of the daily Federal Register. These two lists will identify the Federal Register page number of the latest amendment of any given rule.

EFFECTIVE AND EXPIRATION DATES

Each volume of the Code contains amendments published in the Federal Register since the last revision of that volume of the Code. Source citations for the regulations are referred to by volume number and page number of the Federal Register and date of publication. Publication dates and effective dates are usually not the same and care must be exercised by the user in determining the actual effective date. In instances where the effective date is beyond the cutoff date for the Code a note has been inserted to reflect the future effective date. In those instances where a regulation published in the Federal Register states a date certain for expiration, an appropriate note will be inserted following the text.

OMB CONTROL NUMBERS

The Paperwork Reduction Act of 1980 (Pub. L. 96–511) requires Federal agencies to display an OMB control number with their information collection request.

Many agencies have begun publishing numerous OMB control numbers as amendments to existing regulations in the CFR. These OMB numbers are placed as close as possible to the applicable recordkeeping or reporting requirements.

OBSOLETE PROVISIONS

Provisions that become obsolete before the revision date stated on the cover of each volume are not carried. Code users may find the text of provisions in effect on a given date in the past by using the appropriate numerical list of sections affected. For the period before January 1, 2001, consult either the List of CFR Sections Affected, 1949–1963, 1964–1972, 1973–1985, or 1986–2000, published in eleven separate volumes. For the period beginning January 1, 2001, a ''List of CFR Sections Affected'' is published at the end of each CFR volume.

''[RESERVED]'' TERMINOLOGY

The term ''[Reserved]'' is used as a place holder within the Code of Federal Regulations. An agency may add regulatory information at a ''[Reserved]'' location at any time. Occasionally ''[Reserved]'' is used editorially to indicate that a portion of the CFR was left vacant and not accidentally dropped due to a printing or computer error.

INCORPORATION BY REFERENCE

What is incorporation by reference? Incorporation by reference was established by statute and allows Federal agencies to meet the requirement to publish regulations in the Federal Register by referring to materials already published elsewhere. For an incorporation to be valid, the Director of the Federal Register must approve it. The legal effect of incorporation by reference is that the material is treated as if it were published in full in the Federal Register (5 U.S.C. 552(a)). This material, like any other properly issued regulation, has the force of law.

What is a proper incorporation by reference? The Director of the Federal Register will approve an incorporation by reference only when the requirements of 1 CFR part 51 are met. Some of the elements on which approval is based are:

(a) The incorporation will substantially reduce the volume of material published in the Federal Register.

(b) The matter incorporated is in fact available to the extent necessary to afford fairness and uniformity in the administrative process.

(c) The incorporating document is drafted and submitted for publication in accordance with 1 CFR part 51.

What if the material incorporated by reference cannot be found? If you have any problem locating or obtaining a copy of material listed as an approved incorporation by reference, please contact the agency that issued the regulation containing that incorporation. If, after contacting the agency, you find the material is not available, please notify the Director of the Federal Register, National Archives and Records Administration, 8601 Adelphi Road, College Park, MD 20740-6001, or call 202-741-6010.

CFR INDEXES AND TABULAR GUIDES

A subject index to the Code of Federal Regulations is contained in a separate volume, revised annually as of January 1, entitled CFR INDEX AND FINDING AIDS. This volume contains the Parallel Table of Authorities and Rules. A list of CFR titles, chapters, subchapters, and parts and an alphabetical list of agencies publishing in the CFR are also included in this volume.

An index to the text of ''Title 3—The President'' is carried within that volume.

The Federal Register Index is issued monthly in cumulative form. This index is based on a consolidation of the ''Contents'' entries in the daily Federal Register.

A List of CFR Sections Affected (LSA) is published monthly, keyed to the revision dates of the 50 CFR titles.

REPUBLICATION OF MATERIAL

There are no restrictions on the republication of material appearing in the Code of Federal Regulations.

INQUIRIES

For a legal interpretation or explanation of any regulation in this volume, contact the issuing agency. The issuing agency's name appears at the top of odd-numbered pages.

For inquiries concerning CFR reference assistance, call 202–741–6000 or write to the Director, Office of the Federal Register, National Archives and Records Administration, 8601 Adelphi Road, College Park, MD 20740-6001 or e-mail fedreg.info@nara.gov.

SALES

The Government Printing Office (GPO) processes all sales and distribution of the CFR. For payment by credit card, call toll-free, 866-512-1800, or DC area, 202-512-1800, M-F 8 a.m. to 4 p.m. e.s.t. or fax your order to 202-512-2250, 24 hours a day. For payment by check, write to: US Government Printing Office – New Orders, P.O. Box 979050, St. Louis, MO 63197-9000. For GPO Customer Service call 202-512-1803.

ELECTRONIC SERVICES

The full text of the Code of Federal Regulations, the LSA (List of CFR Sections Affected), The United States Government Manual, the Federal Register, Public Laws, Public Papers, Daily Compilation of Presidential Documents and the Privacy Act Compilation are available in electronic format via *Federalregister.gov*. For more information, contact Electronic Information Dissemination Services, U.S. Government Printing Office. Phone 202-512-1530, or 888-293-6498 (toll-free). E-mail, *gpoaccess@gpo.gov*.

The Office of the Federal Register also offers a free service on the National Archives and Records Administration's (NARA) World Wide Web site for public law numbers, Federal Register finding aids, and related information. Connect to NARA's web site at *www.archives.gov/federal-register*. The NARA site also contains links to GPO Access.

RAYMOND A. MOSLEY,
Director,
Office of the Federal Register.
July 1, 2010.

THIS TITLE

Title 40—PROTECTION OF ENVIRONMENT is composed of thirty-two volumes. The parts in these volumes are arranged in the following order: parts 1–49, parts 50–51, part 52 (52.01–52.1018), part 52 (52.1019–end of part 52), parts 53–59, part 60 (60.1–end of part 60, sections), part 60 (Appendices), parts 61–62, part 63 (63.1–63.599), part 63 (63.600–63.1199), part 63 (63.1200–63.1439), part 63 (63.1440–63.6175), part 63 (63.6580–63.8830), part 63 (63.8980–end of part 63) parts 64–71, parts 72–80, parts 81–84, part 85–§ 86.599–99, part 86 (86.600–1–end of part 86), parts 87–99, parts 100–135, parts 136–149, parts 150–189, parts 190–259, parts 260–265, parts 266–299, parts 300–399, parts 400–424, parts 425–699, parts 700–789, parts 790–999, and part 1000 to end. The contents of these volumes represent all current regulations codified under this title of the CFR as of July 1, 2010.

Chapter I—Environmental Protection Agency appears in all thirty-two volumes. Regulations issued by the Council on Environmental Quality, including an Index to Parts 1500 through 1508, appear in the volume containing part 1000 to end. The OMB control numbers for title 40 appear in § 9.1 of this chapter.

For this volume, Susannah C. Hurley was Chief Editor. The Code of Federal Regulations publication program is under the direction of Michael L. White, assisted by Ann Worley.

Title 40—Protection of Environment

(This book contains parts 72 to 80)

Part

CHAPTER I—Environmental Protection Agency (Continued) 72

CHAPTER I—ENVIRONMENTAL PROTECTION AGENCY (CONTINUED)

EDITORIAL NOTE: Nomenclature changes to chapter I appear at 65 FR 47324, 47325, Aug. 2, 2000; 66 FR 34375, 34376, June 28, 2001; and 69 FR 18803, Apr. 9, 2004.

SUBCHAPTER C—AIR PROGRAMS (CONTINUED)

Part		*Page*
72	Permits regulation	5
73	Sulfur dioxide allowance system	91
74	Sulfur dioxide opt-ins	177
75	Continuous emission monitoring	204
76	Acid rain nitrogen oxides emission reduction program	488
77	Excess emissions	512
78	Appeal procedures	519
79	Registration of fuels and fuel additives	532
80	Regulation of fuels and fuel additives	627

SUBCHAPTER C—AIR PROGRAMS (CONTINUED)

PART 72—PERMITS REGULATION

Subpart A—Acid Rain Program General Provisions

Sec.
72.1 Purpose and scope.
72.2 Definitions.
72.3 Measurements, abbreviations, and acronyms.
72.4 Federal authority.
72.5 State authority.
72.6 Applicability.
72.7 New units exemption.
72.8 Retired units exemption.
72.9 Standard requirements.
72.10 Availability of information.
72.11 Computation of time.
72.12 Administrative appeals.
72.13 Incorporation by reference.

Subpart B—Designated Representative

72.20 Authorization and responsibilities of the designated representative.
72.21 Submissions.
72.22 Alternate designated representative.
72.23 Changing the designated representative, alternate designated representative; changes in the owners and operators.
72.24 Certificate of representation.
72.25 Objections.
72.26 Delegation by designated representative and alternate designated representative.

Subpart C—Acid Rain Permit Applications

72.30 Requirement to apply.
72.31 Information requirements for Acid Rain permit applications.
72.32 Permit application shield and binding effect of permit application.
72.33 Identification of dispatch system.

Subpart D—Acid Rain Compliance Plan and Compliance Options

72.40 General.
72.41 Phase I substitution plans.
72.42 Phase I extension plans.
72.43 Phase I reduced utilization plans.
72.44 Phase II repowering extensions.

Subpart E—Acid Rain Permit Contents

72.50 General.
72.51 Permit shield.

Subpart F—Federal Acid Rain Permit Issuance Procedures

72.60 General.
72.61 Completeness.
72.62 Draft permit.
72.63 Administrative record.
72.64 Statement of basis.
72.65 Public notice of opportunities for public comment.
72.66 Public comments.
72.67 Opportunity for public hearing.
72.68 Response to comments.
72.69 Issuance and effective date of acid rain permits.

Subpart G—Acid Rain Phase II Implementation

72.70 Relationship to title V operating permit program.
72.71 Acceptance of State Acid Rain programs—general.
72.72 Criteria for State operating permit program.
72.73 State issuance of Phase II permits.
72.74 Federal issuance of Phase II permits.

Subpart H—Permit Revisions

72.80 General.
72.81 Permit modifications.
72.82 Fast-track modifications.
72.83 Administrative permit amendment.
72.84 Automatic permit amendment.
72.85 Permit reopenings.

Subpart I—Compliance Certification

72.90 Annual compliance certification report.
72.91 Phase I unit adjusted utilization.
72.92 Phase I unit allowance surrender.
72.93 Units with Phase I extension plans.
72.94 Units with repowering extension plans.
72.95 Allowance deduction formula.
72.96 Administrator's action on compliance certifications.

APPENDIX A TO PART 72—METHODOLOGY FOR ANNUALIZATION OF EMISSIONS LIMITS
APPENDIX B TO PART 72—METHODOLOGY FOR CONVERSION OF EMISSIONS LIMITS
APPENDIX C TO PART 72—ACTUAL 1985 YEARLY SO_2 EMISSIONS CALCULATION
APPENDIX D TO PART 72—CALCULATION OF POTENTIAL ELECTRIC OUTPUT CAPACITY

AUTHORITY: 42 U.S.C. 7601 and 7651 *et seq.*

SOURCE: 58 FR 3650, Jan. 11, 1993, unless otherwise noted.

Subpart A—Acid Rain Program General Provisions

§ 72.1 Purpose and scope.

(a) *Purpose*. The purpose of this part is to establish certain general provisions and the operating permit program requirements for affected sources and affected units under the Acid Rain Program, pursuant to title IV of the Clean Air Act, 42 U.S.C. 7401, *et seq.*, as amended by Public Law 101–549 (November 15, 1990).

(b) *Scope*. The regulations under this part set forth certain generally applicable provisions under the Acid Rain Program. The regulations also set forth requirements for obtaining three types of Acid Rain permits, during Phases I and II, for which an affected source may apply: Acid Rain permits issued by the United States Environmental Protection Agency during Phase I; the Acid Rain portion of an operating permit issued by a State permitting authority during Phase II; and the Acid Rain portion of an operating permit issued by EPA when it is the permitting authority during Phase II. The requirements under this part supplement, and in some cases modify, the requirements under parts 70 and 71 of this chapter and other regulations implementing title V for approving and implementing State operating permit programs and for Federal issuance of operating permits under title V, as such requirements apply to affected sources under the Acid Rain Program.

[58 FR 3650, Jan. 11, 1993, as amended at 62 FR 55475, Oct. 24, 1997]

§ 72.2 Definitions.

The terms used in this part, in parts 73, 74, 75, 76, 77 and 78 of this chapter shall have the meanings set forth in the Act, including sections 302 and 402 of the Act, and in this section as follows:

Account number means the identification number given by the Administrator to each Allowance Tracking System account pursuant to § 73.31(d) of this chapter.

Acid Rain compliance option means one of the methods of compliance used by an affected unit under the Acid Rain Program as described in a compliance plan submitted and approved in accordance with subpart D of this part, part 74 of this chapter or part 76 of this chapter.

Acid Rain emissions limitation means:

(1) For purposes of sulfur dioxide emissions:

(i) The tonnage equivalent of the allowances authorized to be allocated to the affected units at a source for use in a calendar year under section 404(a)(1), (a)(3), and (h) of the Act, or the basic Phase II allowance allocations authorized to be allocated to an affected unit for use in a calendar year, or the allowances authorized to be allocated to an opt-in source under section 410 of the Act for use in a calendar year;

(ii) As adjusted:

(A) By allowances allocated by the Administrator pursuant to section 403, section 405 (a)(2), (a)(3), (b)(2), (c)(4), (d)(3), and (h)(2), and section 406 of the Act;

(B) By allowances allocated by the Administrator pursuant to subpart D of this part; and thereafter

(C) By allowance transfers to or from the compliance account for that source that were recorded or properly submitted for recordation by the allowance transfer deadline as provided in § 73.35 of this chapter, after deductions and other adjustments are made pursuant to § 73.34(c) of this chapter; and

(2) For purposes of nitrogen oxides emissions, the applicable limitation under part 76 of this chapter.

Acid Rain emissions reduction requirement means a requirement under the Acid Rain Program to reduce the emissions of sulfur dioxide or nitrogen oxides from a unit to a specified level or by a specified percentage.

Acid Rain permit or permit means the legally binding written document or portion of such document, including any permit revisions, that is issued by a permitting authority under this part and specifies the Acid Rain Program requirements applicable to an affected source and to the owners and operators and the designated representative of the affected source or the affected unit.

Acid Rain Program means the national sulfur dioxide and nitrogen oxides air pollution control and emissions reduction program established in accordance with title IV of the Act, this

part, and parts 73, 74, 75, 76, 77, and 78 of this chapter.

Act means the Clean Air Act, 42 U.S.C. 7401, *et seq.* as amended by Public Law No. 101–549 (November 15, 1990).

Actual SO_2 emissions rate means the annual average sulfur dioxide emissions rate for the unit (expressed in lb/mmBtu), for the specified calendar year; *provided* that, if the unit is listed in the NADB, the ''1985 actual SO_2 emissions rate'' for the unit shall be the rate specified by the Administrator in the NADB under the data field ''SO2RTE.''

Add-on control means a pollution reduction control technology that operates independent of the combustion process.

Additional advance auction means the auction of advance allowances that were offered the previous year for sale in an advance sale.

Administrator means the Administrator of the United States Environmental Protection Agency or the Administrator's duly authorized representative.

Advance allowance means an allowance that may be used for purposes of compliance with a source Acid Rain sulfur dioxide emissions limitation requirements beginning no earlier than seven years following the year in which the allowance is first offered for sale.

Advance auction means an auction of advance allowances.

Advance sale means a sale of advance allowances.

Affected source means a source that includes one or more affected units.

Affected States means any affected States as defined in part 71 of this chapter.

Affected unit means a unit that is subject to any Acid Rain emissions reduction requirement or Acid Rain emissions limitation under § 72.6 or part 74 of this chapter.

Affiliate shall have the meaning set forth in section 2(a)(11) of the Public Utility Holding Company Act of 1935, 15 U.S.C. 79b(a)(11), as of November 15, 1990.

Air Emission Testing Body (AETB) means a company or other entity that conducts Air Emissions Testing as described in ASTM D7036–04 (incorporated by reference under § 75.6 of this part).

Allocate or allocation means the initial crediting of an allowance by the Administrator to an Allowance Tracking System compliance account or general account.

Allowable SO_2 emissions rate means the most stringent federally enforceable emissions limitation for sulfur dioxide (in lb/mmBtu) applicable to the unit or combustion source for the specified calendar year, or for such subsequent year as determined by the Administrator where such a limitation does not exist for the specified year; provided that, if a Phase I or Phase II unit is listed in the NADB, the ''1985 allowable SO_2 emissions rate'' for the Phase I or Phase II unit shall be the rate specified by the Administrator in the NADB under the data field ''1985 annualized boiler SO_2 emission limit.''

Allowance means an authorization by the Administrator under the Acid Rain Program to emit up to one ton of sulfur dioxide during or after a specified calendar year.

Allowance deduction, or deduct when referring to allowances, means the permanent withdrawal of allowances by the Administrator from an Allowance Tracking System compliance account to account for the number of tons of SO_2 emissions from the affected units at an affected source for the calendar year, for tonnage emissions estimates calculated for periods of missing data as provided in part 75 of this chapter, or for any other allowance surrender obligations of the Acid Rain Program.

Allowances held or hold allowances means the allowances recorded by the Administrator, or submitted to the Administrator for recordation in accordance with § 73.50 of this chapter, in an Allowance Tracking System account.

Allowance reserve means any bank of allowances established by the Administrator in the Allowance Tracking System pursuant to sections 404(a)(2) (Phase I extension reserve), 404(g) (energy conservation and renewable energy reserve), or 416(b) (special allowance reserve) of the Act, and implemented in accordance with part 73, subpart B of this chapter.

Allowance Tracking System or ATS means the Acid Rain Program system by which the Administrator allocates,

records, deducts, and tracks allowances.

Allowance Tracking System account means an account in the Allowance Tracking System established by the Administrator for purposes of allocating, holding, transferring, and using allowances.

Allowance transfer deadline means midnight of March 1 (or February 29 in any leap year) or, if such day is not a business day, midnight of the first business day thereafter and is the deadline by which allowances may be submitted for recordation in an affected source's compliance account for the purposes of meeting the source's Acid Rain emissions limitation requirements for sulfur dioxide for the previous calendar year.

Alternative monitoring system means a system or a component of a system designed to provide direct or indirect data of mass emissions per time period, pollutant concentrations, or volumetric flow, that is demonstrated to the Administrator as having the same precision, reliability, accessibility, and timeliness as the data provided by a certified CEMS or certified CEMS component in accordance with part 75 of this chapter.

As-fired means the taking of a fuel sample just prior to its introduction into the unit for combustion.

Auction subaccount means a subaccount in the Special Allowance Reserve, as specified in section 416(b) of the Act, which contains allowances to be sold at auction in the amount of 150,000 per year from calendar year 1995 through 1999, inclusive, and 200,000 per year for each year begnning in calendar year 2000, subject to the adjustments noted in the regulations in part 73, subpart E of this chapter.

Authorized account representative means a responsible natural person who is authorized, in accordance with part 73 of this chapter, to transfer and otherwise dispose of allowances held in an Allowance Tracking System general account; or, in the case of a compliance account, the designated representative of the owners and operators of the affected source and the affected units at the source.

Automated data acquisition and handling system means that component of the CEMS, COMS, or other emissions monitoring system approved by the Administrator for use in the Acid Rain Program, designed to interpret and convert individual output signals from pollutant concentration monitors, flow monitors, diluent gas monitors, moisture monitors, opacity monitors, and other component parts of the monitoring system to produce a continuous record of the measured parameters in the measurement units required by part 75 of this chapter.

Award means the conditional set-aside by the Administrator, based on the submission of an early ranking application pursuant to subpart D of this part, of an allowance from the Phase I extension reserve, for possible future allocation to a Phase I extension applicant's Allowance Tracking System unit account.

Backup fuel means a fuel for a unit where: (1) For purposes of the requirements of the monitoring exception of appendix E of part 75 of this chapter, the fuel provides less than 10.0 percent of the heat input to a unit during the three calendar years prior to certification testing for the primary fuel and the fuel provides less than 15.0 percent of the heat input to a unit in each of those three calendar years; or the Administrator approves the fuel as a backup fuel; and (2) For all other purposes under the Acid Rain Program, a fuel that is not the primary fuel (expressed in mmBtu) consumed by an affected unit for the applicable calendar year.

Baseline means the annual average quantity of fossil fuel consumed by a unit, measured in millions of British Thermal Units (expressed in mmBtu) for calendar years 1985 through 1987; *provided* that in the event that a unit is listed in the NADB, the baseline will be calculated for each unit-generator pair that includes the unit, and the unit's baseline will be the sum of such unit-generator baselines. The unit-generator baseline will be as provided in the NADB under the data field ''BASE8587'', as adjusted by the outage hours listed in the NADB under the data field ''OUTAGEHR'' in accordance with the following equation:

Baseline = BASE8587 × {26280 / (26280 − OUTAGEHR)} × {36 / (36 − months not on line)} × 10^6

''Months not on line'' is the number of months during January 1985 through December 1987 prior to the commencement of firing for units that commenced firing in that period, i.e., the number of months, in that period, prior to the on-line month listed under the data field ''BLRMNONL'' and the on-line year listed in the data field ''BLRYRONL'' in the NADB.

Basic Phase II allowance allocations means:

(1) For calendar years 2000 through 2009 inclusive, allocations of allowances made by the Administrator pursuant to section 403 and section 405 (b)(1), (3), and (4); (c)(1), (2), (3), and (5); (d)(1), (2), (4), and (5); (e); (f); (g)(1), (2), (3), (4), and (5); (h)(1); (i); and (j).

(2) For each calendar year beginning in 2010, allocations of allowances made by the Administrator pursuant to section 403 and section 405 (b)(1), (3), and (4); (c)(1), (2), (3), and (5); (d)(1), (2), (4), and (5); (e); (f); (g)(1), (2), (3), (4), and (5); (h)(1) and (3); (i); and (j).

Bias means systematic error, resulting in measurements that will be either consistently low or high relative to the reference value.

Boiler means an enclosed fossil or other fuel-fired combustion device used to produce heat and to transfer heat to recirculating water, steam, or any other medium.

Bypass operating quarter means a calendar quarter during which emissions pass through a stack, duct or flue that bypasses add-on emission controls.

Bypass stack means any duct, stack, or conduit through which emissions from an affected unit may or do pass to the atmosphere, which either augments or substitutes for the principal stack exhaust system or ductwork during any portion of the unit's operation.

Calibration error means the difference between:

(1) The response of a gaseous monitor to a calibration gas and the known concentration of the calibration gas;

(2) The response of a flow monitor to a reference signal and the known value of the reference signal; or

(3) The response of a continuous opacity monitoring system to an attenuation filter and the known value of the filter after a stated period of operation during which no unscheduled maintenance, repair, or adjustment took place.

Calibration gas means:

(1) A standard reference material;

(2) A standard reference material-equivalent compressed gas primary reference material;

(3) A NIST traceable reference material;

(4) NIST/EPA-approved certified reference materials;

(5) A gas manufacturer's intermediate standard;

(6) An EPA protocol gas;

(7) Zero air material; or

(8) A research gas mixture.

Capacity factor means either:

(1) The ratio of a unit's actual annual electric output (expressed in MWe/hr) to the unit's nameplate capacity (or maximum observed hourly gross load (in MWe/hr) if greater than the nameplate capacity) times 8760 hours; or

(2) The ratio of a unit's annual heat input (in million British thermal units or equivalent units of measure) to the unit's maximum rated hourly heat input rate (in million British thermal units per hour or equivalent units of measure) times 8,760 hours.

CEMS precision or precision as applied to the monitoring requirements of part 75 of this chapter, means the closeness of a measurement to the actual measured value expressed as the uncertainty associated with repeated measurements of the same sample or of different samples from the same process (e.g., the random error associated with simultaneous measurements of a process made by more than one instrument). A measurement technique is determined to have increasing ''precision'' as the variation among the repeated measurements decreases.

Centroidal area means a representational concentric area that is geometrically similar to the stack or duct cross section, and is not greater than 1 percent of the stack or duct cross-sectional area.

Certificate of representation means the completed and signed submission required by § 72.20, for certifying the appointment of a designated representative for an affected source or a group of

identified affected sources authorized to represent the owners and operators of such source(s) and of the affected units at such source(s) with regard to matters under the Acid Rain Program.

Certifying official, for purposes of part 73 of this chapter, means:

(1) For a corporation, a president, secretary, treasurer, or vice-president of the corporation in charge of a principal business function, or any other person who performs similar policy or decision-making functions for the corporation;

(2) For partnership or sole proprietorship, a general partner or the proprietor, respectively; and

(3) For a local government entity or State, Federal, or other public agency, either a principal executive officer or ranking elected official.

Coal means all solid fuels classified as anthracite, bituminous, subbituminous, or lignite by the American Society for Testing and Materials Designation ASTM D388–92 ''Standard Classification of Coals by Rank'' (as incorporated by reference in § 72.13).

Coal-derived fuel means any fuel, whether in a solid, liquid, or gaseous state, produced by the mechanical, thermal, or chemical processing of coal (e.g., pulverized coal, coal refuse, liquified or gasified coal, washed coal, chemically cleaned coal, coal-oil mixtures, and coke).

Coal-fired means the combustion of fuel consisting of coal or any coal-derived fuel (except a coal-derived gaseous fuel that meets the definition of ''very low sulfur fuel'' in this section), alone or in combination with any other fuel, where:

(1) For purposes of the requirements of part 75 of this chapter, a unit is ''coal-fired'' independent of the percentage of coal or coal-derived fuel consumed in any calendar year (expressed in mmBtu); and

(2) For all other purposes under the Acid Rain Program, except for purposes of applying part 76 of this chapter, a unit is ''coal-fired'' if it uses coal or coal-derived fuel as its primary fuel (expressed in mmBtu); *provided* that, if the unit is listed in the NADB, the primary fuel is the fuel listed in the NADB under the data field ''PRIMEFUEL''.

Cogeneration unit means a unit that has equipment used to produce electric energy and forms of useful thermal energy (such as heat or steam) for industrial, commercial, heating, or cooling purposes, through sequential use of energy.

Combustion source means a stationary fossil fuel fired boiler, turbine, or internal combustion engine that has submitted or intends to submit an opt-in permit application under § 74.14 of this chapter to enter the Opt-in Program.

Commence commercial operation means to have begun to generate electricity for sale, including the sale of test generation.

Commence construction means that an owner or operator has either undertaken a continuous program of construction or has entered into a contractual obligation to undertake and complete, within a reasonable time, a continuous program of construction.

Commence operation means to have begun any mechanical, chemical, or electronic process, including start-up of an emissions control technology or emissions monitor or of a unit's combustion chamber.

Common pipe means an oil or gas supply line through which the same type of fuel is distributed to two or more affected units.

Common pipe operating time means the portion of a clock hour during which fuel flows through a common pipe. The common pipe operating time, in hours, is expressed as a decimal fraction, with valid values ranging from 0.00 to 1.00.

Common stack means the exhaust of emissions from two or more units through a single flue.

Compensating unit means an affected unit that is not otherwise subject to Acid Rain emissions limitation or Acid Rain emissions reduction requirements during Phase I and that is designated as a Phase I unit in a reduced utilization plan under § 72.43; provided that an opt-in source shall not be a compensating unit.

Compliance account means an Allowance Tracking System account, established by the Administrator under § 73.31(a) or (b) of this chapter or § 74.40(a) of this chapter for an affected source and for each affected unit at the source.

Compliance certification means a submission to the Administrator or permitting authority, as appropriate, that is required by this part, by part 73, 74, 75, 76, 77, or 78 of this chapter, to report an affected source or an affected unit's compliance or non-compliance with a provision of the Acid Rain Program and that is signed and verified by the designated representative in accordance with subparts B and I of this part and the Acid Rain Program regulations generally.

Compliance plan, for the purposes of the Acid Rain Program, means the document submitted for an affected source in accordance with subpart C of this part or subpart E of part 74 of this chapter, or part 76 of this chapter, specifying the method(s) (including one or more Acid Rain compliance options as provided under subpart D of this part or subpart E of part 74 of this chapter, or part 76 of this chapter) by which each affected unit at the source will meet the applicable Acid Rain emissions limitation and Acid Rain emissions reduction requirements.

Compliance use date means the first calendar year for which an allowance may be used for purposes of meeting a source's Acid Rain emissions limitation for sulfur dioxide.

Conditionally valid data means data from a continuous monitoring system that are not quality-assured, but which may become quality-assured if certain conditions are met. Examples of data that may qualify as conditionally valid are: data recorded by an uncertified monitoring system prior to its initial certification; or data recorded by a certified monitoring system following a significant change to the system that may affect its ability to accurately measure and record emissions. A monitoring system must pass a probationary calibration error test, in accordance with section 2.1.1 of appendix B to part 75 of this chapter, to initiate the conditionally valid data status. In order for conditionally valid emission data to become quality-assured, one or more quality assurance tests or diagnostic tests must be passed within a specified time period in accordance with § 75.20(b)(3).

Conservation Verification Protocol means a methodology developed by the Administrator for calculating the kilowatt hour savings from energy conservation measures and improved unit efficiency measures for the purposes of title IV of the Act.

Construction means fabrication, erection, or installation of a unit or any portion of a unit.

Consumer Price Index or CPI means, for purposes of the Acid Rain Program, the U.S. Department of Labor, Bureau of Labor Statistics unadjusted Consumer Price Index for All Urban Consumers for the U.S. city average, for All Items on the latest reference base, or if such index is no longer published, such other index as the Administrator in his or her discretion determines meets the requirements of the Clean Air Act Amendments of 1990.

(1) *CPI (1990)* means the CPI for all urban consumers for the month of August 1989. The ''CPI (1990)'' is 124.6 (with 1982–1984=100). Beginning in the month for which a new reference base is established, ''CPI (1990)'' will be the CPI value for August 1989 on the new reference base.

(2) *CPI (year)* means the CPI for all urban consumers for the month of August of the previous year.

Continuous emission monitoring system or *CEMS* means the equipment required by part 75 of this chapter used to sample, analyze, measure, and provide, by means of readings recorded at least once every 15 minutes (using an automated data acquisition and handling system (DAHS)), a permanent record of SO_2, NO_X, Hg, or CO_2 emissions or stack gas volumetric flow rate. The following are the principal types of continuous emission monitoring systems required under part 75 of this chapter. Sections 75.10 through 75.18, § 75.71(a) and 75.81 of this chapter indicate which type(s) of CEMS is required for specific applications:

(1) A sulfur dioxide monitoring system, consisting of an SO_2 pollutant concentration monitor and an automated DAHS. An SO_2 monitoring system provides a permanent, continuous record of SO_2 emissions in units of parts per million (ppm);

(2) A flow monitoring system, consisting of a stack flow rate monitor and an automated DAHS. A flow monitoring system provides a permanent,

continuous record of stack gas volumetric flow rate, in units of standard cubic feet per hour (scfh);

(3) A nitrogen oxides (NO_X) emission rate (or NO_X-diluent) monitoring system, consisting of a NO_X pollutant concentration monitor, a diluent gas (CO_2 or O_2) monitor, and an automated DAHS. A NO_X-diluent monitoring system provides a permanent, continuous record of: NO_X concentration in units of parts per million (ppm), diluent gas concentration in units of percent O_2 or CO_2 (% O_2 or CO_2), and NO_X emission rate in units of pounds per million British thermal units (lb/mmBtu);

(4) A nitrogen oxides concentration monitoring system, consisting of a NO_X pollutant concentration monitor and an automated DAHS. A NO_X concentration monitoring system provides a permanent, continuous record of NO_X emissions in units of parts per million (ppm). This type of CEMS is used only in conjunction with a flow monitoring system to determine NO_X mass emissions (in lb/hr) under subpart H of part 75 of this chapter;

(5) A carbon dioxide monitoring system, consisting of a CO_2 pollutant concentration monitor (or an oxygen monitor plus suitable mathematical equations from which the CO_2 concentration is derived) and the automated DAHS. A carbon dioxide monitoring system provides a permanent, continuous record of CO_2 emissions in units of percent CO_2 (% CO_2); and

(6) A moisture monitoring system, as defined in § 75.11(b)(2) of this chapter. A moisture monitoring system provides a permanent, continuous record of the stack gas moisture content, in units of percent H_2O (% H_2O)

(7) A Hg concentration monitoring system, consisting of a Hg pollutant concentration monitor and an automated DAHS. A Hg concentration monitoring system provides a permanent, continuous record of Hg emissions in units of micrograms per standard cubic meter (μgm/scm).

Continuous opacity monitoring system or COMS means the equipment required by part 75 of this chapter to sample, measure, analyze, and provide, with readings taken at least once every 6 minutes, a permanent record of opacity or transmittance. The following components are included in a continuous opacity monitoring system:

(1) Opacity monitor; and

(2) An automated data acquisition and handling system.

Control unit means a unit employing a qualifying Phase I technology in accordance with a Phase I extension plan under § 72.42.

Customer means a purchaser of electricity not for the purposes of retransmission or resale. For generating rural electrical cooperatives, the customers of the distribution cooperatives served by the generating cooperative will be considered customers of the generating cooperative.

Decisional body means any EPA employee who is or may reasonably be expected to act in a decision-making role in a proceeding under part 78 of this chapter, including the Administrator, a member of the Environmental Appeals Board, and a Presiding Officer, and any staff of any such person who are participating in the decisional process.

Demand-side measure means a measure:

(1) To improve the efficiency of consumption of electricity from a utility by customers of the utility; or

(2) To reduce the amount of consumption of electricity from a utility by customers of the utility without increasing the use by the customer of fuel other than: Biomass (*i.e.*, combustible energy-producing materials from biological sources, which include wood, plant residues, biological wastes, landfill gas, energy crops, and eligible components of municipal solid waste), solar, geothermal, or wind resources; or industrial waste gases where the party making the submission involved certifies that there is no net increase in sulfur dioxide emissions from the use of such gases. ''Demand-side measure'' includes the measures listed in part 73, appendix A, section 1 of this chapter.

Designated representative means a responsible natural person authorized by the owners and operators of an affected source and of all affected units at the source or by the owners and operators of a combustion source or process source, as evidenced by a certificate of representation submitted in accordance with subpart B of this part, to

represent and legally bind each owner and operator, as a matter of Federal law, in matters pertaining to the Acid Rain Program. Whenever the term ''responsible official'' is used in part 70 of this chapter, in any other regulations implementing title V of the Act, or in a State operating permit program, it shall be deemed to refer to the ''designated representative'' with regard to all matters under the Acid Rain Program.

Desulfurization refers to various procedures whereby sulfur is removed from petroleum during or apart from the refining process. ''Desulfurization'' does not include such processes as dilution or blending of low sulfur content diesel fuel with high sulfur content diesel fuel from a diesel refinery not eligible under 40 CFR part 73, subpart G.

Diesel-fired unit means, for the purposes of part 75 of this chapter, an oil-fired unit that combusts diesel fuel as its fuel oil, where the supplementary fuel, if any, shall be limited to natural gas or gaseous fuels containing no more sulfur than natural gas.

Diesel fuel means a low sulfur fuel oil of grades 1–D or 2–D, as defined by the American Society for Testing and Materials standard ASTM D975–91, ''Standard Specification for Diesel Fuel Oils,'' grades 1–GT or 2–GT, as defined by ASTM D2880–90a, ''Standard Specification for Gas Turbine Fuel Oils,'' or grades 1 or 2, as defined by ASTM D396–90a, ''Standard Specification for Fuel Oils'' (incorporated by reference in § 72.13).

Diesel reciprocating engine unit means an internal combustion engine that combusts only diesel fuel and that thereby generates electricity through the operation of pistons, rather than by heating steam or water.

Diluent cap value means a default value of percent CO_2 or O_2 which may be used to calculate the hourly NO_X emission rate, when the measured hourly average percent CO_2 is below the default value or when the measured hourly average percent O_2 is above the default value. The diluent cap values for boilers are 5.0 percent CO_2 and 14.0 percent O_2. For combustion turbines, the diluent cap values are 1.0 percent CO_2 and 19.0 percent O_2.

Diluent gas means a major gaseous constituent in a gaseous pollutant mixture, which in the case of emissions from fossil fuel-fired units are carbon dioxide and oxygen.

Diluent gas monitor means that component of the continuous emission monitoring system that measures the diluent gas concentration in a unit's flue gas.

Direct public utility ownership means direct ownership of equipment and facilities by one or more corporations, the principal business of which is sale of electricity to the public at retail. Percentage ownership of such equipment and facilities shall be measured on the basis of book value.

Dispatch means the assignment within a dispatch system of generating levels to specific units and generators to effect the reliable and economical supply of electricity, as customer demand rises or falls, and includes:

(1) The operation of high-voltage lines, substations, and related equipment; and

(2) The scheduling of generation for the purpose of supplying electricity to other utilities over interconnecting transmission lines.

Draft Acid Rain permit or draft permit means the version of the Acid Rain permit, or the Acid Rain portion of an operating permit, that a permitting authority offers for public comment.

Dual-fuel reciprocating engine unit means an internal combustion engine that combusts any combination of natural gas and diesel fuel and that thereby generates electricity through the operation of pistons, rather than by heating steam or water.

Eligible Indian tribe means any eligible Indian tribe as defined in part 71 of this chapter.

Emergency fuel means either:

(1) For purposes of the requirements for a fuel flowmeter used in an excepted monitoring system under appendix D or E of part 75 of this chapter, the fuel identified by the designated representative in the unit's monitoring plan as the fuel which is combusted only during emergencies where the primary fuel is not available; or

(2) For purposes of the requirement for stack testing for an excepted monitoring system under appendix E of part

75 of this chapter, the fuel identified in a federally-enforceable permit for a plant and identified by the designated representative in the unit's monitoring plan as the fuel which is combusted only during emergencies where the primary fuel is not available.

Emissions means air pollutants exhausted from a unit or source into the atmosphere, as measured, recorded, and reported to the Administrator by the designated representative and as determined by the Administrator, in accordance with the emissions monitoring requirements of part 75 of this chapter.

Environmental Appeals Board means the three-member board established pursuant to § 1.25(e) of this chapter and authorized to hear appeals pursuant to part 78 of this chapter.

EPA means the United States Environmental Protection Agency.

EPA protocol gas means a calibration gas mixture prepared and analyzed according to section 2 of the ''EPA Traceability Protocol for Assay and Certification of Gaseous Calibration Standards,'' September 1997, EPA–600/R–97/121 or such revised procedure as approved by the Administrator. On and after January 1, 2009, vendors advertising certification with the EPA Traceability Protocol *or* distributing gases as ''EPA Protocol Gas'' must participate in the EPA Protocol Gas Verification Program. Non-participating vendors may not use ''EPA'' in any form of advertising for these products, unless approved by the Administrator.

EPA Protocol Gas Verification Program means the EPA Protocol Gas audit program described in Section 2.1.10 of the ''EPA Traceability Protocol for Assay and Certification of Gaseous Calibration Standards,'' September 1997, EPA–600/R–97/121 (EPA Protocol Procedure) or such revised procedure as approved by the Administrator.

EPA trial staff means an employee of EPA, whether temporary or permanent, who has been designated by the Administrator to investigate, litigate, and present evidence, arguments, and positions of EPA in any evidentiary hearing under part 78 of this chapter. Any EPA or permitting authority employee, consultant, or contractor who is called as a witness in the evidentiary hearing by EPA trial staff shall be deemed to be ''EPA trial staff''.

Equivalent diameter means a value, calculated using the Equation 1–1 in section 12.2 of Method 1 in part 60, appendix A of this chapter, and used to determine the upstream and downstream distances for locating CEMS or CEMS components in flues or stacks with rectangular cross sections.

Ex parte communication means any communication, written or oral, relating to the merits of an adjudicatory proceeding under part 78 of this chapter, that was not originally included or stated in the administrative record, in a pleading, or in an evidentiary hearing or oral argument under part 78 of this chapter, between the decisional body and any interested person outside EPA or any EPA trial staff. *Ex parte* communication shall not include:

(1) Communication between EPA employees other than between EPA trial staff and a member of the decisional body; or

(2) Communication between the decisional body and interested persons outside the Agency, or EPA trial staff, where all parties to the proceeding have received prior written notice of the proposed communication and are given an opportunity to be present and to participate therein.

Excepted monitoring system means a monitoring system that follows the procedures and requirements of § 75.15 of this chapter, § 75.19 of this chapter, § 75.81(b) of this chapter or of appendix D, or E to part 75 for approved exceptions to the use of continuous emission monitoring systems.

Excess emissions means:

(1) Any tonnage of sulfur dioxide emitted by the affected units at an affected source during a calendar year that exceeds the Acid Rain emissions limitation for sulfur dioxide for the source; and

(2) Any tonnage of nitrogen oxide emitted by an affected unit during a calendar year that exceeds the annual tonnage equivalent of the Acid Rain emissions limitation for nitrogen oxides applicable to the affected unit taking into account the unit's heat input for the year.

Existing unit means a unit (including a unit subject to section 111 of the Act) that commenced commercial operation before November 15, 1990 and that on or after November 15, 1990 served a generator with nameplate capacity of greater than 25 MWe. ''Existing unit'' does not include simple combustion turbines or any unit that on or after November 15, 1990 served only generators with a nameplate capacity of 25 MWe or less. Any ''existing unit'' that is modified, reconstructed, or repowered after November 15, 1990 shall continue to be an ''existing unit.''

Facility means any institutional, commercial, or industrial structure, installation, plant, source, or building.

File means to send or transmit a document, information, or correspondence to the official custody of the person specified to take possession in accordance with the applicable regulation. Compliance with any ''filing'' deadline shall be determined by the date that person receives the document, information, or correspondence.

Flow meter accuracy means the closeness of the measurement made by a flow meter to the reference value of the fuel flow being measured, expressed as the difference between the measurement and the reference value.

Flow monitor means a component of the continuous emission monitoring system that measures the volumetric flow of exhaust gas.

Flue means a conduit or duct through which gases or other matter are exhausted to the atmosphere.

Flue gas desulfurization system means a type of add-on emission control used to remove sulfur dioxide from flue gas, commonly referred to as a ''scrubber.''

Forced outage means the removal of a unit from service due to an unplanned component failure or other unplanned condition that requires such removal immediately or within 7 days from the onset of the unplanned component failure or condition. For purposes of §§ 72.43, 72.91, and 72.92, ''forced outage'' also includes a partial reduction in the heat input or electrical output due to an unplanned component failure or other unplanned condition that requires such reduction immediately or within 7 days from the onset of the unplanned component failure or condition.

Fossil fuel means natural gas, petroleum, coal, or any form of solid, liquid, or gaseous fuel derived from such material.

Fossil fuel-fired means the combustion of fossil fuel or any derivative of fossil fuel, alone or in combination with any other fuel, independent of the percentage of fossil fuel consumed in any calendar year (expressed in mmBtu).

Fuel flowmeter QA operating quarter means a unit operating quarter in which the unit combusts the fuel measured by the fuel flowmeter for at least 168 unit operating hours (as defined in this section).

Fuel flowmeter system means an excepted monitoring system (as defined in this section) which provides a continuous record of the flow rate of fuel oil or gaseous fuel, in accordance with appendix D to part 75 of this chapter. A fuel flowmeter system consists of one or more fuel flowmeter components, all necessary auxiliary components (e.g., transmitters, transducers, etc.), and a data acquisition and handling system (DAHS).

Fuel oil means any petroleum-based fuel (including diesel fuel or petroleum derivatives such as oil tar) as defined by the American Society for Testing and Materials in ASTM D396–90a, ''Standard Specification for Fuel Oils'' (incorporated by reference in § 72.13), and any recycled or blended petroleum products or petroleum by-products used as a fuel whether in a liquid, solid or gaseous state; *provided* that for purposes of the monitoring requirements of part 75 of this chapter, ''fuel oil'' shall be limited to the petroleum-based fuels for which applicable ASTM methods are specified in Appendices D, E, or F of part 75 of this chapter.

Fuel supply agreement means a legally binding agreement between a new IPP or a firm associated with a new IPP and a fuel supplier that establishes the terms and conditions under which the fuel supplier commits to provide fuel to be delivered to the new IPP.

Fuel usage time means the portion of a clock hour during which a unit combusts a particular type of fuel. The fuel usage time, in hours, is expressed as a

decimal fraction, with valid values ranging from 0.00 to 1.00.

Gas-fired means:

(1) For all purposes under the Acid Rain Program, except for part 75 of this chapter, the combustion of:

(i) Natural gas or other gaseous fuel (including coal-derived gaseous fuel), for at least 90.0 percent of the unit's average annual heat input during the previous three calendar years and for at least 85.0 percent of the annual heat input in each of those calendar years; and

(ii) Any fuel, except coal or solid or liquid coal-derived fuel, for the remaining heat input, if any.

(2) For purposes of part 75 of this chapter, the combustion of:

(i) Natural gas or other gaseous fuel (including coal-derived gaseous fuel) for at least 90.0 percent of the unit's average annual heat input during the previous three calendar years and for at least 85.0 percent of the annual heat input in each of those calendar years; and

(ii) Fuel oil, for the remaining heat input, if any.

(3) For purposes of part 75 of this chapter, a unit may initially qualify as gas-fired if the designated representative demonstrates to the satisfaction of the Administrator that the requirements of paragraph (2) of this definition are met, or will in the future be met, through one of the following submissions:

(i) For a unit for which a monitoring plan has not been submitted under § 75.62 of this chapter, the designated representative submits either:

(A) Fuel usage data for the unit for the three calendar years immediately preceding the date of initial submission of the monitoring plan for the unit under § 75.62; or

(B) If a unit does not have fuel usage data for one or more of the three calendar years immediately preceding the date of initial submission of the monitoring plan for the unit under § 75.62, the unit's designated fuel usage; all available fuel usage data (including the percentage of the unit's heat input derived from the combustion of gaseous fuels), beginning with the date on which the unit commenced commercial operation; and the unit's projected fuel usage.

(ii) For a unit for which a monitoring plan has already been submitted under § 75.62, that has not qualified as gas-fired under paragraph (3)(i) of this definition, and whose fuel usage changes, the designated representative submits either:

(A) Three calendar years of data following the change in the unit's fuel usage, showing that no less than 90.0 percent of the unit's average annual heat input during the previous three calendar years, and no less than 85.0 percent of the unit's annual heat input during any one of the previous three calendar years, is from the combustion of gaseous fuels and the remaining heat input is from the combustion of fuel oil; or

(B) A minimum of 720 hours of unit operating data following the change in the unit's fuel usage, showing that no less than 90.0 percent of the unit's heat input is from the combustion of gaseous fuels and the remaining heat input is from the combustion of fuel oil, and a statement that this changed pattern of fuel usage is considered permanent and is projected to continue for the foreseeable future.

(iii) If a unit qualifies as gas-fired under paragraph (3)(i) or (ii) of this definition, the unit is classified as gas-fired as of the date of the submission under such paragraph.

(4) For purposes of part 75 of this chapter, a unit that initially qualifies as gas-fired under paragraph (3)(i) or (ii) of this definition must meet the criteria in paragraph (2) of this definition each year in order to continue to qualify as gas-fired. If such a unit combusts only gaseous fuel and fuel oil but fails to meet such criteria for a given year, the unit no longer qualifies as gas-fired starting January 1 of the year after the first year for which the criteria are not met. If such a unit combusts fuel other than gaseous fuel or fuel oil and fails to meet such criteria in a given year, the unit no longer qualifies as gas-fired starting the day after the first day for which the criteria are not met. If a unit failing to meet the criteria in paragraph (2) of this definition initially qualified as a gas-fired unit under paragraph (3) of

this definition, the unit may qualify as a gas-fired unit for a subsequent year only if the designated representative submits the data specified in paragraph (3)(ii)(A) of this definition.

Gas manufacturer's intermediate standard (GMIS) means a compressed gas calibration standard that has been assayed and certified by direct comparison to a standard reference material (SRM), an SRM-equivalent PRM, a NIST/EPA-approved certified reference material (CRM), or a NIST traceable reference material (NTRM), in accordance with section 2.1.2.1 of the ''EPA Traceability Protocol for Assay and Certification of Gaseous Calibration Standards,'' September 1997, EPA–600/R–97/121.

Gaseous fuel means a material that is in the gaseous state at standard atmospheric temperature and pressure conditions and that is combusted to produce heat.

General account means an Allowance Tracking System account that is not a compliance account.

Generator means a device that produces electricity and was or would have been required to be reported as a generating unit pursuant to the United States Department of Energy Form 860 (1990 edition).

Generator Output capacity means the full-load continuous rating of a generator under specific conditions as designed by the manufacturer.

Hearing clerk means an EPA employee designated by the Administrator to establish a repository for all books, records, documents, and other materials relating to proceedings under part 78 of this chapter.

Heat input rate means the product (expressed in mmBtu/hr) of the gross calorific value of the fuel (expressed in mmBtu/mass of fuel) and the fuel feed rate into the combustion device (expressed in mass of fuel/hr) and does not include the heat derived from preheated combustion air, recirculated flue gases, or exhaust from other sources.

Hour before and *hour after* means, for purposes of the missing data substitution procedures of part 75 of this chapter, the quality-assured hourly SO_2 or CO_2 concentration, hourly flow rate, hourly NO_X concentration, hourly moisture, hourly O_2 concentration, or hourly NO_X emission rate (as applicable) recorded by a certified monitor during the unit or stack operating hour immediately before and the unit or stack operating hour immediately after a missing data period.

Hybrid generation facility means a plant that generates electrical energy derived from a combination of qualified renewable energy (wind, solar, biomass, or geothermal) and one or more other energy resources.

Independent auditor means a professional engineer who is not an employee or agent of the source being audited.

Independent Power Production Facility (IPP) means a source that:

(1) Is nonrecourse project financed, as defined by the Secretary of Energy at 10 CFR part 715;

(2) Is used for the generation of electricity, eighty percent or more of which is sold at wholesale; and

(3) Is a new unit required to hold allowances under Title IV of the Clean Air Act; but only if direct public utility ownership of the equipment comprising the facility does not exceed 50 percent.

Interested person means any person who submitted written comments or testified at a public hearing on the draft permit or other matter subject to notice and comment under the Acid Rain Program or any person who submitted his or her name to the Administrator or the permitting authority, as appropriate, to be placed on a list of persons interested in such matter. The Administrator or the permitting authority may update the list of interested persons from time to time by requesting additional written indication of continued interest from the persons listed and may delete from the list the name of any person failing to respond as requested.

Investor-owned utility means a utility that is organized as a tax-paying for-profit business.

Kilowatthour saved or *savings* means the net savings in electricity use (expressed in Kwh) that result directly from a utility's energy conservation measures or programs.

Least-cost plan or *least-cost planning process* means an energy conservation

and electric power planning methodology meeting the requirements of § 73.82(a)(4) of this chapter.

Life-of-the-unit, firm power contractual arrangement means a unit participation power sales agreement under which a utility or industrial customer reserves, or is entitled to receive, a specified amount or percentage of nameplate capacity and associated energy generated by any specified generating unit and pays its proportional amount of such unit's total costs, pursuant to a contract:

(1) For the life of the unit;

(2) For a cumulative term of no less than 30 years, including contracts that permit an election for early termination; or

(3) For a period equal to or greater than 25 years or 70 percent of the economic useful life of the unit determined as of the time the unit was built, with option rights to purchase or release some portion of the nameplate capacity and associated energy generated by the unit at the end of the period.

Long-term cold storage means the complete shutdown of a unit intended to last for an extended period of time (at least two calendar years) where notice for long-term cold storage is provided under § 75.61(a)(7).

Low mass emissions unit means an affected unit that is ''gas-fired'' or ''oil-fired'' (as defined in this section), and that qualifies to use the low mass emissions excepted methodology in § 75.19 of this chapter.

Mail or serve by mail means to submit or serve by means other than personal service.

Maximum potential hourly heat input means an hourly heat input used for reporting purposes when a unit lacks certified monitors to report heat input. If the unit intends to use appendix D of part 75 of this chapter to report heat input, this value should be calculated, in accordance with part 75 of this chapter, using the maximum fuel flow rate and the maximum gross calorific value. If the unit intends to use a flow monitor and a diluent gas monitor, this value should be reported, in accordance with part 75 of this chapter, using the maximum potential flow rate and either the maximum carbon dioxide concentration (in percent CO_2) or the minimum oxygen concentration (in percent O_2).

Maximum potential NO_X emission rate or MER means the emission rate of nitrogen oxides (in lb/mmBtu) calculated in accordance with section 3 of appendix F to part 75 of this chapter, using the maximum potential nitrogen oxides concentration (MPC), as defined in section 2.1.2.1 of appendix A to part 75 of this chapter, and either the maximum oxygen concentration (in percent O_2) or the minimum carbon dioxide concentration (in percent CO_2) under all operating conditions of the unit except for unit start-up, shutdown, and upsets. The diluent cap value, as defined in this section, may be used in lieu of the maximum O_2 or minimum CO_2 concentration to calculate the MER. As a second alternative, when the NO_X MPC is determined from emission test results or from historical CEM data, as described in section 2.1.2.1 of appendix A to part 75 of this chapter, quality-assured diluent gas (*i.e.*, O_2 or CO_2) data recorded concurrently with the MPC may be used to calculate the MER. For the purposes of §§ 75.4(f), 75.19(b)(3), and 75.33(c)(7) in part 75 of this chapter and section 2.5 in appendix E to part 75 of this chapter, the MER is specific to the type of fuel combusted in the unit.

Maximum rated hourly heat input rate means a unit-specific maximum hourly heat input rate (mmBtu/hr) which is the higher of the manufacturer's maximum rated hourly heat input rate or the highest observed hourly heat input rate.

Missing data period means the total number of consecutive hours during which any certified CEMS or approved alternative monitoring system is not providing quality-assured data, regardless of the reason.

Monitor accuracy means the closeness of the measurement made by a CEMS to the reference value of the emissions or volumetric flow being measured, expressed as the difference between the measurement and the reference value.

Monitor operating hour means any unit operating hour or portion thereof over which a CEMS, or other monitoring system approved by the Administrator under part 75 of this chapter is

operating, regardless of the number of measurements (*i.e.*, data points) collected during the hour or portion of an hour.

Most stringent federally enforceable emissions limitation means the most stringent emissions limitation for a given pollutant applicable to the unit, which has been approved by the Administrator under the Act, whether in a State implementation plan approved pursuant to title I of the Act, a new source performance standard, or otherwise. To determine the most stringent emissions limitation for sulfur dioxide, each limitation shall be converted to lbs/mmBtu, using the appropriate conversion factors in appendix B of this part; *provided* that for determining the most stringent emissions limitation for sulfur dioxide for 1985, each limitation shall also be annualized, using the appropriate annualization factors in appendix A of this part.

Multi-header generator means a generator served by ductwork from more than one unit.

Multi-header unit means a unit with ductwork serving more than one generator.

Multiple stack configuration refers to an exhaust configuration in which the flue gases from a particular unit discharge to the atmosphere through two or more stacks. The term also refers to a unit for which emissions are monitored in two or more ducts leading to the exhaust stack, in lieu of monitoring at the stack.

Nameplate capacity means the maximum electrical generating output (expressed in MWe) that a generator can sustain over a specified period of time when not restricted by seasonal or other deratings, as listed in the NADB under the data field ''NAMECAP'' if the generator is listed in the NADB or as measured in accordance with the United States Department of Energy standards if the generator is not listed in the NADB.

National Allowance Data Base or *NADB* means the data base established by the Administrator under section 402(4)(C) of the Act.

Natural gas means a naturally occurring fluid mixture of hydrocarbons (e.g., methane, ethane, or propane) produced in geological formations beneath the Earth's surface that maintains a gaseous state at standard atmospheric temperature and pressure under ordinary conditions. Natural gas contains 20.0 grains or less of total sulfur per 100 standard cubic feet. Additionally, natural gas must either be composed of at least 70 percent methane by volume or have a gross calorific value between 950 and 1100 Btu per standard cubic foot. Natural gas does not include the following gaseous fuels: landfill gas, digester gas, refinery gas, sour gas, blast furnace gas, coal-derived gas, producer gas, coke oven gas, or any gaseous fuel produced in a process which might result in highly variable sulfur content or heating value.

NERC region means the North American Electric Reliability Council region or, if any, subregion.

Net income neutrality means, in the case of energy conservation measures undertaken by an investor-owned utility whose rates are regulated by a State utility regulatory authority, rates and charges established by the State utility regulatory authority that ensure that the net income earned by the utility on its State-jurisdictional equity investment will be *no lower* as a consequence of its expenditures on cost-effective qualified energy conservation measures and any associated lost sales than it would have been had the utility not made such expenditures, or that the State utility regulatory authority has implemented a ratemaking approach designed to meet this objective.

New independent power production facility or *new IPP* means a unit that:

(1) Commences commercial operation on or after November 15, 1990;

(2) Is nonrecourse project-financed, as defined in 10 CFR part 715;

(3) Sells 80% of electricity generated at wholesale; and

(4) Does not sell electricity to any affiliate or, if it does, demonstrates it cannot obtain the required allowances from such an affiliate.

New unit means a unit that commences commercial operation on or after November 15, 1990, including any such unit that serves a generator with a nameplate capacity of 25 MWe or less or that is a simple combustion turbine.

Ninetieth (90th) percentile means a value that would divide an ordered set of increasing values so that at least 90 percent are less than or equal to the value and at least 10 percent are greater than or equal to the value.

Ninety-fifth (95th) percentile means a value that would divide an ordered set of increasing values so that at least 95 percent of the set are less than or equal to the value and at least 5 percent are greater than or equal to the value.

NIST/EPA-approved certified reference material or NIST/EPA-approved CRM means a calibration gas mixture that has been approved by EPA and the National Institutes of Standards and Technologies (NIST) as having specific known chemical or physical property values certified by a technically valid procedure as evidenced by a certificate or other documentation issued by a certifying standard-setting body.

NIST traceable elemental Hg standards means either:

(1) Compressed gas cylinders having known concentrations of elemental Hg, which have been prepared according to the ''EPA Traceability Protocol for Assay and Certification of Gaseous Calibration Standards''; or

(2) Calibration gases having known concentrations of elemental Hg, produced by a generator that fully meets the performance requirements of the ''EPA Traceability Protocol for Qualification and Certification of Elemental Mercury Gas Generators''.

NIST traceable reference material (NTRM) means a calibration gas mixture tested by and certified by the National Institutes of Standards and Technologies (NIST) to have a certain specified concentration of gases. NTRMs may have different concentrations from those of standard reference materials.

NIST traceable source of oxidized Hg means a generator that: Is capable of providing known concentrations of vapor phase mercuric chloride ($HgCl_2$), and that fully meets the performance requirements of the ''EPA Traceability Protocol for Qualification and Certification of Oxidized Mercury Gas Generators''.

Offset plan means a plan pursuant to part 77 of this chapter for offsetting excess emissions of sulfur dioxide that have occurred at an affected source in any calendar year.

Oil-fired means:

(1) For all purposes under the Acid Rain Program, except part 75 of this chapter, the combustion of:

(i) Fuel oil for more than 10.0 percent of the average annual heat input during the previous three calendar years or for more than 15.0 percent of the annual heat input during any one of those calendar years; and

(ii) Any solid, liquid or gaseous fuel (including coal-derived gaseous fuel), other than coal or any other coal-derived solid or liquid fuel, for the remaining heat input, if any.

(2) For purposes of part 75 of this chapter, combustion of only fuel oil and gaseous fuels, provided that the unit involved does not meet the definition of gas-fired.

Opacity means the degree to which emissions reduce the transmission of light and obscure the view of an object in the background.

Operating when referring to a combustion or process source seeking entry into the Opt-in Program, means that the source had documented consumption of fuel input for more than 876 hours in the 6 months immediately preceding the submission of a combustion source's opt-in application under § 74.16(a) of this chapter.

Operating permit means a permit issued under part 70 of this chapter and any other regulations implementing title V of the Act.

Opt in or opt into means to elect to become an affected unit under the Acid Rain Program through the issuance of the final effective opt-in permit under § 74.14 of this chapter.

Opt-in permit means the legally binding written document that is contained within the Acid Rain permit and sets forth the requirements under part 74 of this chapter for a combustion source or a process source that opts into the Acid Rain Program.

Opt-in source means a combustion source or process source that has elected to become an affected unit under the Acid Rain Program and whose opt-in permit has been issued and is in effect.

Out-of-control period means any period:

(1) Beginning with the hour corresponding to the completion of a daily calibration error, linearity check, or quality assurance audit that indicates that the instrument is not measuring and recording within the applicable performance specifications; and

(2) Ending with the hour corresponding to the completion of an additional calibration error, linearity check, or quality assurance audit following corrective action that demonstrates that the instrument is measuring and recording within the applicable performance specifications.

Oversubscription payment deadline means 30 calendar days prior to the allowance transfer deadline.

Owner means any of the following persons:

(1) Any holder of any portion of the legal or equitable title in an affected unit or in a combustion source or process source; or

(2) Any holder of a leasehold interest in an affected unit or in a combustion source or process source; or

(3) Any purchaser of power from an affected unit or from a combustion source or process source under a life-of-the-unit, firm power contractual arrangement as the term is defined herein and used in section 408(i) of the Act. However, unless expressly provided for in a leasehold agreement, owner shall not include a passive lessor, or a person who has an equitable interest through such lessor, whose rental payments are not based, either directly or indirectly, upon the revenues or income from the affected unit; or

(4) With respect to any Allowance Tracking System general account, any person identified in the submission required by § 73.31(c) of this chapter that is subject to the binding agreement for the authorized account representative to represent that person's ownership interest with respect to allowances.

Owner or operator means any person who is an owner or who operates, controls, or supervises an affected unit, affected source, combustion source, or process source and shall include, but not be limited to, any holding company, utility system, or plant manager of an affected unit, affected source, combustion source, or process source.

Ozone nonattainment area means an area designated as a nonattainment area for ozone under subpart C of part 81 of this chapter.

Ozone season means the period of time beginning May 1 of a year and ending on September 30 of the same year, inclusive.

Ozone transport region means the ozone transport region designated under Section 184 of the Act.

Peaking unit means:

(1) A unit that has:

(i) An average capacity factor of no more than 10.0 percent during the previous three calendar years and

(ii) A capacity factor of no more than 20.0 percent in each of those calendar years.

(2) For purposes of part 75 of this chapter, a unit may initially qualify as a peaking unit if the designated representative demonstrates to the satisfaction of the Administrator that the requirements of paragraph (1) of this definition are met, or will in the future be met, through one of the following submissions:

(i) For a unit for which a monitoring plan has not been submitted under § 75.62, the designated representative submits either:

(A) Capacity factor data for the unit for the three calendar years immediately preceding the date of initial submission of the monitoring plan for the unit under § 75.62; or

(B) If a unit does not have capacity factor data for one or more of the three calendar years immediately preceding the date of initial submission of the monitoring plan for the unit under § 75.62, all available capacity factor data, beginning with the date on which the unit commenced commercial operation; and projected capacity factor data.

(ii) For a unit for which a monitoring plan has already been submitted under § 75.62, that has not qualified as a peaking unit under paragraph (2)(i) of this definition, and where capacity factor changes, the designated representative submits either:

(A) Three calendar years of data following the change in the unit's capacity factor showing an average capacity factor of no more than 10.0 percent during the three previous calendar years

and a capacity factor of no more than 20.0 percent in each of those calendar years; or

(B) One calendar year of data following the change in the unit's capacity factor showing a capacity factor of no more than 10.0 percent and a statement that this changed pattern of operation resulting in a capacity factor less than 10.0 percent is considered permanent and is projected to continue for the foreseeable future.

(3) For purposes of part 75 of this chapter, a unit that initially qualifies as a peaking unit must meet the criteria in paragraph (1) of this definition each year in order to continue to qualify as a peaking unit. If such a unit fails to meet such criteria for a given year, the unit no longer qualifies as a peaking unit starting January 1 of the year after the year for which the criteria are not met. If a unit failing to meet the criteria in paragraph (1) of this definition initially qualified as a peaking unit under paragraph (2) of this definition, the unit may qualify as a peaking unit for a subsequent year only if the designated representative submits the data specified in paragraph (2)(ii)(A) of this definition.

(4) A unit required to comply with the provisions of subpart H of part 75 of this chapter, under a State or Federal NO_X mass emissions reduction program, may, pursuant to § 75.74(c)(11) in part 75 of this chapter, qualify as a peaking unit on an ozone season basis rather than an annual basis, if the owner or operator reports NO_X mass emissions and heat input data only during the ozone season.

Permit revision means a permit modification, fast track modification, administrative permit amendment, or automatic permit amendment, as provided in subpart H of this part.

Permitting authority means either:

(1) When the Administrator is responsible for administering Acid Rain permits under subpart G of this part, the Administrator or a delegatee agency authorized by the Administrator; or

(2) The State air pollution control agency, local agency, other State agency, or other agency authorized by the Administrator to administer Acid Rain permits under subpart G of this part and part 70 of this chapter.

Person includes an individual, corporation, partnership, association, State, municipality, political subdivision of a State, any agency, department, or instrumentality of the United States, and any officer, agent, or employee thereof.

Phase I means the Acid Rain Program period beginning January 1, 1995 and ending December 31, 1999.

Phase I unit means any affected unit, except an affected unit under part 74 of this chapter, that is subject to an Acid Rain emissions reduction requirement or Acid Rain emissions limitation beginning in Phase I; or any unit exempt under § 72.8 that, but for such exemption, would be subject to an Acid Rain emissions reduction requirement or Acid Rain emissions limitation beginning in Phase I.

Phase II means the Acid Rain Program period beginning January 1, 2000, and continuing into the future thereafter.

Phase II unit means any affected unit, except an affected unit under part 74 of this chapter, that is subject to an Acid Rain emissions reduction requirement or Acid Rain emissions limitation during Phase II only.

Pipeline natural gas means a naturally occurring fluid mixture of hydrocarbons (e.g., methane, ethane, or propane) produced in geological formations beneath the Earth's surface that maintains a gaseous state at standard atmospheric temperature and pressure under ordinary conditions, and which is provided by a supplier through a pipeline. Pipeline natural gas contains 0.5 grains or less of total sulfur per 100 standard cubic feet. Additionally, pipeline natural gas must either be composed of at least 70 percent methane by volume or have a gross calorific value between 950 and 1100 Btu per standard cubic foot.

Pollutant concentration monitor means that component of the continuous emission monitoring system that measures the concentration of a pollutant in a unit's flue gas.

Potential electrical output capacity means the MWe capacity rating for the units which shall be equal to 33 percent of the maximum design heat input capacity of the steam generating unit, as

calculated according to appendix D of part 72.

Power distribution system means the portion of an electricity grid owned or operated by a utility that is dedicated to delivering electric energy to customers.

Power purchase commitment means a commitment or obligation of a utility to purchase electric power from a facility pursuant to:

(1) A power sales agreement;

(2) A state regulatory authority order requiring a utility to:

(i) Enter into a power sales agreement with the facility;

(ii) Purchase from the facility; or

(iii) Enter into arbitration concerning the facility for the purpose of establishing terms and conditions of the utility's purchase of power;

(3) A letter of intent or similar instrument committing to purchase power (actual electrical output or generator output capacity) from the source at a previously offered or lower price and a power sales agreement applicable to the source is executed within the time frame established by the terms of the letter of intent but no later than November 15, 1993 or, where the letter of intent does not specify a time frame, a power sale agreement applicable to the source is executed on or before November 15, 1993; or

(4) A utility competitive bid solicitation that has resulted in the selection of the qualifying facility or independent power production facility as the winning bidder.

Power sales agreement is a legally binding agreement between a QF, IPP, new IPP, or firm associated with such facility and a regulated electric utility that establishes the terms and conditions for the sale of power from the facility to the utility.

Presiding Officer means an Administrative Law Judge appointed under 5 U.S.C. 3105 and designated to preside at a hearing in an appeal under part 78 of this chapter or an EPA lawyer designated to preside at any such hearing under § 78.6(b)(3)(ii) of this chapter.

Primary fuel or primary fuel supply means the main fuel type (expressed in mmBtu) consumed by an affected unit for the applicable calendar year.

Probationary calibration error test means an on-line calibration error test performed in accordance with section 2.1.1 of appendix B to part 75 of this chapter that is used to initiate a conditionally valid data period.

Proposed Acid Rain permit or proposed permit means, in the case of a State operating permit program, the version of an Acid Rain permit that the permitting authority submits to the Administrator after the public comment period, but prior to completion of the EPA permit review period, as provided for in part 70 of this chapter.

QA operating quarter means a calendar quarter in which there are at least 168 unit operating hours (as defined in this section) or, for a common stack or bypass stack, a calendar quarter in which there are at least 168 stack operating hours (as defined in this section).

Qualified Individual means an individual who meets the requirements as described in ASTM D7036–04, ''Standard Practice for Competence of Air Emission Testing Bodies'' (incorporated by reference under § 75.6 of this part).

Qualifying facility (QF) means a ''qualifying small power production facility'' within the meaning of section 3(17)(C) of the Federal Power Act or a ''qualifying cogeneration facility'' within the meaning of section 3(18)(B) of the Federal Power Act.

Qualifying Phase I technology means a technological system of continuous emission reduction that is demonstrated to achieve a ninety (90) percent (or greater) reduction in emissions of sulfur dioxide from the emissions that would have resulted from the use of fossil fuels that were not subject to treatment prior to combustion, as provided in § 72.42.

Qualifying power purchase commitment means a power purchase commitment in effect as of November 15, 1990 without regard to changes to that commitment so long as:

(1) The identity of the electric output purchaser; or

(2) The identity of the steam purchaser and the location of the facility, remain unchanged as of the date the facility commences commercial operation; and

(3) The terms and conditions of the power purchase commitment are not changed in such a way as to allow the costs of compliance with the Acid Rain Program to be shifted to the purchaser.

Qualifying repowering technology means:

(1) Replacement of an existing coal-fired boiler with one of the following clean coal technologies: Atmospheric or pressurized fluidized bed combustion, integrated gasification combined cycle, magnetohydrodynamics, direct and indirect coal-fired turbines, integrated gasification fuel cells, or as determined by the Administrator, in consultation with the Secretary of Energy, a derivative of one or more of these technologies, and any other technology capable of controlling multiple combustion emissions simultaneously with improved boiler or generation efficiency and with significantly greater waste reduction relative to the performance of technology in widespread commercial use as of the date of enactment of the Clean Air Act Amendments of 1990; or

(2) Any oil- or gas-fired unit that has been awarded clean coal technology demonstration funding as of January 1, 1991, by the Department of Energy.

Quality-assured monitor operating hour means any unit operating hour or portion thereof over which a certified CEMS, or other monitoring system approved by the Administrator under part 75 of this chapter, is operating:

(1) Within the performance specifications set forth in part 75, appendix A of this chapter and the quality assurance/quality control procedures set forth in part 75, appendix B of this chapter, without unscheduled maintenance, repair, or adjustment; and

(2) In accordance with § 75.10(d), (e), and (f) of this chapter.

Receive or receipt of means the date the Administrator or a permitting authority comes into possession of information or correspondence (whether sent in writing or by authorized electronic transmission), as indicated in an official log, or by a notation made on the information or correspondence, by the Administrator or the permitting authority in the regular course of business.

Recordation, record, or recorded means, with regard to allowances, the transfer of allowances by the Administrator from one Allowance Tracking System account to another.

Reduced utilization means a reduction, during any calendar year in Phase I, in the heat input (expressed in mmBtu for the calendar year) at a Phase I unit below the unit's baseline, where such reduction subjects the unit to the requirement to submit a reduced utilization plan under § 72.43; or, in the case of an opt-in source, means a reduction in the average utilization, as specified in § 74.44 of this chapter, of an opt-in source below the opt-in source's baseline.

Reference method means any direct test method of sampling and analyzing for an air pollutant as specified in part 60, appendix A of this chapter.

Reference value or reference signal means the known concentration of a calibration gas, the known value of an electronic calibration signal, or the known value of any other measurement standard approved by the Administrator, assumed to be the true value for the pollutant or diluent concentration or volumetric flow being measured.

Relative accuracy means a statistic designed to provide a measure of the systematic and random errors associated with data from continuous emission monitoring systems, and is expressed as the absolute mean difference between the pollutant or moisture concentration or volumetric flow measured by the pollutant concentration or flow monitor or moisture monitor and the value determined by the applicable reference method(s) plus the 2.5 percent error confidence coefficient of a series of tests divided by the mean of the reference method tests in accordance with part 75 of this chapter.

Replacement unit means an affected unit replacing the thermal energy provided by an opt-in source, where both the affected unit and the opt-in source are governed by a thermal energy plan.

Research gas mixture (RGM) means a calibration gas mixture developed by agreement of a requestor and NIST that NIST analyzes and certifies as ''NIST traceable.'' RGMs may have concentrations different from those of standard reference materials.

Schedule of compliance means an enforceable sequence of actions, measures, or operations designed to achieve or maintain compliance, or correct non-compliance, with an applicable requirement of the Acid Rain Program, including any applicable Acid Rain permit requirement.

Secretary of Energy means the Secretary of the United States Department of Energy or the Secretary's duly authorized representative.

Serial number means, when referring to allowances, the unique identification number assigned to each allowance by the Administrator, pursuant to § 73.34(d) of this chapter.

Simple combustion turbine means a unit that is a rotary engine driven by a gas under pressure that is created by the combustion of any fuel. This term includes combined cycle units without auxiliary firing. This term excludes combined cycle units with auxiliary firing, unless the unit did not use the auxiliary firing from 1985 through 1987 and does not use auxiliary firing at any time after November 15, 1990.

Site lease, as used in part 73, subpart E of this chapter, means a legally-binding agreement signed between a new IPP or a firm associated with a new IPP and a site owner that establishes the terms and conditions under which the new IPP or the firm associated with the new IPP has the binding right to utilize a specific site for the purposes of operating or constructing the new IPP.

Small diesel refinery means a domestic motor diesel fuel refinery or portion of a refinery that, as an annual average of calendar years 1988 through 1990 and as reported to the Department of Energy on Form 810, had bona fide crude oil throughput less than 18,250,000 barrels per year, and the refinery or portion of a refinery is owned or controlled by a refiner with a total combined bona fide crude oil throughput of less than 50,187,500 barrels per year.

Solid waste incinerator means a source as defined in section 129(g)(1) of the Act.

Sorbent trap monitoring system means the equipment required by part 75 of this chapter for the continuous monitoring of Hg emissions, using paired sorbent traps containing iodated charcoal (IC) or other suitable reagents. This excepted monitoring system consists of a probe, the paired sorbent traps, an umbilical line, moisture removal components, an air tight sample pump, a gas flow meter, and an automated data acquisition and handling system. The monitoring system samples the stack gas at a rate proportional to the stack gas volumetric flowrate. The sampling is a batch process. Using the sample volume measured by the gas flow meter and the results of the analyses of the sorbent traps, the average mercury concentration in the stack gas for the sampling period is determined, in units of micrograms per dry standard cubic meter (μg/dscm). Mercury mass emissions for each hour in the sampling period are calculated using the average Hg concentration for that period, in conjunction with contemporaneous hourly measurements of the stack gas flow rate, corrected for the stack moisture content.

Source means any governmental, institutional, commercial, or industrial structure, installation, plant, building, or facility that emits or has the potential to emit any regulated air pollutant under the Act, provided that one or more combustion or process sources that have, under § 74.4(c) of this chapter, a different designated representative than the designated representative for one or more affected utility units at a source shall be treated as being included in a separate source from the source that includes such utility units for purposes of parts 72 through 78 of this chapter, but shall be treated as being included in the same source as the source that includes such utility units for purposes of section 502(c) of the Act. For purposes of section 502(c) of the Act, a ''source'', including a ''source'' with multiple units, shall be considered a single ''facility.''

Span means the highest pollutant or diluent concentration or flow rate that a monitor component is required to be capable of measuring under part 75 of this chapter.

Specialty gas producer means an organization that prepares and analyzes compressed gas mixtures for use as calibration gases and that offers the mixtures for sale to end users or to

third-party vendors for resale to end users.

Spot allowance means an allowance that may be used for purposes of compliance with a source's Acid Rain sulfur dioxide emissions limitation requirements beginning in the year in which the allowance is offered for sale.

Spot auction means an auction of a spot allowance.

Spot sale means a sale of a spot allowance.

Stack means a structure that includes one or more flues and the housing for the flues.

Stack operating hour means a clock hour during which flue gases flow through a particular stack or duct (either for the entire hour or for part of the hour) while the associated unit(s) are combusting fuel.

Stack operating time means the portion of a clock hour during which flue gases flow through a particular stack or duct while the associated unit(s) are combusting fuel. The stack operating time, in hours, is expressed as a decimal fraction, with valid values ranging from 0.00 to 1.00.

Standard conditions means 68 °F at 1 atm (29.92 in. of mercury).

Standard reference material or *SRM* means a calibration gas mixture issued and certified by NIST as having specific known chemical or physical property values.

Standard reference material-equivalent compressed gas primary reference material (SRM-equivalent PRM) means those gas mixtures listed in a declaration of equivalence in accordance with section 2.1.2 of the ''EPA Traceability Protocol for Assay and Certification of Gaseous Calibration Standards,'' September 1997, EPA–600/R–97/121.

State means one of the 48 contiguous States and the District of Columbia, any non-federal authorities in or including such States or the District of Columbia (including local agencies, interstate associations, and State-wide agencies), and any eligible Indian tribe in an area in such State or the District of Columbia. The term ''State'' shall have its conventional meaning where such meaning is clear from the context.

State operating permit program means an operating permit program that the Administrator has approved under part 70 of this chapter.

Stationary gas turbine means a turbine that is not self-propelled and that combusts natural gas, other gaseous fuel with a total sulfur content no greater than the total sulfur content of natural gas, or fuel oil in order to heat inlet combustion air and thereby turn a turbine in addition to or instead of producing steam or heating water.

Steam sales agreement is a legally binding agreement between a QF, IPP, new IPP, or firm associated with such facility and an industrial or commercial establishment requiring steam that establishes the terms and conditions under which the facility will supply steam to the establishment.

Submit or serve means to send or transmit a document, information, or correspondence to the person specified in accordance with the applicable regulation:

(1) In person;

(2) By United States Postal Service; or

(3) By other equivalent means of dispatch, or transmission, and delivery. Compliance with any ''submission'', ''service'', or ''mailing'' deadline shall be determined by the date of dispatch, transmission, or mailing and not the date of receipt.

Substitute data means emissions or volumetric flow data provided to assure 100 percent recording and reporting of emissions when all or part of the continuous emission monitoring system is not functional or is operating outside applicable performance specifications.

Substitution unit means an affected unit, other than a unit under section 410 of the Act, that is designated as a Phase I unit in a substitution plan under § 72.41.

Sulfur-free generation means the generation of electricity by a process that does not have any emissions of sulfur dioxide, including hydroelectric, nuclear, solar, or wind generation. A ''sulfur-free generator'' is a generator that is located in one of the 48 contiguous States or the District of Columbia and produces ''sulfur-free generation.''

Supply-side measure means a measure to improve the efficiency of the generation, transmission, or distribution of

electricity, implemented by a utility in connection with its operations or facilities to provide electricity to its customers, and includes the measures set forth in part 73, appendix A, section 2 of this chapter.

Thermal energy means the thermal output produced by a combustion source used directly as part of a manufacturing process but not used to produce electricity.

Ton or tonnage means any ''short ton'' (*i.e.*, 2,000 pounds). For the purpose of determining compliance with the Acid Rain emissions limitations and reduction requirements, total tons for a year shall be calculated as the sum of all recorded hourly emissions (or the tonnage equivalent of the recorded hourly emissions rates) in accordance with part 75 of this chapter, with any remaining fraction of a ton equal to or greater than 0.50 ton deemed to equal one ton and any fraction of a ton less than 0.50 ton deemed not to equal any ton.

Total planned net output capacity means the planned generator output capacity, excluding that portion of the electrical power which is designed to be used at the power production facility, as specified under one or more qualifying power purchase commitments or contemporaneous documents as of November 15, 1990; ''Total installed net output capacity'' shall be the generator output capacity, excluding that portion of the electrical power actually used at the power production facility, as installed.

Transfer unit means a Phase I unit that transfers all or part of its Phase I emission reduction obligations to a control unit designated pursuant to a Phase I extension plan under § 72.42.

Underutilization means a reduction, during any calendar year in Phase I, of the heat input (expressed in mmBtu for the calendar year) at a Phase I unit below the unit's baseline.

Unit means a fossil fuel-fired combustion device.

Unit load means the total (*i.e.*, gross) output of a unit or source in any calendar year (or other specified time period) produced by combusting a given heat input of fuel, expressed in terms of:

(1) The total electrical generation (MWe) for use within the plant and for sale; or

(2) In the case of a unit or source that uses part of its heat input for purposes other than electrical generation, the total steam pressure (psia) produced by the unit or source.

Unit operating day means a calendar day in which a unit combusts any fuel.

Unit operating hour means a clock hour during which a unit combusts any fuel, either for part of the hour or for the entire hour.

Unit operating quarter means a calendar quarter in which a unit combusts any fuel.

Unit operating time means the portion of a clock hour during which a unit combusts any fuel. The unit operating time, in hours, is expressed as a decimal fraction, with valid values ranging from 0.00 to 1.00.

Utility means any person that sells electricity.

Utility competitive bid solicitation is a public request from a regulated utility for offers to the utility for meeting future generating needs. A qualifying facility, independent power production facility, or new IPP may be regarded as having been ''selected'' in such solicitation if the utility has named the facility as a project with which the utility intends to negotiate a power sales agreement.

Utility regulatory authority means an authority, board, commission, or other entity (limited to the local-, State-, or federal-level, whenever so specified) responsible for overseeing the business operations of utilities located within its jurisdiction, including, but not limited to, utility rates and charges to customers.

Utility system means all interconnected units and generators operated by the same utility operating company.

Utility unit means a unit owned or operated by a utility:

(1) That serves a generator in any State that produces electricity for sale, or

(2) That during 1985, served a generator in any State that produced electricity for sale.

(3) Notwithstanding paragraphs (1) and (2) of this definition, a unit that

was in operation during 1985, but did not serve a generator that produced electricity for sale during 1985, and did not commence commercial operation on or after November 15, 1990 is not a utility unit for purposes of the Acid Rain Program.

(4) Notwithstanding paragraphs (1) and (2) of this definition, a unit that cogenerates steam and electricity is not a utility unit for purposes of the Acid Rain Program, unless the unit is constructed for the purpose of supplying, or commences construction after November 15, 1990 and supplies, more than one-third of its potential electrical output capacity and more than 25 MWe output to any power distribution system for sale.

Utilization means the heat input (expressed in mmBtu/time) for a unit.

Very low sulfur fuel means either:

(1) A fuel with a total sulfur content no greater than 0.05 percent sulfur by weight;

(2) Natural gas or pipeline natural gas, as defined in this section; or

(3) Any gaseous fuel with a total sulfur content no greater than 20 grains of sulfur per 100 standard cubic feet.

Volumetric flow means the rate of movement of a specified volume of gas past a cross-sectional area (e.g., cubic feet per hour).

Zero air material means either:

(1) A calibration gas certified by the gas vendor not to contain concentrations of SO_2, NO_X, or total hydrocarbons above 0.1 parts per million (ppm), a concentration of CO above 1 ppm, or a concentration of CO_2 above 400 ppm;

(2) Ambient air conditioned and purified by a CEMS for which the CEMS manufacturer or vendor certifies that the particular CEMS model produces conditioned gas that does not contain concentrations of SO_2, NO_X, or total hydrocarbons above 0.1 ppm, a concentration of CO above 1 ppm, or a concentration of CO_2 above 400 ppm;

(3) For dilution-type CEMS, conditioned and purified ambient air provided by a conditioning system concurrently supplying dilution air to the CEMS; or

(4) A multicomponent mixture certified by the supplier of the mixture that the concentration of the component being zeroed is less than or equal to the applicable concentration specified in paragraph (1) of this definition, and that the mixture's other components do not interfere with the CEM readings.

[58 FR 3650, Jan. 11, 1993]

EDITORIAL NOTE: For FEDERAL REGISTER citations affecting § 72.2, see the List of CFR Sections Affected, which appears in the Finding Aids section of the printed volume and on GPO Access.

§ 72.3 Measurements, abbreviations, and acronyms.

Measurements, abbreviations, and acronyms used in this part are defined as follows:

acfh—actual cubic feet per hour.
atm—atmosphere.
bbl—barrel.
Btu—British thermal unit.
°C—degree Celsius (centigrade).
CEMS—continuous emission monitoring system.
cfm—cubic feet per minute.
cm—centimeter.
dcf—dry cubic feet.
DOE—Department of Energy.
dscf—dry cubic feet at standard conditions.
dscfh—dry cubic feet per hour at standard conditions.
EIA—Energy Information Administration.
eq—equivalent.
°F—degree Fahrenheit.
fps—feet per second.
gal—gallon.
hr—hour.
in—inch.
°K—degree Kelvin.
kacfm—thousands of cubic feet per minute at actual conditions.
kscfh—thousands of cubic feet per hour at standard conditions.
Kwh—kilowatt hour.
lb—pounds.
m—meter.
mmBtu—million Btu.
min—minute.
mol. wt.—molecular weight.
MWe—megawatt electrical.
MWge—gross megawatt electrical.
NIST—National Institute of Standards and Technology.
ppm—parts per million.
psi—pounds per square inch.
°R—degree Rankine.
RATA—relative accuracy test audit.
scf—cubic feet at standard conditions.
scfh—cubic feet per hour at standard conditions.
sec—second.
std—at standard conditions.
CO_2—carbon dioxide.

NO_X—nitrogen oxides.
O_2—oxygen.
THC—total hydrocarbon content.
SO_2—sulfur dioxide.

[58 FR 3650, Jan. 11, 1993, as amended at 64 FR 28588, May 26, 1999]

§ 72.4 Federal authority.

(a) The Administrator reserves all authority under sections 112(r)(9), 113, 114, 120, 301, 303, 304, 306, and 307(a) of the Act, including, but not limited to, the authority to:

(1) Secure information needed for the purpose of developing, revising, or implementing, or of determining whether any person is in violation of, any standard, method, requirement, or prohibition of the Act, this part, parts 73, 74, 75, 76, 77, and 78 of this chapter;

(2) Make inspections, conduct tests, examine records, and require an owner or operator of an affected unit to submit information reasonably required for the purpose of developing, revising, or implementing, or of determining whether any person is in violation of, any standard, method, requirement, or prohibition of the Act, this part, parts 73, 74, 75, 76, 77, and 78 of this chapter.

(3) Issue orders, call witnesses, and compel the production of documents.

(b) The Administrator reserves the right under title IV of the Act to take any action necessary to protect the orderly and competitive functioning of the allowance system, including actions to prevent fraud and misrepresentation.

[58 FR 3650, Jan. 11, 1993, as amended at 60 FR 17113, Apr. 4, 1995]

§ 72.5 State authority.

Consistent with section 116 of the Act, the provisions of the Acid Rain Program shall not be construed in any manner to preclude any State from adopting and enforcing any other air quality requirement (including any continuous emissions monitoring) that is not less stringent than, and does not alter, any requirement applicable to an affected unit or affected source under the Acid Rain Program; *provided* that such State requirement, if articulated in an operating permit, is in a portion of the operating permit separate from the portion containing the Acid Rain Program requirements.

§ 72.6 Applicability.

(a) Each of the following units shall be an affected unit, and any source that includes such a unit shall be an affected source, subject to the requirements of the Acid Rain Program:

(1) A unit listed in table 1 of § 73.10(a) of this chapter.

(2) A unit that is listed in table 2 or 3 of § 73.10 of this chapter and any other existing utility unit, except a unit under paragraph (b) of this section.

(3) A utility unit, except a unit under paragraph (b) of this section, that:

(i) Is a new unit; or

(ii) Did not serve a generator with a nameplate capacity greater than 25 MWe on November 15, 1990 but serves such a generator after November 15, 1990.

(iii) Was a simple combustion turbine on November 15, 1990 but adds or uses auxiliary firing after November 15, 1990;

(iv) Was an exempt cogeneration facility under paragraph (b)(4) of this section but during any three calendar year period after November 15, 1990 sold, to a utility power distribution system, an annual average of more than one-third of its potential electrical output capacity and more than 219,000 MWe-hrs electric output, on a gross basis;

(v) Was an exempt qualifying facility under paragraph (b)(5) of this section but, at any time after the later of November 15, 1990 or the date the facility commences commercial operation, fails to meet the definition of qualifying facility;

(vi) Was an exempt IPP under paragraph (b)(6) of this section but, at any time after the later of November 15, 1990 or the date the facility commences commercial operation, fails to meet the definition of independent power production facility; or

(vii) Was an exempt solid waste incinerator under paragraph (b)(7) of this section but during any three calendar year period after November 15, 1990 consumes 20 percent or more (on a Btu basis) fossil fuel.

(b) The following types of units are not affected units subject to the requirements of the Acid Rain Program:

(1) A simple combustion turbine that commenced commercial operation before November 15, 1990.

(2) Any unit that commenced commercial operation before November 15, 1990 and that did not, as of November 15, 1990, and does not currently, serve a generator with a nameplate capacity of greater than 25 MWe.

(3) Any unit that, during 1985, did not serve a generator that produced electricity for sale and that did not, as of November 15, 1990, and does not currently, serve a generator that produces electricity for sale.

(4) A cogeneration facility which:

(i) For a unit that commenced construction on or prior to November 15, 1990, was constructed for the purpose of supplying equal to or less than one-third its potential electrical output capacity or equal to or less than 219,000 MWe-hrs actual electric output on an annual basis to any utility power distribution system for sale (on a gross basis). If the purpose of construction is not known, the Administrator will presume that actual operation from 1985 through 1987 is consistent with such purpose. However, if in any three calendar year period after November 15, 1990, such unit sells to a utility power distribution system an annual average of more than one-third of its potential electrical output capacity and more than 219,000 MWe-hrs actual electric output (on a gross basis), that unit shall be an affected unit, subject to the requirements of the Acid Rain Program; or

(ii) For units which commenced construction after November 15, 1990, supplies equal to or less than one-third its potential electrical output capacity or equal to or less than 219,000 MWe-hrs actual electric output on an annual basis to any utility power distribution system for sale (on a gross basis). However, if in any three calendar year period after November 15, 1990, such unit sells to a utility power distribution system an annual average of more than one-third of its potential electrical output capacity and more than 219,000 MWe-hrs actual electric output (on a gross basis), that unit shall be an affected unit, subject to the requirements of the Acid Rain Program.

(5) A qualifying facility that:

(i) Has, as of November 15, 1990, one or more qualifying power purchase commitments to sell at least 15 percent of its total planned net output capacity; and

(ii) Consists of one or more units designated by the owner or operator with total installed net output capacity not exceeding 130 percent of the total planned net output capacity. If the emissions rates of the units are not the same, the Administrator may exercise discretion to designate which units are exempt.

(6) An independent power production facility that:

(i) Has, as of November 15, 1990, one or more qualifying power purchase commitments to sell at least 15 percent of its total planned net output capacity; and

(ii) Consists of one or more units designated by the owner or operator with total installed net output capacity not exceeding 130 percent of its total planned net output capacity. If the emissions rates of the units are not the same, the Administrator may exercise discretion to designate which units are exempt.

(7) A solid waste incinerator, if more than 80 percent (on a Btu basis) of the annual fuel consumed at such incinerator is other than fossil fuels. For solid waste incinerators which began operation before January 1, 1985, the average annual fuel consumption of non-fossil fuels for calendar years 1985 through 1987 must be greater than 80 percent for such an incinerator to be exempt. For solid waste incinerators which began operation after January 1, 1985, the average annual fuel consumption of non-fossil fuels for the first three years of operation must be greater than 80 percent for such an incinerator to be exempt. If, during any three calendar year period after November 15, 1990, such incinerator consumes 20 percent or more (on a Btu basis) fossil fuel, such incinerator will be an affected source under the Acid Rain Program.

(8) A non-utility unit.

(9) A unit for which an exemption under § 72.7 or § 72.8 is in effect. Although such a unit is not an affected unit, the unit shall be subject to the

requirements of § 72.7 or § 72.8, as applicable to the exemption.

(c) A certifying official of an owner or operator of any unit may petition the Administrator for a determination of applicability under this section.

(1) *Petition Content*. The petition shall be in writing and include identification of the unit and relevant facts about the unit. In the petition, the certifying official shall certify, by his or her signature, the statement set forth at § 72.21(b)(2). Within 10 business days of receipt of any written determination by the Administrator covering the unit, the certifying official shall provide each owner or operator of the unit, facility, or source with a copy of the petition and a copy of the Administrator's response.

(2) *Timing*. The petition may be submitted to the Administrator at any time but, if possible, should be submitted prior to the issuance (including renewal) of a Phase II Acid Rain permit for the unit.

(3) *Submission*. All submittals under this section shall be made by the certifying official to the Director, Acid Rain Division, (6204J), 1200 Pennsylvania Ave., NW., Washington, DC 20460.

(4) *Response*. The Administrator will issue a written response based upon the factual submittal meeting the requirements of paragraph (c)(1) of this section.

(5) *Administrative appeals*. The Administrator's determination of applicability is a decision appealable under 40 CFR part 78 of this chapter.

(6) *Effect of determination*. The Administrator's determination of applicability shall be binding upon the permitting authority, unless the petition is found to have contained significant errors or omissions.

[58 FR 3650, Jan. 11, 1993, as amended at 58 FR 15648, Mar. 23, 1993; 62 FR 55475, Oct. 24, 1997; 64 FR 28588, May 26, 1999; 66 FR 12978, Mar. 1, 2001]

§ 72.7 New units exemption.

(a) *Applicability*. This section applies to any new utility unit that has not previously lost an exemption under paragraph (f)(4) of this section and that, in each year starting with the first year for which the unit is to be exempt under this section:

(1) Serves during the entire year (except for any period before the unit commenced commercial operation) one or more generators with total nameplate capacity of 25 MWe or less;

(2) Burns fuel that does not include any coal or coal-derived fuel (except coal-derived gaseous fuel with a total sulfur content no greater than natural gas); and

(3) Burns gaseous fuel with an annual average sulfur content of 0.05 percent or less by weight (as determined under paragraph (d) of this section) and non-gaseous fuel with an annual average sulfur content of 0.05 percent or less by weight (as determined under paragraph (d) of this section).

(b)(1) Any new utility unit that meets the requirements of paragraph (a) of this section and that is not allocated any allowances under subpart B of part 73 of this chapter shall be exempt from the Acid Rain Program, except for the provisions of this section, §§ 72.2 through 72.6, and §§ 72.10 through 72.13.

(2) The exemption under paragraph (b)(1) of this section shall be effective on January 1 of the first full calendar year for which the unit meets the requirements of paragraph (a) of this section. By December 31 of the first year for which the unit is to be exempt under this section, a statement signed by the designated representative (authorized in accordance with subpart B of this part) or, if no designated representative has been authorized, a certifying official of each owner of the unit shall be submitted to permitting authority otherwise responsible for administering a Phase II Acid Rain permit for the unit. If the Administrator is not the permitting authority, a copy of the statement shall be submitted to the Administrator. The statement, which shall be in a format prescribed by the Administrator, shall identify the unit, state the nameplate capacity of each generator served by the unit and the fuels currently burned or expected to be burned by the unit and their sulfur content by weight, and state that the owners and operators of the unit will comply with paragraph (f) of this section.

(3) After receipt of the statement under paragraph (b)(2) of this section,

the permitting authority shall amend under § 72.83 the operating permit covering the source at which the unit is located, if the source has such a permit, to add the provisions and requirements of the exemption under paragraphs (a), (b)(1), (d), and (f) of this section.

(c)(1) Any new utility unit that meets the requirements of paragraph (a) of this section and that is allocated one or more allowances under subpart B of part 73 of this chapter shall be exempt from the Acid Rain Program, except for the provisions of this section, §§ 72.2 through 72.6, and §§ 72.10 through 72.13, if each of the following requirements are met:

(i) The designated representative (authorized in accordance with subpart B of this part) or, if no designated representative has been authorized, a certifying official of each owner of the unit submits to the permitting authority otherwise responsible for administering a Phase II Acid Rain permit for the unit a statement (in a format prescribed by the Administrator) that:

(A) Identifies the unit and states the nameplate capacity of each generator served by the unit and the fuels currently burned or expected to be burned by the unit and their sulfur content by weight;

(B) States that the owners and operators of the unit will comply with paragraph (f) of this section;

(C) Surrenders allowances equal in number to, and with the same or earlier compliance use date as, all of those allocated to the unit under subpart B of part 73 of this chapter for the first year that the unit is to be exempt under this section and for each subsequent year; and

(D) Surrenders any proceeds for allowances under paragraph (c)(1)(i)(C) or this section withheld from the unit under § 73.10 of this chapter. If the Administrator is not the permitting authority, a copy of the statement shall be submitted to the Administrator.

(ii) The Administrator deducts from the compliance account of the source that includes the unit allowances under paragraph (c)(1)(i)(C) of this section and receives proceeds under paragraph (c)(1)(i)(D) of this section. Within 5 business days of receiving a statement in accordance with paragraph (c)(1)(i) of this section, the Administrator shall either deduct the allowances under paragraph (c)(1)(i)(C) of this section or notify the owners and operators that there are insufficient allowances to make such deductions.

(2) The exemption under paragraph (c)(1) of this section shall be effective on January 1 of the first full calendar year for which the requirements of paragraphs (a) and (c)(1) of this section are met. After notification by the Administrator under the third sentence of paragraph (c)(1)(ii) of this section, the permitting authority shall amend under § 72.83 the operating permit covering the source at which the unit is located, if the source has such a permit, to add the provisions and requirements of the exemption under paragraphs (a), (c)(1), (d), and (f) of this section.

(d) Compliance with the requirement that fuel burned during the year have an annual average sulfur content of 0.05 percent by weight or less shall be determined as follows using a method of determining sulfur content that provides information with reasonable precision, reliability, accessibility, and timeliness:

(1) For gaseous fuel burned during the year, if natural gas is the only gaseous fuel burned, the requirement is assumed to be met;

(2) For gaseous fuel burned during the year where other gas in addition to or besides natural gas is burned, the requirement is met if the annual average sulfur content is equal to or less than 0.05 percent by weight. The annual average sulfur content, as a percentage by weight, for the gaseous fuel burned shall be calculated as follows:

$$\%S_{annual} = \frac{\sum_{n=1}^{last} \%S_n V_n d_n}{\sum_{n=1}^{last} V_n d_n}$$

where:

$\%S_{annual}$ = annual average sulfur content of the fuel burned during the year by the unit, as a percentage by weight;

$\%S_n$ = sulfur content of the nth sample of the fuel delivered during the year to the unit, as a percentage by weight;

V_n = volume of the fuel in a delivery during the year to the unit of which the nth sample is taken, in standard cubic feet; or, for fuel delivered during the year to the unit continuously by pipeline, volume of the fuel delivered starting from when the nth sample of such fuel is taken until the next sample of such fuel is taken, in standard cubic feet;

d_n = density of the nth sample of the fuel delivered during the year to the unit, in lb per standard cubic foot; and

n = each sample taken of the fuel delivered during the year to the unit, taken at least once for each delivery; or, for fuel that is delivered during the year to the unit continuously by pipeline, at least once each quarter during which the fuel is delivered.

(3) For nongaseous fuel burned during the year, the requirement is met if the annual average sulfur content is equal to or less than 0.05 percent by weight. The annual average sulfur content, as a percentage by weight, shall be calculated using the equation in paragraph (d)(2) of this section. In lieu of the factor, volume times density (V_n d_n), in the equation, the factor, mass (M_n), may be used, where M_n is: mass of the nongaseous fuel in a delivery during the year to the unit of which the nth sample is taken, in lb; or, for fuel delivered during the year to the unit continuously by pipeline, mass of the nongaseous fuel delivered starting from when the nth sample of such fuel is taken until the next sample of such fuel is taken, in lb.

(e)(1) A utility unit that was issued a written exemption under this section and that meets the requirements of paragraph (a) of this section shall be exempt from the Acid Rain Program, except for the provisions of this section, §§ 72.2 through 72.6, and §§ 72.10 through 72.13 and shall be subject to the requirements of paragraphs (a), (d), (e)(2), and (f) of this section in lieu of the requirements set forth in the written exemption. The permitting authority shall amend under § 72.83 the operating permit covering the source at which the unit is located, if the source has such a permit, to add the provisions and requirements of the exemption under this paragraph (e)(1) and paragraphs (a), (d), (e)(2), and (f) of this section.

(2) If a utility unit under paragraph (e)(1) of this section is allocated one or more allowances under subpart B of part 73 of this chapter, the designated representative (authorized in accordance with subpart B of this part) or, if no designated representative has been authorized, a certifying official of each owner of the unit shall submit to the permitting authority that issued the written exemption a statement (in a format prescribed by the Administrator) meeting the requirements of paragraph (c)(1)(i)(C) and (D) of this section. The statement shall be submitted by June 31, 1998 and, if the Administrator is not the permitting authority, a copy shall be submitted to the Administrator.

(f) *Special Provisions.* (1) The owners and operators and, to the extent applicable, the designated representative of a unit exempt under this section shall:

(i) Comply with the requirements of paragraph (a) of this section for all periods for which the unit is exempt under this section; and

(ii) Comply with the requirements of the Acid Rain Program concerning all periods for which the exemption is not in effect, even if such requirements arise, or must be complied with, after the exemption takes effect.

(2) For any period for which a unit is exempt under this section:

(i) For purposes of applying parts 70 and 71 of this chapter, the unit shall not be treated as an affected unit under the Acid Rain Program and shall continue to be subject to any other applicable requirements under parts 70 and 71 of this chapter.

(ii) The unit shall not be eligible to be an opt-in source under part 74 of chapter.

(3) For a period of 5 years from the date the records are created, the owners and operators of a unit exempt under this section shall retain at the source that includes the unit records demonstrating that the requirements of paragraph (a) of this section are met. The 5-year period for keeping records may be extended for cause, at any time prior to the end of the period, in writing by the Administrator or the permitting authority.

(i) Such records shall include, for each delivery of fuel to the unit or for fuel delivered to the unit continuously by pipeline, the type of fuel, the sulfur

content, and the sulfur content of each sample taken.

(ii) The owners and operators bear the burden of proof that the requirements of paragraph (a) of this section are met.

(4) Loss of exemption. (i) On the earliest of the following dates, a unit exempt under paragraphs (b), (c), or (e) of this section shall lose its exemption and for purposes of applying parts 70 and 71 of this chapter, shall be treated as an affected unit under the Acid Rain Program:

(A) The date on which the unit first serves one or more generators with total nameplate capacity in excess of 25 MWe;

(B) The date on which the unit burns any coal or coal-derived fuel except for coal-derived gaseous fuel with a total sulfur content no greater than natural gas; or

(C) January 1 of the year following the year in which the annual average sulfur content for gaseous fuel burned at the unit exceeds 0.05 percent by weight (as determined under paragraph (d) of this section) or for nongaseous fuel burned at the unit exceeds 0.05 percent by weight (as determined under paragraph (d) of this section).

(ii) Notwithstanding § 72.30(b) and (c), the designated representative for a unit that loses its exemption under this section shall submit a complete Acid Rain permit application on the later of January 1, 1998 or 60 days after the first date on which the unit is no longer exempt.

(iii) For the purpose of applying monitoring requirements under part 75 of this chapter, a unit that loses its exemption under this section shall be treated as a new unit that commenced commercial operation on the first date on which the unit is no longer exempt.

[62 FR 55476, Oct. 24, 1997, as amended at 71 FR 25377, Apr. 28, 2006; 70 FR 25334, May 12, 2005]

§ 72.8 Retired units exemption.

(a) This section applies to any affected unit (except for an opt-in source) that is permanently retired.

(b)(1) Any affected unit (except for an opt-in source) that is permanently retired shall be exempt from the Acid Rain Program, except for the provisions of this section, §§ 72.2 through 72.6, §§ 72.10 through 72.13, and subpart B of part 73 of this chapter.

(2) The exemption under paragraph (b)(1) of this section shall become effective on January 1 of the first full calendar year during which the unit is permanently retired. By December 31 of the first year that the unit is to be exempt under this section, the designated representative (authorized in accordance with subpart B of this part), or, if no designated representative has been authorized, a certifying official of each owner of the unit shall submit a statement to the permitting authority otherwise responsible for administering a Phase II Acid Rain permit for the unit. If the Administrator is not the permitting authority, a copy of the statement shall be submitted to the Administrator. The statement shall state (in a format prescribed by the Administrator) that the unit is permanently retired and will comply with the requirements of paragraph (d) of this section.

(3) After receipt of the notice under paragraph (b)(2) of this section, the permitting authority shall amend under § 72.83 the operating permit covering the source at which the unit is located, if the source has such a permit, to add the provisions and requirements of the exemption under paragraphs (b)(1) and (d) of this section.

(c) A unit that was issued a written exemption under this section and that is permanently retired shall be exempt from the Acid Rain Program, except for the provisions of this section, §§ 72.2 through 72.6, §§ 72.10 through 72.13, and subpart B of part 73 of this chapter, and shall be subject to the requirements of paragraph (d) of this section in lieu of the requirements set forth in the written exemption. The permitting authority shall amend under § 72.83 the operating permit covering the source at which the unit is located, if the source has such a permit, to add the provisions and requirements of the exemption under this paragraph (c) and paragraph (d) of this section.

(d) *Special Provisions.* (1) A unit exempt under this section shall not emit any sulfur dioxide and nitrogen oxides

starting on the date that the exemption takes effect. The owners and operators of the unit will be allocated allowances in accordance with subpart B of part 73 of this chapter. If the unit is a Phase I unit, for each calendar year in Phase I, the designated representative of the unit shall submit a Phase I permit application in accordance with subparts C and D of this part 72 and an annual certification report in accordance with §§ 72.90 through 72.92 and is subject to §§ 72.95 and 72.96.

(2) A unit exempt under this section shall not resume operation unless the designated representative of the source that includes the unit submits a complete Acid Rain permit application under § 72.31 for the unit not less than 24 months prior to the later of January 1, 2000 or the date on which the unit is first to resume operation.

(3) The owners and operators and, to the extent applicable, the designated representative of a unit exempt under this section shall comply with the requirements of the Acid Rain Program concerning all periods for which the exemption is not in effect, even if such requirements arise, or must be complied with, after the exemption takes effect.

(4) For any period for which a unit is exempt under this section:

(i) For purposes of applying parts 70 and 71 of this chapter, the unit shall not be treated as an affected unit under the Acid Rain Program and shall continue to be subject to any other applicable requirements under parts 70 and 71 of this chapter.

(ii) The unit shall not be eligible to be an opt-in source under part 74 of chapter.

(5) For a period of 5 years from the date the records are created, the owners and operators of a unit exempt under this section shall retain at the source that includes the unit records demonstrating that the unit is permanently retired. The 5-year period for keeping records may be extended for cause, at any time prior to the end of the period, in writing by the Administrator or the permitting authority. The owners and operators bear the burden of proof that the unit is permanently retired.

(6) Loss of exemption. (i) On the earlier of the following dates, a unit exempt under paragraph (b) or (c) of this section shall lose its exemption and for purposes of applying parts 70 and 71 of this chapter, shall be treated as an affected unit under the Acid Rain Program:

(A) The date on which the designated representative submits an Acid Rain permit application under paragraph (d)(2) of this section; or

(B) The date on which the designated representative is required under paragraph (d)(2) of this section to submit an Acid Rain permit application.

(ii) For the purpose of applying monitoring requirements under part 75 of this chapter, a unit that loses its exemption under this section shall be treated as a new unit that commenced commercial operation on the first date on which the unit resumes operation.

[62 FR 55477, Oct. 24, 1997; 62 FR 66279, Dec. 18, 1997, as amended at 71 FR 25377, Apr. 28, 2006]

§ 72.9 Standard requirements.

(a) *Permit Requirements.* (1) The designated representative of each affected source and each affected unit at the source shall:

(i) Submit a complete Acid Rain permit application (including a compliance plan) under this part in accordance with the deadlines specified in § 72.30;

(ii) Submit in a timely manner a complete reduced utilization plan if required under § 72.43; and

(iii) Submit in a timely manner any supplemental information that the permitting authority determines is necessary in order to review an Acid Rain permit application and issue or deny an Acid Rain permit.

(2) The owners and operators of each affected source and each affected unit at the source shall:

(i) Operate the unit in compliance with a complete Acid Rain permit application or a superseding Acid Rain permit issued by the permitting authority; and

(ii) Have an Acid Rain Permit.

(b) *Monitoring Requirements.* (1) The owners and operators and, to the extent applicable, designated representative of each affected source and each

affected unit at the source shall comply with the monitoring requirements as provided in part 75 of this chapter.

(2) The emissions measurements recorded and reported in accordance with part 75 of this chapter shall be used to determine compliance by the source or unit, as appropriate, with the Acid Rain emissions limitations and emissions reduction requirements for sulfur dioxide and nitrogen oxides under the Acid Rain Program.

(3) The requirements of part 75 of this chapter shall not affect the responsibility of the owners and operators to monitor emissions of other pollutants or other emissions characteristics at the unit under other applicable requirements of the Act and other provisions of the operating permit for the source.

(c) *Sulfur Dioxide Requirements.* (1) The owners and operators of each source and each affected unit at the source shall:

(i) Hold allowances, as of the allowance transfer deadline, in the source's compliance account (after deductions under § 73.34(c) of this chapter) not less than the total annual emissions of sulfur dioxide for the previous calendar year from the affected units at the source; and

(ii) Comply with the applicable Acid Rain emissions limitation for sulfur dioxide.

(2) Each ton of sulfur dioxide emitted in excess of the Acid Rain emissions limitations for sulfur dioxide shall constitute a separate violation of the Act.

(3) An affected unit shall be subject to the requirements under paragraph (c)(1) of this section as follows:

(i) Starting January 1, 1995, an affected unit under § 72.6(a)(1);

(ii) Starting on or after January 1, 1995 in accordance with §§ 72.41 and 72.43, an affected unit under § 72.6(a) (2) or (3) that is a substitution or compensating unit;

(iii) Starting January 1, 2000, an affected unit under § 72.6(a)(2) that is not a substitution or compensating unit; or

(iv) Starting on the later of January 1, 2000 or the deadline for monitor certification under part 75 of this chapter, an affected unit under § 72.6(a)(3) that is not a substitution or compensating unit.

(4) Allowances shall be held in, deducted from, or transferred among Allowance Tracking System accounts in accordance with the Acid Rain Program.

(5) An allowance shall not be deducted, in order to comply with the requirements under paragraph (c)(1)(i) of this section, prior to the calendar year for which the allowance was allocated.

(6) An allowance allocated by the Administrator under the Acid Rain Program is a limited authorization to emit sulfur dioxide in accordance with the Acid Rain Program. No provision of the Acid Rain Program, the Acid Rain permit application, the Acid Rain permit, or an exemption under §§ 72.7 or 72.8 and no provision of law shall be construed to limit the authority of the United States to terminate or limit such authorization.

(7) An allowance allocated by the Administrator under the Acid Rain Program does not constitute a property right.

(d) *Nitrogen Oxides Requirements.* The owners and operators of the source and each affected unit at the source shall comply with the applicable Acid Rain emissions limitation for nitrogen oxides.

(e) *Excess Emissions Requirements.* (1) The designated representative of an affected source that has excess emissions in any calendar year shall submit a proposed offset plan, as required under part 77 of this chapter.

(2) The owners and operators of an affected source that has excess emissions in any calendar year shall:

(i) Pay without demand the penalty required, and pay upon demand the interest on that penalty, as required by part 77 of this chapter; and

(ii) Comply with the terms of an approved offset plan, as required by part 77 of this chapter.

(f) *Recordkeeping and Reporting Requirements.* (1) Unless otherwise provided, the owners and operators of the source and each affected unit at the source shall keep on site at the source each of the following documents for a period of 5 years from the date the document is created. This period may be extended for cause, at any time prior to the end of 5 years, in writing by the Administrator or permitting authority.

(i) The certificate of representation for the designated representative for the source and each affected unit at the source and all documents that demonstrate the truth of the statements in the certificate of representation, in accordance with § 72.24; *provided* that the certificate and documents shall be retained on site at the source beyond such 5-year period until such documents are superseded because of the submission of a new certificate of representation changing the designated representative.

(ii) All emissions monitoring information, in accordance with part 75 of this chapter; *provided* that to the extent that part 75 provides for a 3-year period for recordkeeping, the 3-year period shall apply.

(iii) Copies of all reports, compliance certifications, and other submissions and all records made or required under the Acid Rain Program.

(iv) Copies of all documents used to complete an Acid Rain permit application and any other submission under the Acid Rain Program or to demonstrate compliance with the requirements of the Acid Rain Program.

(2) The designated representative of an affected source and each affected unit at the source shall submit the reports and compliance certifications required under the Acid Rain Program, including those under subpart I of this part and part 75 of this chapter.

(g) *Liability*. (1) Any person who knowingly violates any requirement or prohibition of the Acid Rain Program, a complete Acid Rain permit application, an Acid Rain permit, or an exemption under § 72.7 or § 72.8, including any requirement for the payment of any penalty owed to the United States, shall be subject to enforcement pursuant to section 113(c) of the Act.

(2) Any person who knowingly makes a false, material statement in any record, submission, or report under the Acid Rain Program shall be subject to criminal enforcement pursuant to section 113(c) of the Act and 18 U.S.C. 1001.

(3) No permit revision shall excuse any violation of the requirements of the Acid Rain Program that occurs prior to the date that the revision takes effect.

(4) Each affected source and each affected unit shall meet the requirements of the Acid Rain Program.

(5) Any provision of the Acid Rain Program that applies to an affected source (including a provision applicable to the designated representative of an affected source) shall also apply to the owners and operators of such source and of the affected units at the source.

(6) Any provision of the Acid Rain Program that applies to an affected unit (including a provision applicable to the designated representative of an affected unit) shall also apply to the owners and operators of such unit.

(7) Each violation of a provision of this part, parts 73, 74, 75, 76, 77, and 78 of this chapter, by an affected source or affected unit, or by an owner or operator or designated representative of such source or unit, shall be a separate violation of the Act.

(h) *Effect on Other Authorities*. No provision of the Acid Rain Program, an Acid Rain permit application, an Acid Rain permit, or an exemption under § 72.7 or § 72.8 shall be construed as:

(1) Except as expressly provided in title IV of the Act, exempting or excluding the owners and operators and, to the extent applicable, the designated representative of an affected source or affected unit from compliance with any other provision of the Act, including the provisions of title I of the Act relating to applicable National Ambient Air Quality Standards or State Implementation Plans.

(2) Limiting the number of allowances a source can hold; *provided*, that the number of allowances held by the source shall not affect the source's obligation to comply with any other provisions of the Act.

(3) Requiring a change of any kind in any State law regulating electric utility rates and charges, affecting any State law regarding such State regulation, or limiting such State regulation, including any prudence review requirements under such State law.

(4) Modifying the Federal Power Act or affecting the authority of the Federal Energy Regulatory Commission under the Federal Power Act.

(5) Interfering with or impairing any program for competitive bidding for

power supply in a State in which such program is established.

[58 FR 3650, Jan. 11, 1993, as amended at 60 FR 17113, Apr. 4, 1995; 62 FR 55478, Oct. 24, 1997; 66 FR 12978, Mar. 1, 2001; 70 FR 25334, May 12, 2005]

§ 72.10 Availability of information.

The availability to the public of information provided to, or otherwise obtained by, the Administrator under the Acid Rain Program shall be governed by part 2 of this chapter.

§ 72.11 Computation of time.

(a) Unless otherwise stated, any time period scheduled, under the Acid Rain Program, to begin on the occurrence of an act or event shall begin on the day the act or event occurs.

(b) Unless otherwise stated, any time period scheduled, under the Acid Rain Program, to begin before the occurrence of an act or event shall be computed so that the period ends on the day before the act or event occurs.

(c) Unless otherwise stated, if the final day of any time period, under the Acid Rain Program, falls on a weekend or a Federal holiday, the time period shall be extended to the next business day.

(d) Whenever a party or interested person has the right, or is required, to act under the Acid Rain Program within a prescribed time period after service of notice or other document upon him or her by mail, 3 days shall be added to the prescribed time.

§ 72.12 Administrative appeals.

The procedures for appeals of decisions of the Administrator under this part are contained in part 78 of this chapter.

§ 72.13 Incorporation by reference.

The materials listed in this section are incorporated by reference in the corresponding sections noted. These incorporations by reference were approved by the Director of the Federal Register in accordance with 5 U.S.C. 552(a) and 1 CFR part 51. These materials are incorporated as they existed on the date of approval, and a notice of any change in these materials will be published in the FEDERAL REGISTER. The materials are available for purchase at the corresponding address noted below and are available for inspection at the Public Information Reference Unit of the U.S. EPA, 401 M St., SW., Washington, DC and at the Library (MD–35), U.S. EPA, Research Triangle Park, North Carolina or at the National Archives and Records Administration (NARA). For information on the availability of this material at NARA, call 202–741–6030, or go to: *http://www.archives.gov/federal_register/code_of_federal_regulations/ibr_locations.html.*

(a) The following materials are available for purchase from the following addresses: American Society for Testing and Material (ASTM), 1916 Race Street, Philadelphia, Pennsylvania 19103; and the University Microfilms International 300 North Zeeb Road, Ann Arbor, Michigan 48106.

(1) ASTM D388–92, Standard Classification of Coals by Rank for § 72.2 of this chapter.

(2) ASTM D396–90a, Standard Specification for Fuel Oils, for § 72.2 of this chapter.

(3) ASTM D975–91, Standard Specification for Diesel Fuel Oils, for § 72.2 of this chapter.

(4) ASTM D2880–90a, Standard Specification for Gas Turbine Fuel Oils, for § 72.2 of this part.

(b) [Reserved]

[58 FR 3650, Jan. 11, 1993, as amended at 60 FR 26526, May 17, 1995; 62 FR 55478, Oct. 24, 1997]

Subpart B—Designated Representative

§ 72.20 Authorization and responsibilities of the designated representative.

(a) Except as provided under § 72.22, each affected source, including all affected units at the source, shall have one and only one designated representative, with regard to all matters under the Acid Rain Program concerning the source or any affected unit at the source.

(b) Upon receipt by the Administrator of a complete certificate of representation, the designated representative of the source shall represent and, by his or her representations, actions, inactions, or submissions, legally bind

each owner and operator of the affected source represented and each affected unit at the source in all matters pertaining to the Acid Rain Program, not withstanding any agreement between the designated representative and such owners and operators. The owners and operators shall be bound by any order issued to the designated representative by the Administrator, the permitting authority, or a court.

(c) The designated representative shall be selected and act in accordance with the certifications set forth in § 72.24(a) (4), (5), (7), and (9).

(d) No Acid Rain permit shall be issued to an affected source, nor shall any allowance transfer be recorded for an Allowance Tracking System account of an affected unit at a source, until the Administrator has received a complete certificate of representation for the designated representative of the source and the affected units at the source.

[58 FR 3650, Jan. 11, 1993, as amended at 71 FR 25378, Apr. 28, 2006]

§ 72.21 Submissions.

(a) Each submission under the Acid Rain Program shall be submitted, signed, and certified by the designated representative for all sources on behalf of which the submission is made.

(b) In each submission under the Acid Rain Program, the designated representative shall certify, by his or her signature:

(1) The following statement, which shall be included verbatim in such submission: ''I am authorized to make this submission on behalf of the owners and operators of the source or units for which the submission is made.''

(2) The following statement, which shall be included verbatim in such submission: ''I certify under penalty of law that I have personally examined, and am familiar with, the statements and information submitted in this document and all its attachments. Based on my inquiry of those individuals with primary responsibility for obtaining the information, I certify that the statements and information are to the best of my knowledge and belief true, accurate, and complete. I am aware that there are significant penalties for submitting false statements and information or omitting required statements and information, including the possibility of fine or imprisonment.''

(c) The Administrator and the permitting authority shall accept or act on a submission made on behalf of owners or operators of an affected source and an affected unit only if the submission has been made, signed, and certified in accordance with paragraphs (a) and (b) of this section.

(d)(1) The designated representative of a source shall serve notice on each owner and operator of the source and of an affected unit at the source:

(i) By the date of submission, of any Acid Rain Program submissions by the designated representative and

(ii) Within 10 business days of receipt of a determination, of any written determination by the Administrator or the permitting authority,

(iii) Provided that the submission or determination covers the source or the unit.

(2) The designated representative of a source shall provide each owner and operator of an affected unit at the source a copy of any submission or determination under paragraph (d)(1) of this section, unless the owner or operator expressly waives the right to receive such a copy.

(e) The provisions of this section shall apply to a submission made under parts 73, 74, 75, 76, 77, and 78 of this chapter only if it is made or signed or required to be made or signed, in accordance with parts 73, 74, 75, 76, 77, and 78 of this chapter, by:

(1) The designated representative; or

(2) The authorized account representative or alternate authorized account representative of a compliance account.

[58 FR 3650, Jan. 11, 1993, as amended at 60 FR 17113, Apr. 4, 1995; 70 FR 25334, May 12, 2005]

§ 72.22 Alternate designated representative.

(a) The certificate of representation may designate one and only one alternate designated representative, who may act on behalf of the designated representative. The agreement by which the alternate designated representative is selected shall include a procedure for the owners and operators

of the source and affected units at the source to authorize the alternate designated representative to act in lieu of the designated representative.

(b) Upon receipt by the Administrator of a complete certificate of representation that meets the requirements of § 72.24 (including those applicable to the alternate designated representative), any representation, action, inaction, or submission by the alternate designated representative shall be deemed to be an action, representation, or failure to act by the designated representative.

(c) In the event of a conflict, any action taken by the designated representative shall take precedence over any action taken by the alternate designated representative if, in the Administrator's judgement, the actions are concurrent and conflicting.

(d) Except in this section, § 72.23, and § 72.24, whenever the term ''designated representative'' is used under the Acid Rain Program, the term shall be construed to include the alternate designated representative.

(e)(1) Notwithstanding paragraph (a) of this section, the certification of representation may designate two alternate designated representatives for a unit if:

(i) The unit and at least one other unit, which are located in two or more of the contiguous 48 States or the District of Columbia, each have a utility system that is a subsidiary of the same company; and

(ii) The designated representative for the units under paragraph (e)(1)(i) of this section submits a NO_X averaging plan under § 76.11 of this chapter that covers such units and is approved by the permitting authority, *provided* that the approved plan remains in effect.

(2) Except in this paragraph (e), whenever the term ''alternate designated representative'' is used under the Acid Rain Program, the term shall be construed to include either of the alternate designated representatives authorized under this paragraph (e). Except in this section, § 72.23, and § 72.24, whenever the term ''designated representative'' is used under the Acid Rain Program, the term shall be construed to include either of the alternate designated representatives authorized under this paragraph (e).

[58 FR 3650, Jan. 11, 1993, as amended at 62 FR 55480, Oct. 24, 1997; 71 FR 25378, Apr. 28, 2006]

§ 72.23 Changing the designated representative, alternate designated representative; changes in the owners and operators.

(a) *Changing the designated representative.* The designated representative may be changed at any time upon receipt by the Administrator of a superseding complete certificate of representation. Notwithstanding any such change, all representations, actions, inactions, and submissions by the previous designated representative prior to the time and date when the Administrator receives the superseding certificate of representation shall be binding on the new designated representative and on the owners and operators of the source represented and the affected units at the source.

(b) *Changing the alternate designated representative.* The alternate designated representative may be changed at any time upon receipt by the Administrator of a superseding complete certificate of representation. Notwithstanding any such change, all representations, actions, inactions, and submissions by the previous alternate designated representative prior to the time and date when the Administrator receives the superseding certificate of representation shall be binding on the new alternate designated representative and on the owners and operators of the source represented and the affected units at the source.

(c) *Changes in the owners and operators.* (1) In the event an owner or operator of an affected source or an affected unit is not included in the list of owners and operators submitted in the certificate of representation, such owner or operator shall be deemed to be subject to and bound by the certificate of representation, the representations, actions, inactions, and submissions of the designated representative and any alternative designated representative of the source or unit, and the decisions, actions, and inactions of

the Administrator and permitting authority, as if the owner or operator were included in such list.

(2) Within 30 days following any change in the owners and operators of an affected unit, including the addition of a new owner or operator, the designated representative or any alternative designated representative shall submit a revision to the certificate of representation amending the list of owners and operators to include the change.

[58 FR 3650, Jan. 11, 1993, as amended at 71 FR 25378, Apr. 28, 2006]

§ 72.24 Certificate of representation.

(a) A complete certificate of representation for a designated representative or an alternate designated representative shall include the following elements in a format prescribed by the Administrator:

(1) Identification of the affected source and each affected unit at the source for which the certificate of representation is submitted, including identification and nameplate capacity of each generator served by each such unit.

(2) The name, address, and telephone and facsimile numbers of the designated representative and any alternate designated representative.

(3) A list of the owners and operators of the affected source and of each affected unit at the source.

(4) The following statement: ''I certify that I was selected as the 'designated representative' or 'alternate designated representative,' as applicable, by an agreement binding on the owners and operators of the affected source and each affected unit at the source.''

(5) [Reserved]

(6) The following statement: ''I certify that I have all necessary authority to carry out my duties and responsibilities under the Acid Rain Program on behalf of the owners and operators of the affected source and of each affected unit at the source and that each such owner and operator shall be fully bound by my representations, actions, inactions, or submissions.''

(7) [Reserved]

(8) The following statement: ''I certify that the owners and operators of the affected source and of each affected unit at the source shall be bound by any order issued to me by the Administrator, the permitting authority, or a court regarding the source or unit.''

(9) The following statement: ''Where there are multiple holders of a legal or equitable title to, or a leasehold interest in, an affected unit, or where a utility or industrial customer purchases power from an affected unit under a life-of-the-unit, firm power contractual arrangement, I certify that:

(i) ''I have given a written notice of my selection as the 'designated representative' or 'alternate designated representative', as applicable, and of the agreement by which I was selected to each owner and operator of the affected source and of each affected unit at the source; and

(ii) ''Allowances and proceeds of transactions involving allowances will be deemed to be held or distributed in proportion to each holder's legal, equitable, leasehold, or contractual reservation or entitlement, except that, if such multiple holders have expressly provided for a different distribution of allowances by contract, that allowances and the proceeds of transactions involving allowances will be deemed to be held or distributed in accordance with the contract.''

(10) [Reserved]

(11) The signature of the designated representative and any alternate designated representative who is authorized in the certificate of representation and the date signed.

(b) Unless otherwise required by the Administrator or the permitting authority, documents of agreement or notice referred to in the certificate of representation shall not be submitted to the Administrator or the permitting authority. Neither the Administrator nor the permitting authority shall be under any obligation to review or evaluate the sufficiency of such documents, if submitted.

[58 FR 3650, Jan. 11, 1993, as amended at 62 FR 55480, Oct. 24, 1997; 71 FR 25378, Apr. 28, 2006; 70 FR 25334, May 12, 2005; 72 FR 59205, Oct. 19, 2007]

§ 72.25 Objections.

(a) Once a complete certificate of representation has been submitted in

accordance with § 72.24, the Administrator will rely on the certificate of representation unless and until a superseding complete certificate is received by the Administrator.

(b) Except as provided in § 72.23, no objection or other communication submitted to the Administrator or the permitting authority concerning the authorization, or any representation, action, inaction, or submission, of the designated representative shall affect any representation, action, inaction, or submission of the designated representative, or the finality of any decision by the Administrator or permitting authority, under the Acid Rain Program. In the event of such communication, the Administrator and the permitting authority are not required to stay any allowance transfer, any submission, or the effect of any action or inaction under the Acid Rain Program.

(c) Neither the Administrator nor any permitting authority will adjudicate any private legal dispute concerning the authorization or any submission, action, or inaction of any designated representative, including private legal disputes concerning the proceeds of allowance transfers.

[58 FR 3650, Jan. 11, 1993, as amended at 62 FR 55480, Oct. 24, 1997; 71 FR 25378, Apr. 28, 2006]

§ 72.26 Delegation by designated representative and alternate designated representative.

(a) A designated representative may delegate, to one or more natural persons, his or her authority to make an electronic submission (in a format prescribed by the Administrator) to the Administrator provided for or required under this part and parts 73 through 77 of this chapter.

(b) An alternate designated representative may delegate, to one or more natural persons, his or her authority to make an electronic submission (in a format prescribed by the Administrator) to the Administrator provided for or required under this part and parts 73 through 77 of this chapter.

(c) In order to delegate authority to make an electronic submission to the Administrator in accordance with paragraph (a) or (b) of this section, the designated representative or alternate designated representative, as appropriate, must submit to the Administrator a notice of delegation, in a format prescribed by the Administrator, that includes the following elements:

(1) The name, address, e-mail address, telephone number, and facsimile transmission number (if any) of such designated representative or alternate designated representative;

(2) The name, address, e-mail address, telephone number, and facsimile transmission number (if any) of each such natural person (referred to as an ''agent'');

(3) For each such natural person, a list of the type or types of electronic submissions under paragraph (a) or (b) of this section for which authority is delegated to him or her; and

(4) The following certification statements by such designated representative or alternate designated representative, as appropriate:

(i) ''I agree that any electronic submission to the Administrator that is by an agent identified in this notice of delegation and of a type listed for such agent in this notice of delegation and that is made when I am a designated representative or alternate designated representative, as appropriate, and before this notice of delegation is superseded by another notice of delegation under 40 CFR 72.26(d) shall be deemed to be an electronic submission by me.''

(ii) ''Until this notice of delegation is superseded by another notice of delegation under 40 CFR 72.26(d), I agree to maintain an e-mail account and to notify the Administrator immediately of any change in my e-mail address unless all delegation of authority by me under 40 CFR 72.26 is terminated.''

(d) A notice of delegation submitted under paragraph (c) of this section shall be effective, with regard to the designated representative or alternate designated representative identified in such notice, upon receipt of such notice by the Administrator and until receipt by the Administrator of a superseding notice of delegation submitted by such designated representative or alternate designated representative, as appropriate. The superseding notice of delegation may replace any previously identified agent, add a new agent, or

eliminate entirely any delegation of authority.

(e) Any electronic submission covered by the certification in paragraph (c)(4)(i) of this section and made in accordance with a notice of delegation effective under paragraph (d) of this section shall be deemed to be an electronic submission by the designated representative or alternate designated representative submitting such notice of delegation.

[71 FR 25378, Apr. 28, 2006]

Subpart C—Acid Rain Permit Applications

§ 72.30 Requirement to apply.

(a) *Duty to apply*. The designated representative of any source with an affected unit shall submit a complete Acid Rain permit application by the applicable deadline in paragraphs (b) and (c) of this section, and the owners and operators of such source and any affected unit at the source shall not operate the source or unit without a permit that states its Acid Rain program requirements.

(b) *Deadlines*—(1) *Phase 1*. (i) The designated representative shall submit a complete Acid Rain permit application governing an affected unit during Phase I to the Administrator on or before February 15, 1993 for:

(A) Any source with such a unit under § 72.6(a)(1); and

(B) Any source with such a unit under § 72.6(a) (2) or (3) that is designated a substitution or compensating unit in a substitution plan or reduced utilization plan submitted to the Administrator for approval or conditional approval.

(ii) Notwithstanding paragraph (b)(1)(i) of this section, if a unit at a source not previously permitted is designated a substitution or compensating unit in a submission requesting revision of an existing Acid Rain permit, the designated representative of the unit shall submit a complete Acid Rain permit application on the date that the submission requesting the revision is made.

(2) *Phase II*. (i) For any source with an existing unit under § 72.6(a)(2), the designated representative shall submit a complete Acid Rain permit application governing such unit during Phase II to the permitting authority on or before January 1, 1996.

(ii) For any source with a new unit under § 72.6(a)(3)(i), the designated representative shall submit a complete Acid Rain permit application governing such unit to the permitting authority at least 24 months before the later of January 1, 2000 or the date on which the unit commences operation.

(iii) For any source with a unit under § 72.6(a)(3)(ii), the designated representative shall submit a complete Acid Rain permit application governing such unit to the permitting authority at least 24 months before the later of January 1, 2000 or the date on which the unit begins to serve a generator with a nameplate capacity greater than 25 MWe.

(iv) For any source with a unit under § 72.6(a)(3)(iii), the designated representative shall submit a complete Acid Rain permit application governing such unit to the permitting authority at least 24 months before the later of January 1, 2000 or the date on which the auxiliary firing commences operation.

(v) For any source with a unit under § 72.6(a)(3)(iv), the designated representative shall submit a complete Acid Rain permit application governing such unit to the permitting authority before the later of January 1, 1998 or March 1 of the year following the three calendar year period in which the unit sold to a utility power distribution system an annual average of more than one-third of its potential electrical output capacity and more than 219,000 MWe-hrs actual electric output (on a gross basis).

(vi) For any source with a unit under § 72.6(a)(3)(v), the designated representative shall submit a complete Acid Rain permit application governing such unit to the permitting authority before the later of January 1, 1998 or March 1 of the year following the calendar year in which the facility fails to meet the definition of qualifying facility.

(vii) For any source with a unit under § 72.6(a)(3)(vi), the designated representative shall submit a complete

Acid Rain permit application governing such unit to the permitting authority before the later of January 1, 1998 or March 1 of the year following the calendar year in which the facility fails to meet the definition of an independent power production facility.

(viii) For any source with a unit under § 72.6(a)(3)(vii), the designated representative shall submit a complete Acid Rain permit application governing such unit to the permitting authority before the later of January 1, 1998 or March 1 of the year following the three calendar year period in which the incinerator consumed 20 percent or more fossil fuel (on a Btu basis).

(c) *Duty to reapply*. The designated representative shall submit a complete Acid Rain permit application for each source with an affected unit at least 6 months prior to the expiration of an existing Acid Rain permit governing the unit during Phase II or an opt-in permit governing an opt-in source or such longer time as may be approved under part 70 of this chapter that ensures that the term of the existing permit will not expire before the effective date of the permit for which the application is submitted.

(d) The original and three copies of all permit applications for Phase I and where the Administrator is the permitting authority, for Phase II, shall be submitted to the EPA Regional Office for the Region where the affected source is located. The original and three copies of all permit applications for Phase II, where the Administrator is not the permitting authority, shall be submitted to the State permitting authority for the State where the affected source is located.

(e) Where two or more affected units are located at a source, the permitting authority may, in its sole discretion, allow the designated representative of the source to submit, under paragraph (a) or (c) of this section, two or more Acid Rain permit applications covering the units at the source, *provided* that each affected unit is covered by one and only one such application.

[58 FR 3650, Jan. 11, 1993, as amended at 58 FR 15649, Mar. 23, 1993; 60 FR 17113, Apr. 4, 1995; 62 FR 55480, Oct. 24, 1997]

§ 72.31 Information requirements for Acid Rain permit applications.

A complete Acid Rain permit application shall include the following elements in a format prescribed by the Administrator:

(a) Identification of the affected source for which the permit application is submitted;

(b) Identification of each Phase I unit at the source for which the permit application is submitted for Phase I or each affected unit (except for an opt-in source) at the source for which the permit application is submitted for Phase II;

(c) A complete compliance plan for each unit, in accordance with subpart D of this part;

(d) The standard requirements under § 72.9; and

(e) If the Acid Rain permit application is for Phase II and the unit is a new unit, the date that the unit has commenced or will commence operation and the deadline for monitor certification.

[58 FR 3650, Jan. 11, 1993, as amended at 62 FR 55480, Oct. 24, 1997]

§ 72.32 Permit application shield and binding effect of permit application.

(a) Once a designated representative submits a timely and complete Acid Rain permit application, the owners and operators of the affected source and the affected units covered by the permit application shall be deemed in compliance with the requirement to have an Acid Rain permit under § 72.9(a)(2) and § 72.30(a); *provided* that any delay in issuing an Acid Rain permit is not caused by the failure of the designated representative to submit in a complete and timely fashion supplemental information, as required by the permitting authority, necessary to issue a permit.

(b) Prior to the date on which an Acid Rain permit is issued or denied, an affected unit governed by and operated in accordance with the terms and requirements of a timely and complete Acid Rain permit application shall be deemed to be operating in compliance with the Acid Rain Program.

(c) A complete Acid Rain permit application shall be binding on the owners and operators and the designated

representative of the affected source and the affected units covered by the permit application and shall be enforceable as an Acid Rain permit from the date of submission of the permit application until the issuance or denial of an Acid Rain permit covering the units.

(d) If agency action concerning a permit is appealed under part 78 of this chapter, issuance or denial of the permit shall occur when the Administrator takes final agency action subject to judicial review.

[58 FR 3650, Jan. 11, 1993, as amended at 62 FR 55480, Oct. 24, 1997]

§ 72.33 Identification of dispatch system.

(a) Every Phase I unit shall be treated as part of a dispatch system for purposes of §§ 72.91 and 72.92 in accordance with this section.

(b)(1) The designated representatives of all affected units in a group of all units and generators that are interconnected and centrally dispatched and that are included in the same utility system, holding company, or power pool, may jointly submit to the Administrator a complete identification of dispatch system.

(2) Except as provided in paragraph (f) of this section, each unit or generator may be included in only one dispatch system.

(3) Any identification of dispatch system must be submitted by January 30 of the first year for which the identification is to be in effect. A designated representative may request, and the Administrator may grant at his or her discretion, an exemption allowing the submission of an identification of dispatch system after the otherwise applicable deadline for such submission.

(c) A complete identification of dispatch system shall include the following elements in a format prescribed by the Administrator:

(1) The name of the dispatch system.

(2) The list of all units and generators (including sulfur-free generators) in the dispatch system.

(3) The first calendar year for which the identification is to be in effect.

(4) The following statement: ''I certify that, except as otherwise required under a petition as approved under 40 CFR 72.33(f), the units and generators listed herein are and will continue to be interconnected and centrally dispatched, and will be treated as a dispatch system under 40 CFR 72.91 and 72.92, during the period that this identification of dispatch system is in effect. During such period, all information concerning these units and generators and contained in any submissions under 40 CFR 72.91 and 72.92 by me and the other designated representatives of these units shall be consistent and shall conform with the data in the dispatch system data reports under 40 CFR 72.92(b). I am aware of, and will comply with, the requirements imposed under 40 CFR 72.33(e)(2).''

(5) The signatures of the designated representative for each affected unit in the dispatch system.

(d) In order to change a unit's current dispatch system, complete identifications of dispatch system shall be submitted for the unit's current dispatch system and the unit's new dispatch system, reflecting the change.

(e)(1) Any unit or generator not listed in a complete identification of dispatch system that is in effect shall treat its utility system as its dispatch system and, if such unit or generator is listed in the NADB, shall treat the utility system reported under the data field ''UTILNAME'' of the NADB as its utility system.

(2) During the period that the identification of dispatch system is in effect all information that concerns the units and generators in a given dispatch system and that is contained in any submissions under §§ 72.91 and 72.92 by designated representative of these units shall be consistent and shall conform with the data in the dispatch system data reports under § 72.92(b). If this requirement is not met, the Administrator may reject all such submissions and require the designated representatives to make the submissions under §§ 72.91 and 72.92 (including the dispatch system data report) treating the utility system of each unit or generator as its respective dispatch system and treating the identification of dispatch system as no longer in effect.

(f)(1) Notwithstanding paragraph (e)(1) of this section or any submission of an identification of dispatch system

under paragraphs (b) or (d) of this section, the designated representative of a Phase I unit with two or more owners may petition the Administrator to treat, as the dispatch system for an owner's portion of the unit, the dispatch system of another unit.

(i) The owner's portion of the unit shall be based on one of the following apportionment methods:

(A) *Owner's share of the unit's capacity in 1985–1987.* Under this method, the baseline of the owner's portion of the unit shall equal the baseline of the unit multiplied by the average of the owner's percentage ownership of the capacity of the unit for each year during 1985–1987. The actual utilization of the owner's portion of the unit for a year in Phase I shall equal the actual utilization of the unit for the year that is attributed to the owner.

(B) *Owner's share of the unit's baseline.* Under this method, the baseline of the owner's portion of the unit shall equal the average of the unit's annual utilization in 1985–1987 that is attributed to the owner. The actual utilization of the owner's portion of the unit for a year in Phase I shall equal the actual utilization of the unit for the year that is attributed to the owner.

(ii) The annual or actual utilization of a unit shall be attributed, under paragraph (f)(1)(i) of this section, to an owner of the unit using accounting procedures consistent with those used to determine the owner's share of the fuel costs in the operation of the unit during the period for which the annual or actual utilization is being attributed.

(iii) Upon submission of the petition, the designated representative may not change the election of the apportionment method or the baseline of the owner's portion of the unit.

The same apportionment method must be used for all portions of the unit for all years in Phase I for which any petition under paragraph (f)(1) of this section is approved and in effect.

(2) The petition under paragraph (f)(1) of this section shall be submitted by January 30 of the first year for which the dispatch system proposed in the petition will take effect, if approved. A complete petition shall include the following elements in a format prescribed by the Administrator:

(i) The election of the apportionment method under paragraph (f)(1)(i) of this section.

(ii) The baseline of the owner's portion of the unit and the baseline of any other owner's portion of the unit for which a petition under paragraph (f)(1) of this section has been approved or has been submitted (and not disapproved) and a demonstration that the sum of such baselines and the baseline of any remaining portion of the unit equals 100 percent of the baseline of the unit. The designated representative shall also submit, upon request, either:

(A) Where the unit is to be apportioned under paragraph (f)(1)(i)(A) of this section, documentation of the average of the owner's percentage ownership of the capacity of the unit for each year during 1985–1987; or

(B) Where the unit is to be apportioned under paragraph (f)(1)(i)(B) of this section, documentation showing the attribution of the unit's utilization in 1985, 1986, and 1987 among the portions of the unit and the calculation of the annual average utilization for 1985–1987 for the portions of the unit.

(iii) The name of the proposed dispatch system and a list of all units (including portions of units) and generators in that proposed dispatch system and, upon request, documentation demonstrating that the owner's portion of the unit, along with the other units in the proposed dispatch system, are a group of all units and generators that are interconnected and centrally dispatched by a single utility company, the service company of a single holding company, or a single power pool.

(iv) The following statement, signed by the designated representatives of all units in the proposed dispatch system: ''I certify that the units and generators in the dispatch system proposed in this petition are and will continue to be interconnected and centrally dispatched, and will be treated as a dispatch system under 40 CFR 72.91 and 72.92, during the period that this petition, as approved, is in effect.''

(v) The following statement, signed by the designated representatives of all units in all dispatch systems that will include any portion of the unit if the

petition is approved: ''During the period that this petition, if approved, is in effect, all information that concerns the units and generators in any dispatch system including any portion of the unit apportioned under the petition and that is contained in any submissions under 40 CFR 72.91 and 72.92 by me and the other designated representatives of these units shall be consistent and shall conform to the data in the dispatch system data reports under 40 CFR 72.92(b). I am aware of, and will comply with, the requirements imposed under 40 CFR 72.33(f) (4) and (5).''

(3)(i) The Administrator will approve in whole, in part, or with changes or conditions, or deny the petition under paragraph (f)(1) of this section within 90 days of receipt of the petition. The Administrator will treat the petition, as changed or conditioned upon approval, as amending any identification of dispatch system that is submitted prior to the approval and includes any portion of the unit for which the petition is approved. Where any portion of a unit is not covered by an approved petition, that remaining portion of the unit shall continue to be part of the unit's dispatch system.

(ii) In approving the petition, the Administrator will determine, on a case-by-case basis, the proper calculation and treatment, for purposes of the reports required under §§ 72.91 and 72.92, of plan reductions and compensating generation provided to other units.

(4) The designated representative for the unit for which a petition is approved under paragraph (f)(3) of this section and the designated representatives of all other units included in all dispatch systems that include any portion of the unit shall submit all annual compliance certification reports, dispatch system data reports, and other reports required under §§ 72.91 and 72.92 treating, as a separate Phase I unit, each portion of the unit for which a petition is approved under paragraph (f)(3) of this section and the remaining portion of the unit. The reports shall include all required calculations and demonstrations, treating each such portion of the unit as a separate Phase I unit. Upon request, the designated representatives shall demonstrate that the data in all the reports under §§ 72.91 and 72.92 has been properly attributed or apportioned among the portions of the unit and the dispatch systems and that there is no undercounting or double-counting with regard to such data.

(i) The baseline of each portion of the unit for which a petition is approved shall be determined under paragraphs (f)(1) (i) and (ii) of this section. The baseline of the remaining portion of such unit shall equal the baseline of the unit less the sum of the baselines of any portions of the unit for which a petition is approved.

(ii) The actual utilization of each portion of the unit for which a petition is approved shall be determined under paragraphs (f)(l) (i) and (ii) of this section. The actual utilization of the remaining portion of such unit shall equal the actual utilization of the unit less the sum of the actual utilizations of any portions of the unit for which a petition is approved. Upon request, the designated representative of the unit shall demonstrate in the annual compliance certification report that the requirements concerning calculation of actual utilization under paragraph (f)(1)(ii) and any requirements established under paragraph (f)(3) of this section are met.

(iii) Except as provided in paragraph (f)(5) of this section, the designated representative shall surrender for deduction the number of allowances calculated using the formula in § 72.92(c) and treating, as a separate Phase I unit, each portion of unit for which a petition is approved under paragraph (f)(3) of this section and the remaining portion of the unit.

(5) In the event that the designated representatives fail to make all the proper attributions, apportionments, calculations, and demonstrations under paragraph (f)(4) of this section and §§ 72.91 and 72.92, the Administrator may require that:

(i) All portions of the unit be treated as part of the dispatch system of the unit in accordance with paragraph (e)(1) of this paragraph and any identification of dispatch system submitted under paragraph (b) or (d) of this section;

(ii) The designated representatives make all submissions under §§ 72.91 and 72.92 (including the dispatch system

data report), treating the entire unit as a single Phase I unit, in accordance with paragraph (e)(1) of this paragraph and any identification of dispatch system submitted under paragraph (b) or (d) of this section; and

(iii) The designated representative surrender for deduction the number of allowances calculated, consistent with the reports under paragraph (f)(5)(ii) of this section and §§ 72.91 and 72.92, using the formula in § 72.92(c) and treating the entire unit as a single Phase I unit.

(6) The designated representative may submit a notification to terminate an approved petition by January 30 of the first year for which the termination is to take effect. The notification must be signed and certified by the designated representatives of all units included in all dispatch systems that include any portion of the unit apportioned under the petition. Upon receipt of the notification meeting the requirements of the prior two sentences by the Administrator, the approved petition is no longer in effect for that year and the remaining years in Phase I and the designated representatives shall make all submissions under §§ 72.91 and 72.92 treating the petition as no longer in effect for all such years.

(7) Except as expressly provided in paragraphs (f)(1) through (6) of this section or the Administrator's approval of the petition, all provisions of the Acid Rain Program applicable to an affected source or an affected unit shall apply to the entire unit regardless of whether a petition has been submitted or approved, or reports have been submitted, under such paragraphs. Approval of a petition under such paragraphs shall not constitute a determination of the percentage ownership in a unit under any other provision of the Acid Rain Program and shall not change the liability of the owners and operators of an affected unit that has excess emissions under § 72.9(e).

[58 FR 3650, Jan. 11, 1993, as amended at 60 FR 18468, Apr. 11, 1995; 62 FR 55481, Oct. 24, 1997]

Subpart D—Acid Rain Compliance Plan and Compliance Options

§ 72.40 General.

(a) For each affected unit included in an Acid Rain permit application, a complete compliance plan shall:

(1) For sulfur dioxide emissions, certify that, as of the allowance transfer deadline, the designated representative will hold allowances in the compliance account of the source where the unit is located (after deductions under § 73.34(c) of this chapter) not less than the total annual emissions of sulfur dioxide from the affected units at the source. The compliance plan may also specify, in accordance with this subpart, one or more of the Acid Rain compliance options.

(2) For nitrogen oxides emissions, certify that the unit will comply with the applicable emission limitation under § 76.5, § 76.6, or § 76.7 of this chapter or shall specify one or more Acid Rain compliance options, in accordance with part 76 of this chapter.

(b) *Multi-unit compliance options.* (1) A plan for a compliance option, under § 72.41, § 72.42, § 72.43, or § 72.44 of this part, under § 74.47 of this chapter, or a NO_X averaging plan under § 76.11 of this chapter, that includes units at more than one affected source shall be complete only if:

(i) Such plan is signed and certified by the designated representative for each source with an affected unit governed by such plan; and

(ii) A complete permit application is submitted covering each unit governed by such plan.

(2) A permitting authority's approval of a plan under paragraph (b)(1) of this section that includes units in more than one State shall be final only after every permitting authority with jurisdiction over any such unit has approved the plan with the same modifications or conditions, if any.

(c) *Conditional Approval.* In the compliance plan, the designated representative of an affected unit may propose, in accordance with this subpart, any Acid Rain compliance option for conditional approval, except a Phase I extension plan; *provided* that an Acid Rain compliance option under section 407 of

the Act may be conditionally proposed only to the extent provided in part 76 of this chapter.

(1) To activate a conditionally-approved Acid Rain compliance option, the designated representative shall notify the permitting authority in writing that the conditionally-approved compliance option will actually be pursued beginning January 1 of a specified year. If the conditionally approved compliance option includes a plan described in paragraph (b)(1) of this section, the designated representative of each source governed by the plan shall sign and certify the notification. Such notification shall be subject to the limitations on activation under subpart D of this part and part 76 of this chapter.

(2) The notification under paragraph (c)(1) of this section shall specify the first calendar year and the last calendar year for which the conditionally approved Acid Rain compliance option is to be activated. A conditionally approved compliance option shall be activated, if at all, before the date of any enforceable milestone applicable to the compliance option. The date of activation of the compliance option shall not be a defense against failure to meet the requirements applicable to that compliance option during each calendar year for which the compliance option is activated.

(3) Upon submission of a notification meeting the requirements of paragraphs (c) (1) and (2) of this section, the conditionally-approved Acid Rain compliance option becomes binding on the owners and operators and the designated representative of any unit governed by the conditionally-approved compliance option.

(4) A notification meeting the requirements of paragraphs (c) (1) and (2) of this section will revise the unit's permit in accordance with § 72.83 (administrative permit amendment).

(d) *Termination of compliance option.* (1) The designated representative for a unit may terminate an Acid Rain compliance option by notifying the permitting authority in writing that an approved compliance option will be terminated beginning January 1 of a specified year. If the compliance option includes a plan described in paragraph (b)(1) of this section, the designated representative for each source governed by the plan shall sign and certify the notification. Such notification shall be subject to the limitations on termination under subpart D of this part and part 76 of this chapter.

(2) The notification under paragraph (d)(1) of this section shall specify the calendar year for which the termination will take effect.

(3) Upon submission of a notification meeting the requirements of paragraphs (d) (1) and (2) of this section, the termination becomes binding on the owners and operators and the designated representative of any unit governed by the Acid Rain compliance option to be terminated.

(4) A notification meeting the requirements of paragraphs (d) (1) and (2) of this section will revise the unit's permit in accordance with § 72.83 (administrative permit amendment).

[58 FR 3650, Jan. 11, 1993, as amended at 60 FR 17113, Apr. 4, 1995; 62 FR 55481, Oct. 24, 1997; 64 FR 25842, May 13, 1999; 70 FR 25334, May 12, 2005]

§ 72.41 Phase I substitution plans.

(a) *Applicability.* This section shall apply during Phase I to the designated representative of:

(1) Any unit listed in table 1 of § 73.10(a) of this chapter; and

(2) Any other existing utility unit that is an affected unit under this part, provided that this section shall not apply to a unit under section 410 of the Act.

(b)(1) The designated representative may include, in the Acid Rain permit application for a unit under paragraph (a)(1) of this section, a substitution plan under which one or more units under paragraph (a)(2) of this section are designated as substitution units, provided that:

(i) Each unit under paragraph (a)(2) of this section is under the control of the owner or operator of each unit under paragraph (a)(1) of this section that designates the unit under paragraph (a)(2) of this section as a substitution unit; and

(ii) In accordance with paragraph (c)(3) of this section, the emissions reductions achieved under the plan shall be the same or greater than would have

been achieved by all units governed by the plan without such plan.

(2) The designated representative of each source with a unit designated as a substitution unit in any plan submitted under paragraph (b)(1) of this section shall incorporate in the permit application each such plan.

(3) The designated representative may submit a substitution plan not later than 6 months (or 90 days if submitted in accordance with § 72.82), or a notification to activate a conditionally approved plan in accordance with § 72.40(c) not later than 60 days, before the allowance transfer deadline applicable to the first year for which the plan is to take effect.

(c) *Contents of a substitution plan.* A complete substitution plan shall include the following elements in a format prescribed by the Administrator:

(1) Identification of each unit under paragraph (a)(1) of this section and each substitution unit to be governed by the substitution plan. A unit shall not be a substitution unit in more than one substitution plan.

(2) Except where the designated representative requests conditional approval of the plan, the first calendar year and, if known, the last calendar year in which the substitution plan is to be in effect. Unless the designated representative specifies an earlier calendar year, the last calendar year will be deemed to be 1999.

(3) Demonstration that the total emissions reductions achieved under the substitution plan will be equal to or greater than the total emissions reductions that would have been achieved without the plan, as follows:

(i) For each substitution unit:

(A) The unit's baseline.

(B) Each of the following: the unit's 1985 actual SO_2 emissions rate; the unit's 1985 allowable SO_2 emissions rate; the unit's 1989 actual SO_2 emissions rate; the unit's 1990 actual SO_2 emissions rate; and, as of November 15, 1990, the most stringent unit-specific federally enforceable or State enforceable SO_2 emissions limitation covering the unit for 1995–1999. For purposes of determining the most stringent emissions limitation, applicable emissions limitations shall be converted to lbs/mmBtu in accordance with appendix B of this part. Where the most stringent emissions limitation is not the same for every year in 1995–1999, the most stringent emissions limitation shall be stated separately for each year.

(C) The lesser of: the unit's 1985 actual SO_2 emissions rate; the unit's 1985 allowable SO_2 emissions rate; the greater of the unit's 1989 or 1990 actual SO_2 emissions rate; or, as of November 15, 1990, the most stringent unit-specific federally enforceable or State enforceable SO_2 emissions limitation covering the unit for 1995–99. Where the most stringent emissions limitation is not the same for every year during 1995–1999, the lesser of the emissions rates shall be determined separately for each year using the most stringent emissions limitation for that year.

(D) The product of the baseline in paragraph (c)(3)(i)(A) of this section and the emissions rate in paragraph (c)(3)(i)(C) of this section, divided by 2000 lbs/ton. Where the most stringent emissions limitation is not the same for every year during 1995–1999, the product in the prior sentence shall be calculated separately for each year using the emissions rate determined for that year in paragraph (c)(3)(i)(C) of this section.

(ii)(A) The sum of the amounts in paragraph (c)(3)(i)(D) of this section for all substitution units to be governed by the plan. Except as provided in paragraph (c)(3)(ii)(B) of this section, this sum is the total number of allowances available each year under the substitution plan.

(B) Where the most stringent unit-specific federally enforceable or State enforceable SO_2 emissions limitation is not the same for every year during 1995–1999, the sum in paragraph (c)(3)(ii)(A) of this section shall be calculated separately for each year using the amounts calculated for that year in paragraph (c)(3)(i)(D) of this section. Each separate sum is the total number of allowances available for the respective year under the substitution plan.

(iii) Where, as of November 15, 1990, a non-unit-specific federally enforceable or State enforceable SO_2 emissions limitation covers the unit for any year

during 1995–1999, the designated representative shall state each such limitation and propose a method for applying the unit-specific and non-unit-specific emissions limitations under paragraph (d) of this section.

(4) Distribution of substitution allowances. (i) A statement that the allowances in paragraph (c)(3)(ii) of this section are not to be distributed to any units under paragraph (a)(1) of this section that are to be governed by the plan; or

(ii) A list showing any annual distribution of the allowances in paragraph (c)(3)(ii) of this section from a substitution unit to a unit under paragraph (a)(1) of this section that, under the plan, designates the substitution unit.

(5) A demonstration that the substitution plan meets the requirement that each unit under paragraph (a)(2) of this section is under the control of the owner or operator of each unit under paragraph (a)(1) of this section that designates the unit under paragraph (a)(2) of this section as a substitution unit. The demonstration shall be one of the following:

(i) If the unit under paragraph (a)(1) of this section has one or more owners or operators that have an aggregate percentage ownership interest of 50 percent or more in the capacity of the unit under paragraph (a)(2) of this section or the units have a common operator, a statement identifying such owners or operators and their aggregate percentage ownership interest in the capacity of the unit under paragraph (a)(2) of this section or identifying the units' common operator. The designated representative shall submit supporting documentation upon request by the Administrator.

(ii) If the unit under paragraph (a)(1) of this section has one or more owners or operators that have an aggregate percentage ownership interest of at least 10 percent and less than 50 percent in the capacity of the unit under paragraph (a)(2) of this section and the units do not have a common operator, a statement identifying such owners or operators and their aggregate percentage ownership interest in the capacity of the unit under paragraph (a)(2) of this section and stating that each such owner or operator has the contractual right to direct the dispatch of the electricity that, because of its ownership interest, it has the right to receive from the unit under paragraph (a)(2) of this section. The fact that the electricity that such owner or operator has the right to receive is centrally dispatched through a power pool will not be the basis for determining that the owner or operator does not have the contractual right to direct the dispatch of such electricity. The designated representative shall submit supporting documentation upon request by the Administrator.

(iii) A copy of an agreement that is binding on the owners and operators of the unit under paragraph (a)(2) of this section and the owners and operators of the unit under paragraph (a)(1) of this section, provides each of the following elements, and is supported by documentation meeting the requirements of paragraph (c)(6) of this section:

(A) The owners and operators of the unit under paragraph (a)(2) of this section must not allow the unit to emit sulfur dioxide in excess of a maximum annual average SO_2 emissions rate (in lbs/mmBtu), specified in the agreement, for each year during the period that the substitution plan is in effect.

(B) The maximum annual average SO_2 emissions rate for the unit under paragraph (a)(2) of this section shall not exceed 70 percent of the lesser of: the unit's 1985 actual SO_2 emissions rate; the unit's 1985 allowable SO_2 emissions rate; the greater of the unit's 1989 or 1990 actual SO_2 emissions rate; the most stringent federally enforceable or State enforceable SO_2 emissions limitation, as of November 15, 1990, applicable to the unit in Phase I; or the lesser of the average actual SO_2 emissions rate or the most stringent federally enforceable or State enforceable SO_2 emissions limitation for the unit for four consecutive quarters that immediately precede the 30-day period ending on the date the substitution plan is submitted to the Administrator. If the unit is covered by a non-unit-specific federally enforceable or State enforceable SO_2 emissions limitation in the four consecutive quarters or, as of November 15, 1990, in Phase I,

the Administrator will determine, on a case-by-case basis, how to apply the non-unit-specific emissions limitation for purposes of determining whether the maximum annual average SO_2 emissions rate meets the requirement of the prior sentence. If a non-unit-specific federally enforceable SO_2 emissions limitation is not different from a non-unit-specific federally enforceable SO_2 emissions limitation that was effective and applicable to the unit in 1985, the Administrator will apply the non-unit-specific SO_2 emissions limitation by using the 1985 allowable SO_2 emissions rate.

(C) For each year that the actual SO_2 emissions rate of the unit under paragraph (a)(2) of this section exceeds the maximum annual average SO_2 emissions rate, the designated representative of the unit under paragraph (a)(1) of this section must surrender allowances for deduction from the Allowance Tracking System account of the unit under paragraph (a)(1) of this section. The designated representative shall surrender allowances authorizing emissions equal to the baseline of the unit under paragraph (a)(2) of this section multiplied by the difference between the actual SO_2 emissions rate of the unit under paragraph (a)(2) of this section and the maximum annual average SO_2 emissions rate and divided by 2000 lbs/ton. The surrender shall be made by the allowance transfer deadline of the year of the exceedance, and the surrendered allowances shall have the same or an earlier compliance use date as the allowances allocated to the unit under paragraph (a)(2) of this section for that year. The designated representative may identify the serial numbers of the allowances to be deducted. In the absence of such identification, allowances will be deducted on a first-in, first-out basis under § 73.35(c)(2) of this chapter.

(D) The unit under paragraph (a)(2) of this section and the unit under paragraph (a)(1) of this section shall designate a common designated representative during the period that the substitution plan is in effect. Having a common alternate designated representative shall not satisfy the requirement in the prior sentence.

(E) Except as provided in paragraph (c)(6)(i) of this section, the actual SO_2 emissions rate for any year and the average actual SO_2 emissions rate for any period shall be determined in accordance with part 75 of this chapter.

(6) A demonstration under paragraph (c)(5)(iii) of this section shall include the following supporting documentation:

(i) The calculation of the average actual SO_2 emissions rate and the most stringent federally enforceable or State enforceable SO_2 emissions limitation for the unit for the four consecutive quarters that immediately preceded the 30-day period ending on the date the substitution plan is submitted to the Administrator. To the extent that the four consecutive quarters include a quarter prior to January 1, 1995, the SO_2 emissions rate for the quarter shall be determined applying the methodology for calculating SO_2 emissions set forth in appendix C of this part. This methodology shall be applied using data submitted for the quarter to the Secretary of Energy on United States Department of Energy Form 767 or, if such data has not been submitted for the quarter, using the data prepared for such submission for the quarter.

(ii) A description of the actions that will be taken in order for the unit under paragraph (a)(2) of this section to comply with the maximum annual average SO_2 emissions rate under paragraph (c)(5)(iii) of this section.

(iii) A description of any contract for implementing the actions described in paragraph (c)(6)(ii) of this section that was executed before the date on which the agreement under paragraph (c)(5)(iii) of this section is executed. The designated representative shall state the execution date of each such contract and state whether the contract is expressly contingent on the agreement under paragraph (c)(5)(iii) of this section.

(iv) A showing that the actions described under paragraph (c)(6)(ii) of this section will not be implemented during Phase I unless the unit is approved as a substitution unit.

(7) The special provisions in paragraph (e) of this section.

(d) *Administrator's action.* (1) If the Administrator approves a substitution plan, he or she will allocate allowances to the Allowance Tracking System accounts of the units under paragraph (a)(1) of this section and substitution units, as provided in the approved plan, upon issuance of an Acid Rain permit containing the plan, except that if the substitution plan is conditionally approved, the allowances will be allocated upon revision of the permit to activate the plan.

(2) In no event shall allowances be allocated to a substitution unit, under an approved substitution plan, for any year in excess of the sum calculated and applicable to that year under paragraph (c)(3)(ii) of this section, as adjusted by the Administrator in approving the plan.

(3) Where, as of November 15, 1990, a non-unit-specific federally enforceable or State enforceable SO_2 emissions limitation covers the unit for any year during 1995–1999, the Administrator will specify on a case-by-case basis a method for using unit-specific and non-unit-specific emissions limitations in allocating allowances to the substitution unit. The specified method will not treat a non-unit-specific emissions limitation as a unit-specific emissions limitation and will not result in substitution units retaining allowances allocated under paragraph (d)(1) of this section for emissions reductions necessary to meet a non-unit- specific emissions limitation. Such method may require an end-of-year review and the adjustment of the allowances allocated to the substitution unit and may require the designated representative of the substitution unit to surrender allowances by the allowance transfer deadline of the year that is subject to the review. Any surrendered allowances shall have the same or an earlier compliance use date as the allowances originally allocated for the year, and the designated representative may identify the serial numbers of the allowances to be deducted. In the absence of such identification, such allowances will be deducted on a first-in, first-out basis under § 73.35(c)(2) of this chapter.

(e) *Special provisions*—(1) *Emissions Limitations.* (i) Each substitution unit governed by an approved substitution plan shall become a Phase I unit from January 1 of the year for which the plan takes effect until January 1 of the year for which the plan is no longer in effect or is terminated. The designated representative of a substitution unit shall surrender allowances, and the Administrator will deduct allowances, in accordance with paragraph (d)(3) of this section.

(ii) Each unit under paragraph (a)(1) of this section, and each substitution unit, governed by an approved substitution plan shall be subject to the Acid Rain emissions limitations for nitrogen oxides in accordance with part 76 of this chapter.

(iii) Where an approved substitution plan includes a demonstration under paragraphs (c)(5)(iii) and (c)(6) of this section.

(A) The owners and operators of the substitution unit covered by the demonstration shall implement the actions described under paragraph (c)(6)(ii) of this section, as adjusted by the Administrator in approving the plan or in revising the permit. The designated representative may submit proposed permit revisions changing the description of the actions to be taken in order for the substitution unit to achieve the maximum annual average SO_2 emissions rate under the approved plan and shall include in any such submission a showing that the actions in the changed description will not be implemented during Phase I unless the unit remains a substitution unit. The permit revision will be treated as an administrative amendment, except where the Administrator determines that the change in the description alters the fundamental nature of the actions to be taken and that public notice and comment will contribute to the decision-making process, in which case the permit revision will be treated as a permit modification or, at the option of the designated representative, a fast-track modification.

(B) The designated representative of the unit under paragraph (a)(1) of this section shall surrender allowances, and theAdministrator will deduct allowances, in accordance with paragraph (c)(5)(iii)(C) of this section. The surrender and deduction of allowances as required under the prior sentence shall

be the only remedy under the Act for a failure to meet the maximum annual average SO_2 emissions rate, provided that, if such deduction of allowance results in excess emissions, the remedies for excess emissions shall be fully applicable.

(2) *Liability*. The owners and operators of a unit governed by an approved substitution plan shall be liable for any violation of the plan or this section at that unit or any other unit that is the first unit's substitution unit or for which the first unit is a substitution unit under the plan, including liability for fulfilling the obligations specified in part 77 of this chapter and section 411 of the Act.

(3) *Termination*. (i) A substitution plan shall be in effect only in Phase I for the calendar years specified in the plan or until the calendar year for which a termination of the plan takes effect, provided that no substitution plan shall be terminated, and no unit shall be de-designated as a substitution unit, before the end of Phase I if the substitution unit serves as a control unit under a Phase I extension plan.

(ii) To terminate a substitution plan for a given calendar year prior to the last year for which the plan was approved:

(A) A notification to terminate in accordance with § 72.40(d) shall be submitted no later than 60 days before the allowance transfer deadline applicable to the given year; and

(B) In the notification to terminate, the designated representative of each unit governed by the plan shall state that he or she surrenders for deduction from the unit's Allowance Tracking System account allowances equal in number to, and with the same or an earlier compliance use date as, those allocated under paragraph (d)(1) of this section for all calendar years for which the plan is to be terminated. The designated representative may identify the serial numbers of the allowances to be deducted. In the absence of such identification, allowances will be deducted on a first-in, first-out basis under § 73.35(c)(2) of this chapter.

(iii) If the requirements of paragraph (e)(3)(ii) of this section are met and upon revision of the permit to terminate the substitution plan, the Administrator will deduct the allowances specified in paragraph (e)(3)(ii)(B) of this section. No substitution plan shall be terminated, and no unit shall be de-designated as a Phase I unit, unless such deduction is made.

(iv)(A) If there is a change in the ownership interest of the owners or operators of any unit under a substitution plan approved as meeting the requirements of paragraph (c)(5)(i) or (ii) of this section or a change in such owners' or operators' right to direct dispatch of electricity from a substitution unit under such a plan and the demonstration under paragraph (c)(5)(i) or (ii) of this section cannot be made, then the designated representatives of the units governed by this plan shall submit a notification to terminate the plan so that the plan will terminate as of January 1 of the calendar year during which the change is made.

(B) Where a substitution plan is approved as meeting the requirements of paragraph (c)(5)(iii) of this section, if there is a change in the agreement under paragraph (c)(5)(iii) of this section and a demonstration that the agreement, as changed, meets the requirements of paragraph (c)(5)(iii) cannot be made, then the designated representative of the units governed by the plan shall submit a notification to terminate the plan so that the plan will terminate as of January 1 of the calendar year during which the change is made. Where a substitution plan is approved as meeting the requirements of paragraph (c)(5)(iii) of this section, if the requirements of the first sentence of paragraph (e)(1)(iii)(A) of this section are not met during a calendar year, then the designated representative of the units governed by the plan shall submit a notification to terminate the plan so that the plan will terminate as of January 1 of such calendar year.

(C) If the plan is not terminated in accordance with paragraphs (e)(3)(iv)(A) or (B) of this section, the Administrator, on his or her own motion, will terminate the plan and deduct the allowances required to be surrendered under paragraph (e)(3)(ii) of this section.

(D) Where a substitution unit and the Phase I unit designating the substitution unit in an approved substitution plan have a common owner, operator, or designated representative during a year, the plan shall not be terminated under paragraphs (e)(3)(iv)(A), (B), or (C) of this section with regard to the substitution unit if the year is as specified in paragraph (e)(3)(iv)(D)(*1*) or (*2*) of this section and the unit received from the Administrator for the year, under the Partial Settlement in *Environmental Defense Fund* v. *Carol M. Browner*, No. 93–1203 (D.C. Cir. 1993) (signed May 4, 1993), a total number of allowances equal to the unit's baseline multiplied by the lesser of the unit's 1985 actual SO_2 emissions rate or 1985 allowable SO_2 emissions rate.

(*1*) Except as provided in paragraph (e)(3)(iv)(D)(*2*) of this section, paragraph (e)(3)(iv)(D) of this section shall apply to the first year in Phase I for which the unit is and remains an active substitution unit.

(*2*) If the unit has a Group 1 boiler under part 76 of this chapter and is and remains an active substitution unit during 1995, paragraph (e)(3)(iv)(D) of this section shall apply to 1995 and to the second year in Phase I for which the unit is and remains an active substitution unit.

(*3*) If there is a change in the owners, operators, or designated representative of the substitution unit or the Phase I unit during a year under paragraph (e)(3)(iv)(D)(*1*) or (*2*) of this section and, with the change, the units do not have a common owner, operator, or designated representative, then the designated representatives for such units shall submit a notification to terminate the plan so that the plan will terminate as of January 1 of the calendar year during which the change is made. If the plan is not terminated in accordance with the prior sentence, the Administrator, on his or her own motion, will terminate the plan and deduct the allowances required to be surrendered under paragraph (e)(3)(ii) of this section.

[58 FR 3650, Jan. 11, 1993, as amended at 58 FR 40747, July 30, 1993; 59 FR 60230, 60238, Nov. 22, 1994; 62 FR 55481, Oct. 24, 1997]

§ 72.42 Phase I extension plans.

(a) *Applicability*. (1) This section shall apply to any designated representative seeking a 2-year extension of the deadline for meeting Phase I sulfur dioxide emissions reduction requirements at any of the following types of units by applying for allowances from the Phase I extension reserve:

(i) A unit listed in table 1 of § 73.10(a) of this chapter;

(ii) A unit designated as a substitution unit in accordance with § 72.41; or

(iii) A unit designated as a compensating unit in accordance with § 72.43, except a compensating unit that is a new unit.

(2) A unit for which a Phase I extension is sought shall be either:

(i) A control unit, which shall be a unit under paragraph (a)(1) of this section and at which qualifying Phase I technology shall commence operation on or after November 15, 1990 but not later than December 31, 1996; or

(ii) A transfer unit, which shall be a unit under paragraph (a)(1)(i) of this section and whose Phase I emissions reduction obligation shall be transferred in whole or in part to one or more control units.

(3) A Phase I extension does not exempt the owner or operator for any unit governed by the Phase I extension plan from the requirement to comply with such unit's Acid Rain emissions limitations for sulfur dioxide.

(b) To apply for a Phase I extension:

(1) The designated representative for each source with a control unit may submit an early ranking application for a Phase I extension plan in person, beginning on the 40th day after publication of this subpart in the FEDERAL REGISTER, between the hours of 9 a.m. and 5 p.m. Eastern Standard Time at Acid Rain Division, Attn: Early Ranking, U.S. Environmental Protection Agency, 501 3rd Street NW., 4th floor, Washington, DC; or send the application by regular mail, certified mail, or overnight delivery service to Acid Rain Division, Attn: Early Ranking, U.S. Environmental Protection Agency, 6204 J, 1200 Pennsylvania Ave., NW., Washington, DC 20460.

(2) By February 15, 1993:

(i) The designated representative for each source with a control unit shall submit a Phase I extension plan as a part of the Acid Rain permit application for the source, and

(ii) The designated representative for each source with a unit designated as a transfer unit in any plan submitted under paragraph (b)(2)(i) of this section shall incorporate in the Acid Rain permit application each such plan.

(c) *Contents of early ranking application.* A complete early ranking application shall include the following elements in a format prescribed by the Administrator:

(1) Identification of each control unit. All control units in an application must be located at the same source. If the control unit is not a unit under paragraph (a)(1)(i) of this section, a substitution plan or a reduced utilization plan governing the unit shall be submitted by the deadline for submitting a Phase I permit application.

(2) Identification of each transfer unit. A unit shall not be a transfer unit in more than one early ranking application.

(3) For each control and transfer unit, the total tonnage of sulfur dioxide emitted in 1988 plus the total tonnage of sulfur dioxide emitted in 1989, divided by 2. The 1988 and 1989 tonnage figures shall be consistent with the data filed on EIA form 767 for those years and the conversion methodology specified in appendix B of this part.

(4) For each control and transfer unit:

(i) The projected annual utilization (in mmBtu) for 1995 multiplied by the projected uncontrolled emissions rate (*i.e.*, the emissions rate in the absence of title IV of the Act) for 1995 (in lbs/mmBtu), divided by 2000 lbs/ton.

(ii) The projected annual utilization (in mmBtu) for 1996 multiplied by the projected uncontrolled emissions rate (*i.e.*, the emissions rate in the absence of title IV of the Act) for 1996 (in lbs/mmBtu), divided by 2000 lbs/ton.

(5) For each control and transfer unit, the number of Phase I extension reserve allowances requested for 1995 and for 1996, not to exceed the difference between:

(i) The lesser of the value for the unit under paragraph (c)(3) of this section and the value for the unit for that year under paragraph (c)(4) of this section, and

(ii) Each unit's baseline multiplied by 2.5 lb/mmBtu, divided by 2000 lbs/ton.

(6) Documentation that the annual emissions reduction obligations transferred from all transfer units to all control units do not exceed those authorized under this section, as follows:

(i) For each control unit, the difference, calculated separately for 1995 and 1996, between:

(A) The control unit's allowance allocation in table 1 of § 73.10(2) of this chapter, the allocation under § 72.41 if the control unit is a substitution unit, or the allocation under § 72.43 if the control unit is a compensating unit; and

(B) The projected emissions resulting from 90% control after installing the qualifying Phase I technology, i.e., 10% of the projected uncontrolled emissions for the control unit for the year in accordance with paragraph (c)(4) of this section.

(ii) The sum, by year, of the results under paragraph (c)(6)(i) of this section for all control units.

(iii) The sum, by year, of Phase I extension reserve allowances requested for all transfer units.

(iv) A showing that, for each year, the sum under paragraph (c)(6)(ii) of this section is greater than or equal to the sum under paragraph (c)(6)(iii) of this section.

(7) For each control and transfer unit, the projected controlled emissions for 1997, for 1998, and for 1999 calculated as follows:

Projected annual utilization (in mmBtu) multiplied by the projected controlled emission rate (in lbs/mmBtu), divided by 2000 lbs/ton.[1]

[1] In the case of a transfer unit that shares a common stack with a unit not listed in table 1 of § 73.10(a) of this chapter and whose emissions of sulfur dioxide are not monitored separately or apportioned in accordance with part 75 of this chapter, the projected figures for the transfer unit under paragraph (c)(7) of this section must be for the units combined.

(8) For each control unit, the number of Phase I extension reserve allowances requested for 1997, for 1998, and for 1999, calculated as follows:

The unit's baseline multiplied by 1.2 lbs/mmBtu and divided by 2000 lbs/ton, minus the projected controlled emissions (in tons/yr) under paragraph (c)(7) of this section for the given year.

(9) The total of Phase I extension reserve allowances requested for all units in the plan for 1995 through 1999.

(10) With regard to each executed contract for the design engineering and construction of qualifying Phase I technology at each control unit governed by the early ranking application, either a copy of the contract or a certification that the contract is on site at the source and will be submitted to the Administrator upon written request. The contract or contracts may be contingent on the Administrator approving the Phase I extension plan.

(11) For each contract for which a certification is submitted under paragraph (c)(10) of this section, a binding letter agreement, signed and dated by each party and specifying:

(i) The type of qualifying Phase I technology to which the contract applies;

(ii) The parties to the contract;

(iii) The date each party executed the contracts;

(iv) The unit to which the contract applies;

(v) A brief list identifying each provision of the contract;

(vi) Any dates to which the parties agree, including construction completion date; and

(vii) The total dollar amount of the contract.

(12) A vendor certification of the sulfur dioxide removal efficiency guaranteed to be achievable by the qualifying Phase I technology for the type and range of fossil fuels (before any treatment prior to combustion) that will be used at the control unit; *provided* that a vendor certification shall not be a defense against a control unit's failure to achieve 90% control of sulfur dioxide.

(13) The date (not later than December 31, 1996) on which the owners and operators plan to commence operation of the qualifying Phase I technology.

(14) The special provisions of paragraph (f) of this section.

(d) *Contents of Phase I extension plan.* A complete Phase I extension plan shall include the following elements in a format prescribed by the Administrator:

(1) Identification of each unit in the plan.

(2)(i) A statement that the elements in the Phase I extension plan are identical to those in the previously submitted early ranking application for the plan and that such early ranking application is incorporated by reference; or

(ii) All elements that are different from those in the previously submitted early ranking application for the plan and a statement that the early ranking application is incorporated by reference as modified by the newly submitted elements; *provided* that the Phase I extension plan shall not add any new control units or increase the total Phase I extension allowances requested; or

(iii) All elements required for an early ranking application and a statement that no early ranking application for the plan was submitted.

(e) *Administrator's action*—(1) *Early ranking applications.* (i) The Administrator may approve in whole or in part or with changes or conditions, as appropriate, or disapprove an early ranking application.

(ii) The Administrator will act on each early ranking application in the order of receipt.

(iii) The Administrator will determine the order of receipt by the following procedures:

(A) Hand-delivered submissions and mailed submissions will be deemed to have been received on the date they are received by the Administrator; *provided* that all submissions received by the Administrator prior to the 40th day after publication of this subpart in the FEDERAL REGISTER will be deemed received on the 40th day.

(B) All submissions received by the Administrator on the same day will be deemed to have been received simultaneously.

(C) The order of receipt of all submissions received simultaneously will be

determined by a public lottery if allocation of Phase I extension reserve allowances to each of the simultaneous submissions would result in oversubscription of the Phase I extension reserve.

(iv) Based on the allowances requested under paragraph (c)(9) of this section, as adjusted by the Administrator in approving the early ranking application, the Administrator will award Phase I extension reserve allowances for each complete early ranking application to the extent that allowances that have not been awarded remain in the Phase I extension reserve at the time the Administrator acts on the application. The allowances will be awarded in accordance with the procedures set forth the allocation of reserve allowances in paragraph (e)(3) of this section.

(v) The Administrator's action on an early ranking application shall be conditional on the Administrator's action on a timely and complete Acid Rain permit application that includes a complete Phase I extension plan and, where the plan includes a unit under paragraph (a)(1) (ii) and (iii) of this section, a complete substitution plan or reduced utilization plan, as appropriate.

(vi) Not later than 15 days after receipt of each early ranking application, the Administrator will notify, in writing, the designated representative of each application of the date that the early ranking application was received and one of the following:

(A) The award of allowances if the application was complete and the Phase I extension reserve as not oversubscribed;

(B) A determination that the application was incomplete and is disapproved; or

(C) If the Phase I extension reserve was oversubscribed, a list of the applications received on that date, the number of Phase I extension allowances requested in each application, and the date, time, and location of a lottery to determine the order of receipt for all applications received on that date.

(vii) The date of a lottery for all applications received on a given day will not be earlier than 15 days after the Administrator notifies each designated representative whose applications were received on that date.

(viii) Any early ranking application may be withdrawn from the lottery if a letter signed by the designated representative of each unit governed by the application and requesting withdrawal is received by the Administrator before the lottery takes place.

(2) *Phase I extension plans.* (i) The Administrator will act on each Phase I extension plan in the order that the early ranking application for that plan was received or, if no early ranking application was received, in the order that the Phase I extension plan was received, as determined under paragraph (e)(1)(iii) of this section.

(ii) Based on the allowances requested under paragraph (c)(9) of this section, as adjusted under paragraph (d) of this section and by the Administrator in approving the Phase I extension plan, the Administrator will allocate Phase I extension reserve allowances to the Allowance Tracking System account of each control and transfer unit upon issuance of an Acid Rain permit containing the approved Phase I extension plan. The allowances will be allocated using the procedures set forth in paragraph (e)(3) of this section.

(iii) The Administrator will not approve a Phase I extension plan, even if it meets the requirements of this section, unless unallocated allowances remain in the Phase I extension reserve at the time the Administrator acts on the plan.

(3) *Allowance allocations.* In addition to any allowances allocated in accordance with table 1 of § 73.10(a) of this chapter and other approved compliance options, the Administrator will allocate Phase I extension reserve allowances to each eligible unit in a Phase I extension plan in the following order.

(i) For 1995, to each control unit in the order in which it is listed in the plan and then to each transfer unit in the order in which it is listed.

(ii) For 1996, to each control unit in the order in which it is listed in the plan and then to each transfer unit in the order in which it is listed.

(iii) For 1997, to each control unit in the order in which it is listed in the plan, then likewise for 1998, and then likewise for 1999.

(iv) The Administrator will allocate any Phase I extension reserve allowances returned to the Administrator to the next Phase I extension plan, in the rank order established under paragraph (e)(1)(iii) of this section, that continues to meet the requirements of this section and this part.

(f) *Special provisions*—(1) *Emissions Limitations*—(i) *Sulfur Dioxide*.(A) If a control or transfer unit governed by an approved Phase I extension plan emits in 1997, 1998, or 1999 sulfur dioxide in excess of the projected controlled emissions for the unit specified for the year under paragraph (c)(7) of this section as adjusted under paragraph (d) of this section and by the Administrator in approving the Phase I extension plan, the Administrator will deduct allowances equal to such exceedence from the unit's annual allowance allocation in the following calendar year.[2]

(B) Failure to demonstrate at least a 90% reduction of sulfur dioxide in 1997, 1998, or 1999 in accordance with part 75 of this chapter at a control unit governed by an approved Phase I extension plan shall be a violation of this section. In the event of any such violation, in addition to any other liability under the Act, the Administrator will deduct allowances from the control unit's compliance subaccount for the year of the violation. The deduction will be calculated as follows:

Allowances deducted = (1 − (percent reduction achieved · 90%)) × Phase I extension reserve allowances received

where:

''Percent reduction achieved'' is the percent reduction determined in accordance with part 75 of this chapter.

''Phase I extension reserve allowances received'' is the number of Phase I extension reserve allowances allocated for the year under paragraph (e)(2)(ii) of this section.

[2] In the case of a transfer unit that shares a common stack with a unit not listed in table 1 of § 73.10(a) of this chapter where the units are not monitored separately or apportioned in accordance with part 75 of this chapter, the combined emissions of both units will be deemed to be the transfer unit's emissions for purposes of applying paragraph (f)(1)(i) of this section.

(ii) *Nitrogen Oxides*. (A) Beginning on January 1, 1997, each control and transfer unit shall be subject to the Acid Rain emissions limitations for nitrogen oxides.

(B) Notwithstanding paragraph (f)(1)(ii)(A) of this section, a transfer unit shall be subject to the Acid Rain emissions limitations for nitrogen oxides, under section 407 of the Act and regulations implementing section 407 of the Act, beginning on January 1 of any year for which a transfer unit is allocated fewer Phase I extension reserve allowances than the maximum amount that the designated representative could have requested in accordance with paragraph (c)(5) of this section (as adjusted under paragraph (d) of this section and by the Administrator in approving the Phase I extension plan) unless the transfer unit is the last unit allocated Phase I extension reserve allowances under the plan.

(2) *Monitoring requirements*. Each control unit shall comply with the special monitoring requirements for Phase I extension plans in accordance with part 75 of this chapter.

(3) *Reporting requirements*. Each control and transfer unit shall comply with the special reporting requirements for Phase I extension plans in accordance with § 72.93.

(4) *Liability*. The owners and operators of a control or transfer unit governed by an approved Phase I extension plan shall be liable for any violation of the plan or this section at that or any other unit governed by the plan, including liability for fulfilling the obligations specified in part 77 of this chapter and section 411 of the Act.

(5) *Termination*. A Phase I extension plan shall be in effect only in Phase I, and no Phase I extension plan shall be terminated before the end of Phase I. The designated representative may, however, withdraw a Phase I extension plan at any time prior to issuance of the Phase I Acid Rain permit that includes the Phase I extension plan, as adjusted.

§ 72.43 Phase I reduced utilization plans.

(a) *Applicability*. This section shall apply to the designated representative of:

(1) Any Phase I unit, including:

(i) Any unit listed in table 1 of § 73.10(a) of this chapter; and

(ii) Any other unit that becomes a Phase I unit (including any unit designated as a compensating unit under this section or a substitution unit under § 72.41).

(2) Any affected unit that:

(i) Is not otherwise subject to any Acid Rain emissions limitation or emissions reduction requirements during Phase I; and

(ii) Meets the requirement, as set forth in paragraphs (c)(4)(ii) and (d) of this section, that for each year for which the unit is to be covered by the reduced utilization plan, the unit's baseline divided by 2,000 lbs/ton and multiplied by the lesser of the unit's 1985 actual SO_2 emissions rate or 1985 allowable SO_2 emissions rate does not exceed the sum of

(A) The lesser of 10 percent of the amount under paragraph (a)(2)(ii) of this section or 200 tons, plus

(B) The unit's baseline divided by 2,000 lbs/ton and multiplied by the lesser of: The greater of the unit's 1989 or 1990 actual SO_2 emissions rate; or, as of November 15, 1990, the most stringent federally enforceable or State enforceable SO_2 emissions limitation covering the unit for 1995–1999.

(b)(1) The designated representative of any unit under paragraph (a)(1) of this section shall include in the Acid Rain permit application for the unit a reduced utilization plan, meeting the requirements of this section, when the owners and operators of the unit plan to:

(i) Reduce utilization of the unit below the unit's baseline to achieve compliance, in whole or in part, with the unit's Phase I Acid Rain emissions limitations for sulfur dioxide; and

(ii) Accomplish such reduced utilization through one or more of the following:

(A) Shifting generation of the unit to a unit under paragraph (a)(2) of this section or to a sulfur-free generator; or

(B) Using one or more energy conservation measures or improved unit efficiency measures.

(2)(i) Energy conservation measures shall be either demand-side measures implemented after December 31, 1987 in the residence or facility of a customer to whom the unit's utility system sells electricity or supply-side measures implemented after December 31, 1987 in facilities of the unit's utility system.

(ii) The utility system shall pay in whole or in part for the energy conservation measures either directly or, in the case of demand-side measures, through payment to another person who purchases the measure.

(iii) Energy conservation measures shall not include:

(A) Conservation programs that are exclusively informational or educational in nature;

(B) Load management measures that lead to reduction of electric energy demands during a utility's peak generating period, unless kilowatt hour savings can be verified under § 72.91(b); or

(C) Utilization of industrial waste gases, unless the designated representative certifies that there is no net increase in sulfur dioxide emissions from such utilization.

(iv) For calendar years when the unit's utility system is a subsidiary of a holding company and the unit's dispatch system is or includes all units that are interconnected and centrally dispatched and included in that holding company, then:

(A) Energy conservation measures shall be either demand-side measures implemented in the residence or facility of a customer to whom any utility system in the holding company sells electricity or supply-side measures implemented in facilities of any utility system in the holding company. Such utility system shall pay in whole or in part for the measures either directly or, in the case of demand-side measures, through payment to another person who purchases the measures.

(B) The limitations in paragraph (b)(2)(iii) of this section shall apply.

(3)(i) Improved unit efficiency measures shall be implemented in the unit after December 31, 1987. Such measures include supply-side measures listed in appendix A, section 2.1 of part 73 of this chapter.

(ii) The utility system shall pay in whole or in part for the improved unit efficiency measures.

(4) The requirement to submit a reduced utilization plan shall apply in

the event that the owners and operators of a Phase I unit decide, at any time during any Phase I calendar year, to rely on the method of compliance in paragraph (b)(1) of this section. In that case, the designated representative shall submit a reduced utilization plan not later than 6 months (or 90 days if sumitted in accordance with § 72.82 or § 72.83), or a notification to activate a conditionally approved plan in accordance with § 72.40(c) not later than 60 days, before the allowance transfer deadline applicable to the first year for which the plan is to take effect.

(5) The designated representative of each source with a unit designated as a compensating unit in any plan submitted under paragraphs (b) (1) or (4) of this section shall incorporate by reference in the permit application each such plan.

(c) *Contents of reduced utilization plan.* A complete reduced utilization plan shall include the following elements in a format prescribed by the Administrator:

(1) Identification of each Phase I unit for which the owners and operators plan reduced utilization.

(2) Except where the designated representative requests conditional approval of the plan, the first calendar year and, if known, the last calendar year in which the reduced utilization plan is to be in effect. Unless the designated representative specifies an earlier calendar year, the last calendar year shall be deemed to be 1999.

(3) A statement whether the plan designates a compensating unit or relies on sulfur-free generation, any energy conservation measure, or any improved unit efficiency measure to account for any amount of reduced utilization.

(4) If the plan designates a compensating unit, or relies on sulfur-free generation, to account for any amount of reduced utilization:

(i) Identification of each compensating unit or sulfur-free generator.

(ii) For each compensating unit. (A) Each of the following: The unit's 1985 actual SO_2 emissions rate; the unit's 1985 allowable emissions rate; the unit's 1989 actual SO_2 emissions rate; the unit's 1990 actual SO_2 emissions rate; and, as of November 15, 1990, the most stringent unit-specific federally enforceable or State enforceable SO_2 emissions limitation covering the unit for 1995–1999. For purposes of determining the most stringent emissions limitation, applicable emissions limitations shall be converted to lbs/mmBtu in accordance with appendix B of this part. Where the most stringent emissions limitation is not the same for every year in 1995–1999, the most stringent emissions limitation shall be stated separately for each year.

(B) The unit's baseline divided by 2,000 lbs/ton and multiplied by the lesser of the unit's 1985 actual SO_2 emissions rate or 1985 allowable SO_2 emissions rate.

(C) The unit's baseline divided by 2000 lbs/ton and multiplied by the lesser of: The greater of the unit's 1989 or 1990 actual SO_2 emissions rate; or, as of November 15, 1990, the most stringent unit-specific federally enforceable or State enforceable SO_2 emissions limitation covering the unit for 1995–1999. Where the most stringent emissions limitation is not the same for every year in 1995–1999, the calculation in the prior sentence shall be made separately for each year.

(D) The difference between the amount under paragraph (c)(4)(ii)(B) of this section and the amount under paragraph (c)(4)(ii)(C) of this section. If the difference calculated in the prior sentence for any year exceeds the lesser of 10 percent of the amount under paragraph (c)(4)(ii)(B) of this section or 200 tons, the unit shall not be designated as a compensating unit for the year. Where the most stringent unit-specific federally enforceable or State enforceable SO_2 emissions limitation is not the same for every year in 1995–1999, the difference shall be calculated separately for each year.

(E) The allowance allocation calculated as the amount under paragraph (c)(4)(ii)(B) of this section. If the compensating unit is a new unit, it shall be deemed to have a baseline of zero and shall be allocated no allowances.

(F) Where, as of November 15, 1990, a non-unit-specific federally enforceable or State enforceable SO_2 emissions limitation covers the unit for any year in 1995–1999, the designated representative shall state each such limitation and propose a method for applying unit-

specific and non-unit-specific emissions limitations under paragraph (d) of this section.

(iii) For each sulfur-free generator, identification of any other Phase I units that designate the same sulfur-free generator in another plan submitted under paragraph (b) (1) or (4) of this section.

(iv) For each compensating unit or sulfur-free generator not in the dispatch system of the unit reducing utilization under the plan, the system directives or power purchase agreements or other contractual agreements governing the acquisition, by the dispatch system, of the electrical energy that is generated by the compensating unit or sulfur-free generator and on which the plan relies to accomplish reduced utilization. Such contractual agreements shall identify the specific compensating unit or sulfur-free generator from which the dispatch system acquires such electrical energy.

(5) The special provisions in paragraph (f) of this section.

(d) *Administrator's action.* (1) If the Administrator approves the reduced utilization plan, he or she will allocate allowances, as provided in the approved plan, to the Allowance Tracking System account for any designated compensating unit upon issuance of an Acid Rain permit containing the plan, except that, if the plan is conditionally approved, the allowances will be allocated upon revision of the permit to activate the plan.

(2) Where, as of November 15, 1990, a non-unit-specific federally enforceable or State enforceable emissions limitation covers the unit for any year during 1995–1999, the Administrator will specify on a case-by-case basis a method for using unit-specific and non-unit specific emissions limitations in approving or disapproving the compensating unit. The specified method will not treat a non-unit-specific emissions limitation as a unit-specific emissions limitation and will not result in compensating units retaining allowances allocated under paragraph (d)(1) of this section for emissions reductions necessary to meet a non-unit-specific emissions limitation. Such method may require an end-of-year review and the disapproval and de-designation, and adjustment of the allowances allocated to, the compensating unit and may require the designated representative of the compensating unit to surrender allowances by the allowance transfer deadline of the year that is subject to the review. Any surrendered allowances shall have the same or an earlier compliance use date as the allowances originally allocated for the year, and the designated representative may identify the serial numbers of the allowances to be deducted. In the absence of such identification, such allowances will be deducted on a first-in, first-out basis under § 73.35(c)(2) of this chapter.

(e) *Failure to submit a plan.* The designated representative of a Phase I unit will be deemed not to violate, during a Phase I calendar year, the requirement to submit a reduced utilization plan under paragraph (b)(1) or (4) of this section if the designated representative complies with the allowance surrender and other requirements of §§ 72.33, 72.91, and 72.92 of this chapter.

(f) *Special provisions*—(1) *Emissions limitations.* (i) Any compensating unit designated under an approved reduced utilization plan shall become a Phase I unit from January 1 of the calendar year in which the plan takes effect until January 1 of the year for which the plan is no longer in effect or is terminated, except that such unit shall not become subject to the Acid Rain emissions limitations for nitrogen oxides in Phase I under part 76 of this chapter.

(ii) The designated representative of any Phase I unit (including a unit governed by a reduced utilization plan relying on energy conservation, improved unit efficiency, sulfur-free generation, or a compensating unit) shall surrender allowances, and the Administrator will deduct or return allowances, in accordance with paragraph (d)(2) of this section and subpart I of this part.

(2) *Reporting requirements.* The designated representative of any Phase I unit (including a unit governed by a reduced utilization plan relying on energy conservation, improved unit efficiency, sulfur-free generation, or a compensating unit) shall comply with the special reporting requirements under §§ 72.91 and 72.92.

(3) *Liability*. The owners and operators of a unit governed by an approved reduced utilization plan shall be liable for any violation of the plan or this section at that or any other unit governed by the plan, including liability for fulfilling the obligations specified in part 77 of this chapter and section 411 of the Act.

(4) *Termination*. (i) A reduced utilization plan shall be in effect only in Phase I for the calendar years specified in the plan or until the calendar year for which a termination of the plan takes effect; *provided* that no reduced utilization plan that designates a compensating unit that serves as a control unit under a Phase I extension plan shall be terminated, and no such unit shall be de-designated as a compensating unit, before the end of Phase I.

(ii) To terminate a reduced utilization plan for a given calendar year prior to its last year for which the plan was approved:

(A) A notification to terminate in accordance with § 72.40(d) shall be submitted no later than 60 days before the allowance transfer deadline applicable to the given year; and

(B) In the notification to terminate, the designated representative of any compensating unit governed by the plan shall state that he or she surrenders for deduction from the unit's Allowance Tracking System account allowances equal in number to, and with the same or an earlier compliance use date as, those allocated under paragraph (d) of this section to each compensating unit for the calendar years for which the plan is to be terminated. The designated representative may identify the serial numbers of the allowances to be deducted. In the absence of such identification, allowances will be deducted on a first-in, first-out basis under § 73.35(c)(2) of this chapter.

(iii) If the requirements of paragraph (f)(3)(ii) are met and upon revision of the permit to terminate the reduced utilization plan, the Administrator will deduct the allowances specified in paragraph (f)(3)(ii)(B) of this section. No reduced utilization plan shall be terminated, and no unit shall be de-designated as a Phase I unit, unless such deduction is made.

[58 FR 3650, Jan. 11, 1993, as amended at 59 FR 60230, Nov. 22, 1994; 60 FR 18470, Apr. 11, 1995; 62 FR 55481, Oct. 24, 1997]

§ 72.44 Phase II repowering extensions.

(a) *Applicability*. (1) This section shall apply to the designated representative of:

(i) Any existing affected unit that is a coal-fired unit and has a 1985 actual SO_2 emissions rate equal to or greater than 1.2 lbs/mmBtu.

(ii) Any new unit that will be a replacement unit, as provided in paragraph (b)(2) of this section, for a unit meeting the requirements of paragraph (a)(1)(i) of this section.

(iii) Any oil and/or gas-fired unit that has been awarded clean coal technology demonstration funding as of January 1, 1991 by the Secretary of Energy.

(2) A repowering extension does not exempt the owner or operator for any unit governed by the repowering plan from the requirement to comply with such unit's Acid Rain emissions limitations for sulfur dioxide.

(b) The designated representative of any unit meeting the requirements of paragraph (a)(1)(i) of this section may include in the unit's Phase II Acid Rain permit application a repowering extension plan that includes a demonstration that:

(1) The unit will be repowered with a qualifying repowering technology in order to comply with the Phase II emissions limitations for sulfur dioxide; or

(2) The unit will be replaced by a new utility unit that has the same designated representative and that is located at a different site using a qualified repowering technology and the existing unit will be permanently retired from service on or before the date on which the new utility unit commences commercial operation.

(c) In order to apply for a repowering extension, the designated representative of a unit under paragraph (a) of this section shall:

(1) Submit to the permitting authority, by January 1, 1996, a complete repowering extension plan;

(2) Submit to the Administrator, before June 1, 1997, a complete petition for approval of repowering technology; and

(3) If the repowering extension plan is submitted for conditional approval, submit by December 31, 1997, a notification to activate the plan in accordance with § 72.40(c).

(d) *Contents and Review of Petition for Approval of Repowering Technology*. (1) A complete petition for approval of repowering technology shall include the following elements, in a format prescribed by the Administrator, concerning the technology to be used in a plan under paragraph (b) of this section and may follow the repowering technology demonstration protocol issued by the Administrator:

(i) Identification and description of the technology.

(ii) Vendor certification of the guaranteed performance characteristics of the technology, including:

(A) Percent removal and emission rate of each pollutant being controlled;

(B) Overall generation efficiency; and

(C) Information on the state, chemical constituents, and quantities of solid waste generated (including information on land-use requirements for disposal) and on the availability of a market to which any by-products may be sold.

(iii) If the repowering technology is not listed in the definition of a qualified repowering technology in § 72.2, a vendor certification of the guaranteed performance characteristics that demonstrate that the technology meets the criteria specified for non-listed technologies in § 72.2; *provided* that the existence of such guarantee shall not be a defense against the failure to meet the criteria for non-listed technologies.

(2) The Administrator may request any supplemental information that is deemed necessary to review the petition for approval of repowering technology.

(3) The Administrator shall review the petition for approval of repowering technology and, in consultation with the Secretary of Energy, shall make a conditional determination of whether the technology described in the petition is a qualifying repowering technology.

(4) Based on the petition for approval of repowering technology and the information provided under paragraph (d)(2) of this section and § 72.94(a), the Administrator will make a final determination of whether the technology described in the petition is a qualifying repowering technology.

(e) *Contents of repowering extension plan*. A complete repowering extension plan shall include the following elements in a format prescribed by the Administrator:

(1) Identification of the existing unit governed by the plan.

(2) The unit's federally-approved State Implementation Plan sulfur dioxide emissions limitation.

(3) The unit's 1995 actual SO_2 emissions rate.

(4) A schedule for construction, installation, and commencement of operation of the repowering technology approved or submitted for approval under paragraph (d) of this section, with dates for the following milestones:

(i) Completion of design engineering;

(ii) For a plan under paragraph (b)(1) of this section, removal of the existing unit from operation to install the qualified repowering technology;

(iii) Commencement of construction;

(iv) Completion of construction;

(v) Start-up testing;

(vi) For a plan under paragraph (b)(2) of this section, shutdown of the existing unit; and

(vii) Commencement of commercial operation of the repowering technology.

(5) For a plan under paragraph (b)(2) of this section:

(i) Identification of the new unit. A new unit shall not be included in more than one repowering extension plan.

(ii) Certification that the new unit will replace the existing unit.

(iii) Certification that the new unit has the same designated representative as the existing unit.

(iv) Certification that the existing unit will be permanently retired from service on or before the date the new unit commences commercial operation.

(6) The special provisions of paragraph (h) of this section.

(f) *Permitting authority's action on repowering extension plan*. (1) The permitting authority shall not approve a

repowering extension plan until the Administrator makes a conditional determination that the technology is a qualified repowering technology, unless the permitting authority conditionally approves such plan subject to the conditional determination of the Administrator.

(2) *Permit issuance.* (i) Upon a conditional determination by the Administrator that the technology to be used in the repowering extension plan is a qualified repowering technology and a determination by the permitting authority that such plan meets the requirements of this section, the permitting authority shall issue the Acid Rain portion of the operating permit including:

(A) The approved repowering extension plan; and

(B) A schedule of compliance with enforceable milestones for construction, installation, and commencement of operation of the repowering technology and other requirements necessary to ensure that Phase II emission reduction requirements under this section will be met.

(ii) Except as otherwise provided in paragraph (g) of this section, the repowering extension shall be in effect starting January 1, 2000 and ending on the day before the date (specified in the Acid Rain permit) on which the existing unit will be removed from operation to install the qualifying repowering technology or will be permanently removed from service for replacement by a new unit with such technology; *provided* that the repowering extension shall end no later than December 31, 2003.

(iii) The portion of the operating permit specifying the repowering extension and other requirements under paragraph (f)(2)(i) of this section shall be subject to the Administrator's final determination, under paragraph (d)(4) of this section, that the technology to be used in the repowering extension plan is a qualifying repowering technology.

(3) *Allowance allocation.* The Administrator will allocate allowances after issuance of an operating permit containing the repowering extension plan (or, if the plan is conditionally approved, after the revision of the Acid Rain permit under § 72.40(c)) and of the Administrator's final determination, under paragraph (d)(4) of this section, that the technology to be used in such plan is a qualifying repowering technology. Allowances will be allocated (including a pro rata allocation for any fraction of a year), as follows:

(i) To the existing unit under the approved plan, in accordance with § 73.21 of this chapter during the repowering extension under paragraph (f)(2)(ii) of this section; and

(ii) To the existing unit under the approved plan under paragraph (b)(1) of this section or, in lieu of any further allocations to the existing unit, to the new unit under the approved plan under paragraph (b)(2) of this section, in accordance with § 73.21 of this chapter, after the repowering extension under paragraph (f)(2)(ii) of this section ends.

(g) *Failed repowering projects.* (1)(i) If, at any time before the end of the repowering extension under paragraph (f)(2)(ii) of this section, the designated representative of a unit governed by an approved repowering extension plan notifies the Administrator in writing that the owners and operators have decided to terminate efforts to properly design, construct, and test the repowering technology specified in the plan before completion of construction or start-up testing and demonstrates, in a requested permit modification, to the Administrator's satisfaction that such efforts were in good faith, the unit shall not be deemed in violation of the Act because of such a termination. If the Administrator is not the permitting authority, a copy of the requested permit modification shall be sumitted to the Administrator. Where the preceding requirements of this paragraph are met, the permitting authority shall revise the operating permit in accordance with this paragraph and paragraph (g)(1)(ii) of this section and § 72.81 (permit modification).

(ii) Regardless of whether notification under paragraph (g)(1)(i) of this section is given, the repowering extension will end beginning on the earlier of the date of such notification or the date by which the designated representative was required to give such

notification under § 72.94(d). The Administrator will deduct allowances (including a pro rata deduction for any fraction of a year) from the Allowance Tracking System account of the existing unit to the extent necessary to ensure that, beginning the day after the extension ends, allowances are allocated in accordance with § 73.21(c)(1) of this chapter.

(2) If the designated representative of a unit governed by an approved repowering extension plan demonstrates to the satisfaction of the Administrator, in a requested permit modification, that the repowering technology specified in the plan was properly constructed and tested on such unit but was unable to achieve the emissions reduction limitations specified in the plan and that it is economically or technologically infeasible to modify the technology to achieve such limits, the unit shall not be deemed in violation of the Act because of such failure to achieve the emissions reduction limitations. If the Administrator is not the permitting authority, a copy of the requested permit modification shall be sumitted to the Administrator. In order to be properly constructed and tested, the repowering technology shall be constructed at least to the extent necessary for direct testing of the multiple combustion emissions (including sulfur dioxide and nitrogen oxides) from such unit while operating the technology at nameplate capacity. Where the preceding requirements of this paragraph are met:

(i) The permitting authority shall revise the Acid Rain portion of the operating permit in accordance with paragraphs (g)(2) (ii) and (iii) and § 72.81 (permit modification).

(ii) The existing unit may be retrofitted or repowered with another clean coal or other available control technology.

(iii) The repowering extension will continue in effect until the earlier of the date the existing unit commences commercial operation with such control technology or December 31, 2003. The Administrator will allocate or deduct allowances as necessary to ensure that allowances are allocated in accordance with paragraph (f)(3) of this section applying the repowering extension under this paragraph.

(h) *Special provisions*—(1) *Emissions Limitations*. (i) *Sulfur Dioxide*. Allowances allocated during the repowering extension under paragraphs (f)(3) and (g)(2)(iii) of this section to a unit governed by an approved repowering extension plan shall not be transferred to any Allowance Tracking System account other than the unit accounts of other units at the same source as that unit.

(ii) *Nitrogen oxides*. Any existing unit governed by an approved repowering extension plan shall be subject to the Acid Rain emissions limitations for nitrogen oxides in accordance with part 76 of this chapter beginning on the date that the unit is removed from operation to install the repowering technology or is permanently removed from service.

(iii) No existing unit governed by an approved repowering extension plan shall be eligible for a waiver under section 111(j) of the Act.

(iv) No new unit governed by an approved repowering extension plan shall receive an exemption from the requirements imposed under section 111 of the Act.

(2) *Reporting requirements*. Each unit governed by an approved repowering extension plan shall comply with the special reporting requirements of § 72.94.

(3) *Liability*. (i) The owners and operators of a unit governed by an approved repowering plan shall be liable for any violation of the plan or this section at that or any other unit governed by the plan, including liability for fulfilling the obligations specified in part 77 of this chapter and section 411 of the Act.

(ii) The units governed by the plan under paragraph (b)(2) of this section shall continue to have a common designated representative until the existing unit is permanently retired under the plan.

(4) *Terminations*. Except as provided in paragraph (g) of this section, a repowering extension plan shall not be terminated after December 31, 1999.

[58 FR 3650, Jan. 11, 1993, as amended at 58 FR 15649, Mar. 23, 1993; 62 FR 55481, Oct. 24, 1997]

Subpart E—Acid Rain Permit Contents

§ 72.50 General.

(a) Each Acid Rain permit (including any draft or proposed Acid Rain permit) will contain the following elements in a format prescribed by the Administrator:

(1) All elements required for a complete Acid Rain permit application under § 72.31 of this part, as approved or adjusted by the permitting authority;

(2) The applicable Acid Rain emissions limitation for sulfur dioxide; and

(3) The applicable Acid Rain emissions limitation for nitrogen oxides.

(b) Each Acid Rain permit is deemed to incorporate the definitions of terms under § 72.2 of this part.

§ 72.51 Permit shield.

Each affected unit operated in accordance with the Acid Rain permit that governs the unit and that was issued in compliance with title IV of the Act, as provided in this part and parts 73, 74, 75, 76, 77, and 78 of this chapter shall be deemed to be operating in compliance with the Acid Rain Program, except as provided in § 72.9(g)(6).

[58 FR 3650, Jan. 11, 1993, as amended at 62 FR 55481, Oct. 24, 1997]

Subpart F—Federal Acid Rain Permit Issuance Procedures

§ 72.60 General.

(a) *Scope*. This subpart and parts 74, 76, and 78 of this chapter contain the procedures for federal issuance of Acid Rain permits for Phase I of the Acid Rain Program and Phase II for sources for which the Administrator is the permitting authority under § 72.74.

(1) Notwithstanding the provisions of part 71 of this chapter, the provisions of subparts C, D, E, F, and H of this part and of parts 74, 76, and 78 of this chapter shall govern the following requirements for Acid Rain permit applications and permits: submission, content, and effect of permit applications; content and requirements of compliance plans and compliance options; content of permits and permit shield; procedures for determining completeness of permit applications; issuance of draft permits; administrative record; public notice and comment and public hearings on draft permits; response to comments on draft permits; issuance and effectiveness of permits; permit revisions; and administrative appeal procedures. The provisions of part 71 of this chapter concerning Indian tribes, delegation of a part 71 program, affected State review of draft permits, and public petitions to reopen a permit for cause shall apply to Acid Rain permit applications and permits.

(2) The procedures in this subpart do not apply to the issuance of Acid Rain permits by State permitting authorities with operating permit programs approved under part 70 of this chapter, except as expressly provided in subpart G of this part.

(b) *Permit Decision Deadlines*. Except as provided in § 72.74(c)(1)(i), the Administrator will issue or deny an Acid Rain permit under § 72.69(a) within 6 months of receipt of a complete Acid Rain permit application submitted for a unit, in accordance with § 72.21, at the U.S. EPA Regional Office for the Region in which the source is located.

(c) *Use of Direct Final Procedures*. The Administrator may, in his or her discretion, issue, as single document, a draft Acid Rain permit in accordance with § 72.62 and an Acid Rain permit in final form and may provide public notice of the opportunity for public comment on the draft Acid Rain permit in accordance with § 72.65. The Administrator may provide that, if no significant, adverse comment on the draft Acid Rain permit is timely submitted, the Acid Rain permit will be deemed to be issued on a specified date without further notice and, if such significant, adverse comment is timely submitted, an Acid Rain permit or denial of an Acid Rain permit will be issued in accordance with § 72.69. Any notice provided under this paragraph (c) will include a description of the procedure in the prior sentence.

[62 FR 55481, Oct. 24, 1997]

§ 72.61 Completeness.

(a) *Determination of Completeness*. The Administrator will determine whether the Acid Rain permit application is complete within 60 days of receipt by

the U.S. EPA Regional Office for the Region in which the source is located. The permit application shall be deemed to be complete if the Administrator fails to notify the designated representative to the contrary within 60 days of receipt.

(b) *Supplemental Information*. (1) Regardless of whether the Acid Rain permit application is complete under paragraph (a) of this section, the Administrator may require submission of any additional information that the Administrator determines to be necessary in order to review the Acid Rain permit application and issue an Acid Rain permit.

(2)(i) Within a reasonable period determined by the Administrator, the designated representative shall submit the information required under paragraph (b)(1) of this section.

(ii) If the designated representative fails to submit the supplemental information within the required time period, the Administrator may disapprove that portion of the Acid Rain permit application for the review of which the information was necessary and may deny the source an Acid Rain permit.

(3) Any designated representative who fails to submit any relevant information or who has submitted incorrect information in a permit application shall, upon becoming aware of such failure or incorrect submittal, promptly submit such supplementary information or corrected information to the Administrator.

[58 FR 3650, Jan. 11, 1993, as amended at 62 FR 55481, Oct. 24, 1997]

§ 72.62 Draft permit.

(a) After the Administrator receives a complete Acid Rain permit application and any supplemental information, the Administrator will issue a draft permit that incorporates in whole, in part, or with changes or conditions as appropriate, the permit application or deny the source a draft permit.

(b) The draft permit will be based on the information submitted by the designated representative of the affected source and other relevant information.

(c) The Administrator will serve a copy of the draft permit and the statement of basis on the designated representative of the affected source.

(d) The Administrator will provide a 30-day period for public comment, and opportunity to request a public hearing, on the draft permit or denial of a draft permit, in accordance with the public notice required under § 72.65(a)(1)(i) of this part.

§ 72.63 Administrative record.

(a) *Contents of the Administrative Record*. The Administrator will prepare an administrative record for an Acid Rain permit or denial of an Acid Rain permit. The administrative record will contain:

(1) The permit application and any supporting or supplemental data submitted by the designated representative;

(2) The draft permit;

(3) The statement of basis;

(4) Copies of any documents cited in the statement of basis and any other documents relied on by the Administrator in issuing or denying the draft permit (including any records of discussions or conferences with owners, operators, or the designated representative of affected units at the source or interested persons regarding the draft permit), or, for any such documents that are readily available, a statement of their location;

(5) Copies of all written public comments submitted on the draft permit or denial of a draft permit;

(6) The record of any public hearing on the draft permit or denial of a draft permit;

(7) The Acid Rain permit; and

(8) Any response to public comments submitted on the draft permit or denial of a draft permit and copies of any documents cited in the response and any other documents relied on by the Administrator to issue or deny the Acid Rain permit, or, for any such documents that are readily available, a statement of their location.

(b) [Reserved]

§ 72.64 Statement of basis.

(a) The statement of basis will briefly set forth significant factual, legal, and policy considerations on which the Administrator relied in issuing or denying the draft permit.

(b) The statement of basis will include:

(1) The reasons, and supporting authority, for approval or disapproval of any compliance options requested in the permit application, including references to applicable statutory or regulatory provisions and to the administrative record; and

(2) The name, address, and telephone, and facsimile numbers of the EPA office processing the issuance or denial of the draft permit.

§ 72.65 Public notice of opportunities for public comment.

(a)(1) The Administrator will give public notice of the following:

(i) The draft permit or denial of a draft permit and the opportunity for public review and comment and to request a public hearing; and

(ii) Date, time, location, and procedures for any scheduled hearing on the draft permit or denial of a draft permit.

(2) Any public notice given under this section may be for the issuance or denial of one or more draft permits.

(b) *Methods.* The Administrator will give the public notice required by this section by:

(1) Serving written notice on the following persons (except where such person has waived his or her right to receive such notice):

(i) The designated representative;

(ii) The air pollution control agencies of affected States; and

(iii) Any interested person.

(2) Giving notice by publication in the FEDERAL REGISTER and in a newspaper of general circulation in the area where the source covered by the Acid Rain permit application is located or in a State publication designed to give general public notice. Notwithstanding the prior sentence, if a draft permit requires the affected units at a source to comply with § 72.9(c)(1) and to meet any applicable emission limitation for NO_X under §§ 76.5, 76.6, 76.7, 76.8, or 76.11 of this chapter and does not include for any unit a compliance option under § 72.44, part 74 of this chapter, or § 76.10 of this chapter, the Administrator may, in his or her discretion, provide notice of the draft permit by FEDERAL REGISTER publication and may omit notice by newspaper or State publication.

(c) *Contents.* All public notices issued under this section will contain the following information:

(1) Identification of the EPA office processing the issuance or denial of the draft permit for which the notice is being given.

(2) Identification of the designated representative for the affected source.

(3) Identification of each unit covered by the Acid Rain permit application and the draft permit.

(4) Any compliance options proposed for approval in the draft permit or for disapproval and the total allowances (including any under the compliance options) allocated to each unit if the Acid Rain permit application is approved.

(5) The address and office hours of a public location where the administrative record is available for public inspection and a statement that all information submitted by the designated representative and not protected as confidential under section 114(c) of the Act is available for public inspection as part of the administrative record.

(6) For public notice under paragraph (a)(1)(i) of this section, a brief description of the public comment procedures, including:

(i) A 30-day period for public comment beginning the date of publication of the notice or, in the case of an extension or reopening of the public comment period, such period as the Administrator deems appropriate;

(ii) The address where public comments should be sent;

(iii) Required formats and contents for public comment;

(iv) An opportunity to request a public hearing to occur not earlier than 15 days after public notice is given and the location, date, time, and procedures of any scheduled public hearing; and

(v) Any other means by which the public may participate.

(d) *Extensions and Reopenings of the Public Comment Period.* On the Administrator's own motion or on the request of any person, the Administrator may, at his or her discretion, extend or reopen the public comment period where

he or she finds that doing so will contribute to the decision-making process by clarifying one or more significant issues affecting the draft permit or denial of a draft permit. Notice of any such extension or reopening shall be given under paragraph (a)(1)(i) of this section.

[58 FR 3650, Jan. 11, 1993, as amended at 62 FR 55482, Oct. 24, 1997]

§ 72.66 Public comments.

(a) *General.* During the public comment period, any person may submit written comments on the draft permit or the denial of a draft permit.

(b) *Form.* (1) Comments shall be submitted in duplicate.

(2) The submission shall clearly indicate the draft permit issuance or denial to which the comments apply.

(3) The submission shall clearly indicate the name of the person commenting, his or her interest in the matter, and his or her affiliation, if any, to owners and operators of any unit covered by the Acid Rain permit application.

(c) *Contents.* Timely comments on any aspect of the draft permit or denial or a draft permit will be considered unless they concern:

(1) Any standard requirement under § 72.9;

(2) Issues that are not relevant, such as:

(i) The environmental effects of acid rain, acid deposition, sulfur dioxide, or nitrogen oxides generally; and

(ii) Permit issuance procedures, or actions on other permit applications, that are not relevant to the draft permit issuance or denial in question.

(d) Persons who do not wish to raise issues concerning the issuance or denial of the draft permit, but who wish to be notified of any subsequent actions concerning such matter may so indicate in writing during the public comment period or at any other time. The Administrator will place their names on a list of interested persons.

§ 72.67 Opportunity for public hearing.

(a) During the public comment period, any person may request a public hearing. A request for a public hearing shall be made in writing and shall state the issues proposed to be raised in the hearing.

(b) On the Administrator's own motion or on the request of any person, the Administrator may, at his or her discretion, hold a pubic hearing whenever the Administrator finds that such a hearing will contribute to the decision-making process by clarifying one or more significant issues affecting the draft permit or denial of a draft permit. Public hearings will not be held on issues under § 72.66(c) (1) and (2).

(c) During a public hearing under this section, any person may submit oral or written comments concerning the draft permit or denial of a draft permit. The Administrator may set reasonable limits on the time allowed for oral statements and will require the submission of a written summary of each oral statement.

(d) The Administrator will assure that a record is made of the hearing.

§ 72.68 Response to comments.

(a) The Administrator will consider comments on the draft permit or denial of a draft permit that are received during the public comment period and any public hearing. The Administrator is not required to consider comments otherwise received.

(b) In issuing or denying an Acid Rain permit, the Administrator will:

(1) Identify any permit provision or portion of the statement of basis that has been changed and the reasons for the change; and

(2) Briefly describe and respond to relevant comments under paragraph (a) of this section.

§ 72.69 Issuance and effective date of acid rain permits.

(a) After the close of the public comment period, the Administrator will issue or deny an Acid Rain permit. The Administrator will serve a copy of any Acid Rain permit and the response to comments on the designated representative for the source covered by the issuance or denial and serve written notice of the issuance or denial on the air pollution control agencies of affected States and any interested person. The Administrator will also give notice in the FEDERAL REGISTER.

(b)(1) The term of every Acid Rain permit shall be 5 years commencing on its effective date.

(2) Every Acid Rain permit for Phase I shall take effect on January 1, 1995.

[58 FR 3650, Jan. 11, 1993, as amended at 62 FR 55482, Oct. 24, 1997]

Subpart G—Acid Rain Phase II Implementation

§ 72.70 Relationship to title V operating permit program.

(a) *Scope.* This subpart sets forth criteria for approval of State operating permit programs and acceptance of State Acid Rain programs, the procedure for including State Acid Rain programs in a title V operating permit program, and the requirements with which State permitting authorities with accepted programs shall comply, and with which the Administrator will comply in the absence of an accepted State program, to issue Phase II Acid Rain permits.

(b) *Relationship to operating permit program.* Each State permitting authority with an affected source shall act in accordance with this part and parts 70, 74, 76, and 78 of this chapter for the purpose of incorporating Acid Rain Program requirements into each affected source's operating permit . To the extent that this part or part 74, 76, or 78 of this chapter is inconsistent with the requirements of part 70 of this chapter, this part and parts 74, 76, and 78 of this chapter shall take precedence and shall govern the issuance, denial, revision, reopening, renewal, and appeal of the Acid Rain portion of an operating permit.

[62 FR 55482, Oct. 24, 1997, as amended at 66 FR 12978, Mar. 1, 2001]

§ 72.71 Acceptance of State Acid Rain programs—general.

(a) Each State shall submit, to the Administrator for review and acceptance, a State Acid Rain program meeting the requirements of §§ 72.72 and 72.73.

(b) The Administrator will review each State Acid Rain program or portion of a State Acid Rain program and accept, by notice in the FEDERAL REGISTER, all or a portion of such program to the extent that it meets the requirements of §§ 72.72 and 72.73. At his or her discretion, the Administrator may accept, with conditions and by notice in the FEDERAL REGISTER, all or a portion of such program despite the failure to meet requirements of §§ 72.72 and 72.73. On the later of the date of publication of such notice in the FEDERAL REGISTER or the date on which the State operating permit program is approved under part 70 of this chapter, the State Acid Rain program accepted by the Administrator will become a portion of the approved State operating permit program. Before accepting or rejecting all or a portion of a State Acid Rain Program, the Administrator will provide notice and opportunity for public comment on such acceptance or rejection.

(c)(1) Except as provided in paragraph (c)(2) of this section, the Administrator will issue all Acid Rain permits for Phase I. The Administrator reserves the right to delegate the remaining administration and enforcement of Acid Rain permits for Phase I to approved State operating permit programs.

(2) The State permitting authority will issue an opt-in permit for a combustion or process source subject to its jurisdiction if, on the date on which the combustion or process source submits an opt-in permit application, the State permitting authority has opt-in regulations accepted under paragraph (b) of this section and an approved operating permits program under part 70 of this chapter.

[62 FR 55482, Oct. 24, 1997]

§ 72.72 Criteria for State operating permit program.

A State operating permit program (including a State Acid Rain program) shall meet the following criteria. Any aspect of a State operating permits program or any implementation of a State operating permit program that fails to meet these criteria shall be grounds for nonacceptance or withdrawal of all or part of the Acid Rain portion of an approved State operating permit program by the Administrator or for disapproval or withdrawal of approval of the State operating permit program by the Administrator.

(a) *Non-Interference with Acid Rain Program.* The State operating permit program shall not include or implement any measures that would interfere with the Acid Rain Program. In particular, the State program shall not restrict or interfere with allowance trading and shall not interfere with the Administrator's decision on an offset plan. Aspects and implementation of the State program that would constitute interference with the Acid Rain Program, and are thus prohibited, include but are not limited to:

(1) Prohibitions, inconsistent with the Acid Rain Program, on the acquisition or transfer of allowances by an affected unit or affected source under the jurisdiction of the State permitting authority;

(2) Restrictions, inconsistent with the Acid Rain Program, on an affected unit's or an affected source's ability to sell or otherwise obligate its allowances;

(3) Requirements that an affected unit or affected source maintain a balance of allowances in excess of the level determined to be prudent by any utility regulatory authority with jurisdiction over the owners of the affected unit or affected source;

(4) Failing to notify the Administrator of any State administrative or judicial appeals of, or decisions covering, Acid Rain permit provisions that might affect Acid Rain Program requirements;

(5) Issuing an order, inconsistent with the Acid Rain Program, interpreting Acid Rain Program requirements as not applicable to an affected source or an affected unit in whole or in part or otherwise adjusting the requirements;

(6) Withholding approval of any compliance option that meets the requirements of the Acid Rain Program; or

(7) Any other aspect of implementation that the Administrator determines would hinder the operation of the Acid Rain Program.

(b) The State operating permit program shall require the following provisions, which are adopted to the extent that this paragraph (b) is incorporated by reference or is otherwise included in the State operating permit program.

(1) *Acid Rain Permit Issuance.* Issuance or denial of Acid Rain permits shall follow the procedures under this part, part 70 of this chapter, and, for combustion or process sources, part 74, including:

(i) *Permit application*—(A) *Requirement to comply.* (*1*) The owners and operators and the designated representative for each affected source, except for combustion or process sources, under jurisdiction of the State permitting authority shall be required to comply with subparts B, C, and D of this part.

(*2*) The owners and operators and the designated representative for each combustion or process source under jurisdiction of the State permitting authority shall be required to comply with subpart B of this part and subparts B, C, D, and E of part 74 of this chapter.

(B) *Effect of an Acid Rain permit application.* A complete Acid Rain permit application, except for a permit application for a combustion or process source, shall be binding on the owners and operators and the designated representative of the affected source, all affected units at the source, and any other unit governed by the permit application and shall be enforceable as an Acid Rain permit, from the date of submission of the permit application until the issuance or denial of the Acid Rain permit under paragraph (b)(1)(vii) of this section.

(ii) *Draft Permit.* (A) The State permitting authority shall prepare the draft Acid Rain permit in accordance with subpart E of this part and part 76 of this chapter or, for a combustion or process source, with subpart B of part 74 of this chapter, or deny a draft Acid Rain permit.

(B) Prior to issuance of a draft permit for a combustion or process source, the State permitting authority shall provide the designated representative of a combustion or process source an opportunity to confirm its intention to opt-in, in accordance with § 74.14 of this chapter.

(iii) *Public Notice and Comment Period.* Public notice of the issuance or denial of the draft Acid Rain permit and the opportunity to comment and request a

public hearing shall be given by publication in a newspaper of general circulation in the area where the source is located or in a State publication designed to give general public notice. Notwithstanding the prior sentence, if a draft permit requires the affected units at a source to comply with § 72.9(c)(1) and to meet any applicable emission limitation for NO_X under §§ 76.5, 76.6, 76.7, 76.8, or 76.11 of this chapter and does not include for any unit a compliance option under § 72.44, part 74 of this chapter, or § 76.10 of this chapter, the State permitting authority may, in its discretion, provide notice by serving notice on persons entitled to receive a written notice and may omit notice by newspaper or State publication.

(iv) *Proposed permit.* The State permitting authority shall incorporate all changes necessary and issue a proposed Acid Rain permit in accordance with subpart E of this part and part 76 of this chapter or, for a combustion or process source, with subpart B of part 74 of this chapter, or deny a proposed Acid Rain permit.

(v) *Direct proposed procedures.* The State permitting authority may, in its discretion, issue, as a single document, a draft Acid Rain permit in accordance with paragraph (b)(1)(ii) of this section and a proposed Acid Rain permit and may provide public notice of the opportunity for public comment on the draft Acid Rain permit in accordance with paragraph (b)(1)(iii) of this section. The State permitting authority may provide that, if no significant, adverse comment on the draft Acid Rain permit is timely submitted, the proposed Acid Rain permit will be deemed to be issued on a specified date without further notice and, if such significant, adverse comment is timely submitted, a proposed Acid Rain permit or denial of a proposed Acid Rain permit will be issued in accordance with paragraph (b)(1)(iv) of this section. Any notice provided under this paragraph (b)(1)(v) shall include a description of the procedure in the prior sentence.

(vi) *Acid Rain Permit Issuance.* Following the Administrator's review of the proposed Acid Rain permit, the State permitting authority shall or, under part 70 of this chapter, the Administrator will, incorporate any required changes and issue or deny the Acid Rain permit in accordance with subpart E of this part and part 76 of this chapter or, for a combustion or process source, with subpart B of part 74 of this chapter.

(vii) *New Owners.* An Acid Rain permit shall be binding on any new owner or operator or designated representative of any source or unit governed by the permit.

(viii) Each Acid Rain permit (including a draft or proposed permit) shall contain all applicable Acid Rain requirements, shall be a complete and segregable portion of the operating permit, and shall not incorporate information contained in any other documents, other than documents that are readily available.

(ix) No Acid Rain permit (including a draft or proposed permit) shall be issued unless the Administrator has received a certificate of representation for the designated representative of the source in accordance with subpart B of this part.

(x) Except as provided in § 72.73(b) and, with regard to combustion or process sources, in § 74.14(c)(6) of this chapter, the State permitting authority shall issue or deny an Acid Rain permit within 18 months of receiving a complete Acid Rain permit application submitted in accordance with § 72.21 or such lesser time approved under part 70 of this chapter.

(2) *Permit Revisions.* In acting on any Acid Rain permit revision, the State permitting authority shall follow the provisions and procedures set forth at subpart H of this part.

(3) *Permit Renewal.* The renewal of an Acid Rain permit for an affected source shall be subject to all the requirements of this subpart pertaining to the issuance of permits.

(4) *Acid Rain Program Forms.* In developing the Acid Rain portion of the operating permit, the permitting authority shall use the applicable forms or other formats prescribed by the Administrator under the Acid Rain Program; *provided* that the Administrator may waive this requirement in whole or in part.

(5) *Acid Rain Appeal Procedures.* (i) Appeals of the Acid Rain portion of an

operating permit issued by the State permitting authority that do not challenge or involve decisions or actions of the Administrator under this part or part 73, 74, 75, 76, 77, or 78 of this chapter shall be conducted according to procedures established by the State in accordance with part 70 of this chapter. Appeals of the Acid Rain portion of such a permit that challenge or involve such decisions or actions of the Administrator shall follow the procedures under part 78 of this chapter and section 307 of the Act. Such decisions or actions include, but are not limited to, allowance allocations, determinations concerning alternative monitoring systems, and determinations of whether a technology is a qualifying repowering technology.

(ii) [Reserved]

(iii) The State permitting authority shall serve written notice on the Administrator of any State administrative or judicial appeal concerning as Acid Rain provision of any operating permit or denial of an Acid Rain portion of any operating permit within 30 days of the filing of the appeal.

(iv) Any State administrative permit appeals procedures shall ensure that the Administrator may intervene as a matter of right in any permit appeal involving an Acid Rain permit provision or denial of an Acid Rain permit.

(v) The State permitting authority shall serve written notice on the Administrator of any determination or order in a State administrative or judicial proceeding that interprets, modifies, voids, or otherwise relates to any portion of an Acid Rain permit.

(vi) A failure of the State permitting authority to issue an Acid Rain permit in accordance with § 72.73(b)(1) or, with regard to combustion or process sources, § 74.14(b)(6) of this chapter shall be ground for filing an appeal.

[58 FR 3650, Jan. 11, 1993, as amended at 60 FR 17113, Apr. 4, 1995; 62 FR 55482, Oct. 24, 1997; 66 FR 12978, Mar. 1, 2001; 70 FR 25334, May 12, 2005]

§ 72.73 State issuance of Phase II permits.

(a) *State Permit Issuance.* (1) A State that is authorized to administer and enforce an operating permit program under part 70 of this chapter and that has a State Acid Rain program accepted by the Administrator under § 72.71 shall be responsible for administering and enforcing Acid Rain permits effective in Phase II for all affected sources:

(i) That are located in the geographic area covered by the operating permits program; and

(ii) To the extent that the accepted State Acid Rain program is applicable.

(2) In administering and enforcing Acid Rain permits, the State permitting authority shall comply with the procedures for issuance, revision, renewal, and appeal of Acid Rain permits under this subpart.

(b) *Permit Issuance Deadline.* (1) A State, to the extent that it is responsible under paragraph (a) of this section as of December 31, 1997 (or such later date as the Administrator may establish) for administering and enforcing Acid Rain permits, shall:

(i) On or before December 31, 1997, issue an Acid Rain permit for Phase II covering the affected units (other than opt-in sources) at each source in the geographic area for which the program is approved; *provided* that the designated representative of the source submitted a timely and complete Acid Rain permit application in accordance with § 72.21.

(ii) On or before January 1, 1999, for each unit subject to an Acid Rain NO_X emissions limitation, amend the Acid Rain permit under § 72.83 and add any NO_X early election plan that was approved by the Administrator under § 76.8 of this chapter and has not been terminated and reopen the Acid Rain permit and add any other Acid Rain Program nitrogen oxides requirements; *provided* that the designated representative of the affected source submitted a timely and complete Acid Rain permit application for nitrogen oxides in accordance with § 72.21.

(2) Each Acid Rain permit issued in accordance with this section shall have a term of 5 years commencing on its effective date; *provided* that, at the discretion of the permitting authority, an Acid Rain permit for Phase II issued to a source may have a term of less than 5 years where necessary to coordinate the term of such permit with the term of an operating permit to be issued to

the source under a State operating permit program. Each Acid Rain permit issued in accordance with paragraph (b)(1) of this section shall take effect by the later of January 1, 2000, or, where the permit governs a unit under § 72.6(a)(3) of this part, the deadline for monitor certification under part 75 of this chapter.

[62 FR 55483, Oct. 24, 1997, as amended at 70 FR 25334, May 12, 2005]

§ 72.74 Federal issuance of Phase II permits.

(a)(1) The Administrator will be responsible for administering and enforcing Acid Rain permits for Phase II for any affected sources to the extent that a State permitting authority is not responsible, as of January 1, 1997 or such later date as the Administrator may establish, for administering and enforcing Acid Rain permits for such sources under § 72.73(a).

(2) After and to the extent the State permitting authority becomes responsible for administering and enforcing Acid Rain permits under § 72.73(a), the Administrator will suspend federal administration of Acid Rain permits for Phase II for sources and units to the extent that they are subject to the accepted State Acid Rain program, except as provided in paragraph (b)(4) of this section.

(b)(1) The Administrator will administer and enforce Acid Rain permits effective in Phase II for sources and units during any period that the Administrator is administering and enforcing an operating permit program under part 71 of this chapter for the geographic area in which the sources and units are located.

(2) The Administrator will administer and enforce Acid Rain permits effective in Phase II for sources and units otherwise subject to a State Acid Rain program under § 72.73(a) if:

(i) The Administrator determines that the State permitting authority is not adequately administering or enforcing all or a portion of the State Acid Rain program, notifies the State permitting authority of such determination and the reasons therefore, and publishes such notice in the FEDERAL REGISTER;

(ii) The State permitting authority fails either to correct the deficiencies within a reasonable period (established by the Administrator in the notice under paragraph (b)(2)(i) of this section) after issuance of the notice or to take significant action to assure adequate administration and enforcement of the program within a reasonable period (established by the Administrator in the notice) after issuance of the notice; and

(iii) The Administrator publishes in the FEDERAL REGISTER a notice that he or she will administer and enforce Acid Rain permits effective in Phase II for sources and units subject to the State Acid Rain program or a portion of the program. The effective date of such notice shall be a reasonable period (established by the Administrator in the notice) after the issuance of the notice.

(3) When the Administrator administers and enforces Acid Rain permits under paragraph (b)(1) or (b)(2) of this section, the Administrator will administer and enforce each Acid Rain permit issued under the State Acid Rain program or portion of the program until, and except to the extent that, the permit is replaced by a permit issued under this section. After the later of the date for publication of a notice in the FEDERAL REGISTER that the State operating permit program is currently approved by the Administrator or that the State Acid Rain program or portion of the program is currently accepted by the Administrator, the Administrator will suspend federal administration of Acid Rain permits effective in Phase II for sources and units to the extent that they are subject to the State Acid Rain program or portion of the program, except as provided in paragraph (b)(4) of this section.

(4) After the State permitting authority becomes responsible for administering and enforcing Acid Rain permits effective in Phase II under § 72.73(a), the Administrator will continue to administer and enforce each Acid Rain permit issued under paragraph (a)(1), (b)(1), or (b)(2) of this section until, and except to the extent that, the permit is replaced by a permit issued under the State Acid Rain

program. The State permitting authority may replace an Acid Rain permit issued under paragraph (a)(1), (b)(1), or (b)(2) of this section by issuing a permit under the State Acid Rain program by the expiration of the permit under paragraph (a)(1), (b)(1), or (b)(2) of this section. The Administrator may retain jurisdiction over the Acid Rain permits issued under paragraph (a)(1), (b)(1), or (b)(2) of this section for which the administrative or judicial review process is not complete and will address such retention of jurisdiction in a notice in the FEDERAL REGISTER.

(c) *Permit Issuance Deadline.* (1)(i) On or before January 1, 1998, the Administrator will issue an Acid Rain permit for Phase II setting forth the Acid Rain Program sulfur dioxide requirements for each affected unit (other than opt-in sources) at a source not under the jurisdiction of a State permitting authority that is responsible, as of January 1, 1997 (or such later date as the Administrator may establish), under § 72.73(a) of this section for administering and enforcing Acid Rain permits with such requirements; *provided* that the designated representative for the source submitted a timely and complete Acid Rain permit application in accordance with § 72.21. The failure by the Administrator to issue a permit in accordance with this paragraph shall be grounds for the filing of an appeal under part 78 of this chapter.

(ii) Each Acid Rain permit issued in accordance with this section shall have a term of 5 years commencing on its effective date. Each Acid Rain permit issued in accordance with paragraph (c)(1)(i) of this section shall take effect by the later of January 1, 2000 or, where a permit governs a unit under § 72.6(a)(3), the deadline for monitor certification under part 75 of this chapter.

(2) *Nitrogen Oxides.* Not later than 6 months following submission by the designated representative of an Acid Rain permit application for nitrogen oxides, the Administrator will amend under § 72.83 the Acid Rain permit and add any NO_X early election plan that was approved under § 76.8 of this chapter and has not been terminated and reopen the Acid Rain permit for Phase II and add any other Acid Rain Program nitrogen oxides requirements for each affected source not under the jurisdiction of a State permitting authority that is responsible, as of January 1, 1997 (or such later date as the Administrator may establish), under § 72.73(a) for issuing Acid Rain permits with such requirements; *provided* that the designated representative for the source submitted a timely and complete Acid Rain permit application for nitrogen oxides in accordance with § 72.21.

(d) *Permit Issuance.* (1) The Administrator may utilize any or all of the provisions of subparts E and F of this part to administer Acid Rain permits as authorized under this section or may adopt by rulemaking portions of a State Acid Rain program in substitution of or in addition to provisions of subparts E and F of this part to administer such permits. The provisions of Acid Rain permits for Phase I or Phase II issued by the Administrator shall not be applicable requirements under part 70 of this chapter.

(2) The Administrator may delegate all or part of his or her responsibility, under this section, for administering and enforcing Phase II Acid Rain permits or opt-in permits to a State. Such delegation will be made consistent with the requirements of this part and the provisions governing delegation of a part 71 program under part 71 of this chapter.

[62 FR 55483, Oct. 24, 1997]

Subpart H—Permit Revisions

§ 72.80 General.

(a) This subpart shall govern revisions to any Acid Rain permit issued by the Administrator and to the Acid Rain portion of any operating permit issued by a State permitting authority.

(b) Notwithstanding the operating permit revision procedures specified in parts 70 and 71 of this chapter, the provisions of this subpart shall govern revision of any Acid Rain Program permit provision.

(c) A permit revision may be submitted for approval at any time. No permit revision shall affect the term of the Acid Rain permit to be revised. No

permit revision shall excuse any violation of an Acid Rain Program requirement that occurred prior to the effective date of the revision.

(d) The terms of the Acid Rain permit shall apply while the permit revision is pending, except as provided in § 72.83 for administrative permit amendments.

(e) The standard requirements of § 72.9 shall not be modified or voided by a permit revision.

(f) Any permit revision involving incorporation of a compliance option that was not submitted for approval and comment during the permit issuance process or involving a change in a compliance option that was previously submitted, shall meet the requirements for applying for such compliance option under subpart D of this part and parts 74 and 76 of this chapter.

(g) Any designated representative who fails to submit any relevant information or who has submitted incorrect information in a permit revision shall, upon becoming aware of such failure or incorrect submittal, promptly submit such supplementary information or corrected information to the permitting authority.

(h) For permit revisions not described in §§ 72.81 and 72.82 of this part, the permitting authority may, in its discretion, determine which of these sections is applicable.

[58 FR 3650, Jan. 11, 1993, as amended at 62 FR 55484, Oct. 24, 1997]

§ 72.81 Permit modifications.

(a) Permit revisions that shall follow the permit modification procedures are:

(1) Relaxation of an excess emission offset requirement after approval of the offset plan by the Administrator;

(2) Incorporation of a final nitrogen oxides alternative emission limitation following a demonstration period;

(3) Determinations concerning failed repowering projects under § 72.44(g)(1)(i) and (2) of this part.

(b) The following permit revisions shall follow, at the option of the designated representative submitting the permit revision, either the permit modification procedures or the fast-track modification procedures under § 72.82 of this part:

(1) Consistent with paragraph (a) of this section, incorporation of a compliance option that the designated representative did not submit for approval and comment during the permit issuance process; except that incorporation of a reduced utilization plan that was not submitted during the permit issuance process, that does not designate a compensating unit, and that meets the requirements of § 72.43 of this part, may use the administrative permit amendment procedures under § 72.83 of this part;

(2) Changes in a substitution plan or reduced utilization plan that result in the addition of a new substitution unit or a new compensating unit under the plan;

(3) Addition of a nitrogen oxides averaging plan to a permit;

(4) Changes in a Phase I extension plan, repowering plan, nitrogen oxides averaging plan, or nitrogen oxides compliance deadline extension; and

(5) Changes in a thermal energy plan that result in any addition or subtraction of a replacement unit or any change affecting the number of allowances transferred for the replacement of thermal energy.

(c)(1) Permit modifications shall follow the permit issuance requirements of:

(i) Subparts E, F, and G of this part, where the Administrator is the permitting authority; or

(ii) Subpart G of this part, where the State is the permitting authority.

(2) For purposes of applying paragraph (c)(1) of this section, a requested permit modification shall be treated as a permit application, to the extent consistent with § 72.80 (c) and (d).

[58 FR 3650, Jan. 11, 1993, as amended at 60 FR 17114, Apr. 4, 1995; 62 FR 55485, Oct. 24, 1997]

§ 72.82 Fast-track modifications.

The following procedures shall apply to all fast-track modifications.

(a) If the Administrator is the permitting authority, the designated representative shall serve a copy of the fast-track modification on the Administrator and any person entitled to a written notice under § 72.65(b)(1)(ii) and (iii). If a State is the permitting authority, the designated representative

shall serve such a copy on the Administrator, the permitting authority, and any person entitled to receive a written notice of a draft permit under the approved State operating permit program. Within 5 business days of serving such copies, the designated representative shall also give public notice by publication in a newspaper of general circulation in the area where the sources are located or in a State publication designed to give general public notice.

(b) The public shall have a period of 30 days, commencing on the date of publication of the notice, to comment on the fast-track modification. Comments shall be submitted in writing to the permitting authority and to the designated representative.

(c) The designated representative shall submit the fast-track modification to the permitting authority on or before commencement of the public comment period.

(d) Within 30 days of the close of the public comment period if the Administrator is the permitting authority or within 90 days of the close of the public comment period if a State is the permitting authority, the permitting authority shall consider the fast-track modification and the comments received and approve, in whole or in part or with changes or conditions as appropriate, or disapprove the modification. A fast-track modification shall be subject to the same provisions for review by the Administrator and affected States as are applicable to a permit modification under § 72.81.

[58 FR 3650, Jan. 11, 1993, as amended at 62 FR 55485, Oct. 24, 1997]

§ 72.83 Administrative permit amendment.

(a) Acid Rain permit revisions that shall follow the administrative permit amendment procedures are:

(1) Activation of a compliance option conditionally approved by the permitting authority; *provided* that all requirements for activation under subpart D of this part are met;

(2) Changes in the designated representative or alternative designated representative; *provided* that a new certificate of representation is submitted;

(3) Correction of typographical errors;

(4) Changes in names, addresses, or telephone or facsimile numbers;

(5) Changes in the owners or operators; *provided* that a new certificate of representation is submitted within 30 days;

(6)(i) Termination of a compliance option in the permit; provided that all requirements for termination under subpart D of this part are met and this procedure shall not be used to terminate a repowering plan after December 31, 1999 or a Phase I extension plan;

(ii) For opt-in sources, termination of a compliance option in the permit; provided that all requirements for termination under § 74.47 of this chapter are met.

(7) Changes in a substitution or reduced utilization plan that do not result in the addition of a new substitution unit or a new compensating unit under the plan;

(8) Changes in the date, specified in a unit's Acid Rain permit, of commencement of operation of qualifying Phase I technology, *provided* that they are in accordance with § 72.42 of this part;

(9) Changes in the date, specified in a new unit's Acid Rain permit, of commencement of operation or the deadline for monitor certification, *provided* that they are in accordance with § 72.9 of this part;

(10) The addition of or change in a nitrogen oxides alternative emissions limitation demonstration period, *provided* that the requirements of part 76 of this chapter are met; and

(11) Changes in a thermal energy plan that do not result in the addition or subtraction of a replacement unit or any change affecting the number of allowances transferred for the replacement of thermal energy.

(12) The addition of a NO_X early election plan that was approved by the Administrator under § 76.8 of this chapter;

(13) The addition of an exemption for which the requirements have been met under § 72.7 or § 72.8 and

(14) Incorporation of changes that the Administrator has determined to be similar to those in paragraphs (a)(1) through (13) of this section.

(b)(1) The permitting authority will take final action on an administrative

permit amendment within 60 days, or, for the addition of an alternative emissions limitation demonstration period, within 90 days, of receipt of the requested amendment and may take such action without providing prior public notice. The source may implement any changes in the administrative permit amendment immediately upon submission of the requested amendment, *provided* that the requirements of paragraph (a) of this section are met.

(2) The permitting authority may, on its own motion, make an administrative permit amendment under paragraph (a)(3), (a)(4), (a)(12), or (a)(13) of this section at least 30 days after providing notice to the designated representative of the amendment and without providing any other prior public notice.

(c) The permitting authority will designate the permit revision under paragraph (b) of this section as having been made as an administrative permit amendment. Where a State is the permitting authority, the permitting authority shall submit the revised portion of the permit to the Administrator.

(d) An administrative amendment shall not be subject to the provisions for review by the Administrator and affected States applicable to a permit modification under § 72.81.

[58 FR 3650, Jan. 11, 1993, as amended at 60 FR 17114, Apr. 4, 1995; 62 FR 55485, Oct. 24, 1997; 66 FR 12978, Mar. 1, 2001]

§ 72.84 Automatic permit amendment.

The following permit revisions shall be deemed to amend automatically, and become a part of the affected unit's Acid Rain permit by operation of law without any further review:

(a) Upon recordation by the Administrator under part 73 of this chapter, all allowance allocations to, transfers to, and deductions from an affected unit's Allowance Tracking System account; and

(b) Incorporation of an offset plan that has been approved by the Administrator under part 77 of this chapter.

§ 72.85 Permit reopenings.

(a) The permitting authority shall reopen an Acid Rain permit for cause whenever:

(1) Any additional requirement under the Acid Rain Program becomes applicable to any affected unit governed by the permit;

(2) The permitting authority determines that the permit contains a material mistake or that an inaccurate statement was made in establishing the emissions standards or other terms or conditions of the permit, unless the mistake or statement is corrected in accordance with § 72.83; or

(3) The permitting authority determines that the permit must be revised or revoked to assure compliance with Acid Rain Program requirements.

(b) In reopening an Acid Rain permit for cause, the permitting authority shall issue a draft permit changing the provisions, or adding the requirements, for which the reopening was necessary. The draft permit shall be subject to the requirements of subparts E, F, and G of this part.

(c) As provided in §§ 72.73(b)(1) and 72.74(c)(2), the permitting authority shall reopen an Acid Rain permit to incorporate nitrogen oxides requirements, consistent with part 76 of this chapter.

(d) Any reopening of an Acid Rain permit shall not affect the term of the permit.

[58 FR 3650, Jan. 11, 1993, as amended at 62 FR 55485, Oct. 24, 1997]

Subpart I—Compliance Certification

§ 72.90 Annual compliance certification report.

(a) *Applicability and deadline.* For each calendar year during 1995 through 2005 in which a unit is subject to the Acid Rain emissions limitations, the designated representative of the source at which the unit is located shall submit to the Administrator, within 60 days after the end of the calendar year, an annual compliance certification report for the unit.

(b) *Contents of report.* The designated representative shall include in the annual compliance certification report under paragraph (a) of this section the following elements, in a format prescribed by the Administrator, concerning the unit and the calendar year covered by the report:

(1) Identification of the unit;

(2) For all Phase I units, the information in accordance with §§ 72.91(a) and 72.92(a) of this part;

(3) If the unit is governed by an approved Phase I extension plan, then the information in accordance with § 72.93 of this part;

(4) At the designated representative's option, the total number of allowances to be deducted for the year, using the formula in § 72.95 of this part, and the serial numbers of the allowances that are to be deducted;

(5) At the designated representative's option, for units that share a common stack and whose emissions of sulfur dioxide are not monitored separately or apportioned in accordance with part 75 of this chapter, the percentage of the total number of allowances under paragraph (b)(4) of this section for all such units that is to be deducted from each unit's compliance subaccount; and

(6) The compliance certification under paragraph (c) of this section.

(c) *Annual compliance certification.* In the annual compliance certification report under paragraph (a) of this section, the designated representative shall certify, based on reasonable inquiry of those persons with primary responsibility for operating the source and the affected units at the source in compliance with the Acid Rain Program, whether each affected unit for which the compliance certification is submitted was operated during the calendar year covered by the report in compliance with the requirements of the Acid Rain Program applicable to the unit, including:

(1) Whether the unit was operated in compliance with the applicable Acid Rain emissions limitations, including whether the unit held allowances, as of the allowance transfer deadline, in its compliance subaccount (after accounting for any allowance deductions under § 73.34(c) of this chapter) not less than the unit's total sulfur dioxide emissions during the calendar year covered by the annual report;

(2) Whether the monitoring plan that governs the unit has been maintained to reflect the actual operation and monitoring of the unit and contains all information necessary to attribute monitored emissions to the unit;

(3) Whether all the emissions from the unit, or a group of units (including the unit) using a common stack, were monitored or accounted for through the missing data procedures and reported in the quarterly monitoring reports, including whether conditionally valid data, as defined in § 72.2, were reported in the quarterly report. If conditionally valid data were reported, the owner or operator shall indicate whether the status of all conditionally valid data has been resolved and all necessary quarterly report resubmissions have been made.

(4) Whether the facts that form the basis for certification of each monitor at the unit or a group of units (including the unit) using a common stack or for using an Acid Rain Program excepted monitoring method or approved alternative monitoring method, if any, has changed; and

(5) If a change is required to be reported under paragraph (c)(4) of this section, specify the nature of the change, the reason for the change, when the change occurred, and how the unit's compliance status was determined subsequent to the change, including what method was used to determine emissions when a change mandated the need for monitor recertification.

[58 FR 3650, Jan. 11, 1993, as amended at 64 FR 28588, May 26, 1999; 70 FR 25334, May 12, 2005]

§ 72.91 Phase I unit adjusted utilization.

(a) *Annual compliance certification report.* The designated representative for each Phase I unit shall include in the annual compliance certification report the unit's adjusted utilization for the calendar year in Phase I covered by the report, calculated as follows:

Adjusted utilization = baseline − actual utilization − plan reductions + compensating generation provided to other units

where:

(1) ''Baseline'' is as defined in § 72.2 of this part.

(2) ''Actual utilization'' is the actual annual heat input (in mmBtu) of the unit for the calendar year determined

in accordance with part 75 of this chapter.

(3) ''Plan reductions'' are the reductions in actual utilization, for the calendar year, below the baseline that are accounted for by an approved reduced utilization plan. The designated representative for the unit shall calculate the ''plan reductions'' (in mmBtu) using the following formula and converting all values in Kwh to mmBtu using the actual annual average heat rate (Btu/Kwh) of the unit (determined in accordance with part 75 of this chapter) before the employment of any improved unit efficiency measures under an approved plan:

Plan reductions = reduction from energy conservation + reduction from improved unit efficiency improvements + shifts to designated sulfur-free generators + shifts to designated compensating units

where:

(i) ''Reduction from energy conservation'' is a good faith estimate of the expected kilowatt hour savings during the calendar year from all conservation measures under the reduced utilization plan and the corresponding reduction in heat input (in mmBtu) resulting from those savings. The verified amount of such reduction shall be submitted in accordance with paragraph (b) of this section.

(ii) ''Reduction from improved unit efficiency'' is a good faith estimate of the expected improvement in heat rate during the calendar year and the corresponding reduction in heat input (in mmBtu) at the Phase I unit as a result of all improved unit efficiency measures under the reduced utilization plan. The verified amount of such reduction shall be submitted in accordance with paragraph (b) of this section.

(iii) ''Shifts to designated sulfur-free generators'' is the reduction in utilization (in mmBtu), for the calendar year, that is accounted for by all sulfur-free generators designated under the reduced utilization plan in effect for the calendar year. This term equals the sum, for all such generators, of the ''shift to sulfur-free generator.'' ''Shift to sulfur-free generator'' shall equal the amount, to the extent documented under paragraph (a)(6) of this section, calculated for each generator using the following formula:

Shift to sulfur-free generator = actual sulfur-free utilization − [(average 1985–87 sulfur-free annual utilization) (1 + percentage change in dispatch system sales)]

where:

(A) ''Actual sulfur-free utilization'' is the actual annual generation (in Kwh) of the designated sulfur-free generator for the calendar year converted to mmBtus.

(B) ''Average 1985–87 sulfur-free utilization'' is the sum of annual generation (in Kwh) for 1985, 1986, and 1987 for the designated sulfur-free generator, divided by three and converted to mmBtus.

(C) ''Percentage change in dispatch system sales'' is calculated as follows:

$$\text{Percentage change in dispatch system sales} = [S_c - (\sum_{y=1985}^{1987} S_y \div 3)] \div [\sum_{y=1985}^{1987} S_y \div 3]$$

where:

S = dispatch system sales (in Kwh)

c = calendar year

y = 1985, 1986, or 1987

If the result of the formula for percentage change in dispatch system sales is less than or equal to zero, then percentage change in dispatch system sales shall be treated as zero only for purposes of paragraph (a)(3)(iii) of this section.

(D) If the result of the formula for ''shift to sulfur-free generator'' is less than or equal to zero, then ''shift to sulfur-free generator'' is zero.

(iv) ''Shifts to designated compensating units'' is the reduction in utilization (in mmBtu) for the calendar year that is accounted for by increased generation at compensating units designated under the reduced utilization

plan in effect for the calendar year. This term equals the heat rate, under paragraph (a)(3) of this section, of the unit reducing utilization multiplied by the sum, for all such compensating units, of the ''shift to compensating unit'' for each compensating unit. ''Shift to compensating unit'' shall equal the amount of compensating generation (in Kwh), to the extent documented under paragraph (a)(6) of this section, that the designated representatives of the unit reducing utilization and the compensating unit have certified (in their respective annual compliance certification reports) as the amount that will be converted to mmBtus and used, in accordance with paragraph (a)(4) of this section, in calculating the adjusted utilization for the compensating unit.

(4) ''Compensating generation provided to other units'' is the total amount of utilization (in mmBtu) necessary to provide the generation (if any) that was shifted to the unit as a designated compensating unit under any other reduced utilization plans that were in effect for the unit and for the calendar year. This term equals the heat rate, under paragraph (a)(3) of this section, of such unit multiplied by the sum of each ''shift to compensating unit'' that is attributed to the unit in the annual compliance certification reports submitted by the Phase I units under such other plans and that is certified under paragraph (a)(3)(iv) of this section.

(5) Notwithstanding paragraphs (a)(3)(i), (ii), and (iii) of this section, where two or more Phase I units include in ''plan reductions'', in their annual compliance certification reports for the calendar year, expected kilowatt hour savings or reduction in heat rate from the same specific conservation or improved unit efficiency measures or increased utilization of the same sulfur-free generator:

(i) The designated representatives of all such units shall submit with their annual reports a certification signed by all such designated representatives. The certification shall apportion the total kilowatt hour savings, reduction in heat rate, or increased utilization among such units.

(ii) Each designated representative shall include in the annual report only the respective unit's share of the total kilowatt hour savings, reduction in heat rate, or increased utilization, in accordance with the certification under paragraph (a)(5)(i) of this section.

(6)(i) Where a unit includes in ''plan reductions'' under paragraph (a)(3) of this section the increase in utilization of any sulfur-free generator, the designated representative of the unit shall submit, with the annual compliance certification report, documentation demonstrating that an amount of electrical energy at least equal to the ''shift to sulfur-free generator'' attributed to the sulfur-free generator in the annual report was actually acquired by the unit's dispatch system from the sulfur-free generator.

(ii) Where a unit includes in ''plan reductions'' under paragraph (a)(3) of this section utilization of any compensating unit, the designated representative of the unit shall submit with the annual compliance certification report, documentation demonstrating that an amount of electrical energy at least equal to the ''shift to compensating unit'' attributed to the compensating unit in the annual report was actually acquired by the unit's dispatch system from the compensating unit.

(7) Notwithstanding paragraphs (a)(3)(i), (ii), (iii), and (iv), (a)(4), and (a)(5) of this section, ''plan reductions'' minus ''compensating generation provided to other units'' shall not exceed ''baseline'' minus ''actual utilization.''

(b) *Confirmation report.* (1) If a unit's annual compliance certification report estimates any expected kilowatt hour savings or improvement in heat rate from energy conservation or improved unit efficiency measures under a reduced utilization plan, the designated representative shall submit, by July 1 of the year in which the annual report was submitted, a confirmation report. The Administrator may grant, for good cause shown, an extension of the time to file the confirmation report. The confirmation report shall include the following elements in a format prescribed by the Administrator:

(i) The verified kilowatt hour savings from each such energy conservation

measure and the verified corresponding reduction in the unit's heat input resulting from each measure during the calendar year covered by the annual report. For purposes of this paragraph (b), all values in Kwh shall be converted to mmBtu using the actual annual heat rate (Btu/Kwh) of the unit (determined in accordance with part 75 of this chapter) before the employment of any improved unit efficiency measures under an approved reduced utilization plan.

(ii) The verified reduction in the heat rate achieved by each improved unit efficiency measure and the verified corresponding reduction in the unit's heat input resulting from such measure.

(iii) For each figure under paragraphs (b)(1) (i) and (ii) of this section:

(A) Documentation (which may follow the EPA Conservation Verification Protocol) verifying specified figures to the satisfaction of the Administrator; or

(B) Certification, by a State utility regulatory authority that has ratemaking jurisdiction over the utility system that paid for the measures in accordance with § 72.43(b)(2) of this part and over rates reflecting any of the amount paid for such measures, or that meets the criteria in § 73.82(c)(1) (i) and (ii) of this chapter, that such authority verified specified figures related to demand-side measures; and

(C) Certification, by a utility regulatory authority that has ratemaking jurisdiction over the utility system that paid for the measures in accordance with § 72.43(b)(2) of this part and over rates reflecting any of the amount paid for such measures, that such authority verified specified figures related to supply-side measures, except measures relating to generation efficiency.

(iv) The sum of the verified reductions in a unit's heat input from all measures implemented at the unit to reduce the unit's heat rate (whether the measures are treated as supply-side measures or improved unit efficiency measures) shall not exceed the generation (in kwh) attributed to the unit for the calendar year times the difference between the unit's heat rate for 1987 and the unit's heat rate for the calendar year.

(2) Notwithstanding paragraph (b)(1)(i) of this section, where two or more Phase I units include in the confirmation report the verified kilowatt hour savings or reduction in heat rate from the same specific conservation or improved unit efficiency measures:

(i) The designated representatives of all such units shall submit with their confirmation reports a certification signed by all such designated representatives. The certification shall apportion the total kilowatt hour savings or reduction in heat rate among such units.

(ii) Each designated representative shall include in the confirmation report only the respective unit's share of the total savings or reduction in heat rate in accordance with the certification under paragraph (b)(2)(i) of this section.

(3) If the total, included in the confirmation report, of the amounts of verified reduction in the unit's heat input from energy conservation and improved unit efficiency measures equals the total estimated in the unit's annual compliance certification report from such measures for the calendar year, then the designated representatives shall include in the confirmation report a statement indicating that is true.

(4) If the total, included in the confirmation report, of the amounts of verified reduction in the unit's heat input from energy conservation and improved unit efficiency measures is greater than the total estimated in the unit's annual compliance certification report from such measures for the calendar year, then the designated representative shall include in the confirmation report the number of allowances to be credited to the unit's compliance subaccount calculated using the following formula:

Allowances credited = (verified heat input reduction-estimated heat input reduction) × emissions rate · 2000 lbs/ton

where:

(i) ''Verified heat input reduction'' is the total of the amounts of verified reduction in the unit's heat input (in mmBtu) from energy conservation and

improved unit efficiency measures included in the confirmation report.

(ii) ''Estimated heat input reduction'' is the total of the amounts of reduction in the unit's heat input (in mmBtu) accounted for by energy conservation and improved efficiency measures as estimated in the unit's annual compliance certification report for the calendar year.

(iii) ''Emissions rate'' is the ''emissions rate'' under § 72.92(c)(2)(v) of this part.

(iv) The allowances credited shall not exceed the total number of allowances deducted from the unit's compliance subaccount for the calendar year in accordance with §§ 72.92(a) and (c) and 73.35(b) of this chapter.

(5) If the total, included in the confirmation report, of the amount of verified reduction in the unit's heat input for energy conservation and improved unit efficiency measures is less than the total estimated in the unit's annual compliance certification report for such measures for the calendar year, then the designated representative shall include in the confirmation report the number of allowances to be deducted from the unit's compliance subaccount calculated in accordance with this paragraph (b)(5).

(i) If any allowances were deducted from the unit's compliance subaccount for the calendar year in accordance with §§ 72.92(a) and (c) and 73.35(b) of this chapter, then the number of allowances to be deducted under paragraph (b)(5) of this section equals the absolute value of the result of the formula for allowances credited under paragraph (b)(4) of this section (excluding paragraph (b)(4)(iv) of this section).

(ii) If no allowances were deducted from the unit's compliance subaccount for the calendar year in accordance with §§ 72.92(a) and (c) and 73.35(b) of this chapter:

(A) The designated representative shall recalculate the unit's adjusted utilization in accordance with paragraph (a) of this section, replacing the amounts for reduction from energy conservation and reduction from improved unit efficiency by the amount for verified heat input reduction. ''Verified heat input reduction'' is the total of the amounts of verified reduction in the unit's heat input (in mmBtu) from energy conservation and improved unit efficiency measures included in the confirmation report.

(B) After recalculating the adjusted utilization under paragraph (b)(5)(ii)(A) of this section for all Phase I units that are in the unit's dispatch system and to which paragraph (b)(5) of this section is applicable, the designated representative shall calculate the number of allowances to be surrendered in accordance with § 72.92(c)(2) using the recalculated adjusted utilizations of such Phase I units.

(C) The allowances to be deducted under paragraph (b)(5) of this section shall equal the amount under paragraph (b)(5)(ii)(B) of this section, *provided* that if the amount calculated under this paragraph (b)(5)(ii)(C) is equal to or less than zero, then the amount of allowances to be deducted is zero.

(6) The Administrator will determine the amount of allowances that would have been included in the unit's compliance subaccount and the amount of excess emissions of sulfur dioxide that would have resulted if the deductions made under § 73.35(b) of this chapter had been based on the verified, rather than the estimated, reduction in the unit's heat input from energy conservation and improved unit efficiency measures.

(7) The Administrator will determine whether the amount of excess emissions of sulfur dioxide under paragraph (b)(6) of this section differs from the amount of excess emissions determined under § 73.35(b) of this chapter based on the annual compliance certification report. If the amounts differ, the Administrator will determine: The number of allowances that should be deducted to offset any increase in excess emissions or returned to account for any decrease in excess emissions; and the amount of excess emissions penalty (excluding interest) that should be paid or returned to account for the change in excess emissions. The Administrator will deduct immediately from the unit's compliance subaccount the amount of allowances that he or she determines is

necessary to offset any increase in excess emissions or will return immediately to the unit's compliance subaccount the amount of allowances that he or she determines is necessary to account for any decrease in excess emissions. The designated representative may identify the serial numbers of the allowances to be deducted or returned. In the absence of such identification, the deduction will be on a first-in, first-out basis under § 73.35(b)(2) of this chapter and the return will be at the Administrator's discretion.

(8) If the designated representative of a unit fails to submit on a timely basis a confirmation report (in accordance with paragraph (b) of this section) with regard to the estimate of expected kilowatt hour savings or improvement in heat rate from any energy conservation or improved unit efficiency measure under the reduced utilization plan, then the Administrator will reject such estimate and correct it to equal zero in the unit's annual compliance certification report that includes that estimate. The Administrator will deduct immediately, on a first-in, first-out basis under § 73.35(c)(2) of this chapter, the amount of allowances that he or she determines is necessary to offset any increase in excess emissions of sulfur dioxide that results from the correction and require the owners and operators to pay an excess emission penalty in accordance with part 77 of this chapter.

[58 FR 3650, Jan. 11, 1993, as amended at 58 FR 40747, July 30, 1993; 59 FR 60231, Nov. 22, 1994; 60 FR 18470, Apr. 11, 1995; 62 FR 55485, Oct. 24, 1997]

§ 72.92 Phase I unit allowance surrender.

(a) *Annual compliance certification report.* If a Phase I unit's adjusted utilization for the calendar year in Phase I under § 72.91(a) is greater than zero, then the designated representative shall include in the annual compliance certification report the number of allowances that shall be surrendered for adjusted utilization using the formula in paragraph (c) of this section and the calculations that were performed to obtain that number.

(b) *Other submissions.* (1) [Reserved]

(2)(i) If any Phase I unit in a dispatch system is governed during the calendar year by an approved reduced utilization plan relying on sulfur-free generation, then the designated representatives of all affected units in such dispatch system shall jointly submit, within 60 days of the end of the calendar year, a dispatch system data report that includes the following elements in a format prescribed by the Administrator:

(A) The name of the dispatch system as reported under § 72.33;

(B) The calculation of ''percentage change in dispatch system sales'' under § 72.91(a)(3)(iii)(C);

(C) A certification that each designated representative will use this figure, as appropriate, in its annual compliance certification report and will submit upon request the data supporting the calculation; and

(D) The signatures of all the designated representatives.

(ii) If any Phase I unit in a dispatch system has adjusted utilization greater than zero for the calendar year, then the designated representatives of all Phase I units in such dispatch system shall jointly submit, within 60 days of the end of the calendar year, a dispatch system data report that includes the following elements in a format prescribed by the Administrator:

(A) The name of the dispatch system as reported under § 72.33;

(B) The calculation of ''percentage change in dispatch system sales'' under § 72.91(a)(3)(iii)(C);

(C) The calculation of ''dispatch system adjusted utilization'' under paragraph (c)(2)(i) of this section;

(D) The calculation of ''dispatch system aggregate baseline'' under paragraph (c)(2)(ii) of this section;

(E) The calculation of ''fraction of generation within dispatch system'' under paragraph (c)(2)(v)(A) of this section;

(F) The calculation of ''dispatch system emissions rate'' under paragraph (c)(2)(v)(B) of this section;

(G) The calculation of ''fraction of generation from non-utility generators'' under paragraph (c)(2)(v)(C) of this section;

(H) The calculation of ''non-utility generator average emissions rate ''

under paragraph (c)(2)(v)(F) of this section;

(I) A certification that each designated representative will use these figures, as appropriate, in its annual compliance certification report and will submit upon request the data supporting these calculations; and

(J) The signatures of all the designated representatives.

(c) *Allowance surrender formula.* (1) As provided under the allowance surrender formula in paragraph (c)(2) of this section:

(i) Allowances are not surrendered for deduction for the portion of adjusted utilization accounted for by:

(A) Shifts in generation from the unit to other Phase I units;

(B) A dispatch-system-wide sales decline;

(C) Plan reductions under a reduced utilization plan as calculated under § 72.91; and

(D) Foreign generation.

(ii) Allowances are surrendered for deduction for the portion of adjusted utilization that is not accounted for under paragraph (c)(1)(i) of this section.

(2) The designated representative shall surrender for deduction the number of allowances calculated using the following formula:

Allowances surrendered = [dispatch system adjusted utilization + (dispatch system aggregate baseline × percentage change in dispatch system sales)] × unit's share × emissions rate · 2000 lbs/ton.

If the result of the formula for ''allowances surrendered'' is less than or equal to zero, then no allowances are surrendered.

(i) *Calculating dispatch system adjusted utilization.* ''Dispatch system adjusted utilization'' (in mmBtu) is the sum of the adjusted utilization under § 72.91(a) for all Phase I units in the dispatch system. If ''dispatch system adjusted utilization'' is less than or equal to zero, then no allowances are surrendered by any unit in that dispatch system.

(ii) *Calculating dispatch system aggregate baseline.* ''Dispatch system aggregate baseline'' is the sum of the baselines (as defined in § 72.2 of this chapter) for all Phase I units in the dispatch system.

(iii) *Calculating percentage change in dispatch system sales.* ''Percentage change in dispatch system sales'' is the ''percentage change in dispatch system sales'' under § 72.91 (a)(3)(iii)(C); *provided* that if result of the formula in § 72.91(a)(3)(iii)(C) is greater than or equal to zero, the value shall be treated as zero only for purposes of paragraph (c)(2) of this section.

(iv) *Calculating unit's share.* ''Unit's share'' is the unit's adjusted utilization divided by the sum of the adjusted utilization for all Phase I units within the dispatch system that have adjusted utilization of greater than zero and is calculated as follows:

$$\textit{Unit's share} = \frac{U_{unit}}{\sum_{i=1}^{m} U_i}$$

where:

(A) U_{unit} = the unit's adjusted utilization for the calendar year;

(B) U_i = the adjusted utilization of a Phase I unit in the dispatch system for the calendar year; and

(C) m = all Phase I units in the dispatch system having an adjusted utilization greater than 0 for the calendar year.

(v) *Calculating emissions rate.* ''Emissions rate'' (in lbs/mmBtu) is the weighted average emissions rate for sulfur dioxide of all units and generators, within and outside the dispatch system, that contributed to the dispatch system's electrical output for the year, calculated as follows:

Emissions rate = [fraction of generation within dispatch system × dispatch system emissions rate] + [fraction of generation from non-utility generators × non-utility generator average emissions rate] + [fraction of generation outside dispatch system × fraction of non-Phase 1 and non-foreign generation in NERC region × NERC region emissions rate]

where:

(A) ''Fraction of generation within dispatch system'' is the fraction of the

dispatch system's total sales accounted for by generation from units and generators within the dispatch system, other than generation from non-utility generators. This term equals the total generation (in Kwh) by all units and generators within the dispatch system for the calendar year minus the total non-utility generation from non-utility generators within the dispatch system for the calendar year and divided by the total sales (in Kwh) by the dispatch system for the calendar year.

(B) Dispatch system emissions rate'' is the weighted average rate (in lbs/mmBtu) for the dispatch system calculated as follows:

Dispatch system emissions rate =

$$\sum_{i=1}^{k} g_i \, r_i \div \sum_{i=1}^{k} g_i$$

where:

g_i = the difference between a Phase II unit's actual utilization for the calendar year and that Phase II unit's baseline. If that difference is less than or equal to zero, then the difference shall be treated as zero only for purposes of paragraph (c)(2)(v) of this section and that unit will be excluded from the calculation of dispatch system emissions rate. Notwithstanding the prior sentence, if the actual utilization of each Phase II unit for the year is equal to or less than the baseline, then g_i shall equal a Phase II unit's actual utilization for the year. Notwithstanding any provision in this paragraph (c)(2)(v)(B) to the contrary, if the actual utilization of each Phase II unit in the dispatch system is zero or there are no Phase II units in the dispatch system, then the dispatch system emissions rate shall equal the fraction of non-Phase I and non-foreign generation in the NERC region multiplied by the NERC region emissions rate.

r_i = a Phase II unit's emissions rate (in lbs/mmBtu), determined in accordance with part 75 of this chapter, for the calendar year.

k = number of Phase II units in the dispatch system.

(C) ''Fraction of generation from non-utility generators'' is the fraction of the dispatch system's total sales accounted for by generation acquired from non-utility generators within or outside the dispatch system. This term equals the total non-utility generation from non-utility generators (within or outside the dispatch system) for the calendar year divided by the total sales (in Kwh) by the dispatch system for the calendar year.

(D) ''Non-utility generator'' is a power production facility (within or outside the dispatch system) that is not an affected unit or a sulfur-free generator and that has a ''non-utility generator emissions rate'' for the calendar year under paragraph (c)(2)(v)(F) of this section.

(E) ''Non-utility generation'' is the generation (in Kwh) that the dispatch system acquired from a non-utility generator during the calendar year as required by Federal or State law or an order of a utility regulatory authority or under a contract awarded as the result of a power purchase solicitation required by Federal or State law or an order of a utility regulatory authority.

(F) ''Non-utility generator average emissions rate'' is the weighted average rate (in lbs/mmBtu) for the non-utility generators calculated as follows:

Non-utility generator average emissions rate =

$$\sum_{i=1}^{n} N_i \, R_i \div \sum_{i=1}^{n} N_i$$

where:

N_i = non-utility generation from a non-utility generator;

R_i = non-utility generator emissions rate for the calendar year for a non-utility generator, which shall equal the most stringent federally enforceable or State enforceable SO_2 emissions limitation applicable for the calendar year to such power production facility, as determined in accordance with paragraphs (c)(2)(v)(F) (*1*), (*2*), and (*3*) of this section; and

n = number of non-utility generators from which the dispatch system acquired non-utility generation. If n equals zero, then the non-utility generator average emissions rate shall be treated as zero only for purposes of paragraph (c)(2)(v) of this section.

(*1*) For purposes of determining the most stringent emissions limitation, applicable emissions limitations shall be converted to lbs/mmBtu in accordance with appendix B of this part. If an applicable emissions limitation cannot be converted to a unit-specific limitation in lbs/mmBtu under appendix B of this part, then the limitation shall not

be used in determining the most stringent emissions limitation. Where the power production facility is subject to different emissions limitations depending on the type of fuel it uses during the calendar year, the most stringent emissions limitation shall be determined separately with regard to each type of fuel and the resulting limitation with the highest amount of lbs/mmBtu shall be treated as the facility's most stringent federally enforceable or State enforceable emissions limitation.

(*2*) If there is no applicable emissions limitation that can be used in determining the most stringent emissions limitation under paragraph (c)(2)(v)(F)(*1*) of this section, then the power production facility has no non-utility generator emissions rate for purposes of paragraphs (c)(2)(v) (D) and (F) of this section and the generation from the facility shall be treated, for purposes of this paragraph (c)(2)(v) as generation from units and generators within the dispatch system if the facility is within the dispatch system or as generation from units and generators outside the dispatch system if the facility is outside the dispatch system.

(*3*) Notwithstanding paragraphs (c)(2)(v)(F) (*1*) and (*2*) of this section, if the power production facility is authorized under Federal or State law to use only natural gas as fuel, then the most stringent emissions limitation for the facility for the calendar year shall be deemed to be 0.0006 lbs/mmBtu.

(G) ''Fraction of generation outside dispatch system'' = 1 − fraction of generation within dispatch system − fraction of generation from non-utility generators.

(H) ''Fraction of non-Phase I and non-foreign generation in NERC region'' is the portion of the NERC region's total sales generated by units and generators other than Phase I units or foreign sources in the unit's NERC region in 1985, as set forth in table 1 of this section.

(I) ''NERC region emissions rate'' is the weighted average emission rate (in lbs/mmBtu) for the unit's NERC region in 1985, as set forth in table 1 of this section.

TABLE 1—NERC REGION GENERATION AND EMISSIONS RATE IN 1985

NERC region	Fraction of non-phase I and non-foreign generation in NERC region	NERC weighted average emissions rate (lbs/mmBtu)
WSCC	0.847	0.466
SPP	0.948	0.647
SERC	0.749	1.315
NPCC	0.423	1.058
MAPP	0.725	1.171
MAIN	0.682	1.495
MAAC	0.750	1.599
ERCOT	1.000	0.491
ECAR	0.549	1.564

[58 FR 3650, Jan. 11, 1993, as amended at 58 FR 40747, July 30, 1993; 60 FR 18470, Apr. 11, 1995]

§ 72.93 Units with Phase I extension plans.

Annual compliance certification report. The designated representative for a control unit governed by a Phase I extension plan shall include in the unit's annual compliance certification report for calendar year 1997, the start-up test results upon which the vendor is released from liability under the vendor certification of guaranteed sulfur dioxide removal efficiency under § 72.42(c)(12).

§ 72.94 Units with repowering extension plans.

(a) *Design and engineering and contract requirements.* No later than January 1, 2000, the designated representative of a unit governed by an approved repowering plan shall submit to the Administrator and the permitting authority:

(1) Satisfactory documentation of a preliminary design and engineering effort.

(2) A binding letter agreement for the executed and binding contract (or for each in a series of executed and binding contracts) for the majority of the equipment to repower the unit using the technology conditionally approved by the Administrator under § 72.44(d)(3).

(3) The letter agreement under paragraph (a)(2) of this section shall be signed and dated by each party and specify:

(i) The parties to the contract;

(ii) The date each party executed the contract;

(iii) The unit to which the contract applies;

(iv) A brief list identifying each provision of the contract;

(v) Any dates to which the parties agree, including construction completion date;

(vi) The total dollar amount of the contract; and

(vii) A statement that a copy of the contract is on site at the source and will be submitted upon written request of the Administrator or the permitting authority.

(b) *Removal from operation to repower.* The designated representative of a unit governed by an approved repowering plan shall notify the Administrator in writing at least 60 days in advance of the date on which the existing unit is to be removed from operation so that the qualified repowering technology can be installed, or is to be replaced by another unit with the qualified repowering technology, in accordance with the plan.

(c) *Commencement of operation.* Not later than 60 days after the unit repowered under an approved repowering plan commences operation at full load, the designated representative of the unit shall submit a report comparing the actual hourly emissions and percent removal of each pollutant controlled at the unit to the actual hourly emissions and percent removal at the existing unit under the plan prior to repowering, determined in accordance with part 75 of this chapter.

(d) *Decision to terminate.* If at any time before the end of the repowering extension the owners and operators decide to terminate good faith efforts to design, construct, and test the qualified repowering technology on the unit to be repowered under an approved repowering plan, then the designated representative shall submit a notice to the Administrator by the earlier of the end of the repowering extension or a date within 30 days of such decision, stating the date on which the decision was made.

§ 72.95 Allowance deduction formula.

The following formula shall be used to determine the total number of allowances to be deducted for the calendar year from the allowances held in an affected source's compliance account as of the allowance transfer deadline applicable to that year:

Total allowances deducted = Tons emitted + Allowances surrendered for underutilization + Allowances deducted for Phase I extensions + Allowances deducted for substitution or compensating units

where:

(a) ''Tons emitted'' is the total tons of sulfur dioxide emitted by the affected units at the source during the calendar year, as reported in accordance with part 75 of this chapter.

(b) ''Allowances surrendered for underutilization'' is the total number of allowances calculated in accordance with § 72.92 (a) and (c).

(c) ''Allowances deducted for Phase I extensions'' is the total number of allowances calculated in accordance with § 72.42(f)(1)(i).

(d) ''Allowances deducted for substitution or compensating units'' is the total number of allowances calculated in accordance with the surrender requirements specified under § 72.41(d)(3) or (e)(1)(iii)(B) or § 72.43(d)(2).

[58 FR 3650, Jan. 11, 1993, as amended at 62 FR 55485, Oct. 24, 1997; 70 FR 25334, May 12, 2005]

§ 72.96 Administrator's action on compliance certifications.

(a) The Administrator may review, and conduct independent audits concerning, any compliance certification and any other submission under the Acid Rain Program and make appropriate adjustments of the information in the compliance certifications and other submissions.

(b) The Administrator may deduct allowances from or return allowances to a source's compliance account in accordance with part 73 of this chapter based on the information in the compliance certifications and other submissions, as adjusted.

[58 FR 3650, Jan. 11, 1993, as amended at 70 FR 25334, May 12, 2005]

APPENDIX A TO PART 72—METHODOLOGY FOR ANNUALIZATION OF EMISSIONS LIMITS

For the purposes of the Acid Rain Program, 1985 emissions limits must be expressed in pounds of SO_2 per million British Thermal Unit of heat input (lb/mmBtu) and expressed on an annual basis.

Annualization factors are used to develop annual equivalent SO_2 limits as required by section 402(18) of the CAA. Many emission limits are enforced on a shorter term basis (or averaging period) than annually. Because of the variability of sulfur in coal and, in some cases, scrubber performance, meeting a particular limit with an averaging period of less than a year and at a specified statutory emissions level would require a lower annual average SO_2 emission rate (or annual equivalent SO_2 limit) than would the shorter term statutory limit. EPA has selected a compliance level of one exceedance per 10 years. For example, an SO_2 emission limit of 1.2 lbs/MMBtu, enforced for a scrubbed unit over a 7-day averaging period, would result in an annualized SO_2 emission limit of 1.16 lbs/MMBtu. In general, the shorter the averaging period, the lower the annual equivalent would be. Thus, the annualization of limits is established by multiplying each federally enforceable limit by an annualization factor that is determined by the averaging period and whether or not it's a scrubbed unit.

TABLE A–1—SO_2 EMISSION AVERAGING PERIODS AND ANNUALIZATION FACTORS

Definition	Annualization factor	
	Scrubbed Unscrubbed	
	Unit	Unit
Oil/gas unit	1.00	1.00
<=1 day	0.93	0.89
1 week	0.97	0.92
30 days	1.00	0.96
90 days	1.00	1.00
1 year	1.00	1.00
Not specified	0.93	0.89
At all times	0.93	0.89
Coal unit: No Federal limit or limit unknown	1.00	1.00

APPENDIX B TO PART 72—METHODOLOGY FOR CONVERSION OF EMISSIONS LIMITS

For the purposes of the Acid Rain Program, all emissions limits must be expressed in pounds of SO_2 per million British Thermal Unit of heat input (lb/mmBtu).

The factor for converting pounds of sulfur to pounds of SO_2 is based on the molecular weights of sulfur (32) and SO_2 (64). Limits expressed as percentage of sulfur or parts per million (ppm) depend on the energy content of the fuel and thus may vary, depending on several factors such as fuel heat content and atmospheric conditions. Generic conversions for these limits are based on the assumed average energy contents listed in table A–2. In addition, limits in ppm vary with boiler operation (e.g., load and excess air); generic conversions for these limits assume, conservatively, very low excess air. The remaining factors are based on site-specific heat rates and capacities to develop conversions for Btu per hour. Standard conversion factors for residual oil are 42 gal/bbl and 7.88 lbs/gal.

TABLE B–1—CONVERSION FACTORS

[Emission limits converted to lbs SO_2/MMBtu by multiplying as below]

Unit measurement	Plant fuel type			
	Bituminous coal	Subbituminous coal	Lignite coal	Oil
Lbs sulfur/ MMBtu	2.0	2.0	2.0	2.0
% sulfur in fuel	1.66	2.22	2.86	1.07
Ppm SO_2	0.00287	0.00384	.....	0.00167
Ppm sulfur in fuel	.....	.....	.....	0.00334
Tons SO_2/hour	2,000,000/(HEATRATE*SUMNDCAP*capacity factor) [1]			
Lbs SO_2/hour	1,000/(HEATRATE*SUMNDCAP*capacity factor) [1]			

[1] In these cases, if the limit was specified as the ''site'' limit, the summer net dependable capability for the entire plant is used; otherwise, the summer net dependable capability for the unit is used. For units listed in the NADB, ''HEATRATE'' shall be that listed in the NADB under that field and ''SUMNDCAP'' shall be that listed in the NADB under that field. For units not listed in the NADB, ''HEATRATE'' is the generator net full load heat rate reported on Form EIA–860 and ''SUMNDCAP'' is the summer net dependable capability of the generator (in MWe) as reported on Form EIA–860.

TABLE B–2—ASSUMED AVERAGE ENERGY CONTENTS

Fuel type	Average heat content
Bituminous Coal	24 MMBtu/ton.
Subbituminous Coal	18 MMBtu/ton.
Lignite Coal	14 MMBtu/ton.
Residual Oil	6.2 MMBtu/bbl.

APPENDIX C TO PART 72—ACTUAL 1985 YEARLY SO_2 EMISSIONS CALCULATION

The equation used to calculate the yearly SO_2 emissions (SO2) is as follows:

SO2 = (coal SO_2 emissions) + (oil SO_2 emissions) (in tons)

If gas is the only fuel, gas emissions are defaulted to 0.

Each fuel type SO_2 emissions is calculated on a yearly basis, using the equation:

fuel SO_2 emissions (in tons) = (yrly wtd. av. fuel sulfur %) × (AP–42 fact.) × (1 − scrb. effic. %/100) × (units conver. fact.) × (yearly fuel burned)

For coal, the yearly fuel burned is in tons/yr and the AP–42 factor (which accounts for the ash retention of sulfur in coal), in lbs SO_2 ton coal, is by coal type:

Coal type	AP–42 factor
Bituminous, anthracite	39 lbs/ton
Subbituminous	35
Lignite	30

For oil, the yearly fuel burned is in gal/yr. If it is in bbl/yr, convert using 42 gal/bbl oil. The AP–42 factor (which accounts for the oil density), in lbs SO_2/thousand gal oil, is by oil type:

Oil type	AP–42 factor
Distillate (light)	142 lbs/1,000 gal
Residual (heavy)	157

For all fuel, the units conversion factor is 1 ton/2000 lbs.

APPENDIX D TO PART 72—CALCULATION OF POTENTIAL ELECTRIC OUTPUT CAPACITY

The potential electrical output capacity is calculated from the maximum design heat input from the boiler by the following equation:

$$\frac{\text{max. design heat input}}{3} \times \frac{\times 1 \text{ kw-hr}}{3413 \text{ Btu}} \times \frac{\times 1 \text{ MWe}}{1000 \text{ Kw}}$$

For example:

(1) Assume a boiler with a maximum design heat input capacity of 340 million Btu/hr.

(2) One-third of the maximum design heat input capacity is 113.3 mmBtu/hr. The one-third factor relates to the thermodynamic efficiency of the boiler.

(3) To express this in MWe, the standards conversion of 3413 Btu to 1 kw-hr is used: 113.3×10^6 Btu/hr×1 kw-hr / 3413 Btu×1 MWe / 1000 kw=33.2 MWe

[58 FR 15649, Mar. 23, 1993]

PART 73—SULFUR DIOXIDE ALLOWANCE SYSTEM

Subpart A—Background and Summary

Sec.
73.1 Purpose and scope.
73.2 Applicability.
73.3 General.

Subpart B—Allowance Allocations

73.10 Initial allocations for phase I and phase II.
73.11 [Reserved]
73.12 Rounding procedures.
73.13 Procedures for submittals.
73.14–73.17 [Reserved]
73.18 Submittal procedures for units commencing commercial operation during the period from January 1, 1993, through December 31, 1995.
73.19 Certain units with declining SO_2 rates.
73.20 Phase II early reduction credits.
73.21 Phase II repowering allowances.
73.22–73.24 [Reserved]
73.25 Phase I extension reserve.
73.26 Conservation and renewable energy reserve.
73.27 Special allowance reserve.

Subpart C—Allowance Tracking System

73.30 Allowance tracking system accounts.
73.31 Establishment of accounts.
73.32 [Reserved]
73.33 Authorized account representative.
73.34 Recordation in accounts.
73.35 Compliance.
73.36 Banking.
73.37 Account error.
73.38 Closing of accounts.

Subpart D—Allowance Transfers

73.50 Scope and submission of transfers.
73.51 [Reserved]
73.52 EPA recordation.
73.53 Notification.

Subpart E—Auctions, Direct Sales, and Independent Power Producers Written Guarantee

73.70 Auctions.
73.71 Bidding.
73.72 Direct sales.
73.73 Delegation of auctions and sales and termination of auctions and sales.

Subpart F—Energy Conservation and Renewable Energy Reserve

73.80 Operation of allowance reserve program for conservation and renewable energy.
73.81 Qualified conservation measures and renewable energy generation.
73.82 Application for allowances from reserve program.
73.83 Secretary of Energy's action on net income neutrality applications.
73.84 Administrator's action on applications.
73.85 Administrator review of the reserve program.
73.86 State regulatory autonomy.
APPENDIX A TO SUBPART F—LIST OF QUALIFIED ENERGY CONSERVATION MEASURES, QUALIFIED RENEWABLE GENERATION, AND MEASURES APPLICABLE FOR REDUCED UTILIZATION

Subpart G—Small Diesel Refineries

73.90 Allowance allocations for small diesel refineries.

AUTHORITY: 42 U.S.C. 7601 and 7651 *et seq.*

Subpart A—Background and Summary

SOURCE: 58 FR 3687, Jan. 11, 1993, unless otherwise noted.

§ 73.1 Purpose and scope.

The purpose of this part is to establish the requirements and procedures for the following:

(a) The allocation of sulfur dioxide emissions allowances;

(b) The tracking, holding, and transfer of allowances;

(c) The deduction of allowances for purposes of compliance and for purposes of offsetting excess emissions pursuant to parts 72 and 77 of this chapter;

(d) The sale of allowances through EPA-sponsored auctions and a direct sale, including the independent power producers written guarantee program; and

(e) The application for, and distribution of, allowances from the Conservation and Renewable Energy Reserve.

(f) The application for, and distribution of, allowances for desulfurization of fuel by small diesel refineries.

[58 FR 3687, Jan. 11, 1993, as amended at 58 FR 15650, Mar. 23, 1993]

§ 73.2 Applicability.

The following parties shall be subject to the provisions of this part:

(a) Owners, operators, and designated representatives of affected sources and affected units pursuant to § 72.6 of this chapter;

(b) Any new independent power producer as defined in section 416 of the Act and § 72.2 of this chapter, except as provided in section 405(g)(6) of the Act;

(c) Any owner of an affected unit who may apply to receive allowances under the Energy Conservation and Renewable Energy Reserve Program established in accordance with section 404(f) of the Act;

(d) Any small diesel refinery as defined in § 72.2 of this chapter, and

(e) Any other person, as defined in § 72.2 of this chapter, who chooses to purchase, hold, or transfer allowances as provided in section 403(b) of the Act.

§ 73.3 General.

Part 72 of this chapter, including §§ 72.2 (definitions), 72.3 (measurements, abbreviations, and acronyms), 72.4 (Federal authority), 72.5 (State authority), 72.6 (applicability), 72.7 (new units exemption), 72.8 (retired unit exemption), 72.9 (standard requirements), 72.10 (availability of information), and 72.11 (computation of time) of part 72, subpart A of this chapter, shall apply to this part. The procedures for appeals of decisions of the Administrator under this part are contained in part 78 of this chapter. Sections 73.3 (Definitions) and 73.4 (Deadlines), which were previously published with subpart E of this part—''Auctions, Direct Sales, and Independent Power Producers Written

Guarantee'', are codified at §§72.2 and 72.12 of this chapter, respectively.

Subpart B—Allowance Allocations

SOURCE: 58 FR 3687, Jan. 11, 1993, unless otherwise noted.

§ 73.10 Initial allocations for phase I and phase II.

(a) *Phase I allowances.* The Administrator will allocate allowances to the compliance account for each source that includes a unit listed in table 1 of this section in the amount listed in column A to be held for the years 1995 through 1999.

TABLE 1—PHASE I ALLOWANCE ALLOCATIONS

State name	Plant name	Boiler	Column A final phase 1 allocation	Column B auction and sales reserve
Alabama	Colbert	1	13213	357
		2	14907	403
		3	14995	405
		4	15005	405
		5	36202	978
	E.C. Gaston	1	17624	476
		2	18052	488
		3	17828	482
		4	18773	507
		5	58265	1575
Florida	Big Bend	BB01	27662	748
		BB02	26387	713
		BB03	26036	704
	Crist	6	18695	505
		7	30846	834
Georgia	Bowen	1BLR	54838	1482
		2BLR	53329	1441
		3BLR	69862	1888
		4BLR	69852	1888
	Hammond	1	8549	231
		2	8977	243
		3	8676	234
		4	36650	990
	Jack McDonough	MB1	19386	524
		MB2	20058	542
	Wansley	1	68908	1862
		2	63708	1722
	Yates	Y1BR	7020	190
		Y2BR	6855	185
		Y3BR	6767	183
		Y4BR	8676	234
		Y5BR	9162	248
		Y6BR	24108	652
		Y7BR	20915	565
Illinois	Baldwin	1	46052	1245
		2	48695	1316
		3	46644	1261
	Coffeen	01	12925	349
		02	39102	1057
	Grand Tower	09	6479	175
	Hennepin	2	20182	545
	Joppa Steam	1	12259	331
		2	10487	283
		3	11947	323
		4	11061	299
		5	11119	301
		6	10341	279
	Kincaid	1	34564	934
		2	37063	1002
	Meredosia	05	15227	411
	Vermilion	2	9735	263
Indiana	Bailly	7	12256	331
		8	17134	463
	Breed	1	20280	548
	Cayuga	1	36581	989
		2	37415	1011
	Clifty Creek	1	19620	530
		2	19289	521
		3	19873	537

TABLE 1—PHASE I ALLOWANCE ALLOCATIONS—Continued

State name	Plant name	Boiler	Column A final phase 1 allocation	Column B auction and sales reserve
		4	19552	528
		5	18851	509
		6	19844	536
	Elmer W. Stout	50	4253	115
		60	5229	141
		70	25883	699
	F.B. Culley	2	4703	127
		3	18603	503
	Frank E. Ratts	1SG1	9131	247
		2SG1	9296	251
	Gibson	1	44288	1197
		2	44956	1215
		3	45033	1217
		4	44200	1195
	H.T. Pritchard	6	6325	171
	Michigan City	12	25553	691
	Petersburg	1	18011	487
		2	35496	959
	R. Gallagher	1	7115	192
		2	7980	216
		3	7159	193
		4	8386	227
	Tanners Creek	U4	27209	735
	Wabash River	1	4385	118
		2	3135	85
		3	4111	111
		5	4023	109
		6	13462	364
	Warrick	4	29577	799
Iowa	Burlington	1	10428	282
	Des Moines	11	2259	61
	George Neal	1	2571	69
	Milton L. Kapp	2	13437	363
	Prairie Creek	4	7965	215
	Riverside	9	3885	105
Kansas	Quindaro	2	4109	111
Kentucky	Coleman	C1	10954	296
		C2	12502	338
		C3	12015	325
	Cooper	1	7254	196
		2	14917	403
	E.W. Brown	1	6923	187
		2	10623	287
		3	25413	687
	Elmer Smith	1	6348	172
		2	14031	379
	Ghent	1	27662	748
	Green River	5	7614	206
	H.L. Spurlock	1	22181	599
	HMP&L Station 2	H1	12989	351
		H2	11986	324
	Paradise	3	57613	1557
	Shawnee	10	9902	268
Maryland	C.P. Crane	1	10058	272
		2	8987	243
	Chalk Point	1	21333	577
		2	23690	640
	Morgantown	1	34332	928
		2	37467	1013
Michigan	J.H. Campbell	1	18773	507
		2	22453	607
Minnesota	High Bridge	6	4158	112
Mississippi	Jack Watson	4	17439	471
		5	35734	966
Missouri	Asbury	1	15764	426
	James River	5	4722	128
	LaBadie	1	39055	1055
		2	36718	992
		3	39249	1061
		4	34994	946
	Montrose	1	7196	194

TABLE 1—PHASE I ALLOWANCE ALLOCATIONS—Continued

State name	Plant name	Boiler	Column A final phase 1 allocation	Column B auction and sales reserve
		2	7984	216
		3	9824	266
	New Madrid	1	27497	743
		2	31625	855
	Sibley	3	15170	410
	Sioux	1	21976	594
		2	23067	623
	Thomas Hill	MB1	9980	270
		MB2	18880	510
New Hampshire	Merrimack	1	9922	268
		2	21421	579
New Jersey	B.L. England	1	8822	238
		2	11412	308
New York	Dunkirk	3	12268	332
		4	13690	370
	Greenidge	6	7342	198
	Milliken	1	10876	294
		2	12083	327
	Northport	1	19289	521
		2	23476	634
		3	25783	697
	Port Jefferson	3	10194	276
		4	12006	324
Ohio	Ashtabula	7	18351	496
	Avon Lake	11	12771	345
		12	33413	903
	Cardinal	1	37568	1015
		2	42008	1135
	Conesville	1	4615	125
		2	5360	145
		3	6029	163
		4	53463	1445
	Eastlake	1	8551	231
		2	9471	256
		3	10984	297
		4	15906	430
		5	37349	1009
	Edgewater	13	5536	150
	Gen. J.M. Gavin	1	86690	2343
		2	88312	2387
	Kyger Creek	1	18773	507
		2	18072	488
		3	17439	471
		4	18218	492
		5	18247	493
	Miami Fort	5–1	417	11
		5–2	417	11
		6	12475	337
		7	42216	1141
	Muskingum River	1	16312	441
		2	15533	420
		3	15293	413
		4	12914	349
		5	44364	1199
	Niles	1	7608	206
		2	9975	270
	Picway	9	5404	146
	R.E. Burger	5	3371	91
		6	3371	91
		7	11818	319
		8	13626	368
	W.H. Sammis	5	26496	716
		6	43773	1183
		7	47380	1280
	Walter C. Beckjord	5	9811	265
		6	25235	682
Pennsylvania	Armstrong	1	14031	379
		2	15024	406
	Brunner Island	1	27030	730
		2	30282	818
		3	52404	1416

TABLE 1—PHASE I ALLOWANCE ALLOCATIONS—Continued

State name	Plant name	Boiler	Column A final phase 1 allocation	Column B auction and sales reserve
	Cheswick	1	38139	1031
	Conemaugh	1	58217	1573
		2	64701	1749
	Hatfield's Ferry	1	36835	995
		2	36338	982
		3	39210	1060
	Martins Creek	1	12327	333
		2	12483	337
	Portland	1	5784	156
		2	9961	269
	Shawville	1	10048	272
		2	10048	272
		3	13846	374
		4	13700	370
	Sunbury	3	8530	230
		4	11149	301
Tennessee	Allen	1	14917	403
		2	16329	441
		3	15258	412
	Cumberland	1	84419	2281
		2	92344	2496
	Gallatin	1	17400	470
		2	16855	455
		3	19493	527
		4	20701	559
	Johnsonville	1	7585	205
		10	7351	199
		2	7828	212
		3	8189	221
		4	7780	210
		5	8023	217
		6	7682	208
		7	8744	236
		8	8471	229
		9	6894	186
West Virginia	Albright	3	11684	316
	Fort Martin	1	40496	1094
		2	40116	1084
	Harrison	1	47341	1279
		2	44936	1214
		3	40408	1092
	Kammer	1	18247	493
		2	18948	512
		3	16932	458
	Mitchell	1	42823	1157
		2	44312	1198
	M.T. Storm	1	42570	1150
		2	34644	936
		3	41314	1116
Wisconsin	Edgewater	4	24099	651
	Genoa	1	22103	597
	Nelson Dewey	1	5852	158
		2	6504	176
	North Oak Creek	1	5083	137
		2	5005	135
		3	5229	141
		4	6154	166
	Pulliam	8	7312	198
	South Oak Creek	5	9416	254
		6	11723	317
		7	15754	426
		8	15375	415

(b) *Phase II allowances.* (1) The Administrator will allocate allowances to the compliance account for each source that includes a unit listed in table 2 of this section in the amount specified in table 2 column C to be held for the years 2000 through 2009.

(2) The Administrator will allocate allowances to the compliance account for each source that includes a unit listed in table 2 of this section in the amount specified in table 2 column F to be held for the years 2010 and each year thereafter.

Table 2 - Phase II Allowance Allocations

			Allowances for Years 2000-2009				Years 2010 and Beyond	
State	Plant Name	Boiler1	(A) Auction Reserve Deduction	(B) Repower-ing Deduction	(C)2 Total Annual Phase II	(D) 1993-1998 Auction Deduction	(E) Auction Reserve Deduction	(F)3 Total Annual Phase II
AL	Barry	1	113	1	3881	112	112	3890
AL	Barry	2	124	1	4291	124	124	4299
AL	Barry	3	256	3	8808	255	255	8827
AL	Barry	4	292	3	10048	291	291	10069
AL	Barry	5	721	9	24827	718	720	24878
AL	Charles R Lowman	1	34	0	1853	34	34	1184
AL	Charles R Lowman	2	204	2	7024	203	203	7038
AL	Charles R Lowman	3	171	2	5893	171	171	5906
AL	Chickasaw	110	3	0	111	3	3	111
AL	Colbert	1	165	2	5852	165	165	5863
AL	Colbert	2	186	2	6600	186	186	6613
AL	Colbert	3	188	2	6639	187	187	6653
AL	Colbert	4	188	2	6644	187	187	6659
AL	Colbert	5	453	5	16028	452	452	16060
AL	E C Gaston	1	220	2	7803	220	220	7818
AL	E C Gaston	2	226	2	7994	225	226	8009
AL	E C Gaston	3	223	2	7894	222	223	7910
AL	E C Gaston	4	235	3	8310	234	234	8328
AL	E C Gaston	5	730	9	25796	728	729	25848
AL	Gadsden	1	57	1	1956	57	57	1961
AL	Gadsden	2	59	1	2023	59	59	2027
AL	Gorgas	10	651	8	22435	649	650	22483
AL	Gorgas	5	36	0	1756	36	36	1251
AL	Gorgas	6	65	1	3035	64	65	2232
AL	Gorgas	7	72	1	3138	72	72	2500
AL	Gorgas	8	136	1	4758	136	136	4707
AL	Gorgas	9	135	1	4746	134	134	4653
AL	Greene County	1	246	3	8485	246	246	8502
AL	Greene County	2	230	2	7921	229	229	7938
AL	James H Miller Jr	1	351	4	14213	350	350	12122
AL	James H Miller Jr	2	515	7	17762	514	514	17800
AL	James H Miller Jr	3	505	5	17417	504	504	17453
AL	James H Miller Jr	4	233	3	8046	233	233	8063
AL	McIntosh-CAES	**1	27	0	938	27	27	939
AL	McWilliams	**4	0	0	0	0	0	0
AL	Widows Creek	1	70	1	3339	70	70	2417
AL	Widows Creek	2	61	1	3211	61	61	2118
AL	Widows Creek	3	71	1	3355	71	71	2457
AL	Widows Creek	4	78	1	3453	78	78	2686
AL	Widows Creek	5	85	1	3564	85	85	2946
AL	Widows Creek	6	66	1	3278	66	66	2280
AL	Widows Creek	7	161	2	7803	161	161	5573
AL	Widows Creek	8	153	2	7458	153	153	5290
AZ	Agua Fria	1	0	0	54	0	1	34
AZ	Agua Fria	2	0	0	65	0	1	39

Table 2 - Phase II Allowance Allocations

State	Plant Name	Boiler1	Allowances for Years 2000-2009				Years 2010 and Beyond	
			(A) Auction Reserve Deduction	(B) Repower-ing Deduction	(C)2 Total Annual Phase II	(D) 1993-1998 Auction Deduction	(E) Auction Reserve Deduction	(F)3 Total Annual Phase II
AZ	Agua Fria	3	0	0	77	0	2	67
AZ	Apache Station	1	10	0	331	10	10	332
AZ	Apache Station	2	41	0	1609	41	41	1420
AZ	Apache Station	3	82	1	3010	82	82	2836
AZ	Cholla	**5	0	0	0	0	0	0
AZ	Cholla	1	59	1	2222	59	59	2034
AZ	Cholla	2	147	2	5441	146	146	5067
AZ	Cholla	3	141	2	5145	140	140	4858
AZ	Cholla	4	225	2	8332	225	225	7784
AZ	Coronado	U1B	151	2	5731	150	150	5199
AZ	Coronado	U2B	158	2	5901	158	158	5465
AZ	De Moss Petrie	4	0	0	0	0	0	0
AZ	Gila Bend	**GT1	0	0	0	0	0	0
AZ	Gila Bend	**GT2	0	0	0	0	0	0
AZ	Gila Bend	**GT3	0	0	0	0	0	0
AZ	Gila Bend	**GT4	0	0	0	0	0	0
AZ	Irvington	1	0	0	16	0	0	14
AZ	Irvington	2	0	0	28	0	1	40
AZ	Irvington	3	0	0	0	0	0	2
AZ	Irvington	4	81	1	2853	81	81	2805
AZ	Kyrene	K-1	0	0	7	0	0	7
AZ	Kyrene	K-2	0	0	18	0	0	16
AZ	Navajo	1	723	9	26211	721	722	24949
AZ	Navajo	2	676	8	24254	674	676	23354
AZ	Navajo	3	686	8	25034	684	686	23693
AZ	Ocotillo	1	0	0	56	0	1	40
AZ	Ocotillo	2	3	0	132	3	4	129
AZ	Saguaro	1	5	0	204	5	5	189
AZ	Saguaro	2	0	0	25	0	1	22
AZ	Springerville	1	177	2	6564	176	176	6099
AZ	Springerville	2	167	2	5754	166	167	5765
AZ	Springerville	3	0	0	0	0	0	0
AZ	West Phoenix	4	0	0	11	0	0	9
AZ	West Phoenix	6	0	0	22	0	0	15
AZ	Yuma Axis	1	0	0	42	0	1	40
AR	Carl Bailey	01	0	0	10	0	0	8
AR	Cecil Lynch	1	0	0	0	0	0	0
AR	Cecil Lynch	2	0	0	0	0	0	0
AR	Cecil Lynch	3	0	0	3	0	0	0
AR	Flint Creek	1	421	5	15187	420	421	14556
AR	Hamilton Moses	1	0	0	0	0	0	0
AR	Hamilton Moses	2	0	0	0	0	0	0
AR	Harvey Couch	1	0	0	7	0	0	3
AR	Harvey Couch	2	0	0	112	0	3	113
AR	Independence	1	496	5	18150	494	495	17123

Table 2 - Phase II Allowance Allocations								
			Allowances for Years 2000-2009				Years 2010 and Beyond	
State	Plant Name	Boiler1	(A) Auction Reserve Deduction	(B) Repower-ing Deduction	(C)2 Total Annual Phase II	(D) 1993-1998 Auction Deduction	(E) Auction Reserve Deduction	(F)3 Total Annual Phase II
AR	Independence	2	496	5	18396	495	495	17142
AR	Lake Catherine	1	0	0	0	0	0	0
AR	Lake Catherine	2	0	0	0	0	0	0
AR	Lake Catherine	3	0	0	8	0	0	6
AR	Lake Catherine	4	3	0	156	3	10	337
AR	McClellan	01	0	0	15	0	0	13
AR	Robert E Ritchie	1	0	0	53	0	2	67
AR	Robert E Ritchie	2	62	1	2147	62	62	2138
AR	Thomas Fitzhugh	1	0	0	1	0	0	1
AR	White Bluff	1	582	7	20933	581	581	20116
AR	White Bluff	2	668	8	23892	666	667	23059
CA	Alamitos	1	78	1	2774	78	78	2703
CA	Alamitos	2	0	0	105	0	0	17
CA	Alamitos	3	0	0	290	0	2	81
CA	Alamitos	4	16	0	819	16	16	541
CA	Alamitos	5	112	1	4226	112	112	3866
CA	Alamitos	6	27	0	1484	27	27	936
CA	Avon	1	0	0	17	0	0	14
CA	Avon	2	0	0	0	0	0	14
CA	Avon	3	0	0	0	0	0	14
CA	Broadway	B1	4	0	127	4	4	124
CA	Broadway	B2	4	0	164	4	4	155
CA	Broadway	B3	0	0	74	0	2	71
CA	Contra Costa	1	0	0	125	1	0	16
CA	Contra Costa	10	115	1	4285	115	115	3978
CA	Contra Costa	2	0	0	2	0	0	23
CA	Contra Costa	3	0	0	0	0	0	20
CA	Contra Costa	4	0	0	0	0	0	15
CA	Contra Costa	5	0	0	0	0	0	16
CA	Contra Costa	6	0	0	0	0	0	13
CA	Contra Costa	7	0	0	28	0	1	28
CA	Contra Costa	8	0	0	53	0	1	40
CA	Contra Costa	9	1	0	356	0	9	303
CA	Cool Water	1	0	0	10	0	0	11
CA	Cool Water	2	0	0	6	0	0	8
CA	El Centro	3	17	0	614	17	17	579
CA	El Centro	4	16	0	586	16	16	560
CA	El Segundo	1	10	0	440	10	10	357
CA	El Segundo	2	0	0	90	0	2	62
CA	El Segundo	3	1	0	182	1	5	171
CA	El Segundo	4	2	0	370	2	10	363
CA	Encina	1	13	0	491	13	13	446
CA	Encina	2	30	0	1131	30	30	1042
CA	Encina	3	20	0	737	20	20	680
CA	Encina	4	53	1	1945	52	52	1816

Table 2 - Phase II Allowance Allocations

State	Plant Name	Boiler1	Allowances for Years 2000-2009				Years 2010 and Beyond	
			(A) Auction Reserve Deduction	(B) Repower-ing Deduction	(C)2 Total Annual Phase II	(D) 1993-1998 Auction Deduction	(E) Auction Reserve Deduction	(F)3 Total Annual Phase II
CA	Encina	5	69	1	2494	69	69	2399
CA	Etiwanda	1	3	0	117	3	3	94
CA	Etiwanda	2	0	0	29	0	1	17
CA	Etiwanda	3	34	0	1372	34	34	1169
CA	Etiwanda	4	1	0	261	1	8	271
CA	Glenarm	16	0	0	0	1	0	0
CA	Glenarm	17	0	0	0	2	0	0
CA	Grayson	4	3	0	102	2	3	87
CA	Grayson	5	1	0	36	3	1	42
CA	Harbor Gen Station	**10A	20	0	699	20	20	700
CA	Harbor Gen Station	**10B	20	0	699	20	20	700
CA	Harbor Gen Station	1	2	0	68	0	2	61
CA	Harbor Gen Station	2	3	0	121	0	3	107
CA	Harbor Gen Station	3	3	0	94	0	2	86
CA	Harbor Gen Station	4	3	0	104	0	3	98
CA	Harbor Gen Station	5	4	0	171	0	4	154
CA	Haynes Gen Station	1	17	0	681	17	17	571
CA	Haynes Gen Station	2	9	0	338	9	9	328
CA	Haynes Gen Station	3	33	0	1244	33	33	1131
CA	Haynes Gen Station	4	25	0	1002	25	25	851
CA	Haynes Gen Station	5	35	0	1401	35	35	1205
CA	Haynes Gen Station	6	37	0	1527	37	37	1270
CA	Highgrove	1	0	0	4	0	0	3
CA	Highgrove	2	0	0	1	0	0	0
CA	Highgrove	3	0	0	1	0	0	1
CA	Highgrove	4	0	0	3	0	0	3
CA	Humboldt Bay	1	10	0	358	10	10	341
CA	Humboldt Bay	2	0	0	24	0	1	26
CA	Hunters Point	3	0	0	76	0	1	47
CA	Hunters Point	4	0	0	5	0	1	48
CA	Hunters Point	5	0	0	74	0	1	42
CA	Hunters Point	6	0	0	1	0	1	37
CA	Hunters Point	7	0	0	192	0	5	170
CA	Huntington Beach	1	33	0	1325	33	33	1153
CA	Huntington Beach	2	28	0	1134	28	28	970
CA	Huntington Beach	3	1	0	161	1	2	62
CA	Huntington Beach	4	1	0	176	1	2	76
CA	Kern	1	0	0	3	0	0	2
CA	Kern	2	0	0	0	0	0	3
CA	Kern	3	0	0	13	0	0	3
CA	Kern	4	0	0	0	0	0	3
CA	Magnolia	M4	1	0	37	1	1	33
CA	Mandalay	1	34	0	1379	33	33	1159
CA	Mandalay	2	32	0	1291	31	31	1090
CA	Martinez	1	0	0	1	0	0	1

Table 2 - Phase II Allowance Allocations								
			Allowances for Years 2000-2009				Years 2010 and Beyond	
State	Plant Name	Boiler1	(A) Auction Reserve Deduction	(B) Repower-ing Deduction	(C)2 Total Annual Phase II	(D) 1993-1998 Auction Deduction	(E) Auction Reserve Deduction	(F)3 Total Annual Phase II
CA	Martinez	2	0	0	1	0	0	1
CA	Martinez	3	0	0	1	0	0	1
CA	Morro Bay	1	41	0	1561	41	41	1410
CA	Morro Bay	2	0	0	139	0	3	98
CA	Morro Bay	3	101	1	3821	101	101	3496
CA	Morro Bay	4	83	1	3052	83	83	2884
CA	Moss Landing	1	0	0	122	0	0	17
CA	Moss Landing	2	0	0	0	0	0	15
CA	Moss Landing	3	0	0	0	0	0	19
CA	Moss Landing	4	0	0	0	0	0	21
CA	Moss Landing	5	0	0	0	0	0	21
CA	Moss Landing	6	0	0	0	0	0	14
CA	Moss Landing	6-1	235	3	8921	235	235	8125
CA	Moss Landing	7	0	0	79	0	1	52
CA	Moss Landing	7-1	2	0	976	2	20	694
CA	Moss Landing	8	13	0	466	13	13	435
CA	Oleum	1	4	0	146	4	4	122
CA	Oleum	2	4	0	138	4	4	138
CA	Oleum	3	8	0	244	8	8	242
CA	Oleum	4	2	0	102	2	2	102
CA	Oleum	5	6	0	174	6	6	174
CA	Oleum	6	6	0	204	6	6	204
CA	Olive	01	3	0	133	3	3	121
CA	Olive	02	0	0	25	0	1	47
CA	Ormond Beach	1	110	1	4519	109	109	3785
CA	Ormond Beach	2	118	1	4585	118	118	4092
CA	Pittsburg	1	43	0	1641	43	43	1494
CA	Pittsburg	2	36	0	1350	35	36	1228
CA	Pittsburg	3	42	0	1586	42	42	1443
CA	Pittsburg	4	42	0	1581	42	42	1452
CA	Pittsburg	5	0	0	285	0	8	288
CA	Pittsburg	6	104	1	3753	103	103	3578
CA	Pittsburg	7	1	0	740	1	18	625
CA	Potrero	3-1	0	0	321	0	8	266
CA	Redondo Beach	11	0	0	36	0	0	4
CA	Redondo Beach	12	0	0	0	0	0	2
CA	Redondo Beach	13	0	0	0	1	0	4
CA	Redondo Beach	14	0	0	0	1	0	4
CA	Redondo Beach	15	0	0	0	0	0	3
CA	Redondo Beach	16	0	0	0	0	0	5
CA	Redondo Beach	17	0	0	0	0	0	6
CA	Redondo Beach	5	0	0	80	0	4	126
CA	Redondo Beach	6	0	0	105	0	3	103
CA	Redondo Beach	7	1	0	554	0	14	483
CA	Redondo Beach	8	1	0	597	0	14	496

Table 2 - Phase II Allowance Allocations

State	Plant Name	Boiler1	Allowances for Years 2000-2009				Years 2010 and Beyond	
			(A) Auction Reserve Deduction	(B) Repower-ing Deduction	(C)2 Total Annual Phase II	(D) 1993-1998 Auction Deduction	(E) Auction Reserve Deduction	(F)3 Total Annual Phase II
CA	San Bernardino	1	3	0	118	3	3	105
CA	San Bernardino	2	0	0	17	0	1	19
CA	Scattergood Gen Sta	1	19	0	752	19	19	641
CA	Scattergood Gen Sta	2	17	0	658	17	17	571
CA	Scattergood Gen Sta	3	0	0	262	0	7	250
CA	Silver Gate	1	0	0	0	0	0	0
CA	Silver Gate	2	0	0	0	0	0	0
CA	Silver Gate	3	0	0	0	0	0	0
CA	Silver Gate	4	0	0	0	0	0	0
CA	Silver Gate	5	0	0	0	0	0	0
CA	Silver Gate	6	0	0	0	0	0	0
CA	South Bay	1	67	1	2491	66	67	2303
CA	South Bay	2	49	1	1774	49	49	1683
CA	South Bay	3	59	1	2176	58	59	2024
CA	South Bay	4	16	0	603	16	16	554
CA	Valley Gen Station	1	3	0	122	3	3	101
CA	Valley Gen Station	2	3	0	141	3	3	120
CA	Valley Gen Station	3	11	0	389	11	11	389
CA	Valley Gen Station	4	9	0	351	9	9	295
CO	Arapahoe	1	6	0	221	6	6	208
CO	Arapahoe	2	7	0	247	7	7	229
CO	Arapahoe	3	5	0	181	5	5	172
CO	Arapahoe	4	53	1	1926	53	53	1829
CO	Cameo	2	25	0	904	25	25	852
CO	Cherokee	1	59	1	2137	59	59	2035
CO	Cherokee	2	79	1	2837	79	79	2722
CO	Cherokee	3	103	1	3760	103	103	3562
CO	Cherokee	4	206	2	7533	206	206	7132
CO	Comanche	1	213	2	7696	213	213	7363
CO	Comanche	2	187	2	6912	186	186	6450
CO	Craig	C1	222	2	8216	222	222	7678
CO	Craig	C2	213	2	7843	212	213	7352
CO	Craig	C3	62	1	2601	62	62	2149
CO	Hayden	H1	167	2	6061	167	167	5776
CO	Hayden	H2	255	3	9227	254	255	8810
CO	Martin Drake	5	32	0	1149	31	31	1089
CO	Martin Drake	6	55	1	2029	55	55	1911
CO	Martin Drake	7	88	1	3218	88	88	3043
CO	Nucla	1	33	0	1122	33	33	1124
CO	Pawnee	**2	0	0	0	0	0	0
CO	Pawnee	1	398	4	14439	397	398	13761
CO	Rawhide	101	39	0	1800	39	39	1352
CO	Ray D Nixon	**NA1	0	0	0	0	0	0
CO	Ray D Nixon	1	122	1	4476	122	122	4217
CO	Valmont	14	0	0	4	0	0	0

Table 2 - Phase II Allowance Allocations

State	Plant Name	Boiler1	Allowances for Years 2000-2009				Years 2010 and Beyond	
			(A) Auction Reserve Deduction	(B) Repower-ing Deduction	(C)2 Total Annual Phase II	(D) 1993-1998 Auction Deduction	(E) Auction Reserve Deduction	(F)3 Total Annual Phase II
CO	Valmont	21	0	0	20	0	0	20
CO	Valmont	24	0	0	0	0	0	0
CO	Valmont	5	86	1	3136	86	86	2983
CO	Zuni	1	10	0	340	10	10	341
CO	Zuni	2	0	0	0	0	0	6
CO	Zuni	3	0	0	5	0	0	9
CT	Bridgeport Harbor	BHB1	60	1	2078	60	60	2082
CT	Bridgeport Harbor	BHB2	137	1	4726	137	137	4735
CT	Bridgeport Harbor	BHB3	333	4	11477	332	332	11501
CT	Devon	3	28	0	980	28	28	981
CT	Devon	4A	5	0	170	5	5	171
CT	Devon	4B	5	0	171	5	5	172
CT	Devon	5A	4	0	155	4	4	156
CT	Devon	5B	4	0	155	4	4	156
CT	Devon	6	26	0	898	26	26	899
CT	Devon	7	81	1	2807	81	81	2813
CT	Devon	8	87	1	3002	87	87	3008
CT	English	EB13	3	0	114	3	3	113
CT	English	EB14	5	0	157	5	5	157
CT	Middletown	1	13	0	461	13	13	462
CT	Middletown	2	39	0	1328	38	38	1332
CT	Middletown	3	97	1	3338	97	97	3345
CT	Middletown	4	69	1	2389	69	69	2393
CT	Montville	5	35	0	1208	35	35	1210
CT	Montville	6	165	2	5673	164	164	5686
CT	New Haven Harbor	NHB1	379	4	13066	378	378	13092
CT	Norwalk Harbor	1	149	2	5139	149	149	5150
CT	Norwalk Harbor	2	158	2	5456	158	158	5467
DE	Edge Moor	3	103	1	3557	103	103	3564
DE	Edge Moor	4	183	2	6293	182	182	6307
DE	Edge Moor	5	187	2	6461	187	187	6473
DE	Hay Road	**3	5	0	158	5	5	158
DE	Indian River	1	87	1	2997	87	87	3002
DE	Indian River	2	92	1	3181	92	92	3188
DE	Indian River	3	158	2	5439	157	158	5451
DE	Indian River	4	389	4	13410	388	388	13438
DE	McKee Run	3	54	1	2584	53	53	1850
DE	Van Sant	**11	4	0	138	4	4	138
DC	Benning	15	15	0	517	15	15	518
DC	Benning	16	25	0	856	25	25	857
FL	Anclote (4)	1	298	3	13022	297	298	10297
FL	Anclote (4)	2	315	3	12950	314	315	10894
FL	Arvah B Hopkins	1	1	0	81	1	2	85
FL	Arvah B Hopkins	2	160	2	5522	160	160	5532
FL	Avon Park	2	14	0	495	14	14	495

Table 2 - Phase II Allowance Allocations

State	Plant Name	Boiler1	Allowances for Years 2000-2009				Years 2010 and Beyond	
			(A) Auction Reserve Deduction	(B) Repower-ing Deduction	(C)2 Total Annual Phase II	(D) 1993-1998 Auction Deduction	(E) Auction Reserve Deduction	(F)3 Total Annual Phase II
FL	Big Bend	BB01	352	4	12132	351	351	12156
FL	Big Bend	BB02	354	4	12196	353	353	12221
FL	Big Bend	BB03	332	4	11444	331	331	11468
FL	Big Bend	BB04	255	3	8780	254	254	8799
FL	C D McIntosh Jr	1	26	0	907	26	26	908
FL	C D McIntosh Jr	2	30	0	1029	30	30	1031
FL	C D McIntosh Jr	3	288	3	9928	287	288	9948
FL	Cape Canaveral	PCC1	123	1	4224	122	122	4232
FL	Cape Canaveral	PCC2	144	2	4961	143	144	4969
FL	Combined Cycle 1	32432	2	0	60	2	2	60
FL	Crist	1	1	0	35	1	1	35
FL	Crist	2	0	0	3	0	0	3
FL	Crist	3	0	0	4	0	0	4
FL	Crist	4	72	1	2467	71	71	2473
FL	Crist	5	70	1	2430	70	70	2435
FL	Crist	6	244	3	8396	243	243	8413
FL	Crist	7	363	4	12522	362	363	12545
FL	Crystal River	1	360	4	12425	359	360	12449
FL	Crystal River	2	415	4	14291	413	414	14320
FL	Crystal River	4	686	8	23651	684	686	23697
FL	Crystal River	5	734	9	25248	732	732	25301
FL	CT	**1	0	0	0	0	0	0
FL	CT	**2	0	0	0	0	0	0
FL	CT	**3	0	0	0	0	0	0
FL	CT	**4	0	0	0	0	0	0
FL	Cutler	PCU5	0	0	0	0	0	4
FL	Cutler	PCU6	0	0	0	0	0	9
FL	Debary	**10	20	0	705	20	20	706
FL	Debary	**7	20	0	705	20	20	706
FL	Debary	**8	20	0	705	20	20	706
FL	Debary	**9	20	0	705	20	20	706
FL	Deerhaven	**NA2	0	0	0	0	0	0
FL	Deerhaven	B1	1	0	98	1	3	114
FL	Deerhaven	B2	240	3	8268	239	239	8286
FL	Deerhaven	CT3	0	0	0	0	0	0
FL	F J Gannon	GB01	97	1	3842	97	97	3358
FL	F J Gannon	GB02	120	1	4425	120	120	4148
FL	F J Gannon	GB03	164	2	5664	164	164	5675
FL	F J Gannon	GB04	179	2	6223	179	179	6185
FL	F J Gannon	GB05	190	2	6537	189	189	6551
FL	F J Gannon	GB06	292	3	10081	292	292	10101
FL	Fort Myers	PFM1	93	1	3188	92	92	3194
FL	Fort Myers	PFM2	274	3	9457	273	274	9475
FL	G E Turner	2	2	0	543	2	2	82
FL	G E Turner	3	21	0	718	21	21	720

Table 2 - Phase II Allowance Allocations								
			Allowances for Years 2000-2009				Years 2010 and Beyond	
State	Plant Name	Boiler1	(A) Auction Reserve Deduction	(B) Repower-ing Deduction	(C)2 Total Annual Phase II	(D) 1993-1998 Auction Deduction	(E) Auction Reserve Deduction	(F)3 Total Annual Phase II
FL	G E Turner	4	18	0	611	18	18	611
FL	Henry D King	7	2	0	63	2	2	65
FL	Henry D King	8	0	0	26	0	1	34
FL	Higgins	1	12	0	423	12	12	423
FL	Higgins	2	14	0	475	14	14	475
FL	Higgins	3	13	0	969	13	13	434
FL	Hookers Point	HB01	4	0	177	4	4	177
FL	Hookers Point	HB02	5	0	207	5	5	205
FL	Hookers Point	HB03	13	0	469	13	13	468
FL	Hookers Point	HB04	20	0	701	20	20	702
FL	Hookers Point	HB05	36	0	1253	36	36	1252
FL	Hookers Point	HB06	14	0	478	14	14	478
FL	Indian River	**C	0	0	0	0	0	0
FL	Indian River	**D	19	0	639	18	18	640
FL	Indian River	1	35	0	1192	34	34	1194
FL	Indian River	2	46	0	1569	45	45	1572
FL	Indian River	3	106	1	3646	105	106	3652
FL	Intercession City	**10	20	0	705	20	20	706
FL	Intercession City	**7	20	0	705	20	20	706
FL	Intercession City	**8	20	0	705	20	20	706
FL	Intercession City	**9	20	0	705	20	20	706
FL	J D Kennedy	10	57	1	1975	57	57	1980
FL	J D Kennedy	8	6	0	196	6	6	196
FL	J D Kennedy	9	16	0	553	16	16	553
FL	J R Kelly	JRK8	1	0	58	1	2	67
FL	Lansing Smith	1	188	2	6476	187	188	6489
FL	Lansing Smith	2	221	2	7601	220	220	7616
FL	Larsen Memorial	**8	19	0	665	19	19	666
FL	Larsen Memorial	**9	0	0	0	0	0	0
FL	Larsen Memorial	7	9	0	307	9	9	308
FL	Lauderdale	4GT1	28	0	948	27	27	950
FL	Lauderdale	4GT2	28	0	948	27	27	950
FL	Lauderdale	5GT1	28	0	948	27	27	950
FL	Lauderdale	5GT2	28	0	948	27	27	950
FL	Manatee	PMT1	400	4	13773	398	399	13799
FL	Manatee	PMT2	368	4	12697	367	368	12716
FL	Martin	HRSG3A	37	0	1275	37	37	1277
FL	Martin	HRSG3B	37	0	1275	37	37	1277
FL	Martin	HRSG4A	37	0	1275	37	37	1277
FL	Martin	HRSG4B	37	0	1275	37	37	1277
FL	Martin	PMR1	148	2	5092	147	147	5102
FL	Martin	PMR2	175	2	6039	175	175	6049
FL	NA 1 -- 7238	**1	0	0	0	0	0	0
FL	Northside	1	142	2	6222	141	142	4897
FL	Northside	2	30	0	6268	30	30	1048

Table 2 - Phase II Allowance Allocations

State	Plant Name	Boiler1	Allowances for Years 2000-2009				Years 2010 and Beyond	
			(A) Auction Reserve Deduction	(B) Repower-ing Deduction	(C)2 Total Annual Phase II	(D) 1993-1998 Auction Deduction	(E) Auction Reserve Deduction	(F)3 Total Annual Phase II
FL	Northside	3	193	2	11124	192	192	6658
FL	P L Bartow	1	71	1	2805	71	71	2455
FL	P L Bartow	2	70	1	2961	70	70	2431
FL	P L Bartow	3	157	2	5428	157	157	5439
FL	Port Everglades	PPE1	68	1	2339	68	68	2343
FL	Port Everglades	PPE2	70	1	2413	70	70	2417
FL	Port Everglades	PPE3	171	2	5880	170	170	5891
FL	Port Everglades	PPE4	173	2	5962	172	173	5973
FL	Putnam	HRSG1	48	1	1643	48	48	1647
FL	Putnam	HRSG1	48	1	1643	48	48	1647
FL	Putnam	HRSG2	45	0	1568	45	45	1570
FL	Putnam	HRSG2	45	0	1568	45	45	1570
FL	Riviera	PRV2	3	0	94	3	3	94
FL	Riviera	PRV3	104	1	3573	103	103	3580
FL	Riviera	PRV4	103	1	3545	102	103	3551
FL	S O Purdom	7	13	0	443	13	13	444
FL	Sanford	PSN3	31	0	1085	31	31	1087
FL	Sanford	PSN4	96	1	8614	96	96	3323
FL	Sanford	PSN5	93	1	3221	93	93	3220
FL	Scholz	1	57	1	1958	57	57	1963
FL	Scholz	2	59	1	2050	59	59	2054
FL	Seminole	1	533	7	18381	532	532	18420
FL	Seminole	2	533	7	18381	532	532	18420
FL	Southside	1	27	0	930	27	27	932
FL	Southside	2	28	0	963	28	28	964
FL	Southside	3	7	0	227	7	7	227
FL	Southside	4	18	0	616	18	18	617
FL	Southside	5	53	1	1810	52	52	1815
FL	St Johns River Pwr	1	336	4	11582	335	335	11605
FL	St Johns River Pwr	2	330	4	11370	329	329	11395
FL	Stanton Energy	1	328	4	11290	327	327	11314
FL	Stanton Energy	2	0	0	0	0	0	0
FL	Stock Island	1	75	1	2571	74	74	2578
FL	Stock Island D1	**NA1	3	0	100	3	3	100
FL	Stock Island D2	**NA2	3	0	100	3	3	100
FL	Suwannee River	1	7	0	254	7	7	255
FL	Suwannee River	2	7	0	253	7	7	253
FL	Suwannee River	3	19	0	649	19	19	649
FL	Tom G Smith	S-3	0	0	9	0	0	11
FL	Tom G Smith	S-4	2	0	80	2	2	80
FL	Turkey Point	PTP1	170	2	5868	170	170	5879
FL	Turkey Point	PTP2	172	2	5911	171	171	5924
FL	Vero Beach Munic	**5	9	0	317	9	9	318
FL	Vero Beach Munic	3	9	0	315	9	9	316
FL	Vero Beach Munic	4	2	0	107	2	3	116

Table 2 - Phase II Allowance Allocations

State	Plant Name	Boiler1	Allowances for Years 2000-2009				Years 2010 and Beyond	
			(A) Auction Reserve Deduction	(B) Repower-ing Deduction	(C)2 Total Annual Phase II	(D) 1993-1998 Auction Deduction	(E) Auction Reserve Deduction	(F)3 Total Annual Phase II
GA	Arkwright	1	37	0	1449	37	37	1291
GA	Arkwright	2	39	0	1470	39	39	1354
GA	Arkwright	3	45	0	1539	45	45	1542
GA	Arkwright	4	36	0	1255	36	36	1257
GA	Atkinson	A1A	0	0	2	0	0	2
GA	Atkinson	A1B	0	0	2	0	0	2
GA	Atkinson	A2	0	0	4	0	0	4
GA	Atkinson	A3	0	0	6	0	0	5
GA	Atkinson	A4	0	0	5	0	0	5
GA	Bowen	1BLR	667	8	23609	665	667	23656
GA	Bowen	2BLR	686	8	24280	684	686	24329
GA	Bowen	3BLR	875	10	30932	873	874	30994
GA	Bowen	4BLR	875	10	30924	873	873	30987
GA	Hammond	1	107	1	3785	107	107	3793
GA	Hammond	2	112	1	3974	112	112	3981
GA	Hammond	3	109	1	3841	108	108	3850
GA	Hammond	4	459	5	16227	457	458	16260
GA	Harllee Branch	1	286	3	9856	285	285	9876
GA	Harllee Branch	2	338	4	11657	337	338	11681
GA	Harllee Branch	3	465	5	16039	464	464	16072
GA	Harllee Branch	4	462	5	15916	461	461	15949
GA	Jack McDonough	MB1	243	3	8581	242	242	8599
GA	Jack McDonough	MB2	251	3	8882	250	251	8900
GA	Kraft	1	44	0	1530	44	44	1533
GA	Kraft	2	42	0	1510	42	42	1466
GA	Kraft	3	86	1	2963	86	86	2968
GA	Kraft	4	13	0	436	13	13	437
GA	McIntosh	1	161	2	5554	161	161	5565
GA	McManus	1	3	0	844	3	3	89
GA	McManus	2	6	0	1279	6	6	198
GA	Mitchell	3	158	2	5461	158	158	5472
GA	Riverside	12	0	0	5	0	0	5
GA	Scherer	1	611	8	21075	610	610	21121
GA	Scherer	2	616	8	21224	614	615	21270
GA	Scherer	3	617	8	21258	615	616	21304
GA	Scherer	4	616	8	21234	614	615	21280
GA	Wansley	1	863	10	30507	861	862	30567
GA	Wansley	2	798	10	28201	796	797	28259
GA	Yates	Y1BR	88	1	3106	88	88	3113
GA	Yates	Y2BR	86	1	3035	86	86	3041
GA	Yates	Y3BR	85	1	2997	84	85	3003
GA	Yates	Y4BR	109	1	3842	108	108	3851
GA	Yates	Y5BR	115	1	4055	114	114	4063
GA	Yates	Y6BR	302	3	10675	301	301	10696
GA	Yates	Y7BR	297	3	10499	296	296	10521

Table 2 - Phase II Allowance Allocations

State	Plant Name	Boiler1	Allowances for Years 2000-2009				Years 2010 and Beyond	
			(A) Auction Reserve Deduction	(B) Repower-ing Deduction	(C)2 Total Annual Phase II	(D) 1993-1998 Auction Deduction	(E) Auction Reserve Deduction	(F)3 Total Annual Phase II
IL	Baldwin	1	512	7	18109	510	511	18146
IL	Baldwin	2	541	7	19147	540	540	19186
IL	Baldwin	3	518	7	18343	517	518	18380
IL	Coffeen	01	144	2	5083	143	143	5094
IL	Coffeen	02	434	5	15376	433	434	15406
IL	Collins	1	38	0	1327	38	38	1329
IL	Collins	2	33	0	1133	33	33	1135
IL	Collins	3	58	1	2000	58	58	2004
IL	Collins	4	47	1	1632	47	47	1636
IL	Collins	5	52	1	1809	52	52	1812
IL	Crawford	7	105	1	7235	104	105	3617
IL	Crawford	8	162	2	9848	162	162	5602
IL	Dallman	31	40	0	1385	40	40	1388
IL	Dallman	32	45	0	1568	45	45	1570
IL	Dallman	33	151	2	5197	150	151	5208
IL	Duck Creek	1	325	4	11197	324	324	11220
IL	E D Edwards	1	70	1	2898	70	70	2414
IL	E D Edwards	2	196	2	6914	195	195	6760
IL	E D Edwards	3	251	3	9122	250	250	8663
IL	Fisk	19	104	1	10031	104	104	3602
IL	Grand Tower	07	7	0	248	7	7	248
IL	Grand Tower	08	7	0	235	7	7	236
IL	Grand Tower	09	72	1	2546	72	72	2551
IL	Havana	1	0	0	35	0	0	35
IL	Havana	2	0	0	45	0	0	45
IL	Havana	3	0	0	35	0	0	35
IL	Havana	4	0	0	35	0	0	35
IL	Havana	5	0	0	35	0	0	35
IL	Havana	6	0	0	35	0	0	35
IL	Havana	7	0	0	35	0	0	35
IL	Havana	8	0	0	35	0	0	35
IL	Havana	9	195	2	8803	194	195	6731
IL	Hennepin	1	59	1	2017	58	58	2023
IL	Hennepin	2	224	2	7938	224	224	7953
IL	Hutsonville	05	64	1	2222	64	64	2227
IL	Hutsonville	06	67	1	2301	67	67	2306
IL	Joliet 29	71	169	2	7578	169	169	5837
IL	Joliet 29	72	138	1	6176	137	138	4757
IL	Joliet 29	81	158	2	7294	158	158	5471
IL	Joliet 29	82	164	2	7556	164	164	5668
IL	Joliet 9	5	170	2	8674	170	170	5886
IL	Joppa Steam	1	153	2	5286	153	153	5297
IL	Joppa Steam	2	131	1	4522	131	131	4530
IL	Joppa Steam	3	149	2	5151	149	149	5162
IL	Joppa Steam	4	138	2	4771	138	138	4781

Table 2 - Phase II Allowance Allocations								
			Allowances for Years 2000-2009				Years 2010 and Beyond	
State	Plant Name	Boiler1	(A) Auction Reserve Deduction	(B) Repower-ing Deduction	(C)2 Total Annual Phase II	(D) 1993-1998 Auction Deduction	(E) Auction Reserve Deduction	(F)3 Total Annual Phase II
IL	Joppa Steam	5	139	2	4793	139	139	4803
IL	Joppa Steam	6	129	1	4459	129	129	4467
IL	Kincaid	1	384	4	13592	383	383	13620
IL	Kincaid	2	423	5	14977	422	423	15006
IL	Lakeside	7	74	1	2553	74	18	633
IL	Lakeside	8	42	0	1446	42	9	326
IL	Marion	1	60	1	2079	60	14	468
IL	Marion	2	62	1	2129	62	14	479
IL	Marion	3	67	1	2309	67	15	520
IL	Marion	4	198	2	6839	198	198	6853
IL	Meredosia	01	9	0	298	9	9	299
IL	Meredosia	02	9	0	322	9	9	322
IL	Meredosia	03	8	0	280	8	8	281
IL	Meredosia	04	7	0	255	7	7	255
IL	Meredosia	05	169	2	5989	169	169	6000
IL	Meredosia	06	1	0	46	1	1	46
IL	Newton	1	453	5	15620	452	452	15652
IL	Newton	2	404	4	13928	403	403	13956
IL	Powerton	51	244	3	10701	244	244	8443
IL	Powerton	52	241	3	10571	241	241	8341
IL	Powerton	61	248	3	10513	248	248	8580
IL	Powerton	62	250	3	10596	250	250	8647
IL	R S Wallace	10	5	0	2432	5	5	177
IL	R S Wallace	9	2	0	901	2	2	61
IL	Venice	1	0	0	5	0	0	5
IL	Venice	2	0	0	2	0	0	2
IL	Venice	3	0	0	17	0	0	17
IL	Venice	4	0	0	14	0	0	14
IL	Venice	5	0	0	10	0	0	10
IL	Venice	6	0	0	10	0	0	10
IL	Venice	7	0	0	2	0	0	2
IL	Venice	8	0	0	2	0	0	2
IL	Vermillion	1	82	1	2834	82	82	2840
IL	Vermillion	2	108	1	3830	108	108	3837
IL	Waukegan	17	43	0	3104	182	43	1501
IL	Waukegan	7	183	2	8212	145	183	6314
IL	Waukegan	8	145	2	7838	43	145	5005
IL	Will County	1	74	1	5321	74	74	2554
IL	Will County	2	73	1	4849	72	72	2505
IL	Will County	3	150	2	6993	150	150	5197
IL	Will County	4	264	3	13801	264	264	9133
IL	Wood River	1	0	0	3	0	0	3
IL	Wood River	2	0	0	3	0	0	3
IL	Wood River	3	0	0	3	0	0	3
IL	Wood River	4	51	1	2258	51	51	1761

Table 2 - Phase II Allowance Allocations

State	Plant Name	Boiler1	Allowances for Years 2000-2009				Years 2010 and Beyond	
			(A) Auction Reserve Deduction	(B) Repower-ing Deduction	(C)2 Total Annual Phase II	(D) 1993-1998 Auction Deduction	(E) Auction Reserve Deduction	(F)3 Total Annual Phase II
IL	Wood River	5	275	3	9478	274	274	9498
IN	A B Brown	**4	19	0	639	18	18	640
IN	A B Brown	1	155	2	5356	155	155	5368
IN	A B Brown	2	131	1	4529	131	131	4538
IN	Bailly	7	136	1	4811	136	136	4819
IN	Bailly	8	194	2	6869	194	194	6882
IN	Breed	1	225	2	7975	225	225	7990
IN	Cayuga	1	407	4	14386	405	406	14415
IN	Cayuga	2	416	5	14710	415	415	14740
IN	Cayuga	4	0	0	0	0	0	0
IN	Cayuga	5	0	0	0	0	0	0
IN	Cayuga	6	0	0	0	0	0	0
IN	Clifty Creek	1	246	3	8462	245	245	8480
IN	Clifty Creek	2	241	3	8321	241	241	8338
IN	Clifty Creek	3	249	3	8570	248	248	8589
IN	Clifty Creek	4	245	3	8431	244	244	8449
IN	Clifty Creek	5	236	3	8129	235	235	8146
IN	Clifty Creek	6	248	3	8557	248	248	8574
IN	Dean H Mitchell	11	35	0	2658	35	35	1225
IN	Dean H Mitchell	4	43	0	3116	43	43	1473
IN	Dean H Mitchell	5	54	1	3017	54	54	1860
IN	Dean H Mitchell	6	48	1	2969	48	48	1672
IN	Edwardsport	6-1	0	0	0	0	0	0
IN	Edwardsport	7-1	10	0	347	10	10	348
IN	Edwardsport	7-2	10	0	354	10	10	355
IN	Edwardsport	8-1	11	0	375	11	11	375
IN	Elmer W Stout	1	0	0	0	0	0	0
IN	Elmer W Stout	2	0	0	0	0	0	0
IN	Elmer W Stout	3	0	0	0	0	0	0
IN	Elmer W Stout	4	0	0	0	0	0	0
IN	Elmer W Stout	5	0	0	0	0	0	0
IN	Elmer W Stout	6	0	0	0	0	0	0
IN	Elmer W Stout	7	0	0	0	0	0	0
IN	Elmer W Stout	8	0	0	0	0	0	0
IN	Elmer W Stout	9	0	0	1	0	0	1
IN	Elmer W Stout	10	0	0	2	0	0	2
IN	Elmer W Stout	50	47	1	1673	47	47	1677
IN	Elmer W Stout	60	58	1	2057	58	58	2061
IN	Elmer W Stout	70	288	3	10177	287	287	10198
IN	F B Culley	1	24	0	827	24	24	828
IN	F B Culley	2	50	1	1758	50	50	1762
IN	F B Culley	3	207	2	7316	206	206	7332
IN	Frank E Ratts	1SG1	102	1	3592	101	101	3600
IN	Frank E Ratts	2SG1	103	1	3659	103	103	3666
IN	Gibson	1	492	5	17415	491	491	17449

Table 2 - Phase II Allowance Allocations								
			Allowances for Years 2000-2009				Years 2010 and Beyond	
State	Plant Name	Boiler1	(A) Auction Reserve Deduction	(B) Repower-ing Deduction	(C)2 Total Annual Phase II	(D) 1993-1998 Auction Deduction	(E) Auction Reserve Deduction	(F)3 Total Annual Phase II
IN	Gibson	2	500	5	17678	498	499	17713
IN	Gibson	3	500	5	17709	499	500	17743
IN	Gibson	4	491	5	17384	490	490	17419
IN	Gibson	5	527	7	18180	526	527	18217
IN	H T Pritchard	1	0	0	0	0	0	0
IN	H T Pritchard	2	0	0	1	0	0	1
IN	H T Pritchard	3	7	0	240	7	7	240
IN	H T Pritchard	4	15	0	533	15	15	534
IN	H T Pritchard	5	17	0	596	17	17	597
IN	H T Pritchard	6	70	1	2487	70	70	2492
IN	Merom	1SG1	433	5	14920	432	432	14951
IN	Merom	2SG1	430	5	14818	429	429	14850
IN	Michigan City	12	284	3	10049	283	283	10069
IN	Michigan City	4	26	0	909	26	26	912
IN	Michigan City	5	29	0	1010	29	29	1012
IN	Michigan City	6	30	0	1019	30	30	1021
IN	NA 1 – 7221	**1	0	0	0	0	0	0
IN	NA 1 – 7221	**3	0	0	0	0	0	0
IN	NA 1 – 7221	**4	0	0	0	0	0	0
IN	Noblesville	1	2	0	66	2	2	66
IN	Noblesville	2	2	0	54	2	2	54
IN	Noblesville	3	1	0	40	1	1	40
IN	Petersburg	1	200	2	7086	200	200	7100
IN	Petersburg	2	395	4	13961	393	394	13988
IN	Petersburg	3	490	5	16881	488	489	16916
IN	Petersburg	4	469	5	16150	467	468	16183
IN	R Gallagher	1	82	1	2908	82	82	2914
IN	R Gallagher	2	89	1	3137	88	89	3144
IN	R Gallagher	3	80	1	2814	79	79	2821
IN	R Gallagher	4	83	1	2932	83	83	2938
IN	R M Schahfer	14	141	2	10355	141	141	4868
IN	R M Schahfer	15	129	1	10692	129	129	4461
IN	R M Schahfer	17	151	2	5222	151	151	5233
IN	R M Schahfer	18	151	2	5187	150	150	5199
IN	Rockport	MB1	958	11	32992	956	957	33061
IN	Rockport	MB2	958	11	32992	956	957	33061
IN	State Line	3	100	1	4725	100	100	3452
IN	State Line	4	175	2	6922	174	174	6033
IN	Tanners Creek	U1	59	1	2775	59	59	2037
IN	Tanners Creek	U2	62	1	2797	62	62	2138
IN	Tanners Creek	U3	66	1	4079	66	66	2287
IN	Tanners Creek	U4	302	3	10702	302	302	10722
IN	Wabash River	1	49	1	1722	49	49	1726
IN	Wabash River	2	39	0	1392	39	39	1394
IN	Wabash River	3	46	0	1616	46	46	1619

Table 2 - Phase II Allowance Allocations

State	Plant Name	Boiler1	Allowances for Years 2000-2009				Years 2010 and Beyond	
			(A) Auction Reserve Deduction	(B) Repower-ing Deduction	(C)2 Total Annual Phase II	(D) 1993-1998 Auction Deduction	(E) Auction Reserve Deduction	(F)3 Total Annual Phase II
IN	Wabash River	4	44	0	1532	44	44	1534
IN	Wabash River	5	45	0	1582	45	45	1584
IN	Wabash River	6	150	2	5293	149	149	5304
IN	Warrick	4	297	3	10506	296	296	10527
IN	Whitewater Valley	1	65	1	2236	65	65	2241
IN	Whitewater Valley	2	194	2	6693	194	194	6706
IA	Ames	7	12	0	403	12	12	403
IA	Ames	8	53	1	1833	53	53	1837
IA	Burlington	1	130	1	4498	130	130	4507
IA	Council Bluffs	1	19	0	1110	19	19	653
IA	Council Bluffs	2	27	0	1651	27	27	928
IA	Council Bluffs	3	463	5	15951	462	462	15985
IA	Des Moines	**5	0	0	0	0	0	0
IA	Des Moines	10	5	0	163	5	5	164
IA	Des Moines	11	7	0	244	7	7	245
IA	Dubuque	1	32	0	1120	32	32	1122
IA	Dubuque	5	9	0	305	9	9	306
IA	Earl F Wisdom	1	11	0	379	11	11	380
IA	Fair Station	2	162	2	5573	161	161	5585
IA	George Neal North	1	67	1	2309	67	67	2314
IA	George Neal North	2	128	1	9081	127	127	4405
IA	George Neal North	3	248	3	12293	247	247	8556
IA	George Neal South	4	439	5	15139	438	438	15171
IA	Graettinger	2	0	0	10	0	0	10
IA	Grinnell	**2	6	0	189	6	6	190
IA	Lansing	3	14	0	478	14	14	479
IA	Lansing	4	126	1	4628	125	126	4344
IA	Lime Creek	**1	7	0	255	7	7	255
IA	Lime Creek	**2	7	0	255	7	7	255
IA	Louisa	101	452	5	15588	451	451	15620
IA	Maynard Station	1	1	0	31	1	1	31
IA	Milton Knapp	2	168	2	5793	168	168	5805
IA	Muscatine	8	39	0	1362	39	39	1364
IA	Muscatine	9	59	1	2026	59	59	2030
IA	NA 1 – 7230	**2	0	0	0	0	0	0
IA	Ottumwa	1	554	7	19088	552	553	19127
IA	Pella	6	22	0	757	22	22	758
IA	Pella	7	28	0	978	28	28	979
IA	Pella	8	1	0	68	1	1	27
IA	Prairie Creek	3	21	0	725	21	21	727
IA	Prairie Creek	4	100	1	3433	99	99	3440
IA	Riverside	9	51	1	1744	50	51	1748
IA	Sixth Street	1	24	0	814	24	24	815
IA	Sixth Street	2	6	0	177	6	6	177
IA	Sixth Street	3	6	0	154	6	6	154

Table 2 - Phase II Allowance Allocations

State	Plant Name	Boiler1	Allowances for Years 2000-2009				Years 2010 and Beyond	
			(A) Auction Reserve Deduction	(B) Repower-ing Deduction	(C)2 Total Annual Phase II	(D) 1993-1998 Auction Deduction	(E) Auction Reserve Deduction	(F)3 Total Annual Phase II
IA	Sixth Street	4	1	0	77	1	1	77
IA	Sixth Street	5	10	0	308	10	10	308
IA	Streeter Station	7	16	0	554	16	16	555
IA	Sutherland	1	6	0	199	6	6	200
IA	Sutherland	2	11	0	376	11	11	376
IA	Sutherland	3	64	1	2190	63	63	2196
KS	Arthur Mullergren	3	0	0	1	0	0	1
KS	Cimarron River	1	0	0	12	0	0	11
KS	Coffeyville	4	0	0	11	0	0	10
KS	East 12th Street	4	0	0	10	0	0	8
KS	Garden City	S-2	0	0	0	0	0	0
KS	Gordon Evans	1	0	0	64	0	2	56
KS	Gordon Evans	2	0	0	25	0	1	21
KS	Holcomb	SGU1	116	1	4010	116	116	4018
KS	Hutchinson	1	0	0	0	0	0	0
KS	Hutchinson	2	0	0	0	0	0	0
KS	Hutchinson	3	0	0	0	0	0	0
KS	Hutchinson	4	0	0	18	0	0	16
KS	Jeffery Energy Ctr	1	496	5	17108	495	495	17143
KS	Jeffery Energy Ctr	2	525	7	18080	523	524	18118
KS	Jeffery Energy Ctr	3	598	7	20628	597	597	20672
KS	Judson Large	4	0	0	39	0	1	34
KS	Kaw	1	23	0	787	23	23	789
KS	Kaw	2	18	0	619	18	18	620
KS	Kaw	3	15	0	516	15	15	517
KS	Kingman	**9	1	0	51	1	1	51
KS	LaCygne	1	417	5	17941	416	416	14405
KS	LaCygne	2	437	5	15056	436	436	15087
KS	Lawrence	2	0	0	2	0	0	2
KS	Lawrence	3	18	0	2148	18	18	625
KS	Lawrence	4	27	0	1819	27	27	948
KS	Lawrence	5	109	1	5376	108	108	3752
KS	McPherson 2	1	0	0	1	0	0	1
KS	Mulvane	**7	0	0	5	0	0	5
KS	Mulvane	**8	0	0	5	0	0	5
KS	Murray Gill	1	0	0	1	0	0	1
KS	Murray Gill	2	0	0	5	0	0	5
KS	Murray Gill	3	0	0	50	0	1	44
KS	Murray Gill	4	0	0	62	0	2	54
KS	Nearman Creek	N1	201	2	6928	200	201	6942
KS	Neosho	7	0	0	13	0	0	13
KS	Quindaro	1	59	1	2031	59	59	2035
KS	Quindaro	2	60	1	2078	60	60	2082
KS	Riverton	39	30	0	1039	30	30	1041
KS	Riverton	40	51	1	1763	51	51	1766

Table 2 - Phase II Allowance Allocations								
			Allowances for Years 2000-2009				Years 2010 and Beyond	
State	Plant Name	Boiler1	(A) Auction Reserve Deduction	(B) Repower-ing Deduction	(C)2 Total Annual Phase II	(D) 1993-1998 Auction Deduction	(E) Auction Reserve Deduction	(F)3 Total Annual Phase II
KS	Russell	**11	1	0	31	1	1	31
KS	Russell	**12	1	0	30	1	1	30
KS	Tecumseh	10	43	0	3916	42	43	1470
KS	Tecumseh	9	27	0	2256	27	27	921
KS	Wamego	7	0	0	0	0	0	0
KY	Big Sandy	BSU1	186	2	6428	186	186	6441
KY	Big Sandy	BSU2	538	7	19711	537	537	18584
KY	Cane Run	**12	0	0	0	0	0	0
KY	Cane Run	**13	0	0	0	0	0	0
KY	Cane Run	3	1	0	39	1	1	39
KY	Cane Run	4	79	1	4521	79	79	2726
KY	Cane Run	5	125	1	4340	125	125	4330
KY	Cane Run	6	157	2	5498	157	157	5436
KY	Coleman	C1	137	1	4853	137	137	4862
KY	Coleman	C2	156	2	5534	156	156	5545
KY	Coleman	C3	150	2	5322	150	150	5332
KY	Cooper	1	91	1	3209	90	91	3216
KY	Cooper	2	187	2	6606	186	186	6619
KY	D B Wilson	W1	362	4	12461	361	361	12487
KY	Dale	3	49	1	1983	49	49	1693
KY	Dale	4	41	0	1847	40	40	1400
KY	E W Brown	1	87	1	3065	86	86	3071
KY	E W Brown	2	164	2	5805	164	164	5817
KY	E W Brown	3	318	3	11251	317	317	11273
KY	East Bend	2	531	7	18315	530	530	18354
KY	Elmer Smith	1	79	1	2804	79	79	2810
KY	Elmer Smith	2	176	2	6211	175	175	6224
KY	Ghent	1	346	4	12248	345	346	12272
KY	Ghent	2	291	3	12734	290	290	10038
KY	Ghent	3	405	4	13956	404	404	13985
KY	Ghent	4	398	4	13713	397	397	13742
KY	Green River	1	0	0	130	0	0	2
KY	Green River	2	0	0	851	0	0	16
KY	Green River	3	0	0	744	0	0	13
KY	Green River	4	82	1	2825	82	82	2830
KY	Green River	5	95	1	3371	95	95	3377
KY	H L Spurlock	1	278	3	9821	277	277	9841
KY	H L Spurlock	2	481	5	16586	480	480	16621
KY	Henderson 1	6	24	0	810	23	23	812
KY	HMP&L Station 2	H1	163	2	5756	162	162	5769
KY	HMP&L Station 2	H2	168	2	5934	167	167	5946
KY	Mill Creek	1	223	2	8080	222	222	7696
KY	Mill Creek	2	227	2	8140	227	227	7855
KY	Mill Creek	3	319	3	10979	318	318	11001
KY	Mill Creek	4	395	4	13618	394	394	13645

Table 2 - Phase II Allowance Allocations								
			Allowances for Years 2000-2009				Years 2010 and Beyond	
State	Plant Name	Boiler1	(A) Auction Reserve Deduction	(B) Repower-ing Deduction	(C)2 Total Annual Phase II	(D) 1993-1998 Auction Deduction	(E) Auction Reserve Deduction	(F)3 Total Annual Phase II
KY	NA 1 – 7220	**3	0	0	0	0	0	0
KY	NA 1 – 7220	**4	0	0	0	0	0	0
KY	NA 1 – 7220	**5	0	0	0	0	0	0
KY	Paradise	1	314	3	10818	313	313	10841
KY	Paradise	2	357	4	12300	356	356	12326
KY	Paradise	3	722	9	25504	720	721	25556
KY	Pineville	3	12	0	914	12	12	424
KY	R D Green	G1	154	2	5292	153	153	5303
KY	R D Green	G2	185	2	6376	184	185	6389
KY	Robert Reid	R1	27	0	942	27	27	944
KY	Shawnee	1	76	1	3643	76	76	2622
KY	Shawnee	10	138	2	4893	138	138	4903
KY	Shawnee	2	78	1	3672	78	78	2702
KY	Shawnee	3	88	1	3707	88	88	3043
KY	Shawnee	4	88	1	3593	87	87	3025
KY	Shawnee	5	86	1	3825	85	85	2954
KY	Shawnee	6	94	1	3711	94	94	3242
KY	Shawnee	7	104	1	3639	103	104	3581
KY	Shawnee	8	99	1	3570	99	99	3427
KY	Shawnee	9	106	1	3665	106	106	3672
KY	Trimble County	1	279	3	9631	279	279	9651
KY	Tyrone	1	0	0	0	0	0	0
KY	Tyrone	2	0	0	0	0	0	0
KY	Tyrone	3	0	0	0	0	0	0
KY	Tyrone	4	0	0	0	0	0	0
KY	Tyrone	5	20	0	1713	20	20	675
LA	A B Paterson	3	0	0	7	0	0	4
LA	A B Paterson	4	0	0	8	0	0	6
LA	Arsenal Hill	5A	0	0	30	0	1	18
LA	Big Cajun 1	1B1	0	0	27	0	1	37
LA	Big Cajun 1	1B2	0	0	27	0	1	34
LA	Big Cajun 2	2B1	415	4	14864	414	414	14322
LA	Big Cajun 2	2B2	409	4	14636	408	409	14142
LA	Big Cajun 2	2B3	408	4	14653	407	408	14106
LA	Coughlin	6	0	0	46	0	1	34
LA	Coughlin	7	0	0	128	0	4	139
LA	D G Hunter	3	0	0	0	0	0	9
LA	D G Hunter	4	0	0	32	0	1	24
LA	Doc Bonin	1	0	0	12	0	0	17
LA	Doc Bonin	2	0	0	24	0	1	30
LA	Doc Bonin	3	0	0	45	0	3	89
LA	Dolet Hills	1	595	7	20494	593	593	20535
LA	Houma	15	0	0	10	0	0	14
LA	Houma	16	0	0	14	0	1	28
LA	Lieberman	3	0	0	86	0	2	85

Table 2 - Phase II Allowance Allocations

State	Plant Name	Boiler1	Allowances for Years 2000-2009				Years 2010 and Beyond	
			(A) Auction Reserve Deduction	(B) Repower-ing Deduction	(C)2 Total Annual Phase II	(D) 1993-1998 Auction Deduction	(E) Auction Reserve Deduction	(F)3 Total Annual Phase II
LA	Lieberman	4	0	0	72	0	2	63
LA	Little Gypsy	1	1	0	245	1	6	223
LA	Little Gypsy	2	2	0	378	2	10	351
LA	Little Gypsy	3	3	0	543	3	14	473
LA	Louisiana 1	1A	0	0	116	0	0	17
LA	Louisiana 1	2A	0	0	2	0	0	17
LA	Louisiana 1	3A	0	0	2	0	0	17
LA	Louisiana 2	10	0	0	0	0	0	0
LA	Louisiana 2	11	0	0	0	0	0	0
LA	Louisiana 2	12	0	0	0	0	0	0
LA	Michoud	1	0	0	71	0	2	83
LA	Michoud	2	0	0	106	0	4	138
LA	Michoud	3	1	0	491	1	13	467
LA	Monroe	11	0	0	13	0	0	12
LA	Monroe	12	0	0	45	0	1	38
LA	Morgan City	4	0	0	5	0	0	5
LA	Natchitoches	10	0	0	0	0	0	0
LA	Ninemile Point	1	1	0	62	1	2	65
LA	Ninemile Point	2	1	0	112	1	3	103
LA	Ninemile Point	3	1	0	96	1	3	86
LA	Ninemile Point	4	3	0	691	3	18	611
LA	Ninemile Point	5	4	0	930	4	23	811
LA	Opelousas	10	0	0	1	0	0	1
LA	R S Nelson	3	0	0	39	0	1	26
LA	R S Nelson	4	0	0	123	0	8	279
LA	R S Nelson	6	541	7	19562	540	540	18701
LA	Rodemacher	1	86	1	3248	86	86	2975
LA	Rodemacher	2	527	7	18902	526	526	18212
LA	Ruston	2	0	0	4	0	0	6
LA	Ruston	3	0	0	5	0	1	22
LA	Sterlington	10	1	0	174	1	5	156
LA	Sterlington	7AB	0	0	72	0	2	72
LA	Teche	2	0	0	27	0	1	22
LA	Teche	3	0	0	446	0	11	368
LA	Waterford 1 & 2	1	124	1	4553	123	123	4269
LA	Waterford 1 & 2	2	96	1	3534	96	96	3313
LA	Willow Glen	1	0	0	99	0	3	87
LA	Willow Glen	2	0	0	26	0	1	20
LA	Willow Glen	3	0	0	93	0	1	32
LA	Willow Glen	4	0	0	291	0	9	295
LA	Willow Glen	5	1	0	458	1	13	437
ME	Graham Station	5	10	0	344	10	10	344
ME	Mason Steam	3	0	0	2	0	0	2
ME	Mason Steam	4	0	0	1	0	0	1
ME	Mason Steam	5	0	0	1	0	0	1

Table 2 - Phase II Allowance Allocations								
			Allowances for Years 2000-2009				Years 2010 and Beyond	
State	Plant Name	Boiler1	(A) Auction Reserve Deduction	(B) Repower-ing Deduction	(C)2 Total Annual Phase II	(D) 1993-1998 Auction Deduction	(E) Auction Reserve Deduction	(F)3 Total Annual Phase II
ME	William F Wyman	1	14	0	1159	13	13	467
ME	William F Wyman	2	16	0	1161	16	16	549
ME	William F Wyman	3	78	1	2945	78	78	2693
ME	William F Wyman	4	182	2	6272	181	182	6284
MD	Brandon Shores	1	537	7	18503	535	536	18542
MD	Brandon Shores	2	226	2	7793	225	226	7808
MD	C P Crane	1	126	1	4348	126	126	4356
MD	C P Crane	2	117	1	4042	117	117	4049
MD	Chalk Point	**GT3	21	0	707	20	20	709
MD	Chalk Point	**GT4	21	0	707	20	20	709
MD	Chalk Point	**GT5	26	0	894	26	26	896
MD	Chalk Point	**GT6	26	0	894	26	26	896
MD	Chalk Point	1	267	3	9199	266	266	9218
MD	Chalk Point	2	296	3	10216	296	296	10236
MD	Chalk Point	3	151	2	12501	151	151	5229
MD	Chalk Point	4	75	1	2599	75	75	2605
MD	Dickerson	1	170	2	5846	169	169	5859
MD	Dickerson	2	160	2	5498	159	159	5510
MD	Dickerson	3	170	2	5844	169	169	5856
MD	Dickerson	CW1	0	0	0	0	0	0
MD	Dickerson	GT2	31	0	1082	31	31	1084
MD	Dickerson	GT3	31	0	1082	31	31	1084
MD	Dickerson	HCT3	0	0	0	0	0	0
MD	Dickerson	HCT4	0	0	0	0	0	0
MD	Easton 2	**25	0	0	0	0	0	0
MD	Easton 2	**26	0	0	0	0	0	0
MD	Easton 2	**27	0	0	0	0	0	0
MD	Gould Street	3	24	0	821	24	24	823
MD	Herbert A Wagner	1	37	0	1291	37	37	1293
MD	Herbert A Wagner	2	38	0	1299	38	38	1301
MD	Herbert A Wagner	3	243	3	8378	242	243	8395
MD	Herbert A Wagner	4	44	0	1520	44	44	1523
MD	Morgantown	1	491	5	16927	490	490	16962
MD	Morgantown	2	469	5	16184	468	469	16216
MD	Nanticoke	**ST1	0	0	0	0	0	0
MD	Perryman	**51	0	0	0	0	0	0
MD	Perryman	**52	0	0	0	0	0	0
MD	Perryman	**61	0	0	0	0	0	0
MD	Perryman	**62	0	0	0	0	0	0
MD	R P Smith	11	66	1	2313	66	66	2272
MD	R P Smith	9	8	0	634	8	8	281
MD	Riverside	1	5	0	189	5	5	190
MD	Riverside	2	5	0	171	5	5	172
MD	Riverside	3	10	0	354	10	10	354
MD	Riverside	4	13	0	455	13	13	456

Table 2 - Phase II Allowance Allocations

State	Plant Name	Boiler1	Allowances for Years 2000-2009				Years 2010 and Beyond	
			(A) Auction Reserve Deduction	(B) Repower-ing Deduction	(C)2 Total Annual Phase II	(D) 1993-1998 Auction Deduction	(E) Auction Reserve Deduction	(F)3 Total Annual Phase II
MD	Riverside	5	9	0	294	9	9	295
MD	Vienna	8	53	1	3644	53	53	1819
MD	Westport	3	5	0	186	5	5	187
MD	Westport	4	8	0	258	7	7	259
MA	Brayton Point	1	246	3	8478	245	246	8496
MA	Brayton Point	2	258	3	8908	258	258	8926
MA	Brayton Point	3	540	7	18618	539	539	18658
MA	Brayton Point	4	336	4	12135	336	336	11621
MA	Canal	1	357	4	13231	356	356	12327
MA	Canal	2	522	6	17993	521	521	18031
MA	Cannon Street	3	1†	0	374	11	11	374
MA	Cleary Flood	8	4	0	143	4	4	143
MA	Cleary Flood	9	46	0	2679	46	46	1577
MA	Kendall Square	1	5	0	199	5	5	198
MA	Kendall Square	2	6	0	208	5	5	208
MA	Kendall Square	3	12	0	421	12	12	422
MA	Mount Tom	1	163	2	5609	162	162	5622
MA	Mystic	4	76	1	2606	75	75	2612
MA	Mystic	5	90	1	3091	89	90	3098
MA	Mystic	6	89	1	3075	89	89	3081
MA	Mystic	7	500	5	17239	499	499	17274
MA	New Boston	1	179	2	6156	178	178	6169
MA	New Boston	2	183	2	6322	183	183	6335
MA	Salem Harbor	1	97	1	3338	97	97	3345
MA	Salem Harbor	2	99	1	3407	99	99	3414
MA	Salem Harbor	3	158	2	5459	158	158	5470
MA	Salem Harbor	4	357	4	12567	356	357	12346
MA	Somerset	1	0	0	0	0	0	0
MA	Somerset	2	0	0	0	0	0	0
MA	Somerset	3	0	0	0	0	0	0
MA	Somerset	4	0	0	0	0	0	0
MA	Somerset	5	0	0	0	0	0	0
MA	Somerset	6	0	0	0	0	0	0
MA	Somerset	7	80	1	2764	80	80	2770
MA	Somerset	8	116	1	3984	115	115	3993
MA	Waters River	**2	7	0	247	7	7	247
MA	West Springfield	1	11	0	378	11	11	379
MA	West Springfield	2	10	0	356	10	10	356
MA	West Springfield	3	87	1	3011	87	87	3017
MI	491 E. 48th Street	**7	9	0	298	9	9	299
MI	491 E. 48th Street	**8	9	0	298	9	9	299
MI	B C Cobb	1	13	0	1142	13	13	442
MI	B C Cobb	2	14	0	1229	13	14	475
MI	B C Cobb	3	13	0	1223	13	13	473
MI	B C Cobb	4	133	1	4572	132	132	4582

Table 2 - Phase II Allowance Allocations								
			Allowances for Years 2000-2009				Years 2010 and Beyond	
State	Plant Name	Boiler1	(A) Auction Reserve Deduction	(B) Repower-ing Deduction	(C)2 Total Annual Phase II	(D) 1993-1998 Auction Deduction	(E) Auction Reserve Deduction	(F)3 Total Annual Phase II
MI	B C Cobb	5	136	1	4694	136	136	4702
MI	Belle River	1	537	6	18499	535	536	18536
MI	Belle River	2	544	6	18763	543	543	18801
MI	Conners Creek	15	17	0	4285	17	17	589
MI	Conners Creek	16	17	0	4279	17	17	581
MI	Conners Creek	17	15	0	4034	15	15	554
MI	Conners Creek	18	13	0	3353	13	13	450
MI	Dan E Karn	1	227	2	7809	226	226	7825
MI	Dan E Karn	2	248	3	8564	248	248	8582
MI	Dan E Karn	3	30	0	1020	30	30	1023
MI	Dan E Karn	4	27	0	948	27	27	949
MI	Delray	10	0	0	14	0	0	14
MI	Delray	12	0	0	14	0	0	12
MI	Delray	7	0	0	0	0	0	0
MI	Delray	8	0	0	12	0	0	12
MI	Delray	9	0	0	0	0	0	0
MI	Eckert Station	1	34	0	1298	34	34	1176
MI	Eckert Station	2	35	0	1354	35	35	1225
MI	Eckert Station	3	32	0	1327	32	32	1116
MI	Eckert Station	4	64	1	2222	64	64	2227
MI	Eckert Station	5	77	1	2665	77	77	2670
MI	Eckert Station	6	68	1	2342	68	68	2347
MI	Ednicott Generating	1	53	1	1809	52	52	1814
MI	Erickson	1	193	2	6644	192	192	6659
MI	Greenwood	1	16	0	539	16	16	541
MI	Harbor Beach	1	41	0	3520	41	41	1427
MI	J B Sims	3	43	0	1484	43	43	1487
MI	J C Weadock	7	138	1	4744	137	137	4754
MI	J C Weadock	8	136	1	4690	136	136	4699
MI	J H Campbell	1	235	3	8095	234	234	8113
MI	J H Campbell	2	281	3	9682	280	280	9702
MI	J H Campbell	3	798	10	27471	796	797	27529
MI	J R Whiting	1	99	1	3411	99	99	3418
MI	J R Whiting	2	101	1	3493	101	101	3500
MI	J R Whiting	3	130	1	4467	129	129	4477
MI	James De Young	5	30	0	1048	30	30	1050
MI	Marysville	10	13	0	1261	13	13	432
MI	Marysville	11	13	0	1315	13	13	450
MI	Marysville	12	11	0	1061	11	11	363
MI	Marysville	9	16	0	1637	16	16	560
MI	Mistersky	5	7	0	257	7	7	257
MI	Mistersky	6	13	0	437	13	13	438
MI	Mistersky	7	14	0	485	14	14	487
MI	Monroe (4)	1	692	9	23830	690	691	23882
MI	Monroe (4)	2	719	9	24731	716	717	24785

Table 2 - Phase II Allowance Allocations

State	Plant Name	Boiler1	Allowances for Years 2000-2009				Years 2010 and Beyond	
			(A) Auction Reserve Deduction	(B) Repower-ing Deduction	(C)2 Total Annual Phase II	(D) 1993-1998 Auction Deduction	(E) Auction Reserve Deduction	(F)3 Total Annual Phase II
MI	Monroe (4)	3	672	8	23151	670	672	23200
MI	Monroe (4)	4	739	9	25424	737	737	25478
MI	Presque Isle	2	7	0	637	7	7	246
MI	Presque Isle	3	55	1	1906	55	55	1910
MI	Presque Isle	4	48	1	1676	48	48	1673
MI	Presque Isle	5	85	1	2933	85	85	2938
MI	Presque Isle	6	85	1	2940	85	85	2946
MI	Presque Isle	7	63	1	2215	63	63	2173
MI	Presque Isle	8	59	1	2191	59	59	2050
MI	Presque Isle	9	44	0	2346	44	44	1511
MI	River Rouge	1	2	0	79	2	2	79
MI	River Rouge	2	180	2	6321	179	179	6203
MI	River Rouge	3	264	3	9100	263	264	9118
MI	Shiras	3	15	0	500	14	14	502
MI	St Clair	1	106	1	3665	106	106	3672
MI	St Clair	2	103	1	3542	103	103	3549
MI	St Clair	3	102	1	3524	102	102	3530
MI	St Clair	4	98	1	3395	98	98	3402
MI	St Clair	5	0	0	0	0	0	0
MI	St Clair	6	213	2	7340	212	213	7355
MI	St Clair	7	390	4	13455	389	390	13482
MI	Trenton Channel	16	67	0	3292	66	66	2297
MI	Trenton Channel	17	16	0	767	16	16	534
MI	Trenton Channel	18	72	0	3563	72	72	2485
MI	Trenton Channel	19	14	0	698	14	14	488
MI	Trenton Channel	9A	421	5	14502	420	420	14532
MI	Wyandotte	5	15	0	960	15	15	549
MI	Wyandotte	7	15	0	953	15	15	545
MN	Allen S King	1	453	5	15623	452	452	15655
MN	Black Dog	1	10	0	1914	10	10	331
MN	Black Dog	2	13	0	3683	13	13	458
MN	Black Dog	3	29	0	2275	29	29	989
MN	Black Dog	4	62	1	4055	62	62	2130
MN	Clay Boswell	1	36	0	1827	36	36	1248
MN	Clay Boswell	2	34	0	1800	34	34	1188
MN	Clay Boswell	3	286	3	9863	285	286	9882
MN	Clay Boswell	4	299	3	10321	299	299	10342
MN	Fox Lake	3	31	0	2069	31	31	1068
MN	High Bridge	3	23	0	2118	23	23	795
MN	High Bridge	4	18	0	1458	18	18	614
MN	High Bridge	5	31	0	2194	31	31	1087
MN	High Bridge	6	54	1	1851	54	54	1855
MN	Hoot Lake	2	9	0	1242	9	9	310
MN	Hoot Lake	3	31	0	1978	31	31	1078
MN	M L Hibbard	3	1	0	987	1	1	30

Table 2 - Phase II Allowance Allocations								
			Allowances for Years 2000-2009				Years 2010 and Beyond	
State	Plant Name	Boiler1	(A) Auction Reserve Deduction	(B) Repower-ing Deduction	(C)2 Total Annual Phase II	(D) 1993-1998 Auction Deduction	(E) Auction Reserve Deduction	(F)3 Total Annual Phase II
MN	M L Hibbard	4	0	0	1094	0	0	10
MN	Minnesota Valley	4	2	0	938	2	2	62
MN	Northeast Station	NEPP	31	0	1052	30	30	1055
MN	Riverside	6	7	0	3076	7	7	227
MN	Riverside	7	3	0	1339	3	3	90
MN	Riverside	8	109	1	5067	109	109	3779
MN	Sherburne County	1	380	4	13087	379	379	13115
MN	Sherburne County	2	382	4	13180	381	382	13206
MN	Sherburne County	3	376	4	12952	375	375	12979
MN	Silver Lake	4	91	1	3132	91	91	3138
MN	Syl Laskin	1	9	0	1692	9	9	321
MN	Syl Laskin	2	4	0	1649	4	4	139
MS	Baxter Wilson	1	1	0	360	1	9	321
MS	Baxter Wilson	2	103	1	3563	103	103	3570
MS	Delta	1	0	0	26	0	1	24
MS	Delta	2	1	0	50	1	1	48
MS	Gerald Andrus	1	95	1	3281	95	95	3287
MS	Jack Watson	1	5	0	172	5	5	173
MS	Jack Watson	2	5	0	180	5	5	181
MS	Jack Watson	3	8	0	273	8	8	273
MS	Jack Watson	4	218	2	7523	218	218	7537
MS	Jack Watson	5	447	5	15410	446	446	15442
MS	Moselle	**4	0	0	0	0	0	0
MS	Moselle	**5	0	0	0	0	0	0
MS	Moselle	**6	0	0	0	0	0	0
MS	Moselle	**7	0	0	0	0	0	0
MS	Moselle	1	0	0	35	0	1	33
MS	Moselle	2	1	0	76	1	2	70
MS	Moselle	3	0	0	42	0	1	38
MS	Natchez	1	0	0	2	0	0	3
MS	R D Morrow	1	139	2	4798	139	139	4808
MS	R D Morrow	2	152	2	5252	152	152	5263
MS	Rex Brown	1A	0	0	6	0	0	5
MS	Rex Brown	1B	0	0	6	0	0	5
MS	Rex Brown	3	0	0	41	0	1	37
MS	Rex Brown	4	0	0	159	0	4	139
MS	Sweatt	1	2	0	78	2	2	78
MS	Sweatt	2	3	0	86	2	2	86
MS	Victor J Daniel Jr	1	287	3	11225	286	287	9916
MS	Victor J Daniel Jr	2	414	4	14273	413	413	14303
MO	Asbury	1	197	2	6973	196	197	6986
MO	Blue Valley	3	135	1	4669	135	135	4678
MO	Chamois	2	158	2	5455	158	158	5466
MO	Columbia	6	26	0	903	26	26	905
MO	Columbia	7	105	1	3630	104	104	3639

Table 2 - Phase II Allowance Allocations

State	Plant Name	Boiler1	Allowances for Years 2000-2009				Years 2010 and Beyond	
			(A) Auction Reserve Deduction	(B) Repower-ing Deduction	(C)2 Total Annual Phase II	(D) 1993-1998 Auction Deduction	(E) Auction Reserve Deduction	(F)3 Total Annual Phase II
MO	Columbia	8	3	0	125	3	3	125
MO	Combustion Turbine 1	**1	0	0	0	0	0	0
MO	Combustion Turbine 1	**NA4	0	0	0	0	0	0
MO	Combustion Turbine 1	**NA5	0	0	0	0	0	0
MO	Combustion Turbine 1	**NA6	0	0	0	0	0	0
MO	Combustion Turbine 2	**2	0	0	0	0	0	0
MO	Combustion Turbine 3	**3	0	0	0	0	0	0
MO	Hawthorn	5	356	4	12769	355	356	12309
MO	Iatan	**2	0	0	0	0	0	0
MO	Iatan	1	470	5	16203	469	469	16236
MO	James River	**GT2	18	0	604	18	18	605
MO	James River	3	96	1	3326	96	20	681
MO	James River	4	173	2	5973	173	36	1253
MO	James River	5	60	1	2132	60	60	2136
MO	Jim Hill	**1	0	0	0	0	0	0
MO	Labadie	1	496	5	17548	495	495	17583
MO	Labadie	2	462	5	16358	461	461	16391
MO	Labadie	3	494	5	17482	493	493	17516
MO	Labadie	4	440	5	15579	439	439	15611
MO	Lake Road	6	18	0	605	18	18	606
MO	Meramec	1	30	0	2745	30	30	1029
MO	Meramec	2	32	0	2778	32	32	1105
MO	Meramec	3	68	1	6057	68	68	2362
MO	Meramec	4	74	1	7174	74	74	2554
MO	Montrose	1	90	1	3188	90	90	3194
MO	Montrose	2	100	1	3534	100	100	3541
MO	Montrose	3	123	1	4348	123	123	4356
MO	NA1 – 7223	**1	0	0	0	0	0	0
MO	NA 1 – 7223	**2	0	0	0	0	0	0
MO	NA 1 – 7223	**3	0	0	0	0	0	0
MO	NA 1 – 7226	**1	0	0	0	0	0	0
MO	New Madrid	1	344	4	12174	343	343	12198
MO	New Madrid	2	396	4	14005	395	395	14033
MO	RG 1 & 2	**1	0	0	0	0	0	0
MO	RG 1 & 2	**2	0	0	0	0	0	0
MO	Rush Island	1	402	4	14956	401	402	13900
MO	Rush Island	2	449	5	15647	448	449	15518
MO	Sibley	1	15	0	519	15	15	520
MO	Sibley	2	18	0	638	18	18	639
MO	Sibley	3	216	2	7632	215	215	7648
MO	Sikeston	1	197	2	6789	196	197	6802
MO	Sioux	1	306	3	10820	305	305	10842
MO	Sioux	2	268	3	9489	267	268	9507
MO	Southwest	1	119	1	4183	119	119	4127
MO	Thomas Hill	MB1	125	1	4420	125	125	4429

Table 2 - Phase II Allowance Allocations								
			Allowances for Years 2000-2009				Years 2010 and Beyond	
State	Plant Name	Boiler1	(A) Auction Reserve Deduction	(B) Repower-ing Deduction	(C)2 Total Annual Phase II	(D) 1993-1998 Auction Deduction	(E) Auction Reserve Deduction	(F)3 Total Annual Phase II
MO	Thomas Hill	MB2	210	2	7430	209	210	7444
MO	Thomas Hill	MB3	529	6	18251	528	529	18288
MT	Colstrip	1	213	2	7857	213	213	7372
MT	Colstrip	2	213	2	7868	212	212	7349
MT	Colstrip	3	106	1	4404	106	106	3678
MT	Colstrip	4	85	1	2916	84	84	2923
MT	Frank Bird	1	0	0	0	0	0	0
MT	J E Corette	2	141	2	5060	141	141	4884
MT	Lewis & Clark	B1	41	0	1444	41	41	1403
NE	Bluffs	4	1	0	18	1	1	18
NE	C W Burdick	B-3	0	0	0	0	0	0
NE	Canaday	1	18	0	627	18	18	628
NE	Gerald Gentleman	1	259	3	10802	259	259	8960
NE	Gerald Gentleman	2	510	6	17566	508	509	17693
NE	Gerald T Whelan	1	68	1	2334	68	68	2338
NE	Harold Kramer	1	0	0	38	0	0	3
NE	Harold Kramer	2	0	0	40	0	0	3
NE	Harold Kramer	3	5	0	1052	5	5	168
NE	Harold Kramer	4	6	0	2079	6	6	198
NE	Lon Wright	8	34	0	2044	34	34	1184
NE	NA 1 – 7019	**NA1	0	0	0	0	0	0
NE	Nebraska City	1	383	4	13190	382	382	13217
NE	North Omaha	1	30	0	2388	30	30	1045
NE	North Omaha	2	47	1	3286	47	47	1614
NE	North Omaha	3	55	1	3207	55	55	1900
NE	North Omaha	4	73	1	3848	73	73	2515
NE	North Omaha	5	88	1	4646	88	88	3043
NE	Platte	1	85	1	2926	85	85	2932
NE	Sheldon	1	23	0	2168	23	23	792
NE	Sheldon	2	24	0	2280	24	24	846
NV	Clark	1	0	0	20	0	1	22
NV	Clark	2	8	0	273	8	8	261
NV	Clark	3	0	0	18	0	0	16
NV	Fort Churchill	1	10	0	371	10	10	356
NV	Fort Churchill	2	16	0	577	16	16	544
NV	Harry Allen	**1	0	0	0	0	0	0
NV	Harry Allen	**2	0	0	0	0	0	0
NV	Harry Allen	**3	0	0	0	0	0	0
NV	Harry Allen	**4	0	0	0	0	0	0
NV	Harry Allen	**GT1	0	0	0	0	0	0
NV	Harry Allen	**GT2	0	0	0	0	0	0
NV	Harry Allen	**GT3	0	0	0	0	0	0
NV	Harry Allen	**GT4	0	0	0	0	0	0
NV	Mohave	1	759	9	26651	757	757	26165
NV	Mohave	2	756	9	26547	753	754	26059

Table 2 - Phase II Allowance Allocations

State	Plant Name	Boiler1	Allowances for Years 2000-2009				Years 2010 and Beyond	
			(A) Auction Reserve Deduction	(B) Repower-ing Deduction	(C)2 Total Annual Phase II	(D) 1993-1998 Auction Deduction	(E) Auction Reserve Deduction	(F)3 Total Annual Phase II
NV	North Valmy	1	190	2	6958	190	190	6569
NV	North Valmy	2	115	1	4261	115	115	3966
NV	Reid Gardner	1	57	1	2172	57	57	1985
NV	Reid Gardner	2	59	1	2201	59	59	2025
NV	Reid Gardner	3	57	1	2124	57	57	1968
NV	Reid Gardner	4	68	1	2813	68	68	2342
NV	Sunrise	1	1	0	50	1	2	52
NV	Tracy	1	0	0	15	0	0	14
NV	Tracy	2	1	0	46	1	1	42
NV	Tracy	3	9	0	314	9	9	304
NH	Merrimack	1	124	1	4287	124	124	4296
NH	Merrimack	2	268	3	9239	267	268	9257
NH	Newington	1	307	3	11660	306	307	10613
NH	Schiller	4	42	0	1514	42	42	1440
NH	Schiller	5	38	0	1457	38	38	1298
NH	Schiller	6	48	1	1642	48	48	1646
NJ	B L England	1	111	1	3810	110	110	3818
NJ	B L England	2	143	2	4929	143	143	4939
NJ	B L England	3	70	1	2419	70	70	2424
NJ	Bergen	1	57	1	1977	57	57	1981
NJ	Bergen	2	59	1	2043	59	59	2047
NJ	Burlington	7	16	0	561	16	16	562
NJ	Deepwater	1	34	0	1164	34	34	1166
NJ	Deepwater	3	0	0	11	0	0	11
NJ	Deepwater	4	2	0	59	2	2	58
NJ	Deepwater	5	0	0	5	0	0	5
NJ	Deepwater	6	2	0	59	2	2	58
NJ	Deepwater	8	80	1	2743	79	79	2751
NJ	Deepwater	9	53	1	1813	52	53	1817
NJ	Gilbert	01	2	0	60	2	2	60
NJ	Gilbert	02	2	0	37	2	2	37
NJ	Gilbert	03	20	0	700	20	20	701
NJ	Gilbert	04	17	0	600	17	17	601
NJ	Gilbert	05	17	0	596	17	17	597
NJ	Gilbert	06	17	0	593	17	17	594
NJ	Gilbert	07	18	0	605	18	18	606
NJ	Hudson	1	35	0	1197	35	35	1199
NJ	Hudson	2	440	5	15967	439	440	15209
NJ	Kearny	7	4	0	145	4	4	146
NJ	Kearny	8	4	0	153	4	4	154
NJ	Linden	11	28	0	968	28	28	970
NJ	Linden	12	19	0	665	19	19	666
NJ	Linden	13	25	0	877	25	25	879
NJ	Linden	2	19	0	644	19	19	645
NJ	Linden	4	12	0	423	12	12	423

Table 2 - Phase II Allowance Allocations								
			Allowances for Years 2000-2009				Years 2010 and Beyond	
State	Plant Name	Boiler1	(A) Auction Reserve Deduction	(B) Repower-ing Deduction	(C)2 Total Annual Phase II	(D) 1993-1998 Auction Deduction	(E) Auction Reserve Deduction	(F)3 Total Annual Phase II
NJ	Mercer	1	221	2	7681	220	220	7616
NJ	Mercer	2	203	2	7437	202	203	7006
NJ	Sayreville	02	0	0	2	0	0	2
NJ	Sayreville	03	0	0	2	0	0	2
NJ	Sayreville	05	0	0	41	0	0	41
NJ	Sayreville	06	0	0	39	0	0	39
NJ	Sayreville	07	22	0	766	22	22	767
NJ	Sayreville	08	26	0	892	26	26	893
NJ	Sewaren	1	3	0	117	3	3	117
NJ	Sewaren	2	10	0	340	10	10	341
NJ	Sewaren	3	7	0	254	7	7	255
NJ	Sewaren	4	17	0	574	17	17	575
NJ	Sewaren	5	0	0	0	0	0	0
NJ	Werner	04	6	0	194	6	6	195
NM	Cunningham	121B	0	0	42	0	1	44
NM	Cunningham	122B	0	0	269	0	6	203
NM	Escalante	1	42	0	1874	42	42	1466
NM	Four Corners	1	96	1	3592	96	96	3323
NM	Four Corners	2	96	1	3588	96	96	3323
NM	Four Corners	3	120	1	4477	120	120	4162
NM	Four Corners	4	344	4	12503	343	343	11881
NM	Four Corners	5	356	4	13271	355	356	12305
NM	Maddox	051B	0	0	170	0	4	122
NM	North Lovington	S2	0	0	0	0	0	0
NM	Person	3	0	0	0	0	0	0
NM	Person	4	0	0	0	0	0	0
NM	Reeves	1	0	0	4	0	0	6
NM	Reeves	2	0	0	7	0	0	5
NM	Reeves	3	3	0	104	3	3	101
NM	Rio Grande	6	0	0	3	0	0	5
NM	Rio Grande	7	0	0	1	0	0	1
NM	Rio Grande	8	0	0	80	0	2	62
NM	San Juan	1	214	2	7939	213	213	7384
NM	San Juan	2	157	2	5920	156	156	5410
NM	San Juan	3	376	4	13874	375	376	13002
NM	San Juan	4	353	4	13043	352	353	12200
NY	59TH Street	110	2	0	64	2	2	64
NY	74TH Street	120	13	0	447	13	13	448
NY	74TH Street	121	13	0	449	13	13	450
NY	74TH Street	122	13	0	447	13	13	448
NY	Albany	1	52	1	1800	52	52	1803
NY	Albany	2	45	0	1556	45	45	1558
NY	Albany	3	46	1	1592	46	46	1597
NY	Albany	4	49	1	1686	49	49	1690
NY	Arthur Kill	20	43	0	1478	43	43	1480

Table 2 - Phase II Allowance Allocations

State	Plant Name	Boiler1	Allowances for Years 2000-2009				Years 2010 and Beyond	
			(A) Auction Reserve Deduction	(B) Repower-ing Deduction	(C)2 Total Annual Phase II	(D) 1993-1998 Auction Deduction	(E) Auction Reserve Deduction	(F)3 Total Annual Phase II
NY	Arthur Kill	30	69	1	2366	68	69	2371
NY	Astoria	10	35	0	1216	35	35	1218
NY	Astoria	20	45	0	1554	45	45	1556
NY	Astoria	30	88	1	3023	87	88	3029
NY	Astoria	40	69	1	2375	69	69	2380
NY	Astoria	50	78	1	2699	78	78	2705
NY	Bowline Point	1	123	1	4239	123	123	4247
NY	Bowline Point	2	123	1	4240	123	123	4248
NY	C R Huntley	63	71	1	2656	71	71	2465
NY	C R Huntley	64	76	1	2663	76	76	2624
NY	C R Huntley	65	78	1	2692	78	78	2697
NY	C R Huntley	66	79	1	2728	79	79	2733
NY	C R Huntley	67	168	2	5773	167	167	5785
NY	C R Huntley	68	156	2	5379	156	156	5390
NY	Charles Poletti	001	187	2	6436	186	186	6450
NY	Danskammer	1	28	0	948	27	27	950
NY	Danskammer	2	27	0	920	27	27	921
NY	Danskammer	3	91	1	3128	91	91	3134
NY	Danskammer	4	175	2	6028	174	175	6041
NY	Dunkirk	1	82	1	2842	82	82	2848
NY	Dunkirk	2	94	1	3228	93	93	3235
NY	Dunkirk	3	153	2	5290	153	153	5300
NY	Dunkirk	4	171	2	5904	171	171	5916
NY	E F Barrett	10	69	1	2371	69	69	2375
NY	E F Barrett	20	68	1	2336	68	68	2341
NY	East River	50	41	0	1396	40	40	1400
NY	East River	60	41	0	1430	41	41	1432
NY	East River	70	30	0	1033	30	30	1035
NY	Far Rockaway	40	14	0	469	14	14	470
NY	Glenwood	40	27	0	939	27	27	940
NY	Glenwood	50	26	0	903	26	26	905
NY	Goudey	11	23	0	792	23	23	793
NY	Goudey	12	23	0	780	23	23	782
NY	Goudey	13	95	1	3287	95	95	3293
NY	Greenidge	4	28	0	982	28	28	983
NY	Greenidge	5	28	0	980	28	28	981
NY	Greenidge	6	92	1	3184	92	92	3190
NY	Hickling	1	21	0	725	20	20	709
NY	Hickling	2	21	0	725	20	20	709
NY	Hickling	3	25	0	895	25	25	849
NY	Hickling	4	26	0	933	26	26	885
NY	Jennison	1	17	0	650	17	17	600
NY	Jennison	2	18	0	676	18	18	624
NY	Jennison	3	18	0	724	18	18	626
NY	Jennison	4	18	0	724	18	18	626

Table 2 - Phase II Allowance Allocations								
			Allowances for Years 2000-2009				Years 2010 and Beyond	
State	Plant Name	Boiler1	(A) Auction Reserve Deduction	(B) Repower-ing Deduction	(C)2 Total Annual Phase II	(D) 1993-1998 Auction Deduction	(E) Auction Reserve Deduction	(F)3 Total Annual Phase II
NY	Kintigh	1	403	4	13885	402	402	13913
NY	Lovett	3	7	0	225	7	7	226
NY	Lovett	4	133	1	4568	132	132	4578
NY	Lovett	5	145	2	4986	144	144	4997
NY	Milliken	1	143	2	4926	143	143	4936
NY	Milliken	2	151	2	5213	151	151	5224
NY	Northport	1	241	3	8320	241	241	8337
NY	Northport	2	294	3	10127	293	293	10147
NY	Northport	3	323	4	11118	322	322	11142
NY	Northport	4	168	2	5792	168	168	5803
NY	Oswego	1	0	0	0	0	0	0
NY	Oswego	2	0	0	0	0	0	0
NY	Oswego	3	3	0	90	3	3	90
NY	Oswego	4	12	0	398	12	12	398
NY	Oswego	5	241	3	17239	240	241	8327
NY	Oswego	6	139	2	4806	139	139	4816
NY	Port Jefferson	1	14	0	475	14	14	476
NY	Port Jefferson	2	14	0	498	14	14	499
NY	Port Jefferson	3	128	1	4396	127	127	4405
NY	Port Jefferson	4	150	2	5179	150	150	5190
NY	Ravenswood	10	92	1	3164	92	92	3170
NY	Ravenswood	20	78	1	2677	77	78	2682
NY	Ravenswood	30	145	2	4990	144	145	5000
NY	Rochester 3	12	66	1	2268	66	66	2273
NY	Rochester 3	3	0	0	2	0	0	2
NY	Rochester 3	7	2	0	201	2	2	62
NY	Rochester 3	8	0	0	0	0	0	0
NY	Rochester 7	1	32	0	1093	32	32	1095
NY	Rochester 7	2	47	1	1625	47	47	1629
NY	Rochester 7	3	46	0	1586	46	46	1589
NY	Rochester 7	4	64	1	2212	64	64	2217
NY	Roseton	1	421	5	15579	420	420	14532
NY	Roseton	2	375	4	14908	374	375	12962
NY	S A Carlson	10	19	0	673	19	19	674
NY	S A Carlson	11	13	0	424	19	13	426
NY	S A Carlson	12	37	0	1276	13	37	1278
NY	S A Carlson	9	19	0	664	36	19	666
NY	Waterside	41	7	0	252	7	7	253
NY	Waterside	42	7	0	247	7	7	248
NY	Waterside	51	13	0	416	13	13	416
NY	Waterside	52	13	0	417	12	12	418
NY	Waterside	61	12	0	431	12	12	431
NY	Waterside	62	14	0	507	14	14	507
NY	Waterside	80	33	0	1128	33	33	1129
NY	Waterside	90	35	0	1234	35	35	1236

Table 2 - Phase II Allowance Allocations

State	Plant Name	Boiler1	Allowances for Years 2000-2009				Years 2010 and Beyond	
			(A) Auction Reserve Deduction	(B) Repower-ing Deduction	(C)2 Total Annual Phase II	(D) 1993-1998. Auction Deduction	(E) Auction Reserve Deduction	(F)3 Total Annual Phase II
NC	Asheville	1	192	2	6620	192	192	6633
NC	Asheville	2	153	2	5259	152	152	5271
NC	Belews Creek	1	898	11	30900	895	896	30966
NC	Belews Creek	2	945	11	32549	943	944	32616
NC	Buck	5	0	0	1031	0	0	2
NC	Buck	6	0	0	589	0	0	1
NC	Buck	7	10	0	1058	10	10	344
NC	Buck	8	17	0	2322	17	17	602
NC	Buck	9	53	1	2870	53	53	1818
NC	Cape Fear	3	0	0	599	0	0	0
NC	Cape Fear	4	0	0	599	0	0	0
NC	Cape Fear	5	84	1	3381	84	84	2895
NC	Cape Fear	6	86	1	3912	86	86	2961
NC	Cliffside	1	0	0	898	0	0	1
NC	Cliffside	2	0	0	872	0	0	1
NC	Cliffside	3	1	0	1291	1	1	21
NC	Cliffside	4	1	0	1305	1	1	17
NC	Cliffside	5	343	4	14036	342	343	11861
NC	Dan River	1	11	0	1909	11	11	363
NC	Dan River	2	10	0	2779	10	10	334
NC	Dan River	3	17	0	2792	17	17	597
NC	G G Allen	1	1	0	2427	1	1	31
NC	G G Allen	2	1	0	2813	1	1	34
NC	G G Allen	3	130	1	6120	130	130	4491
NC	G G Allen	4	93	1	5743	93	93	3207
NC	G G Allen	5	113	1	5970	112	112	3886
NC	L V Sutton	1	21	0	2051	21	21	722
NC	L V Sutton	2	35	0	2270	34	34	1193
NC	L V Sutton	3	148	2	8296	148	148	5111
NC	Lee	1	19	0	1636	19	19	649
NC	Lee	2	24	0	1685	24	24	831
NC	Lee	3	141	2	5762	140	140	4855
NC	Marshall	1	209	2	8763	208	208	7211
NC	Marshall	2	236	3	9262	235	235	8146
NC	Marshall	3	432	5	15859	431	431	14914
NC	Marshall	4	387	4	15132	386	387	13373
NC	Mayo	1A	371	4	12781	370	370	12807
NC	Mayo	1B	371	4	12781	370	370	12807
NC	Riverbend	10	34	0	2626	39	34	1174
NC	Riverbend	7	39	0	2152	36	39	1349
NC	Riverbend	8	36	0	2113	10	36	1245
NC	Riverbend	9	10	0	2267	34	10	356
NC	Roxboro	1	322	3	11085	321	321	11108
NC	Roxboro	2	570	6	19636	568	569	19676
NC	Roxboro	3A	258	3	9093	257	257	8902

Table 2 - Phase II Allowance Allocations								
			Allowances for Years 2000-2009				Years 2010 and Beyond	
State	Plant Name	Boiler1	(A) Auction Reserve Deduction	(B) Repower-ing Deduction	(C)2 Total Annual Phase II	(D) 1993-1998 Auction Deduction	(E) Auction Reserve Deduction	(F)3 Total Annual Phase II
NC	Roxboro	3B	258	3	9093	257	257	8902
NC	Roxboro	4A	302	3	10404	301	301	10425
NC	Roxboro	4B	302	3	10404	301	301	10425
NC	W H Weatherspoon	1	14	0	1122	13	14	467
NC	W H Weatherspoon	2	14	0	1125	14	14	473
NC	W H Weatherspoon	3	27	0	1626	27	27	937
ND	Antelope Valley	B1	346	4	11943	346	346	11968
ND	Antelope Valley	B2	323	4	11127	322	322	11151
ND	Coal Creek	1	676	8	23302	674	676	23350
ND	Coal Creek	2	615	8	21179	613	613	21226
ND	Coyote	B1	469	5	16177	468	468	16210
ND	Leland Olds	1	264	3	9102	263	264	9120
ND	Leland Olds	2	767	9	26392	765	765	26448
ND	Milton R Young	B1	376	4	12947	375	375	12973
ND	Milton R Young	B2	461	5	15880	459	460	15913
ND	R M Heskett	B2	93	1	3201	93	93	3207
ND	Stanton	1	216	2	7445	215	216	7460
ND	Stanton	10	39	0	1334	39	39	1337
OH	Acme	11	0	0	7	0	0	7
OH	Acme	13	0	0	1846	0	0	9
OH	Acme	14	0	0	2519	0	0	14
OH	Acme	15	0	0	3365	0	0	19
OH	Acme	16	59	1	2420	59	59	2030
OH	Acme	9	0	0	1	0	0	1
OH	Acme	91	23	0	2012	22	23	778
OH	Acme	92	20	0	1800	20	20	696
OH	Ashtabula	10	53	0	1795	52	52	1801
OH	Ashtabula	11	54	0	1890	54	54	1894
OH	Ashtabula	7	204	2	7218	203	204	7231
OH	Ashtabula	8	67	0	2337	67	67	2340
OH	Ashtabula	9	58	0	1990	58	58	1995
OH	Avon Lake	10	65	1	2253	65	65	2258
OH	Avon Lake	11	142	2	5023	142	142	5034
OH	Avon Lake	12	429	5	15194	428	429	15225
OH	Avon Lake	9	74	1	2566	74	74	2572
OH	Bay Shore	1	137	1	4718	136	137	4726
OH	Bay Shore	2	130	1	4494	130	130	4503
OH	Bay Shore	3	124	1	4276	124	124	4284
OH	Bay Shore	4	204	2	7036	204	204	7050
OH	Cardinal	1	418	5	14773	416	417	14803
OH	Cardinal	2	467	5	16521	466	466	16554
OH	Cardinal	3	485	5	17296	484	484	16747
OH	Cardinal/Tidd	**1	21	0	714	21	21	715
OH	Conesville	1	51	1	1813	51	51	1817
OH	Conesville	2	60	1	2109	59	60	2114

Table 2 - Phase II Allowance Allocations

State	Plant Name	Boiler1	Allowances for Years 2000-2009				Years 2010 and Beyond	
			(A) Auction Reserve Deduction	(B) Repower-ing Deduction	(C)2 Total Annual Phase II	(D) 1993-1998 Auction Deduction	(E) Auction Reserve Deduction	(F)3 Total Annual Phase II
OH	Conesville	3	67	1	2369	67	67	2373
OH	Conesville	4	594	6	21025	593	593	21067
OH	Conesville	5	208	2	9023	207	208	7179
OH	Conesville	6	230	2	9392	230	230	7951
OH	Dover	**6	4	0	153	4	4	154
OH	Eastlake	1	95	1	3365	95	95	3371
OH	Eastlake	2	105	1	3724	105	105	3732
OH	Eastlake	3	122	1	4318	122	122	4327
OH	Eastlake	4	177	2	6256	176	176	6269
OH	Eastlake	5	469	5	16600	468	468	16633
OH	Edgewater	11	25	0	878	25	12	422
OH	Edgewater	12	27	0	947	27	13	455
OH	Edgewater	13	62	1	2178	61	61	2183
OH	Gen J M Gavin	1	964	11	34088	962	963	34158
OH	Gen J M Gavin	2	982	12	34726	980	981	34797
OH	Gorge	25	43	0	1498	43	21	720
OH	Gorge	26	49	1	1676	49	23	807
OH	Hamilton	9	34	0	1665	34	34	1162
OH	J M Stuart	1	569	6	19626	568	568	19666
OH	J M Stuart	2	540	6	18605	538	539	18643
OH	J M Stuart	3	535	6	18448	534	534	18486
OH	J M Stuart	4	566	6	19497	564	565	19537
OH	Killen Station	2	491	5	16923	490	490	16958
OH	Kyger Creek	1	235	3	8097	234	235	8114
OH	Kyger Creek	2	226	2	7795	226	226	7810
OH	Kyger Creek	3	218	2	7522	218	218	7536
OH	Kyger Creek	4	228	2	7858	227	228	7873
OH	Kyger Creek	5	228	2	7872	228	228	7887
OH	Lake Road	6	0	0	1340	0	0	0
OH	Lake Shore	18	145	2	6031	145	145	5014
OH	Lake Shore	91	1	0	47	1	1	47
OH	Lake Shore	92	2	0	84	2	2	84
OH	Lake Shore	93	2	0	65	2	2	65
OH	Lake Shore	94	3	0	107	3	3	107
OH	Miami Fort	5-1	4	0	144	4	4	143
OH	Miami Fort	5-2	4	0	144	4	4	143
OH	Miami Fort	6	139	2	4906	138	138	4917
OH	Miami Fort	7	469	5	16602	468	468	16635
OH	Miami Fort	8	529	6	18227	527	528	18264
OH	Muskingum River	1	181	2	6412	181	181	6425
OH	Muskingum River	2	173	2	6106	172	172	6119
OH	Muskingum River	3	170	2	6016	170	170	6027
OH	Muskingum River	4	143	2	5078	143	143	5088
OH	Muskingum River	5	493	5	17445	492	492	17479
OH	Niles	1	85	1	2994	84	84	3000

Table 2 - Phase II Allowance Allocations

State	Plant Name	Boiler1	Allowances for Years 2000-2009				Years 2010 and Beyond	
			(A) Auction Reserve Deduction	(B) Repower-ing Deduction	(C)2 Total Annual Phase II	(D) 1993-1998 Auction Deduction	(E) Auction Reserve Deduction	(F)3 Total Annual Phase II
OH	Niles	2	111	1	3923	111	111	3930
OH	O H Hutchings	H-1	11	0	1736	11	11	398
OH	O H Hutchings	H-2	9	0	1671	9	9	309
OH	O H Hutchings	H-3	17	0	1603	17	17	585
OH	O H Hutchings	H-4	19	0	1623	19	19	641
OH	O H Hutchings	H-5	15	0	1630	15	15	514
OH	O H Hutchings	H-6	11	0	1660	11	11	371
OH	Picway	9	60	1	2127	60	60	2131
OH	Poston	1	23	0	787	23	23	789
OH	Poston	2	21	0	731	21	21	733
OH	Poston	3	28	0	957	28	28	958
OH	R E Burger	1	36	0	1233	36	17	593
OH	R E Burger	2	35	0	1206	35	17	579
OH	R E Burger	3	36	0	1246	36	17	599
OH	R E Burger	4	37	0	1275	37	18	613
OH	R E Burger	5	38	0	1327	37	37	1331
OH	R E Burger	6	37	0	1325	37	37	1327
OH	R E Burger	7	131	1	4647	131	131	4656
OH	R E Burger	8	151	2	5359	151	151	5370
OH	Refuse & Coal	001	12	0	426	12	12	426
OH	Refuse & Coal	002	12	0	381	12	12	381
OH	Refuse & Coal	003	12	0	402	12	12	402
OH	Refuse & Coal	004	12	0	438	12	12	441
OH	Refuse & Coal	005	12	0	375	12	12	375
OH	Refuse & Coal	006	12	0	366	12	12	363
OH	Richard H Gorsuch	1	178	2	6150	178	178	6162
OH	Richard H Gorsuch	2	146	2	5062	146	146	5072
OH	Richard H Gorsuch	3	200	2	6878	198	200	6892
OH	Richard H Gorsuch	4	40	0	1404	40	40	1404
OH	Toronto	10	97	0	3343	97	47	1608
OH	Toronto	11	105	0	3612	105	49	1738
OH	Toronto	9	54	0	1873	54	26	900
OH	W H Sammis	1	181	2	6237	180	181	6250
OH	W H Sammis	2	159	2	5470	158	158	5482
OH	W H Sammis	3	181	2	6236	180	181	6249
OH	W H Sammis	4	160	2	5527	160	160	5538
OH	W H Sammis	5	294	3	10419	294	294	10439
OH	W H Sammis	6	564	6	19947	562	563	19987
OH	W H Sammis	7	527	6	18633	525	526	18670
OH	W H Zimmer	1	468	5	16149	467	468	16181
OH	Walter C Beckjord	1	14	0	1834	14	14	472
OH	Walter C Beckjord	2	21	0	1859	21	21	711
OH	Walter C Beckjord	3	31	0	2530	31	31	1077
OH	Walter C Beckjord	4	62	1	3261	62	62	2141
OH	Walter C Beckjord	5	109	1	3857	109	109	3864

Table 2 - Phase II Allowance Allocations

State	Plant Name	Boiler1	Allowances for Years 2000-2009				Years 2010 and Beyond	
			(A) Auction Reserve Deduction	(B) Repower-ing Deduction	(C)2 Total Annual Phase II	(D) 1993-1998 Auction Deduction	(E) Auction Reserve Deduction	(F)3 Total Annual Phase II
OH	Walter C Beckjord	6	280	3	9922	280	280	9942
OH	Woodsdale	**GT1	9	0	294	9	9	295
OH	Woodsdale	**GT10	0	0	0	0	0	0
OH	Woodsdale	**GT11	0	0	0	0	0	0
OH	Woodsdale	**GT12	0	0	0	0	0	0
OH	Woodsdale	**GT2	9	0	294	9	9	295
OH	Woodsdale	**GT3	9	0	294	9	9	295
OH	Woodsdale	**GT4	9	0	294	9	9	295
OH	Woodsdale	**GT5	9	0	294	9	9	295
OH	Woodsdale	**GT6	9	0	294	9	9	295
OH	Woodsdale	**GT7	0	0	0	0	0	0
OH	Woodsdale	**GT8	0	0	0	0	0	0
OH	Woodsdale	**GT9	0	0	0	0	0	0
OK	Anadarko	3	0	0	0	0	0	1
OK	Arbuckle	ARB	0	0	45	0	1	50
OK	Comanche	7251	0	0	333	0	4	144
OK	Comanche	7252	0	0	2	0	4	144
OK	Conoco	**1	6	0	222	6	6	222
OK	Conoco	**2	6	0	222	6	6	222
OK	GRDA	1	405	4	14638	403	404	13973
OK	GRDA	2	242	3	8393	242	242	8372
OK	Horseshoe Lake	6	0	0	173	0	5	160
OK	Horseshoe Lake	7	0	0	231	0	6	207
OK	Horseshoe Lake	8	0	0	313	0	10	358
OK	Hugo	1	332	4	11873	331	332	11475
OK	Mooreland	1	0	0	0	0	0	1
OK	Mooreland	2	0	0	44	0	2	57
OK	Mooreland	3	0	0	7	0	0	17
OK	Muskogee	3	0	0	141	0	4	137
OK	Muskogee	4	257	3	9308	256	257	8880
OK	Muskogee	5	227	2	8275	226	226	7835
OK	Muskogee	6	403	4	14421	402	403	13931
OK	Mustang	1	0	0	32	0	1	26
OK	Mustang	2	0	0	26	0	1	25
OK	Mustang	3	0	0	1	0	2	81
OK	Mustang	4	0	0	163	0	6	191
OK	NA 1 -- 5030	**1	0	0	0	0	0	0
OK	NA 1 -- 5030	**2	0	0	0	0	0	0
OK	NA 1 -- 5030	**3	0	0	0	0	0	0
OK	Northeastern	3301	48	1	1741	48	48	1646
OK	Northeastern	3302	161	2	5933	161	161	5578
OK	Northeastern	3313	384	4	13829	383	383	13249
OK	Northeastern	3314	415	5	14879	414	414	14337
OK	Ponca	2	0	0	0	0	0	0
OK	Riverside	1501	0	0	519	0	12	417

Table 2 - Phase II Allowance Allocations

State	Plant Name	Boiler1	Allowances for Years 2000-2009				Years 2010 and Beyond	
			(A) Auction Reserve Deduction	(B) Repower-ing Deduction	(C)2 Total Annual Phase II	(D) 1993-1998 Auction Deduction	(E) Auction Reserve Deduction	(F)3 Total Annual Phase II
OK	Riverside	1502	0	0	285	0	10	335
OK	Seminole	1	0	0	412	0	11	383
OK	Seminole	2	0	0	453	0	12	432
OK	Seminole	3	1	0	494	1	15	505
OK	Sooner	1	288	3	10468	287	287	9938
OK	Sooner	2	274	3	9976	273	273	9451
OK	Southwestern	8002	0	0	15	0	1	17
OK	Southwestern	8003	0	0	164	0	5	165
OK	Southwestern	801N	0	0	3	0	0	5
OK	Southwestern	801S	0	0	0	0	0	3
OK	Tulsa	1402	0	0	98	0	1	45
OK	Tulsa	1403	0	0	4	0	0	3
OK	Tulsa	1404	0	0	58	0	2	64
OR	Boardman	1SG	388	4	13373	387	387	13401
PA	Armstrong	1	176	2	6213	175	175	6226
PA	Armstrong	2	188	2	6652	188	188	6665
PA	Bruce Mansfield	1	369	4	12713	368	368	12740
PA	Bruce Mansfield	2	408	4	14065	407	407	14094
PA	Bruce Mansfield	3	420	5	14468	419	419	14498
PA	Brunner Island	1	338	4	11968	337	338	11992
PA	Brunner Island	2	379	4	13410	378	378	13437
PA	Brunner Island	3	656	8	23201	654	655	23250
PA	Cheswick	1	477	5	16886	476	476	16919
PA	Conemaugh	1	734	9	25929	732	733	25982
PA	Conemaugh	2	813	10	28742	811	812	28800
PA	Cromby	1	64	1	2202	64	64	2207
PA	Cromby	2	61	1	2109	61	61	2114
PA	Delaware	71	22	0	743	22	22	745
PA	Delaware	81	16	0	537	16	16	538
PA	Eddystone	1	74	1	2844	74	74	2560
PA	Eddystone	2	73	1	3004	72	72	2504
PA	Eddystone	3	55	1	1894	55	55	1899
PA	Eddystone	4	58	1	2010	58	58	2015
PA	Elrama	1	21	0	1650	21	21	711
PA	Elrama	2	19	0	1616	19	19	662
PA	Elrama	3	44	0	1568	44	44	1528
PA	Elrama	4	75	1	2579	75	75	2584
PA	F R Phillips	1	3	0	663	3	3	145
PA	F R Phillips	2	3	0	504	3	3	110
PA	F R Phillips	3	8	0	1165	8	8	253
PA	F R Phillips	4	7	0	1112	7	7	242
PA	F R Phillips	5	7	0	1131	7	7	247
PA	F R Phillips	6	32	0	2022	32	32	1109
PA	Front Street	10	36	0	1176	36	36	1176
PA	Front Street	7	9	0	294	9	9	295

Table 2 - Phase II Allowance Allocations

State	Plant Name	Boiler1	Allowances for Years 2000-2009				Years 2010 and Beyond	
			(A) Auction Reserve Deduction	(B) Repower-ing Deduction	(C)2 Total Annual Phase II	(D) 1993-1998 Auction Deduction	(E) Auction Reserve Deduction	(F)3 Total Annual Phase II
PA	Front Street	8	9	0	294	9	9	295
PA	Front Street	9	36	0	1176	36	36	1176
PA	Hatfield's Ferry	1	461	5	16308	460	460	16340
PA	Hatfield's Ferry	2	455	5	16089	453	454	16122
PA	Hatfield's Ferry	3	491	5	17360	489	490	17394
PA	Holtwood	17	104	1	3570	103	103	3578
PA	Homer City	1	515	6	17753	514	514	17790
PA	Homer City	2	447	5	16309	446	446	15441
PA	Homer City	3	802	10	27619	800	801	27676
PA	Hunlock Power	6	65	1	2256	65	65	2261
PA	Keystone	1	819	10	28209	817	818	28267
PA	Keystone	2	872	10	30035	870	871	30098
PA	Martins Creek	1	154	2	5455	154	154	5467
PA	Martins Creek	2	156	2	5526	156	156	5538
PA	Martins Creek	3	382	4	13179	381	382	13205
PA	Martins Creek	4	352	4	12123	351	351	12148
PA	Mitchell	1	0	0	0	0	0	0
PA	Mitchell	2	0	0	1	0	0	1
PA	Mitchell	3	0	0	0	0	0	0
PA	Mitchell	33	90	1	3528	90	90	3103
PA	Montour	1	696	9	24182	693	695	24018
PA	Montour	2	717	9	24671	714	716	24723
PA	New Castle	1	37	0	1292	37	18	621
PA	New Castle	2	41	0	1439	41	20	692
PA	New Castle	3	82	1	2842	82	82	2848
PA	New Castle	4	75	1	2816	75	75	2607
PA	New Castle	5	131	1	4513	131	131	4522
PA	Portland	1	72	1	2559	72	72	2565
PA	Portland	2	125	1	4412	124	124	4421
PA	Schuykill	1	17	0	572	17	17	573
PA	Seward	12	32	0	1096	32	32	1098
PA	Seward	14	32	0	1096	32	32	1098
PA	Seward	15	145	2	5000	145	145	5010
PA	Shawville	1	125	1	4429	125	125	4437
PA	Shawville	2	126	1	4455	126	126	4463
PA	Shawville	3	173	2	6109	172	172	6122
PA	Shawville	4	171	2	6068	171	171	6081
PA	Springdale	77	0	0	0	0	0	0
PA	Springdale	88	0	0	0	0	0	0
PA	Sunbury	1A	52	0	1818	52	52	1822
PA	Sunbury	1B	52	0	1817	52	52	1821
PA	Sunbury	2A	52	0	1818	52	52	1822
PA	Sunbury	2B	52	0	1818	52	52	1822
PA	Sunbury	3	115	1	4028	115	115	4036
PA	Sunbury	4	148	2	5248	148	148	5259

Table 2 - Phase II Allowance Allocations								
			Allowances for Years 2000-2009				Years 2010 and Beyond	
State	Plant Name	Boiler1	(A) Auction Reserve Deduction	(B) Repower-ing Deduction	(C)2 Total Annual Phase II	(D) 1993-1998 Auction Deduction	(E) Auction Reserve Deduction	(F)3 Total Annual Phase II
PA	Titus	1	55	1	2149	55	55	1901
PA	Titus	2	63	1	2271	63	63	2179
PA	Titus	3	58	1	2194	58	58	1994
PA	Warren	1	21	0	720	21	21	721
PA	Warren	2	21	0	720	21	21	721
PA	Warren	3	21	0	740	21	21	741
PA	Warren	4	21	0	740	21	21	741
PA	Williamsburg	11	27	0	935	27	27	936
RI	Manchester Street	12	14	0	512	14	14	485
RI	Manchester Street	6	19	0	693	19	19	657
RI	Manchester Street	7	13	0	458	13	13	435
RI	South Street	121	30	0	1086	30	30	1048
RI	South Street	122	28	0	946	28	28	950
SC	Canadys Steam	CAN1	85	1	3247	85	85	2937
SC	Canadys Steam	CAN2	67	1	2978	67	67	2309
SC	Canadys Steam	CAN3	90	1	4222	90	90	3105
SC	Cope Station	COP1	76	1	2615	76	76	2620
SC	Cross	1	162	2	5601	162	162	5612
SC	Cross	2	259	3	8938	259	259	8956
SC	Dolphus M Grainger	1	90	1	3113	90	90	3119
SC	Dolphus M Grainger	2	8	0	277	8	8	277
SC	H B Robinson	1	84	1	3814	84	84	2908
SC	Hagood	HAG1	0	0	3	0	0	3
SC	Hagood	HAG2	0	0	451	0	0	2
SC	Hagood	HAG3	0	0	787	0	0	6
SC	Hagood	HAG4	28	0	948	27	27	951
SC	Jefferies	1	0	0	0	0	0	0
SC	Jefferies	2	0	0	1	0	0	1
SC	Jefferies	3	98	1	3885	98	98	3378
SC	Jefferies	4	91	1	3742	91	91	3155
SC	McMeekin	MCM1	118	1	4079	118	118	4087
SC	McMeekin	MCM2	117	1	4037	117	117	4045
SC	NA 1 – 7106	**GT1	0	0	0	0	0	0
SC	Urquhart	URQ1	64	1	2194	64	64	2199
SC	Urquhart	URQ2	49	1	1926	49	49	1685
SC	Urquhart	URQ3	84	1	2913	84	84	2919
SC	W S Lee	1	26	0	2133	26	26	900
SC	W S Lee	2	33	0	2277	33	33	1132
SC	W S Lee	3	51	1	3443	51	51	1773
SC	Wateree	WAT1	282	3	9714	281	281	9735
SC	Wateree	WAT2	261	3	9267	261	261	9022
SC	Williams	WIL1	459	5	15816	458	458	15849
SC	Winyah	1	220	2	7572	219	219	7588
SC	Winyah	2	148	2	6232	148	148	5128
SC	Winyah	3	73	1	3609	72	73	2508

Table 2 - Phase II Allowance Allocations

State	Plant Name	Boiler1	Allowances for Years 2000-2009				Years 2010 and Beyond	
			(A) Auction Reserve Deduction	(B) Repower-ing Deduction	(C)2 Total Annual Phase II	(D) 1993-1998 Auction Deduction	(E) Auction Reserve Deduction	(F)3 Total Annual Phase II
SC	Winyah	4	99	1	3426	99	99	3433
SD	Angus Anson Site	2	25	0	851	25	25	853
SD	Angus Anson Site	3	30	0	1020	30	30	1022
SD	Big Stone	1	376	4	13711	375	375	12973
SD	Huron	**2A	2	0	80	2	2	80
SD	Huron	**2B	3	0	103	3	3	103
SD	Pathfinder	11	0	0	11	0	0	11
SD	Pathfinder	12	0	0	2	0	0	2
SD	Pathfinder	13	0	0	2	0	0	2
TN	Allen	1	187	2	6606	186	186	6619
TN	Allen	2	204	2	7229	204	204	7243
TN	Allen	3	191	2	6754	190	191	6767
TN	Bull Run	1	727	9	25038	725	726	25090
TN	Cumberland	1	1057	12	37374	1054	1055	37451
TN	Cumberland	2	1156	14	40882	1153	1154	40967
TN	Gallatin	1	215	2	7603	214	214	7618
TN	Gallatin	2	211	2	7462	210	211	7476
TN	Gallatin	3	244	3	8632	243	244	8649
TN	Gallatin	4	259	3	9165	258	259	9183
TN	John Sevier	1	184	2	6359	184	184	6372
TN	John Sevier	2	184	2	6356	184	184	6369
TN	John Sevier	3	189	2	6517	189	189	6531
TN	John Sevier	4	193	2	6667	193	193	6680
TN	Johnsonville	1	95	1	3357	95	95	3364
TN	Johnsonville	10	92	1	3255	92	92	3262
TN	Johnsonville	2	98	1	3464	98	98	3471
TN	Johnsonville	3	102	1	3627	102	102	3633
TN	Johnsonville	4	97	1	3442	97	97	3449
TN	Johnsonville	5	100	1	3552	100	100	3558
TN	Johnsonville	6	96	1	3403	96	96	3410
TN	Johnsonville	7	109	1	3870	109	109	3878
TN	Johnsonville	8	106	1	3752	106	106	3759
TN	Johnsonville	9	86	1	3051	86	86	3057
TN	Kingston	1	120	1	4151	120	120	4158
TN	Kingston	2	115	1	3991	115	115	3966
TN	Kingston	3	138	1	4750	137	138	4760
TN	Kingston	4	146	2	5039	146	146	5050
TN	Kingston	5	180	2	6192	179	179	6206
TN	Kingston	6	184	2	6345	184	184	6358
TN	Kingston	7	179	2	6187	179	179	6200
TN	Kingston	8	168	2	5782	167	167	5794
TN	Kingston	9	186	2	6403	185	185	6417
TN	Watts Bar	A	0	0	0	0	0	0
TN	Watts Bar	B	0	0	0	0	0	0
TN	Watts Bar	C	0	0	0	0	0	0

Table 2 - Phase II Allowance Allocations

State	Plant Name	Boiler1	Allowances for Years 2000-2009				Years 2010 and Beyond	
			(A) Auction Reserve Deduction	(B) Repower-ing Deduction	(C)2 Total Annual Phase II	(D) 1993-1998 Auction Deduction	(E) Auction Reserve Deduction	(F)3 Total Annual Phase II
TN	Watts Bar	D	0	0	0	0	0	0
TX	Barney M Davis	1	1	0	496	1	12	412
TX	Barney M Davis	2	1	0	398	1	11	384
TX	Big Brown	1	584	6	20979	582	583	20161
TX	Big Brown	2	558	6	19872	557	557	19286
TX	Bryan	6	0	0	19	0	1	22
TX	C E Newman	BW5	0	0	3	0	0	4
TX	Cedar Bayou	CBY1	0	0	814	0	20	702
TX	Cedar Bayou	CBY2	0	0	921	0	25	857
TX	Cedar Bayou	CBY3	0	0	725	0	20	707
TX	Coleto Creek	**2	0	0	0	0	0	0
TX	Coleto Creek	1	400	4	14717	399	399	13807
TX	Collin	1	1	0	92	1	3	94
TX	Concho	7	0	0	11	0	0	13
TX	Dallas	3	0	0	27	0	1	23
TX	Dallas	9	0	0	26	0	1	25
TX	Dansby	1	1	0	94	1	3	106
TX	Decker Creek	1	0	0	128	0	4	150
TX	Decker Creek	2	0	0	195	0	5	181
TX	Decordova	1	1	0	1018	1	25	881
TX	Deepwater	DWP9	0	0	28	0	1	37
TX	E S Joslin	1	0	0	260	0	6	210
TX	Eagle Mountain	1	0	0	52	0	1	43
TX	Eagle Mountain	2	1	0	140	1	3	116
TX	Eagle Mountain	3	0	0	100	0	3	109
TX	Forest Grove	**1	0	0	0	0	0	0
TX	Fort Phantom	1	0	0	126	0	4	129
TX	Fort Phantom	2	1	0	187	1	6	192
TX	Generic Station	**1	0	0	0	0	0	0
TX	Generic Station	**2	0	0	0	0	0	0
TX	Gibbons Creek	1	403	4	14410	401	402	13904
TX	Graham	1	0	0	235	0	6	194
TX	Graham	2	1	0	496	1	12	406
TX	Greens Bayou	GBY1	0	0	1	0	0	3
TX	Greens Bayou	GBY2	0	0	2	0	0	3
TX	Greens Bayou	GBY3	0	0	15	0	0	6
TX	Greens Bayou	GBY4	0	0	19	0	0	8
TX	Greens Bayou	GBY5	1	0	352	1	9	308
TX	Handley	1A	0	0	7	0	0	3
TX	Handley	1B	0	0	0	0	0	3
TX	Handley	2	0	0	21	0	0	15
TX	Handley	3	1	0	423	1	11	393
TX	Handley	4	0	0	118	0	3	112
TX	Handley	5	1	0	136	1	4	127
TX	Harrington Station	061B	223	2	8232	223	223	7711

Table 2 - Phase II Allowance Allocations

State	Plant Name	Boiler1	Allowances for Years 2000-2009				Years 2010 and Beyond	
			(A) Auction Reserve Deduction	(B) Repower-ing Deduction	(C)2 Total Annual Phase II	(D) 1993-1998 Auction Deduction	(E) Auction Reserve Deduction	(F)3 Total Annual Phase II
TX	Harrington Station	062B	237	3	8718	237	237	8197
TX	Harrington Station	063B	253	3	9266	252	253	8741
TX	Hiram Clarke	HOC1	0	0	0	0	0	0
TX	Hiram Clarke	HOC2	0	0	0	0	0	0
TX	Hiram Clarke	HOC3	0	0	3	0	0	2
TX	Hiram Clarke	HOC4	0	0	2	0	0	1
TX	Holly Ave	1	0	0	59	0	2	71
TX	Holly Ave	2	0	0	71	0	2	76
TX	Holly Street	1	0	0	49	0	0	17
TX	Holly Street	2	0	0	31	0	1	18
TX	Holly Street	3	0	0	68	0	2	66
TX	Holly Street	4	0	0	43	0	2	82
TX	J K Spruce	**2	0	0	0	0	0	0
TX	J K Spruce	BLR1	194	2	6690	194	194	6703
TX	J L Bates	1	0	0	48	0	1	46
TX	J L Bates	2	0	0	124	0	3	101
TX	J T Deely	1	364	4	13132	363	363	12571
TX	J T Deely	2	380	4	13701	379	379	13113
TX	Jones Station	151B	0	0	125	0	2	74
TX	Jones Station	152B	0	0	93	0	2	67
TX	Knox Lee	2	0	0	0	0	0	0
TX	Knox Lee	3	0	0	5	0	0	2
TX	Knox Lee	4	0	0	29	0	0	13
TX	Knox Lee	5	0	0	251	0	4	149
TX	La Palma	7	0	0	178	0	4	153
TX	Lake Creek	1	0	0	39	0	1	29
TX	Lake Creek	2	0	0	191	0	4	141
TX	Lake Hubbard	1	1	0	170	1	6	201
TX	Lake Hubbard	2	2	0	604	2	17	578
TX	Laredo	1	0	0	15	0	0	16
TX	Laredo	2	0	0	14	0	0	14
TX	Laredo	3	0	0	85	0	3	116
TX	Leon Creek	3	0	0	2	0	0	2
TX	Leon Creek	4	0	0	10	0	0	8
TX	Lewis Creek	1	0	0	317	0	8	263
TX	Lewis Creek	2	0	0	271	0	7	257
TX	Limesetone	LIM1	687	8	23779	685	687	23725
TX	Limesetone	LIM2	411	4	14154	409	410	14182
TX	Lon C Hill	1	0	0	9	0	0	7
TX	Lon C Hill	2	0	0	10	0	0	7
TX	Lon C Hill	3	0	0	179	0	3	91
TX	Lon C Hill	4	0	0	197	0	7	238
TX	Lone Star	1	0	0	0	0	0	10
TX	Malakoff	**1	45	0	1539	45	45	1542
TX	Malakoff	**2	0	0	0	0	0	0

Table 2 - Phase II Allowance Allocations

State	Plant Name	Boiler1	Allowances for Years 2000-2009				Years 2010 and Beyond	
			(A) Auction Reserve Deduction	(B) Repower-ing Deduction	(C)2 Total Annual Phase II	(D) 1993-1998 Auction Deduction	(E) Auction Reserve Deduction	(F)3 Total Annual Phase II
TX	Martin Lake	1	933	11	33220	931	932	32202
TX	Martin Lake	2	905	11	32255	903	903	31222
TX	Martin Lake	3	940	11	33425	937	938	32429
TX	Mission Road	3	0	0	3	0	0	8
TX	Monticello	1	659	8	23633	657	659	22760
TX	Monticello	2	639	8	22930	637	638	22061
TX	Monticello	3	987	12	35220	984	985	34043
TX	Morgan Creek	3	0	0	8	0	0	6
TX	Morgan Creek	4	0	0	72	0	2	56
TX	Morgan Creek	5	0	0	154	0	5	164
TX	Morgan Creek	6	6	0	836	6	22	777
TX	Mountain Creek	2	0	0	4	0	0	3
TX	Mountain Creek	3A	0	0	11	0	0	5
TX	Mountain Creek	3B	0	0	2	0	0	5
TX	Mountain Creek	6	1	0	63	1	2	74
TX	Mountain Creek	7	0	0	62	0	2	58
TX	Mountain Creek	8	1	0	527	1	15	535
TX	NA 1 -- 7219	**1	0	0	0	0	0	0
TX	NA 1 -- 7219	**2	0	0	0	0	0	0
TX	NA 2 -- 4274	**NA1	0	0	0	0	0	0
TX	Neches	11	0	0	0	0	0	0
TX	Neches	13	0	0	0	0	0	0
TX	Neches	15	0	0	0	0	0	0
TX	Neches	18	0	0	0	0	0	0
TX	Newman	1	0	0	14	0	1	18
TX	Newman	2	0	0	29	0	1	41
TX	Newman	3	0	0	88	0	3	94
TX	Newman	HRSG1	0	0	99	0	4	138
TX	Nichols Station	141B	0	0	77	0	2	82
TX	Nichols Station	142B	0	0	86	0	2	76
TX	Nichols Station	143B	0	0	50	0	1	31
TX	North Lake	1	1	0	131	1	4	129
TX	North Lake	2	1	0	150	1	4	141
TX	North Lake	3	2	0	294	2	7	255
TX	North Main	4	0	0	42	0	1	35
TX	North Texas	3	0	0	13	0	0	8
TX	Nueces Bay	5	0	0	1	0	0	1
TX	Nueces Bay	6	0	0	140	0	3	114
TX	Nueces Bay	7	0	0	496	0	12	431
TX	O W Sommers	1	2	0	478	2	14	477
TX	O W Sommers	2	0	0	188	0	9	322
TX	Oak Creek	1	0	0	106	0	3	107
TX	Oklaunion	1	228	2	7857	227	228	7872
TX	P H Robinson	PHR1	0	0	645	0	13	435
TX	P H Robinson	PHR2	0	0	494	0	14	491

Table 2 - Phase II Allowance Allocations

State	Plant Name	Boiler1	Allowances for Years 2000-2009				Years 2010 and Beyond	
			(A) Auction Reserve Deduction	(B) Repower-ing Deduction	(C)2 Total Annual Phase II	(D) 1993-1998 Auction Deduction	(E) Auction Reserve Deduction	(F)3 Total Annual Phase II
TX	P H Robinson	PHR3	0	0	685	0	15	506
TX	P H Robinson	PHR4	0	0	796	0	18	620
TX	Paint Creek	1	0	0	11	0	0	10
TX	Paint Creek	2	0	0	11	0	0	11
TX	Paint Creek	3	1	0	28	1	2	53
TX	Paint Creek	4	0	0	105	0	3	103
TX	Parkdale	1	0	0	34	0	1	36
TX	Parkdale	2	0	0	62	0	2	66
TX	Parkdale	3	1	0	61	1	2	76
TX	Permian Basin	5	0	0	103	0	3	105
TX	Permian Basin	6	8	0	804	8	24	828
TX	Pirkey	1	574	6	20526	572	573	19809
TX	Plant X	111B	0	0	0	0	0	0
TX	Plant X	112B	0	0	2	0	0	1
TX	Plant X	113B	0	0	89	0	1	30
TX	Plant X	114B	0	0	0	0	0	3
TX	Powerlane Plant	2	13	0	459	13	14	467
TX	Powerlane Plant	3	1	0	37	1	1	38
TX	R W Miller	**4	25	0	851	25	25	853
TX	R W Miller	**5	25	0	851	25	25	853
TX	R W Miller	1	0	0	55	0	2	54
TX	R W Miller	2	0	0	98	0	3	98
TX	R W Miller	3	0	0	218	0	5	181
TX	Ray Olinger	BW2	0	0	60	0	2	52
TX	Ray Olinger	BW3	0	0	79	0	2	86
TX	Ray Olinger	CE1	0	0	42	0	1	33
TX	Rio Pecos	5	0	0	64	0	2	69
TX	Rio Pecos	6	0	0	179	0	5	172
TX	River Crest	1	1	0	61	1	2	70
TX	Sabine	1	0	0	152	0	6	204
TX	Sabine	2	0	0	164	0	6	197
TX	Sabine	3	0	0	576	0	15	503
TX	Sabine	4	0	0	504	0	18	626
TX	Sabine	5	0	0	323	0	11	392
TX	Sam Bertron	SRB1	0	0	57	0	1	49
TX	Sam Bertron	SRB2	0	0	18	0	1	33
TX	Sam Bertron	SRB3	0	0	120	0	3	90
TX	Sam Bertron	SRB4	0	0	79	0	2	79
TX	Sam Seymour	1	437	5	15905	436	436	15087
TX	Sam Seymour	2	476	5	17391	475	475	16435
TX	Sam Seymour	3	304	3	10491	304	304	10513
TX	San Angelo	2	0	0	161	0	5	164
TX	San Miguel	SM-1	482	5	17211	481	481	16651
TX	Sandow	4	722	9	25689	719	721	24915
TX	Seaholm	9	0	0	4	0	0	3

Table 2 - Phase II Allowance Allocations

State	Plant Name	Boiler1	Allowances for Years 2000-2009				Years 2010 and Beyond	
			(A) Auction Reserve Deduction	(B) Repower-ing Deduction	(C)2 Total Annual Phase II	(D) 1993-1998 Auction Deduction	(E) Auction Reserve Deduction	(F)3 Total Annual Phase II
TX	Sim Gideon	1	0	0	47	0	1	51
TX	Sim Gideon	2	0	0	56	0	2	58
TX	Sim Gideon	3	0	0	277	0	9	321
TX	Spencer	4	0	0	19	0	1	17
TX	Spencer	5	0	0	23	0	1	22
TX	Stryker Creek	1	0	0	170	0	4	138
TX	Stryker Creek	2	1	0	525	1	16	563
TX	T C Fergusen	1	0	0	253	0	7	254
TX	T H Wharton	THW1	0	0	7	0	0	5
TX	T H Wharton	THW2	0	0	97	0	2	82
TX	TNP One	U1	62	1	2122	61	61	2127
TX	TNP One	U2	102	1	3499	101	101	3507
TX	Tolk Station	171B	407	4	14777	406	406	14057
TX	Tolk Station	172B	403	4	14440	402	402	13925
TX	Tradinghouse	1	0	0	593	0	15	516
TX	Tradinghouse	2	1	0	995	1	26	903
TX	Trinidad	7	0	0	6	0	0	4
TX	Trinidad	8	0	0	1	0	0	3
TX	Trinidad	9	0	0	135	0	3	115
TX	Twin Oak	1	232	3	8012	232	232	8028
TX	Twin Oak	2	45	0	1540	45	45	1542
TX	V H Braunig	1	0	0	78	0	4	122
TX	V H Braunig	2	0	0	121	0	4	140
TX	V H Braunig	3	0	0	416	0	11	392
TX	Valley	1	0	0	77	0	3	97
TX	Valley	2	1	0	518	1	16	540
TX	Valley	3	0	0	124	0	4	129
TX	Victoria	5	0	0	6	0	0	6
TX	Victoria	6	0	0	8	0	0	4
TX	Victoria	7	0	0	110	0	3	102
TX	Victoria	8	0	0	238	0	6	224
TX	W A Parish	WAP1	0	0	57	0	1	51
TX	W A Parish	WAP2	0	0	56	0	1	45
TX	W A Parish	WAP3	0	0	245	0	5	158
TX	W A Parish	WAP4	0	0	558	0	15	511
TX	W A Parish	WAP5	634	8	22870	632	632	21881
TX	W A Parish	WAP6	573	6	20755	572	572	19803
TX	W A Parish	WAP7	416	5	15137	415	415	14365
TX	W A Parish	WAP8	186	2	7285	185	186	6421
TX	W B Tuttle	1	0	0	2	0	0	3
TX	W B Tuttle	2	0	0	19	0	1	17
TX	W B Tuttle	3	0	0	11	0	0	14
TX	W B Tuttle	4	0	0	48	0	2	52
TX	Webster	WEB1	0	0	14	0	0	5
TX	Webster	WEB2	0	0	17	0	0	7

Table 2 - Phase II Allowance Allocations

State	Plant Name	Boiler1	Allowances for Years 2000-2009				Years 2010 and Beyond	
			(A) Auction Reserve Deduction	(B) Repower-ing Deduction	(C)2 Total Annual Phase II	(D) 1993-1998 Auction Deduction	(E) Auction Reserve Deduction	(F)3 Total Annual Phase II
TX	Webster	WEB3	0	0	343	0	9	320
TX	Welsh	1	370	4	13325	369	369	12772
TX	Welsh	2	357	4	12842	356	356	12334
TX	Welsh	3	420	5	15215	419	420	14517
TX	Willkes	1	0	0	30	0	2	58
TX	Willkes	2	0	0	118	0	3	93
TX	Willkes	3	0	0	129	0	2	74
UH	Bonanza	1-1	255	3	10782	255	255	8818
UH	Carbon	1	55	1	1912	55	55	1917
UH	Carbon	2	72	1	2498	72	72	2503
UH	Gadsby	1	1	0	24	1	1	24
UH	Gadsby	2	12	0	1690	12	12	408
UH	Gadsby	3	44	0	2265	44	44	1520
UH	Hale	1	0	0	1	0	0	1
UH	Hunter (Emery)	1	216	2	7452	216	216	7466
UH	Hunter (Emery)	2	231	3	7957	230	230	7974
UH	Hunter (Emery)	3	326	4	11250	326	326	11273
UH	Huntington	1	230	2	7923	229	229	7940
UH	Huntington	2	283	3	9750	282	282	9771
UH	Intermountain	1SGA	83	1	2874	83	83	2880
UH	Intermountain	2SGA	84	1	2894	84	84	2900
VT	J C McNeil	1	1	0	104	1	1	38
VA	Bremo Power Station	3	51	1	2028	51	51	1768
VA	Bremo Power Station	4	150	2	5158	149	149	5170
VA	Chesapeake	1	22	0	2117	22	22	764
VA	Chesapeake	2	29	0	2210	29	29	1000
VA	Chesapeake	3	132	1	4559	132	132	4567
VA	Chesapeake	4	170	2	5870	169	169	5861
VA	Chesterfield	**8A	40	0	1387	40	40	1390
VA	Chesterfield	3	54	1	2560	54	54	1856
VA	Chesterfield	4	135	1	4669	135	135	4678
VA	Chesterfield	5	266	3	9163	265	265	9182
VA	Chesterfield	6	477	5	17134	476	476	16470
VA	Clinch River	1	154	2	5346	153	153	5302
VA	Clinch River	2	177	2	6111	177	177	6123
VA	Clinch River	3	164	2	5649	163	164	5661
VA	Clover	1	85	1	2937	85	85	2943
VA	Clover	2	85	1	2937	85	85	2943
VA	East Chandler	**2	0	0	0	0	0	0
VA	Glen Lyn	51	24	0	1152	24	24	815
VA	Glen Lyn	52	23	0	1113	23	23	787
VA	Glen Lyn	6	152	2	5533	152	152	5251
VA	Possum Point	1	0	0	0	0	0	0
VA	Possum Point	2	0	0	0	0	0	0
VA	Possum Point	3	65	1	2646	65	65	2253

Table 2 - Phase II Allowance Allocations

State	Plant Name	Boiler1	Allowances for Years 2000-2009				Years 2010 and Beyond	
			(A) Auction Reserve Deduction	(B) Repower-ing Deduction	(C)2 Total Annual Phase II	(D) 1993-1998 Auction Deduction	(E) Auction Reserve Deduction	(F)3 Total Annual Phase II
VA	Possum Point	4	195	2	6723	194	195	6736
VA	Possum Point	5	126	1	4335	125	126	4343
VA	Potomac River	1	48	1	2333	48	48	1650
VA	Potomac River	2	49	1	2308	48	48	1677
VA	Potomac River	3	80	1	2755	80	80	2761
VA	Potomac River	4	88	1	3036	88	88	3043
VA	Potomac River	5	84	1	2912	84	84	2918
VA	Yorktown	1	135	1	4670	135	135	4679
VA	Yorktown	2	130	1	4673	130	130	4503
VA	Yorktown	3	183	2	6303	182	183	6316
WA	Centralia	BW21	553	6	19070	552	552	19108
WA	Centralia	BW22	590	6	20331	588	589	20373
WA	Shuffleton	1	0	0	0	0	0	0
WA	Shuffleton	2	0	0	0	0	0	0
WA	Shuffleton	3	0	0	0	0	0	0
WV	Albright	1	57	1	1973	57	57	1978
WV	Albright	2	60	1	2053	59	59	2058
WV	Albright	3	130	1	4597	130	130	4606
WV	Fort Martin	1	507	5	17930	505	506	17965
WV	Fort Martin	2	502	5	17762	501	501	17797
WV	Harrison	1	592	6	20960	591	591	21002
WV	Harrison	2	562	6	19896	561	561	19936
WV	Harrison	3	506	5	17893	504	505	17928
WV	John E Amos	1	655	8	22581	653	654	22630
WV	John E Amos	2	752	9	25890	750	751	25944
WV	John E Amos	3	1205	14	41498	1202	1203	41584
WV	Kammer	1	228	2	8080	228	228	8095
WV	Kammer	2	237	3	8387	236	237	8404
WV	Kammer	3	212	2	7497	211	211	7512
WV	Kanawha River	1	115	1	4461	115	115	3981
WV	Kanawha River	2	103	1	4290	102	102	3545
WV	Mitchell	1	536	6	18957	534	535	18995
WV	Mitchell	2	554	6	19616	553	553	19656
WV	Mountaineer (1301)	1	1023	12	35211	1020	1021	35285
WV	Mt Storm	1	533	6	18849	531	532	18887
WV	Mt Storm	2	500	5	17683	498	499	17718
WV	Mt Storm	3	517	6	18290	516	516	18327
WV	Phil Sporn	11	70	1	3129	70	70	2434
WV	Phil Sporn	21	59	1	2964	59	59	2048
WV	Phil Sporn	31	85	1	3312	85	85	2932
WV	Phil Sporn	41	67	1	3052	66	67	2302
WV	Phil Sporn	51	305	3	10614	304	304	10519
WV	Pleasants	1	511	6	17597	509	510	17633
WV	Pleasants	2	586	6	20188	584	585	20229
WV	Rivesville	7	20	0	1237	20	20	696

Table 2 - Phase II Allowance Allocations

State	Plant Name	Boiler1	Allowances for Years 2000-2009				Years 2010 and Beyond	
			(A) Auction Reserve Deduction	(B) Repower-ing Deduction	(C)2 Total Annual Phase II	(D) 1993-1998 Auction Deduction	(E) Auction Reserve Deduction	(F)3 Total Annual Phase II
WV	Rivesville	8	60	1	2528	60	60	2086
WV	Willow Island	1	28	0	1496	28	28	961
WV	Willow Island	2	117	1	4683	116	116	4029
WI	Alma	B4	35	0	1193	34	35	1194
WI	Alma	B5	55	1	1905	55	55	1910
WI	Bay Front	1	14	0	1046	14	14	512
WI	Bay Front	2	16	0	529	16	16	530
WI	Bay Front	3	0	0	0	0	0	0
WI	Bay Front	4	0	0	33	0	0	16
WI	Bay Front	5	4	0	281	4	4	135
WI	Blount Street	11	0	0	1	0	0	1
WI	Blount Street	3	0	0	6	0	0	6
WI	Blount Street	5	0	0	7	0	0	7
WI	Blount Street	6	0	0	7	0	0	7
WI	Blount Street	7	3	0	1476	3	3	101
WI	Blount Street	8	12	0	1130	12	12	415
WI	Blount Street	9	16	0	1183	16	16	555
WI	Columbia	1	449	5	15479	448	448	15512
WI	Columbia	2	254	3	8755	253	254	8772
WI	Combustion Turbine	**2	0	0	0	0	0	0
WI	Commerce	25	0	0	4	0	0	4
WI	Concord	**1	4	0	126	4	4	126
WI	Concord	**2	4	0	126	4	4	126
WI	Concord	**3	4	0	126	4	4	126
WI	Concord	**4	4	0	126	4	4	126
WI	Edgewater	3	36	0	1237	36	36	1239
WI	Edgewater	4	302	3	10393	301	301	10415
WI	Edgewater	5	332	4	11455	331	332	11479
WI	Genoa	1	233	3	8016	232	232	8034
WI	J P Madgett	B1	209	2	7434	208	209	7219
WI	Manitowoc	6	18	0	672	18	18	672
WI	Manitowoc	7	24	0	814	24	24	813
WI	Manitowoc	8	7	0	238	7	7	238
WI	NA 1 – 7205	**1	0	0	0	0	0	0
WI	NA 1 – 7205	**2	0	0	0	0	0	0
WI	NA 1 – 7205	**3	0	0	0	0	0	0
WI	NA3	**1	0	0	0	0	0	0
WI	NA4	**1	0	0	0	0	0	0
WI	Nelson Dewey	1	73	1	2523	73	73	2528
WI	Nelson Dewey	2	81	1	2807	81	81	2813
WI	North Oak Creek	1	61	1	2118	61	61	2122
WI	North Oak Creek	2	60	1	2080	60	60	2084
WI	North Oak Creek	3	62	1	2129	62	62	2133
WI	North Oak Creek	4	72	1	2481	72	72	2487
WI	Paris	**1	4	0	124	4	4	124

Table 2 - Phase II Allowance Allocations								
			Allowances for Years 2000-2009				Years 2010 and Beyond	
State	Plant Name	Boiler1	(A) Auction Reserve Deduction	(B) Repower-ing Deduction	(C)2 Total Annual Phase II	(D) 1993-1998 Auction Deduction	(E) Auction Reserve Deduction	(F)3 Total Annual Phase II
WI	Paris	**2	4	0	124	4	4	124
WI	Paris	**3	4	0	124	4	4	124
WI	Paris	**4	4	0	124	4	4	124
WI	Pleasant Prairie	1	342	4	11798	341	342	11822
WI	Pleasant Prairie	2	484	5	16675	482	483	16709
WI	Port Washington	1	15	0	529	15	15	530
WI	Port Washington	2	30	0	1031	30	30	1033
WI	Port Washington	3	25	0	858	25	25	860
WI	Port Washington	4	23	0	804	23	23	806
WI	Port Washington	5	31	0	1061	31	31	1063
WI	Pulliam	3	4	0	140	4	4	139
WI	Pulliam	4	6	0	208	6	6	209
WI	Pulliam	5	18	0	607	18	18	608
WI	Pulliam	6	23	0	791	23	23	792
WI	Pulliam	7	59	1	2035	59	59	2039
WI	Pulliam	8	91	1	3152	91	91	3159
WI	Rock River	1	45	0	1560	45	45	1562
WI	Rock River	2	43	0	1482	43	43	1484
WI	South Fond du Lac	**CT1	19	0	639	18	18	640
WI	South Fond du Lac	**CT2	1	0	39	1	1	39
WI	South Fond du Lac	**CT3	1	0	39	1	1	39
WI	South Fond du Lac	**CT4	0	0	0	0	0	0
WI	South Oak Creek	5	113	1	3884	112	113	3892
WI	South Oak Creek	6	141	2	4859	141	141	4870
WI	South Oak Creek	7	189	2	6502	188	188	6516
WI	South Oak Creek	8	185	2	6390	185	185	6402
WI	Stoneman	B1	6	0	177	6	6	176
WI	Stoneman	B2	6	0	223	6	6	224
WI	Valley	1	45	0	1805	45	45	1570
WI	Valley	2	46	0	1824	46	46	1586
WI	Valley	3	42	0	1954	42	42	1453
WI	Valley	4	41	0	1900	41	41	1414
WI	West Marinette	**33	22	0	765	22	22	766
WI	Weston	1	22	0	762	22	22	764
WI	Weston	2	53	1	1809	52	52	1813
WI	Weston	3	281	3	9701	281	281	9721
WY	Dave Johnston	BW41	131	1	4705	130	131	4519
WY	Dave Johnston	BW42	127	1	4571	127	127	4396
WY	Dave Johnston	BW43	246	3	8827	246	246	8513
WY	Dave Johnston	BW44	185	2	6802	184	184	6381
WY	Jim Bridger	BW71	583	6	20907	581	582	20134
WY	Jim Bridger	BW72	571	6	20464	569	570	19712
WY	Jim Bridger	BW73	547	6	19584	545	546	18876
WY	Jim Bridger	BW74	96	1	4064	96	96	3329
WY	Laramie River	1	122	1	5112	122	122	4228

Table 2 - Phase II Allowance Allocations

State	Plant Name	Boiler1	Allowances for Years 2000-2009				Years 2010 and Beyond	
			(A) Auction Reserve Deduction	(B) Repower-ing Deduction	(C)2 Total Annual Phase II	(D) 1993-1998 Auction Deduction	(E) Auction Reserve Deduction	(F)3 Total Annual Phase II
WY	Laramie River	2	104	1	4302	104	104	3590
WY	Laramie River	3	93	1	3822	93	93	3208
WY	Naughton	1	144	2	5201	144	144	4972
WY	Naughton	2	185	2	6741	185	185	6400
WY	Naughton	3	141	2	5214	141	141	4879
WY	Wyodak	BW91	513	6	18311	512	512	17731

Footnotes:

1 "**" in the boiler identifier denotes a planned unit or a unit for which the boiler number is unavailable.

2 Column (C) is calculated as follows: Adjusted basic allowances for 2000 (not shown) - Column A - Column B - Conservation/Renewable reserve deduction (not shown) + Additional basic (section 405(a)(3)) (not shown) + Total bonus (not shown)

3 Column (F) is calculated as follows: Adjusted basic allowances for 2010 (not shown) - Column E + Additional basic (section 405(a)(3)) (not shown)

4 The allowances shown in this table assume that these units fully qualify for section 405(i)(2). If Monroe units 1 through 4 do not qualify, instead of the allowances listed above, Anclote units 1 and 2 and Monroe units 1 through 4 will receive the following allocations:

Plant	Boiler	Column A	Column B	Col. C	Column D	Column E	Column F
Anclote	1	323	4	13887	297	323	11165
Anclote	2	343	4	13892	314	342	11839
Monroe	1	686	8	23660	690	686	23708
Monroe	2	707	8	24298	716	705	24350
Monroe	3	660	8	22763	670	660	22810
Monroe	4	716	9	24608	737	714	24664

(3) The owner of each unit listed in the following table shall surrender, for each allowance listed in Column A or B of such table, an allowance of the same or earlier compliance use date and shall return to the Administrator any proceeds received from allowances withheld from the unit, as listed in Column C of such table. The allowances shall be surrendered and the proceeds shall be returned by December 28, 1998.

State	Plant name	Unit	Allowances for 2000 through 2009 column (A)	Allowances for 2010 and thereafter column (B)	Proceeds
CA	El Centro	2	285	272	$2749.48
CO	Valmont	11	4	0	0
FL	Lauderdale	PFL4	776	781	7904.74
FL	Lauderdale	PFL5	796	802	7904.74
LA	R S Nelson	1	30	34	0
LA	R S Nelson	2	33	32	0
MD	R P Smith	9	0	56	687.37
NM	Maddox	**3	85	85	687.37
SD	Mobile	**2	17	17	0
VA	Chesterfield	**8B	409	411	4124.21
WI	Blount Street	7	0	13	343.68
WI	Blount Street	8	0	294	3093.16
WI	Blount Street	9	0	355	3436.84

[58 FR 3687, Jan. 11, 1993, as amended at 58 FR 15650, Mar. 23, 1993; 58 FR 33770, June 21, 1993; 58 FR 40747, July 30, 1993; 62 FR 55486, Oct. 24, 1997; 63 FR 51714, Sept. 28, 1998; 70 FR 25335, May 12, 2005]

§ 73.11 [Reserved]

§ 73.12 Rounding Procedures.

(a) *Calculation rounding*. All allowances under this part and part 72 of this chapter shall be allocated as whole allowances. All calculations for such allowances shall be rounded down for decimals less than 0.500 and up for decimals of 0.500 or greater.

(b) [Reserved]

[58 FR 3687, Jan. 11, 1993, as amended at 63 FR 51765, Sept. 28, 1998]

§ 73.13 Procedures for submittals.

(a) *Address for submittal*. All submittals under this subpart shall be made by the designated representative to the Director, Acid Rain Division, (6204J), 1200 Pennsylvania Ave., NW., Washington, DC 20460 and shall meet the requirements specified in 40 CFR 72.21.

(b) *Appeals procedures*. The designated representative may appeal the decision as to eligibility or allocation of allowances under §§ 73.18, 73.19, and 73.20, using the appeals procedures of part 78 of this chapter.

[58 FR 15708, Mar. 23, 1993 as amended at 63 FR 51765, Sept. 28, 1998]

§§ 73.14–73.17 [Reserved]

§ 73.18 Submittal procedures for units commencing commercial operation during the period from January 1, 1993, through December 31, 1995.

(a) *Eligibility*. To be eligible for allowances under this section, a unit shall commence commercial operation between January 1, 1993, and December 31, 1995, and have commenced construction before December 31, 1990.

(b) *Application for allowances*. No later than December 31, 1995, the designated representative for a unit expected to be eligible under this provision must submit a photocopy of a signed contract for the construction of the unit.

(c) *Commencement of commercial operation*. The Administrator will use EIA information submitted by the utility for the boiler on-line date as commencement of commercial operation.

[58 FR 15710, Mar. 23, 1993]

§ 73.19 Certain units with declining SO_2 rates.

(a) *Eligibility*. A unit is eligible for allowance allocations under this section if it meets the following requirements:

(1) It is an existing unit that is a utility unit;

(2) It serves a generator with nameplate capacity equal to or greater than 75 MWe;

(3) Its 1985 actual SO_2 emissions rate was equal to or greater than 1.2 lb/mmBtu;

(4) Its 1990 actual SO_2 emissions rate is at least 50 percent less than the lesser of its 1980 actual or allowable SO_2 emissions rate;

(5) Its actual SO_2 emission rate is less than 1.2 lb/mmBtu in any one calendar year from 1996 through 1999, as reported under part 75 of this chapter;

(6) It commenced commercial operation after January 1, 1970;

(7) It is part of a utility system whose combined commercial and industrial kilowatt-hour sales increased more than 20 percent between calendar years 1980 and 1990; and

(8) It is part of a utility system whose company-wide fossil-fuel SO_2 emissions rate declined 40 percent or more from 1980 to 1988.

(b) [Reserved]

[58 FR 15710, Mar. 23, 1993, as amended at 63 FR 51765, Sept. 28, 1998]

§ 73.20 Phase II early reduction credits.

(a) *Unit eligibility*. Units listed in table 2 or 3 of § 73.10 are eligible for allowances under this section if:

(1) The unit is not a unit subject to emissions limitation requirements of Phase I and is not a substitution unit (under 40 CFR 72.41) or a compensating unit (under 40 CFR 72.43);

(2) The unit is authorized by the Governor of the State in which the unit is located;

(3) The unit is part of a utility system (which, for the purposes of this section only, includes all generators operated by a single utility, including generators that are not fossil fuel-fired) that has decreased its total coal-fired generation, as a percentage of total system generation, by more than twenty percent between January 1, 1980, and December 31, 1985; and

(4) The unit is part of a utility system that during calendar years 1985 through 1987 had a weighted capacity factor for all coal-fired units in the system of less than fifty percent. The weighted capacity factor is equal to:

$$\text{Weighted Capacity Factor} = \frac{\text{Sum of actual generation of all coal-fired units in the utility system}}{\text{Sum of all coal generators' nameplate capacity} \times 8760}$$

(b) *Emissions reductions eligibility.* Sulfur dioxide emissions reductions eligible for allowance credits at units eligible under paragraph (a) of this section must meet the following requirements:

(1) Be made no earlier than calendar year 1995 and no later than calendar year 1999; and

(2) Be due to physical changes to the plant or are a result of a change in the method of operating the plant including but not limited to changing the type or quality of fuel being burned.

(c) *Initial certification of eligibility.* The designated representative of a unit that seeks allowances under this section shall apply for certification of unit eligibility prior to or accompanying a request for allowances under paragraph (d) of this section. A completed application for this certification shall be submitted according to § 73.13 and shall include the following:

(1) A letter from the Governor of the State in which the unit is located authorizing the unit to make reductions in sulfur dioxide emissions; and

(2) A report listing all units in the utility system, each fossil fuel-fired unit's fuel consumption and fuel heat content for calendar year 1980, and each generator's total electrical generation for calendar years 1980 and 1985 (including all generators, whether fossil fuel-fired, nuclear, hydroelectric or other).

(d) *Request for allowances.* (1) The designated representative of the requesting unit shall submit the request for allowances according to the procedures of § 73.13 and shall include the following information:

(i) The calendar year for which credits for reductions are requested and the actual SO_2 emissions and fuel consumption in that year;

(ii) A letter signed by the designated representative stating and documenting the specific physical changes to the plant or changes in the method of operating the plant (including but not limited to changing the type or quality of fuel being burned) which resulted in the reduction of emissions; and

(iii) A letter signed by the designated representative certifying that all photocopies are exact copies.

(2) The designated representative shall submit each request for allowances no later than March 1 of the calendar year following the year in which the reductions were made.

(e) *Allowance allocation.* The Administrator will allocate allowances to the eligible unit upon satisfactory submittal of information under paragraphs (c) and (d) of this section in the amount calculated by the following equations. Such allowances will be allocated to the unit's 2000 future year subaccount.

(1) ''Prior year'' means a single calendar year selected by the eligible unit from 1995 to 1999 inclusive.

(2) One ''credit'' equals one ton of eligible SO_2 emissions reductions.

(3) ''ERC units'' are units eligible for early reduction credits, and ''non-ERC units'' are fossil fuel-fired units that are part of the same operating system but are not eligible for early reduction credits.

(4) For any unit that did not operate during 1990, the unit's 1990 SO_2 emission rate will be equal to the weighted average emission rate of all of the

other units at the same source that did operate during 1990.

(5) Early reduction credits will be calculated at the unit level, subject to the restrictions in paragraph (e)(6) of this section.

(6) The number of credits for eligible Phase II units will be calculated as follows:

(i) *Comparison of the prior year utilization of ERC units to the 1990 utilization, as a percentage of system utilization.* If, as calculated below, system-wide prior year utilization of ERC units exceeds systems-wide 1990 utilization of ERC units on a percentage basis, then paragraphs (e)(6)(ii) and (iii) of this section apply. If not, the ERC units are eligible to receive early reduction credits as calculated in paragraph (e)(6)(v)(A) of this section.

$$\text{Prior year utilization} = \frac{\sum_{\text{ERC units}} \text{Heat input}_{\text{prior year}} \ (\text{in mmBtu})}{\sum_{\text{all system units}} \text{Heat input}_{\text{prior year}} \ (\text{in mmBtu})}$$

$$\text{1990 utilization} = \frac{\sum_{\text{ERC units}} \text{Heat input}_{1990} \ (\text{in mmBtu})}{\sum_{\text{all system units}} \text{Heat input}_{1990} \ (\text{in mmBtu})}$$

(ii) *Comparison of the prior year average emission rate of all ERC units to the prior year average emission rate of all non-ERC units.* If, as calculated below, the system-wide average SO_2 emission rate of ERC units exceeds that of non-ERC units, then a unit's prior year utilization will be restricted in accordance with paragraph (e)(6)(iv) of this section. If not, then paragraph (iii) of this section applies.

$$\text{ERC unit prior year emissions rate} = \frac{\sum_{\text{ERC units}} SO_2 \text{ emissions}_{\text{prior year}} \ (\text{in pounds})}{\sum_{\text{ERC units}} \text{Heat input}_{\text{prior year}} \ (\text{in mmBtu})}$$

$$\text{Non-ERC unit prior year emissions rate} = \frac{\sum_{\text{non-ERC units}} SO_2 \text{ emissions}_{\text{prior year}} \ (\text{in pounds})}{\sum_{\text{non-ERC units}} \text{Heat input}_{\text{prior year}} \ (\text{in mmBtu})}$$

(iii) *Comparison of the emission rate of the non-ERC units in the prior year to the emission rate of the non-ERC units in 1990.* If, as calculated in paragraph (ii) of this section, the prior year system average non-ERC SO_2 emission rate increases above the 1990 system average non-ERC SO_2 emission rate, as calculated below, then a unit's prior year utilization will be restricted in accordance with paragraph (e)(6)(iv) of this section. If not, the ERC units are eligible to receive early reduction credits as calculated in paragraph (e)(6)(v)(A) of this section.

$$\text{Non-ERC unit 1990 emission rate} = \frac{\sum_{\text{non-ERC units}} SO_2\ \text{emissions}_{1990}\ \text{(in pounds)}}{\sum_{\text{non-ERC units}} \text{Heat input}_{1990}\ \text{(in mmBtu)}}$$

(iv) *Calculation of the utilization limit for restricted units.* The limit on utilization for each unit eligible for early reduction credits subject to paragraphs (e)(6) (ii) and (iii) of this section will be calculated as follows:

$$\text{ERC unit's Heat input}_{\text{prior year}}\ \text{(in mmBtu)} \times \left(\frac{\left(\frac{\sum_{\text{ERC units}} \text{Heat input}_{1990}\ \text{(in mmBtu)}}{\sum_{\text{all units}} \text{Heat input}_{1990}\ \text{(in mmBtu)}} \right)}{\left(\frac{\sum_{\text{ERC units}} \text{Heat input}_{\text{prior year}}\ \text{(in mmBtu)}}{\sum_{\text{all units}} \text{Heat input}_{\text{prior year}}\ \text{(in mmBtu)}} \right)} \right)$$

This result, expressed in million Btus, is the restricted utilization of the ERC unit to be used in the calculation of early reduction credits in paragraph (e)(6)(v)(B) of this section.

(v)(A) *Calculation of the unit's early reduction credits where the unit's prior year utilization is not restricted.*

$$\frac{\left(\begin{array}{c}\text{ERC unit's} \\ SO_2\ \text{emission rate}_{1990} \\ \text{(in lb/mmBtu)}\end{array} - \begin{array}{c}\text{ERC unit's} \\ SO_2\ \text{emission rate}_{\text{prior year}} \\ \text{(in lb/mmBtu)}\end{array} \right) \times \begin{array}{c}\text{heat input}_{\text{prior year}} \\ \text{(in mmBtu)}\end{array}}{2000}$$

(B) *Calculation of the unit's early reduction credits where the unit's prior year utilization is restricted.*

$$\frac{\left(\begin{array}{c}\text{ERC unit's}\\ SO_2\text{ emission rate}_{1990}\\ \text{(in lb/mmBtu)}\end{array} - \begin{array}{c}\text{ERC unit's}\\ SO_2\text{ emission rate}_{\text{prior year}}\\ \text{(in lb/mmBtu)}\end{array}\right) \times \begin{array}{c}\text{restricted heat input from (iv)}\\ \text{(in mmBtu)}\end{array}}{2000}$$

(vi) The Administrator will allocate to the ERC unit allowances equal to the lesser of the calculated number of credits in paragraphs (e)(6)(v) (A) or (B) of this section and the following limitation:

$$\frac{\text{ERC unit's heat input}_{\text{prior year}} \times \text{the lesser of} \left[\begin{array}{c}2.5\\ \text{or}\\ \text{the most stringent SIP}\\ \text{emissions limit}\\ \text{(in lb/mmBtu)}\end{array}\right]}{2000} - \begin{array}{c}\text{ERC unit's}\\ SO_2\text{ emissions}_{\text{prior year}}\\ \text{(in tons)}\end{array}$$

(f) *Allowance loan program*—(1) *Eligibility*. Units eligible for Phase II early reduction credits under paragraph (a) of this section are eligible for allowances under this paragraph (f) if the weighted average emission rate (based on heat input) for the prior year for all of the affected units in the unit's dispatch system was less than the system-wide weighted average emission rate for 1990. The weighted average emission rate shall be calculated as follows:

$$\text{Weighted Average Emission Rate} = \frac{\sum \text{Unit Emission Rate} \times \text{Unit Utilization (inmmBtu)}}{\sum \text{Unit Utilization}}$$

For the purposes of this calculation, the unit's dispatch system will be the dispatch system as it existed as of November 15, 1990.

(2) *Allowance Calculation*. Allowances under this paragraph (f) shall be calculated as follows:

$$\text{Unit Allowances} = \left[1.75 - \begin{array}{c}\text{Greater of 1990 emission rate or}\\ \text{Prior year emission rate}\end{array}\right] \times \text{Prior year utilization/2000}$$

(3) *Allowance Loan*. (i) The number of allowances calculated under paragraph (f)(2) of this section shall be allocated to the unit's year 2000 subaccount.

(ii) The number of allowances calculated under paragraph (f)(2) of this section shall be deducted, contemporaneously with the allocation under paragraph (f)(3)(i) of this section, from the unit's year 2015 subaccount.

(iii) Notwithstanding paragraph (f)(3)(ii) of this section, if the number of allowances to be deducted exceeds the amount of allowances allocated to the unit for the year 2015, allowances in the year 2015 subaccount equal to the amount of allowances allocated to the unit for the year 2015 shall be deducted. In addition to the deduction from the year 2015 subaccount, a sufficient amount of allowances in the year

2016 subaccount (up to the amount of allowances allocated to the unit for the year 2016) shall be deducted contemporaneously, such that the sum of the allowances deducted from the subaccounts equals the number of allowances required to be deducted under paragraph (f)(3)(ii) of this section.

(iv) Notwithstanding paragraph (f)(3)(ii) of this section, the procedure in paragraph (f)(3)(iii) shall be applied as follows to each year after 2015 (year-by-year in numerical order) for which the number of allowances to be deducted from that year's subaccount exceeds the number allocated to the unit for that year: allowances equal to the number allocated for that year shall be deducted from that year's subaccount and the remainder (up to the amount allocated) necessary to equal the number of allowances required to be deducted under paragraph (f)(3)(ii) of this section shall be deducted from the next year's subaccount.

(v) The owners and operators of the unit shall ensure that sufficient allowances are available to make the full deductions required under paragraphs (f)(3)(ii), (iii), and (iv) of this section. The designated representative may specify the serial number of each allowance to be deducted.

(4) *ERC Units.* Any unit to which allowances are allocated under paragraph (f)(3)(i) of this section shall be considered an ERC unit for purposes of applying the restrictions in paragraph (e)(6) of this section.

[58 FR 15711, Mar. 23, 1993, as amended at 62 FR 34150, June 24, 1997]

§ 73.21 Phase II repowering allowances.

(a) *Repowering allowances.* In addition to allowances allocated under § 73.10(b), the Administrator will allocate, to each existing unit (under § 72.44(b)(1) of this chapter) with an approved repowering extension plan, allowances for use during the repowering extension period approved under § 72.44(f)(2)(ii) of this chapter (including a prorated allocation for any fraction of a year) equal to:

$$\text{Unit's Repowering Allowances} = \frac{\text{Unit's Baseline} \times \text{the lesser of} \left[\begin{array}{c}\text{1995 SIP} \\ \text{or} \\ \text{1995 Actual Rate}\end{array}\right]}{2000} - \text{Unit's Adjusted Basic Allowances}$$

where:

1995 SIP = Most stringent federally enforceable State implementation plan SO_2 emissions limitation for 1995.

1995 Actual Rate = 1995 actual SO_2 emissions rate

Unit's Adjusted Basic Allowances are as listed in the following table

Unit	Year 2000 adjusted basic allowances
RE Burger 1	1273
RE Burger 2	1245
RE Burger 3	1286
RE Burger 4	1316
RE Burger 5	1336
RE Burger 6	1332
New Castle 1	1334
New Castle 2	1485
New Castle 3	2935
New Castle 4	2686
New Castle 5	5481

(b) Upon commencement of commercial operation of a new unit (under § 72.44(b)(2) of this chapter) with an approved repowering extension plan, allowances for use during the repowering extension period approved will end and allocations under § 73.10(b) for the existing unit will be transferred to the subaccounts for the new unit.

(c)(1) If the designated representative for a repowering unit terminates the repowering extension plan in accordance with § 72.44(g)(1) of this chapter, the repowering allowances allocated to that unit by paragraph (a) of this section will be terminated and any necessary allowances from that unit's account forfeited, calculated in the following manner:

$$\text{Forfeited Repowering Allowances} = \text{Forfeiture Period} \times \left[\frac{\text{Unit's Baseline} \times \text{the lesser of} \left[\begin{array}{c} \text{1995 SIP} \\ \text{or} \\ \text{1995 Actual Rate} \end{array} \right]}{2000} - \text{Unit's Adjusted Basic Allowances} \right]$$

where:

Forfeiture Period = difference (as a portion of a year) between the end of the approved repowering extension and the end of the repowering extension under § 72.44(g)(1)(ii)

1995 SIP = Most stringent federally enforceable State implementation plan SO_2 emissions limitation for 1995.

1995 Actual Rate = 1995 actual SO_2 emissions rate

Unit's Adjusted Basic Allowances are as listed in the table in paragraph (a) of this section.

(c)(2) The Administrator will reallocate any allowances forfeited in paragraph (c)(1) of this section with a compliance use date of 2000 or any allowances remaining in the repowering reserve to all Table 2 units' years 2000 through 2009 subaccounts in the following manner:

$$\text{Reallocation} = \text{Forfeited Repowering Allowances} \times \frac{\text{Unit's Deductions at Table 2 Column B}}{27124}$$

[53 FR 15713, Mar. 23, 1993, as amended at 63 FR 51765, Sept. 28, 1998]

§§ 73.22–73.24 [Reserved]

§ 73.25 Phase I extension reserve.

The Administrator will initially allocate 3.5 million allowances to the Phase I Extension Reserve account of the Allowance Tracking System. Allowances from this Reserve will be allocated to units under § 72.42 of this chapter. Allowances remaining in the Phase I Extension Reserve account following allocation of all extension allowances under § 72.42 of this chapter will remain in the Reserve.

[58 FR 3687, Jan. 11, 1993]

§ 73.26 Conservation and renewable energy reserve.

The Administrator will allocate 300,000 allowances to the Conservation and Renewable Energy Reserve subaccount of the Acid Rain Data System. Allowances from this Reserve will be allocated to units under subpart F of this part. Termination of this Reserve and reallocation of allowances will be made under § 73.80(c).

[53 FR 15714, Mar. 23, 1993]

§ 73.27 Special allowance reserve.

(a) *Establishment of Reserve.* (1) The Administrator will allocate 150,000 allowances annually for calendar years 1995 through 1999 to the Auction Subaccount of the Special Allowance Reserve.

(2) The Administrator will allocate 250,000 allowances annually for calendar year 2000 and each year thereafter to the Auction Subaccount of the Special Allowance Reserve.

(b) *Distribution of proceeds.* (1) Monetary proceeds from the auctions and sales of allowances from the Special Allowance Reserve (under subpart E of this part) for use in calendar years 1995 through 1999 will be distributed to the designated representative of the unit according to the following equation:

unit proceeds = (Column B of table 1 of section 73.10/150,000) × total proceeds

(2) Until June 1, 1998, monetary proceeds from the auctions of allowances from the Special Allowance Reserve (under subpart E of this part) for use in calendar years 2000 through 2009 will be distributed to the designated representative of each unit listed in Table 2 according to the following equation:

$$\text{Units Proceeds} = \left\lfloor \frac{\text{Unit's Deduction Table 2 Column D}}{250{,}000} \right\rfloor \times \text{Total Proceeds}$$

(3) On or after June 1, 1998, monetary proceeds from the auctions of allowances from the Special Allowance Reserve (under subpart E of this part) for use in calendar years 2000 through 2009 will be distributed to the designated representative of each unit listed in Table 2 according to the following equation:

$$\text{Unit Proceeds} = \left\lfloor \frac{\text{Unit's Deduction at Table 2 Column A}}{250{,}000} \right\rfloor \times \text{Total Proceeds}$$

(4) Monetary proceeds from the auctions of allowances from the Special Allowance Reserve (under subpart E of this part) from years of purchase from 1993 through 1998, remaining in the U.S. Treasury as a result of the surrender of allowances and return of proceeds under § 73.10(b)(3), will be distributed to the designated representative of each unit listed in Table 2 according to the following equation:

$$\text{Unit Proceeds} = \left\lfloor \frac{\text{Unit's Deduction at Table 2 Column D}}{250{,}000} \right\rfloor \times \text{Remaining Proceeds}$$

(5) Monetary proceeds from the auctions of allowances from the Special Allowance Reserve (under subpart E of this part) for use in calendar years 2010 and thereafter will be distributed to the designated representative of each unit listed in Table 2 according to the following equation:

$$\text{Unit Proceeds} = \left\lfloor \frac{\text{Unit's Deduction at Table 2 Column E}}{250{,}000} \right\rfloor \times \text{Total Proceeds}$$

(c) *Reallocation of allowances.* (1) Allowances remaining in the Special Allowance Reserve following the annual auctions and sales (under subpart E of this part) for use in calendar years 1995 through 1999 will be reallocated to the unit's Allowance Tracking System Account according to the following equation:

unit allowances = (Column B of table 1 of section 73.10/150,000) × Allowances remaining

(2) Until June 1, 1998, allowances, for use in calendar years 2000 through 2009, remaining in the Special Allowance Reserve at the end of each year, following that year's auction (under subpart E of this part), will be reallocated to the unit's Allowance Tracking System account according to the following equation:

$$\text{Unit Allowances} = \left\lfloor \frac{\text{Unit's Deduction at Table 2 Column D}}{250{,}000} \right\rfloor \times \text{Allowances Remaining}$$

(3) On or after June 1, 1998, allowances, for use in calendar years 2000 through 2009, remaining in the Special Allowance Reserve at the end of each year, following that year's auction (under subpart E of this part), will be reallocated to the compliance account of the source that includes the unit according to the following equation:

$$\text{Unit Allowances} = \left\lfloor \frac{\text{Unit's Deduction at Table 2 Column A}}{250{,}000} \right\rfloor \times \text{Allowances Remaining}$$

(4) [Reserved]

(5) Allowances, for use in calendar years 2010 and thereafter, remaining in the Special Allowance Reserve at the end of each year, following that year's auction (under subpart E of this part), will be reallocated to the compliance account of the source that includes the unit according to the following equation:

$$\text{Unit Allowances} = \left\lfloor \frac{\text{Unit's Deduction at Table 2 Column E}}{250{,}000} \right\rfloor \times \text{Allowances Remaining}$$

(d) *Calculation rounding.* All proceeds under this section shall be distributed as whole dollars. All calculations for such allowances shall be rounded down for decimals less than .5 and up for decimals of .5 or greater.

(e) *Achieving exact totals.* (1) If the sum of the proceeds to be distributed under paragraph (b) of this section exceeds the total proceeds or the allowances to be reallocated under paragraph (c) of this section exceeds the allowances remaining, then the Administrator will withdraw one dollar or allowance from each unit, beginning with the unit receiving the largest number of dollars or allowances, in descending order, until the distribution balances with the proceeds and the reallocated allowances balance with the remaining allowances.

(2) If the sum of the proceeds to be distributed under paragraph (b) of this section is less than the total proceeds or the allowances to be reallocated under paragraph (c) of this section is less than the allowances remaining, then EPA will distribute one dollar or allowance for each unit, beginning with the unit receiving the largest number of dollars or allowances, in descending order, until the distribution balances with the proceeds and the reallocated allowances balance with the remaining allowances.

[58 FR 3687, Jan. 11, 1993, as amended at 58 FR 15714, Mar. 23, 1993; 63 FR 51765, Sept. 28, 1998; 70 FR 25335, May 12, 2005]

Subpart C—Allowance Tracking System

SOURCE: 58 FR 3691, Jan. 11, 1993, unless otherwise noted.

§ 73.30 Allowance tracking system accounts.

(a) *Nature and function of unit accounts.* The Administrator will establish compliance accounts for all affected sources pursuant to § 73.31 (a) and (b). All allocations of allowances pursuant to subparts B, E, and F of this

part and part 72 of this chapter, transfers of allowances made pursuant to subparts C and D, and deductions of allowances made for purposes of offsetting emissions pursuant to § 73.35 (b) and (d) and parts 72, 75, and 77 of this chapter will be recorded in the source's compliance account.

(b) *Nature and function of general accounts.* Transfers of allowances held for any person other than an affected source, made pursuant to subparts C, D, E, F, and G of this part will be recorded in that person's general account established pursuant to § 73.31(c).

[58 FR 3687, Jan. 11, 1993; 58 FR 40747, July 30, 1993, as amended at 70 FR 25335, May 12, 2005]

§ 73.31 Establishment of accounts.

(a) *Existing affected units.* The Administrator will establish a compliance account and allocate allowances for each source that includes a unit that is, or will become, an existing affected unit pursuant to sections 404(a) or 405 of the Act and § 72.6 of this chapter.

(b) *New units.* Upon receipt of a complete certificate of representation for the designated representative for a new unit pursuant to part 72, subpart B of this chapter, the Administrator will establish a compliance account for the source that includes the unit, unless the source already has a compliance account.

(c) *General accounts.* (1) Any person may apply to open an Allowance Tracking System account for the purpose of holding and transferring allowances. Such application shall be submitted to the Administrator in a format to be specified by the Administrator by means of the Allowance Account Information Form, or by providing the following information in a similar format:

(i) Name and title of the authorized account representative and alternate authorized account representative (if any) pursuant to § 73.33;

(ii) Mailing address, telephone number and facsimile transmission number (if any) of the authorized account representative and alternate authorized account representative (if any);

(iii) Organization or company name (if applicable) and type of organization (if applicable);

(iv) A list of all persons subject to a binding agreement for the authorized account representative to represent their ownership interest with respect to the allowances held in the general account and which shall be amended and resubmitted within 30 days following any transaction giving rise to any change of the list of persons subject to the binding agreement;

(v) A certification statement by the authorized account representative and alternate authorized account representative (if any) that reads ''I certify that I was selected under the terms of an agreement that is binding on all persons who have an ownership interest with respect to allowances held in the general account. I certify that I have all necessary authority to carry out my duties and responsibilities on behalf of the persons with an ownership interest and that they shall be fully bound by my representations, actions, inactions, or submissions under 40 CFR part 73. I am authorized to make this submission on behalf of the persons with an ownership interest for whom this submission is made. I certify under penalty of law that I have personally examined and am familiar with the information submitted in this document and all its attachments. Based on my inquiry of those individuals with primary responsibility for obtaining the information, I certify that the information is to the best of my knowledge and belief true, accurate, and complete. I am aware that there are significant penalties for submitting false material information, or omitting material information, including the possibility of fine or imprisonment for violations.'';

(vi) The signature of the authorized account representative and the alternate authorized account representative (if any); and

(vii) The date of the signature of the authorized account representative and the alternate authorized account representative (if any).

(2) Upon receipt of such complete application, the Administrator will establish an Allowance Tracking System account for the person or persons identified in the application.

(3) No allowance transfers will be recorded for a general account until the

Administrator has established the new account.

(d) *Account identification.* The Administrator will assign a unique identifying number to each account established pursuant to this section.

[58 FR 3687, Jan. 11, 1993; 58 FR 40747, July 30, 1993, as amended at 71 FR 25378, Apr. 28, 2006; 70 FR 25335, May 12, 2005]

§ 73.32 [Reserved]

§ 73.33 Authorized account representative.

(a) Following the establishment of an Allowance Tracking System account, all matters pertaining to the account, including, but not limited to, the deduction and transfer of allowances in the account, shall be undertaken only by the authorized account representative.

(b)–(c) [Reserved]

(d) *General account alternate authorized account representative.* Any application for opening a general account may designate one alternate authorized account representative to act on behalf of the certifying authorized account representative, in the event the authorized account representative is absent or otherwise not available to perform actions and duties under this part. The alternate shall be a natural person and shall be authorized, provided that the conditions and procedures specified in § 73.31(c)(1) are met.

(1) The alternate authorized account representative may be changed at any time by the authorized account representative upon receipt by the Administrator of a new complete application as required in § 73.31(c);

(2) The alternate authorized account representative shall be subject to the provisions of this part applicable to authorized account representatives;

(3) Whenever the term ''authorized account representative'' is used in this part it shall be construed to include the alternate authorized account representative, unless such a construction would be illogical from the context; and

(4) Any representation, action, inaction, or submission by the alternate authorized account representative when acting in that capacity shall be deemed to be a representation, action, inaction, or submission of the authorized account representative, with all the rights, duties, and responsibilities pertaining thereto.

(e) *Changes to the general account authorized account representative.* An authorized account representative for a general account may be succeeded by any person who submits an application pursuant to § 73.31(c). The representations, actions, inactions, or submissions of an authorized account representative for a general account shall be binding on any successor.

(f) *Objections to the authorized account representative.* Except for a certification pursuant to paragraph (e) of this section, no objection or other communication submitted to the Administrator concerning any representation, action, inaction, or submission to the Administrator by the authorized account representative shall affect any representation, action, inaction, or submission of the authorized account representative pursuant to subpart D of this part. Neither the United States, the Administrator, nor any permitting authority will adjudicate any dispute between and among persons concerning any submission to the Administrator by the authorized account representative; any actions of the authorized account representative; or any other matter arising directly or indirectly from the certification, actions or representations of the authorized account representative.

(g) *Delegation by authorized account representative and alternate authorized account representative.* (1) An authorized account representative may delegate, to one or more natural persons, his or her authority to make an electronic submission (in a format prescribed by the Administrator) to the Administrator provided for or required under this part.

(2) An alternate authorized account representative may delegate, to one or more natural persons, his or her authority to make an electronic submission (in a format prescribed by the Administrator) to the Administrator provided for or required under this part.

(3) In order to delegate authority to make an electronic submission to the Administrator in accordance with paragraph (g)(1) or (2) of this section,

the authorized account representative or alternate authorized account representative, as appropriate, must submit to the Administrator a notice of delegation, in a format prescribed by the Administrator, that includes the following elements:

(i) The name, address, e-mail address, telephone number, and facsimile transmission number (if any) of such authorized account representative or alternate authorized account representative;

(ii) The name, address, e-mail address, telephone number, and, facsimile transmission number (if any) of each such natural person (referred to as an ''agent'');

(iii) For each such natural person, a list of the type or types of electronic submissions under paragraph (g)(1) or (2) of this section for which authority is delegated to him or her;

(iv) The following certification statements by such authorized account representative or alternate authorized account representative:

(A) ''I agree that any electronic submission to the Administrator that is by an agent identified in this notice of delegation and of a type listed for such agent in this notice of delegation and that is made when I am a authorized account representative or alternate authorized representative, as appropriate, and before this notice of delegation is superseded by another notice of delegation under 40 CFR 73.33(g)(4) shall be deemed to be an electronic submission by me.''

(B) ''Until this notice of delegation is superseded by another notice of delegation under 40 CFR 73.33(g)(4), I agree to maintain an e-mail account and to notify the Administrator immediately of any change in my e-mail address unless all delegation of authority by me under 40 CFR 73.33(g) is eliminated.''

(4) A notice of delegation submitted under paragraph (g)(3) of this section shall be effective, with regard to the authorized account representative or alternate authorized account representative identified in such notice, upon receipt of such notice by the Administrator and until receipt by the Administrator of a superseding notice of delegation submitted by such authorized account representative or alternate authorized account representative, as appropriate. The superseding notice of delegation may replace any previously identified agent, add a new agent, or eliminate entirely any delegation of authority.

(5) Any electronic submission covered by the certification in paragraph (g)(3)(iv)(A) of this section and made in accordance with a notice of delegation effective under paragraph (g)(4) of this section shall be deemed to be an electronic submission by the designated representative or alternate designated representative submitting such notice of delegation.

[58 FR 3691, Jan. 11, 1993, as amended at 71 FR 25378, Apr. 28, 2006]

§ 73.34 Recordation in accounts.

(a) After a compliance account is established under § 73.31(a) or (b), the Administrator will record in the compliance account any allowance allocated to any affected unit at the source for 30 years starting with the later of 1995 or the year in which the compliance account is established and any allowance allocated for 30 years starting with the later of 1995 or the year in which the compliance account is established and transferred to the source with the transfer submitted in accordance with § 73.50. In 1996 and each year thereafter, after Administrator has completed the deductions pursuant to § 73.35(b), the Administrator will record in the compliance account any allowance allocated to any affected unit at the source for the new 30th year (*i.e.*, the year that is 30 years after the calendar year for which such deductions are made) and any allowance allocated for the new 30th year and transferred to the source with the transfer submitted in accordance with § 73.50.

(b) After a general account is established under § 73.31(c), the Administrator will record in the general account any allowance allocated for 30 years starting with the later of 1995 or the year in which the general account is established and transferred to the general account with the transfer submitted in accordance with § 73.50. In 1996 and each year thereafter, after the Administrator has completed the deductions pursuant to § 73.35(b), the Administrator will record in the general

account any allowance allocated for the new 30th year (*i.e.*, the year that is 30 years after the calendar year for which such deductions are made) and transferred to the general account with the transfer submitted in accordance with § 73.50.

(c) Allowances in each compliance account and general account subaccounts will reflect:

(1) All allowances allocated or deducted for the unit for the year pursuant to subpart B of this part;

(2) All allowances allocated or deducted pursuant to §§ 72.41, 72.42, 72.43, and 72.44 and part 74 of this chapter;

(3) All allowances allocated pursuant to subparts F and G of this part;

(4) All allowances recorded as a result of purchases or returns from the annual auctions;

(5) All allowances recorded or deducted as a result of allowance transfers recorded pursuant to subpart D of this part; and

(6) All allowances deducted or returned pursuant to §§ 73.35(d), 72.91 and 72.92, part 74, and part 77 of this chapter.

(d) *Serial numbers for allocated allowances.* Upon the allocation of allowances to an account, including allowances contained in reserves as provided in subpart B of this part, the Administrator will assign each allowance a unique identification number that will include digits identifying the allowance's compliance use date.

[58 FR 3691, Jan. 11, 1993, as amended at 60 FR 17114, Apr. 4, 1995; 63 FR 68404, Dec. 11, 1998; 70 FR 25335, May 12, 2005]

§ 73.35 Compliance.

(a) *Allowance transfer deadline.* No allowance shall be deducted for purposes of compliance with an affected source's sulfur dioxide Acid Rain emissions limitation requirements pursuant to title IV of the Act and paragraph (b) of this section unless:

(1) The compliance use date of the allowance is no later than the year in which the source's SO_2 emissions occurred; and

(2) The allowance is:

(i) Recorded in the source's compliance account; or

(ii) Transferred to the source's compliance account, with the transfer submitted correctly pursuant to subpart D of this part for recordation in the source's compliance account by not later than the allowance transfer deadline in the calendar year following the year for which compliance is being established; and

(3) The allowance was not previously deducted by the Administrator in accordance with a State SO_2 mass emissions reduction program under § 51.124(o) of this chapter or otherwise permanently retired in accordance with § 51.124(p) of this chapter.

(b) *Deductions for compliance.* (1) Except as provided in paragraph (d) of this section, following the recordation of transfers submitted correctly for recordation in the compliance account pursuant to paragraph (a) of this section and subpart D of this part, the Administrator will deduct allowances available for deduction under paragraph (a) of this section from each affected source's compliance account in accordance with the allowance deduction formula in § 72.95 of this chapter, or, for opt-in sources, the allowance deduction formula in § 74.49 of this chapter, and any correction made under § 72.96 of this chapter.

(2) The Administrator will make deductions until either the number of allowances deducted is equal to the amount calculated in accordance with § 72.95 of this chapter, or, for opt-in sources, in accordance with § 74.49 of this chapter, as modified under § 72.96 of this chapter or until no more allowances available for deduction under paragraph (a) of this section remain in the compliance account.

(ii) Notwithstanding paragraph (b)(3)(i) of this section, if the amount calculated results in less than 10 tons of excess emissions, the maximum deduction from other units shall be adjusted so that 10 tons of excess emissions, or the tons of excess emissions that would result if no allowances could be deducted from other units, whichever is less, remain for the unit.

(iii) If the authorized account representative submits within 15 days of receipt of a notification under paragraph (b)(3)(i) of this section a written request specifying allowances to deduct in accordance with paragraphs

(b)(3)(i) and (ii) of this section, the Administrator will deduct such allowances, and reduce the tons of excess emissions otherwise at the unit by an equal amount, up to the amount calculated under paragraphs (b)(3)(i) and (ii) of this section.

(c)(1) *Identification of allowances by serial number.* The authorized account representative for a source's compliance account may request that specific allowances, identified by serial number, in the compliance account be deducted for a calendar year in accordance with paragraph (b) or (d) of this section. Such request shall be submitted to the Administrator by the allowance transfer deadline for the year and include, in a format prescribed by the Administrator, the identification of the source and the appropriate serial numbers.

(2) *First-in, first-out.* In the absence of an identification or in the case of a partial identification of allowances by serial number, as provided for in paragraph (b)(1) or (d) of this section, the Administrator will deduct allowances on a first-in, first-out (FIFO) accounting basis beginning with those allowances with the earliest compliance use date originally allocated for the units at the source and recorded in the source's compliance account. Following the deduction of all originally allocated allowances from the compliance account, the Administrator will deduct those allowances that were transferred and recorded in the source's compliance account pursuant to subpart D of this part, beginning with those with the earliest date of recordation.

(d) *Deductions for excess emissions.* Pursuant to § 77.4 of this chapter, and following the process of recordation set forth in § 73.34(a) of this part, the Administrator will deduct allowances for each source with excess emissions for the preceding calendar year in an amount equal to the source's excess emissions tonnage.

[58 FR 3691, Jan. 11, 1993, as amended at 60 FR 17114, Apr. 4, 1995; 64 FR 25842, May 13, 1999; 70 FR 25335, May 12, 2005]

§ 73.36 Banking.

(a) *Compliance accounts.* Any allowance in a compliance account not deducted pursuant to § 73.35 will remain in the compliance account.

(b) *General accounts.* In the case of a general account, any allowances in the general account not transferred pursuant to subpart D to another Allowance Tracking System account will remain in the general account.

[58 FR 3691, Jan. 11, 1993, as amended at 70 FR 25336, May 12, 2005]

§ 73.37 Account error.

The Administrator may, at his or her sole discretion and on his or her own motion, correct any error in any Allowance Tracking System account. Within 10 business days of making such correction, the Administrator will notify the authorized account representative for the account.

[70 FR 25336, May 12, 2005]

§ 73.38 Closing of accounts.

(a) *General account.* The authorized account representative of a general account may instruct the Administrator to close the general account by submitting an allowance transfer, pursuant to § 73.50 and § 73.52, requesting the transfer of all allowances held in the account to one or more other accounts in the Allowance Tracking System, and by submitting in writing, with the signature of the authorized account representative, a request to close the general account.

(b) *Inactive accounts.* If a general account shows no activity for a 12-month period or longer and does not contain any allowances, the Administrator may notify the account's authorized account representative that the account will be closed following 20 business days from the date the notice is sent. The account will be closed following the 20-day period, unless the Administrator receives and records a request for the transfer of allowances into the account pursuant to § 73.52 before the end of the 20-day period, or the authorized account representative submits, in writing, demonstration of good cause as to why the inactive account should not be closed.

[58 FR 3691, Jan. 11, 1993, as amended at 70 FR 25336, May 12, 2005]

Subpart D—Allowance Transfers

SOURCE: 58 FR 3694, Jan. 11, 1993, unless otherwise noted.

§ 73.50 Scope and submission of transfers.

(a) *Scope of transfers.* Except as provided in § 73.51 and § 73.52, the Administrator will record transfers of an allowance to and from Allowance Tracking System accounts.

(b) *Submission of transfers.* (1) Authorized account representatives seeking recordation of an allowance transfer shall request such transfer by submitting to the Administrator, in a format to be specified by the Administrator, an Allowance Transfer Form. To be considered correctly submitted the request for transfer shall include:

(i) The numbers identifying both the transferror and transferee accounts;

(ii) A specification by serial number of each allowance to be transferred;

(iii) Signatures of the authorized account representatives of both the transferror and transferee accounts;

(iv) The dates of the signatures of the authorized account representatives;

(v) The numbers identifying the authorized account representatives for both the transferror and transferee account; and

(vi) Where the transferee account has not been established, information as required pursuant to § 73.31 (b) or (c).

(2)(i) The authorized account representative for the transferee account can meet the requirements in paragraphs (b)(1)(iii) and (iv) of this section by submitting, in a format prescribed by the Administrator, a statement signed by the authorized account representative and identifying each account into which any transfer of allowances, submitted on or after the date on which the Administrator receives such statement, is authorized. Such authorization shall be binding on any authorized account representative for such account and shall apply to all transfers into the account that are submitted on or after such date of receipt, unless and until the Administrator receives a statement in a format prescribed by the Administrator and signed by the authorized account representative retracting the authorization for the account.

(ii) The statement under paragraph (b)(2)(i) of this section shall include the following: ''By this signature, I authorize any transfer of allowances into each account listed herein, except that I do not waive any remedies under State or federal law to obtain correction of any erroneous transfers into such accounts. This authorization shall be binding on any authorized account representative for such account unless and until a statement signed by the authorized account representative retracting this authorization for the account is received by the Administrator.''

[58 FR 3694, Jan. 11, 1993, as amended at 63 FR 68404, Dec. 11, 1998; 70 FR 25336, May 12, 2005]

§ 73.51 [Reserved]

§ 73.52 EPA recordation.

(a) *General recordation.* Except as provided in this paragraph (a), the Administrator will record an allowance transfer by no later than five business days (or longer as necessary to perform a transfer in perpetuity of allowances allocated to a unit) following receipt of an allowance transfer request pursuant to § 73.50, by moving each allowance from the transferror account to the transferee account as specified by the request pursuant to § 73.50, provided that:

(1) The transfer is correctly submitted under § 73.50;

(2) The transferor account includes each allowance identified by serial number in the transfer; and

(3) If the allowances identified by serial number specified pursuant to § 73.50(b)(1)(ii) are subject to the limitation on transfer imposed pursuant to § 72.44(h)(1)(i) of this chapter, § 74.42 of this chapter, or § 74.47(c) of this chapter, the transfer is in accordance with such limitation.

(b) To the extent an allowance transfer submitted for recordation after the allowance transfer deadline includes allowances allocated for any year before the year in which the allowance transfer deadline occurs, the transfer of such allowance will not be recorded

until after completion of the deductions pursuant to § 73.35(b) for year before the year in which the allowance transfer deadline occurs.

(c) Where an allowance transfer submitted for recordation fails to meet the requirements of paragraph (a) of this section, the Administrator will not record such transfer.

[58 FR 3694, Jan. 11, 1993, as amended at 60 FR 17114, Apr. 4, 1995; 70 FR 25336, May 12, 2005]

§ 73.53 Notification.

(a) *Notification of recordation.* The Administrator will notify each party to an allowance transfer within five business days following the recordation of the transfer. Notice will be given in writing or in a format to be specified by the Administrator, to the authorized account representatives of both the transferror and transferee accounts.

(b) *Notification of non-recordation.* By no later than five business days following receipt of an allowance transfer request by the Administrator, the Administrator will notify, in writing or in a format to be specified by the Administrator, the authorized account representatives of the accounts subject to the allowance transfer request submitted for recordation of:

(1) A decision not to record the transfer, and

(2) The reasons for such non-recordation.

(c) Nothing in this section shall preclude the submission of an allowance transfer request for recordation following notification of non-recordation.

Subpart E—Auctions, Direct Sales, and Independent Power Producers Written Guarantee

SOURCE: 56 FR 65601, Dec. 17, 1991, unless otherwise noted.

§ 73.70 Auctions.

(a) *Allowances to be auctioned.* Every year the Administrator will auction allowances from the Auction Subaccount, established pursuant to subpart B of this part, according to the following schedule:

TABLE I—ALLOWANCE SCHEDULE FOR AUCTIONS

Year of purchase	Spot auction	Advance auction	Advance auction*
1993	50,000 [a]	100,000 [b]	
1994	50,000 [a]	100,000 [b]	25,000 [c]
1995	50,000 [a]	100,000 [b]	25,000 [c]
1996	150,000	100,000 [b]	25,000 [c]
1997	150,000	125,000 [b]	25,000 [c]
1998	150,000	125,000 [b]	
1999	150,000	125,000 [b]	
2000 and after	125,000	125,000 [b]	

[a] Not usable until 1995.
[b] Not usable until 7 years after purchase.
[c] Not usable until 6 years after purchase.
*These are unsold advance allowances from the direct sale program for 1993, 1994, 1995, and 1996 respectively.

In addition to the allowances listed above, the Administrator will auction allowances pursuant to paragraph (c) of this section and § 73.72(q) in the amounts and at the times provided for therein.

(b) *Timing of the auctions.* The spot auction and the advance auction will be held on the same day, selected each year by the Administrator, but no later than March 31 of each year. The Administrator will conduct one spot auction and one advance auction in each calendar year.

(c) *Submittal for other allowances for auction.* Authorized account representatives may offer allowances for sale at auction, provided that allowances are dated for the year in which they are offered or for any previous year or for seven years following the year in which they are offered. Such authorized account representatives may specify a minimum price for the allowances offered at the auctions. The authorized account representative must notify the Administrator fifteen business days prior to the auctions, using the SO_2 Allowance Offer Form published by the Administrator, or by means of electronic communication if the Administrator, following public notice, so requires or permits at some future time. The notification shall include:

(1) The compliance use date of the allowances offered;

(2) The number of allowances to be sold and any other information identifying the allowances offered that may be required by subpart C of this part;

(3) Any minimum price; and

(4) Whether the authorized account representative is willing to sell fewer allowances than the number stated in paragraph (c)(2) of this section, if the

full amount cannot be sold. After notification, the Administrator will deduct allowances from the appropriate Allowance Tracking System account from which allowances are being offered and place them in a separate subaccount for such allowances.

(d) *Conduct of the auctions.* (1) The Administrator will rank all bids in descending order of bid price starting with the highest. Allowances will be sold from the Auction Subaccount in this order at the amounts specified in the bids until there are no allowances in the subaccount. If all allowances are sold from the Auction Subaccount, including unsold allowances transferred from the preceding year's direct sale, and if bids still remain, the Administrator will sell allowances offered by the authorized account representatives, beginning with those offered at the lowest minimum price. Allowances offered at the lowest minimum price will be matched with the highest bid remaining after the Auction Subaccount is exhausted. Sales of offered allowances, including, but not limited to, allowances offered by more than one offeror at the same minimum bid price, will continue in ascending order of minimum price, starting with the lowest, and descending order of remaining bids, starting with the highest, until:

(i) All allowances are sold,

(ii) No bids remain, or

(iii) Prices of remaining bids do not meet minimum prices required in remaining offers.

(2) In the event that there is more than one bid submitting the same price and the total number of allowances requested in all such bids exceeds the number of allowances remaining, the Administrator will award the remaining allowances by lottery to such bidders.

(3) In the event that there are more offers of sale at the minimum price than there are bids meeting that price, allowances from all such offers will be sold to cover the bids, according to each such offeror's pro rata share of all allowances so offered.

(4) In the event that fewer allowances remain than are requested in a bid, the Administrator will sell such remaining allowances to the bidder provided that, pursuant to §73.71(b)(4), the bid states the bidder's willingness to purchase fewer allowances than requested in the bid.

(5) In the event that fewer than all allowances included in an offer for sale would be sold to remaining bids based on price, the Administrator will sell such allowances to the bidder(s), provided that, pursuant to §73.70(c)(4), the offer states the offeror's willingness to sell fewer allowances than were offered for sale.

(e) *Announcement of results.* Following each auction, the Administrator will publish the names of winning bidders and their bids, the amounts of losing bids, and the lowest price at which allowances are sold.

(f) *Transfer of allowances.* Allowances will be transferred from the Auction Subaccount and from the Allowance Tracking System account for allowances offered by authorized account representatives to the Allowance Tracking System accounts of successful bidders as soon as payment is collected by the Administrator.

(g) *Return of unsuccessful bids.* The Administrator will return payment to unsuccessful bidders and to bidders unwilling to purchase fewer allowances than requested following the conclusion of each auction.

(h) *Transfer of proceeds.* The Administrator will return all proceeds from the auction as follows:

(1) Allowances auctioned from the Auction Subaccount. Not later than 90 days following each auction, the Administrator will pay a pro rata share of the proceeds of each auction to the authorized account representative of each unit from whose annual allowance allocation allowances were withheld for the purposes of establishing the Auction Subaccount. Each unit's pro rata share will be calculated pursuant to regulations to be promulgated under subpart B.

(2) Allowances contributed from others. Not later than 90 days following each auction, the Administrator will transfer the full amount of the proceeds of each sale of allowances offered by authorized account representatives to such representatives. Proceeds from the sale of allowances that were offered with the same specified minimum price

will be distributed according to each such offeror's pro rata share of the sale of such allowances.

(3) The Administrator will pay no interest on any payment made pursuant to paragraphs (h) (1) and (2) of this section.

(i) *Return of unsold allowances.* The Administrator will return all unsold allowances from the auction as follows:

(1) Allowances in the Auction Subaccount. At the conclusion of each auction, the Administrator will transfer to the Allowance Tracking System account of each source that includes a unit specified in paragraph (h)(1) of this section its pro rata share of any allowances remaining in the Auction Subaccount. Each unit's pro rata share will be calculated pursuant to regulations to be promulgated under subpart B.

(2) Allowances contributed from others. At the conclusion of each auction, the Administrator will return unsold allowances to the appropriate offerors' Allowance Tracking System accounts. Any unsold allowances that were offered with the same specified minimum price will be distributed according to each such offeror's pro rata share of all such allowances offered.

[56 FR 65601, Dec. 17, 1991, as amended at 61 FR 28763, June 6, 1996; 63 FR 5735, Feb. 4, 1998; 63 FR 51766, Sept. 28, 1998; 70 FR 25336, May 12, 2005]

§ 73.71 Bidding.

(a) *Who may participate in the auctions.* Any person may participate in the auctions by submitting a bid or bids pursuant to this section.

(b) *Bidding.* Sealed bids shall be sent to the Administrator using the Bid Form for SO_2 Allowance Auctions, or some method of electronic transfer if the Administrator, following public notice, so requires or permits at some future time. The bid form shall state:

(1) The number of allowances sought and the price;

(2) Whether spot or advance allowances are sought;

(3) Allowance Tracking System account number;

(4) Whether the bidder is willing to purchase fewer allowances than the number of allowances stated in (b)(1) of this section if the full amount is not available. Where the bidder holds no Allowance Tracking System account, a New Account/New Authorized Account Representative Form must accompany the bid. New account information shall include at a minimum: Name, address, telephone number, facsimile number, organization or company name (if applicable), type of organization, and the authorized account representative for purposes of the account.

(c) *Payment.* Each bid must include a certified check or letter of credit for the total bid price, or may specify a method of electronic transfer or other method of payment, if the Administrator, following public notice, so requires or permits at some future time. The certified check should be made payable to the U.S. EPA. To meet the requirements of this paragraph bidders must submit a completed SO_2 Allowance Auction Letter of Credit Form. If such Form is used, the Administrator must receive full payment for allowances awarded at the auctions, either by wire transfer or certified check, no later than 2 business days after the results of the auction are announced in the Allowance Tracking System.

(d) *Bid amount and number of bids.* Bidders may request any number of allowances up to the amount of allowances available for auction. Any person may submit more than one bid in each auction, provided that each bid meets the requirements of this section.

(e) *Submission of bids.* The Administrator will publish in the FEDERAL REGISTER and in the Commerce Business Daily the address of where to submit bids and payment not later than 60 calendar days before each auction.

(f) *Deadline for bids.* All bids must be revised by the Administrator no later than 3 business days prior to the date of the auctions.

§ 73.72 Direct sales.

Allowances that were formerly part of the direct sale program, which has been terminated under § 73.73(b), will be included in the annual allowance auctions in accordance with § 73.70(a).

[61 FR 28763, June 6, 1996]

§ 73.73 Delegation of auctions and sales and termination of auctions and sales.

(a) *Delegation*. The Administrator may, in the Administrator's discretion, by delegation or contract provide for the conduct of sales or auctions under the Administrator's supervision by other departments or agencies of the United States Government or by nongovernmental agencies, groups, or organizations.

(b) *Termination of sales*. If the Administrator determines that, during any period of 2 consecutive calendar years, fewer than 20 percent of the allowances available in the subaccount for direct sales have been purchased, the Administrator shall terminate the Direct Sale Subaccount and transfer such allowances to the Auction Subaccount.

(c) *Termination of auctions*. The Administrator may, in the Administrator's discretion, terminate the withholding of allowances and the auctions if the Administrator determines, that, during any period of 3 consecutive years after 2002, fewer than 20 percent of the allowances available in the Auction Subaccount have been purchased.

Subpart F—Energy Conservation and Renewable Energy Reserve

SOURCE: 58 FR 3695, Jan. 11, 1993, unless otherwise noted.

§ 73.80 Operation of allowance reserve program for conservation and renewable energy.

(a) *General*. The Administrator will allocate allowances from the Conservation and Renewable Energy Reserve (the ''Reserve'') established under subpart B based on verified kilowatt hours saved through the use of one or more qualified energy conservation measures or based on kilowatt hours generated by qualified renewable energy generation. Allowances will be allocated to applicants that meet the requirements of this subpart according to the formulas specified in § 73.82(d), and in the order in which applications are received, except where provided for in § 73.84 and § 73.85, until a total of 300,000 allowances have been allocated.

(b) *Period of applicability*. Allowances will be allocated under this subpart for qualified energy conservation measures or renewable energy generation sources that are operational on or after January 1, 1992, and before the date on which any unit owned or operated by the applicant becomes a Phase I unit or a Phase II unit.

(c) *Termination of the Reserve*. The Administrator will reallocate any allowances remaining in the Reserve after January 2, 2010 to the affected units from whom allowances were withheld by the Administrator, in accordance with section 404(g), for purposes of establishing the Reserve. Each unit's allocation under this paragraph will be calculated as follows:

$$\frac{\text{Remaining allowances in the Reserve} \times \text{Unit's allowances withheld}}{\text{Total amount in Reserve}}$$

(Allowances will be rounded to the nearest allowance)

[58 FR 3695, Jan. 11, 1993; 58 FR 40747, July 30, 1993]

§ 73.81 Qualified conservation measures and renewable energy generation.

(a) *Qualified energy conservation measures*. A qualified energy conservation measure is a demand-side measure not operational until the period of applicability, implemented in the residence or facility of a customer to whom the utility sells electricity, that:

(1) Is specified in appendix A(1) of this subpart; or

(2) In the case of a device or material that is not included in appendix A(1) of this subpart,

(i) Is a cost-effective demand-side measure consistent with an applicable least-cost plan or least-cost planning process that increases the efficiency of the customer's use of electricity (as measured in accordance with § 73.82(c)) without increasing the use by the customer of any fuel other than qualified renewable energy, industrial waste heat, or, pursuant to paragraph (b)(5) of this section, industrial waste gases;

(ii) Is implemented pursuant to a conservation program approved by the utility regulatory authority, which certifies that it meets the requirements of paragraph (a)(2)(i) of this section and is not excluded by paragraph (b) of this section; and

(iii) Is reported by the applicant in its application to the Reserve.

(b) *Non-qualified energy conservation measures.* The following energy conservation measures shall not qualify for Allowance Reserve allocations:

(1) Demand-side measures that were operational before January 1, 1992;

(2) Supply-side measures;

(3) Conservation programs that are exclusively informational or educational in nature;

(4) Load management measures that lead to economic reduction of electric energy demand during a utility's peak generating periods, unless kilowatt hour savings can be verified by the utility pursuant to § 73.82(c); or

(5) Utilization of industrial waste gases, unless the applicant has certified that there is no net increase in sulfur dioxide emissions from such utilization.

(c) *Qualified renewable energy generation.* Qualified renewable energy generation is electrical energy generation, not operational until the period of applicability, that:

(1) Is specified in appendix A(3) of this subpart; or

(2) In the case of renewable energy generation that is not included in appendix A(3) of this subpart is#:

(i) Consistent with a least cost plan or a least cost planning process and derived from biomass (*i.e.,* combustible energy-producing materials from biological sources which include wood, plant residues, biological wastes, landfill gas, energy crops, and eligible components of municipal solid waste), solar, geothermal, or wind resources;

(ii) Implemented pursuant to approval by the utility regulatory authority, which certifies that it meets the requirements of paragraphs (c)(2)(i) and (c)(2)(ii) of this section and is not excluded by paragraph (d) of this section; and

(iii) Is reported by the applicant in its application to the Reserve.

(d) *Non-qualified renewable energy generation.* The following renewable energy generation shall not qualify for Allowance Reserve allocations:

(1) Renewable energy generation that was operational before January 1, 1992;

(2) Measures that reduce electricity demand for a utility's customers without providing electric generation directly for sale to customers; and

(3) Measures that appear on the list of qualified energy conservation measures in appendix A(1) of this subpart.

[58 FR 3695, Jan. 11, 1993; 58 FR 40747, July 30, 1993]

§ 73.82 Application for allowances from reserve program.

(a) *Application Requirements.* Each application for Conservation and Renewable Energy Reserve allowances, shall:

(1) Certify that the applicant is a utility;

(2) Demonstrate that the applicant, any subsidiary of the applicant, or any subsidiary of the applicant's holding company, is an owner or operator, in whole or in part, of at least one Phase I or Phase II unit by including in the application the name and Allowance Tracking System account number of a Phase I or Phase II unit which it owns or operates and for which it is listed as an owner or operator on the certificate of representation submitted by the designated representative for the unit pursuant to § 72.20 of this chapter;

(3) Through certification, demonstrate that the applicant is paying in whole or in part for one or more qualified energy conservation measures or qualified renewable energy generation (that became operational during the period of applicability) either directly or through payment to another person that purchases the qualified energy conservation measure or qualified renewable energy generation;

(4) Demonstrate that the applicant is subject to a least cost plan or a least cost planning process that:

(i) provides an opportunity for public notice and comment or other public participation processes;

(ii) evaluates the full range of existing and incremental resources in order to meet expected future demand at lowest system cost;

(iii) treats demand-side resources and supply-side resources on a consistent and integrated basis;

(iv) takes into account necessary features for system operation such as diversity, reliability, dispatchability, and other factors of risk;

(v) may take into account other factors, including the social and environmental costs and benefits of resource investments; and

(vi) is being implemented by the applicant to the maximum extent practicable.

(5) Demonstrate that the qualified energy conservation measure adopted or qualified renewable energy generated, or both, are consistent with the least cost plan or least cost planning process;

(6) If the applicant is subject to the rate-making jurisdiction of a State or local utility regulatory authority, its least cost plan or least cost planning process has been approved or accepted by the utility regulatory authority in the State or locality in which the qualified conservation measure(s) are adopted or in which the qualified renewable energy generation is utilized, and such State or local utility regulatory authority certifies that the least-cost plan or least-cost planning process meets the requirements of paragraph (a)(4) of this section;

(7) If the applicant is not subject to the rate-making jurisdiction of a State or local regulatory authority, its least cost plan or least cost planning process has been approved or has been accepted by the utility regulatory authority with rate-making jurisdiction over the applicant, and such utility regulatory authority certifies that the least cost plan or least cost planning process meets the requirements of paragraph (a)(4) of this section;

(8) If the applicant is an independent power production facility that sells qualified renewable energy generation to another utility, the applicant has enclosed documentation that such qualified renewable energy generation was purchased pursuant to the purchasing utility's least cost plan or least cost planning process, which has been approved or accepted by the purchasing utility's utility regulatory authority.

(9)(i) If the applicant is an investor-owner utility subject to the rate-making jurisdiction of a State utility regulatory authority and is submitting an application on the basis of one or more qualified energy conservation measures, such State utility regulatory authority has established a procedure for determining rates and charges ensuring net income neutrality, as defined in § 72.2 of this chapter, including a provision that the utility's net income is compensated in full (considering factors such as risk) for lost sales attributable to the utility's conservation programs, which may include:

(A) General ratemaking for formulas that decouple utility profits from actual utility sales;

(B) Specific rate adjustment formulas that allow a utility to recover in its retail rates the full costs of conservation measures plus any associated net revenues lost as a result of reduced sales resulting from conservation initiatives; or

(C) Conservation incentive mechanisms designed to provide positive financial rewards to a utility to encourage implementation of cost-effective measures;

(ii) Provided that the existence of any one of the categories of rate-making or rate adjustment formulas or conservation incentive mechanisms specified in paragraph (a)(9)(i) of this section shall not necessarily constitute fulfillment of the net income neutrality requirement unless, pursuant to § 73.83, the Secretary of Energy has certified the establishment of such net income neutrality;

(10) Demonstrate that the applicant has implemented the qualified energy conservation measures or used the qualified renewable energy generation specified in the application during the period of applicability;

(11) Demonstrate the extent to which installation of the qualified conservation measure(s) has achieved actual energy savings, by stating, on the basis of the performance of the measure(s) following installation:

(i) The amount of kilowatt hour savings resulting from the measure(s) in the given year(s);

(ii) Pursuant to paragraph (c) of this section, the methodology used to calculate the kilowatt hour savings; and

(iii) The name, address, and phone number of the person who performed the calculation of kilowatt hour savings;

(12) Report the type and amount of yearly qualified renewable energy generation, by stating (and submitting documentation, including copies of plant operation records, supporting such statements) the kilowatt hours of qualified renewable energy generated during a previous calendar year or years; and

(13) Report the extent to which qualified renewable energy generation was produced in combination with other energy sources (hereafter ''hybrid generation'') by stating (and submitting documentation, including copies of plant operation records, supporting such statements) the heat input and heat rate of the non-qualified renewable generation, the total annual kilowatt hours generated, and the kilowatt hours that can be attributed to qualified renewable energy generation;

(14) Demonstrate the extent to which the implementation of qualified energy conservation measures or the use of qualified renewable energy generation has resulted in avoided tons of sulfur dioxide emissions by the utility during the period of applicability, pursuant to paragraph (d) of this section.

(b) *Application to the Secretary of Energy*. For purposes of paragraph (a)(9) of this section, the applicant shall fulfill the following requirements:

(1) If a utility applying for allowances from the Reserve has not received certification of net income neutrality from the Secretary of Energy or such certification is no longer applicable, the applicant shall submit to the Secretary of Energy:

(i) A copy of the relevant State utility regulatory authority's final order or decision setting forth the approved ratemaking mechanisms that ensure that a utility's net income will be at least as high upon implementation of energy conservation measures as such net income would have been if the energy conservation measures has not been implemented;

(ii) A description of how the State utility regulatory authority's order or decision meets the definition of net income neutrality as defined in § 72.2; and

(iii) Any additional information necessary for Secretary of Energy to certify that the State regulatory authority has established rates and charges that ensure net income neutrality.

(2) If a utility applying for allowances from the Reserve has already received certification of net income neutrality from the Secretary of Energy in connection with a previous application for allowances, and the ratemaking methods or procedures that ensure net income neutrality have not been altered, the applicant shall certify that the ratemaking methods and procedures that led to the original certification are still in place.

(c) *Verification of energy savings methodology*. For the purposes of paragraph (a)(11) of this section:

(1) Applicants subject to the ratemaking jurisdiction of a State utility regulatory authority shall use the energy conservation verification methodology approved by such authority in support of energy conservation applications under this subpart and part 72 of this chapter, provided that

(i) The authority in question uses this methodology to determine the applicant's entitlement to performance-based rate adjustments, which permit a utility's rates to be adjusted for additional kilowatt hours saved due to the utility's energy conservation programs;

(ii) Such performance based rate adjustments are subject to modification either prospectively or retrospectively to reflect periodic evaluations of energy savings secured by the applicant; and

(iii) The applicant has provided the Administrator with a description of the State utility regulatory authority's verification methodology and documentation that the requirements of this paragraph (e) have been met.

(2) All other applicants, including applicants whose rates are not subject to the ratemaking jurisdiction of a State utility regulatory authority shall demonstrate to the satisfaction of the Administrator through submission of documentation that savings have been achieved and may use the EPA Conservation Verification Protocol.

(3) All records of verification of energy savings shall be kept on file by the applicant for a period of 3 years. The Administrator may extend this period for cause at any time prior to the

end of 3 years by notifying the applicant in writing.

(4) The Administrator reserves the right to conduct independent reviews, analyses, or audits to ascertain that the verification is valid and correct. If the Administrator determines that the verification is not valid or correct, the Administrator may revise the allocation of allowances to an applicant or require the surrender of allowances from the applicant's Allowance Tracking System account.

(d) *Calculation of allowances to be allocated*. (1) In the case of an application submitted on the basis of qualified energy conservation measures, the sulfur dioxide emissions tonnage deemed avoided for any calendar year shall be equal to the product of:

$$\frac{(A)\times(B)}{2000\ \text{lbs./ton}}$$

(ROUNDED TO THE NEAREST TON)

where:

(A) = the kilowatt hours that were not, but would otherwise have been, supplied by the utility during such year in the absence of such qualified energy conservation measures.

(B) = 0.004 1bs. of sulfur dioxide per kilowatt hour.

(2) In the case of an application submitted on the basis of qualified renewable energy generation, the sulfur dioxide emissions tonnage deemed avoided for any calendar year shall be equal to the product of:

$$\frac{(A)\times(B)}{2000\ \text{lbs./ton}}$$

(ROUNDED TO THE NEAREST TON)

where:

(A) = the actual kilowatt hours of qualified renewable energy generated or purchased by the applicant (based on the qualified renewable energy generation portion for hybrid generation).

(B) = 0.004 lbs. of sulfur dioxide per kilowatt hour.

(e) *Certification by Applicant's Certifying Official*. (1) Certification of all application requirements, including the net income neutrality requirements, shall be made by a certifying official of the applicant upon such official's verification of all information and documentation submitted.

(2) The applicant shall submit a certification statement signed by the applicant's certifying official that reads ''I certify under penalty of law that I have personally examined and am familiar with the information submitted in this document and all its attachments. Based on my inquiry of those individuals with primary responsibility for obtaining the information, I certify that the information is to the best of my knowledge and belief true, accurate, and complete. I am aware that there are significant penalties for submitting false material information, or omitting material information, including the possibility of fine or imprisonment for violations.''

(f) *Certification by State Utility Regulatory Authority*. Applicants subject to the ratemaking jurisdiction of a State utility regulatory authority shall include in their applications a certification by the State utility regulatory authority's certifying official that it has reviewed the application, including supporting documentation, and finds it to be accurate, complete, and consistent with all applicable requirements of this subpart.

(g) *Time period to apply*. (1) Beginning no earlier than July 1, 1993, and no earlier than July 1 of each subsequent year, applicants may apply to the Administrator for allowances from the Reserve for emissions avoided in a previous year or years by use of qualified energy conservation measures or qualified renewable energy generation that became operational during the period of applicability; and

(2) Beginning no earlier than January 1, 1993, any applicant may apply to the Secretary of Energy for the Secretary's certification of net income neutrality where the application is based on the use of one or more qualified energy conservation measures.

(3) Applications will be received by the Administrator and the Secretary of Energy until January 2, 2010, pursuant to § 73.80(c), or until no allowances remain in the Reserve.

(h) *Submittal location*. Applicants shall submit one copy of the completed

Reserve application, not including the net income neutrality application, via registered mail to the Administrator at an address to be specified in later guidance. Applicants shall submit 10 copies of the net income neutrality application via registered mail to the Department of Energy at the following address: Department of Energy, Office of Conservation and Renewable Energy, Mail Stop CE–10, Room 6c–036, 1000 Independence Avenue, SW., Washington, DC 20585, Attn: Net Income Neutrality Certification.

[58 FR 3695, Jan. 11, 1993; 58 FR 40747, July 30, 1993]

§ 73.83 Secretary of Energy's action on net income neutrality applications.

(a) *First come, first served.* The Secretary of Energy will process and certify net income neutrality applications on a ''first-come, first served'' basis, according to the order, by date and time, in which they are received from either the applicant or, in the case of an application submitted to the Administrator and then forwarded to the Secretary, from the Administrator.

(b) *Deficient applications.* If the Secretary of Energy determines that the net income neutrality certification application does not meet the requirements of § 73.82 (a)(9) and (b), the Secretary will notify the applicant and the Administrator in writing of the deficiency. The applicant may then supply additional information or a new revised application as necessary for the Secretary to make a determination that the applicant meets the requirements of § 73.28(a)(9) and (b). Additional information or revised applications will be processed according to the date of receipt of such information or revisions.

(c) *Notification of approval.* The Secretary of Energy will review the net income neutrality application to determine whether it meets the requirements of § 73.82 (a)(9) and (b) and will certify this finding in writing to the applicant and to the Administrator within 60 calendar days of receipt of the net income neutrality application or a revised application, except that the Secretary may specify a later date for certification.

§ 73.84 Administrator's action on applications.

(a) *First come, first served.* The Administrator will process and approve Allowance Reserve applications, in whole or in part, on a ''first-come, first-served'' basis as established by the order of date of receipt, provided that the Administrator shall not allocate more than a total of 30,000 allowances in connection with applications based on any one of the four categories of qualified renewable energy generation enumerated in § 73.81(c)(2)(i) and appendix A(3.1–3.4).

(b) *Deficient applications.* An application is deficient and will be returned by the Administrator if it fails to meet the requirements set forth in this subpart, including those set forth in § 73.82. A revised application that is submitted after being returned for failure to meet the requirements of this subpart will be processed according to the date of receipt of the revised application.

(c) *Notification of approval.* Applications that the Administrator determines to be complete and correct will be conditionally approved, subject to notification to EPA of a net income neutrality certification from the Department of Energy, within 120 calendar days of receipt. Allowances from the Reserve will be awarded subject to the Department of Energy certification, or, if a DOE certification has already been issued to the applicant, allocated to applicants from such applications depending on the availability of allowances in the Reserve. In the event the initial application approval is conditioned upon the Secretary of Energy's certification, final approval will be granted upon notification of certification by the Secretary of Energy pursuant to § 73.83. The Administrator will notify applicants of final approval in writing.

(d) *Allocation of allowances.* Beginning in 1995, the Administrator will allocate allowances from the Reserve for each approved application into the applicant's account or accounts in the Allowance Tracking System. If the applicant does not have an account in the Allowance Tracking System, or wishes to open a new account for the allowances from the Reserve, an application

pursuant to § 73.31(c) must accompany the application for Reserve allowances.

(e) *Partial fulfillment of requests.* (1) In the event that the allowances available in the Reserve are less than the number that could otherwise be allocated to an approved applicant's account under the application as approved, the applicant will receive the allowances remaining in the Reserve.

(2) In the event that a subaccount is established by EPA, pursuant to § 73.85, and the applicant is making a request for allowances not included in the subaccount, the Allowance Reserve allocations for the approved applicant will be made, in addition to any that may be allocated pursuant to paragraph (f)(3) of this section, from any allowances remaining in the Reserve that are not contained in the subaccount.

(f) *Oversubscription of the Reserve.* (1) In the event that the Reserve becomes oversubscribed by more than one applicant on a single day, the allowances remaining in the Reserve will be distributed on a pro rata basis to applicants meeting the requirements of § 73.82.

(2) If Reserve applications are received by the Administrator after all allowances from the Reserve have been allocated, the Administrator will so notify the applicant within 5 business days after receipt of the application.

(3) In the event that applications meeting the requirements pursuant to § 73.82 are received by the Administrator prior to February 1, 1998, and

(i) All remaining allowances in the Reserve have been placed in a subaccount pursuant to § 73.85; and

(ii) The applicant is not eligible for an allocation of allowances from the subaccount; the application will be placed on a waiting list in order of receipt.

(iii) The Administrator will notify the applicant of such action within 5 business days after receipt of the application.

(4) If any allowances are returned to the Reserve after February 1, 1998 pursuant to § 73.85(c), the Administrator will review the wait-listed applications in order of receipt and allocate any remaining allowances to the approved applicants in the order of their receipt until no more allowances remain in the Reserve.

(g) *Applications for allowances based on the same avoided emissions from the same energy conservation measures or renewable energy generation.*(1) The Administrator will not award allowances to more than one applicant for the same avoided emissions from the same energy conservation measure or the same qualified renewable energy generation, and will process and act on such duplicative applications on a ''first-come, first-serve'' basis as determined by the order of date of receipt.

(2) Any allowances awarded pursuant to two or more applications received on the same date based on the same avoided emissions from the same energy conservation measure or the same renewable electric generation will be divided equally between all such applicants unless the Administrator is otherwise directed by all such applicants.

§ 73.85 Administrator review of the reserve program.

(a) *Administrator review of the Reserve and creation of a subaccount.* In the event that an allocation of allowances from the Reserve pursuant to a pending application would bring the total number of allowances allocated to a number greater than 240,000, the Administrator will review the distribution of all allowances allocated as follows:

(1) If at least 60,000 allowances have been allocated from the Reserve for *each* of

(i) Qualified energy conservation measures, and

(ii) Qualified renewable energy generation, allocations of allowances will continue pursuant to § 73.82, until no more allowances remain in the Reserve.

(2) If fewer than 60,000 allowances have been allocated for either qualified energy conservation measures or qualified renewable energy generation, the Administrator will establish a subaccount for the allocation of allowances for applications based on the category for which fewer than 60,000 allowances have been allocated. The subaccount will contain allowances equal to 60,000 less the number of allowances previously allocated for such category.

(b) *Allocation of allowances from the subaccount.* The Administrator will allocate allowances from the subaccount

established pursuant to paragraph (a) of this section to approved and DOE certified applicants that fulfill the requirements of this subpart, including § 73.82 and § 73.83, on a ''first-come, first-served basis'', pursuant to § 73.84(a), until the subaccount is depleted or closed pursuant to paragraph (c) of this section.

(c) *Closure of the subaccount.* Unless all allowances in the subaccount have been previously allocated, the Administrator will terminate the subaccount not later than February 1, 1998 and return any allowances remaining in the subaccount to the general account of the Reserve. After all Reserve allocations have been made to applicants with approved and DOE certified applications subject to § 73.84(f)(3), the Administrator will allocate any remaining allowances to any applicants that meet the requirements of this subpart, including § 73.82 and § 73.83, on a ''first-come, first-served'' basis, pursuant to § 73.84.

§ 73.86 State regulatory autonomy.

Nothing in this subpart shall preclude a State or State regulatory authority from providing additional incentives to utilities to encourage investment in any conservation measures or renewable energy generation.

APPENDIX A TO SUBPART F OF PART 73—LIST OF QUALIFIED ENERGY CONSERVATION MEASURES, QUALIFIED RENEWABLE GENERATION, AND MEASURES APPLICABLE FOR REDUCED UTILIZATION

1. DEMAND-SIDE MEASURES APPLICABLE FOR THE CONSERVATION AND RENEWABLE ENERGY RESERVE PROGRAM OR REDUCED UTILIZATION

The following listed measures are approved as ''qualified energy conservation measures'' for purposes of the Conservation and Renewable Energy Reserve Program or reduced utilization qualified energy conservation plans under § 72.43 of this chapter. Measures not appearing on the list may also be qualified conservation measures if they meet the requirements specified in § 73.81(a) of this part.

1.1 Residential

1.1.1 Space Conditioning

- Electric furnace improvements (intermittent ignition, automatic vent dampers, and heating element change-outs)
- Air conditioner (central and room) upgrades/replacements
- Heat pump (ground source, solar assisted, and conventional) upgrades/replacements
- Cycling of air conditioners and heat pumps
- Natural ventilation
- Heat recovery ventilation
- Clock thermostats
- Setback thermostats
- Geothermal steam direct use
- Improved equipment controls
- Solar assisted space conditioning (ventilation, air-conditioning, and desiccant cooling)
- Passive solar designs
- Air conditioner and heat pump clean and tune-up
- Heat pipes
- Whole house fans
- High efficiency fans and motors
- Hydronic pump insulation
- Register relocation
- Register size and blade configuration
- Return air location
- Duct sizing
- Duct insulation
- Duct sealing
- Duct cleaning
- Shade tree planting

1.1.2 Water Heating

- Electric water heater upgrades/replacements
- Electric water heater tank wraps/blankets
- Low-flow showerheads and fittings
- Solar heating and pre-heat units
- Geothermal heating and pre-heat units
- Heat traps
- Water heater heat pumps
- Recirculation pumps
- Setback thermostats
- Water heater cycling control
- Solar heating for swimming pools
- Pipe wrap insulation

1.1.3 Lighting

- Lamp replacement
- Dimmers
- Motion detectors and occupancy sensors
- Photovoltaic lighting
- Fixture replacement
- Outdoor lighting controls

1.1.4 Building Envelope

- Attic, basement, ceiling, and wall insulation
- Passive solar building systems
- Exterior roof insulation

- Exterior wall insulation
- Exterior wall insulation bordering unheated space (e.g., a garage)
- Knee wall insulation in attic
- Floor insulation
- Perimeter insulation
- Storm windows/doors
- Caulking/weatherstripping
- Multi-glazed inserts for sliding glass doors
- Sliding door replacements
- Installation of French doors
- Hollow core door replacement
- Radiant barriers
- Window vent conversions
- Window replacement
- Window shade screens
- Low-e windows
- Window reduction
- Attic ventilation
- Whole house fan
- Passive solar design

1.1.5 Other Appliances

- Refrigerator replacements
- Freezer replacements
- Oven/range replacements
- Dishwasher replacements
- Clothes washer replacements
- Clothes dryer replacements
- Customer located power generation based on photovoltaic, solar thermal, biomass, wind or geothermal resources
- Swimming pool pump replacements
- Gasket replacements
- Maintenance/coil cleaning

1.2 Commercial

1.2.1 Heating/Ventilation/Air Conditioning (HVAC)

- Heat pump replacement
- Fan motor efficiency
- Resizing of chillers
- Heat pipe retrofits in air conditioning units
- Dehumidifiers
- Steam trap insulation
- Radiator thermostatic valves
- Variable speed drive on fan motor
- Solar assisted HVAC including ventilation, chillers, heat pumps, and desiccants
- HVAC piping insulation
- HVAC ductwork insulation
- Boiler insulation
- Automatic night setback
- Automatic economizer cooling
- Outside air control
- Hot and cold deck automatic reset
- Reheat system primary air optimization
- Process heat recovery
- Deadband thermostat
- Timeclocks on circulating pumps
- Chiller system
- Increase condensing unit efficiency
- Separate make-up air for exhaust hoods
- Variable air volume system
- Direct tower cooling (chiller strainer cycle)
- Multiple chiller control
- Radiant heating
- Evaporative roof surface cooling
- Cooling tower flow control
- Ceiling fans
- Evaporative cooling
- Direct expansion cooling system
- Heat recovery ventilation (water and air-source)
- Set-back controls for heating/cooling
- Make-up air control
- Manual fan switches
- Energy saving exhaust hood
- Night flushing
- Spot radiant heating
- Terminal regulated air volume control scheme
- Variable speed motors for HVAC system
- Waterside economizers
- Airside economizer
- Gray water systems
- Well water for cooling

1.2.2 Building envelope

- Insulation
- Wall insulation
- Floor/slab insulation
- Roof insulation
- Window and door upgrades, replacements, and films (to reduce solar heat gains)
- Passive solar design
- Earth berming
- Shading devices and tree planting
- High reflectivity roof coating
- Evaporative cooling
- Infiltration reduction
- Weatherstripping
- Caulking
- Low-e windows
- Multi-glazed windows
- Replace glazing with insulated walls
- Thermal break window frames
- Tinted glazing
- Vapor barrier
- Vestibule entry

1.2.3 Lighting

- Electronic ballast replacements
- Delamping
- Reflectors
- Occupancy sensors
- Daylighting with controls
- Photovoltaic lighting
- Efficient exterior lighting
- Manual selective switching
- Efficient exit signs
- Daylighting construction
- Cathode cutout ballasts
- High intensity discharge luminaries
- Outdoor light timeclock and photocell

1.2.4 Refrigeration

- Refrigerator replacement
- Freezer replacement

• Optimize heat gains to refrigerated space
• Optimize defrost control
• Refrigeration pressure optimization control
• High efficiency compressors
• Anti-condensate heater control
• Floating head pressure
• Hot gas defrost
• Parallel unequal compressors
• Variable speed compressors
• Water cooler controls
• Waste heat utilization
• Air doors on refrigeration equipment

1.2.5 Water Heating

• Electric water heating upgrades/replacements
• Electric water heater wraps/blankets
• Pipe insulation
• Solar heating and/or pre-heat units
• Geothermal heating and/or pre-heat units
• Circulating pump control
• Point-of-use water heater
• Heat recovery domestic water heater (DWH) system
• Chemical dishwashing system
• End-use reduction using low-flow fittings

1.2.6 Other end-uses and miscellaneous

• Energy management control systems for building operations
• Customer located power based on photovoltaic, solar thermal, biomass, wind, and geothermal resources
• Energy efficient office equipment
• Customer-owned transformer upgrades and proper sizing

1.3 Industial

1.3.1 Motors

• Retire inefficient motors and replace with energy efficient motors, including the use of electronic adjustable speed or variable frequency drives
• Rebuild motors to operate more efficiently through greater contamination protection and improved magnetic materials
• Install self-starters
• Replace improperly sized motors

1.3.2 Lighting

• Electronic ballast replacement/improvement
• Electromagnetic ballast upgrade
• Installation of reflectors
• Substitution of lamps with built-in automatic cathode cut-out switches
• Modify ballast circuits with additional impedance devices
• Metal halide and high pressure sodium lamp retrofits
• High pressure sodium retrofits
• Daylighting with controls
• Occupancy sensors
• Delamping
• Photovoltaic lighting
• Two step and dimmable high intensity discharge ballast

1.3.3 Heating/Ventilation/Air Conditioning (HVAC)

• Heat pump replacement/upgrade
• Furnace upgrade/replacement
• Fan motor efficiency
• Resizing of chillers
• Heat pipe retrofits on air conditioners
• Variable speed drive on fan motor
• Solar assisted HVAC including ventilation, chillers, heat pumps and desiccants

1.3.4 Industrial Processes

• Upgrades in heat transfer equipment
• Insulation and burner upgrades for industrial furnaces/ovens/boilers to reduce electricity loads on motors and fans
• Insulation and redesign of piping
• Upgrades/retrofits in condenser/evaporation equipment
• Process air and water filtration for improved efficiency
• Upgrades of catalytic combustors
• Solar process heat
• Customer located power based on photovoltaic, solar thermal, biomass, wind, and geothermal resources
• Power factor controllers
• Utilization of waste gas fuels
• Steam line and steam trap repairs/upgrades
• Compressed air system improvements/repairs
• Industrial process heat pump
• Optimization of equipment lubrication or maintenance
• Resizing of process equipment for optimal energy efficiency
• Use of unique thermodynamic power cycles

1.3.5 Building Envelope

• Insulation of ceiling, walls, and ducts
• Window and door replacement/upgrade, including thermal energy barriers
• Caulking/weatherstripping

1.3.6 Water Heating

• Electric water heater upgrades/replacements
• Electric water heater wraps/blankets
• Pipe insulation
• Low-flow showerheads and fittings
• Solar heating and pre-heat units
• Geothermal heating and pre-heat units

1.3.7 Other End-uses and miscellaneous

• Refrigeration system retrofit/replacement
• Energy management control systems and end use metering
• Customer-owned transformer retrofits/replacements and proper sizing

1.4 Agricultural

1.4.1 Space Conditioning

- Building envelope measures
- Efficient HVAC equipment
- Heat pipe retrofit on air conditioners
- System and control measures
- Solar assisted HVAC including ventilation, chillers, heat pumps, and desiccants
- Air-source and geothermal heat pumps replacement/upgrades

1.4.2 Water heating

- Upgrades/replacements
- Water heater wraps/blankets
- Pipe insulation
- Low-flow showerheads and fittings
- Solart heating and/or pre-hear units
- Geothermal heating and/or pre-heat units

1.4.3 Lighting

- Electronic ballast replacements
- Delamping
- Reflectors
- Occupancy sensors
- Daylighting with controls
- Photovoltaic lighting
- Outdoor lighting controls

1.4.4 Pumping/Irrigation

- Pump upgrades/retrofits
- Computerized pump control systems
- Irrigation load management strategies
- Irrigation pumping plants
- Computer irrigation control
- Surge irrigation
- Computerized scheduling of irrigation
- Drip irrigation systems

1.4.5 Motors

- Retire inefficient motors and replace with energy efficient motors, including the use of electronic adjustable speed and variable frequency drives
- Rebuild motors to operate more efficiently through greater contamination protection and improved magnetic materials
- Install self-starters
- Replace improperly sized motors

1.4.6 Other end uses

- Ventilation fans
- Cooling and refrigeration system upgrades
- Grain drying using unheated air
- Grain drying using low temperature electric
- Customer-owned transformer retrofits/replacements and proper sizing
- Programmable controllers for electrical farm equipment
- Controlled livestock ventilation
- Water heating for production agriculture
- Milk cooler heat exchangers
- Direct expansion/ice bank milk cooling
- Low energy precision application systems
- Heat pump crop drying

1.5 Government Services Sector

1.5.1 Streetlighting

- Replace incandescent and mercury vapor lamps with high pressure sodium and metal halide

1.5.2 Other

- Energy efficiency improvements in motors, pumps, and controls for water supply and waste water treatment
- District heating and cooling measures derived for cogeneration that result in electricity savings

2. SUPPLY-SIDE MEASURES APPLICABLE FOR REDUCED UTILIZATION

Supply-side measures that may be approved for purposes of reduced utilization plans under §72.43 include the following:

2.1 Generation efficiency

- Heat rate improvement programs
- Availability improvement programs
- Coal cleaning measures that improve boiler efficiency
- Turbine improvements
- Boiler improvements
- Control improvements, including artificial intelligence and expert systems
- Distributed control—local (real-time) versus central (delayed)
- Equipment monitoring
- Performance monitoring
- Preventive maintenance
- Additional or improved heat recovery
- Sliding/variable pressure operations
- Adjustable speed drives
- Improved personnel training to improve man/machine interface

2.2 Transmission and distribution efficiency

- High efficiency transformer switchouts using amorphous core and silicon steel technologies
- Low-loss windings
- Innovative cable insulation
- Reactive power dispatch optimization
- Power factor control
- Primary feeder reconfiguration
- Primary distribution voltage upgrades
- High efficiency substation transformers
- Controllable series capacitors
- Real-time distribution data acquisition analysis and control systems
- Conservation voltage regulation

3. RENEWABLE ENERGY GENERATION MEASURES APPLICABLE FOR THE CONSERVATION AND RENEWABLE ENERGY RESERVE PROGRAM

The following listed measures are approved as ''qualified renewable energy generation'' for purposes of the Conservation and Renewable Energy Reserve Program. Measures not appearing on the list may also be qualified renewable energy generation measures if they meet the requirements specified in § 73.81.

3.1 Biomass resources

• Combustible energy-producing materials from biological sources which include: wood, plant residues, biological wastes, landfill gas, energy crops, and eligible components of municipal solid waste.

3.2 Solar resources

• Solar thermal systems and the non-fossil fuel portion of solar thermal hybrid systems

• Grid and non-grid connected photovoltaic systems, including systems added for voltage or capacity augmentation of a distribution grid.

3.4 Geothermal resources

• Hydrothermal or geopressurized resources used for dry steam, flash steam, or binary cycle generation of electricity.

3.5 Wind resources

• Grid-connected and non-grid-connected wind farms

• Individual wind-driven electrical generating turbines

Subpart G—Small Diesel Refineries

§ 73.90 Allowance allocations for small diesel refineries.

(a) *Initial certification of eligibility.* The certifying official of a refinery that seeks allowances under this section shall apply for certification of its facility eligibility prior to or accompanying a request for allowances under paragraph (d) of this section. A completed application for certification, submitted to the address in § 73.13 of this chapter, shall include the following:

(1) Photocopies of Form EIA–810 for each month of calendar years 1988 through 1990 for the refinery;

(2) Photocopies of Form EIA–810 for each month of calendar years 1988 through 1990 for each refinery owned or controlled by the refiner that owns or controls the refinery seeking certification; and

(3) A letter certified by the certifying official that the submitted photocopies are exact duplicates of those forms filed with the Department of Energy for 1988 through 1990.

(b) *Request for allowances.* (1) In addition to the application for certification, prior to, or accompanying, the request for allowances, the certifying official for the refinery shall submit an Allowance Tracking System New Account/New Authorized Account Representative Form.

(2) The request for allowances shall be submitted to the address in § 72.13 and shall include the following information:

(i) Certification that all motor fuel produced by the refinery for which allowances are claimed meets the requirements of subsection 211(i) of the Clean Air Act;

(ii) For calendar year 1993 desulfurized diesel fuel, photocopies of Form 810 for October, November and December 1993;

(iii) For calendar years 1994 through 1999, inclusive, photocopies of Form 810 for each month in the respective calendar year.

(3) For joint ventures, each eligible refinery shall submit a separate application under paragraph (b)(2) of this section. Each application must include the diesel fuel throughput applicable to the joint agreement and the requested distribution of allowances that would be allocated to the joint agreement. If the applications for refineries involved in the joint agreement are inconsistent as to the throughput of diesel fuel applicable to the joint agreement or as to the distribution of the allowances, all involved applications will be considered void for purposes of the joint agreement.

(4) The certifying official shall submit all requests for allowances by April 1 of the calendar year following the year in which the diesel fuel was desulfurized to the Director, Acid Rain Division, under the procedures set forth in § 73.13 of this part.

(c) *Allowance allocation.* The Administrator will allocate allowances to the eligible refinery upon satisfactory submittal of information under paragraphs

(a) and (b) of this section in the amount calculated according to the following equations. Such allowances will be allocated to the refinery's non-unit subaccount for the calendar year in which the application is made.

(1) Allowances allocated under this section to any eligible refinery will be limited to the tons of SO_2 attributable to the desulfurization of diesel fuel at the refinery. (2) The refinery will be allocated allowances for a calendar year and, in the case of 1993, for the period October 1 through December 31, calculated according to the following equation, but not to exceed 1500 for any calendar year:

$$\textit{Allowances Requested} = \frac{\begin{bmatrix} (a) \\ \textit{Diesel Fuel Production} \end{bmatrix} x \begin{bmatrix} (b) \\ (302) \end{bmatrix} x \begin{bmatrix} (c) \\ (0.00224) \end{bmatrix} x \begin{bmatrix} (d) \\ (2) \end{bmatrix}}{\begin{bmatrix} 2000 \\ (e) \end{bmatrix}}$$

where:

a = diesel fuel in barrels for the year (or for October 1 through December 31 for 1993)
b = lbs per barrel of diesel
c = lbs of sulfur per lbs of diesel
d = lbs of SO_2 per lbs of sulfur
e = lbs per short ton

(3) If applications for a given year request, in the aggregate, more than 35,000 allowances, the Administrator will allocate allowances to each refinery in the amount equal to the lesser of 1500 or:

$$\text{Refinery Allowances} = \text{the lesser of} \begin{bmatrix} \text{Allowances Requested} \times \dfrac{35{,}000}{\text{Total Allowances Requested}} \\ \text{or} \\ 1{,}500 \end{bmatrix}$$

[58 FR 15716, Mar. 23, 1993; 58 FR 33770, June 21, 1993; 62 FR 55486, Oct. 24, 1997]

PART 74—SULFUR DIOXIDE OPT-INS

Subpart A—Background and Summary

Sec.
74.1 Purpose and scope.
74.2 Applicability.
74.3 Relationship to the Acid Rain program requirements.
74.4 Designated representative.

Subpart B—Permitting Procedures

74.10 Roles—EPA and permitting authority.
74.12 Opt-in permit contents.
74.14 Opt-in permit process.
74.16 Application requirements for combustion sources.
74.17 Application requirements for process sources. [Reserved]
74.18 Withdrawal.
74.19 Revision and renewal of opt-in permit.

Subpart C—Allowance Calculations for Combustion Sources

74.20 Data for baseline and alternative baseline.
74.22 Actual SO_2 emissions rate.
74.23 1985 Allowable SO_2 emissions rate.
74.24 Current allowable SO_2 emissions rate.
74.25 Current promulgated SO_2 emissions limit.
74.26 Allocation formula.
74.28 Allowance allocation for combustion sources becoming opt-in sources on a date other than January 1.

Subpart D—Allowance Calculations for Process Sources [Reserved]

Subpart E—Allowance Tracking and Transfer and End of Year Compliance

74.40 Establishment of opt-in source allowance accounts.
74.41 Identifying allowances.
74.42 Limitation on transfers.
74.43 Annual compliance certification report.
74.44 Reduced utilization for combustion sources.
74.45 Reduced utilization for process sources. [Reserved]
74.46 Opt-in source permanent shutdown, reconstruction, or change in affected status.
74.47 Transfer of allowances from the replacement of thermal energy—combustion sources.
74.48 Transfer of allowances from the replacement of thermal energy—process sources. [Reserved]
74.49 Calculation for deducting allowances.
74.50 Deducting opt-in source allowances from ATS accounts.

Subpart F—Monitoring Emissions: Combustion Sources

74.60 Monitoring requirements.
74.61 Monitoring plan.

Subpart G—Monitoring Emissions: Process Sources [Reserved]

AUTHORITY: 42 U.S.C. 7601 and 7651 *et seq.*

SOURCE: 60 FR 17115, Apr. 4, 1995, unless otherwise noted.

Subpart A—Background and Summary

§ 74.1 Purpose and scope.

The purpose of this part is to establish the requirements and procedures for:

(a) The election of a combustion or process source that emits sulfur dioxide to become an affected unit under the Acid Rain Program, pursuant to section 410 of title IV of the Clean Air Act, 42 U.S.C. 7401, *et seq.*, as amended by Public Law 101–549 (November 15, 1990); and

(b) Issuing and modifying operating permits; certifying monitors; and allocating, tracking, transferring, surrendering and deducting allowances for combustion or process sources electing to become affected units.

§ 74.2 Applicability.

Combustion or process sources that are not affected units under § 72.6 of this chapter and that are operating and are located in the 48 contiguous States or the District of Columbia may submit an opt-in permit application to become opt-in sources upon issuance of an opt-in permit. Units for which an exemption under § 72.7 or § 72.8 of this chapter is in effect and combustion or process sources that are not operating are not eligible to submit an opt-in permit application to become opt-in sources.

[60 FR 17115, Apr. 4, 1995, as amended at 62 FR 55487, Oct. 24, 1997; 66 FR 12978, Mar. 1, 2001]

§ 74.3 Relationship to the Acid Rain program requirements.

(a) *General.* (1) For purposes of applying parts 72, 73, 75, 77 and 78, each opt-in source shall be treated as an affected unit.

(2) Subpart A, B, G, and H of part 72 of this chapter, including §§ 72.2 (definitions), 72.3 (measurements, abbreviations, and acronyms), 72.4 (Federal authority), 72.5 (State authority), 72.6 (applicability), 72.7 (New units exemption), 72.8 (Retired units exemption), 72.9 (Standard Requirements), 72.10 (availability of information), and 72.11 (computation of time), shall apply to this part.

(b) *Permits.* The permitting authority shall act in accordance with this part and parts 70, 71, and 72 of this chapter in issuing or denying an opt-in permit and incorporating it into a combustion or process source's operating permit. To the extent that any requirements of this part, part 72, and part 78 of this chapter are inconsistent with the requirements of parts 70 and 71 of this chapter, the requirements of this part, part 72, and part 78 of this chapter shall take precedence and shall govern the issuance, denials, revision, reopening, renewal, and appeal of the opt-in permit.

(c) *Appeals.* The procedures for appeals of decisions of the Administrator under this part are contained in part 78 of this chapter.

(d) *Allowances.* A combustion or process source that becomes an affected unit under this part shall be subject to

all the requirements of subparts C and D of part 73 of this chapter, consistent with subpart E of this part.

(e) *Excess emissions*. A combustion or process source that becomes an affected unit under this part shall be subject to the requirements of part 77 of this chapter applicable to excess emissions of sulfur dioxide and shall not be subject to the requirements of part 77 of this chapter applicable to excess emissions of nitrogen oxides.

(f) *Monitoring*. A combustion or process source that becomes an affected unit under this part shall be subject to all the requirements of part 75, consistent with subparts F and G of this part.

[60 FR 17115, Apr. 4, 1995, as amended at 63 FR 18841, Apr. 16, 1998]

§ 74.4 Designated representative.

(a) The provisions of subpart B of part 72 of this chapter shall apply to the designated representative of an opt-in source.

(b) If a combustion or process source is located at the same source as one or more affected units, the combustion or process source shall have the same designated representative as the other affected units at the source.

[60 FR 17115, Apr. 4, 1995, as amended at 63 FR 18841, Apr. 16, 1998; 71 FR 25379, Apr. 28, 2006]

Subpart B—Permitting Procedures

§ 74.10 Roles—EPA and permitting authority.

(a) *Administrator responsibilities*. The Administrator shall be responsible for the following activities under the opt-in provisions of the Acid Rain Program:

(1) *Calculating* the baseline or alternative baseline and allowance allocation, and allocating allowances for combustion or process sources that become affected units under this part;

(2) Certifying or recertifying monitoring systems for combustion or process sources as provided under § 74.20 of this chapter;

(3) Establishing allowance accounts, tracking allowances, assessing end-of-year compliance, determining reduced utilization, approving thermal energy transfer and accounting for the replacement of thermal energy, closing accounts for opt-in sources that shut down, are reconstructed, become affected under § 72.6 of this chapter, or fail to renew their opt-in permit, and deducting allowances as provided under subpart E of this part; and

(4) Ensuring that the opt-in source meets all withdrawal conditions prior to withdrawal from the Acid Rain Program as provided under § 74.18; and

(5) Approving and disapproving the request to withdraw from the Acid Rain Program.

(b) *Permitting authority responsibilities*. The permitting authority shall be responsible for the following activities:

(1) Issuing the draft and final opt-in permit;

(2) Revising and renewing the opt-in permit; and

(3) Terminating the opt-in permit for an opt-in source as provided in § 74.18 (withdrawal), § 74.46 (shutdown, reconstruction or change in affected status) and § 74.50 (deducting allowances).

[60 FR 17115, Apr. 4, 1995, as amended at 63 FR 18841, Apr. 16, 1998]

§ 74.12 Opt-in permit contents.

(a) The opt-in permit shall be included in the Acid Rain permit.

(b) *Scope*. The opt-in permit provisions shall apply only to the opt-in source and not to any other affected units.

(c) *Contents*. Each opt-in permit, including any draft or proposed opt-in permit, shall contain the following elements in a format specified by the Administrator:

(1) All elements required for a complete opt-in permit application as provided under § 74.16 for combustion sources or under § 74.17 for process sources or, if applicable, all elements required for a complete opt-in permit renewal application as provided in § 74.19 for combustion sources or under § 74.17 for process sources;

(2) The allowance allocation for the opt-in source as determined by the Administrator under subpart C of this part for combustion sources or subpart D of this part for process sources;

(3) The standard permit requirements as provided under § 72.9 of this chapter, except that the provisions in § 72.9(d) of

this chapter shall not be included in the opt-in permit; and

(4) *Termination*. The provision that participation of a combustion or process source in the Acid Rain Program may be terminated only in accordance with § 74.18 (withdrawal), § 74.46 (shutdown, reconstruction, or change in affected status), and § 74.50 (deducting allowances).

(d) Each opt-in permit is deemed to incorporate the definitions of terms under § 72.2 of this chapter.

(e) *Permit shield*. Each opt-in source operated in accordance with the opt-in permit that governs the opt-in source and that was issued in compliance with title IV of the Act, as provided in this part and parts 72, 73, 75, 77, and 78 of this chapter, shall be deemed to be operating in compliance with the Acid Rain Program, except as provided in § 72.9(g)(6) of this chapter.

(f) *Term of opt-in permit*. An opt-in permit shall be issued for a period of 5 years and may be renewed in accordance with § 74.19; provided

(1) If an opt-in permit is issued prior to January 1, 2000, then the opt-in permit may, at the option of the permitting authority, expire on December 31, 1999; and

(2) If an affected unit with an Acid Rain permit is located at the same source as the combustion source, the combustion source's opt-in permit may, at the option of the permitting authority, expire on the same date as the affected unit's Acid Rain permit expires.

§ 74.14 Opt-in permit process.

(a) *Submission*. The designated representative of a combustion or process source may submit an opt-in permit application and a monitoring plan to the Administrator at any time for any combustion or process source that is operating.

(b) *Issuance or denial of opt-in permits*. The permitting authority shall issue or deny opt-in permits or revisions of opt-in permits in accordance with the procedures in parts 70 and 71 of this chapter and subparts F and G of part 72 of this chapter, except as provided in this section.

(1) *Supplemental information*. Regardless of whether the opt-in permit application is complete, the Administrator or the permitting authority may request submission of any additional information that the Administrator or the permitting authority determines to be necessary in order to review the opt-in permit application or to issue an opt-in permit.

(2) *Interim review of monitoring plan*. The Administrator will determine, on an interim basis, the sufficiency of the monitoring plan, accompanying the opt-in permit application. A monitoring plan is sufficient, for purposes of interim review, if the plan appears to contain information demonstrating that all SO_2 emissions, NO_X emissions, CO_2 emissions, and opacity of the combustion or process source are monitored and reported in accordance with part 75 of this chapter. This interim review of sufficiency shall not be construed as the approval or disapproval of the combustion or process source's monitoring system.

(3) *Issuance of draft opt-in permit*. After the Administrator determines whether the combustion or process source's monitoring plan is sufficient under paragraph (b)(2) of this section, the permitting authority shall serve the draft opt-in permit or the denial of a draft permit or the draft opt-in permit revisions or the denial of draft opt-in permit revisions on the designated representative of the combustion or process source submitting an opt-in permit application. A draft permit or draft opt-in permit revision shall not be served or issued if the monitoring plan is determined not to be sufficient.

(4) *Confirmation by source of intention to opt-in*. Within 21 calendar days from the date of service of the draft opt-in permit or the denial of the draft opt-in permit, the designated representative of a combustion or process source submitting an opt-in permit application must submit to the Administrator, in writing, a confirmation or recision of the source's intention to become an opt-in source under this part. The Administrator shall treat the failure to make a timely submission as a recision of the source's intention to become an opt-in source and as a withdrawal of the opt-in permit application.

(5) *Issuance of draft opt-in permit*. If the designated representative confirms

the combustion or process source's intention to opt in under paragraph (b)(4) of this section, the permitting authority will give notice of the draft opt-in permit or denial of the draft opt-in permit and an opportunity for public comment, as provided under §72.65 of this chapter with regard to a draft permit or denial of a draft permit if the Administrator is the permitting authority or as provided in accordance with part 70 of this chapter with regard to a draft permit or the denial of a draft permit if the State is the permitting authority.

(6) *Permit decision deadlines.* (i) If the Administrator is the permitting authority, an opt-in permit will be issued or denied within 12 months of receipt of a complete opt-in permit application.

(ii) If the State is the permitting authority, an opt-in permit will be issued or denied within 18 months of receipt of a complete opt-in permit application or such lesser time approved for operating permits under part 70 of this chapter.

(7) *Withdrawal of opt-in permit application.* A combustion or process source may withdraw its opt-in permit application at any time prior to the issuance of the final opt-in permit. Once a combustion or process source withdraws its application, in order to re-apply, it must submit a new opt-in permit application in accordance with §74.16 for combustion sources or §74.17 for process sources.

(c) [Reserved]

(d) *Entry into Acid Rain Program*—(1) *Effective date.* The effective date of the opt-in permit shall be the January 1, April 1, July 1, or October 1 for a combustion or process source providing monthly data under §74.20, or January 1 for a combustion or process source providing annual data under §74.20, following the later of the issuance of the opt-in permit by the permitting authority or the completion of monitoring system certification, as provided in subpart F of this part for combustion sources or subpart G of this part for process sources. The combustion or process source shall become an opt-in source and an affected unit as of the effective date of the opt-in permit.

(2) *Allowance allocation.* After the opt-in permit becomes effective, the Administrator will allocate allowances to the opt-in source as provided in §74.40. If the effective date of the opt-in permit is not January 1, allowances for the first year shall be pro-rated as provided in §74.28.

(e) *Expiration of opt-in permit.* An opt-in permit that is issued before the completion of monitoring system certification under subpart F of this part for combustion sources or under subpart G of this part for process sources shall expire 180 days after the permitting authority serves the opt-in permit on the designated representative of the combustion or process source governed by the opt-in permit, unless such monitoring system certification is complete. The designated representative may petition the Administrator to extend this time period in which an opt-in permit expires and must explain in the petition why such an extension should be granted. The designated representative of a combustion source governed by an expired opt-in permit and that seeks to become an opt-in source must submit a new opt-in permit application.

[60 FR 17115, Apr. 4, 1995, as amended at 63 FR 18841, Apr. 16, 1998]

§74.16 Application requirements for combustion sources.

(a) *Opt-in permit application.* Each complete opt-in permit application for a combustion source shall contain the following elements in a format prescribed by the Administrator:

(1) Identification of the combustion source, including company name, plant name, plant site address, mailing address, description of the combustion source, and information and diagrams on the combustion source's configuration;

(2) Identification of the designated representative, including name, address, telephone number, and facsimile number;

(3) The year and month the combustion source commenced operation;

(4) The number of hours the combustion source operated in the six months preceding the opt-in permit application and supporting documentation;

(5) The baseline or alternative baseline data under §74.20;

(6) The actual SO_2 emissions rate under §74.22;

(7) The allowable 1985 SO_2 emissions rate under § 74.23;

(8) The current allowable SO_2 emissions rate under § 74.24;

(9) The current promulgated SO_2 emissions rate under § 74.25;

(10) If the combustion source seeks to qualify for a transfer of allowances from the replacement of thermal energy, a thermal energy plan as provided in § 74.47 for combustion sources; and

(11) A statement whether the combustion source was previously an affected unit under this part;

(12) A statement that the combustion source is not an affected unit under § 72.6 of this chapter and does not have an exemption under § 72.7, § 72.8, or § 72.14 of this chapter;

(13) A complete compliance plan for SO_2 under § 72.40 of this chapter; and

(14) The following statement signed by the designated representative of the combustion source: ''I certify that the data submitted under subpart C of part 74 reflects actual operations of the combustion source and has not been adjusted in any way.''

(b) *Accompanying documents.* The designated representative of the combustion source shall submit a monitoring plan in accordance with § 74.61.

[60 FR 17115, Apr. 4, 1995, as amended at 63 FR 18841, Apr. 16, 1998]

§ 74.17 Application requirements for process sources. [Reserved]

§ 74.18 Withdrawal.

(a) *Withdrawal through administrative amendment.* An opt-in source may request to withdraw from the Acid Rain Program by submitting an administrative amendment under § 72.83 of this chapter; provided that the amendment will be treated as received by the permitting authority upon issuance of the notification of the acceptance of the request to withdraw under paragraph (f)(1) of this section.

(b) *Requesting withdrawal.* To withdraw from the Acid Rain Program, the designated representative of an opt-in source shall submit to the Administrator and the permitting authority a request to withdraw effective January 1 of the year after the year in which the submission is made. The submission shall be made no later than December 1 of the calendar year preceding the effective date of withdrawal.

(c) *Conditions for withdrawal.* In order for an opt-in source to withdraw, the following conditions must be met:

(1) By no later than January 30 of the first calendar year in which the withdrawal is to be effective, the designated representative must submit to the Administrator an annual compliance certification report pursuant to § 74.43.

(2) If the opt-in source has excess emissions in the calendar year before the year for which the withdrawal is to be in effect, the designated representative must submit an offset plan for excess emissions, pursuant to part 77 of this chapter, that provides for immediate deduction of allowances.

(d) *Administrator's action on withdrawal.* After the opt-in source meets the requirements for withdrawal under paragraphs (b) and (c) of this section, the Administrator will deduct allowances required to be deducted under § 73.35 of this chapter and part 77 of this chapter and allowances equal in number to and with the same or earlier compliance use date as those allocated under § 74.40 for the first year for which the withdrawal is to be effective and all subsequent years.

(e) *Opt-in source's prior violations.* An opt-in source that withdraws from the Acid Rain Program shall comply with all requirements under the Acid Rain Program concerning all years for which the opt-in source was an affected unit, even if such requirements arise, or must be complied with after the withdrawal takes effect.

(f) *Notification.* (1) After the requirements for withdrawal under paragraphs (b) and (c) of this section are met and after the Administrator's action on withdrawal under paragraph (d) of this section is complete, the Administrator will issue a notification to the permitting authority and the designated representative of the opt-in source of the acceptance of the opt-in source's request to withdraw.

(2) If the requirements for withdrawal under paragraphs (b) and (c) of this section are not met or the Administrator's action under paragraph (d) of this section cannot be completed, the

Administrator will issue a notification to the permitting authority and the designated representative of the opt-in source that the opt-in source's request to withdraw is denied. If the opt-in source's request to withdraw is denied, the opt-in source shall remain in the Opt-in Program and shall remain subject to the requirements for opt-in sources contained in this part.

(g) *Permit amendment.* (1) After the Administrator issues a notification under paragraph (f)(1) of this section that the requirements for withdrawal have been met (including the deduction of the full amount of allowances as required under paragraph (d) of this section), the permitting authority shall amend, in accordance with §§72.80 and 72.83 (administrative amendment) of this chapter, the opt-in source's Acid Rain permit to terminate the opt-in permit, not later than 60 days from the issuance of the notification under paragraph (f) of this section.

(2) The termination of the opt-in permit under paragraph (g)(1) of this section will be effective on January 1 of the year for which the withdrawal is requested. An opt-in source shall continue to be an affected unit until the effective date of the termination.

(h) *Reapplication upon failure to meet conditions of withdrawal.* If the Administrator denies the opt-in source's request to withdraw, the designated representative may submit another request to withdraw in accordance with paragraphs (b) and (c) of this section.

(i) *Ability to return to the Acid Rain Program.* Once a combustion or process source withdraws from the Acid Rain Program and its opt-in permit is terminated, a new opt-in permit application for the combustion or process source may not be submitted prior to the date that is four years after the date on which the opt-in permit became effective.

[60 FR 17115, Apr. 4, 1995, as amended at 63 FR 18841, Apr. 16, 1998; 70 FR 25336, May 12, 2005]

§ 74.19 Revision and renewal of opt-in permit.

(a) The designated representative of an opt-in source may submit revisions to its opt-in permit in accordance with subpart H of part 72 of this chapter.

(b) The designated representative of an opt-in source may renew its opt-in permit by meeting the following requirements:

(1)(i) In order to renew an opt-in permit if the Administrator is the permitting authority for the renewed permit, the designated representative of an opt-in source must submit to the Administrator an opt-in permit application at least 6 months prior to the expiration of an existing opt-in permit.

(ii) In order to renew an opt-in permit if the State is the permitting authority for the renewed permit, the designated representative of an opt-in source must submit to the permitting authority an opt-in permit application at least 18 months prior to the expiration of an existing opt-in permit or such shorter time as may be approved for operating permits under part 70 of this chapter.

(2) Each complete opt-in permit application submitted to renew an opt-in permit shall contain the following elements in a format prescribed by the Administrator:

(i) Elements contained in the opt-in source's initial opt-in permit application as specified under §74.16(a)(1), (2), (10), (11), (12), and (13).

(ii) An updated monitoring plan, if applicable under §75.53(b) of this chapter.

(c)(1) Upon receipt of an opt-in permit application submitted to renew an opt-in permit, the permitting authority shall issue or deny an opt-in permit in accordance with the requirements under subpart B of this part, except as provided in paragraph (c)(2) of this section.

(2) When issuing a renewed opt-in permit, the permitting authority shall not alter an opt-in source's allowance allocation as established, under subpart B and subpart C of this part for combustion sources and under subpart B and subpart D of this part for process sources, in the opt-in permit that is being renewed.

Subpart C—Allowance Calculations for Combustion Sources

§ 74.20 Data for baseline and alternative baseline.

(a) *Acceptable data.* (1) The designated representative of a combustion source shall submit either the data specified in this paragraph or alternative data under paragraph (c) of this section. The designated representative shall also submit the calculations under this section based on such data.

(2) The following data shall be submitted for the combustion source for the calendar year(s) under paragraph (a)(3) of this section:

(i) Monthly or annual quantity of each type of fuel consumed, expressed in thousands of tons for coal, thousands of barrels for oil, and million standard cubic feet (scf) for natural gas. If other fuels are used, the combustion source must specify units of measure.

(ii) Monthly or annual heat content of fuel consumed for each type of fuel consumed, expressed in British thermal units (Btu) per pound for coal, Btu per barrel for oil, and Btu per standard cubic foot (scf) for natural gas. If other fuels are used, the combustion source must specify units of measure.

(iii) Monthly or annual sulfur content of fuel consumed for each type of fuel consumed, expressed as a percentage by weight.

(3) *Calendar Years.* (i) For combustion sources that commenced operating prior to January 1, 1985, data under this section shall be submitted for 1985, 1986, and 1987.

(ii) For combustion sources that commenced operation after January 1, 1985, the data under this section shall be submitted for the first three consecutive calendar years during which the combustion source operated after December 31, 1985.

(b) *Calculation of baseline and alternative baseline.* (1) For combustion sources that commenced operation prior to January 1, 1985, the baseline is the average annual quantity of fuel consumed during 1985, 1986, and 1987, expressed in mmBtu. The baseline shall be calculated as follows:

$$\text{baseline} = \frac{\sum_{\text{Year}=1985}^{1987} \text{annual fuel consumption}}{3}$$

where,

(i) for a combustion source submitting monthly data,

$$\text{annual fuel consumption} = \sum_{\text{months}=\text{Jan}}^{\text{Dec}} \sum_{\text{Fuel Types}} \left[\begin{array}{c} \text{quantity of fuel consumed} \\ \times \text{ heat content } \times \text{ unit conversion} \end{array} \right]$$

and unit conversion

= 2 for coal

= 0.001 for oil

= 1 for gas

For other fuels, the combustion source must specify unit conversion; or

(ii) for a combustion source submitting annual data,

$$\text{annual fuel consumption} = \sum_{\text{Fuel Types}} \left[\begin{array}{c} \text{quantity of fuel consumed} \\ \times \text{ heat content } \times \text{ unit conversion} \end{array} \right]$$

and unit conversion
= 2 for coal
= 0.001 for oil
= 1 for gas

For other fuels, the combustion source must specify unit conversion.

(2) For combustion sources that commenced operation after January 1, 1985, the alternative baseline is the average annual quantity of fuel consumed in the first three consecutive calendar years during which the combustion source operated after December 31, 1985, expressed in mmBtu. The alternative baseline shall be calculated as follows:

$$\text{alternative baseline} = \frac{\sum_{\text{First 3 consecutive years}} \text{annual fuel consumption}}{3}$$

where,

''annual fuel consumption'' is as defined under paragraph (b)(1)(i) or (ii) of this section.

(c) *Alternative data.* (1) For combustion sources for which any of the data under paragraph (b) of this section is not available due solely to a natural catastrophe, data as set forth in paragraph (a)(2) of this section for the first three consecutive calendar years for which data is available after December 31, 1985, may be submitted. The alternative baseline for these combustion sources shall be calculated using the equation for alternative baseline in paragraph (b)(2) of this section and the definition of annual fuel consumption in paragraphs (b)(1)(i) or (ii) of this section.

(2) Except as provided in paragraph (c)(1) of this section, no alternative data may be submitted. A combustion source that cannot submit all required data, in accordance with this section, shall not be eligible to submit an opt-in permit application.

(d) *Administrator's action.* The Administrator may accept in whole or in part or with changes as appropriate, request additional information, or reject data or alternative data submitted for a combustion source's baseline or alternative baseline.

§ 74.22 Actual SO_2 emissions rate.

(a) *Data requirements.* The designated representative of a combustion source shall submit the calculations under this section based on data submitted under § 74.20 for the following calendar year:

(1) For combustion sources that commenced operation prior to January 1, 1985, the calendar year for calculating the actual SO_2 emissions rate shall be 1985.

(2) For combustion sources that commenced operation after January 1, 1985, the calendar year for calculating the actual SO_2 emissions rate shall be the first year of the three consecutive calendar years of the alternative baseline under § 74.20(b)(2).

(3) For combustion sources meeting the requirements of § 74.20(c), the calendar year for calculating the actual SO_2 emissions rate shall be the first year of the three consecutive calendar years to be used as alternative data under § 74.20(c).

(b) *SO_2 emissions factor calculation.* The SO_2 emissions factor for each type of fuel consumed during the specified year, expressed in pounds per thousand tons for coal, pounds per thousand barrels for oil and pounds per million cubic feet (scf) for gas, shall be calculated as follows:

SO_2 Emissions Factor = (average percent of sulfur by weight) × (k),

where,

average percent of sulfur by weight
= annual average, for a combustion source submitting annual data
= monthly average, for a combustion source submitting monthly data

k = 39,000 for bituminous coal or anthracite
= 35,000 for subbituminous coal
= 30,000 for lignite
= 5,964 for distillate (light) oil
= 6,594 for residual (heavy) oil
= 0.6 for natural gas

For other fuels, the combustion source must specify the SO_2 emissions factor.

(c) *Annual SO_2 emissions calculation.* Annual SO_2 Emissions for the specified calendar year, expressed in pounds, shall be calculated as follows:

(1) For a combustion source submitting monthly data,

$$\text{Annual } SO_2 \text{ Emissions} = \sum_{\text{months=Jan}}^{\text{Dec}} \sum_{\text{Fuel Types}} \left[\begin{array}{c} \text{quantity of fuel consumed} \\ \times\ SO_2 \text{ emissions factor} \\ \times\ (1 - \text{control system efficiency}) \\ \times\ (1 - \text{fuel pre-treatment efficiency}) \end{array} \right]$$

(2) For a combustion source submitting annual data:

$$\text{Annual } SO_2 \text{ Emissions} = \sum_{\text{Fuel Types}} \left[\begin{array}{c} \text{quantity of fuel consumed} \\ \times\ SO_2 \text{ emissions factor} \\ \times\ (1 - \text{control system efficiency}) \\ \times\ (1 - \text{fuel pre-treatment efficiency}) \end{array} \right]$$

where,

''quantity of fuel consumed'' is as defined under § 74.20(a)(2)(i);

''SO_2 emissions factor'' is as defined under paragraph (b) of this section;

''control system efficiency'' is as defined under § 60.48(a) and part 60, appendix A, method 19 of this chapter, if applicable; and

''fuel pre-treatment efficiency'' is as defined under § 60.48(a) and part 60, appendix A, method 19 of this chapter, if applicable.

(d) *Annual fuel consumption calculation.* Annual fuel consumption for the specified calendar year, expressed in mmBtu, shall be calculated as defined under § 74.20(b)(1) (i) or (ii).

(e) *Actual SO_2 emissions rate calculation.* The actual SO_2 emissions rate for the specified calendar year, expressed in lbs/mmBtu, shall be calculated as follows:

$$\text{Actual } SO_2 \text{ Emissions Rate} = \frac{\text{Annual } SO_2 \text{ Emissions}}{\text{Annual Fuel Consumption}}$$

[60 FR 17115, Apr. 4, 1995, as amended at 63 FR 18841, Apr. 16, 1998]

§ 74.23 1985 Allowable SO_2 emissions rate.

(a) *Data requirements.* (1) The designated representative of the combustion source shall submit the following data and the calculations under paragraph (b) of this section based on the submitted data:

(i) Allowable SO_2 emissions rate of the combustion source expressed in lbs/mmBtu as defined under § 72.2 of this chapter for the calendar year specified in paragraph (a)(2) of this section. If the allowable SO_2 emissions rate is not expressed in lbs/mmBtu, the allowable emissions rate shall be converted to lbs/mmBtu by multiplying the emissions rate by the appropriate factor as specified in Table 1 of this section.

TABLE 1—FACTORS TO CONVERT EMISSION LIMITS TO POUNDS OF SO_2/MMBTU

Unit measurement	Bituminous coal	Subbituminous coal	Lignite coal	Oil
lbs Sulfur/mmBtu	2.0	2.0	2.0	2.0
% Sulfur in fuel	1.66	2.22	2.86	1.07
ppm SO_2	0.00287	0.00384	.....	0.00167
ppm Sulfur in fuel	.....	.....	.....	0.00334
tons SO_2/hour	2×8760/(annual fuel consumption for specified year [1]×10^3)			
lbs SO_2/hour	8760/(annual fuel consumption for specified year [1]×10^6)			

[1] Annual fuel consumption as defined under § 74.20(b)(1) (i) or (ii); specified calendar year as defined under § 74.23(a)(2).

(ii) Citation of statute, regulations, and any other authority under which the allowable emissions rate under paragraph (a)(1) of this section is established as applicable to the combustion source;

(iii) Averaging time associated with the allowable emissions rate under paragraph (a)(1) of this section.

(iv) The annualization factor for the combustion source, based on the type of combustion source and the associated averaging time of the allowable emissions rate of the combustion source, as set forth in the Table 2 of this section:

TABLE 2—ANNUALIZATION FACTORS FOR SO_2 EMISSION RATES

Type of combustion source	Annualization factor for scrubbed unit	Annualization factor for unscrubbed unit
Unit Combusting Oil, Gas, or some combination	1.00	1.00
Coal Unit with Averaging Time <= 1 day	0.93	0.89
Coal Unit with Averaging Time = 1 week	0.97	0.92
Coal Unit with Averaging Time = 30 days	1.00	0.96
Coal Unit with Averaging Time = 90 days	1.00	1.00
Coal Unit with Averaging Time = 1 year	1.00	1.00
Coal Unit with Federal Limit, but Averaging Time Not Specified	0.93	0.89

(2) *Calendar year*. (i) For combustion sources that commenced operation prior to January 1, 1985, the calendar year for the allowable SO_2 emissions rate shall be 1985.

(ii) For combustion sources that commenced operation after January 1, 1985, the calendar year for the allowable SO_2 emissions rate shall be the first year of the three consecutive calendar years of the alternative baseline under § 74.20(b)(2).

(iii) For combustion sources meeting the requirements of § 74.20(c), the calendar year for calculating the allowable SO_2 emissions rate shall be the first year of the three consecutive calendar years to be used as alternative data under § 74.20(c).

(b) *1985 Allowable SO_2 emissions rate calculation*. The allowable SO_2 emissions rate for the specified calendar year shall be calculated as follows:

1985 Allowable SO_2 Emissions Rate = (Allowable SO_2 Emissions Rate) × (Annualization Factor)

§ 74.24 Current allowable SO_2 emissions rate.

The designated representative shall submit the following data:

(a) Current allowable SO_2 emissions rate of the combustion source, expressed in lbs/mmBtu, which shall be the most stringent federally enforceable emissions limit in effect as of the date of submission of the opt-in application. If the allowable SO_2 emissions rate is not expressed in lbs/mmBtu, the allowable emissions rate shall be converted to lbs/mmBtu by multiplying the allowable rate by the appropriate factor as specified in Table 1 in § 74.23(a)(1)(i).

(b) Citations of statute, regulation, and any other authority under which the allowable emissions rate under

paragraph (a) of this section is established as applicable to the combustion source;

(c) Averaging time associated with the allowable emissions rate under paragraph (a) of this section.

§ 74.25 Current promulgated SO_2 emissions limit.

The designated representative shall submit the following data:

(a) Current promulgated SO_2 emissions limit of the combustion source, expressed in lbs/mmBtu, which shall be the most stringent federally enforceable emissions limit that has been promulgated as of the date of submission of the opt-in permit application and that either is in effect on that date or will take effect after that date. If the promulgated SO_2 emissions limit is not expressed in lbs/mmBtu, the limit shall be converted to lbs/mmBtu by multiplying the limit by the appropriate factor as specified in Table 1 of § 74.23(a)(1)(i).

(b) Citations of statute, regulation and any other authority under which the emissions limit under paragraph (a) of this section is established as applicable to the combustion source;

(c) Averaging time associated with the emissions limit under paragraph (a) of this section.

(d) Effective date of the emissions limit under paragraph (a) of this section.

§ 74.26 Allocation formula.

(a) The Administrator will calculate the annual allowance allocation for a combustion source based on the data, corrected as necessary, under § 74.20 through § 74.25 as follows:

(1) For combustion sources for which the current promulgated SO_2 emissions limit under § 74.25 is greater than or equal to the current allowable SO_2 emissions rate under § 74.24, the number of allowances allocated for each year equals:

$$\text{Allowances} = \frac{\begin{bmatrix}\text{baseline}\\ \text{or}\\ \text{alternative baseline}\end{bmatrix} \times \text{the lesser of} \begin{bmatrix}\text{the actual } SO_2 \text{ emissions rate}\\ \text{or}\\ \text{the 1985 allowable } SO_2 \text{ emissions rate}\\ \text{or}\\ \text{the current allowable } SO_2 \text{ emissions rate}\end{bmatrix}}{2000}$$

(2) For combustion sources for which the current promulgated SO_2 emissions limit under § 74.25 is less than the current allowable SO_2 emissions rate under § 74.24.

(i) The number of allowances for each year ending prior to the effective date of the promulgated SO_2 emissions limit equals:

$$\text{Allowances} = \frac{\begin{bmatrix}\text{baseline}\\ \text{or}\\ \text{alternative baseline}\end{bmatrix} \times \text{the lesser of} \begin{bmatrix}\text{the actual } SO_2 \text{ emissions rate}\\ \text{or}\\ \text{the 1985 allowable } SO_2 \text{ emissions rate}\\ \text{or}\\ \text{the current allowable } SO_2 \text{ emissions rate}\end{bmatrix}}{2000}$$

(ii) The number of allowances for the year that includes the effective date of the promulgated SO_2 emissions limit and for each year thereafter equals:

$$\text{Allowances} = \frac{\begin{bmatrix}\text{baseline}\\ \text{or}\\ \text{alternative baseline}\end{bmatrix} \times \text{the lesser of} \begin{bmatrix}\text{the actual } SO_2 \text{ emissions rate}\\ \text{or}\\ \text{the 1985 allowable } SO_2 \text{ emissions rate}\\ \text{or}\\ \text{the current promulgated } SO_2 \text{ emissions rate}\end{bmatrix}}{2000}$$

[60 FR 17115, Apr. 4, 1995, as amended at 63 FR 18841, Apr. 16, 1998]

§ 74.28 Allowance allocation for combustion sources becoming opt-in sources on a date other than January 1.

(a) *Dates of entry.* (1) If an opt-in source provided monthly data under § 74.20, the opt-in source's opt-in permit may become effective at the beginning of a calendar quarter as of January 1, April 1, July 1, or October 1.

(2) If an opt-in source provided annual data under § 74.20, the opt-in source's opt-in permit must become effective on January 1.

(b) *Prorating by Calendar Quarter.* Where a combustion source's opt-in permit becomes effective on April 1, July 1, or October 1 of a given year, the Administrator will prorate the allowance allocation for that first year by the calendar quarters remaining in the year as follows:

Allowances for the first year

$$= \left(\frac{\text{first year partial baseline}}{\text{baseline or alternative baseline}}\right) \times \text{annual allocation of allowances for the first year}$$

(1) For combustion sources that commenced operations before January 1, 1985,

$$\text{first year partial baseline} = \frac{\sum_{\text{Year}=1985}^{1987} \text{fuel consumption for remaining calendar quarters}}{3}$$

(2) For combustion sources that commenced operations after January 1, 1985,

$$\text{first year partial baseline} = \sum_{\text{First 3 consecutive years}} \frac{\text{fuel consumption for the remaining calendar quarters}}{3}$$

(3) Under paragraphs (b) (1) and (2) of this section,

(i) ''Remaining calendar quarters'' shall be the calendar quarters in the first year for which the opt-in permit will be effective.

(ii) Fuel consumption for remaining calendar quarters =

$$\sum_{\text{months=Apr., Jul., or Oct.}}^{\text{Dec}} \cdot \sum_{\text{Fuel Types}} \text{quantity of fuel consumed} \times \text{heat content} \times \text{unit conversion}$$

where unit conversion
= 2 for coal
= 0.001 for oil
= 1 for gas
For other fuels, the combustion source must specify unit conversion;
and where starting month
= April, if effective date is April 1;
= July, if effective date is July 1; and
= October, if effective date is October 1.

Subpart D—Allowance Calculations for Process Sources [Reserved]

Subpart E—Allowance Tracking and Transfer and End of Year Compliance

§ 74.40 Establishment of opt-in source allowance accounts.

(a) *Establishing accounts.* Not earlier than the date on which a combustion or process source becomes an affected unit under this part and upon receipt of a request for a compliance account under paragraph (b) of this section, the Administrator will establish a compliance account (unless the source that includes the opt-in source already has a compliance account or the opt-in source has, under § 74.4(c), a different designated representative than the designated representative for the source) and allocate allowances in accordance with subpart C of this part for combustion sources or subpart D of this part for process sources.

(b) *Request for opt-in account.* The designated representative of the opt-in source shall, on or after the effective date of the opt-in permit as specified in § 74.14(d), submit a letter requesting the opening of an compliance account (unless the source that includes the opt-in source already has a compliance account or the opt-in source has, under § 74.4(c), a different designated representative than the designated representative for the source)to the Administrator.

[60 FR 17115, Apr. 4, 1995, as amended at 70 FR 25336, May 12, 2005]

§ 74.41 Identifying allowances.

(a) *Identifying allowances.* Allowances allocated to an opt-in source will be assigned a serial number that identifies them as being allocated under an opt-in permit.

(b) *Submittal of opt-in allowances for auction.* (1) An authorized account representative may offer for sale in the spot auction under § 73.70 of this chapter allowances that are allocated to opt-in sources, if the allowances have a compliance use date earlier than the year in which the spot auction is to be held and if the Administrator has completed the deductions for compliance under § 73.35(b) for the compliance year corresponding to the compliance use date of the offered allowances.

(2) Authorized account representatives may not offer for sale in the advance auctions under § 73.70 of this chapter allowances allocated to opt-in sources.

§ 74.42 Limitation on transfers.

(a) With regard to a transfer request submitted for recordation during the period starting January 1 and ending with the allowance transfer deadline in the same year, the Administrator will not record a transfer of an opt-in allowance that is allocated to an opt-in source for the year in which the transfer request is submitted or a subsequent year.

(b) With regard to a transfer request during the period starting with the day after an allowance transfer deadline and ending December 31 in the same year, the Administrator will not record a transfer of an opt-in allowance that is allocated to an opt-in source for a year after the year in which the transfer request is submitted.

[70 FR 25336, May 12, 2005]

§ 74.43 Annual compliance certification report.

(a) *Applicability and deadline.* For each calendar year in which an opt-in source is subject to the Acid Rain emissions limitations, the designated

representative of the opt-in source shall submit to the Administrator, no later than 60 days after the end of the calendar year, an annual compliance certification report for the opt-in source.

(b) *Contents of report.* The designated representative shall include in the annual compliance certification report the following elements, in a format prescribed by the Administrator, concerning the opt-in source and the calendar year covered by the report:

(1) Identification of the opt-in source;

(2) An opt-in utilization report in accordance with § 74.44 for combustion sources and § 74.45 for process sources;

(3) A thermal energy compliance report in accordance with § 74.47 for combustion sources and § 74.48 for process sources, if applicable;

(4) Shutdown or reconstruction information in accordance with § 74.46, if applicable;

(5) A statement that the opt-in source has not become an affected unit under § 72.6 of this chapter;

(6) At the designated representative's option, the total number of allowances to be deducted for the year, using the formula in § 74.49, and the serial numbers of the allowances that are to be deducted; and

(7) In an annual compliance certification report for a year during 1995 through 2005, at the designated representative's option, for opt-in sources that share a common stack and whose emissions of sulfur dioxide are not monitored separately or apportioned in accordance with part 75 of this chapter, the percentage of the total number of allowances under paragraph (b)(6) of this section for all such affected units that is to be deducted from each affected unit's compliance subaccount; and

(8) In an annual compliance certification report for a year during 1995 through 2005, the compliance certification under paragraph (c) of this section.

(c) *Annual compliance certification.* In the annual compliance certification report under paragraph (a) of this section, the designated representative shall certify, based on reasonable inquiry of those persons with primary responsibility for operating the opt-in source in compliance with the Acid Rain Program, whether the opt-in source was operated during the calendar year covered by the report in compliance with the requirements of the Acid Rain Program applicable to the opt-in source, including:

(1) Whether the opt-in source was operated in compliance with applicable Acid Rain emissions limitations, including whether the opt-in source held allowances, as of the allowance transfer deadline, in its compliance subaccount (after accounting for any allowance deductions or other adjustments under § 73.34(c) of this chapter) not less than the opt-in source's total sulfur dioxide emissions during the calendar year covered by the annual report;

(2) Whether the monitoring plan that governs the opt-in source has been maintained to reflect the actual operation and monitoring of the opt-in source and contains all information necessary to attribute monitored emissions to the opt-in source;

(3) Whether all the emissions from the opt-in source or group of affected units (including the opt-in source) using a common stack were monitored or accounted for through the missing data procedures and reported in the quarterly monitoring reports in accordance with part 75 of this chapter;

(4) Whether the facts that form the basis for certification of each monitor at the opt-in source or group of affected units (including the opt-in source) using a common stack or of an opt-in source's qualifications for using an Acid Rain Program excepted monitoring method or approved alternative monitoring method, if any, have changed;

(5) If a change is required to be reported under paragraph (c)(4) of this section, specify the nature of the change, the reason for the change, when the change occurred, and how the unit's compliance status was determined subsequent to the change, including what method was used to determine emissions when a change mandated the need for monitoring recertification; and

(6) When applicable, whether the opt-in source was operating in compliance

with its thermal energy plan as provided in § 74.47 for combustion sources and § 74.48 for process sources.

[60 FR 17115, Apr. 4, 1995, as amended at 70 FR 25337, May 12, 2005]

§ 74.44 Reduced utilization for combustion sources.

(a) *Calculation of utilization*—(1) *Annual utilization.* (i) Except as provided in paragraph (a)(1)(ii) of this section, annual utilization for the calendar year shall be calculated as follows:

Annual Utilization = Actual heat input + Reduction from improved efficiency

where,

(A) ''Actual heat input'' shall be the actual annual heat input (in mmBtu) of the opt-in source for the calendar year determined in accordance with appendix F of part 75 of this chapter.

(B) ''Reduction from improved efficiency'' shall be the sum of the following four elements: Reduction from demand side measures that improve the efficiency of electricity consumption; reduction from demand side measures that improve the efficiency of steam consumption; reduction from improvements in the heat rate at the opt-in source; and reduction from improvement in the efficiency of steam production at the opt-in source. Qualified demand side measures applicable to the calculation of utilization for opt-in sources are listed in appendix A, section 1 of part 73 of this chapter.

(C) ''Reduction from demand side measures that improve the efficiency of electricity consumption'' shall be a good faith estimate of the expected kilowatt hour savings during the calendar year for such measures and the corresponding reduction in heat input (in mmBtu) resulting from those measures. The demand side measures shall be implemented at the opt-in source, in the residence or facility to which the opt-in source delivers electricity for consumption or in the residence or facility of a customer to whom the opt-in source's utility system sells electricity. The verified amount of such reduction shall be submitted in accordance with paragraph (c)(2) of this section.

(D) ''Reduction from demand side measures that improve the efficiency of steam consumption'' shall be a good faith estimate of the expected steam savings (in mmBtu) from such measures during the calendar year and the corresponding reduction in heat input (in mmBtu) at the opt-in source as a result of those measures. The demand side measures shall be implemented at the opt-in source or in the facility to which the opt-in source delivers steam for consumption. The verified amount of such reduction shall be submitted in accordance with paragraph (c)(2) of this section.

(E) ''Reduction from improvements in heat rate'' shall be a good faith estimate of the expected reduction in heat rate during the calendar year and the corresponding reduction in heat input (in mmBtu) at the opt-in source as a result of all improved unit efficiency measures at the opt-in source and may include supply-side measures listed in appendix A, section 2.1 of part 73 of this chapter. The verified amount of such reduction shall be submitted in accordance with paragraph (c)(2) of this section.

(F) ''Reduction from improvement in the efficiency of steam production at the opt-in source'' shall be a good faith estimate of the expected improvement in the efficiency of steam production at the opt-in source during the calendar year and the corresponding reduction in heat input (in mmBtu) at the opt-in source as a result of all improved steam production efficiency measures. In order to claim improvements in the efficiency of steam production, the designated representative of the opt-in source must demonstrate to the satisfaction of the Administrator that the heat rate of the opt-in source has not increased. The verified amount of such reduction shall be submitted in accordance with paragraph (c)(2) of this section.

(G) Notwithstanding paragraph (a)(1)(i)(B) of this section, where two or more opt-in sources, or two or more opt-in sources and Phase I units, include in their annual compliance certification reports their good faith estimate of kilowatt hour savings or steam savings from the same specific measures:

(*1*) The designated representatives of all such opt-in sources and Phase I units shall submit with their annual compliance certification reports a certification signed by all such designated representatives. The certification shall apportion the total kilowatt hour savings or steam savings among such opt-in sources and Phase I units.

(*2*) Each designated representative shall include in its annual compliance certification report only its share of kilowatt hour savings or steam savings.

(ii) For an opt-in source whose opt-in permit becomes effective on a date other than January 1, annual utilization for the first year shall be calculated as follows:

$$\text{Annual Utilization} = \begin{matrix}\text{Actual heat input}\\ \text{for the remaining calendar quarters}\end{matrix} + \begin{matrix}\text{Reduction from improved efficiency}\\ \text{for the remaining calendar quarters}\end{matrix}$$

where ''actual heat input'' and ''reduction from improved efficiency'' are defined as set forth in paragraph (a)(1)(i) of this section but are restricted to data or estimates for the ''remaining calendar quarters'', which are the calendar quarters that begin on or after the date the opt-in permit becomes effective.

(2) *Average utilization.* Average utilization for the calendar year shall be defined as the average of the annual utilization calculated as follows:

(i) For the first two calendar years after the effective date of an opt-in permit taking effect on January 1, average utilization will be calculated as follows:

(A) Average utilization for the first year = annual utilization$_{\text{year 1}}$

where ''annual utilization$_{\text{year 1}}$'' is as calculated under paragraph (a)(1)(i) of this section.

(B) Average utilization for the second year

$$= \left(\frac{\text{revised annual utilization}_{\text{year 1}} + \text{annual utilization}_{\text{year 2}}}{2}\right)$$

where,

''revised annual utilization$_{\text{year 1}}$'' is as submitted for the year under paragraph (c)(2)(i)(B) of this section and adjusted under paragraph (c)(2)(iii) of this section;

''annual utilization$_{\text{year 2}}$'' is as calculated under paragraph (a)(1)(i) of this section.

(ii) For the first three calendar years after the effective date of the opt-in permit taking effect on a date other than January 1, average utilization will be calculated as follows:

(A) Average utilization for the first year after opt-in = annual utilization$_{\text{year 1}}$

where ''annual utilization$_{\text{year 1}}$'' is as calculated under paragraph (a)(1)(ii) of this section.

(B) Average utilization for the second year after opt-in

where,

$$= \left(\frac{\text{revised annual utilization}_{\text{year 1}} + \text{annual utilization}_{\text{year 2}}}{\left(\begin{array}{c} \text{Number of months} \\ \text{in year 1 and year 2 for which} \\ \text{the opt-in permit is effective} \end{array} \right)} \right) \times 12$$

''revised annual utilization$_{\text{year 1}}$'' is as submitted for the year under paragraph (c)(2)(i)(B) of this section and adjusted under paragraph (c)(2)(iii) of this section; and

''annual utilization$_{\text{year 2}}$'' is as calculated under paragraph (a)(1)(ii) of this section.

(C) Average utilization for the third year after opt-in

$$= \left(\frac{\text{revised annual utilization}_{\text{year 1}} + \text{revised annual utilization}_{\text{year 2}} + \text{annual utilization}_{\text{year 3}}}{\left(\begin{array}{c} \text{Number of months} \\ \text{in year 1, year 2, and year 3} \\ \text{for which the opt-in permit is effective} \end{array} \right)} \right) \times 12$$

where,

''revised annual utilization$_{\text{year 1}}$'' is as submitted for the year under paragraph (c)(2)(i)(B) of this section and adjusted under paragraph (c)(2)(iii) of this section; and

''revised annual utilization$_{\text{year 2}}$'' is as submitted for the year under paragraph (c)(2)(i)(B) of this section and adjusted under paragraph (c)(2)(iii) of this section; and

''annual utilization$_{\text{year 3}}$'' is as calculated under paragraph (a)(1)(ii) of this section.

(iii) Except as provided in paragraphs (a)(2)(i) and (a)(2)(ii) of this section, average utilization shall be the sum of annual utilization for the calendar year and the revised annual utilization, submitted under paragraph (c)(2)(i)(B) of this section and adjusted by the Administrator under paragraph (c)(2)(iii) of this section, for the two immediately preceding calendar years divided by 3.

(b) *Determination of reduced utilization and calculation of allowances*—(1) *Determination of reduced utilization.* For a year during which its opt-in permit is effective, an opt-in source has reduced utilization if the opt-in source's average utilization for the calendar year, as calculated under paragraph (a) of this section, is less than its baseline.

(2) *Calculation of allowances deducted for reduced utilization.* If the Administrator determines that an opt-in source has reduced utilization for a calendar year during which the opt-in source's opt-in permit is in effect, the Administrator will deduct allowances, as calculated under paragraph (b)(2)(i) of this section, from the compliance subaccount of the opt-in source's Allowance Tracking System account.

(i) Allowances deducted for reduced utilization =

$$\text{Number of allowances allocated for the calendar year} \times \left(1 - \left(\frac{\text{average utilization}_{\text{calendar year}}}{\text{baseline}} \right) \right)$$

(ii) The allowances deducted shall have the same or an earlier compliance use date as those allocated under subpart C of this part for the calendar year for which the opt-in source has reduced utilization.

(c) *Compliance*—(1) *Opt-in Utilization Report*. The designated representative for each opt-in source shall submit an opt-in utilization report for the calendar year, as part of its annual compliance certification report under § 74.43, that shall include the following elements in a format prescribed by the Administrator:

(i) The name, authorized account representative identification number, and telephone number of the designated representative of the opt-in source;

(ii) The account identification number in the Allowance Tracking System of the source that includes the opt-in source;

(iii) The opt-in source's annual utilization for the calendar year, as defined under paragraph (a)(1) of this section, and the revised annual utilization, submitted under paragraph (c)(2)(i)(B) of this section and adjusted under paragraph (c)(2)(iii) of this section, for the two immediately preceding calendar years;

(iv) The opt-in source's average utilization for the calendar year, as defined under paragraph (a)(2) of this section;

(v) The difference between the opt-in source's average utilization and its baseline;

(vi) The number of allowances that shall be deducted, if any, using the formula in paragraph (b)(2)(i) of this section and the supporting calculations;

(2) *Confirmation report*. (i) If the annual compliance certification report for an opt-in source includes estimates of any reduction in heat input resulting from improved efficiency as defined under paragraph (a)(1)(i) of this section, the designated representative shall submit, by July 1 of the year in which the annual compliance certification report was submitted, a confirmation report, concerning the calendar year covered by the annual compliance certification report. The Administrator may grant, for good cause shown, an extension of the time to file the confirmation report. The confirmation report shall include the following elements in a format prescribed by the Administrator:

(A) *Verified reduction in heat input*. Any verified kwh savings or any verified steam savings from demand side measures that improve the efficiency of electricity or steam consumption, any verified reduction in the heat rate at the opt-in source, or any verified improvement in the efficiency of steam production at the opt-in source achieved and the verified corresponding reduction in heat input for the calendar year that resulted.

(B) *Revised annual utilization*. The opt-in source's annual utilization for the calendar year as provided under paragraph (c)(1)(iii) of this section, recalculated using the verified reduction in heat input for the calendar year under paragraph (c)(2)(i)(A) of this section.

(C) *Revised average utilization*. The opt-in source's average utilization as provided under paragraph (c)(1)(iv) of this section, recalculated using the verified reduction in heat input for the calendar year under paragraph (c)(2)(i)(A) of this section.

(D) *Recalculation of reduced utilization*. The difference between the opt-in source's recalculated average utilization and its baseline.

(E) *Allowance adjustment*. The number of allowances that should be credited or deducted using the formulas in paragraphs (c)(2)(iii)(C) and (D) of this section and the supporting calculations; and the number of adjusted allowances remaining using the formula in paragraph (c)(2)(iii)(E) of this section and the supporting calculations.

(ii) *Documentation*. (A) For all figures under paragraphs (c)(2)(i)(A) of this section, the opt-in source must provide as part of the confirmation report, documentation (which may follow the EPA Conservation Verification Protocol) verifying the figures to the satisfaction of the Administrator.

(B) Notwithstanding paragraph (c)(2)(i)(A) of this section, where two or more opt-in sources, or two or more opt-in sources and Phase I units include in the confirmation report under paragraph (c)(2) of this section or § 72.91(b) of this chapter the verified kilowatt hour savings or steam savings defined under paragraph (c)(2)(i)(A) of this section, for the calendar year, from the same specific measures:

(*1*) The designated representatives of all such opt-in sources and Phase I units shall submit with their confirmation reports a certification signed by

all such designated representatives. The certification shall apportion the total kilowatt hour savings or steam savings as defined under paragraph (c)(2)(i)(A) of this section for the calendar year among such opt-in sources and Phase I units.

(*2*) Each designated representative shall include in the opt-in source's confirmation report only its share of the verified reduction in heat input as defined under paragraph (c)(2)(i)(A) of this section for the calendar year under the certification under paragraph (c)(2)(ii)(B)(1) of this section.

(iii) *Determination of reduced utilization based on confirmation report.* (A) If an opt-in source must submit a confirmation report as specified under paragraph (c)(2) of this section, the Administrator, upon such submittal, will adjust his or her determination of reduced utilization for the calendar year for the opt-in source. Such adjustment will include the recalculation of both annual utilization and average utilization, using verified reduction in heat input as defined under paragraph (c)(2)(i)(A) of this section for the calendar year instead of the previously estimated values.

(B) *Estimates confirmed.* If the total, included in the confirmation report, of the amounts of verified reduction in the opt-in source's heat input equals the total estimated in the opt-in source's annual compliance certification report for the calendar year, then the designated representative shall include in the confirmation report a statement indicating that is true.

(C) *Underestimate.* If the total, included in the confirmation report, of the amounts of verified reduction in the opt-in source's heat input is greater than the total estimated in the opt-in source's annual compliance certification report for the calendar year, then the designated representative shall include in the confirmation report the number of allowances to be credited to the compliance account of the source that includes the opt-in source calculated using the following formula:

Allowances credited for the calendar year in which the reduced utilization occurred =

$$\text{Number of allowances allocated for the calendar year} \times \left[\frac{\text{Average utilization}_{\text{Verified}} - \text{Average utilization}_{\text{Estimate}}}{\text{baseline}}\right]$$

where,

Average $\text{Utilization}_{\text{estimate}}$ = the average utilization of the opt-in source as defined under paragraph (a)(2) of this section, calculated using the estimated reduction in the opt-in source's heat input under (a)(1) of this section, and submitted in the annual compliance certification report for the calendar year.

Average $\text{Utilization}_{\text{verified}}$ = the average utilization of the opt-in source as defined under paragraph (a)(2) of this section, calculated using the verified reduction in the opt-in source's heat input as submitted under paragraph (c)(2)(i)(A) of this section by the designated representative in the confirmation report.

(D) *Overestimate.* If the total of the amounts of verified reduction in the opt-in source's heat input included in the confirmation report is less than the total estimated in the opt-in source's annual compliance certification report for the calendar year, then the designated representative shall include in the confirmation report the number of allowances to be deducted from the compliance account of the source that includes the opt-in source, which equals the absolute value of the result of the formula for allowances credited under paragraph (c)(2)(iii)(C) of this section.

(E) *Adjusted allowances remaining.* Unless paragraph (c)(2)(iii)(B) of this section applies, the designated representative shall include in the confirmation report the adjusted amount of allowances that would have been held in the compliance account of the source that includes the opt-in source if the deductions made under § 73.35(b) of this chapter had been based on the verified, rather than the estimated, reduction in

the opt-in source's heat input, calculated as follows:

$$\text{Adjusted amount of allowances} = \begin{array}{c}\text{Allowances held after deduction} - \text{Excess emissions} \\ + \text{Allowances credited} - \text{Allowances deducted}\end{array}$$

where:

''Allowances held after deduction'' shall be the amount of allowances held in the compliance account of the source that includes the opt-in source after deduction of allowances was made under §73.35(b) of this chapter based on the annual compliance certification report.

''Excess emissions'' shall be the amount (if any) of excess emissions determined under §73.35(d) for the calendar year based on the annual compliance certification report. ''Allowances credited'' shall be the amount of allowances calculated under paragraph (c)(2)(iii)(C) of this section.

''Allowances deducted'' shall be the amount of allowances calculated under paragraph (c)(2)(iii)(D) of this section.

(*1*) If the result of the formula for ''adjusted amount of allowances'' is negative, the absolute value of the result constitutes excess emissions of sulfur dioxide. If the result is positive, there are no excess emissions of sulfur dioxide.

(*2*) If the amount of excess emissions of sulfur dioxide calculated under ''adjusted amount of allowances'' differs from the amount of excess emissions of sulfur dioxide determined under §73.35 of this chapter based on the annual compliance certification report, then the designated representative shall include in the confirmation report a demonstration of:

(*i*) The number of allowances that should be deducted to offset any increase in excess emissions or returned to the account for any decrease in excess emissions; and

(*ii*) The amount of the excess emissions penalty (excluding interest) that should be paid or returned to the account for the change in excess emissions.

(*3*) The Administrator will deduct immediately from the compliance account of the source that includes the opt-in source the amount of allowances that he or she determines is necessary to offset any increase in excess emissions or will return immediately to the compliance account of the source that includes the opt-in source the amount of allowances that he or she determines is necessary to account for any decrease in excess emissions.

(*4*) The designated representative may identify the serial numbers of the allowances to be deducted or returned. In the absence of such identification, the deduction will be on a first-in, first-out basis under §73.35(c)(2) of this chapter and the identification of allowances returned will be at the Administrator's discretion.

(*5*) If the designated representative of an opt-in source fails to submit on a timely basis a confirmation report, in accordance with paragraph (c)(2) of this section, with regard to the estimate of reductions in heat input as defined under paragraph (c)(2)(i)(A) of this section, then the Administrator will reject such estimate and correct it to equal zero in the opt-in source's annual compliance certification report that includes that estimate. The Administrator will deduct immediately, on a first-in, first-out basis under §73.35(c)(2) of this chapter, the amount of allowances that he or she determines is necessary to offset any increase in excess emissions of sulfur dioxide that results from the correction and will require the owners and operators of the opt-in source to pay an excess emission penalty in accordance with part 77 of this chapter.

(F) If the opt-in source is governed by an approved thermal energy plan under §74.47 and if the opt-in source must submit a confirmation report as specified under paragraph (c)(2) of this section, the adjusted amount of allowances that should remain in the compliance account of the source that includes the opt-in source shall be calculated as follows:

Adjusted amount of allowances =

$$\text{Allowances allocated or acquired} - \text{tons emitted} - \text{the larger of} \begin{pmatrix} \text{allowances transferred} \\ \text{to all replacement units} \\ \text{or} \\ \text{allowances deducted} \\ \text{for reduced utilization} \end{pmatrix}$$

where,

''Allowances allocated or acquired'' shall be the number of allowances held in the compliance account of the source that includes the opt-in source at the allowance transfer deadline plus the number of allowances transferred for the previous calendar year to all replacement units under an approved thermal energy plan in accordance with § 74.47(a)(6).

''Tons emitted'' shall be the total tons of sulfur dioxide emitted by the opt-in source during the calendar year, as reported in accordance with subpart F of this part for combustion sources.

''Allowances transferred to all replacement units'' shall be the sum of allowances transferred to all replacement units under an approved thermal energy plan in accordance with § 74.47 and adjusted by the Administrator in accordance with § 74.47(d)(2).

''Allowances deducted for reduced utilization'' shall be the total number of allowances deducted for reduced utilization as calculated in accordance with this section including any adjustments required under paragraph (c)(iii)(E) of this section.

[60 FR 17115, Apr. 4, 1995, as amended at 63 FR 18841, Apr. 16, 1998; 70 FR 25337, May 12, 2005]

§ 74.45 Reduced utilization for process sources. [Reserved]

§ 74.46 Opt-in source permanent shutdown, reconstruction, or change in affected status.

(a) *Notification.* (1) When an opt-in source has permanently shutdown during the calendar year, the designated representative shall notify the Administrator of the date of shutdown, within 30 days of such shutdown.

(2) When an opt-in source has undergone a modification that qualifies as a reconstruction as defined in § 60.15 of this chapter, the designated representative shall notify the Administrator of the date of completion of the reconstruction, within 30 days of such completion.

(3) When an opt-in source becomes an affected unit under § 72.6 of this chapter, the designated representative shall notify the Administrator of such change in the opt-in source's affected status within 30 days of such change.

(b) *Administrator's action.* (1) The Administrator will terminate the opt-in source's opt-in permit and deduct allowances as provided below in the following circumstances:

(i) When an opt-in source has permanently shutdown. The Administrator shall deduct allowances equal in number to and with the same or earlier compliance use date as those allocated to the opt-in source under § 74.40 for the calendar year in which the shut down occurs and for all future years following the year in which the shut down occurs; or

(ii) When an opt-in source has undergone a modification that qualifies as a reconstruction as defined in § 60.15 of this chapter. The Administrator shall deduct allowances equal in number to and with the same or earlier compliance use date as those allocated to the opt-in source under § 74.40 for the calendar year in which the reconstruction is completed and all future years following the year in which the reconstruction is completed; or

(iii) When an opt-in source becomes an affected unit under § 72.6 of this chapter. The Administrator shall deduct allowances equal in number to and with the same or earlier compliance use date as those allocated to the opt-in source under § 74.40 for the calendar year in which the opt-in source becomes affected under § 72.6 of this chapter and all future years following the calendar year in which the opt-in source becomes affected under § 72.6; or

(iv) When an opt-in source does not renew its opt-in permit. The Administrator shall deduct allowances equal in number to and with the same or earlier compliance use date as those allocated to the opt-in source under § 74.40 for the calendar year in which the opt-in

source's opt-in permit expires and all future years following the year in which the opt-in source's opt-in permit expires.

(2) [Reserved]

[60 FR 17115, Apr. 4, 1995, as amended at 70 FR 25337, May 12, 2005]

§ 74.47 Transfer of allowances from the replacement of thermal energy—combustion sources.

(a) *Thermal energy plan*—(1) *General provisions*. The designated representative of an opt-in source that seeks to qualify for the transfer of allowances based on the replacement of thermal energy by a replacement unit shall submit a thermal energy plan subject to the requirements of § 72.40(b) of this chapter for multi-unit compliance options and this section. The effective period of the thermal energy plan shall begin at the start of the calendar quarter (January 1, April 1, July 1, or October 1) for which the plan is approved and end December 31 of the last full calendar year for which the opt-in permit containing the plan is in effect.

(2) *Applicability*. This section shall apply to any designated representative of an opt-in source and any designated representative of each replacement unit seeking to transfer allowances based on the replacement of thermal energy.

(3) *Contents*. Each thermal energy plan shall contain the following elements in a format prescribed by the Administrator:

(i) The calendar year and quarter that the thermal energy plan takes effect, which shall be the first year and quarter the replacement unit(s) will replace thermal energy of the opt-in source;

(ii) The name, authorized account representative identification number, and telephone number of the designated representative of the opt-in source;

(iii) The name, authorized account representative identification number, and telephone number of the designated representative of each replacement unit;

(iv) The account identification number in the Allowance Tracking System of the source that includes the opt-in source;

(v) The account identification number in the Allowance Tracking System of each source that includes a replacement unit;

(vi) The type of fuel used by each replacement unit;

(vii) The allowable SO_2 emissions rate, expressed in lbs/mmBtu, of each replacement unit for the calendar year for which the plan will take effect. When a thermal energy plan is renewed in accordance with paragraph (a)(9) of this section, the allowable SO_2 emission rate at each replacement unit will be the most stringent federally enforceable allowable SO_2 emissions rate applicable at the time of renewal for the calendar year for which the renewal will take effect. This rate will not be annualized;

(viii) The estimated annual amount of total thermal energy to be reduced at the opt-in source, including all energy flows (steam, gas, or hot water) used for any process or in any heating or cooling application, and, for a plan starting April 1, July 1, or October 1, such estimated amount of total thermal energy to be reduced starting April 1, July 1, or October 1 respectively and ending on December 31;

(ix) The estimated amount of total thermal energy at each replacement unit for the calendar year prior to the year for which the plan is to take effect, including all energy flows (steam, gas, or hot water) used for any process or in any heating or cooling application, and, for a plan starting April 1, July 1, or October 1, such estimated amount of total thermal energy for the portion of such calendar year starting April 1, July 1, or October 1 respectively;

(x) The estimated annual amount of total thermal energy at each replacement unit after replacing thermal energy at the opt-in source, including all energy flows (steam, gas, or hot water) used for any process or in any heating or cooling application, and, for a plan starting April 1, July 1, or October 1, such estimated amount of total thermal energy at each replacement unit after replacing thermal energy at the opt-in source starting April 1, July 1, or October 1 respectively and ending December 31;

(xi) The estimated annual amount of thermal energy at each replacement unit, including all energy flows (steam, gas, or hot water) used for any process or in any heating or cooling application, replacing thermal energy at the opt-in source, and, for a plan starting April 1, July 1, or October 1, such estimated amount of thermal energy replacing thermal energy at the opt-in source starting April 1, July 1, or October 1 respectively and ending December 31;

(xii) The estimated annual total fuel input at each replacement unit after replacing thermal energy at the opt-in source and, for a plan starting April 1, July 1, or October 1, such estimated total fuel input after replacing thermal energy at the opt-in source starting April 1, July 1, or October 1 respectively and ending December 31;

(xiii) The number of allowances calculated under paragraph (b) of this section that the opt-in source will transfer to each replacement unit represented in the thermal energy plan.

(xiv) The estimated number of allowances to be deducted for reduced utilization under § 74.44;

(xv) Certification that each replacement unit has entered into a legally binding steam sales agreement to provide the thermal energy, as calculated under paragraph (a)(3)(xi) of this section, that it is replacing for the opt-in source. The designated representative of each replacement unit shall maintain and make available to the Administrator, at the Administrator's request, copies of documents demonstrating that the replacement unit is replacing the thermal energy at the opt-in source.

(4) *Submission*. The designated representative of the opt-in source seeking to qualify for the transfer of allowances based on the replacement of thermal energy shall submit a thermal energy plan to the permitting authority by no later than six months prior to the first calendar quarter for which the plan is to be in effect. The thermal energy plan shall be signed and certified by the designated representative of the opt-in source and each replacement unit covered by the plan.

(5) *Retirement of opt-in source upon enactment of plan*. (i) If the opt-in source will be permanently retired as of the effective date of the thermal energy plan, the opt-in source shall not be required to monitor its emissions upon retirement, consistent with § 75.67 of this chapter, provided that the following requirements are met:

(A) The designated representative of the opt-in source shall include in the plan a request for an exemption from the requirements of part 75 in accordance with § 75.67 of this chapter and shall submit the following statement: ''I certify that the opt-in source (''is'' or ''will be'', as applicable) permanently retired on the date specified in this plan and will not emit any sulfur dioxide or nitrogen oxides after such date.''

(B) The opt-in source shall not emit any sulfur dioxide or nitrogen oxides after the date specified in the plan.

(ii) Notwithstanding the monitoring exemption discussed in paragraph (a)(5)(i) of this section, the designated representative for the opt-in source shall submit the annual compliance certification report provided under paragraph (d) of this section.

(6) *Administrator's action*. If the permitting authority approves a thermal energy plan, the Administrator will annually transfer allowances to the compliance account of each source that includes a replacement unit, as provided in the approved plan.

(7) *Incorporation, modification and renewal of a thermal energy plan*. (i) An approved thermal energy plan, including any revised or renewed plan that is approved, shall be incorporated into both the opt-in permit for the opt-in source and the Acid Rain permit for each replacement unit governed by the plan. Upon approval, the thermal energy plan shall be incorporated into the Acid Rain permit for each replacement unit pursuant to the requirements for administrative permit amendments under § 72.83 of this chapter.

(ii) In order to revise an opt-in permit to add an approved thermal energy plan or to change an approved thermal energy plan, the designated representative of the opt-in source shall submit a plan or a revised plan under paragraph (a)(4) of this section and meet the requirements for permit revisions under

§72.80 and either §72.81 or §72.82 of this chapter.

(8) *Termination of plan.* (i) A thermal energy plan shall be in effect until the earlier of the expiration of the opt-in permit for the opt-in source or the year for which a termination of the plan takes effect under paragraph (a)(8)(ii) of this section.

(ii) *Termination of plan by opt-in source and replacement units.* A notification to terminate a thermal energy plan in accordance with §72.40(d) of this chapter shall be submitted no later than December 1 of the calendar year for which the termination is to take effect.

(iii) If the requirements of paragraph (a)(8)(ii) of this section are met and upon revision of the opt-in permit of the opt-in source and the Acid Rain permit of each replacement unit governed by the thermal energy plan to terminate the plan pursuant to §72.83 of this chapter, the Administrator will adjust the allowances for the opt-in source and the replacement units to reflect the transfer back to the opt-in source of the allowances transferred from the opt-in source under the plan for the year for which the termination of the plan takes effect.

(9) *Renewal of thermal energy plan.* The designated representative of an opt-in source may renew the thermal energy plan as part of its opt-in permit renewal in accordance with §74.19.

(b) *Calculation of transferable allowances*—(1) *Qualifying thermal energy.* The amount of thermal energy credited towards the transfer of allowances based on the replacement of thermal energy shall equal the qualifying thermal energy and shall be calculated for each replacement unit as follows:

$$\text{Qualifying thermal energy} = \begin{array}{c}\text{the estimated thermal energy}\\ \text{at the replacement unit}\\ \text{under paragraph (a)(3)(xi) of this section}\end{array}$$

(2) *Fuel associated with qualifying thermal energy.* The fuel associated with the qualifying thermal energy at each replacement unit shall be calculated as follows:

$$\begin{array}{c}\text{Fuel associated with}\\ \text{Qualifying thermal energy}\end{array} = \frac{\text{Qualifying thermal energy}}{\text{Efficiency constant}}$$

where,

''Qualifying thermal energy'' for the replacement unit is as defined in paragraph (b)(1) of this section;

''Efficiency constant'' for the replacement unit

= 0.85, where the replacement unit is a boiler

= 0.80, where the replacement unit is a cogenerator

(3) *Allowances transferable from the opt-in source to each replacement unit.* The number of allowances transferable from the opt-in source to each replacement unit for the replacement of thermal energy is calculated as follows:

$$\begin{array}{c}\text{transferable allowances}\\ \text{for the replacement unit}\end{array} = \frac{\begin{array}{c}\text{Fuel Associated with}\\ \text{Qualifying thermal energy}\end{array} \times \begin{array}{c}\text{allowable } SO_2 \text{ emission rate}_{\text{replacement unit}}\\ \text{(in lb/mmBtu)}\end{array}}{2000}$$

where,

''Allowable SO_2 emission rate'' for the replacement unit is as defined in paragraph (a)(3)(vii) of this section;

''Fuel associated with qualifying thermal energy'' is as defined in paragraph (b)(2) of this section;

(c) *Transfer prohibition.* The allowances transferred from the opt-in source to each replacement unit shall not be transferred from the compliance account of the source that includes the replacement unit of the replacement unit to any other Allowance Tracking System account.

(d) *Compliance*—(1) *Annual compliance certification report.* (i) As required for all opt-in sources, the designated representative of the opt-in source covered by a thermal energy plan must submit an opt-in utilization report for the calendar year as part of its annual compliance certification report under § 74.44(c)(1).

(ii) The designated representative of an opt-in source must submit a thermal energy compliance report for the calendar year as part of the annual compliance certification report, which must include the following elements in a format prescribed by the Administrator:

(A) The name, authorized account representative identification number, and telephone number of the designated representative of the opt-in source;

(B) The name, authorized account representative identification number, and telephone number of the designated representative of each replacement unit;

(C) The account identification number in the Allowance Tracking System of the source that includes the opt-in source;

(D) The account identification number in the Allowance Tracking System of each source that includes a replacement unit;

(E) The actual amount of total thermal energy reduced at the opt-in source during the calendar year, including all energy flows (steam, gas, or hot water) used for any process or in any heating or cooling application;

(F) The actual amount of thermal energy at each replacement unit, including all energy flows (steam, gas, or hot water) used for any process or in any heating or cooling application, replacing the thermal energy at the opt-in source;

(G) The actual amount of total thermal energy at each replacement unit after replacing thermal energy at the opt-in source, including all energy flows (steam, gas, or hot water) used for any process or in any heating or cooling application;

(H) Actual total fuel input at each replacement unit as determined in accordance with part 75 of this chapter;

(I) Calculations of allowance adjustments to be performed by the Administrator in accordance with paragraph (d)(2) of this section.

(2) *Allowance adjustments by Administrator.* (i) The Administrator will adjust the number of allowances in the compliance account for each source that includes the opt-in source or a replacement unit to reflect any changes between the estimated values submitted in the thermal energy plan pursuant to paragraph (a) of this section and the actual values submitted in the thermal energy compliance report pursuant to paragraph (d) of this section. The values to be considered for this adjustment include:

(A) The number of allowances transferable by the opt-in source to each replacement unit, calculated in paragraph (b) of this section using the actual, rather than estimated, thermal energy at the replacement unit replacing thermal energy at the opt-in source.

(B) The number of allowances deducted from the compliance account of the source that includes the opt-in source, calculated under § 74.44(b)(2).

(ii) If the opt-in source includes in the opt-in utilization report under § 74.44 estimates for reductions in heat input, then the Administrator will adjust the number of allowances in the compliance account for each source that includes the opt-in source or a replacement unit to reflect any differences between the estimated values submitted in the opt-in utilization report and the actual values submitted in the confirmation report pursuant to § 74.44(c)(2).

(3) *Liability*. The owners and operators of an opt-in source or a replacement unit governed by an approved thermal energy plan shall be liable for any violation of the plan or this section at that opt-in source or replacement unit that is governed by the thermal energy plan, including liability for fulfilling the obligations specified in part 77 of this chapter and section 411 of the Act.

[60 FR 17115, Apr. 4, 1995, as amended at 63 FR 18841, 18842, Apr. 16, 1998; 70 FR 25337, May 12, 2005]

§ 74.48 Transfer of allowances from the replacement of thermal energy—process sources. [Reserved]

§ 74.49 Calculation for deducting allowances.

(a) *Allowance deduction formula*. The following formula shall be used to determine the total number of allowances to be deducted for the calendar year from the allowances held in the compliance account of a source that includes an opt-in source as of the allowance transfer deadline applicable to that year:

Total allowances deducted = Tons emitted + Allowances deducted for reduced utilization where:

(1)(i) Except as provided in paragraph (a)(1)(ii) of this section, ''Tons emitted'' shall be the total tons of sulfur dioxide emitted by the opt-in source during the calendar year, as reported in accordance with subpart F of this part for combustion sources or subpart G of this part for process sources.

(ii) If the effective date of the opt-in source's permit took effect on a date other than January 1, ''Tons emitted'' for the first calendar year shall be the total tons of sulfur dioxide emitted by the opt-in source during the calendar quarters for which the opt-in source's opt-in permit is effective, as reported in accordance with subpart F of this part for combustion sources or subpart G of this part for process sources.

(2) ''Allowances deducted for reduced utilization'' shall be the total number of allowances deducted for reduced utilization as calculated in accordance with § 74.44 for combustion sources or § 74.45 for process sources.

(b) [Reserved]

[60 FR 17115, Apr. 4, 1995, as amended at 70 FR 25337, May 12, 2005]

§ 74.50 Deducting opt-in source allowances from ATS accounts.

(a)(1) *Deduction of allowances*. The Administrator may deduct any allowances that were allocated to an opt-in source under § 74.40 by removing, from any Allowance Tracking System accounts in which they are held, the allowances in an amount specified in paragraph (d) of this section, under the following circumstances:

(i) When the opt-in source has permanently shut down; or

(ii) When the opt-in source has been reconstructed; or

(iii) When the opt-in source becomes an affected unit under § 72.6 of this chapter; or

(iv) When the opt-in source fails to renew its opt-in permit.

(2) An opt-in allowance may not be deducted under paragraph (a)(1) of this section from any Allowance Tracking System Account other than the account of the source that includes opt-in source allocated such allowance:

(i) After the Administrator has completed the process of recordation as set forth in § 73.34(a) of this chapter following the deduction of allowances from the the compliance account of the source that includes the opt-in source for the year for which such allowance may first be used; or

(ii) If the opt-in source includes in the annual compliance certification report estimates of any reduction in heat input resulting from improved efficiency under § 74.44(a)(1)(i), after the Administrator has completed action on the confirmation report concerning such estimated reduction pursuant to § 74.44(c)(2)(iii)(E)(*3*), (*4*), and (*5*) for the year for which such allowance may first be used.

(b) *Method of deduction*. The Administrator will deduct allowances beginning with those allowances with the latest recorded date of transfer out of the the compliance account of the source that includes the opt-in source.

(c) *Notification of deduction*. When allowances are deducted, the Administrator will send a written notification

to the authorized account representative of each Allowance Tracking System account from which allowances were deducted. The notification will state:

(1) The serial numbers of all allowances deducted from the account,

(2) The reason for deducting the allowances, and

(3) The date of deduction of the allowances.

(d) *Amount of deduction.* The Administrator may deduct allowances in accordance with paragraph (a) of this section in an amount required to offset any excess emissions in accordance with part 77 of this chapter and when the source that includes the opt-in source does not hold allowances equal in number to and with the same or earlier compliance use date for the calendar years specified under § 74.46(b)(1) (i) through (iv) in an amount required to be deducted under § 74.46(b)(1) (i) through (iv).

[60 FR 17115, Apr. 4, 1995, as amended at 63 FR 18842, Apr. 16, 1998; 70 FR 25337, May 12, 2005]

Subpart F—Monitoring Emissions: Combustion Sources

§ 74.60 Monitoring requirements.

(a) *Monitoring requirements for combustion sources.* The owner or operator of each combustion source shall meet all of the requirements specified in part 75 of this chapter for the owners and operators of an affected unit to install, certify, operate, and maintain a continuous emission monitoring system, an excepted monitoring system, or an approved alternative monitoring system in accordance with part 75 of this chapter.

(b) *Monitoring requirements for opt-in sources.* The owner or operator of each opt-in source shall install, certify, operate, and maintain a continuous emission monitoring system, an excepted monitoring system, an approved alternative monitoring system in accordance with part 75 of this chapter.

§ 74.61 Monitoring plan.

(a) *Monitoring plan.* The designated representative of a combustion source shall meet all of the requirements specified under part 75 of this chapter for a designated representative of an affected unit to submit to the Administrator a monitoring plan that includes the information required in a monitoring plan under § 75.53 of this chapter. This monitoring plan shall be submitted as part of the combustion source's opt-in permit application under § 74.14 of this part.

(b) [Reserved]

Subpart G—Monitoring Emissions: Process Sources [Reserved]

PART 75—CONTINUOUS EMISSION MONITORING

Subpart A—General

Sec.
75.1 Purpose and scope.
75.2 Applicability.
75.3 General Acid Rain Program provisions.
75.4 Compliance dates.
75.5 Prohibitions.
75.6 Incorporation by reference.
75.7–75.8 [Reserved]

Subpart B—Monitoring Provisions

75.10 General operating requirements.
75.11 Specific provisions for monitoring SO_2 emissions.
75.12 Specific provisions for monitoring NO_X emission rate.
75.13 Specific provisions for monitoring CO_2 emissions.
75.14 Specific provisions for monitoring opacity.
75.15 Special provisions for measuring Hg mass emissions using the excepted sorbent trap monitoring methodology.
75.16 Special provisions for monitoring emissions from common, bypass, and multiple stacks for SO_2 emissions and heat input determinations.
75.17 Specific provisions for monitoring emissions from common, bypass, and multiple stacks for NO_X emission rate.
75.18 Specific provisions for monitoring emissions from common and by-pass stacks for opacity.
75.19 Optional SO_2, NO_X, and CO_2 emissions calculation for low mass emissions (LME) units.

Subpart C—Operation and Maintenance Requirements

75.20 Initial certification and recertification procedures.
75.21 Quality assurance and quality control requirements.

75.22 Reference test methods.
75.23 Alternatives to standards incorporated by reference.
75.24 Out-of-control periods and adjustment for system bias.

Subpart D—Missing Data Substitution Procedures

75.30 General provisions.
75.31 Initial missing data procedures.
75.32 Determination of monitor data availability for standard missing data procedures.
75.33 Standard missing data procedures for SO_2, NO_X, Hg, and flow rate.
75.34 Units with add-on emission controls.
75.35 Missing data procedures for CO_2.
75.36 Missing data procedures for heat input rate determinations.
75.37 Missing data procedures for moisture.
75.38 Standard missing data procedures for Hg CEMS.
75.39 Missing data procedures for sorbent trap monitoring systems.

Subpart E—Alternative Monitoring Systems

75.40 General demonstration requirements.
75.41 Precision criteria.
75.42 Reliability criteria.
75.43 Accessibility criteria.
75.44 Timeliness criteria.
75.45 Daily quality assurance criteria.
75.46 Missing data substitution criteria.
75.47 Criteria for a class of affected units.
75.48 Petition for an alternative monitoring system.

Subpart F—Recordkeeping Requirements

75.50–75.52 [Reserved]
75.53 Monitoring plan.
75.54–75.56 [Reserved]
75.57 General recordkeeping provisions.
75.58 General recordkeeping provisions for specific situations.
75.59 Certification, quality assurance, and quality control record provisions.

Subpart G—Reporting Requirements

75.60 General provisions.
75.61 Notifications.
75.62 Monitoring plan submittals.
75.63 Initial certification or recertification application.
75.64 Quarterly reports.
75.65 Opacity reports.
75.66 Petitions to the Administrator.
75.67 Retired units petitions.

Subpart H—NO_X Mass Emissions Provisions

75.70 NO_X mass emissions provisions.
75.71 Specific provisions for monitoring NO_X and heat input for the purpose of calculating NO_X mass emissions.
75.72 Determination of NO_X mass emissions for common stack and multiple stack configurations.
75.73 Recordkeeping and reporting.
75.74 Annual and ozone season monitoring and reporting requirements.
75.75 Additional ozone season calculation procedures for special circumstances.

Subpart I—Hg Mass Emission Provisions

75.80 General provisions.
75.81 Monitoring of Hg mass emissions and heat input at the unit level.
75.82 Monitoring of Hg mass emissions and heat input at common and multiple stacks.
75.83 Calculation of Hg mass emissions and heat input rate.
75.84 Recordkeeping and reporting.
APPENDIX A TO PART 75—SPECIFICATIONS AND TEST PROCEDURES
APPENDIX B TO PART 75—QUALITY ASSURANCE AND QUALITY CONTROL PROCEDURES
APPENDIX C TO PART 75—MISSING DATA ESTIMATION PROCEDURES
APPENDIX D TO PART 75—OPTIONAL SO_2 EMISSIONS DATA PROTOCOL FOR GAS-FIRED AND OIL-FIRED UNITS
APPENDIX E TO PART 75—OPTIONAL NO_X EMISSIONS ESTIMATION PROTOCOL FOR GAS-FIRED PEAKING UNITS AND OIL-FIRED PEAKING UNITS
APPENDIX F TO PART 75—CONVERSION PROCEDURES
APPENDIX G TO PART 75—DETERMINATION OF CO_2 EMISSIONS
APPENDIX H TO PART 75—REVISED TRACEABILITY PROTOCOL NO. 1 [RESERVED]
APPENDIX I TO PART 75—OPTIONAL F—FACTOR/FUEL FLOW METHOD [RESERVED]
APPENDIX J TO PART 75—COMPLIANCE DATES FOR REVISED RECORDKEEPING REQUIREMENTS AND MISSING DATA PROCEDURES [RESERVED]
APPENDIX K TO PART 75—QUALITY ASSURANCE AND OPERATING PROCEDURES FOR SORBENT TRAP MONITORING SYSTEMS

AUTHORITY: 42 U.S.C. 7601 and 7651K, and 7651K note.

SOURCE: 58 FR 3701, Jan. 11, 1993, unless otherwise noted.

EDITORIAL NOTE: Nomenclature changes to part 75 appear at 67 FR 40476, June 12, 2002.

Subpart A—General

§ 75.1 Purpose and scope.

(a) *Purpose*. The purpose of this part is to establish requirements for the monitoring, recordkeeping, and reporting of sulfur dioxide (SO_2), nitrogen oxides (NO_X), and carbon dioxide (CO_2)

emissions, volumetric flow, and opacity data from affected units under the Acid Rain Program pursuant to sections 412 and 821 of the CAA, 42 U.S.C. 7401–7671q as amended by Public Law 101–549 (November 15, 1990) [the Act]. In addition, this part sets forth provisions for the monitoring, recordkeeping, and reporting of NO_X mass emissions with which EPA, individual States, or groups of States may require sources to comply in order to demonstrate compliance with a NO_X mass emission reduction program, to the extent these provisions are adopted as requirements under such a program.

(b) *Scope*. (1) The regulations established under this part include general requirements for the installation, certification, operation, and maintenance of continuous emission or opacity monitoring systems and specific requirements for the monitoring of SO_2 emissions, volumetric flow, NO_X emissions, opacity, CO_2 emissions and SO_2 emissions removal by qualifying Phase I technologies. Specifications for the installation and performance of continuous emission monitoring systems, certification tests and procedures, and quality assurance tests and procedures are included in appendices A and B to this part. Criteria for alternative monitoring systems and provisions to account for missing data from certified continuous emission monitoring systems or approved alternative monitoring systems are also included in the regulation.

(2) Statistical estimation procedures for missing data are included in appendix C to this part. Optional protocols for estimating SO_2 mass emissions from gas-fired or oil-fired units and NO_X emissions from gas-fired peaking or oil-fired peaking units are included in appendices D and E, respectively, to this part. Requirements for recording and recordkeeping of monitoring data and for quarterly electronic reporting also are specified. Procedures for conversion of monitoring data into units of the standard are included in appendix F to this part. Procedures for the monitoring and calculation of CO_2 emissions are included in appendix G of this part.

[58 FR 3701, Jan. 11, 1993; 58 FR 34126, June 23, 1993; 58 FR 40747, July 30, 1993; 63 FR 57498, Oct. 27, 1999; 67 FR 40421, June 12, 2002]

§ 75.2 Applicability.

(a) Except as provided in paragraphs (b) and (c) of this section, the provisions of this part apply to each affected unit subject to Acid Rain emission limitations or reduction requirements for SO_2 or NO_X.

(b) The provisions of this part do not apply to:

(1) A new unit for which a written exemption has been issued under § 72.7 of this chapter (any new unit that serves one or more generators with total nameplate capacity of 25 MWe or less and burns only fuels with a sulfur content of 0.05 percent or less by weight may apply to the Administrator for an exemption); or

(2) Any unit not subject to the requirements of the Acid Rain Program due to operation of any paragraph of § 72.6(b) of this chapter; or

(3) An affected unit for which a written exemption has been issued under § 72.8 of this chapter and an exception granted under § 75.67 of this part.

(c) The provisions of this part apply to sources subject to a State or federal NO_X mass emission reduction program, to the extent these provisions are adopted as requirements under such a program.

(d) The provisions of this part apply to sources subject to a State or Federal mercury (Hg) mass emission reduction program, to the extent that these provisions are adopted as requirements under such a program.

[58 FR 3701, Jan. 11, 1993, as amended at 58 FR 15716, Mar. 23, 1993; 60 FR 26516, May 17, 1995; 63 FR 57499, Oct. 27, 1998; 70 FR 28678, May 18, 2005]

§ 75.3 General Acid Rain Program provisions.

The provisions of part 72, including the following, shall apply to this part:

(a) § 72.2 (Definitions);

(b) § 72.3 (Measurements, Abbreviations, and Acronyms);

(c) § 72.4 (Federal Authority);

(d) § 72.5 (State Authority);

(e) § 72.6 (Applicability);

(f) § 72.7 (New Unit Exemption);
(g) § 72.8 (Retired Units Exemption);
(h) § 72.9 (Standard Requirements);
(i) § 72.10 (Availability of Information); and
(j) § 72.11 (Computation of Time).

In addition, the procedures for appeals of decisions of the Administrator under this part are contained in part 78 of this chapter.

§ 75.4 Compliance dates.

(a) The provisions of this part apply to each existing Phase I and Phase II unit on February 10, 1993. For substitution or compensating units that are so designated under the Acid Rain permit which governs that unit and contains the approved substitution or reduced utilization plan, pursuant to § 72.41 or § 72.43 of this chapter, the provisions of this part become applicable upon the issuance date of the Acid Rain permit. For combustion sources seeking to enter the Opt-in Program in accordance with part 74 of this chapter, the provisions of this part become applicable upon the submission of an opt-in permit application in accordance with § 74.14 of this chapter. The provisions of this part for the monitoring, recording, and reporting of NO_X mass emissions become applicable on the deadlines specified in the applicable State or federal NO_X mass emission reduction program, to the extent these provisions are adopted as requirements under such a program. In accordance with § 75.20, the owner or operator of each existing affected unit shall ensure that all monitoring systems required by this part for monitoring SO_2, NO_X, CO_2, opacity, moisture and volumetric flow are installed and that all certification tests are completed no later than the following dates (except as provided in paragraphs (d) through (i) of this section):

(1) For a unit listed in table 1 of § 73.10(a) of this chapter, November 15, 1993.

(2) For a substitution or a compensating unit that is designated under an approved substitution plan or reduced utilization plan pursuant to § 72.41 or § 72.43 of this chapter, or for a unit that is designated an early election unit under an approved NO_X compliance plan pursuant to part 76 of this chapter, that is not conditionally approved and that is effective for 1995, the earlier of the following dates:

(i) January 1, 1995; or

(ii) 90 days after the issuance date of the Acid Rain permit (or date of approval of permit revision) that governs the unit and contains the approved substitution plan, reduced utilization plan, or NO_X compliance plan.

(3) For either a Phase II unit, other than a gas-fired unit or an oil-fired unit, or a substitution or compensating unit that is not a substitution or compensating unit under paragraph (a)(2) of this section: January 1, 1995.

(4) For a gas-fired Phase II unit or an oil-fired Phase II unit, January 1, 1995, except that installation and certification tests for continuous emission monitoring systems for NO_X and CO_2 or excepted monitoring systems for NO_X under appendix E or CO_2 estimation under appendix G of this part shall be completed as follows:

(i) For an oil-fired Phase II unit or a gas-fired Phase II unit located in an ozone nonattainment area or the ozone transport region, not later than July 1, 1995; or

(ii) For an oil-fired Phase II unit or a gas-fired Phase II unit not located in an ozone nonattainment area or the ozone transport region, not later than January 1, 1996.

(5) For combustion sources seeking to enter the Opt-in Program in accordance with part 74 of this chapter, the expiration date of a combustion source's opt-in permit under § 74.14(e) of this chapter.

(b) In accordance with § 75.20, the owner or operator of each new affected unit shall ensure that all monitoring systems required under this part for monitoring of SO_2, NO_X, CO_2, opacity, and volumetric flow are installed and all certification tests are completed on or before the later of the following dates:

(1) January 1, 1995, except that for a gas-fired unit or oil-fired unit located in an ozone nonattainment area or the ozone transport region, the date for installation and completion of all certification tests for NO_X and CO_2 monitoring systems shall be July 1, 1995 and for a gas-fired unit or an oil-fired unit not located in an ozone nonattainment

area or the ozone transport region, the date for installation and completion of all certification tests for NO_X and CO_2 monitoring systems shall be January 1, 1996; or

(2) The earlier of 90 unit operating days or 180 calendar days after the date the unit commences commercial operation, notice of which date shall be provided under subpart G of this part.

(c) In accordance with § 75.20, the owner or operator of any unit affected under any paragraph of § 72.6(a)(3) (ii) through (vii) of this chapter shall ensure that all monitoring systems required under this part for monitoring of SO_2, NO_X, CO_2, opacity, and volumetric flow are installed and all certification tests are completed on or before the later of the following dates:

(1) January 1, 1995, except that for a gas-fired unit or oil-fired unit located in an ozone nonattainment area or the ozone transport region, the date for installation and completion of all certification tests for NO_X and CO_2 monitoring systems shall be July 1, 1995 and for a gas-fired unit or an oil-fired unit not located in an ozone nonattainment area or the ozone transport region, the date for installation and completion of all certification tests for NO_X and CO_2 monitoring systems shall be January 1, 1996; or

(2) The earlier of 90 unit operating days or 180 calendar days after the date the unit first operates after becoming subject to the requirements of the Acid Rain Program, notice of which date shall be provided under subpart G of this part.

(d) This paragraph, applies to affected units under the Acid Rain Program and to units subject to a State or Federal pollutant mass emissions reduction program that adopts the emission monitoring and reporting provisions of this part. In accordance with § 75.20, for an affected unit which, on the applicable compliance date, is either in long-term cold storage (as defined in § 72.2 of this chapter) or is shut down as the result of a planned outage or a forced outage, thereby preventing the required continuous monitoring system certification tests from being completed by the compliance date, the owner or operator shall provide notice of such unit storage or outage in accordance with § 75.61(a)(3) or § 75.61(a)(7), as applicable. For the planned and unplanned unit outages described in this paragraph, the owner or operator shall ensure that all of the continuous monitoring systems for SO_2, NO_X, CO_2, Hg, opacity, and volumetric flow rate required under this part (or under the applicable State or Federal mass emissions reduction program) are installed and that all required certification tests are completed no later than 90 unit operating days or 180 calendar days (whichever occurs first) after the date that the unit recommences commercial operation, notice of which date shall be provided under § 75.61(a)(3) or § 75.61(a)(7), as applicable. The owner or operator shall determine and report SO_2 concentration, NO_X emission rate, CO_2 concentration, Hg concentration, and flow rate data (as applicable) for all unit operating hours after the applicable compliance date until all of the required certification tests are successfully completed, using either:

(1) The maximum potential concentration of SO_2 (as defined in section 2.1.1.1 of appendix A to this part), the maximum potential NO_X emission rate, as defined in § 72.2 of this chapter, the maximum potential flow rate, as defined in section 2.1.4.1 of appendix A to this part, the maximum potential Hg concentration, as defined in section 2.1.7.1 of appendix A to this part, or the maximum potential CO_2 concentration, as defined in section 2.1.3.1 of appendix A to this part; or

(2) The conditional data validation provisions of § 75.20(b)(3); or

(3) Reference methods under § 75.22(b); or

(4) Another procedure approved by the Administrator pursuant to a petition under § 75.66.

(e) In accordance with § 75.20, if the owner or operator of an existing unit completes construction of a new stack, flue, flue gas desulfurization system or add-on NO_X emission controls after the applicable deadline in paragraph (a) of this section, then the owner or operator shall ensure that all monitoring systems required under this part for monitoring SO_2, NO_X, CO_2, opacity, and volumetric flow are installed on the new stack or duct and all certification

tests are completed not later than 90 unit operating days or 180 calendar days (whichever occurs first) after the date that emissions first exit to the atmosphere through the new stack, flue, flue gas desulfurization system or add-on NO_X emission controls, notice of which date shall be provided under subpart G of this part. Until emissions first pass through the new stack, flue, flue gas desulfurization system or add-on NO_X emission controls, the unit is subject to the appropriate deadline in paragraph (a) of this section. The owner or operator shall determine and report SO_2 concentration, NO_X emission rate, CO_2 concentration, and flow data for all unit operating hours after emissions first pass through the new stack, flue, flue gas desulfurization system or add-on NO_X emission controls until all required certification tests are successfully completed using either:

(1) The appropriate value for substitution of missing data upon recertification pursuant to §75.20(b)(3); or

(2) Reference methods under §75.22(b) of this part; or

(3) Another procedure approved by the Administrator pursuant to a petition under §75.66.

(f) In accordance with §75.20, the owner or operator of an affected gas-fired or oil-fired peaking unit, if planning to use appendix E of this part, shall ensure that the required certification tests for excepted monitoring systems under appendix E are completed for backup fuel, as defined in §72.2 of this chapter, no later than 90 unit operating days or 180 calendar days (whichever occurs first) after the date that the unit first combusts the backup fuel following the certification testing with the primary fuel. If the required testing is completed by this deadline, the appendix E correlation curve derived from the test results may be used for reporting data under this part beginning with the first date and hour that the backup fuel is combusted, provided that the fuel flowmeter for the backup fuel was certified as of that date and hour. If the required appendix E testing has not been successfully completed by the compliance date in this paragraph, then, until the testing is completed, the owner or operator shall report NO_X emission rate data for all unit operating hours that the backup fuel is combusted using either:

(1) The fuel-specific maximum potential NO_X emission rate, as defined in §72.2 of this chapter; or

(2) Reference methods under §75.22(b) of this part; or

(3) Another procedure approved by the Administrator pursuant to a petition under §75.66.

(g) The provisions of this paragraph shall apply unless an owner or operator is exempt from certifying a fuel flowmeter for use during combustion of emergency fuel under section 2.1.4.3 of appendix D to this part, in which circumstance the provisions of section 2.1.4.3 of appendix D shall apply. In accordance with §75.20, whenever the owner or operator of a gas-fired or oil-fired unit uses an excepted monitoring system under appendix D or E of this part and combusts emergency fuel as defined in §72.2 of this chapter, then the owner or operator shall ensure that a fuel flowmeter measuring emergency fuel is installed and the required certification tests for excepted monitoring systems are completed by no later than 30 unit operating days after the first date after January 1, 1995 that the unit combusts emergency fuel. For all unit operating hours that the unit combusts emergency fuel after January 1, 1995 until the owner or operator installs a flowmeter for emergency fuel and successfully completes all required certification tests, the owner or operator shall determine and report SO_2 mass emission data using either:

(1) The maximum potential fuel flow rate, as described in appendix D of this part, and the maximum sulfur content of the fuel, as described in section 2.1.1.1 of appendix A of this part;

(2) Reference methods under §75.22(b) of this part; or

(3) Another procedure approved by the Administrator pursuant to a petition under §75.66.

(h) [Reserved]

(i) In accordance with §75.20, the owner or operator of each affected unit at which SO_2 concentration is measured on a dry basis or at which moisture corrections are required to account for CO_2 emissions, NO_X emission

rate in lb/mmBtu, heat input, or NO_X mass emissions for units in a NO_X mass reduction program, shall ensure that the continuous moisture monitoring system required by this part is installed and that all applicable initial certification tests required under § 75.20(c)(5), (c)(6), or (c)(7) for the continuous moisture monitoring system are completed no later than the following dates:

(1) April 1, 2000, for a unit that is existing and has commenced commercial operation by January 2, 2000;

(2) For a new affected unit which has not commenced commercial operation by January 2, 2000, 90 unit operating days or 180 calendar days (whichever occurs first) after the date the unit commences commercial operation; or

(3) For an existing unit that is shutdown and is not yet operating by April 1, 2000, 90 unit operating days or 180 calendar days (whichever occurs first) after the date that the unit recommences commercial operation.

(j) If the certification tests required under paragraph (b) or (c) of this section have not been completed by the applicable compliance date, the owner or operator shall determine and report SO_2 concentration, NO_X emission rate, CO_2 concentration, and flow rate data for all unit operating hours after the applicable compliance date in this paragraph until all required certification tests are successfully completed using either:

(1) The maximum potential concentration of SO_2, as defined in section 2.1.1.1 of appendix A to this part, the maximum potential NO_X emission rate, as defined in § 72.2 of this chapter, the maximum potential flow rate, as defined in section 2.1.4.1 of appendix A to this part, or the maximum potential CO_2 concentration, as defined in section 2.1.3.1 of appendix A to this part;

(2) Reference methods under § 75.22(b); or

(3) Another procedure approved by the Administrator pursuant to a petition under § 75.66.

[60 FR 17131, Apr. 4, 1995, as amended at 60 FR 26516, May 17, 1995; 63 FR 57499, Oct. 27, 1998; 64 FR 28588, May 26, 1999; 67 FR 40421, June 12, 2002; 73 FR 4340, Jan. 24, 2008]

§ 75.5 Prohibitions.

(a) A violation of any applicable regulation in this part by the owners or operators or the designated representative of an affected source or an affected unit is a violation of the Act.

(b) No owner or operator of an affected unit shall operate the unit without complying with the requirements of §§ 75.2 through 75.75 and appendices A through G to this part.

(c) No owner or operator of an affected unit shall use any alternative monitoring system, alternative reference method, or any other alternative for the required continuous emission monitoring system without having obtained the Administrator's prior written approval in accordance with §§ 75.23, 75.48 and 75.66.

(d) No owner or operator of an affected unit shall operate the unit so as to discharge, or allow to be discharged, emissions of SO_2, NO_X or CO_2 to the atmosphere without accounting for all such emissions in accordance with the provisions of §§ 75.10 through 75.19.

(e) No owner or operator of an affected unit shall disrupt the continuous emission monitoring system, any portion thereof, or any other approved emission monitoring method, and thereby avoid monitoring and recording SO_2, NO_X, or CO_2 emissions discharged to the atmosphere, except for periods of recertification, or periods when calibration, quality assurance, or maintenance is performed pursuant to § 75.21 and appendix B of this part.

(f) No owner or operator of an affected unit shall retire or permanently discontinue use of the continuous emission monitoring system, any component thereof, the continuous opacity monitoring system, or any other approved emission monitoring system under this part, except under any one of the following circumstances:

(1) During the period that the unit is covered by an approved retired unit exemption under § 72.8 of this chapter that is in effect; or

(2) The owner or operator is monitoring emissions from the unit with another certified monitoring system or an excepted methodology approved by the Administrator for use at that unit that provides emissions data for the

same pollutant or parameter as the retired or discontinued monitoring system; or

(3) The designated representative submits notification of the date of recertification testing of a replacement monitoring system in accordance with §§ 75.20 and 75.61, and the owner or operator recertifies thereafter a replacement monitoring system in accordance with § 75.20.

[58 FR 3701, Jan. 11, 1993, as amended at 58 FR 40747, July 30, 1993; 60 FR 26517, May 17, 1995; 64 FR 28589, May 26, 1999]

§ 75.6 Incorporation by reference.

The materials listed in this section are incorporated by reference in the corresponding sections noted. These incorporations by reference were approved by the Director of the Federal Register in accordance with 5 U.S.C. 552(a) and 1 CFR part 51. These materials are incorporated as they existed on the date of approval, and a notice of any change in these materials will be published in the FEDERAL REGISTER. The materials are available for purchase at the corresponding address noted below and are available for inspection at the Public Information Reference Unit of the U.S. EPA, 401 M St., SW., Washington, DC and at the Library (MD–35), U.S. EPA, Research Triangle Park, North Carolina or at the National Archives and Records Administration (NARA). For information on the availability of this material at NARA, call 202–741–6030, or go to: *http://www.archives.gov/federal_register/code_of_federal_regulations/ibr_locations.html*.

(a) The following materials are available for purchase from the following addresses: American Society for Testing and Material (ASTM), 100 Barr harbor Drive, P.O. Box C–700, West Conshohocken, Pennsylvania 19428–2959; and the University Microfilms International 300 North Zeeb Road, Ann Arbor, Michigan 48106.

(1) ASTM D129–00, Standard Test Method for Sulfur in Petroleum Products (General Bomb Method), for appendices A and D of this part.

(2) D240–00, Standard Test Method for Heat of Combustion of Liquid Hydrocarbon Fuels by Bomb Calorimeter, for appendices A, D and F of this part.

(3) ASTM D287–92 (Reapproved 2000), Standard Test Method for API Gravity of Crude Petroleum and Petroleum Products (Hydrometer Method), for appendix D of this part.

(4) ASTM D388–99, Standard Classification of Coals by Rank, incorporation by reference for appendix F of this part.

(5) [Reserved]

(6) ASTM D1072–06, Standard Test Method for Total Sulfur in Fuel Gases by Combustion and Barium Chloride Titration, for appendix D of this part.

(7) ASTM D1217–993 (Reapproved 1998), Standard Test Method for Density and Relative Density (Specific Gravity) of Liquids by Bingham Pycnometer, for appendix D of this part.

(8) ASTM D1250–07 , Standard Guide for Use of the Petroleum Measurement Tables, for appendix D of this part.

(9) ASTM D1298–99, Standard Test Method for Density, Relative Density (Specific Gravity) or API Gravity of Crude Petroleum and Liquid Petroleum Products by Hydrometer Method, for appendix D of this part.

(10) ASTM D1480–93 (Reapproved 1997), Standard Test Method for Density and Relative Density (Specific Gravity) of Viscous Materials by Bingham Pycnometer, for appendix D of this part.

(11) ASTM D1481–93 (Reapproved 1997), Standard Test Method for Density and Relative Density (Specific Gravity) of Viscous Materials by Lipkin Bicapillary Pycnometer, for appendix D of this part.

(12) ASTM D1552–01, Standard Test Method for Sulfur in Petroleum Products (High-Temperature Method), for appendices A and D of the part.

(13) ASTM D1826–94 (Reapproved 1998), Standard Test Method for Calorific (Heating) Value of Gases in Natural Gas Range by Continuous Recording Calorimeter, for appendices D and F to this part.

(14) ASTM D1945–96 (Reapproved 2001), Standard Test Method for Analysis of Natural Gas by Gas Chromatography, for appendices F and G of this part.

(15) ASTM D1946–90 (Reapproved 2006), Standard Practice for Analysis of Reformed Gas by Gas Chromatography, for appendices F and G of this part.

(16) [Reserved]

(17) ASTM D2013–01, Standard Practice for Preparing Coal Samples for Analysis, for appendix F of this part.

(18) [Reserved]

(19) ASTM D2234–00, Standard Practice for Collection of a Gross Sample of Coal, for appendix F of this part.

(20) [Reserved]

(21) ASTM D2502–92 (Reapproved 1996), Standard Test Method for Estimation of Molecular Weight (Relative Molecular Mass) of Petroleum Oils from Viscosity Measurements, for appendix G of this part.

(22) ASTM D2503–92 (Reapproved 1997), Standard Test Method for Relative Molecular Mass (Molecular Weight) of Hydrocarbons by Thermoelectric Measurement of Vapor Pressure, for appendix G of this part.

(23) ASTM D2622–98, Standard Test Method for Sulfur in Petroleum Products by Wavelength Dispersive X-ray Fluorescence Spectrometry, for appendices A and D of this part.

(24) ASTM D3174–00, Standard Test Method for Ash in the Analysis Sample of Coal and Coke from Coal, for appendix G of this part.

(25) ASTM D3176–89 (Reapproved 2002), Standard Practice for Ultimate Analysis of Coal and Coke, for appendices A and F of this part.

(26) ASTM D3177–02 (Reapproved 2007), Standard Test Methods for Total Sulfur in the Analysis Sample of Coal and Coke, for appendix A of this part.

(27) ASTM D5373–02 (Reapproved 2007) Standard Test Methods for Instrumental Determination of Carbon, Hydrogen, and Nitrogen in Laboratory Samples of Coal and Coke, for appendix G of this part.

(28) ASTM D3238–95 (Reapproved 2000), Standard Test Method for Calculation of Carbon Distribution and Structural Group Analysis of Petroleum Oils by the n-d-M Method, for appendix G of this part.

(29) ASTM D3246–96, Standard Test Method for Sulfur in Petroleum Gas by Oxidative Microcoulometry, for appendix D of this part.

(30) [Reserved]

(31) ASTM D3588–98, Standard Practice for Calculating Heat Value, Compressibility Factor, and Relative Density of Gaseous Fuels, for appendices D and F to this part.

(32) ASTM D4052–96 (Reapproved 2002), Standard Test Method for Density and Relative Density of Liquids by Digital Density Meter, for appendix D of this part.

(33) ASTM D4057–95 (Reapproved 2000), Standard Practice for Manual Sampling of Petroleum and Petroleum Products, for appendix D of this part.

(34) ASTM D4177–95 (Reapproved 2000), Standard Practice for Automatic Sampling of Petroleum and Petroleum Products, for appendix D of this part.

(35) ASTM D4239–02, Standard Test Methods for Sulfur in the Analysis Sample of Coal and Coke Using High-Temperature Tube Furnace Combustion Methods, for appendix A of this part.

(36) ASTM D4294–98, Standard Test Method for Sulfur in Petroleum and Petroleum Products by Energy-Dispersive X-ray Fluorescence Spectrometry, for appendices A and D of this part.

(37) ASTM D4468–85 (Reapproved 2006), Standard Test Method for Total Sulfur in Gaseous Fuels by Hydrogenolysis and Rateometric Colorimetry, for appendix D of this part.

(38) ASTM D4840–99 (Reapproved 2004), ''Standard Guide for Sample Chain-of-Custody Procedures,'' for appendix K of this part, section 7.2.9.

(39) ASTM D4891–89 (Reapproved 2006), Standard Test Method for Heating Value of Gases in Natural Gas Range by Stoichiometric Combustion, for appendices D and F to this part.

(40) ASTM D5291–02, Standard Test Methods for Instrumental Determination of Carbon, Hydrogen, and Nitrogen in Petroleum Products and Lubricants, for appendices F and G to this part.

(41) ASTM D5373–02 (Reapproved 2007), ''Standard Test Methods for Instrumental Determination of Carbon, Hydrogen, and Nitrogen in Laboratory Samples of Coal and Coke,'' for appendix G to this part.

(42) ASTM D5504–01, Standard Test Method for Determination of Sulfur Compounds in Natural Gas and Gaseous Fuels by Gas Chromatography and Chemiluminescence, for appendix D of this part.

(43) ASTM D6784–02, ''Standard Test Method for Elemental, Oxidized, Particle-Bound and Total Mercury in Flue Gas Generated from Coal-Fired Stationary Sources (Ontario Hydro Method),'' for § 75.22(a)(7) and (b)(5).

(44) ASTM D6911–03, ''Guide for Packaging and Shipping Environmental Samples for Laboratory Analysis,'' for appendix K of this part, section 7.2.8.

(45) ASTM D6667–04, Standard Test Method for Determination of Total Volatile Sulfur in Gaseous Hydrocarbons and Liquefied Petroleum Gases by Ultraviolet Fluorescence, for appendix D of this part.

(46) ASTM D4809–00, Standard Test Method for Heat of Combustion of Liquid Hydrocarbon Fuels by Bomb Calorimeter (Precision Method), for appendices D and F of this part.

(47) ASTM D5865–01a, Standard Test Method for Gross Calorific Value of Coal and Coke, for appendices A, D, and F of this part.

(48) ASTM D7036–04, Standard Practice for Competence of Air Emission Testing Bodies, for appendices A, B, and E of this part.

(49) ASTM D5453–06, Standard Test Method for Determination of Total Sulfur in Light Hydrocarbons, Spark Ignition Engine Fuel, Diesel Engine Fuel, and Engine Oil by Ultraviolet Fluorescence, for appendix D of this part.

(b) The following materials are available for purchase from the American Society of Mechanical Engineers (ASME), 22 Law Drive, P.O. Box 2900, Fairfield, New Jersey 07007–2900:

(1) ASME MFC–3M–2004 (Revision of ASME MFC–3M–1989 (R1995)), Measurement of Fluid Flow in Pipes Using Orifice, Nozzle, and Venturi, for appendix D of this part.

(2) ASME MFC–4M–1986 (Reaffirmed 1997), Measurement of Gas Flow by Turbine Meters, for appendix D of this part.

(3) ASME-MFC–5M–1985 (Reaffirmed 1994), Measurement of Liquid Flow in Closed Conduits Using Transit-Time Ultrasonic Flowmeters, for appendix D of this part.

(4) ASME MFC–6M–1998, Measurement of Fluid Flow in Pipes Using Vortex Flowmeters, for appendix D of this part.

(5) ASME MFC–7M–1987 (Reaffirmed 1992), Measurement of Gas Flow by Means of Critical Flow Venturi Nozzles, for appendix D of this part.

(6) ASME MFC–9M–1988 (Reaffirmed 2001), Measurement of Liquid Flow in Closed Conduits by Weighing Method, for appendix D of this part.

(c) The following materials are available for purchase from the American National Standards Institute (ANSI), 25 West 43rd Street, Fourth Floor, New York, New York 10036:

(1) ISO 8316: 1987(E) Measurement of Liquid Flow in closed Conduits-Method by Collection of the Liquid in a Volumetric Tank, for appendices D and E of this part.

(2) [Reserved]

(d) The following materials are available for purchase from the following address: Gas Processors Association (GPA), 6526 East 60th Street, Tulsa, Oklahoma 74143:

(1) GPA Standard 2172–96, Calculation of Gross Heating Value, Relative Density and Compressibility Factor for Natural Gas Mixtures from Compositional Analysis, for appendices D, E, and F of this part.

(2) GPA Standard 2261–00, Analysis for Natural Gas and Similar Gaseous Mixtures by Gas Chromatography, for appendices D, F, and G of this part.

(e) The following American Gas Association materials are available for purchase from the following address: ILI Infodisk, 610 Winters Avenue, Paramus, New Jersey 07652:

(1) American Gas Association Report No. 3: Orifice Metering of Natural Gas and Other Related Hydrocarbon Fluids, Part 1: General Equations and Uncertainty Guidelines (October 1990 Edition), Part 2: Specification and Installation Requirements (February 1991 Edition) and Part 3: Natural Gas Applications (August 1992 Edition), for appendices D and E of this part.

(2) American Gas Association Transmission Measurement Committee Report No. 7: Measurement of Gas by Turbine Meters (Second Revision, April, 1996), for appendix D to this part.

(f) The following materials are available for purchase from the following address: American Petroleum Institute, Publications Department, 1220 L Street NW, Washington, DC 20005–4070.

(1) American Petroleum Institute (API) Manual of Petroleum Measurement Standards, Chapter 3—Tank Gauging, Section 1A, Standard Practice for the Manual Gauging of Petroleum and Petroleum Products, Second Edition, August 2005; Section 1B—Standard Practice for Level Measurement of Liquid Hydrocarbons in Stationary Tanks by Automatic Tank Gauging, Second Edition June 2001; Section 2—Standard Practice for Gauging Petroleum and Petroleum Products in Tank Cars, First Edition, August 1995 (Reaffirmed March 2006); Section 3—Standard Practice for Level Measurement of Liquid Hydrocarbons in Stationary Pressurized Storage Tanks by Automatic Tank Gauging, First Edition June 1996; Section 4—Standard Practice for Level Measurement of Liquid Hydrocarbons on Marine Vessels by Automatic Tank Gauging, First Edition April 1995 (Reaffirmed, March 2006); and Section 5—Standard Practice for Level Measurement of Light Hydrocarbon Liquids Onboard Marine Vessels by Automatic Tank Gauging, First Edition March 1997 (Reaffirmed, March 2003); for § 75.19.

(2) Shop Testing of Automatic Liquid Level Gages, Bulletin 2509 B, December 1961 (Reaffirmed August 1987, October 1992), for § 75.19.

(3) American Petroleum Institute (API) Manual of Petroleum Measurement Standards, Chapter 4—Proving Systems, Section 2—Pipe Provers (Provers Accumulating at Least 10,000 Pulses), Second Edition, March 2001, and Section 5—Master-Meter Provers, Second Edition, May 2000, for appendix D to this part.

(4) American Petroleum Institute (API) Manual of Petroleum Measurement Standards, Chapter 22—Testing Protocol, Section 2—Differential Pressure Flow Measurement Devices (First Edition, August 2005), for appendix D to this part.

[58 FR 3701, Jan. 11, 1993, as amended at 60 FR 26517, May 17, 1995; 61 FR 59157, Nov. 20, 1996; 63 FR 57499, Oct. 27, 1998; 64 FR 28589, May 26, 1999; 67 FR 40422, June 12, 2002; 70 FR 28678, May 18, 2005; 70 FR 51269, Aug. 30, 2005; 73 FR 4341, Jan. 24, 2008]

EDITORIAL NOTE: At 70 FR 28678, May 18, 2005, § 75.6 was amended, however, certain amendments could not be incorporated due to inaccurate amendatory instruction.

§§ 75.7–75.8 [Reserved]

Subpart B—Monitoring Provisions

§ 75.10 General operating requirements.

(a) *Primary Measurement Requirement.* The owner or operator shall measure opacity, and all SO_2, NO_X, and CO_2 emissions for each affected unit as follows:

(1) To determine SO_2 emissions, the owner or operator shall install, certify, operate, and maintain, in accordance with all the requirements of this part, a SO_2 continuous emission monitoring system and a flow monitoring system with an automated data acquisition and handling system for measuring and recording SO_2 concentration (in ppm), volumetric gas flow (in scfh), and SO_2 mass emissions (in lb/hr) discharged to the atmosphere, except as provided in §§ 75.11 and 75.16 and subpart E of this part;

(2) To determine NO_X emissions, the owner or operator shall install, certify, operate, and maintain, in accordance with all the requirements of this part, a NO_X-diluent continuous emission monitoring system (consisting of a NO_X pollutant concentration monitor and an O_2 or CO_2 diluent gas monitor) with an automated data acquisition and handling system for measuring and recording NO_X concentration (in ppm), O_2 or CO_2 concentration (in percent O_2 or CO_2) and NO_X emission rate (in lb/mmBtu) discharged to the atmosphere, except as provided in §§ 75.12 and 75.17 and subpart E of this part. The owner or operator shall account for total NO_X emissions, both NO and NO_2, either by monitoring for both NO and NO_2 or by monitoring for NO only and adjusting the emissions data to account for NO_2;

(3) The owner or operator shall determine CO_2 emissions by using one of the following options, except as provided in § 75.13 and subpart E of this part:

(i) The owner or operator shall install, certify, operate, and maintain, in accordance with all the requirements of this part, a CO_2 continuous emission monitoring system and a flow monitoring system with an automated data

acquisition and handling system for measuring and recording CO_2 concentration (in ppm or percent), volumetric gas flow (in scfh), and CO_2 mass emissions (in tons/hr) discharged to the atmosphere;

(ii) The owner or operator shall determine CO_2 emissions based on the measured carbon content of the fuel and the procedures in appendix G of this part to estimate CO_2 emissions (in ton/day) discharged to the atmosphere; or

(iii) The owner or operator shall install, certify, operate, and maintain, in accordance with all the requirements of this part, a flow monitoring system and a CO_2 continuous emission monitoring system that uses an O_2 concentration monitor to determine CO_2 emissions (according to the procedures in appendix F of this part) with an automated data acquisition and handling system for measuring and recording O_2 concentration (in percent), CO_2 concentration (in percent), volumetric gas flow (in scfh), and CO_2 mass emissions (in tons/hr) discharged to the atmosphere;

(4) The owner or operator shall install, certify, operate, and maintain, in accordance with all the requirements in this part, a continuous opacity monitoring system with the automated data acquisition and handling system for measuring and recording the opacity of emissions (in percent opacity) discharged to the atmosphere, except as provided in §§ 75.14 and 75.18; and

(5) A single certified flow monitoring system may be used to meet the requirements of paragraphs (a)(1) and (a)(3) of this section. A single certified diluent monitor may be used to meet the requirements of paragraphs (a)(2) and (a)(3) of this section. A single automated data acquisition and handling system may be used to meet the requirements of paragraphs (a)(1) through (a)(4) of this section.

(b) *Primary Equipment Performance Requirements.* The owner or operator shall ensure that each continuous emission monitoring system required by this part meets the equipment, installation, and performance specifications in appendix A to this part; and is maintained according to the quality assurance and quality control procedures in appendix B to this part; and shall record SO_2 and NO_X emissions in the appropriate units of measurement (*i.e.*, lb/hr for SO_2 and lb/mmBtu for NO_X).

(c) *Heat Input Rate Measurement Requirement.* The owner or operator shall determine and record the heat input rate, in units of mmBtu/hr, to each affected unit for every hour or part of an hour any fuel is combusted following the procedures in appendix F to this part.

(d) *Primary equipment hourly operating requirements.* The owner or operator shall ensure that all continuous emission and opacity monitoring systems required by this part are in operation and monitoring unit emissions or opacity at all times that the affected unit combusts any fuel except as provided in § 75.11(e) and during periods of calibration, quality assurance, or preventive maintenance, performed pursuant to § 75.21 and appendix B of this part, periods of repair, periods of backups of data from the data acquisition and handling system, or recertification performed pursuant to § 75.20. The owner or operator shall also ensure, subject to the exceptions above in this paragraph, that all continuous opacity monitoring systems required by this part are in operation and monitoring opacity during the time following combustion when fans are still operating, unless fan operation is not required to be included under any other applicable Federal, State, or local regulation, or permit. The owner or operator shall ensure that the following requirements are met:

(1) The owner or operator shall ensure that each continuous emission monitoring system is capable of completing a minimum of one cycle of operation (sampling, analyzing, and data recording) for each successive 15-min interval. The owner or operator shall reduce all SO_2 concentrations, volumetric flow, SO_2 mass emissions, CO_2 concentration, O_2 concentration, CO_2 mass emissions (if applicable), NO_X concentration, NO_X emission rate, and Hg concentration data collected by the monitors to hourly averages. Hourly averages shall be computed using at least one data point in each fifteen minute quadrant of an hour, where the

unit combusted fuel during that quadrant of an hour. Notwithstanding this requirement, an hourly average may be computed from at least two data points separated by a minimum of 15 minutes (where the unit operates for more than one quadrant of an hour) if data are unavailable as a result of the performance of calibration, quality assurance, or preventive maintenance activities pursuant to § 75.21 and appendix B of this part, or backups of data from the data acquisition and handling system, or recertification, pursuant to § 75.20. The owner or operator shall use all valid measurements or data points collected during an hour to calculate the hourly averages. All data points collected during an hour shall be, to the extent practicable, evenly spaced over the hour.

(2) The owner or operator shall ensure that each continuous opacity monitoring system is capable of completing a minimum of one cycle of sampling and analyzing for each successive 10-sec period and one cycle of data recording for each successive 6-min period. The owner or operator shall reduce all opacity data to 6-min averages calculated in accordance with the provisions of part 51, appendix M of this chapter, except where the applicable State implementation plan or operating permit requires a different averaging period, in which case the State requirement shall satisfy this Acid Rain Program requirement.

(3) Failure of an SO_2, CO_2, or O_2 emissions concentration monitor, NO_X concentration monitor, Hg concentration monitor, flow monitor, moisture monitor, or NO_X-diluent continuous emission monitoring system to acquire the minimum number of data points for calculation of an hourly average in paragraph (d)(1) of this section shall result in the failure to obtain a valid hour of data and the loss of such component data for the entire hour. For a NO_X-diluent monitoring system, an hourly average NO_X emission rate in lb/mmBtu is valid only if the minimum number of data points is acquired by both the NO_X pollutant concentration monitor and the diluent monitor (O_2 or CO_2). For a moisture monitoring system consisting of one or more oxygen analyzers capable of measuring O_2 on a wet-basis and a dry-basis, an hourly average percent moisture value is valid only if the minimum number of data points is acquired for both the wet-and dry-basis measurements. If a valid hour of data is not obtained, the owner or operator shall estimate and record emissions, moisture, or flow data for the missing hour by means of the automated data acquisition and handling system, in accordance with the applicable procedure for missing data substitution in subpart D of this part.

(e) *Optional backup monitor requirements.* If the owner or operator chooses to use two or more continuous emission monitoring systems, each of which is capable of monitoring the same stack or duct at a specific affected unit, or group of units using a common stack, then the owner or operator shall designate one monitoring system as the primary monitoring system, and shall record this information in the monitoring plan, as provided for in § 75.53. The owner or operator shall designate the other monitoring system(s) as backup monitoring system(s) in the monitoring plan. The backup monitoring system(s) shall be designated as redundant backup monitoring system(s), non-redundant backup monitoring system(s), or reference method backup system(s), as described in § 75.20(d). When the certified primary monitoring system is operating and not out-of-control as defined in § 75.24, only data from the certified primary monitoring system shall be reported as valid, quality-assured data. Thus, data from the backup monitoring system may be reported as valid, quality-assured data only when the backup is operating and not out-of-control as defined in § 75.24 (or in the applicable reference method in appendix A of part 60 of this chapter) and when the certified primary monitoring system is not operating (or is operating but out-of-control). A particular monitor may be designated both as a certified primary monitor for one unit and as a certified redundant backup monitor for another unit.

(f) *Minimum measurement capability requirement.* The owner or operator shall ensure that each continuous emission

monitoring system is capable of accurately measuring, recording, and reporting data, and shall not incur an exceedance of the full scale range, except as provided in sections 2.1.1.5, 2.1.2.5, and 2.1.4.3 of appendix A to this part.

(g) *Minimum recording and recordkeeping requirements.* The owner or operator shall record and the designated representative shall report the hourly, daily, quarterly, and annual information collected under the requirements of this part as specified in subparts F and G of this part.

[58 FR 3701, Jan. 11, 1993, as amended at 60 FR 26519, May 17, 1995; 64 FR 28590, May 26, 1999; 67 FR 40422, June 12, 2002; 70 FR 28678, May 18, 2005]

§ 75.11 Specific provisions for monitoring SO_2 emissions.

(a) *Coal-fired units.* The owner or operator shall meet the general operating requirements in § 75.10 for an SO_2 continuous emission monitoring system and a flow monitoring system for each affected coal-fired unit while the unit is combusting coal and/or any other fuel, except as provided in paragraph (e) of this section, in § 75.16, and in subpart E of this part. During hours in which only gaseous fuel is combusted in the unit, the owner or operator shall comply with the applicable provisions of paragraph (e)(1), (e)(2), or (e)(3) of this section.

(b) *Moisture correction.* Where SO_2 concentration is measured on a dry basis, the owner or operator shall either:

(1) Report the appropriate fuel-specific default moisture value for each unit operating hour, selected from among the following: 3.0%, for anthracite coal; 6.0% for bituminous coal; 8.0% for sub-bituminous coal; 11.0% for lignite coal; 13.0% for wood and 14.0% for natural gas (boilers, only); or

(2) Install, operate, maintain, and quality assure a continuous moisture monitoring system for measuring and recording the moisture content of the flue gases, in order to correct the measured hourly volumetric flow rates for moisture when calculating SO_2 mass emissions (in lb/hr) using the procedures in appendix F to this part. The following continuous moisture monitoring systems are acceptable: a continuous moisture sensor; an oxygen analyzer (or analyzers) capable of measuring O_2 both on a wet basis and on a dry basis; or a stack temperature sensor and a moisture look-up table, i.e., a psychrometric chart (for saturated gas streams following wet scrubbers or other demonstrably saturated gas streams, only). The moisture monitoring system shall include as a component the automated data acquisition and handling system (DAHS) for recording and reporting both the raw data (e.g., hourly average wet-and dry-basis O_2 values) and the hourly average values of the stack gas moisture content derived from those data. When a moisture look-up table is used, the moisture monitoring system shall be represented as a single component, the certified DAHS, in the monitoring plan for the unit or common stack.

(c) *Unit with no location for a flow monitor meeting siting requirements.* Where no location exists that satisfies the minimum physical siting criteria in appendix A to this part for installation of a flow monitor in either the stack or the ducts serving an affected unit or installation of a flow monitor in either the stack or ducts is demonstrated to the satisfaction of the Administrator to be technically infeasible, either:

(1) The designated representative shall petition the Administrator for an alternative method for monitoring volumetric flow in accordance with § 75.66; or

(2) The owner or operator shall construct a new stack or modify existing ductwork to accommodate the installation of a flow monitor, and the designated representative shall petition the Administrator for an extension of the required certification date given in § 75.4 and approval of an interim alternative flow monitoring methodology in accordance with § 75.66. The Administrator may grant existing Phase I affected units an extension to January 1, 1995, and existing Phase II affected units an extension to January 1, 1996 for the submission of the certification application for the purpose of constructing a new stack or making substantial modifications to ductwork for installation of a flow monitor; or

(3) The owner or operator shall install a flow monitor in any existing location in the stack or ducts serving the affected unit at which the monitor can achieve the performance specifications of this part.

(d) *Gas-fired and oil-fired units*. The owner or operator of an affected unit that qualifies as a gas-fired or oil-fired unit, as defined in § 72.2 of this chapter, based on information submitted by the designated representative in the monitoring plan, shall measure and record SO_2 emissions:

(1) By meeting the general operating requirements in § 75.10 for an SO_2 continuous emission monitoring system and flow monitoring system. If this option is selected, the owner or operator shall comply with the applicable provisions in paragraph (e)(1), (e)(2), or (e)(3) of this section during hours in which the unit combusts only gaseous fuel;

(2) By providing other information satisfactory to the Administrator using the applicable procedures specified in appendix D to this part for estimating hourly SO_2 mass emissions; or

(3) By using the low mass emissions excepted methodology in § 75.19(c) for estimating hourly SO_2 mass emissions if the affected unit qualifies as a low mass emissions unit under § 75.19(a) and (b). If this option is selected for SO_2, the LME methodology must also be used for NO_X and CO_2 when these parameters are required to be monitored by applicable program(s).

(e) *Special considerations during the combustion of gaseous fuels*. The owner or operator of an affected unit that uses a certified flow monitor and a certified diluent gas (O_2 or CO_2) monitor to measure the unit heat input rate shall, during any hours in which the unit combusts only gaseous fuel, determine SO_2 emissions in accordance with paragraph (e)(1) or (e)(3) of this section, as applicable.

(1) If the gaseous fuel qualifies for a default SO_2 emission rate under Section 2.3.1.1, 2.3.2.1.1, or 2.3.6(b) of appendix D to this part, the owner or operator may determine SO_2 emissions by using Equation F–23 in appendix F to this part. Substitute into Equation F–23 the hourly heat input, calculated using the certified flow monitoring system and the certified diluent monitor (according to the applicable equation in section 5.2 of appendix F to this part), in conjunction with the appropriate default SO_2 emission rate from section 2.3.1.1, 2.3.2.1.1, or 2.3.6(b) of appendix D to this part. When this option is chosen, the owner or operator shall perform the necessary data acquisition and handling system tests under § 75.20(c), and shall meet all quality control and quality assurance requirements in appendix B to this part for the flow monitor and the diluent monitor; or

(2) [Reserved]

(3) The owner or operator may determine SO_2 mass emissions by using a certified SO_2 continuous monitoring system, in conjunction with the certified flow rate monitoring system. However, if the gaseous fuel is very low sulfur fuel (as defined in § 72.2 of this chapter), the SO_2 monitoring system shall meet the following quality assurance provisions when the very low sulfur fuel is combusted:

(i) When conducting the daily calibration error tests of the SO_2 monitoring system, as required by section 2.1.1 in appendix B of this part, the zero-level calibration gas shall have an SO_2 concentration of 0.0 percent of span. This restriction does not apply if gaseous fuel is burned in the affected unit only during unit startup.

(ii) EPA recommends that the calibration response of the SO_2 monitoring system be adjusted, either automatically or manually, in accordance with the procedures for routine calibration adjustments in section 2.1.3 of appendix B to this part, whenever the zero-level calibration response during a required daily calibration error test exceeds the applicable performance specification of the instrument in section 3.1 of appendix A to this part (*i.e.*, ±2.5 percent of the span value or ±5 ppm, whichever is less restrictive).

(iii) Any bias-adjusted hourly average SO_2 concentration of less than 2.0 ppm recorded by the SO_2 monitoring system shall be adjusted to a default value of 2.0 ppm, for reporting purposes. Such adjusted hourly averages shall be considered to be quality-assured data, provided that the monitoring system is operating and is not out-of-control with respect to any of

the quality assurance tests required by appendix B of this part (*i.e.*, daily calibration error, linearity and relative accuracy test audit).

(iv) In accordance with the requirements of section 2.1.1.2 of appendix A to this part, for units that sometimes burn gaseous fuel that is very low sulfur fuel (as defined in § 72.2 of this chapter) and at other times burn higher sulfur fuel(s) such as coal or oil, a second low-scale SO_2 measurement range is not required when the very low sulfur gaseous fuel is combusted. For units that burn only gaseous fuel that is very low sulfur fuel and burn no other type(s) of fuel(s), the owner or operator shall set the span of the SO_2 monitoring system to a value no greater than 200 ppm.

(4) The provisions in paragraph (e)(1) of this section, may also be used for the combustion of a solid or liquid fuel that meets the definition of very low sulfur fuel in § 72.2 of this chapter, mixtures of such fuels, or combinations of such fuels with gaseous fuel, if the owner or operator submits a petition under § 75.66 for a default SO_2 emission rate for each fuel, mixture or combination, and if the Administrator approves the petition.

[58 FR 3701, Jan. 11, 1993, as amended at 60 FR 26520, 26566, May 17, 1995; 61 FR 59157, Nov. 20, 1996; 63 FR 57499, Oct. 27, 1998; 64 FR 28590, May 26, 1999; 67 FR 40423, June 12, 2002; 73 FR 4342, Jan. 24, 2008]

§ 75.12 Specific provisions for monitoring NO_X emission rate.

(a) *Coal-fired units, gas-fired nonpeaking units or oil-fired nonpeaking units.* The owner or operator shall meet the general operating requirements in § 75.10 of this part for a NO_X continuous emission monitoring system (CEMS) for each affected coal-fired unit, gas-fired nonpeaking unit, or oil-fired nonpeaking unit, except as provided in paragraph (d) of this section, § 75.17, and subpart E of this part. The diluent gas monitor in the NO_X-diluent CEMS may measure either O_2 or CO_2 concentration in the flue gases.

(b) *Moisture correction.* If a correction for the stack gas moisture content is needed to properly calculate the NO_X emission rate in lb/mmBtu, e.g., if the NO_X pollutant concentration monitor measures on a different moisture basis from the diluent monitor, the owner or operator shall either report a fuel-specific default moisture value for each unit operating hour, as provided in § 75.11(b)(1), or shall install, operate, maintain, and quality assure a continuous moisture monitoring system, as defined in § 75.11(b)(2). Notwithstanding this requirement, if Equation 19–3, 19–4 or 19–8 in Method 19 in appendix A to part 60 of this chapter is used to measure NO_X emission rate, the following fuel-specific default moisture percentages shall be used in lieu of the default values specified in § 75.11(b)(1): 5.0%, for anthracite coal; 8.0% for bituminous coal; 12.0% for sub-bituminous coal; 13.0% for lignite coal; 15.0% for wood and 18.0% for natural gas (boilers, only).

(c) *Determination of NO_X emission rate.* The owner or operator shall calculate hourly, quarterly, and annual NO_X emission rates (in lb/mmBtu) by combining the NO_X concentration (in ppm), diluent concentration (in percent O_2 or CO_2), and percent moisture (if applicable) measurements according to the procedures in appendix F to this part.

(d) *Gas-fired peaking units or oil-fired peaking units.* The owner or operator of an affected unit that qualifies as a gas-fired peaking unit or oil-fired peaking unit, as defined in § 72.2 of this chapter, based on information submitted by the designated representative in the monitoring plan shall comply with one of the following:

(1) Meet the general operating requirements in § 75.10 for a NO_X continuous emission monitoring system; or

(2) Provide information satisfactory to the Administrator using the procedure specified in appendix E of this part for estimating hourly NO_X emission rate. However, if in the years after certification of an excepted monitoring system under appendix E of this part, a unit's operations exceed a capacity factor of 20 percent in any calendar year or exceed a capacity factor of 10.0 percent averaged over three years, the owner or operator shall install, certify, and operate a NO_X-diluent continuous emission monitoring system no later than December 31 of the following calendar year. If the required CEMS has not been installed and certified by that

date, the owner or operator shall report the maximum potential NO_X emission rate (MER) (as defined in § 72.2 of this chapter) for each unit operating hour, starting with the first unit operating hour after the deadline and continuing until the CEMS has been provisionally certified.

(e) *Low mass emissions units.* Notwithstanding the requirements of paragraphs (a) and (d) of this section, the owner or operator of an affected unit that qualifies as a low mass emissions unit under § 75.19(a) and (b) shall comply with one of the following:

(1) Meet the general operating requirements in § 75.10 for a NO_X continuous emission monitoring system;

(2) Meet the requirements specified in paragraph (d)(2) of this section for using the excepted monitoring procedures in appendix E to this part, if applicable; or

(3) Use the low mass emissions excepted methodology in § 75.19(c) for estimating hourly NO_X emission rate and hourly NO_X mass emissions, if applicable under § 75.19(a) and (b). If this option is selected for NO_X, the LME methodology must also be used for SO_2 and CO_2 when these parameters are required to be monitored by applicable program(s).

(f) *Other units.* The owner or operator of an affected unit that combusts wood, refuse, or other material in addition to oil or gas shall comply with the monitoring provisions specified in paragraph (a) of this section.

[58 FR 3701, Jan. 11, 1993, as amended at 60 FR 26520, May 17, 1995; 63 FR 57499, Oct. 27, 1998; 64 FR 28591, May 26, 1999; 67 FR 40423, June 12, 2002; 73 FR 4342, Jan. 24, 2008]

§ 75.13 Specific provisions for monitoring CO_2 emissions.

(a) *CO_2 continuous emission monitoring system.* If the owner or operator chooses to use the continuous emission monitoring method, then the owner or operator shall meet the general operating requirements in § 75.10 for a CO_2 continuous emission monitoring system and flow monitoring system for each affected unit. The owner or operator shall comply with the applicable provisions specified in §§ 75.11(a) through (e) or § 75.16, except that the phrase ''CO_2 continuous emission monitoring system'' shall apply rather than ''SO_2 continuous emission monitoring system,'' the phrase ''CO_2 concentration'' shall apply rather than ''SO_2 concentration,'' the term ''maximum potential concentration of CO_2'' shall apply rather than ''maximum potential concentration of SO_2,'' and the phrase ''CO_2 mass emissions'' shall apply rather than ''SO_2 mass emissions.''

(b) *Determination of CO_2 emissions using appendix G to this part.* If the owner or operator chooses to use the appendix G method, then the owner or operator shall follow the procedures in appendix G to this part for estimating daily CO_2 mass emissions based on the measured carbon content of the fuel and the amount of fuel combusted. For units with wet flue gas desulfurization systems or other add-on emissions controls generating CO_2, the owner or operator shall use the procedures in appendix G to this part to estimate both combustion-related emissions based on the measured carbon content of the fuel and the amount of fuel combusted and sorbent-related emissions based on the amount of sorbent injected. The owner or operator shall calculate daily, quarterly, and annual CO_2 mass emissions (in tons) in accordance with the procedures in appendix G to this part.

(c) *Determination of CO_2 mass emissions using an O_2 monitor according to appendix F to this part.* If the owner or operator chooses to use the appendix F method, then the owner or operator shall determine hourly CO_2 concentration and mass emissions with a flow monitoring system; a continuous O_2 concentration monitor; fuel F and F_c factors; and, where O_2 concentration is measured on a dry basis (or where Equation F–14b in appendix F to this part is used to determine CO_2 concentration), either, a continuous moisture monitoring system, as specified in § 75.11(b)(2), or a fuel-specific default moisture percentage (if applicable), as defined in § 75.11(b)(1); and by using the methods and procedures specified in appendix F to this part. For units using a common stack, multiple stack, or bypass stack, the owner or operator may use the provisions of § 75.16, except that the phrase ''CO_2 continuous emission monitoring system'' shall apply rather

than ''SO_2 continuous emission monitoring system,'' the term ''maximum potential concentration of CO_2'' shall apply rather than ''maximum potential concentration of SO_2,'' and the phrase ''CO_2 mass emissions'' shall apply rather than ''SO_2 mass emissions.''

(d) *Determination of CO_2 mass emissions from low mass emissions units.* The owner or operator of a unit that qualifies as a low mass emissions unit under § 75.19(a) and (b) shall comply with one of the following:

(1) Meet the general operating requirements in § 75.10 for a CO_2 continuous emission monitoring system and flow monitoring system;

(2) Meet the requirements specified in paragraph (b) or (c) of this section for use of the methods in appendix G or F to this part, respectively; or

(3) Use the low mass emissions excepted methodology in § 75.19(c) for estimating hourly CO_2 mass emissions, if applicable under § 75.19(a) and (b). If this option is selected for CO_2, the LME methodology must also be used for NO_X and SO_2 when these parameters are required to be monitored by applicable program(s).

[58 FR 3701, Jan. 11, 1993, as amended at 60 FR 26521, May 17, 1995; 63 FR 57499, Oct. 27, 1998; 64 FR 28591, May 26, 1999; 67 FR 40423, June 12, 2002; 73 FR 4343, Jan. 24, 2008]

§ 75.14 Specific provisions for monitoring opacity.

(a) *Coal-fired units and oil-fired units.* The owner or operator shall meet the general operating provisions in § 75.10 of this part for a continuous opacity monitoring system for each affected coal-fired or oil-fired unit, except as provided in paragraphs (b), (c), and (d) of this section and in § 75.18. Each continuous opacity monitoring system shall meet the design, installation, equipment, and performance specifications in Performance Specification 1 in appendix B to part 60 of this chapter. Any continuous opacity monitoring system previously certified to meet Performance Specification 1 shall be deemed certified for the purposes of this part.

(b) *Unit with wet flue gas pollution control system.* If the owner or operator can demonstrate that condensed water is present in the exhaust flue gas stream and would impede the accuracy of opacity measurements, then the owner or operator of an affected unit equipped with a wet flue gas pollution control system for SO_2 emissions or particulates is exempt from the opacity monitoring requirements of this part.

(c) *Gas-fired units.* The owner or operator of an affected unit that qualifies as gas-fired, as defined in § 72.2 of this chapter, based on information submitted by the designated representative in the monitoring plan is exempt from the opacity monitoring requirements of this part. Whenever a unit previously categorized as a gas-fired unit is recategorized as another type of unit by changing its fuel mix, the owner or operator shall install, operate, and certify a continuous opacity monitoring system as required by paragraph (a) of this section by December 31 of the following calendar year.

(d) *Diesel-fired units and dual-fuel reciprocating engine units.* The owner or operator of an affected diesel-fired unit or a dual-fuel reciprocating engine unit is exempt from the opacity monitoring requirements of this part.

(e) Unit with a certified particulate matter (PM) monitoring system. If, for a particular affected unit, the owner or operator installs, certifies, operates, maintains, and quality-assures a continuous particulate matter (PM) monitoring system in accordance with Procedure 2 in appendix F to part 60 of this chapter, the unit shall be exempt from the opacity monitoring requirement of this part.

[58 FR 3701, Jan. 11, 1993, as amended at 61 FR 25581, May 22, 1996; 73 FR 4343, Jan. 24, 2008]

§ 75.15 Special provisions for measuring Hg mass emissions using the excepted sorbent trap monitoring methodology.

For an affected coal-fired unit under a State or Federal Hg mass emission reduction program that adopts the provisions of subpart I of this part, if the owner or operator elects to use sorbent trap monitoring systems (as defined in § 72.2 of this chapter) to quantify Hg mass emissions, the guidelines in paragraphs (a) through (l) of this section

shall be followed for this excepted monitoring methodology:

(a) For each sorbent trap monitoring system (whether primary or redundant backup), the use of paired sorbent traps, as described in appendix K to this part, is required;

(b) Each sorbent trap shall have both a main section, a backup section, and a third section to allow spiking with a calibration gas of known Hg concentration, as described in appendix K to this part;

(c) A certified flow monitoring system is required;

(d) Correction for stack gas moisture content is required, and in some cases, a certified O_2 or CO_2 monitoring system is required (see § 75.81(a)(4));

(e) Each sorbent trap monitoring system shall be installed and operated in accordance with appendix K to this part. The automated data acquisition and handling system shall ensure that the sampling rate is proportional to the stack gas volumetric flow rate.

(f) At the beginning and end of each sample collection period, and at least once in each unit operating hour during the collection period, the gas flow meter reading shall be recorded.

(g) After each sample collection period, the mass of Hg adsorbed in each sorbent trap (in all three sections) shall be determined according to the applicable procedures in appendix K to this part.

(h) The hourly Hg mass emissions for each collection period are determined using the results of the analyses in conjunction with contemporaneous hourly data recorded by a certified stack flow monitor, corrected for the stack gas moisture content. For each pair of sorbent traps analyzed, the average of the two Hg concentrations shall be used for reporting purposes under (75.84(f). Notwithstanding this requirement, if, due to circumstances beyond the control of the owner or operator, one of the paired traps is accidentally lost, damaged, or broken and cannot be analyzed, the results of the analysis of the other trap may be used for reporting purposes, provided that:

(1) The other trap has met all of the applicable quality-assurance requirements of this part; and

(2) The Hg concentration measured by the other trap is multiplied by a factor of 1.111.

(i) All unit operating hours for which valid Hg concentration data are obtained with the primary sorbent trap monitoring system (as verified using the quality assurance procedures in appendix K to this part) shall be reported in the electronic quarterly report under § 75.84(f). For hours in which data from the primary monitoring system are invalid, the owner or operator may, in accordance with § 75.20(d), report valid Hg concentration data from: A certified redundant backup CEMS or sorbent trap monitoring system; a certified non-redundant backup CEMS or sorbent trap monitoring system; or an applicable reference method under § 75.22. If no quality-assured Hg concentration are available for a particular hour, the owner or operator shall report the appropriate substitute data value in accordance with § 75.39.

(j) Initial certification requirements and additional quality-assurance requirements for the sorbent trap monitoring systems are found in § 75.20(c)(9), in section 6.5.7 of appendix A to this part, in sections 1.5 and 2.3 of appendix B to this part, and in appendix K to this part.

(k) During each RATA of a sorbent trap monitoring system, the type of sorbent material used by the traps shall be the same as for daily operation of the monitoring system. A new pair of traps shall be used for each RATA run. However, the size of the traps used for the RATA may be smaller than the traps used for daily operation of the system.

(l) Whenever the type of sorbent material used by the traps is changed, the owner or operator shall conduct a diagnostic RATA of the modified sorbent trap monitoring system within 720 unit or stack operating hours after the date and hour when the new sorbent material is first used. If the diagnostic RATA is passed, data from the modified system may be reported as quality-assured, back to the date and hour when the new sorbent material was first used. If the RATA is failed, all data from the modified system shall be invalidated, back to the date and hour when the new sorbent material was

first used, and data from the system shall remain invalid until a subsequent RATA is passed. If the required RATA is not completed within 720 unit or stack operating hours, but is passed on the first attempt, data from the modified system shall be invalidated beginning with the first operating hour after the 720 unit or stack operating hour window expires and data from the system shall remain invalid until the date and hour of completion of the successful RATA.

[70 FR 28678, May 18, 2005, as amended at 72 FR 51527, Sept. 7, 2007; 73 FR 4343, Jan. 24, 2008]

§ 75.16 Special provisions for monitoring emissions from common, bypass, and multiple stacks for SO_2 emissions and heat input determinations.

(a) [Reserved]

(b) *Common stack procedures*. The following procedures shall be used when more than one unit uses a common stack:

(1) *Unit utilizing common stack with other affected unit(s)*. When a Phase I or Phase II affected unit utilizes a common stack with one or more other Phase I or Phase II affected units, but no nonaffected units, the owner or operator shall either:

(i) Install, certify, operate, and maintain an SO_2 continuous emission monitoring system and flow monitoring system in the duct to the common stack from each affected unit; or

(ii) Install, certify, operate, and maintain an SO_2 continuous emission monitoring system and flow monitoring system in the common stack and combine emissions for the affected units for recordkeeping and compliance purposes.

(A) Combine emissions for the affected units for recordkeeping and compliance purposes; or

(B) Provide information satisfactory to the Administrator on methods for apportioning SO_2 mass emissions measured in the common stack to each of the Phase I and Phase II affected units. The designated representative shall provide the information to the Administrator through a petition submitted under § 75.66. The Administrator may approve such substitute methods for apportioning SO_2 mass emissions measured in a common stack whenever the method ensures complete and accurate accounting of all emissions regulated under this part.

(2) *Unit utilizing common stack with nonaffected unit(s)*. When one or more Phase I or Phase II affected units utilizes a common stack with one or more nonaffected units, the owner or operator shall either:

(i) Install, certify, operate, and maintain an SO_2 continuous emission monitoring system and flow monitoring system in the duct to the common stack from each Phase I and Phase II unit; or

(ii) Install, certify, operate, and maintain an SO_2 continuous emission monitoring system and flow monitoring system in the common stack; and

(A) Designate the nonaffected units as opt-in units in accordance with part 74 of this chapter and combine emissions for recordkeeping and compliance purposes; or

(B) Install, certify, operate, and maintain an SO_2 continuous emission monitoring system and flow monitoring system in the duct from each nonaffected unit; determine SO_2 mass emissions from the affected units as the difference between SO_2 mass emissions measured in the common stack and SO_2 mass emissions measured in the ducts of the nonaffected units, not to be reported as an hourly average value less than zero; combine emissions for the Phase I and Phase II affected units for recordkeeping and compliance purposes; and calculate and report SO_2 mass emissions from the Phase I and Phase II affected units, pursuant to an approach approved by the Administrator, such that these emissions are not underestimated; or

(C) Record the combined emissions from all units as the combined SO_2 mass emissions for the Phase I and Phase II affected units for recordkeeping and compliance purposes; or

(D) Petition through the designated representative and provide information satisfactory to the Administrator on methods for apportioning SO_2 mass emissions measured in the common stack to each of the units using the common stack and on reporting the SO_2 mass emissions. The Administrator

may approve such demonstrated substitute methods for apportioning and reporting SO_2 mass emissions measured in a common stack whenever the demonstration ensures that there is a complete and accurate accounting of all emissions regulated under this part and, in particular, that the emissions from any affected unit are not underestimated.

(c) *Unit with bypass stack.* Whenever any portion of the flue gases from an affected unit can be routed through a bypass stack so as to avoid the installed SO_2 continuous emission monitoring system and flow monitoring system, the owner or operator shall either:

(1) Install, certify, operate, and maintain separate SO_2 continuous emission monitoring systems and flow monitoring systems on the main stack and the bypass stack and calculate SO_2 mass emissions for the unit as the sum of the SO_2 mass emissions measured at the two stacks; or

(2) Monitor SO_2 mass emissions at the main stack using SO_2 and flow rate monitoring systems and measure SO_2 mass emissions at the bypass stack using the reference methods in § 75.22(b) for SO_2 and flow rate and calculate SO_2 mass emissions for the unit as the sum of the emissions recorded by the installed monitoring systems on the main stack and the emissions measured by the reference method monitoring systems; or

(3) Install, certify, operate, and maintain SO_2 and flow rate monitoring systems only on the main stack. If this option is chosen, report the following values for each hour during which emissions pass through the bypass stack: the maximum potential concentration of SO_2 as determined under section 2.1.1.1 of appendix A to this part (or, if available, the SO_2 concentration measured by a certified monitor located at the control device inlet may be reported instead), and the hourly volumetric flow rate value that would be substituted for the flow monitor installed on the main stack or flue under the missing data procedures in subpart D of this part if data from the flow monitor installed on the main stack or flue were missing for the hour. The maximum potential SO_2 concentration may be specific to the type of fuel combusted in the unit during the bypass (*see* § 75.33(b)(5)). The option in this paragraph, (c)(3), may only be used if use of the bypass stack is limited to unit startup, emergency situations (e.g., malfunction of a flue gas desulfurization system), and periods of routine maintenance of the flue gas desulfurization system or maintenance on the main stack. If this option is chosen, it is not necessary to designate the exhaust configuration as a multiple stack configuration in the monitoring plan required under § 75.53, with respect to SO_2 or any other parameter that is monitored only at the main stack. Calculate SO_2 mass emissions for the unit as the sum of the emissions calculated with the substitute values and the emissions recorded by the SO_2 and flow monitoring systems installed on the main stack.

(d) *Unit with multiple stacks or ducts.* When the flue gases from an affected unit utilize two or more ducts feeding into two or more stacks (that may include flue gases from other affected or nonaffected units), or when the flue gases utilize two or more ducts feeding into a single stack and the owner or operator chooses to monitor in the ducts rather than the stack, the owner or operator shall either:

(1) Install, certify, operate, and maintain an SO_2 continuous emission monitoring system and flow monitoring system in each duct feeding into the stack or stacks and determine SO_2 mass emissions from each affected unit as the sum of the SO_2 mass emissions recorded for each duct; or

(2) Install, certify, operate, and maintain an SO_2 continuous emission monitoring system and flow monitoring system in each stack. Determine SO_2 mass emissions from each affected unit as the sum of the SO_2 mass emissions recorded for each stack. Notwithstanding the prior sentence, if another unit also exhausts flue gases to one or more of the stacks, the owner or operator shall also comply with the applicable common stack requirements of this section to determine and record SO_2 mass emissions from the units using that stack and shall calculate and report SO_2 mass emissions from the affected

units and stacks, pursuant to an approach approved by the Administrator, such that these emissions are not underestimated.

(e) *Heat input rate*. The owner or operator of an affected unit using a common stack, bypass stack, or multiple stacks shall account for heat input rate according to the following:

(1) The owner or operator of an affected unit using a common stack, bypass stack, or multiple stack with a diluent monitor and a flow monitor on each stack may use the flow rate and diluent monitors to determine the heat input rate for the affected unit, using the procedures specified in paragraphs (b) through (d) of this section, except that the term ''heat input rate'' shall apply rather than ''SO_2 mass emissions'' or ''emissions'' and the phrase ''a diluent monitor and a flow monitor'' shall apply rather than ''SO_2 continuous emission monitoring system and flow monitoring system.'' The applicable equation in appendix F to this part shall be used to calculate the heat input rate from the hourly flow rate, diluent monitor measurements, and (if the equation in appendix F requires a correction for the stack gas moisture content) hourly moisture measurements. Notwithstanding the options for combining heat input rate in paragraph (b)(1)(ii) and (b)(2)(ii) of this section, the owner or operator of an affected unit with a diluent monitor and a flow monitor installed on a common stack to determine the combined heat input rate at the common stack shall also determine and report heat input rate to each individual unit, according to paragraph (e)(3) of this section.

(2) In the event that an owner or operator of a unit with a bypass stack does not install and certify a diluent monitor and flow monitoring system in a bypass stack, the owner or operator shall determine total heat input rate to the unit for each unit operating hour during which the bypass stack is used according to the missing data provisions for heat input rate under § 75.36 or the procedures for calculating heat input rate from fuel sampling and analysis in section 5.5 of appendix F to this part.

(3) The owner or operator of an affected unit with a diluent monitor and a flow monitor installed on a common stack to determine heat input rate at the common stack may choose to apportion the heat input rate from the common stack to each affected unit utilizing the common stack by using either of the following two methods, provided that all of the units utilizing the common stack are combusting fuel with the same F-factor found in section 3 of appendix F of this part. The heat input rate may be apportioned either by using the ratio of load (in MWe) for each individual unit to the total load for all units utilizing the common stack or by using the ratio of steam load (in 1000 lb/hr or mmBtu/hr thermal output) for each individual unit to the total steam load for all units utilizing the common stack, in conjunction with the appropriate unit and stack operating times. If using either of these apportionment methods, the owner or operator shall apportion according to section 5.6 of appendix F to this part.

(4) Notwithstanding paragraph (e)(1) of this section, any affected unit that is using the procedures in this part to meet the monitoring and reporting requirements of a State or federal NO_X mass emission reduction program must also meet the requirements for monitoring heat input rate in §§ 75.71, 75.72 and 75.75.

[60 FR 26522, May 17, 1995, as amended at 61 FR 25582, May 22, 1996; 61 FR 59158, Nov. 20, 1996; 64 FR 28591, May 26, 1999; 67 FR 40423, June 12, 2002; 67 FR 53504, Aug. 16, 2002; 73 FR 4343, Jan. 24, 2008]

§ 75.17 Specific provisions for monitoring emissions from common, bypass, and multiple stacks for NO_X emission rate.

Notwithstanding the provisions of paragraphs (a), (b), (c), and (d) of this section, the owner or operator of an affected unit that is using the procedures in this part to meet the monitoring and reporting requirements of a State or federal NO_X mass emission reduction program must also meet the provisions for monitoring NO_X emission rate in §§ 75.71 and 75.72.

(a) *Unit utilizing common stack with other affected unit(s)*. When an affected unit utilizes a common stack with one

or more affected units, but no nonaffected units, the owner or operator shall either:

(1) Install, certify, operate, and maintain a NO_X continuous emission monitoring system in the duct to the common stack from each affected unit; or

(2) Install, certify, operate, and maintain a NO_X continuous emission monitoring system in the common stack and follow the appropriate procedure in paragraphs (a)(2) (i) through (iii) of this section, depending on whether or not the units are required to comply with a NO_X emission limitation (in lb/mmBtu, annual average basis) pursuant to section 407(b) of the Act (referred to hereafter as ''NO_X emission limitation'').

(i) When each of the affected units has a NO_X emission limitation, the designated representative shall submit a compliance plan to the Administrator that indicates:

(A) Each unit will comply with the most stringent NO_X emission limitation of any unit utilizing the common stack; or

(B) Each unit will comply with the applicable NO_X emission limitation by averaging its emissions with the other unit(s) utilizing the common stack, pursuant to the emissions averaging plan submitted under part 76 of this chapter; or

(C) Each unit's compliance with the applicable NO_X emission limit will be determined by a method satisfactory to the Administrator for apportioning to each of the units the combined NO_X emission rate (in lb/mmBtu) measured in the common stack and for reporting the NO_X emission rate, as provided in a petition submitted by the designated representative. The Administrator may approve such demonstrated substitute methods for apportioning and reporting NO_X emission rate measured in a common stack whenever the demonstration ensures that there is a complete and accurate estimation of all emissions regulated under this part and, in particular, that the emissions from any unit with a NO_X emission limitation are not underestimated.

(ii) When none of the affected units has a NO_X emission limitation, the owner or operator and the designated representative have no additional obligations pursuant to section 407 of the Act and may record and report a combined NO_X emission rate (in lb/mmBtu) for the affected units utilizing the common stack.

(iii) When at least one of the affected units has a NO_X emission limitation and at least one of the affected units does not have a NO_X emission limitation, the owner or operator shall either:

(A) Install, certify, operate, and maintain NO_X and diluent monitors in the ducts from the affected units; or

(B) Develop, demonstrate, and provide information satisfactory to the Administrator on methods for apportioning the combined NO_X emission rate (in lb/mmBtu) measured in the common stack on each of the units. The Administrator may approve such demonstrated substitute methods for apportioning the combined NO_X emission rate measured in a common stack whenever the demonstration ensures complete and accurate estimation of all emissions regulated under this part.

(b) *Unit utilizing common stack with nonaffected unit(s).* When one or more affected units utilizes a common stack with one or more nonaffected units, the owner or operator shall either:

(1) Install, certify, operate, and maintain a NO_X-diluent continuous emission monitoring system in the duct from each affected unit; or

(2) Develop, demonstrate, and provide information satisfactory to the Administrator on methods for apportioning the combined NO_X emission rate (in lb/mmBtu) measured in the common stack for each of the units. The Administrator may approve such demonstrated substitute methods for apportioning the combined NO_X emission rate measured in a common stack whenever the demonstration ensures complete and accurate estimation of all emissions regulated under this part.

(c) *Unit with multiple stacks or ducts.* When the flue gases from an affected unit discharge to the atmosphere through two or more stacks or when flue gases from an affected unit utilize two or more ducts feeding into a single stack and the owner or operator chooses to monitor in the ducts rather than the stack, the owner or operator shall monitor the NO_X emission rate in a

way that is representative of each affected unit. Where another unit also exhausts flue gases to one or more of the stacks where monitoring systems are installed, the owner or operator shall also comply with the applicable common stack monitoring requirements of this section. The owner or operator shall either:

(1) Install, certify, operate, and maintain a NO_X-diluent continuous emission monitoring system and a flow monitoring system in each stack or duct and determine the NO_X emission rate for the unit as the Btu-weighted average of the NO_X emission rates measured in the stacks or ducts using the heat input estimation procedures in appendix F to this part. Alternatively, for units that are eligible to use the procedures of appendix D to this part, the owner or operator may monitor heat input and NO_X emission rate at the unit level, in lieu of installing flow monitors on each stack or duct. If this alternative unit-level monitoring is performed, report, for each unit operating hour, the highest emission rate measured by any of the NO_X-diluent monitoring systems installed on the individual stacks or ducts as the hourly NO_X emission rate for the unit, and report the hourly unit heat input as determined under appendix D to this part. Also, when this alternative unit-level monitoring is performed, the applicable NO_X missing data procedures in §§ 75.31 or 75.33 shall be used for each unit operating hour in which a quality-assured NO_X emission rate is not obtained for one or more of the individual stacks or ducts; or

(2) Provided that the products of combustion are well-mixed, install, certify, operate, and maintain a NO_X continuous emission monitoring system in one stack or duct from the affected unit and record the monitored value as the NO_X emission rate for the unit. The owner or operator shall account for NO_X emissions from the unit during all times when the unit combusts fuel. Therefore, this option shall not be used if the monitored stack or duct can be bypassed (*e.g.*, by using dampers). Follow the procedure in § 75.17(d) for units with bypass stacks. Further, this option shall not be used unless the monitored NO_X emission rate truly represents the NO_X emissions discharged to the atmosphere (*e.g.*, the option is disallowed if there are any additional NO_X emission controls downstream of the monitored location).

(d) *Unit with a main stack and bypass stack configuration.* For an affected unit with a discharge configuration consisting of a main stack and a bypass stack, the owner or operator shall either:

(1) Follow the procedures in paragraph (c)(1) of this section; or

(2) Install, certify, operate, and maintain a NO_X-diluent CEMS only on the main stack. If this option is chosen, it is not necessary to designate the exhaust configuration as a multiple stack configuration in the monitoring plan required under § 75.53, with respect to NO_X or any other parameter that is monitored only at the main stack. For each unit operating hour in which the bypass stack is used and the emissions are either uncontrolled (or the add-on controls are not documented to be operating properly), report the maximum potential NO_X emission rate (as defined in § 72.2 of this chapter). The maximum potential NO_X emission rate may be specific to the type of fuel combusted in the unit during the bypass (see § 75.33(c)(8)). Alternatively, for a unit with NO_X add-on emission controls, for each unit operating hour in which the bypass stack is used and the add-on NO_X emission controls are not bypassed, the owner or operator may report the maximum controlled NO_X emission rate (MCR) instead of the maximum potential NO_X emission rate provided that the add-on controls are documented to be operating properly, as described in the quality assurance/quality control program for the unit, required by section 1 in appendix B of this part. To provide the necessary documentation, the owner or operator shall record parametric data to verify the proper operation of the NO_X add-on emission controls as described in § 75.34(d). Furthermore, the owner or operator shall calculate the MCR using the procedure described in section 2.1.2.1(b) of appendix A to this part where the words ''maximum potential NO_X emission rate (MER)'' shall apply

instead of the words ''maximum controlled NO_X emission rate (MCR)'' and by using the NO_X MEC in the calculations instead of the NO_X MPC.

[58 FR 3701, Jan. 11, 1993, as amended at 60 FR 26523, May 17, 1995; 63 FR 57499, Oct. 27, 1998; 64 FR 28592, May 26, 1999; 67 FR 40424, June 12, 2002; 73 FR 4343, Jan. 24, 2008]

§ 75.18 Specific provisions for monitoring emissions from common and by-pass stacks for opacity.

(a) *Unit using common stack.*When an affected unit utilizes a common stack with other affected units or non-affected units, the owner or operator shall comply with the applicable monitoring provision in this paragraph, as determined by existing Federal, State, or local opacity regulations.

(1) Where another regulation requires the installation of a continuous opacity monitoring system upon each affected unit, the owner or operator shall install, certify, operate, and maintain a continuous opacity monitoring system meeting Performance Specification 1 in appendix B to part 60 of this chapter (referred to hereafter as a ''certified continuous opacity monitoring system'') upon each unit.

(2) Where another regulation does not require the installation of a continuous opacity monitoring system upon each affected unit, and where the affected source is not subject to any existing Federal, State, or local opacity regulations, the owner or operator shall install, certify, operate, and maintain a certified continuous opacity monitoring system upon each common stack for the combined effluent.

(b) *Unit using bypass stack.* Where any portion of the flue gases from an affected unit can be routed so as to bypass the installed continuous opacity monitoring system, the owner or operator shall install, certify, operate, and maintain a certified continuous opacity monitoring system on each bypass stack flue, duct, or stack gas stream unless either:

(1) An applicable Federal, State, or local opacity regulation or permit exempts the unit from a requirement to install a continuous opacity monitoring system in the bypass stack; or

(2) A continuous opacity monitoring system is already installed and certified at the inlet of the add-on emissions controls.

(3) The owner or operator monitors opacity using method 9 of appendix A of part 60 of this chapter whenever emissions pass through the bypass stack. Method 9 shall be used in accordance with the applicable State regulations.

[58 FR 3701, Jan. 11, 1993, as amended at 60 FR 26524, May 17, 1995; 60 FR 40296, Aug. 8, 1995; 61 FR 59158, Nov. 20, 1996]

§ 75.19 Optional SO_2, NO_X, and CO_2 emissions calculation for low mass emissions (LME) units.

(a) *Applicability and qualification.* (1) For units that meet the requirements of this paragraph (a)(1) and paragraphs (a)(2) and (b) of this section, the low mass emissions (LME) excepted methodology in paragraph (c) of this section may be used in lieu of continuous emission monitoring systems or, if applicable, in lieu of methods under appendices D, E, and G to this part, for the purpose of determining unit heat input, NO_X, SO_2, and CO_2 mass emissions, and NO_X emission rate under this part. If the owner or operator of a qualifying unit elects to use the LME methodology, it must be used for all parameters that are required to be monitored by the applicable program(s). For example, for an Acid Rain Program LME unit, the methodology must be used to estimate SO_2, NO_X, and CO_2 mass emissions, NO_X emission rate, and unit heat input.

(i) A low mass emissions unit is an affected unit that is gas-fired, or oil-fired (as defined in § 72.2 of this chapter), and for which:

(A) An initial demonstration is provided, in accordance with paragraph (a)(2) of this section, which shows that the unit emits:

(*1*) No more than 25 tons of SO_2 annually and less than 100 tons of NO_X annually, for Acid Rain Program affected units. If the unit is also subject to the provisions of subpart H of this part, no more than 50 of the allowable annual tons of NO_X may be emitted during the ozone season; or

(*2*) Less than 100 tons of NO_X annually *and* no more than 50 tons of NO_X during the ozone season, for non-Acid

Rain Program units subject to the provisions of subpart H of this part, for which the owner or operator reports emissions data on a year-round basis, in accordance with § 75.74(a) or § 75.74(b); or

(*3*) No more than 50 tons of NO_X per ozone season, for non-Acid Rain Program units subject to the provisions of subpart H of this part, for which the owner or operator reports emissions data only during the ozone season, in accordance with § 75.74(b); and

(B) An annual demonstration is provided thereafter, using one of the allowable methodologies in paragraph (c) of this section, showing that the low mass emissions unit continues to emit no more than the applicable number of tons of SO_2 and/or NO_X specified in paragraph (a)(1)(i)(A) of this section.

(C) This paragraph, (a)(1)(i)(C), applies only to a unit that is subject to an SO_2 emission limitation under the Acid Rain Program, and that combusts a gaseous fuel other than pipeline natural gas or natural gas (as defined in § 72.2 of this chapter). The owner or operator of such a unit must quantify the sulfur content and variability of the gaseous fuel by performing the demonstration described in section 2.3.6 of appendix D to this part, in order for the unit to qualify for LME unit status. If the results of that demonstration show that the gaseous fuel qualifies under paragraph (b) of section 2.3.6 to use a default SO_2 emission rate to report SO_2 mass emissions under this part, the unit is eligible for LME unit status.

(ii) Each qualifying LME unit must start using the low mass emissions excepted methodology as follows:

(A) For a unit that reports emission data on a year-round basis, begin using the methodology in the first unit operating hour in the calendar year designated in the certification application as the first year that the methodology will be used; or

(B) For a unit that is subject to Subpart H of this part and that reports only during the ozone season according to § 75.74(c), begin using the methodology in the first unit operating hour in the ozone season designated in the certification application as the first ozone season that the methodology will be used.

(C) For a new or newly-affected unit, see paragraph (b)(4) of this section for additional guidance.

(2) A unit may initially qualify as a low mass emissions unit if the designated representative submits a certification application to use the LME methodology (as described in § 75.63(a)(1)(ii) and in this paragraph, (a)(2)) and the Administrator (or permitting authority, as applicable) certifies the use of such methodology. The certification application shall be submitted no later than 45 days prior to the date on which use of the low mass emissions methodology is expected to commence, and the application must contain:

(i) A statement identifying the projected date on which the LME methodology will first be used. The projected commencement date shall be consistent with paragraphs (a)(1)(ii) and (b)(4) of this section, as applicable; and

(ii) Either:

(A) Actual SO_2 and/or NO_X mass emissions data (as applicable) for each of the three calendar years (or ozone seasons) prior to the calendar year in which the certification application is submitted demonstrating to the satisfaction of the Administrator or (if applicable) the permitting authority, that the unit emitted less than the applicable number of tons of SO_2 and/or NO_X specified in paragraph (a)(1)(i)(A) of this section. For the purposes of this paragraph, (a)(2)(ii)(A), the required actual SO_2 or NO_X mass emissions for each qualifying year or ozone season shall be determined using the SO_2, NO_X and heat input data reported to the Administrator in the electronic quarterly reports required under § 75.64 or under the Ozone Transport Commission (OTC) NO_X Budget Trading Program. Notwithstanding this requirement, in the absence of such electronic reports, an estimate of the actual emissions for each of the previous three years (or ozone seasons) shall be provided, using either the maximum rated heat input methodology described in paragraph (c)(3)(i) of this section or procedures consistent with the long term fuel flow heat input methodology described in paragraph (c)(3)(ii) of this section, in

conjunction with the appropriate SO_2 or NO_X emission rate from paragraph (c)(1)(i) of this section for SO_2, and paragraph (c)(1)(ii) or (c)(1)(iv) of this section for NO_X. Alternatively, the initial estimate of the NO_X emission rate may be based on historical emission test data that is representative of operation at normal load or historical data from a CEMS certified under part 60 of this chapter or under a state CEM program; or

(B) When the three full years (or ozone seasons) of actual SO_2 and NO_X mass emissions data (or reliable estimates thereof) described under paragraph (a)(2)(ii)(A) of this section do not exist, the designated representative may submit an application to use the low mass emissions excepted methodology based upon a combination of actual historical SO_2 and NO_X mass emissions data and projected SO_2 and NO_X mass emissions, totaling three years (or ozone seasons). Except as provided in paragraph (a)(3) of this section, actual data must be used for any years (or ozone seasons) in which such data exists and projected data should be used for any remaining future years (or ozone seasons) needed to provide emissions data for three consecutive calender years (or ozone seasons). For example, if a unit commenced operation two years ago, the designated representative may submit actual, historical data for the previous two years and one year of projected emissions for the current calendar year or, for a new unit, the designated representative may submit three years of projected emissions, beginning with the current calendar year. Any actual or projected annual emissions must demonstrate to the satisfaction of the Administrator that the unit will emit less than the applicable number of tons of SO_2 and/or NO_X specified in paragraph (a)(1)(i)(A) of this section. Projected emissions shall be calculated using either the appropriate default emission rates from paragraphs (c)(1)(i) and (c)(1)(ii) of this section (or, alternatively for NO_X, a conservative estimate of the NO_X emission rate, as described in paragraph (a)(4) of this section), in conjunction with projections of unit operating hours or fuel type and fuel usage, according to one of the allowable calculation methodologies in paragraph (c) of this section; and

(iii) A description of the methodology from paragraph (c) of this section that will be used to demonstrate ongoing compliance under paragraph (b) of this section; and

(iv) Appropriate documentation demonstrating that the unit is eligible to use projected emissions to qualify for LME status under paragraph (a)(3) of this section (if applicable).

(3) In the following circumstances, projected emissions for a future year (or years) may be used in lieu of the actual emissions data from one (or more) of the three years (or ozone seasons) preceding the year of the certification application:

(i) If the owner or operator takes an enforceable permit restriction on the number of annual or ozone season unit operating hours for the future year (or years), such that the unit will emit no more than the applicable number of tons of SO_2 and/or NO_X specified in paragraph (a)(1)(i)(A) of this section; or

(ii) If the actual emissions for one (or more) of the three years (or ozone seasons) prior to the year of the certification application is not representative of the present and expected future emissions from the unit, because the owner or operator has recently installed emission controls on the unit.

(4) When the owner or operator elects to demonstrate initial LME qualification and on-going compliance using a fuel-and-unit-specific NO_X emission rate in accordance with paragraph (c)(1)(iv) of this section, there will be instances (e.g., for a new or newly-affected unit) where it is not possible to determine that NO_X emission rate prior to submitting the certification application. In such cases, if the generic default NO_X emission rates in Table LM–2 of this section are inappropriately high for the unit, the owner or operator may use a more representative, but conservatively high estimate of the expected NO_X emission rate, for the purposes of the initial monitoring plan submittal and to calculate the unit's projected annual or ozone season emissions under paragraph (a)(2)(ii)(B) of this section. For example, the NO_X emission rate could, as described in paragraph (a)(2)(ii)(A) of this section,

be estimated using historical CEM data or historical emission test data that is representative of operation at normal load. The NO_X emission limit specified in the operating permit for the unit could also be used to estimate the NO_X emission rate (except for units equipped with SCR or SNCR), or, consistent with paragraph (c)(1)(iv)(C)(*4*) of this section, for a unit that uses SCR or SNCR to control NO_X emissions, an estimated default NO_X emission rate of 0.15 lb/mmBtu could be used. However, these estimated NO_X emission rates may not be used for reporting purposes in the time period extending from the first hour in which the LME methodology is used to the date and hour on which the fuel-and-unit-specific NO_X emission rate testing is completed. Rather, in that interval, the owner or operator shall either report the appropriate default NO_X emission rate from Table LM–2, or shall report the maximum potential NO_X emission rate, calculated in accordance with § 72.2 of this chapter and section 2.1.2.1 of appendix A to this part. Then, beginning with the first unit operating hour after completion of the tests, the appropriate default NO_X emission rate(s) obtained from the fuel-and-unit-specific testing shall be used for emissions reporting.

(b) *On-going qualification and disqualification*. (1) Once a low mass emissions unit has qualified for and has started using the low mass emissions excepted methodology, an annual demonstration is required, showing that the unit continues to emit no more than the applicable number of tons of SO_2 and/or NO_X specified in paragraph (a)(1)(i)(A) of this section. The calculation methodology used for the annual demonstration shall be the methodology described in the certification application under paragraph (a)(2)(iii) of this section.

(2) If any low mass emissions unit fails to provide the required annual demonstration under paragraph (b)(1) of this section, such that the calculated cumulative emissions for the unit exceed the applicable number of tons of SO_2 and/or NO_X specified in paragraph (a)(1)(i)(A) of this section at the end of any calendar year or ozone season, then:

(i) The low mass emissions unit shall be disqualified from using the low mass emissions excepted methodology; and

(ii) The owner or operator of the low mass emissions unit shall install and certify monitoring systems that meet the requirements of §§ 75.11, 75.12, and 75.13, and shall report SO_2 (Acid Rain Program units, only), NO_X, and CO_2 (Acid Rain Program units, only) emissions data and heat input data from such monitoring systems by December 31 of the calendar year following the year in which the unit exceeded the number of tons of SO_2 and/or NO_X specified in paragraph (a)(1)(i)(A) of this section; and

(iii) If the required monitoring systems have not been installed and certified by the applicable deadline in paragraph (b)(2)(ii) of this section, the owner or operator shall report the following values for each unit operating hour, beginning with the first operating hour after the deadline and continuing until the monitoring systems have been provisionally certified: the maximum potential hourly heat input for the unit, as defined in § 72.2 of this chapter; the SO_2 emissions, in lb/hr, calculated using the applicable default SO_2 emission rate from paragraph (c)(1)(i) of this section and the maximum potential hourly unit heat input; the CO_2 emissions, in tons/hr, calculated using the applicable default CO_2 emission rate from paragraph (c)(1)(iii) of this section and the maximum potential hourly unit heat input; and the maximum potential NO_X emission rate, as defined in § 72.2 of this chapter.

(3) If a low mass emissions unit that initially qualifies to use the low mass emissions excepted methodology under this section changes fuels, such that a fuel other than those allowed for use in the low mass emissions methodology is combusted in the unit, the unit shall be disqualified from using the low mass emissions excepted methodology as of the first hour that the new fuel is combusted in the unit. The owner or operator shall install and certify SO_2 (Acid Rain Program units, only), NO_X, and CO_2 (Acid Rain Program units, only) and flow (if necessary) monitoring systems that meet the requirements of §§ 75.11, 75.12, and 75.13 prior to a change

to such fuel, and shall report emissions data from such monitoring systems beginning with the date and hour on which the new fuel is first combusted in the unit. If the required monitoring systems are not installed and certified prior to the fuel switch, the owner or operator shall report (as applicable) the maximum potential concentration of SO_2, CO_2 and NO_X, the maximum potential NO_X emission rate, the maximum potential flowrate, the maximum potential hourly heat input and the maximum (or minimum, if appropriate) potential moisture percentage, from the date and hour of the fuel switch until the monitoring systems are certified or until probationary calibration error tests of the monitors are passed and the conditional data validation procedures in § 75.20(b)(3) begin to be used. All maximum and minimum potential values shall be specific to the new fuel and shall be determined in a manner consistent with section 2 of appendix A to this part and § 72.2 of this chapter. The owner or operator must notify the Administrator (or the permitting authority) in the case where a unit switches fuels without previously having installed and certified a SO_2, NO_X and CO_2 monitoring system meeting the requirements of §§ 75.11, 75.12, and 75.13.

(4) If a new of newly-affected unit initially qualifies to use the low mass emissions excepted methodology under this section and the owner or operator wants to use the low mass emissions methodology for the unit, he or she must:

(i) Keep the records specified in paragraph (c)(2) of this section, beginning with the date and hour of commencement of commercial operation, for a new unit subject to an Acid Rain emission limitation, and beginning with the date and hour of the commencement of operation, for a new unit subject to a NO_X mass reduction program under subpart H of this part. For newly-affected units, the records in paragraph (c)(2) of this section shall be kept as follows:

(A) For Acid Rain Program units, begin keeping the records as of the first hour of commercial operation of the unit following the date on which the unit becomes affected; or

(B) For units subject to a NO_X mass reduction program under subpart H of this part, begin keeping the records as of the first hour of unit operation following the date on which the unit becomes an affected unit;

(ii) Use these records to determine the cumulative heat input and SO_2, CO_2, and/or NO_X mass emissions in order to continue to qualify as a low mass emissions unit; and

(iii) Determine the cumulative SO_2 and/or NO_X mass emissions according to paragraph (c) of this section using the same procedures used after the certification deadline for the unit, for purposes of demonstrating eligibility to use the excepted methodology set forth in this section. For example, use the default emission rates in Tables LM–1, LM–2, and LM–3 of this section or use the fuel-and-unit-specific NO_X emission rate determined according to paragraph (c)(1)(iv) of this section. For Acid Rain Program LME units, the Administrator will not count SO_2 mass emissions calculated for the period between commencement of commercial operation and the certification deadline for the unit under § 75.4 against SO_2 allowances to be held in the unit account.

(5) A low mass emissions unit that has been disqualified from using the low mass emissions excepted methodology may subsequently submit an application to qualify again to use the low mass emissions methodology under paragraph (a)(2) of this section only if, following the non-compliant year (or ozone season), at least three full years (or ozone seasons) of actual, monitored emissions data is obtained showing that the unit emitted no more than the applicable number of tons of SO_2 and/or NO_X specified in paragraph (a)(1)(i)(A) of this section. Further, the designated representative or authorized account representative must certify in the application that the unit operation for the years or ozone seasons for which the emissions were monitored are representative of the projected future operation of the unit.

(c) *Low mass emissions excepted methodology, calculations, and values*—(1) *Determination of SO_2, NO_X, and CO_2 emission rates.*

(i) If the unit combusts only natural gas and/or fuel oil, use Table LM–1 of

this section to determine the appropriate SO_2 emission rate for use in calculating hourly SO_2 mass emissions under this section. Alternatively, for fuel oil combustion, a lower, fuel-specific SO_2 emission factor may be used in lieu of the applicable emission factor from Table LM–1, if a federally enforceable permit condition is in place that limits the sulfur content of the oil. If this alternative is chosen, the fuel-specific SO_2 emission rate in lb/mmBtu shall be calculated by multiplying the fuel sulfur content limit (weight percent sulfur) by 1.01. In addition, the owner or operator shall periodically determine the sulfur content of the oil combusted in the unit, using one of the oil sampling and analysis options described in section 2.2 of appendix D to this part, and shall keep records of these fuel sampling results in a format suitable for inspection and auditing. Alternatively, the required oil sampling and associated recordkeeping may be performed using a consensus standard (e.g., ASTM, API, etc.) that is prescribed in the unit's Federally-enforceable operating permit, in an applicable State regulation, or in another applicable Federal regulation. If the unit combusts gaseous fuel(s) other than natural gas, the owner or operator shall use the procedures in section 2.3.6 of appendix D to this part to document the total sulfur content of each such fuel and to determine the appropriate default SO2 emission rate for each such fuel.

(ii) If the unit combusts only natural gas and/or fuel oil, use either the appropriate NO_X emission factor from Table LM–2 of this section, or a fuel-and-unit-specific NO_X emission rate determined according to paragraph (c)(1)(iv) of this section, to calculate hourly NO_X mass emissions under this section. If the unit combusts a gaseous fuel other than pipeline natural gas or natural gas, the owner or operator shall determine a fuel-and-unit-specific NO_X emission rate according to paragraph (c)(1)(iv) of this section.

(iii) If the unit combusts only natural gas and/or fuel oil, use Table LM–3 of this section to determine the appropriate CO_2 emission rate for use in calculating hourly CO_2 mass emissions under this section (Acid Rain Program units, only). If the unit combusts a gaseous fuel other than pipeline natural gas or natural gas, the owner or operator shall determine a fuel-and-unit-specific CO_2 emission rate for the fuel, as follows:

(A) Derive a carbon-based F-factor for the fuel, using fuel sampling and analysis, as described in section 3.3.6 of appendix F to this part; and

(B) Use Equation G–4 in appendix G to this part to derive the default CO_2 emission rate. Rearrange the equation, solving it for the ratio of W_{CO2}/H (this ratio will yield an emission rate, in units of tons/mmBtu). Then, substitute the carbon-based F-factor determined in paragraph (c)(1)(iii)(A) of this section into the rearranged equation to determine the default CO_2 emission rate for the unit.

(iv) In lieu of using the default NO_X emission rate from Table LM–2 of this section, the owner or operator may, for each fuel combusted by a low mass emissions unit, determine a fuel-and-unit-specific NO_X emission rate for the purpose of calculating NO_X mass emissions under this section. This option may be used by any unit which qualifies to use the low mass emission excepted methodology under paragraph (a) of this section, and also by groups of units which combust fuel from a common source of supply and which use the long term fuel flow methodology under paragraph (c)(3)(ii) of this section to determine heat input. The testing must be completed in a timely manner, such that the test results are reported electronically no later than the end of the calendar year or ozone season in which the LME methodology is first used. If this option is chosen, the following procedures shall be used.

(A) Except as otherwise provided in paragraphs (c)(1)(iv)(F), (c)(1)(iv)(G), and (c)(1)(iv)(I) of this section, determine a fuel-and-unit-specific NO_X emission rate by conducting a four load NO_X emission rate test procedure as specified in section 2.1 of appendix E to this part, for each type of fuel combusted in the unit. For a group of units sharing a common fuel supply, the appendix E testing must be performed on each individual unit in the group, unless some or all of the units in the group belong to an identical group of

units, as defined in paragraph (c)(1)(iv)(B) of this section, in which case, representative testing may be conducted on units in the identical group of units, as described in paragraph (c)(1)(iv)(B) of this section. For the purposes of this section, make the following modifications to the appendix E test procedures:

(*1*) Do not measure the heat input as required under 2.1.3 of appendix E to this part.

(*2*) Do not plot the test results as specified under 2.1.6 of appendix E to this part.

(*3*) Do not correct the NO_X concentration to 15% O_2.

(*4*) If the testing is performed on an uncontrolled diffusion flame turbine, a correction to the observed average NO_X concentration from each run of the test must be applied using the following Equation LM–1a.

$$NO_{X_{corr}} = NO_{X_{obs}} \left(\frac{P_r}{P_o}\right)^{0.5} e^{19(H_o - H_r)} \left(\frac{T_r}{T_a}\right)^{1.53} \qquad \text{(Eq. LM-1a)}$$

Where:

$NO_{X_{corr}}$ = Corrected NO_X concentration (ppm).

$NO_{X_{obs}}$ = Average measured NO_X concentration for each run of the test (ppm).

P_r = Average annual atmospheric pressure (or average ozone season atmospheric pressure for a Subpart H unit that reports data only during the ozone season) at the nearest weather station (e.g., a standardized NOAA weather station located at the airport) for the year (or ozone season) prior to the year of the test (mm Hg).

P_o = Observed atmospheric pressure during the test run (mm Hg).

H_r = Average annual atmospheric humidity ratio (or average ozone season humidity ratio for a Subpart H unit that reports data only during the ozone season) at the nearest weather station, for the year (or ozone season) prior to the year of the test (g H_2O/g air).

H_o = Observed humidity ratio during the test run (g H_2O/g air).

T_r = Average annual atmospheric temperature (or average ozone season atmospheric temperature for a Subpart H unit that reports data only during the ozone season) at the nearest weather station, for the year (or ozone season) prior to the year of the test (° K).

T_a = Observed atmospheric temperature during the test run (° K).

(B) Representative appendix E testing may be done on low mass emission units in a group of identical units. All of the units in a group of identical units must combust the same fuel type but do not have to share a common fuel supply.

(*1*) To be considered identical, all low mass emission units must be of the same size (based on maximum rated hourly heat input), manufacturer and model, and must have the same history of modifications (e.g., have the same controls installed, the same types of burners and have undergone major overhauls at the same frequency (based on hours of operation)). Also, under similar operating conditions, the stack or turbine outlet temperature of each unit must be within ±50 degrees Fahrenheit of the average stack or turbine outlet temperature for all of the units.

(*2*) If all of the low mass emission units in the group qualify as identical, then representative testing of the units in the group may be performed according to Table LM–4 of this section.

(*3*) [Reserved]

(*4*) If the acceptance criteria in paragraph (c)(1)(iv)(B)(*1*) of this section are not met then the group of low mass emission units is not considered an identical group of units and individual appendix E testing of each unit is required.

(*5*) Fuel and unit specific NO_X emission rates determined according to paragraphs (c)(1)(iv)(F) and (c)(1)(iv)(G) of this section may be used in lieu of appendix E testing for one or more low mass emission units in a group of identical units.

(C) Based on the results of the part 75 appendix E testing, determine the fuel-and-unit-specific NO_X emission rate as follows:

(*1*) Except for LME units that use selective catalytic reduction (SCR) or selective non-catalytic reduction (SNCR)

to control NO_X emissions, the highest three-run average NO_X emission rate obtained at any load in the appendix E test for a particular type of fuel shall be the fuel-and-unit-specific NO_X emission rate, for that type of fuel.

(*2*) [Reserved]

(*3*) For a group of identical low mass emissions units (except for units that use SCR or SNCR to control NO_X emissions), the fuel-and-unit-specific NO_X emission rate for all units in the group, for a particular type of fuel, shall be the highest three-run average NO_X emission rate obtained at any tested load from any unit tested in the group, for that type of fuel.

(*4*) Except as provided in paragraphs (c)(1)(iv)(C)(*7*) and (c)(1)(iv)(C)(*8*) of this section, for an individual low mass emissions unit which uses SCR or SNCR to control NO_X emissions, the fuel-and-unit-specific NO_X emission rate for each type of fuel combusted in the unit shall be the higher of:

(*i*) The highest three-run average emission rate from any load of the appendix E test for that type of fuel; or

(*ii*) 0.15 lb/mmBtu.

(*5*) [Reserved]

(*6*) Except as provided in paragraphs (c)(1)(iv)(C)(*7*) and (c)(1)(iv)(C)(*8*) of this section, for a group of identical low mass emissions units that are all equipped with SCR or SNCR to control NO_X emissions, the fuel-and-unit-specific NO_X emission rate for each unit in the group of units, for a particular type of fuel, shall be the higher of:

(*i*) The highest three-run average NO_X emission rate at any load from all appendix E tests of all tested units in the group, for that type of fuel; or

(*ii*) 0.15 lb/mmBtu.

(*7*) Notwithstanding the requirements of paragraphs (c)(1)(iv)(C)(*4*) and (c)(1)(iv)(C)(*6*) of this section, for a unit (or group of identical units) equipped with SCR (or SNCR) *and* water (or steam) injection to control NO_X emissions:

(*i*) If the appendix E testing is performed when the water (or steam) injection is in use *and* either upstream of the SCR or SNCR or during a time period when the SCR or SNCR is out of service; then

(*ii*) The highest three-run average emission rate from the appendix E testing may be used as the fuel-and-unit-specific NO_X emission rate for the unit (or, if applicable, for each unit in the group), for each unit operating hour in which the water-to-fuel ratio is within the acceptable range established during the appendix E testing.

(*8*) Notwithstanding the requirements of paragraphs (c)(1)(iv)(C)(*4*) and (c)(1)(iv)(C)(*6*) of this section, for a unit (or group of identical units) equipped with SCR (or SNCR) *and* uses dry low-NO_X technology to control NO_X emissions:

(*i*) If the appendix E testing is performed during a time period when the dry low-NO_X controls are in use, but the SCR or SNCR is out of service; then

(*ii*) The highest three-run average emission rate from the appendix E testing may be used as the fuel-and-unit-specific NO_X emission rate for the unit (or, if applicable, for each unit in the group), for each unit operating hour in which the parametric data described in paragraph (c)(1)(iv)(H)(*2*) of this section demonstrate that the dry low-NO_X controls are operating in the premixed or low-NO_X mode.

(*9*) For an individual combustion turbine (or a group of identical turbines) that operate principally at base load (or at a set point temperature), but are capable of operating at a higher peak load (or higher internal operating temperature), the fuel-and-unit-specific NO_X emission rate for the unit (or for each unit in the group) shall be as follows:

(*i*) If the testing is done only at base load, use the three-run average NO_X emission rate for base load operating hours and 1.15 times that emission rate for peak load operating hours; or

(*ii*) If the testing is done at both base load and peak load, use the three-run average NO_X emission rate from the base load testing for base load operating hours and the three-run average NO_X emission rate from the peak load testing for peak load operating hours.

(D) For each low mass emissions unit, or group of identical units for which the provisions of paragraph (c)(1)(iv) of this section are used to account for NO_X emission rate, the owner or operator shall determine a new fuel-and-unit-specific NO_X emission rate

every five years (20 calendar quarters), unless changes in the fuel supply, physical changes to the unit, changes in the manner of unit operation, or changes to the emission controls occur which may cause a significant increase in the unit's actual NO_X emission rate. If such changes occur, the fuel-and-unit-specific NO_X emission rate(s) shall be re-determined according to paragraph (c)(1)(iv) of this section. Testing shall be done at the number of loads specified in paragraph (c)(1)(iv)(A) or (c)(1)(iv)(I) of this section, as applicable. If a low mass emissions unit belongs to a group of identical units and it is required to retest to determine a new fuel-and-unit-specific NO_X emission rate because of changes in the fuel supply, physical changes to the unit, changes in the manner of unit operation or changes to the emission controls occur which may cause a significant increase in the unit's actual NO_X emission rate, any other unit in that group of identical units is not required to re-determine the fuel-and-unit-specific NO_X emission rate unless such unit also undergoes changes in the fuel supply, physical changes to the unit, changes in the manner of unit operation or changes to the emission controls occur which may cause a significant increase in the unit's actual NO_X emission rates.

(E) Each low mass emissions unit or each low mass emissions unit in a group of identical units for which a fuel-and-unit-specific NO_X emission rate(s) are determined shall meet the quality assurance and quality control provisions of paragraph (e) of this section.

(F) Low mass emission units may use the results of appendix E testing, if such test results are available from a test conducted no more than five years prior to the time of initial certification, to determine the appropriate fuel-and-unit-specific NO_X emission rate(s). However, fuel-and-unit-specific NO_X emission rates from historical testing may not be used longer than five years after the appendix E testing was conducted.

(G) Low mass emissions units for which at least 3 years of quality-assured NO_X emission rate data from a NO_X-diluent CEMS that meets the quality assurance requirements of either: this part, or appendix F to part 60 of this chapter, or a comparable State CEM program, and corresponding fuel usage data are available may determine fuel-and-unit-specific NO_X emission rates from the actual data using the following procedure. Separate the actual NO_X emission rate data into groups, according to the type of fuel combusted. Discard data from periods when multiple fuels were combusted. Each fuel-specific data set must contain at least 168 hours of data and must represent all normal operating ranges of the unit when combusting the fuel. Sort the data in each fuel-specific data set in ascending order according to NO_X emission rate. Determine the 95th percentile NO_X emission rate for each data set as defined in § 72.2 of this chapter. Use the 95th percentile value for each data set as the fuel-and-unit-specific NO_X emission rate, except that for a unit that uses SCR or SNCR for NO_X emission control, if the 95th percentile value is less than 0.15 lb/mmBtu, a value of 0.15 lb/mmBtu shall be used as the fuel-and-unit-specific NO_X emission rate.

(H) For low mass emission units with add-on NO_X emission controls, and for units that use dry low-NO_X technology, the owner or operator shall, during every hour of unit operation during the test period, monitor and record parameters, as required under paragraph (e)(5) of this section, which indicate that the NO_X emission controls are operating properly. After the test period, these same parameters shall be monitored and recorded and kept for all operating hours in order to determine whether the NO_X controls are operating properly and to allow the determination of the correct NO_X emission rate as required under paragraph (c)(1)(iv) of this section.

(*I*) For low mass emission units with steam or water injection, the steam-to-fuel or water-to-fuel ratio used during the testing must be documented. The water-to-fuel or steam-to-fuel ratio must be maintained during unit operations for a unit to use the fuel and unit specific NO_X emission rate determined during the test. Owners or operators must include in the monitoring plan the acceptable range of the water-

to-fuel or steam-to-fuel ratio, which will be used to indicate hourly, proper operation of the NO_X controls for each unit. The water-to-fuel or steam-to-fuel ratio shall be monitored and recorded during each hour of unit operation. If the water-to-fuel or steam-to-fuel ratio is not within the acceptable range in a given hour the fuel and unit specific NO_X emission rate may not be used for that hour, and the appropriate default NO_X emission rate from Table LM–2 shall be reported instead.

(*2*) For a low mass emissions unit that uses dry low-NO_X premix technology to control NO_X emissions, proper operation of the emission controls means that the unit is in the low-NO_X or premixed combustion mode, and fired with natural gas. Evidence of operation in the low-NO_X or premixed mode shall be provided by monitoring the appropriate turbine operating parameters. These parameters may include percentage of full load, turbine exhaust temperature, combustion reference temperature, compressor discharge pressure, fuel and air valve positions, dynamic pressure pulsations, internal guide vane (IGV) position, and flame detection or flame scanner condition. The acceptable values and ranges for all parameters monitored shall be specified in the monitoring plan for the unit, and the parameters shall be monitored during each subsequent operating hour. If one or more of these parameters is not within the acceptable range or at an acceptable value in a given operating hour, the fuel-and-unit-specific NO_X emission rate may not be used for that hour, and the appropriate default NO_X emission rate from Table LM–2 shall be reported instead. When the unit is fired with oil the appropriate default value from Table LM–2 shall be reported.

(*3*) For low mass emission units with other types of add-on NO_X controls, appropriate parameters and the acceptable range of the parameters which indicate hourly proper operation of the NO_X controls must be specified in the monitoring plan. These parameters shall be monitored during each subsequent operating hour. If any of these parameters are not within the acceptable range in a given operating hour, the fuel and unit specific NO_X emission rates may not be used in that hour, and the appropriate default NO_X emission rate from Table LM–2 shall be reported instead.

(I) Notwithstanding the requirements in paragraph (c)(1)(iv)(A) of this section, the appendix E testing to determine (or re-determine) the fuel-specific, unit-specific NO_X emission rate for a unit (or for each unit in a group of identical units) may be performed at fewer than four loads, under the following circumstances:

(*1*) Testing may be done at one load level if the data analysis described in paragraph (c)(1)(iv)(J) of this section is performed and the results show that the unit has operated (or all units in the group of identical units have operated) at a single load level for at least 85.0 percent of all operating hours in the previous three years (12 calendar quarters) prior to the calendar quarter of the appendix E testing. For combustion turbines that are operated to produce approximately constant output (in MW) but which use internal operating and exhaust temperatures and not the actual output in MW to control the operation of the turbine, the internal operating temperature set point may be used as a surrogate for load in demonstrating that the unit qualifies for single-load testing. If the data analysis shows that the unit does not qualify for single-load testing, testing may be done at two (or three) load levels if the unit has operated (or if all units in the group of identical units have operated) cumulatively at two (or three) load levels for at least 85.0 percent of all operating hours in the previous three years; or

(*2*) If a multiple-load appendix E test was initially performed for a unit (or group of identical units) to determine the fuel-and-unit specific NO_X emission rate, then the periodic retests required under paragraph (c)(1)(iv)(D) of this section may be single-load tests, performed at the load level for which the highest average NO_X emission rate was obtained in the initial test.

(*3*) The initial appendix E testing may be performed at a single load, between 75 and 100 percent of the maximum sustainable load defined in the monitoring plan for the unit, if the average annual capacity factor of the

LME unit, when calculated according to the definition of ''capacity factor'' in § 72.2 of this chapter, is 2.5 percent or less for the three calendar years immediately preceding the year of the testing, and that the annual capacity factor does not exceed 4.0 percent in any of those three years. Similarly, for a LME unit that reports emissions data on an ozone season-only basis, the initial appendix E testing may be performed at a single load between 75 and 100 percent of the maximum sustainable load if the 2.5 and 4.0 percent capacity factor requirements are met for the three ozone seasons immediately preceding the date of the emission testing (see § 75.74(c)(11)). For a group of identical LME units, any unit(s) in the group that meet the 2.5 and 4.0 percent capacity factor requirements may perform the initial appendix E testing at a single load between 75 and 100 percent of the maximum sustainable load.

(*4*) The retest of any LME unit may be performed at a single load between 75 and 100 percent of the maximum sustainable load if, for the three calendar years immediately preceding the year of the retest (or, if applicable, the three ozone seasons immediately preceding the date of the retest), the applicable capacity factor requirements described in paragraph (c)(1)(iv)(I)(*3*) of this section are met.

(*5*) Alternatively, for combustion turbines, the single-load testing described in paragraphs (c)(1)(iv)(I)(*3*) and (c)(1)(iv)(I)(*4*) of this section may be performed at the highest attainable load level corresponding to the season of the year in which the testing is conducted.

(*6*) In all cases where the alternative single-load testing option described in paragraphs (c)(1)(iv)(I)(*3*) through (c)(1)(iv)(I)(*5*) of this section is used, the owner or operator shall keep records documenting that the required capacity factor requirements were met.

(J) To determine whether a unit qualifies for testing at fewer than four loads under paragraph (c)(1)(iv)(I) of this section, follow the procedures in paragraph (c)(1)(iv)(J)(*1*) or (c)(1)(iv)(J)(*2*) of this section, as applicable.

(*1*) Determine the range of operation of the unit, according to section 6.5.2.1 of appendix A to this part. Divide the range of operation into four equal load bands. For example, if the range of operation extends from 20 MW to 100 MW, the four equal load bands would be: band #1: from 20 MW to 40 MW; band #2: from 41 MW to 60 MW; band #3: from 61 MW to 80 MW; and band #4: from 81 to 100 MW. Then, perform a historical load analysis for all unit operating hours in the 12 calendar quarters preceding the quarter of the test. Alternatively, for sources that report emissions data only during the ozone season, the historical load analysis may be based on unit operation in the previous three ozone seasons, rather than unit operation in the previous 12 calendar quarters. Determine the percentage of the data that fall into each load band. For a unit that is not part of a group of identical units, if 85.0% or more of the data fall into one load band, single-load testing may be performed at any point within that load band. For a group of identical units, if each unit in the group meets the 85.0% criterion, then representative single-load testing within the load band may be performed. If the 85.0% criterion cannot be met to qualify for single-load testing but this criterion can be met cumulatively for two (or three) load levels, then testing may be performed at two (or three) loads instead of four.

(*2*) For a combustion turbine that uses exhaust temperature and not the actual output in megawatts to control the operation of the turbine (or for a group of identical units of this type), the owner or operator must document that the unit (or each unit in the group) has operated within ±10% of the set point temperature for 85.0% of the operating hours in the previous 12 calendar quarters to qualify for single-load testing. Alternatively, for sources that report emissions data only during the ozone season, the historical set point temperature analysis may be based on unit operation in the previous three ozone seasons, rather than unit operation in the previous 12 calendar quarters. When the set point temperature is used rather than unit load to justify single-load testing, the designated representative shall certify in the monitoring plan for the unit that

this is the normal manner of unit operation and shall document the setpoint temperature.

(2) *Records of operating time, fuel usage, unit output and NO_X emission control operating status.* The owner or operator shall keep the following records on-site, for three years, in a form suitable for inspection, except that for unmanned facilities, the records may be kept at a central location, rather than on-site:

(i) For each low mass emissions unit, the owner or operator shall keep hourly records which indicate whether or not the unit operated during each clock hour of each calendar year. The owner or operator may report partial operating hours or may assume that for each hour the unit operated the operating time is a whole hour. Units using partial operating hours and the maximum rated hourly heat input to calculate heat input for each hour must report partial operating hours.

(ii) For each low mass emissions unit, the owner or operator shall keep hourly records indicating the type(s) of fuel(s) combusted in the unit during each hour of unit operation.

(iii) For each low mass emissions unit using the long term fuel flow methodology under paragraph (c)(3)(ii) of this section to determine hourly heat input, the owner or operator shall keep hourly records of unit load (in megawatts or thousands of pounds of steam per hour), for the purpose of apportioning heat input to the individual unit operating hours.

(iv) For each low mass emissions unit with add-on NO_X emission controls of any kind and each unit that uses dry low-NO_X technology, the owner or operator shall keep hourly records of the hourly value of the parameter(s) specified in (c)(1)(iv)(H) of this section used to indicate proper operation of the unit's NO_X controls.

(3) *Heat input.* Hourly, quarterly and annual heat input for a low mass emissions unit shall be determined using either the maximum rated hourly heat input method under paragraph (c)(3)(i) of this section or the long term fuel flow method under paragraph (c)(3)(ii) of this section.

(i) *Maximum rated hourly heat input method.* (A) For the purposes of the mass emission calculation methodology of paragraph (c)(3) of this section, HI_{hr}, the hourly heat input (mmBtu) to a low mass emissions unit shall be deemed to equal the maximum rated hourly heat input, as defined in § 72.2 of this chapter, multiplied by the operating time of the unit for each hour. The owner or operator may choose to record and report partial operating hours or may assume that a unit operated for a whole hour for each hour the unit operated. However, the owner or operator of a unit may petition the Administrator under § 75.66 for a lower value for maximum rated hourly heat input than that defined in § 72.2 of this chapter. The Administrator may approve such lower value if the owner or operator demonstrates that either the maximum hourly heat input specified by the manufacturer or the highest observed hourly heat input, or both, are not representative, and such a lower value is representative, of the unit's current capabilities because modifications have been made to the unit, limiting its capacity permanently.

(B) The quarterly heat input, HI_{qtr}, in mmBtu, shall be determined using Equation LM–1:

$$HI_{qtr} = \sum_{1}^{n} HI_{hr} \qquad \text{(Eq. LM-1)}$$

Where:

n = Number of unit operating hours in the quarter.

HI_{hr} = Hourly heat input under paragraph (c)(3)(i)(A) of this section (mmBtu).

(C) The year-to-date cumulative heat input (mmBtu) shall be the sum of the quarterly heat input values for all of the calendar quarters in the year to date.

(D) For a unit subject to the provisions of subpart H of this part, which is not required to report emission data on a year-round basis and elects to report only during the ozone season, the quarterly heat input for the second calendar quarter of the year shall, for compliance purposes, include only the heat input for the months of May and June, and the cumulative ozone season heat input shall be the sum of the heat input values for May, June and the third calendar quarter of the year.

(ii) *Long term fuel flow heat input method*. The owner or operator may, for the purpose of demonstrating that a low mass emissions unit or group of low mass emission units sharing a common fuel supply meets the requirements of this section, use records of long-term fuel flow, to calculate hourly heat input to a low mass emissions unit.

(A) This option may be used for a group of low mass emission units only if:

(*1*) The low mass emission units combust fuel from a common source of supply; and

(*2*) Records are kept of the total amount of fuel combusted by the group of low mass emission units and the hourly output (in megawatts or pounds of steam) from each unit in the group; and

(*3*) All of the units in the group are low mass emission units.

(B) For each fuel used during the quarter, the volume in standard cubic feet (for gas) or gallons (for oil) may be determined using any of the following methods;

(*1*) Fuel billing records (for low mass emission units, or groups of low mass emission units, which purchase fuel from non-affiliated sources);

(*2*) American Petroleum Institute (API) Manual of Petroleum Measurement Standards, Chapter 3-Tank Gauging, Section 1A, Standard Practice for the Manual Gauging of Petroleum and Petroleum Products, Second Edition, August 2005; Section 1B-Standard Practice for Level Measurement of Liquid Hydrocarbons in Stationary Tanks by Automatic Tank Gauging, Second Edition June 2001; Section 2-Standard Practice for Gauging Petroleum and Petroleum Products in Tank Cars, First Edition, August 1995 (Reaffirmed March 2006); Section 3-Standard Practice for Level Measurement of Liquid Hydrocarbons in Stationary Pressurized Storage Tanks by Automatic Tank Gauging, First Edition June 1996 (Reaffirmed, March 2001); Section 4-Standard Practice for Level Measurement of Liquid Hydrocarbons on Marine Vessels by Automatic Tank Gauging, First Edition April 1995 (Reaffirmed, September 2000); and Section 5-Standard Practice for Level Measurement of Light Hydrocarbon Liquids Onboard Marine Vessels by Automatic Tank Gauging, First Edition March 1997 (Reaffirmed, March 2003); for § 75.19; Shop Testing of Automatic Liquid Level Gages, Bulletin 2509 B, December 1961 (Reaffirmed August 1987, October 1992) (all incorporated by reference under § 75.6 of this part); or

(*3*) A fuel flow meter certified and maintained according to appendix D to this part.

(C) Except as provided in paragraph (c)(3)(ii)(C)(*3*) of this section, for each fuel combusted during a quarter, the gross calorific value of the fuel shall be determined by either:

(*1*) Using the applicable procedures for gas and oil analysis in sections 2.2 and 2.3 of appendix D to this part. If this option is chosen the highest gross calorific value recorded during the previous calendar year shall be used (or, for a new or newly-affected unit, if there are no sample results from the previous year, use the highest GCV from the samples taken in the current year); or

(*2*) Using the appropriate default gross calorific value listed in Table LM–5 of this section.

(*3*) For gaseous fuels other than pipeline natural gas or natural gas, the GCV sampling frequency shall be daily unless the results of a demonstration under section 2.3.5 of appendix D to this part show that the fuel has a low GCV variability and qualifies for monthly sampling. If daily GCV sampling is required, use the highest GCV obtained in the calendar quarter as GCV_{max} in Equation LM–3, of this section.

(D) If Eq. LM–2 is used for heat input determination, the specific gravity of each type of fuel oil combusted during the quarter shall be determined either by:

(*1*) Using the procedures in section 2.2.6 of appendix D to this part. If this option is chosen, use the highest specific gravity value recorded during the previous calendar year (or, for a new or newly-affected unit, if there are no sample results from the previous year, use the highest specific gravity from the samples taken in the current year); or

(*2*) Using the appropriate default specific gravity value in Table LM–6 of this section.

(E) The quarterly heat input from each type of fuel combusted during the quarter by a low mass emissions unit or group of low mass emissions units sharing a common fuel supply shall be determined using either Equation LM–2 or Equation LM–3 for oil (as applicable to the method used to quantify oil usage) and Equation LM–3 for gaseous fuels. For a unit subject to the provisions of subpart H of this part, which is not required to report emission data on a year-round basis and elects to report only during the ozone season, the quarterly heat input for the second calendar quarter of the year shall include only the heat input for the months of May and June.

$$HI_{fuel\text{-}qtr} = M_{qtr} \frac{GCV_{max}}{10^6} \qquad \text{Eq. LM-2 (for fuel oil)}$$

Where:

$HI_{fuel\text{-}qtr}$ = Quarterly total heat input from oil (mmBtu).

M_{qtr} = Mass of oil consumed during the quarter, determined as the product of the volume of oil under paragraph (c)(3)(ii)(B) of this section and the specific gravity under paragraph (c)(3)(ii)(D) of this section (lb).

GCV_{max} = Gross calorific value of oil, as determined under paragraph (c)(3)(ii)(C) of this section (Btu/lb)

10^6 = Conversion of Btu to mmBtu.

$$HI_{fuel\text{-}qtr} = Q_{qtr} \frac{GCV_{max}}{10^6} \qquad \text{Eq. LM-3 (for gaseous fuel or fuel oil)}$$

Where:

$HI_{fuel\text{-}qtr}$ = Quarterly heat input from gaseous fuel or fuel oil (mmBtu).

Q_{qtr} = Volume of gaseous fuel or fuel oil combusted during the quarter, as determined under paragraph (c)(3)(ii)(B) of this section standard cubic feet (scf) or (gal), as applicable.

GCV_{max} = Gross calorific value of the gaseous fuel or fuel oil combusted during the quarter, as determined under paragraph (c)(3)(ii)(C) of this section (Btu/scf) or (Btu/gal), as applicable.

10^6 = Conversion of Btu to mmBtu.

(F) Use Eq. LM–4 to calculate $HI_{qtr\text{-}total}$, the quarterly heat input (mmBtu) for all fuels. $HI_{qtr\text{-}total}$ shall be the sum of the $HI_{fuel\text{-}qtr}$ values determined using Equations LM–2 and LM–3.

$$HI_{qtr\text{-}total} = \sum_{all\text{-}fuels} HI_{fuel\text{-}qtr} \qquad \text{(Eq. LM-4)}$$

(G) The year-to-date cumulative heat input (mmBtu) for all fuels shall be the sum of all quarterly total heat input ($HI_{qtr\text{-}total}$) values for all calendar quarters in the year to date. For a unit subject to the provisions of subpart H of this part, which is not required to report emission data on a year-round basis and elects to report only during the ozone season, the cumulative ozone season heat input shall be the sum of the quarterly heat input values for the second and third calendar quarters of the year.

(H) For each low mass emissions unit or each low mass emissions unit in a group of identical units, the owner or operator shall determine the cumulative quarterly unit load in megawatt hours or thousands of pounds of steam. The quarterly cumulative unit load shall be the sum of the hourly unit load values recorded under paragraph (c)(2) of this section and shall be determined using Equations LM–5 or LM–6. For a unit subject to the provisions of subpart H of this part, which is not required to report emission data on a year-round basis and elects to report only during the ozone season, the quarterly cumulative load for the second calendar quarter of the year shall include only the unit loads for the months of May and June.

$$MW_{qtr} = \sum_{all-hours} MW \qquad \text{Eq. LM-5 (for MW output)}$$

$$ST_{qtr} = \sum_{all-hours} ST \qquad \text{Eq. LM-6 (for steam output)}$$

Where:

MW_{qtr} = Sum of all unit operating loads recorded during the quarter by the unit (MWh).

$ST_{fuel-qtr}$ = Sum of all hourly steam loads recorded during the quarter by the unit (klb of steam/hr).

MW = Unit operating load for a particular unit operating hour (MWh).

ST = Unit steam load for a particular unit operating hour (klb of steam).

(I) For a low mass emissions unit that is not included in a group of low mass emission units sharing a common fuel supply, apportion the total heat input for the quarter, $HI_{qtr-total}$ to each hour of unit operation using either Equation LM–7 or LM–8:

$$HI_{hr} = HI_{qtr-total} \frac{MW_{hr}}{MW_{qtr}}$$

(Eq LM–7 for MW output)

$$HI_{hr} = HI_{qtr-total} \frac{ST_{hr}}{ST_{qtr}}$$

(Eq LM–8 for steam output)

Where:

HI_{hr} = Hourly heat input to the unit (mmBtu).

MW_{hr} = Hourly operating load for the unit (MW).

ST_{hr} = Hourly steam load for the unit (klb of steam/hr).

(J) For each low mass emissions unit that is included in a group of units sharing a common fuel supply, apportion the total heat input for the quarter, $HI_{qtr-total}$ to each hour of operation using either Equation LM–7a or LM–8a:

$$HI_{hr} = HI_{qtr-total} \frac{MW_{hr}}{\sum_{all-units} MW_{qtr}}$$

(Eq LM–7a for MW output)

$$HI_{hr} = HI_{qtr-total} \frac{ST_{hr}}{\sum_{all-units} ST_{qtr}}$$

(Eq LM–8a for steam output)

Where:

HI_{hr} = Hourly heat input to the individual unit (mmBtu).

MW_{hr} = Hourly operating load for the individual unit (MW).

ST_{hr} = Hourly steam load for the individual unit (klb of steam/hr).

ΣMW^{qtr} = Sum of the quarterly operating *all-units* loads (from Eq. LM–5) for all units in the group (MW).

ΣST^{qtr} = Sum of the quarterly steam *all-units* loads (from Eq. LM–6) for all units in the group (klb of steam/hr)

(4) *Calculation of SO_2, NO_X and CO_2 mass emissions.* The owner or operator shall, for the purpose of demonstrating that a low mass emissions unit meets the requirements of this section, calculate SO_2, NO_X and CO_2 mass emissions in accordance with the following.

(i) *SO_2 mass emissions.* (A) The hourly SO_2 mass emissions (lbs) for a low mass emissions unit (Acid Rain Program units, only) shall be determined using Equation LM–9 and the appropriate fuel-based SO_2 emission factor for the fuels combusted in that hour. If more than one fuel is combusted in the hour, use the highest emission factor for all of the fuels combusted in the hour. If records are missing as to which fuel was combusted in the hour, use the highest emission factor for all of the fuels capable of being combusted in the unit.

$$W_{SO2} = EF_{SO2} \times HI_{hr} \qquad \text{(Eq. LM–9)}$$

Where:

W_{SO2} = Hourly SO_2 mass emissions (lbs.)

EF_{SO2} = Either the SO_2 emission factor from Table LM–1 of this section or the fuel-and-unit-specific SO_2 emission rate from paragraph (c)(1)(i) of this section (lb/mmBtu).

HI_{hr} = Either the maximum rated hourly heat input under paragraph (c)(3)(i)(A) of this section or the hourly heat input under

paragraph (c)(3)(ii) of this section (mmBtu).

(B) The quarterly SO_2 mass emissions (tons) for the low mass emissions unit shall be the sum of all the hourly SO_2 mass emissions in the quarter, as determined under paragraph (c)(4)(i)(A) of this section, divided by 2000 lb/ton.

(C) The year-to-date cumulative SO_2 mass emissions (tons) for the low mass emissions unit shall be the sum of the quarterly SO_2 mass emissions, as determined under paragraph (c)(4)(i)(B) of this section, for all of the calendar quarters in the year to date.

(ii)(A) The hourly NO_X mass emissions for the low mass emissions unit (lbs) shall be determined using Equation LM–10. If more than one fuel is combusted in the hour, use the highest emission rate for all of the fuels combusted in the hour. If records are missing as to which fuel was combusted in the hour, use the highest emission factor for all of the fuels capable of being combusted in the unit. For low mass emission units with NO_X emission controls of any kind and for which a fuel-and-unit-specific NO_X emission rate is determined under paragraph (c)(1)(iv) of this section, for any hour in which the parameters under paragraph (c)(1)(iv)(A) of this section do not show that the NO_X emission controls are operating properly, use the NO_X emission rate from Table LM–2 of this section for the fuel combusted during the hour with the highest NO_X emission rate.

$$W_{NOX} = EF_{NOX} \times HI_{hr} \qquad \text{(Eq. LM–10)}$$

Where:

W_{NOX} = Hourly NO_X mass emissions (lbs).

EF_{NOX} = Either the NO_X emission factor from Table LM–2 of this section or the fuel- and unit-specific NO_X emission rate determined under paragraph (c)(1)(iv) of this section (lb/mmBtu).

HI_{hr} = Either the maximum rated hourly heat input from paragraph (c)(3)(i)(A) of this section or the hourly heat input as determined under paragraph (c)(3)(ii) of this section (mmBtu).

(B) The quarterly NO_X mass emissions (tons) for the low mass emissions unit shall be the sum of all of the hourly NO_X mass emissions in the quarter, as determined under paragraph (c)(4)(ii)(A) of this section, divided by 2000 lb/ton.

(C) The year-to-date cumulative NO_X mass emissions (tons) for the low mass emissions unit shall be the sum of the quarterly NO_X mass emissions, as determined under paragraph (c)(4)(ii)(B) of this section, for all of the calendar quarters in the year to date. For a unit subject to the provisions of subpart H of this part, which is not required to report emission data on a year-round basis and elects to report only during the ozone season, the ozone season NO_X mass emissions for the unit shall be the sum of the quarterly NO_X mass emissions, as determined under paragraph (c)(4)(ii)(B) of this section, for the second and third calendar quarters of the year, and the second quarter report shall include emissions data only for May and June.

(D) The quarterly and cumulative NO_X emission rate in lb/mmBtu (if required by the applicable program(s)) shall be determined as follows. Calculate the quarterly NO_X emission rate by taking the arithmetic average of all of the hourly EF_{NO_X} values. Calculate the cumulative (year-to-date) NO_X emission rate by taking the arithmetic average of the quarterly NO_X emission rates.

(iii) *CO_2 Mass Emissions.* (A) The hourly CO_2 mass emissions (tons) for the affected low mass emissions unit (Acid Rain Program units, only) shall be determined using Equation LM–11 and the appropriate fuel-based CO_2 emission factor from Table LM–3 of this section for the fuel being combusted in that hour. If more than one fuel is combusted in the hour, use the highest emission factor for all of the fuels combusted in the hour. If records are missing as to which fuel was combusted in the hour, use the highest emission factor for all of the fuels capable of being combusted in the unit.

$$WCO_2 = EFCO_2 \times HI_{hr} \qquad \text{(Eq. LM–11)}$$

Where:

WCO_2 = Hourly CO_2 mass emissions (tons).

EF_{CO2} = Either the fuel-based CO_2 emission factor from Table LM–3 of this section or the fuel-and-unit-specific CO_2 emission rate from paragraph (c)(1)(iii) of this section (tons/mmBtu).

HI_{hr} = Either the maximum rated hourly heat input from paragraph (c)(3)(i)(A) of this

section or the hourly heat input as determined under paragraph (c)(3)(ii) of this section (mmBtu).

(B) The quarterly CO_2 mass emissions (tons) for the low mass emissions unit shall be the sum of all of the hourly CO_2 mass emissions in the quarter, as determined under paragraph (c)(4)(iii)(A)of this section.

(C) The year-to-date cumulative CO_2 mass emissions (tons) for the low mass emissions unit shall be the sum of all of the quarterly CO_2 mass emissions, as determined under paragraph (c)(4)(iii)(B) of this section, for all of the calendar quarters in the year to date.

(d) Each unit that qualifies under this section to use the low mass emissions methodology must follow the recordkeeping and reporting requirements pertaining to low mass emissions units in subparts F and G of this part.

(e) The quality control and quality assurance requirements in § 75.21 are not applicable to a low mass emissions unit for which the low mass emissions excepted methodology under paragraph (c) of this section is being used in lieu of a continuous emission monitoring system or an excepted monitoring system under appendix D or E to this part, except for fuel flowmeters used to meet the provisions in paragraph (c)(3)(ii) of this section. However, the owner or operator of a low mass emissions unit shall implement the following quality assurance and quality control provisions:

(1) For low mass emission units or groups of units which use the long term fuel flow methodology under paragraph (c)(3)(ii) of this section and which use fuel billing records to determine fuel usage, the owner or operator shall keep, at the facility, for three years, the records of the fuel billing statements used for long term fuel flow determinations.

(2) For low mass emissions units or groups of units which use the long term fuel flow methodology under paragraph (c)(3)(ii) of this section and which use one of the methods specified in paragraph (c)(3)(ii)(B)(*2*) of this section to determine fuel usage, the owner or operator shall keep, at the facility, a copy of the standard used and shall keep records, for three years, of all measurements obtained for each quarter using the methodology.

(3) For low mass emission units or groups of units which use the long term fuel flow methodology under paragraph (c)(3)(ii) of this section and which use a certified fuel flow meter to determine fuel usage, the owner or operator shall comply with the quality control quality assurance requirements for a fuel flow meter under section 2.1.6 of appendix D of this part.

(4) For each low mass emissions unit for which fuel-and-unit-specific NO_X emission rates are determined in accordance with paragraph (c)(1)(iv) of this section, the owner or operator shall keep, at the facility, records which document the results of all NO_X emission rate tests conducted according to appendix E to this part. If CEMS data are used to determine the fuel-and-unit-specific NO_X emission rates under paragraph (c)(1)(iv)(G) of this section, the owner or operator shall keep, at the facility, records of the CEMS data and the data analysis performed to determine a fuel-and-unit-specific NO_X emission rate. The appendix E test records and historical CEMS data records shall be kept until the fuel and unit specific NO_X emission rates are re-determined.

(5) For each low mass emissions unit for which fuel-and-unit-specific NO_X emission rates are determined in accordance with paragraph (c)(1)(iv) of this section and which has add-on NO_X emission controls of any kind or uses dry low-NO_X technology, the owner or operator shall develop and keep on-site a quality assurance plan which explains the procedures used to document proper operation of the NO_X emission controls. The plan shall include the parameters monitored (e.g., water-to-fuel ratio) and the acceptable ranges for each parameter used to determine proper operation of the unit's NO_X controls.

(6) For unmanned facilities, the records required by paragraphs (e)(1), (e)(2) and (e)(4) of this section may be kept at a central location, rather than at the facility.

TABLE LM–1—SO_2 EMISSION FACTORS (LB/MMBTU) FOR VARIOUS FUEL TYPES

Fuel type	SO_2 emission factors
Pipeline Natural Gas	0.0006 lb/mmBtu.
Other Natural Gas	0.06 lb/mmBtu.
Residual Oil	2.1 lb/mmBtu.
Diesel Fuel	0.5 lb/mmBtu.

TABLE LM–2—NO_X EMISSION RATES (LB/MMBTU) FOR VARIOUS BOILER/FUEL TYPES

Unit type	Fuel type	NO_X emission rate
Turbine	Gas	0.7
Turbine	Oil	1.2
Boiler	Gas	1.5
Boiler	Oil	2

TABLE LM–3—CO_2 EMISSION FACTORS (TON/MMBTU) FOR GAS AND OIL

Fuel type	CO_2 emission factors
Pipeline (or other) Natural Gas.	0.059 ton/mmBtu.
Oil	0.081 ton/mmBtu.

TABLE LM–4—IDENTICAL UNIT TESTING REQUIREMENTS

Number of identical units in the group	Number of appendix E tests required
2	1
3 to 6	2
7	3
>7	n tests; wheren n = number of units divided by 3 and rounded to nearest integer.

TABLE LM–5—DEFAULT GROSS CALORIFIC VALUES (GCVS) FOR VARIOUS FUELS

Fuel	GCV for use in equation LM–2 or LM–3
Pipeline Natural Gas	1050 Btu/scf.
Other Natural Gas	1100 Btu/scf.
Residual Oil	19,700 Btu/lb or 167,500 Btu/gallon.
Diesel Fuel	20,500 Btu/lb or 151,700 Btu/gallon.

TABLE LM–6—DEFAULT SPECIFIC GRAVITY VALUES FOR FUEL OIL

Fuel	Specific gravity (lb/gal)
Residual Oil	8.5
Diesel Fuel	7.4

[63 FR 57500, Oct. 27, 1998, as amended at 64 FR 28592, May 26, 1999; 64 FR 37582, July 12, 1999; 67 FR 40424, 40425, June 12, 2002; 67 FR 53504, Aug. 16, 2002; 73 FR 4344, Jan. 24, 2008]

Subpart C—Operation and Maintenance Requirements

§ 75.20 Initial certification and recertification procedures.

(a) *Initial certification approval process*. The owner or operator shall ensure that each continuous emission or opacity monitoring system required by this part meets the initial certification requirements of this section and shall ensure that all applicable initial certification tests under paragraph (c) of this section are completed by the deadlines specified in § 75.4 and prior to use in the Acid Rain Program. In addition, whenever the owner or operator installs a continuous emission or opacity monitoring system in order to meet the requirements of §§ 75.11 through 75.18, where no continuous emission or opacity monitoring system was previously installed, initial certification is required.

(1) *Notification of initial certification test dates*. The owner or operator or designated representative shall submit a written notice of the dates of initial certification testing at the unit as specified in § 75.61(a)(1).

(2) *Certification application*. The owner or operator shall apply for certification of each continuous emission or opacity monitoring system used under the Acid Rain Program. The owner or operator shall submit the certification application in accordance with § 75.60 and each complete certification application shall include the information specified in § 75.63.

(3) *Provisional approval of certification (or recertification) applications*. Upon the successful completion of the required certification (or recertification) procedures of this section, each continuous emission or opacity monitoring system shall be deemed provisionally certified (or recertified) for use under the Acid Rain Program for a period not to exceed 120 days following receipt by the Administrator of the complete certification (or recertification) application under paragraph (a)(4) of this section. Notwithstanding this paragraph, no

continuous emission or opacity monitor systems for a combustion source seeking to enter the Opt-in Program in accordance with part 74 of this chapter shall be deemed provisionally certified (or recertified) for use under the Acid Rain Program. Data measured and recorded by a provisionally certified (or recertified) continuous emission or opacity monitoring system , operated in accordance with the requirements of appendix B to this part, will be considered valid quality-assured data (retroactive to the date and time of provisional certification or recertification), provided that the Administrator does not invalidate the provisional certification (or recertification) by issuing a notice of disapproval within 120 days of receipt by the Administrator of the complete certification (or recertification) application. Note that when the conditional data validation procedures of paragraph (b)(3) of this section are used for the initial certification (or recertification) of a continuous emissions monitoring system, the date and time of provisional certification (or recertification) of the CEMS may be earlier than the date and time of completion of the required certification (or recertification) tests.

(4) *Certification (or recertification) application formal approval process.* The Administrator will issue a notice of approval or disapproval of the certification (or recertification) application to the owner or operator within 120 days of receipt of the complete certification (or recertification) application. In the event the Administrator does not issue such a notice within 120 days of receipt, each continuous emission or opacity monitoring system which meets the performance requirements of this part and is included in the certification (or recertification) application will be deemed certified (or recertified) for use under the Acid Rain Program.

(i) *Approval notice.* If the certification (or recertification) application is complete and shows that each continuous emission or opacity monitoring system meets the performance requirements of this part, then the Administrator will issue a notice of approval of the certification (or recertification) application within 120 days of receipt.

(ii) *Incomplete application notice.* A certification (or recertification) application will be considered complete when all of the applicable information required to be submitted in § 75.63 has been received by the Administrator, the EPA Regional Office, and the appropriate State and/or local air pollution control agency. If the certification (or recertification) application is not complete, then the Administrator will issue a notice of incompleteness that provides a reasonable timeframe for the designated representative to submit the additional information required to complete the certification (or recertification) application. If the designated representative has not complied with the notice of incompleteness by a specified due date, then the Administrator may issue a notice of disapproval specified under paragraph (a)(4)(iii) of this section. The 120-day review period shall not begin prior to receipt of a complete application.

(iii) *Disapproval notice.* If the certification (or recertification) application shows that any continuous emission or opacity monitoring system does not meet the performance requirements of this part, or if the certification (or recertification) application is incomplete and the requirement for disapproval under paragraph (a)(4)(ii) of this section has been met, the Administrator shall issue a written notice of disapproval of the certification (or recertification) application within 120 days of receipt. By issuing the notice of disapproval, the provisional certification (or recertification) is invalidated by the Administrator, and the data measured and recorded by each uncertified continuous emission or opacity monitoring system shall not be considered valid quality-assured data as follows: from the hour of the probationary calibration error test that began the initial certification (or recertification) test period (if the conditional data validation procedures of paragraph (b)(3) of this section were used to retrospectively validate data); or from the date and time of completion of the invalid certification or recertification tests (if the conditional data validation procedures of paragraph (b)(3) of this section were not used). The owner or operator shall follow the procedures for loss of

initial certification in paragraph (a)(5) of this section for each continuous emission or opacity monitoring system which is disapproved for initial certification. For each disapproved recertification, the owner or operator shall follow the procedures of paragraph (b)(5) of this section.

(iv) *Audit decertification.* The Administrator may issue a notice of disapproval of the certification status of a continuous emission or opacity monitoring system, in accordance with § 75.21.

(5) *Procedures for loss of certification.* When the Administrator issues a notice of disapproval of a certification application or a notice of disapproval of certification status (as specified in paragraph (a)(4) of this section), then:

(i) Until such time, date, and hour as the continuous emission monitoring system can be adjusted, repaired, or replaced and certification tests successfully completed (or, if the conditional data validation procedures in paragraphs (b)(3)(ii) through (b)(3)(ix) of this section are used, until a probationary calibration error test is passed following corrective actions in accordance with paragraph (b)(3)(ii) of this section), the owner or operator shall substitute the following values, as applicable, for each hour of unit operation during the period of invalid data specified in paragraph (a)(4)(iii) of this section or in § 75.21: The maximum potential concentration of SO_2, as defined in section 2.1.1.1 of appendix A to this part, to report SO_2 concentration; the maximum potential NO_X emission rate, as defined in § 72.2 of this chapter, to report NO_X emissions in lb/MMBtu; the maximum potential concentration of NO_X, as defined in section 2.1.2.1 of appendix A to this part, to report NO_X emissions in ppm (when a NO_X concentration monitoring system is used to determine NO_X mass emissions, as defined under § 75.71(a)(2)); the maximum potential concentration of Hg, as defined in section 2.1.7 of appendix A to this part, to report Hg emissions in μgm/scm (when a Hg concentration monitoring system or a sorbent trap monitoring system is used to determine Hg mass emissions, as defined under § 75.81(b)); the maximum potential flow rate, as defined in section 2.1.4.1 of appendix A to this part, to report volumetric flow; the maximum potential concentration of CO_2, as defined in section 2.1.3.1 of appendix A to this part, to report CO_2 concentration data; and either the minimum potential moisture percentage, as defined in section 2.1.5 of appendix A to this part or, if Equation 19–3, 19–4 or 19–8 in Method 19 in appendix A to part 60 of this chapter is used to determine NO_X emission rate, the maximum potential moisture percentage, as defined in section 2.1.6 of appendix A to this part; and

(ii) The designated representative shall submit a notification of certification retest dates as specified in § 75.61(a)(1)(ii) and a new certification application according to the procedures in paragraph (a)(2) of this section; and

(iii) The owner or operator shall repeat all certification tests or other requirements that were failed by the continuous emission or opacity monitoring system, as indicated in the Administrator's notice of disapproval, no later than 30 unit operating days after the date of issuance of the notice of disapproval.

(b) *Recertification approval process.* Whenever the owner or operator makes a replacement, modification, or change in a certified continuous emission monitoring system or continuous opacity monitoring system that may significantly affect the ability of the system to accurately measure or record the SO_2 or CO_2 concentration, stack gas volumetric flow rate, NO_X emission rate, NO_X concentration, Hg concentration, percent moisture, or opacity, or to meet the requirements of § 75.21 or appendix B to this part, the owner or operator shall recertify the continuous emission monitoring system or continuous opacity monitoring system, according to the procedures in this paragraph. Furthermore, whenever the owner or operator makes a replacement, modification, or change to the flue gas handling system or the unit operation that may significantly change the flow or concentration profile, the owner or operator shall recertify the monitoring system according to the procedures in this paragraph. Examples of changes which require recertification include: replacement of

the analyzer; change in location or orientation of the sampling probe or site; and complete replacement of an existing continuous emission monitoring system or continuous opacity monitoring system. The owner or operator shall also recertify the continuous emission monitoring systems for a unit that has recommenced commercial operation following a period of long-term cold storage as defined in § 72.2 of this chapter. The owner or operator shall recertify a continuous opacity monitoring system whenever the monitor path length changes or as required by an applicable State or local regulation or permit. Any change to a flow monitor or gas monitoring system for which a RATA is not necessary shall not be considered a recertification event. In addition, changing the polynomial coefficients or K factor(s) of a flow monitor shall require a 3-load RATA, but is not considered to be a recertification event; however, records of the polynomial coefficients or K factor (s) currently in use shall be maintained on-site in a format suitable for inspection. Changing the coefficient or K factor(s) of a moisture monitoring system shall require a RATA, but is not considered to be a recertification event; however, records of the coefficient or K factor (s) currently in use by the moisture monitoring system shall be maintained on-site in a format suitable for inspection. In such cases, any other tests that are necessary to ensure continued proper operation of the monitoring system (e.g., 3-load flow RATAs following changes to flow monitor polynomial coefficients, linearity checks, calibration error tests, DAHS verifications, etc.) shall be performed as diagnostic tests, rather than as recertification tests. The data validation procedures in paragraph (b)(3) of this section shall be applied to RATAs associated with changes to flow or moisture monitor coefficients, and to linearity checks, 7-day calibration error tests, and cycle time tests, when these are required as diagnostic tests. When the data validation procedures of paragraph (b)(3) of this section are applied in this manner, replace the word ''recertification'' with the word ''diagnostic.''

(1) *Tests required.* For all recertification testing, the owner or operator shall complete all initial certification tests in paragraph (c) of this section that are applicable to the monitoring system, except as otherwise approved by the Administrator. For diagnostic testing after changing the flow rate monitor polynomial coefficients, the owner or operator shall complete a 3-level RATA. For diagnostic testing after changing the K factor or mathematical algorithm of a moisture monitoring system, the owner or operator shall complete a RATA.

(2) *Notification of recertification test dates.* The owner, operator, or designated representative shall submit notice of testing dates for recertification under this paragraph as specified in § 75.61(a)(1)(ii), unless all of the tests in paragraph (c) of this section are required for recertification, in which case the owner or operator shall provide notice in accordance with the notice provisions for initial certification testing in § 75.61(a)(1)(i).

(3) *Recertification test period requirements and data validation.* The data validation provisions in paragraphs (b)(3)(i) through (b)(3)(ix) of this section shall apply to all CEMS recertifications and diagnostic testing. The provisions in paragraphs (b)(3)(ii) through (b)(3)(ix) of this section may also be applied to initial certifications (see sections 6.2(a), 6.3.1(a), 6.3.2(a), 6.4(a) and 6.5(f) of appendix A to this part) and may be used to supplement the linearity check and RATA data validation procedures in sections 2.2.3(b) and 2.3.2(b) of appendix B to this part.

(i) The owner or operator shall use substitute data, according to the standard missing data procedures in §§ 75.33 through 75.37 (or shall report emission data using a reference method or another monitoring system that has been certified or approved for use under this part), in the period extending from the hour of the replacement, modification or change made to a monitoring system that triggers the need to perform recertification testing, until either: the hour of successful completion of all of the required recertification

tests; or the hour in which a probationary calibration error test (according to paragraph (b)(3)(ii) of this section) is performed and passed, following all necessary repairs, adjustments or reprogramming of the monitoring system. The first hour of quality-assured data for the recertified monitoring system shall either be the hour after all recertification tests have been completed or, if conditional data validation is used, the first quality-assured hour shall be determined in accordance with paragraphs (b)(3)(ii) through (b)(3)(ix) of this section. Notwithstanding these requirements, if the replacement, modification, or change requiring recertification of the CEMS is such that the historical data stream is no longer representative (e.g., where the SO_2 concentration and stack flow rate change significantly after installation of a wet scrubber), the owner or operator shall substitute for missing data as follows, in lieu of using the standard missing data procedures in §§ 75.33 through 75.37: for a change that results in a significantly higher concentration or flow rate, substitute maximum potential values according to the procedures in paragraph (a)(5) of this section; or for a change that results in a significantly lower concentration or flow rate, substitute data using the standard missing data procedures. The owner or operator shall then use the initial missing data procedures in § 75.31, beginning with the first hour of quality-assured data obtained with the recertified monitoring system, unless otherwise provided by § 75.34 for units with add-on emission controls.

(ii) Once the modification or change to the CEMS has been completed and all of the associated repairs, component replacements, adjustments, linearization, and reprogramming of the CEMS have been completed, a probationary calibration error test is required to establish the beginning point of the recertification test period. In this instance, the first successful calibration error test of the monitoring system following completion of all necessary repairs, component replacements, adjustments, linearization and reprogramming shall be the probationary calibration error test. The probationary calibration error test must be passed before any of the required recertification tests are commenced.

(iii) Beginning with the hour of commencement of a recertification test period, emission data recorded by the CEMS are considered to be conditionally valid, contingent upon the results of the subsequent recertification tests.

(iv) Each required recertification test shall be completed no later than the following number of unit operating hours (or unit operating days) after the probationary calibration error test that initiates the test period:

(A) For a linearity check and/or cycle time test, 168 consecutive unit operating hours, as defined in § 72.2 of this chapter or, for CEMS installed on common stacks or bypass stacks, 168 consecutive stack operating hours, as defined in § 72.2 of this chapter;

(B) For a RATA (whether normal-load or multiple-load), 720 consecutive unit operating hours, as defined in § 72.2 of this chapter or, for CEMS installed on common stacks or bypass stacks, 720 consecutive stack operating hours, as defined in § 72.2 of this chapter; and

(C) For a 7-day calibration error test, 21 consecutive unit operating days, as defined in § 72.2 of this chapter.

(v) All recertification tests shall be performed hands-off. No adjustments to the calibration of the CEMS, other than the routine calibration adjustments following daily calibration error tests as described in section 2.1.3 of appendix B to this part, are permitted during the recertification test period. Routine daily calibration error tests shall be performed throughout the recertification test period, in accordance with section 2.1.1 of appendix B to this part. The additional calibration error test requirements in section 2.1.3 of appendix B to this part shall also apply during the recertification test period.

(vi) If all of the required recertification tests and required daily calibration error tests are successfully completed in succession with no failures, and if each recertification test is completed within the time period specified in paragraph (b)(3)(iv)(A), (B), or (C) of this section, then all of the conditionally valid emission data recorded

by the CEMS shall be considered quality-assured, from the hour of commencement of the recertification test period until the hour of completion of the required test(s).

(vii) If a required recertification test is failed or aborted due to a problem with the CEMS, or if a daily calibration error test is failed during a recertification test period, data validation shall be done as follows:

(A) If any required recertification test is failed, it shall be repeated. If any recertification test other than a 7-day calibration error test is failed or aborted due to a problem with the CEMS, the original recertification test period is ended, and a new recertification test period must be commenced with a probationary calibration error test. The tests that are required in the new recertification test period will include any tests that were required for the initial recertification event which were not successfully completed and any recertification or diagnostic tests that are required as a result of changes made to the monitoring system to correct the problems that caused the failure of the recertification test. For a 2- or 3-load flow RATA, if the relative accuracy test is passed at one or more load levels, but is failed at a subsequent load level, provided that the problem that caused the RATA failure is corrected without re-linearizing the instrument, the length of the new recertification test period shall be equal to the number of unit operating hours remaining in the original recertification test period, as of the hour of failure of the RATA. However, if relinearization of the flow monitor is required after a flow RATA is failed at a particular load level, then a subsequent 3-load RATA is required, and the new recertification test period shall be 720 consecutive unit (or stack) operating hours. The new recertification test sequence shall not be commenced until all necessary maintenance activities, adjustments, linearizations, and reprogramming of the CEMS have been completed;

(B) If a linearity check, RATA, or cycle time test is failed or aborted due to a problem with the CEMS, all conditionally valid emission data recorded by the CEMS are invalidated, from the hour of commencement of the recertification test period to the hour in which the test is failed or aborted, except for the case in which a multiple-load flow RATA is passed at one or more load levels, failed at a subsequent load level, and the problem that caused the RATA failure is corrected without relinearizing the instrument. In that case, data invalidation shall be prospective, from the hour of failure of the RATA until the commencement of the new recertification test period. Data from the CEMS remain invalid until the hour in which a new recertification test period is commenced, following corrective action, and a probationary calibration error test is passed, at which time the conditionally valid status of emission data from the CEMS begins again;

(C) If a 7-day calibration error test is failed within the recertification test period, previously-recorded conditionally valid emission data from the CEMS are not invalidated. The conditionally valid data status is unaffected, unless the calibration error on the day of the failed 7-day calibration error test exceeds twice the performance specification in section 3 of appendix A to this part, as described in paragraph (b)(3)(vii)(D) of this section; and

(D) If a daily calibration error test is failed during a recertification test period (*i.e.*, the results of the test exceed twice the performance specification in section 3 of appendix A to this part), the CEMS is out-of-control as of the hour in which the calibration error test is failed. Emission data from the CEMS shall be invalidated prospectively from the hour of the failed calibration error test until the hour of completion of a subsequent successful calibration error test following corrective action, at which time the conditionally valid status of data from the monitoring system resumes. Failure to perform a required daily calibration error test during a recertification test period shall also cause data from the CEMS to be invalidated prospectively, from the hour in which the calibration error test was due until the hour of completion of a subsequent successful calibration error test. Whenever a calibration error test

is failed or missed during a recertification test period, no further recertification tests shall be performed until the required subsequent calibration error test has been passed, re-establishing the conditionally valid status of data from the monitoring system. If a calibration error test failure occurs while a linearity check or RATA is still in progress, the linearity check or RATA must be re-started.

(E) Trial gas injections and trial RATA runs are permissible during the recertification test period, prior to commencing a linearity check or RATA, for the purpose of optimizing the performance of the CEMS. The results of such gas injections and trial runs shall not affect the status of previously-recorded conditionally valid data or result in termination of the recertification test period, provided that the following specifications and conditions are met:

(*1*) For gas injections, the stable, ending monitor response is within ±5 percent or within 5 ppm of the tag value of the reference gas;

(*2*) For RATA trial runs, the average reference method reading and the average CEMS reading for the run differ by no more than ±10% of the average reference method value or ±15 ppm, or ±1.5% H_2O, or ±0.02 lb/mmBtu from the average reference method value, as applicable;

(*3*) No adjustments to the calibration of the CEMS are made following the trial injection(s) or run(s), other than the adjustments permitted under section 2.1.3 of appendix B to this part; and

(*4*) The CEMS is not repaired, re-linearized or reprogrammed (e.g., changing flow monitor polynomial coefficients, linearity constants, or K-factors) after the trial injection(s) or run(s).

(F) If the results of any trial gas injection(s) or RATA run(s) are outside the limits in paragraphs (b)(3)(vii)(E)(*1*) or (*2*) of this section or if the CEMS is repaired, re-linearized or reprogrammed after the trial injection(s) or run(s), the trial injection(s) or run(s) shall be counted as a failed linearity check or RATA attempt. If this occurs, follow the procedures pertaining to failed and aborted recertification tests in paragraphs (b)(3)(vii)(A) and (b)(3)(vii)(B) of this section.

(viii) If any required recertification test is not completed within its allotted time period, data validation shall be done as follows. For a late linearity test, RATA, or cycle time test that is passed on the first attempt, data from the monitoring system shall be invalidated from the hour of expiration of the recertification test period until the hour of completion of the late test. For a late 7-day calibration error test, whether or not it is passed on the first attempt, data from the monitoring system shall also be invalidated from the hour of expiration of the recertification test period until the hour of completion of the late test. For a late linearity test, RATA, or cycle time test that is failed on the first attempt or aborted on the first attempt due to a problem with the monitor, all conditionally valid data from the monitoring system shall be considered invalid back to the hour of the first probationary calibration error test which initiated the recertification test period. Data from the monitoring system shall remain invalid until the hour of successful completion of the late recertification test and any additional recertification or diagnostic tests that are required as a result of changes made to the monitoring system to correct problems that caused failure of the late recertification test.

(ix) If any required recertification test of a monitoring system has not been completed by the end of a calendar quarter and if data contained in the quarterly report are conditionally valid pending the results of test(s) to be completed in a subsequent quarter, the owner or operator shall indicate this by means of a suitable conditionally valid data flag in the electronic quarterly report for that quarter. The owner or operator shall resubmit the report for that quarter if the required recertification test is subsequently failed. In the resubmitted report, the owner or operator shall use the appropriate missing data routine in § 75.31 or § 75.33 to replace with substitute data each hour of conditionally valid data that was invalidated by the failed recertification test. Alternatively, if any required recertification

test is not completed by the end of a particular calendar quarter but is completed no later than 30 days after the end of that quarter (*i.e.*, prior to the deadline for submitting the quarterly report under § 75.64), the test data and results may be submitted with the earlier quarterly report even though the test date(s) are from the next calendar quarter. In such instances, if the recertification test(s) are passed in accordance with the provisions of paragraph (b)(3) of this section, conditionally valid data may be reported as quality-assured, in lieu of reporting a conditional data flag. If the recertification test(s) is failed and if conditionally valid data are replaced, as appropriate, with substitute data, then neither the reporting of a conditional data flag nor resubmission is required. In addition, if the owner or operator uses a conditionally valid data flag in any of the four quarterly reports for a given year, the owner or operator shall indicate the final status of the conditionally valid data (*i.e.*, resolved or unresolved) in the annual compliance certification report required under § 72.90 of this chapter for that year. The Administrator may invalidate any conditionally valid data that remains unresolved at the end of a particular calendar year and may require the owner or operator to resubmit one or more of the quarterly reports for that calendar year, replacing the unresolved conditionally valid data with substitute data values determined in accordance with § 75.31 or § 75.33, as appropriate.

(4) *Recertification application*. The designated representative shall apply for recertification of each continuous emission or opacity monitoring system used under the Acid Rain Program. The owner or operator shall submit the recertification application in accordance with § 75.60, and each complete recertification application shall include the information specified in § 75.63.

(5) *Approval or disapproval of request for recertification*. The procedures for provisional certification in paragraph (a)(3) of this section shall apply to recertification applications. The Administrator will issue a notice of approval, disapproval, or incompleteness according to the procedures in paragraph (a)(4) of this section. In the event that a recertification application is disapproved, data from the monitoring system are invalidated and the applicable missing data procedures in §§ 75.31 or 75.33 shall be used from the date and hour of receipt of the disapproval notice back to the hour of the adjustment or change to the CEMS that triggered the need for recertification testing or, if the conditional data validation procedures in paragraphs (b)(3)(ii) through (b)(3)(ix) of this section were used, back to the hour of the probationary calibration error test that began the recertification test period. Data from the monitoring system remain invalid until all required recertification tests have been passed or until a subsequent probationary calibration error test is passed, beginning a new recertification test period. The owner or operator shall repeat all recertification tests or other requirements, as indicated in the Administrator's notice of disapproval, no later than 30 unit operating days after the date of issuance of the notice of disapproval. The designated representative shall submit a notification of the recertification retest dates, as specified in § 75.61(a)(1)(ii), and shall submit a new recertification application according to the procedures in paragraph (b)(4) of this section.

(c) *Initial certification and recertification procedures*. Prior to the deadline in § 75.4, the owner or operator shall conduct initial certification tests and in accordance with § 75.63, the designated representative shall submit an application to demonstrate that the continuous emission or opacity monitoring system and components thereof meet the specifications in appendix A to this part. The owner or operator shall compare reference method values with output from the automated data acquisition and handling system that is part of the continuous emission monitoring system being tested. Except as otherwise specified in paragraphs (b)(1), (d), and (e) of this section, and in sections 6.3.1 and 6.3.2 of appendix A to this part, the owner or operator shall perform the following tests for initial certification or recertification of continuous emission or opacity monitoring systems or components according to the requirements of appendix A to this part:

(1) For each SO_2 pollutant concentration monitor, each NO_X concentration monitoring system used to determine NO_X mass emissions, as defined under § 75.71(a)(2), each Hg concentration monitoring system, and each NO_X-diluent continuous emission monitoring system:

(i) A 7-day calibration error test, where, for the NO_X -diluent continuous emission monitoring system, the test is performed separately on the NO_X pollutant concentration monitor and the diluent gas monitor;

(ii) A linearity check, where, for the NO_X-diluent continuous emission monitoring system, the test is performed separately on the NO_X pollutant concentration monitor and the diluent gas monitor. For Hg monitors, perform this check with elemental Hg standards;

(iii) A relative accuracy test audit. For the NO_X-diluent continuous emission monitoring system, the RATA shall be done on a system basis, in units of lb/MMBtu. For the NO_X concentration monitoring system, the RATA shall be done on a ppm basis. For the Hg concentration monitoring system, the RATA shall be done on a μgm/scm basis;

(iv) A bias test;

(v) A cycle time test, (where, for the NO_X-diluent continuous emission monitoring system, the test is performed separately on the NO_X pollutant concentration monitor and the diluent gas monitor); and

(vi) For Hg monitors only, a 3-level system integrity check, using a NIST-traceable source of oxidized Hg, as described in section 6.2 of appendix A to this part. This test is not required for an Hg monitor that does not have a converter.

(2) For each flow monitor:

(i) A 7-day calibration error test;

(ii) Relative accuracy test audits, as follows:

(A) A single-load (or single-level) RATA at the normal load (or level), as defined in section 6.5.2.1(d) of appendix A to this part, for a flow monitor installed on a peaking unit or bypass stack, or for a flow monitor exempted from multiple-level RATA testing under section 6.5.2(e) of appendix A to this part;

(B) For all other flow monitors, a RATA at each of the three load levels (or operating levels) corresponding to the three flue gas velocities described in section 6.5.2(a) of appendix A to this part;

(iii) A bias test for the single-load (or single-level) flow RATA described in paragraph (c)(2)(ii)(A) of this section; and

(iv) A bias test (or bias tests) for the 3-level flow RATA described in paragraph (c)(2)(ii)(B) of this section, at the following load or operational level(s):

(A) At each load level designated as normal under section 6.5.2.1(d) of appendix A to this part, for units that produce electrical or thermal output, or

(B) At the operational level identified as normal in section 6.5.2.1(d) of appendix A to this part, for units that do not produce electrical or thermal output.

(3) The initial certification test data from an O_2 or a CO_2 diluent gas monitor certified for use in a NO_X continuous emission monitoring system may be submitted to meet the requirements of paragraph (c)(4) of this section. Also, for a diluent monitor that is used both as a CO_2 monitoring system and to determine heat input, only one set of diluent monitor certification data need be submitted (under the component and system identification numbers of the CO_2 monitoring system).

(4) For each CO_2 pollutant concentration monitor, each CO_2 monitoring system that uses an O_2 monitor to determine CO_2 concentration, and each diluent gas monitor used only to monitor heat input rate:

(i) A 7-day calibration error test;

(ii) A linearity check;

(iii) A relative accuracy test audit, where, for an O_2 monitor used to determine CO_2 concentration, the CO_2 reference method shall be used for the RATA; and

(iv) A cycle-time test.

(5) For each continuous moisture monitoring system consisting of wet- and dry-basis O_2 analyzers:

(i) A 7-day calibration error test of each O_2 analyzer;

(ii) A cycle time test of each O_2 analyzer;

(iii) A linearity test of each O_2 analyzer; and

(iv) A RATA, directly comparing the percent moisture measured by the monitoring system to a reference method.

(6) For each continuous moisture sensor: A RATA, directly comparing the percent moisture measured by the monitor sensor to a reference method.

(7) For a continuous moisture monitoring system consisting of a temperature sensor and a data acquisition and handling system (DAHS) software component programmed with a moisture lookup table:

(i) A demonstration that the correct moisture value for each hour is being taken from the moisture lookup tables and applied to the emission calculations. At a minimum, the demonstration shall be made at three different temperatures covering the normal range of stack temperatures from low to high.

(ii) [Reserved]

(8) The owner or operator shall ensure that initial certification or recertification of a continuous opacity monitor for use under the Acid Rain Program is conducted according to one of the following procedures:

(i) Performance of the tests for initial certification or recertification, according to the requirements of Performance Specification 1 in appendix B to part 60 of this chapter; or

(ii) A continuous opacity monitoring system tested and certified previously under State or other Federal requirements to meet the requirements of Performance Specification 1 shall be deemed certified for the purposes of this part.

(9) For each sorbent trap monitoring system, perform a RATA, on a μgm/dscm basis, and a bias test.

(10) For the automated data acquisition and handling system, tests designed to verify:

(i) Proper computation of hourly averages for pollutant concentrations, flow rate, pollutant emission rates, and pollutant mass emissions; and

(ii) Proper computation and application of the missing data substitution procedures in subpart D of this part and the bias adjustment factors in section 7 of appendix A to this part.

(11) The owner or operator shall provide adequate facilities for initial certification or recertification testing that include:

(i) Sampling ports adequate for test methods applicable to such facility, such that:

(A) Volumetric flow rate, pollutant concentration, and pollutant emission rates can be accurately determined by applicable test methods and procedures; and

(B) A stack or duct free of cyclonic flow during performance tests is available, as demonstrated by applicable test methods and procedures.

(ii) Basic facilities (e.g., electricity) for sampling and testing equipment.

(d) *Initial certification and recertification and quality assurance procedures for optional backup continuous emission monitoring systems*—(1) *Redundant backups*. The owner or operator of an optional redundant backup CEMS shall comply with all the requirements for initial certification and recertification according to the procedures specified in paragraphs (a), (b), and (c) of this section. The owner or operator shall operate the redundant backup CEMS during all periods of unit operation, except for periods of calibration, quality assurance, maintenance, or repair. The owner or operator shall perform upon the redundant backup CEMS all quality assurance and quality control procedures specified in appendix B to this part, except that the daily assessments in section 2.1 of appendix B to this part are optional for days on which the redundant backup CEMS is not used to report emission data under this part. For any day on which a redundant backup CEMS is used to report emission data, the system must meet all of the applicable daily assessment criteria in appendix B to this part.

(2) *Non-redundant backups*. The owner or operator of an optional non-redundant backup CEMS or like-kind replacement analyzer shall comply with all of the following requirements for initial certification, quality assurance, recertification, and data reporting:

(i) Except as provided in paragraph (d)(2)(v) of this section, for a regular non-redundant backup CEMS (*i.e.*, a non-redundant backup CEMS that has

its own separate probe, sample interface, and analyzer), or a non-redundant backup flow monitor, all of the tests in paragraph (c) of this section are required for initial certification of the system, except for the 7-day calibration error test.

(ii) For a like-kind replacement non-redundant backup analyzer (*i.e.*, a non-redundant backup analyzer that uses the same probe and sample interface as a primary monitoring system), no initial certification of the analyzer is required. A non-redundant backup analyzer, connected to the same probe and interface as a primary CEMS in order to satisfy the dual span requirements of section 2.1.1.4 or 2.1.2.4 of appendix A to this part, shall be treated in the same manner as a like-kind replacement analyzer.

(iii) Each non-redundant backup CEMS or like-kind replacement analyzer shall comply with the daily and quarterly quality assurance and quality control requirements in appendix B to this part for each day and quarter that the non-redundant backup CEMS or like-kind replacement analyzer is used to report data, and shall meet the additional linearity and calibration error test requirements specified in this paragraph. The owner or operator shall ensure that each non-redundant backup CEMS or like-kind replacement analyzer passes a linearity check (for pollutant concentration and diluent gas monitors) or a calibration error test (for flow monitors) prior to each use for recording and reporting emissions. For a primary NO_X-diluent CEMS consisting of the primary pollutant analyzer and a like-kind replacement diluent analyzer (or vice-versa), provided that the primary pollutant or diluent analyzer (as applicable) is operating and is not out-of-control with respect to any of its quality assurance requirements, only the like-kind replacement analyzer must pass a linearity check before the system is used for data reporting. When a non-redundant backup CEMS or like-kind replacement analyzer is brought into service, prior to conducting the linearity test, a probationary calibration error test (as described in paragraph (b)(3)(ii) of this section), which will begin a period of conditionally valid data, may be performed in order to allow the validation of data retrospectively, as follows. Conditionally valid data from the CEMS or like-kind replacement analyzer are validated back to the hour of completion of the probationary calibration error test if the following conditions are met: if no adjustments are made to the CEMS or like-kind replacement analyzer other than the allowable calibration adjustments specified in section 2.1.3 of appendix B to this part between the probationary calibration error test and the successful completion of the linearity test; and if the linearity test is passed within 168 unit (or stack) operating hours of the probationary calibration error test. However, if the linearity test is performed within 168 unit or stack operating hours but is either failed or aborted due to a problem with the CEMS or like-kind replacement analyzer, then all of the conditionally valid data are invalidated back to the hour of the probationary calibration error test, and data from the non-redundant backup CEMS or from the primary monitoring system of which the like-kind replacement analyzer is a part remain invalid until the hour of completion of a successful linearity test. Notwithstanding this requirement, the conditionally valid data status may be re-established after a failed or aborted linearity check, if corrective action is taken and a calibration error test is subsequently passed. However, in no case shall the use of conditional data validation extend for more than 168 unit or stack operating hours beyond the date and time of the original probationary calibration error test when the analyzer was brought into service.

(iv) When data are reported from a non-redundant backup CEMS or like-kind replacement analyzer, the appropriate bias adjustment factor shall be determined as follows:

(A) For a regular non-redundant backup CEMS, as described in paragraph (d)(2)(i) of this section, apply the bias adjustment factor from the most recent RATA of the non-redundant backup system (even if that RATA was done more than 12 months previously); or

(B) When a like-kind replacement non-redundant backup analyzer is used as a component of a primary CEMS (as described in paragraph (d)(2)(ii) of this section), apply the primary monitoring system bias adjustment factor.

(v) For each parameter monitored (*i.e.*, SO_2, CO_2, O_2, NO_X, Hg or flow rate) at each unit or stack, a regular non-redundant backup CEMS may not be used to report data at that affected unit or common stack for more than 720 hours in any one calendar year (or 720 hours in any ozone season, for sources that report emission data only during the ozone season, in accordance with § 75.74(c)), unless the CEMS passes a RATA at that unit or stack. For each parameter monitored at each unit or stack, the use of a like-kind replacement non-redundant backup analyzer (or analyzers) is restricted to 720 cumulative hours per calendar year (or ozone season, as applicable), unless the owner or operator redesignates the like-kind replacement analyzer(s) as component(s) of regular non-redundant backup CEMS and each redesignated CEMS passes a RATA at that unit or stack.

(vi) For each regular non-redundant backup CEMS, no more than eight successive calendar quarters shall elapse following the quarter in which the last RATA of the CEMS was done at a particular unit or stack, without performing a subsequent RATA. Otherwise, the CEMS may not be used to report data from that unit or stack until the hour of completion of a passing RATA at that location.

(vii) Each regular non-redundant backup CEMS shall be represented in the monitoring plan required under § 75.53 as a separate monitoring system, with unique system and component identification numbers. When like-kind replacement non-redundant backup analyzers are used, the owner or operator shall represent each like-kind replacement analyzer used during a particular calendar quarter in the monitoring plan required under § 75.53 as a component of a primary monitoring system. The owner or operator shall also assign a unique component identification number to each like-kind replacement analyzer, beginning with the letters ''LK'' (*e.g.*, ''LK1,'' ''LK2,'' etc.) and shall specify the manufacturer, model and serial number of the like-kind replacement analyzer. This information may be added, deleted or updated as necessary, from quarter to quarter. The owner or operator shall also report data from the like-kind replacement analyzer using the system identification number of the primary monitoring system and the assigned component identification number of the like-kind replacement analyzer. For the purposes of the electronic quarterly report required under § 75.64, the owner or operator may manually enter the appropriate component identification number(s) of any like-kind replacement analyzer(s) used for data reporting during the quarter.

(viii) When reporting data from a certified regular non-redundant backup CEMS, use a method of determination (MODC) code of ''02.'' When reporting data from a like-kind replacement non-redundant backup analyzer, use a MODC of ''17'' (see Table 4a under § 75.57). For the purposes of the electronic quarterly report required under § 75.64, the owner or operator may manually enter the required MODC of ''17'' for a like-kind replacement analyzer.

(ix) For non-redundant backup Hg CEMS and sorbent trap monitoring systems, and for like-kind replacement Hg analyzers, the following provisions apply in addition to, or, in some cases, in lieu of, the general requirements in paragraphs (d)(2)(i) through (d)(2)(viii) of this section:

(A) When a certified sorbent trap monitoring system is brought into service as a regular non-redundant backup monitoring system, the system shall be operated according to the procedures in § 75.15 and appendix K of this part;

(B) When a regular non-redundant backup Hg CEMS or a like-kind replacement Hg analyzer is brought into service, a linearity check with elemental Hg standards, as described in paragraph (c)(1)(ii) of this section and section 6.2 of appendix A of this part, and a single-point system integrity check, as described in section 2.6 of appendix B of this part, shall be performed. Alternatively, a 3-level system

integrity check, as described in paragraph (c)(1)(vi) of this section and paragraph (g) of section 6.2 in appendix A of this part, may be performed in lieu of these two tests.

(C) The weekly single-point system integrity checks described in section 2.6 of appendix B of this part are required as long as a non-redundant backup Hg CEMS or like-kind replacement Hg analyzer remains in service, unless the daily calibrations of the Hg analyzer are done using a NIST-traceable source of oxidized Hg.

(3) *Reference method backups.* A monitoring system that is operated as a reference method backup system pursuant to the reference method requirements of methods 2, 6C, 7E, or 3A in appendix A of part 60 of this chapter need not perform and pass the certification tests required by paragraph (c) of this section prior to its use pursuant to this paragraph.

(e) *Certification/recertification procedures for either peaking unit or by-pass stack/duct continuous emission monitoring systems.* The owner or operator of either a peaking unit or by-pass stack/duct continuous emission monitoring system shall comply with all the requirements for certification or recertification according to the procedures specified in paragraphs (a), (b), and (c) of this section, except as follows: the owner or operator need only perform one nine-run relative accuracy test audit for certification or recertification of a flow monitor installed on the by-pass stack/duct or on the stack/duct used only by affected peaking unit(s). The relative accuracy test audit shall be performed during normal operation of the peaking unit(s) or the by-pass stack/duct.

(f) *Certification/recertification procedures for alternative monitoring systems.* The designated representative representing the owner or operator of each alternative monitoring system approved by the Administrator as equivalent to or better than a continuous emission monitoring system according to the criteria in subpart E of this part shall apply for certification to the Administrator prior to use of the system under the Acid Rain Program, and shall apply for recertification to the Administrator following a replacement, modification, or change according to the procedures in paragraph (c) of this section. The owner or operator of an alternative monitoring system shall comply with the notification and application requirements for certification or recertification according to the procedures specified in paragraphs (a) and (b) of this section.

(g) *Initial certification and recertification procedures for excepted monitoring systems under appendices D and E.* The owner or operator of a gas-fired unit, oil-fired unit, or diesel-fired unit using the optional protocol under appendix D or E to this part shall ensure that an excepted monitoring system under appendix D or E to this part meets the applicable general operating requirements of § 75.10, the applicable requirements of appendices D and E to this part, and the initial certification or recertification requirements of this paragraph.

(1) *Initial certification and recertification testing.* The owner or operator shall use the following procedures for initial certification and recertification of an excepted monitoring system under appendix D or E to this part.

(i) When the optional SO_2 mass emissions estimation procedure in appendix D to this part or the optional NO_X emissions estimation protocol in appendix E to this part is used, the owner or operator shall provide data from a flowmeter accuracy test (or shall provide a statement of calibration if the flowmeter meets the accuracy standard by design) for each fuel flowmeter, according to section 2.1.5.1 of appendix D to this part. For orifice, nozzle, and venturi-type flowmeters, the results of primary element visual inspections and/or calibrations of the transmitters or transducers shall also be provided.

(ii) For the automated data acquisition and handling system used under either the optional SO_2 mass emissions estimation procedure in appendix D of this part or the optional NO_X emissions estimation protocol in appendix E of this part, the owner or operator shall perform tests designed to verify:

(A) The proper computation of hourly averages for pollutant concentrations, fuel flow rates, emission rates, heat input, and pollutant mass emissions; and

(B) Proper computation and application of the missing data substitution procedures in appendix D or E of this part.

(iii) When the optional NO_X emissions protocol in appendix E is used, the owner or operator shall complete all initial performance testing under section 2.1 of appendix E.

(2) *Initial certification, recertification, and QA testing notification.* The designated representative shall provide initial certification testing notification, recertification testing notification, and routine periodic quality-assurance testing, as specified in § 75.61. Initial certification testing notification, recertification testing notification, or periodic quality assurance testing notification is not required for an excepted monitoring system under appendix D to this part.

(3) *Monitoring plan.* The designated representative shall submit an initial monitoring plan in accordance with § 75.62(a).

(4) *Initial certification or recertification application.* The designated representative shall submit an initial certification or recertification application in accordance with §§ 75.60 and 75.63.

(5) *Provisional approval of initial certification and recertification applications.* Upon the successful completion of the required initial certification or recertification procedures for each excepted monitoring system under appendix D or E to this part, each excepted monitoring system under appendix D or E to this part shall be deemed provisionally certified (or recertified) for use under the Acid Rain Program during the period for the Administrator's review. The provisions for the initial certification or recertification application formal approval process in paragraph (a)(4) of this section shall apply, except that the term ''excepted monitoring system'' shall apply rather than ''continuous emission or opacity monitoring system'' and except that the procedures for loss of certification or for disapproval of a recertification request in paragraph (g)(7) of this section shall apply rather than the procedures for loss of certification or denial of a recertification request in paragraph (a)(5) or (b)(5) of this section. Data measured and recorded by a provisionally certified (or recertified) excepted monitoring system under appendix D or E to this part will be considered quality-assured data from the date and time of completion of the last initial certification or recertification test, provided that the Administrator does not revoke the provisional certification or recertification by issuing a notice of disapproval in accordance with the provisions in paragraph (a)(4) or (b)(5) of this section.

(6) *Recertification requirements.* Recertification of an excepted monitoring system under appendix D or E to this part is required for any modification to the system or change in operation that could significantly affect the ability of the system to accurately account for emissions and for which the Administrator determines that an accuracy test of the fuel flowmeter or a retest under appendix E to this part to re-establish the NO_X correlation curve is required. Examples of such changes or modifications include fuel flowmeter replacement, changes in unit configuration, or exceedance of operating parameters.

(7) *Procedures for loss of certification or recertification for excepted monitoring systems under appendices D and E to this part.* In the event that a certification or recertification application is disapproved for an excepted monitoring system, data from the monitoring system are invalidated, and the applicable missing data procedures in section 2.4 of appendix D or section 2.5 of appendix E to this part shall be used from the date and hour of receipt of such notice back to the hour of the provisional certification. Data from the excepted monitoring system remain invalid until all required tests are repeated and the excepted monitoring system is again provisionally certified. The owner or operator shall repeat all certification or recertification tests or other requirements, as indicated in the Administrator's notice of disapproval, no later than 30 unit operating days after the date of issuance of the notice of disapproval. The designated representative shall submit a notification of the certification or recertification retest dates if required under paragraph (g)(2) of this section and shall

submit a new certification or recertification application according to the procedures in paragraph (g)(4) of this section.

(h) *Initial certification and recertification procedures for low mass emission units using the excepted methodologies under § 75.19.* The owner or operator of a gas-fired or oil-fired unit using the low mass emissions excepted methodology under § 75.19 shall meet the applicable general operating requirements of § 75.10, the applicable requirements of § 75.19, and the applicable certification requirements of this paragraph.

(1) *Monitoring plan.* The designated representative shall submit a monitoring plan in accordance with §§ 75.53 and 75.62.

(2) *Certification application.* The designated representative shall submit a certification application in accordance with § 75.63(a)(1)(ii).

(3) *Approval of certification applications.* The provisions for the certification application formal approval process in the introductory text of paragraph (a)(4) and in paragraphs (a)(4)(i), (ii), and (iv) of this section shall apply, except that ''continuous emission or opacity monitoring system'' shall be replaced with ''low mass emissions excepted methodology.'' Provisional certification status for the low mass emissions methodology begins on the date of submittal (consistent with the definition of ''submit'' in § 72.2 of this chapter) of a complete certification application, and the methodology is considered to be certified either upon receipt of a written approval notice from the Administrator or, if such notice is not provided, at the end of the Administrator's 120-day review period. However, in contrast to CEM systems or appendix D and E monitoring systems, a provisionally certified or certified low mass emissions excepted methodology may not be used to report data under the Acid Rain Program or in a NO_X mass emissions reduction program under subpart H of this part prior to the applicable commencement date specified in § 75.19(a)(2)(i).

(4) *Disapproval of low mass emissions unit certification applications.* If the Administrator determines that the certification application for a low mass emissions unit does not demonstrate that the unit meets the requirements of §§ 75.19(a) and (b), the Administrator shall issue a written notice of disapproval of the certification application within 120 days of receipt. By issuing the notice of disapproval, the provisional certification is invalidated by the Administrator, and any emission data reported using the excepted methodology during the Administrator's 120-day review period shall be considered invalid. The owner or operator shall use the following procedures when a certification application is disapproved:

(i) The owner or operator shall substitute the following values, as applicable, for each hour of unit operation in which data were reported using the low mass emissions methodology until such time, date, and hour as continuous emission monitoring systems or excepted monitoring systems, where applicable, are installed and provisionally certified: the maximum potential concentration of SO_2, as defined in section 2.1.1.1 of appendix A to this part; the maximum potential fuel flowrate, as defined in section 2.4.2 of appendix D to this part; the maximum potential values of fuel sulfur content, GCV, and density (if applicable) in Table D–6 of appendix D to this part; the maximum potential NO_X emission rate, as defined in § 72.2 of this chapter; the maximum potential flow rate, as defined in section 2.1.4.1 of appendix A to this part; or the maximum potential CO_2 concentration as defined in section 2.1.3.1 of appendix A to this part. For a unit subject to a State or federal NO_X mass reduction program where the owner or operator intends to monitor NO_X mass emissions with a NO_X pollutant concentration monitor and a flow monitoring system, substitute for NO_X concentration using the maximum potential concentration of NO_X, as defined in section 2.1.2.1 of appendix A to this part, and substitute for volumetric flow using the maximum potential flow rate, as defined in section 2.1.4.1 of appendix A to this part; and

(ii) The designated representative shall submit a notification of certification test dates for the required monitoring systems, as specified in

§ 75.61(a)(1)(i), and shall submit a certification application according to the procedures in paragraph (a)(2) of this section.

(5) *Recertification*. Recertification of an approved low mass emissions excepted methodology is not required. Once the Administrator has approved the methodology for use, the owner or operator is subject to the on-going qualification and disqualification procedures in § 75.19(b), on an annual or ozone season basis, as applicable.

[58 FR 3701, Jan. 11, 1993, as amended at 60 FR 26524, May 17, 1995; 60 FR 40296, Aug. 8, 1995; 61 FR 59158, Nov. 20, 1996; 63 FR 57506, Oct. 27, 1998; 64 FR 28592, May 26, 1999; 67 FR 40431, June 12, 2002; 70 FR 28678, May 18, 2005; 72 FR 51527, Sept. 7, 2007; 73 FR 4345, Jan. 24, 2008]

§ 75.21 Quality assurance and quality control requirements.

(a) *Continuous emission monitoring systems*. The owner or operator of an affected unit shall operate, calibrate and maintain each continuous emission monitoring system used to report emission data under the Acid Rain Program as follows:

(1) The owner or operator shall operate, calibrate and maintain each primary and redundant backup continuous emission monitoring system according to the quality assurance and quality control procedures in appendix B of this part.

(2) The owner or operator shall ensure that each non-redundant backup CEMS meets the quality assurance requirements of § 75.20(d) for each day and quarter that the system is used to report data.

(3) The owner or operator shall perform quality assurance upon a reference method backup monitoring system according to the requirements of method 2, 6C, 7E, or 3A in appendix A of part 60 of this chapter (supplemented, as necessary, by guidance from the Administrator), or one of the Hg reference methods in § 75.22, as applicable, instead of the procedures specified in appendix B of this part.

(4) The owner or operator of a unit with an SO_2 continuous emission monitoring system is not required to perform the daily or quarterly assessments of the SO_2 monitoring system under appendix B to this part on any day or in any calendar quarter in which only gaseous fuel is combusted in the unit if, during those days and calendar quarters, SO_2 emissions are determined in accordance with § 75.11(e)(1). However, such assessments are permissible, and if any daily calibration error test or linearity test of the SO_2 monitoring system is failed while the unit is combusting only gaseous fuel, the SO_2 monitoring system shall be considered out-of-control. The length of the out-of-control period shall be determined in accordance with the applicable procedures in section 2.1.4 or 2.2.3 of appendix B to this part.

(5) For a unit with an SO_2 continuous monitoring system, in which gaseous fuel that is very low sulfur fuel (as defined in § 72.2 of this chapter) is sometimes burned as a primary or backup fuel and in which higher-sulfur fuel(s) such as oil or coal are, at other times, burned as primary or backup fuel(s), the owner shall perform the relative accuracy test audits of the SO_2 monitoring system (as required by section 6.5 of appendix A to this part and section 2.3.1 of appendix B to this part) only when the higher-sulfur fuel is combusted in the unit and shall not perform SO_2 relative accuracy test audits when the very low sulfur gaseous fuel is the only fuel being combusted.

(6) If the designated representative certifies that a unit with an SO_2 monitoring system burns only very low sulfur fuel (as defined in § 72.2 of this chapter), the SO_2 monitoring system is exempted from the relative accuracy test audit requirements in appendices A and B to this part.

(7) If the designated representative certifies that a particular unit with an SO_2 monitoring system combusts primarily fuel(s) that are very low sulfur fuel(s) (as defined in § 72.2 of this chapter) and combusts higher sulfur fuel(s) only for infrequent, non-routine operations (*e.g.*, only as emergency backup fuel(s) or for short-term testing), the SO_2 monitoring system shall be exempted from the RATA requirements of appendices A and B to this part in any calendar year that the unit combusts the higher sulfur fuel(s) for no more than 480 hours. If, in a particular calendar year, the higher-sulfur fuel

usage exceeds 480 hours, the owner or operator shall perform a RATA of the SO_2 monitor (while combusting the higher-sulfur fuel) either by the end of the calendar quarter in which the exceedance occurs or by the end of a 720 unit (or stack) operating hour grace period (under section 2.3.3 of appendix B to this part) following the quarter in which the exceedance occurs.

(8) The quality assurance provisions of §§ 75.11(e)(3)(i) through 75.11(e)(3)(iv) shall apply to all units with SO_2 monitoring systems during hours in which only very low sulfur fuel (as defined in § 72.2 of this chapter) is combusted in the unit.

(9) Provided that a unit with an SO_2 monitoring system is not exempted from the SO_2 RATA requirements of this part under paragraphs (a)(6) or (a)(7) of this section, any calendar quarter during which a unit combusts only very low sulfur fuel (as defined in § 72.2 of this chapter) shall be excluded in determining the quarter in which the next relative accuracy test audit must be performed for the SO_2 monitoring system. However, no more than eight successive calendar quarters shall elapse after a relative accuracy test audit of an SO_2 monitoring system, without a subsequent relative accuracy test audit having been performed. The owner or operator shall ensure that a relative accuracy test audit is performed, in accordance with paragraph (a)(5) of this section, either by the end of the eighth successive elapsed calendar quarter since the last RATA or by the end of a 720 unit (or stack) operating hour grace period, as provided in section 2.3.3 of appendix B to this part.

(10) The owner or operator who, in accordance with § 75.11(e)(1), uses a certified flow monitor and a certified diluent monitor and Equation F–23 in appendix F to this part to calculate SO_2 emissions during hours in which a unit combusts only natural gas or pipeline natural gas (as defined in § 72.2 of this chapter) shall meet all quality control and quality assurance requirements in appendix B to this part for the flow monitor and the diluent monitor.

(b) *Continuous opacity monitoring systems.* The owner or operator of an affected unit shall operate, calibrate, and maintain each continuous opacity monitoring system used under the Acid Rain Program according to the procedures specified for State Implementation Plans, pursuant to part 51, appendix M of this chapter.

(c) *Calibration gases.* The owner or operator shall ensure that all calibration gases used to quality assure the operation of the instrumentation required by this part shall meet the definition in § 72.2 of this chapter.

(d) *Notification for periodic relative accuracy test audits.* The owner or operator or the designated representative shall submit a written notice of the dates of relative accuracy testing as specified in § 75.61.

(e) *Consequences of audits.* The owner or operator shall invalidate data from a continuous emission monitoring system or continuous opacity monitoring system upon failure of an audit under appendix B to this part or any other audit, beginning with the unit operating hour of completion of a failed audit as determined by the Administrator. The owner or operator shall not use invalidated data for reporting either emissions or heat input, nor for calculating monitor data availability.

(1) *Audit decertification.* Whenever both an audit of a continuous emission or opacity monitoring system (or component thereof, including the data acquisition and handling system), of any excepted monitoring system under appendix D or E to this part, or of any alternative monitoring system under subpart E of this part, and a review of the initial certification application or of a recertification application, reveal that any system or component should not have been certified or recertified because it did not meet a particular performance specification or other requirement of this part, both at the time of the initial certification or recertification application submission and at the time of the audit, the Administrator will issue a notice of disapproval of the certification status of such system or component. For the purposes of this paragraph, an audit shall be either a field audit of the facility or an audit of any information submitted to EPA or the State agency regarding the facility. By issuing the notice of disapproval, the certification

status is revoked prospectively by the Administrator. The data measured and recorded by each system shall not be considered valid quality-assured data from the date of issuance of the notification of the revoked certification status until the date and time that the owner or operator completes subsequently approved initial certification or recertification tests. The owner or operator shall follow the procedures in § 75.20(a)(5) for initial certification or § 75.20(b)(5) for recertification to replace, prospectively, all of the invalid, non-quality-assured data for each disapproved system.

(2) *Out-of-control period*. Whenever a continuous emission monitoring system or continuous opacity monitoring system fails a quality assurance audit or any other audit, the system is out-of-control. The owner or operator shall follow the procedures for out-of-control periods in § 75.24.

[58 FR 3701, Jan. 11, 1993, as amended at 60 FR 26527, 26566, May 17, 1995; 61 FR 25582, May 22, 1996; 61 FR 59159, Nov. 20, 1996; 64 FR 28599, May 26, 1999; 67 FR 40433, June 12, 2002; 67 FR 53505, Aug. 16, 2002; 70 FR 28679, May 18, 2005; 73 FR 4345, Jan. 24, 2008]

§ 75.22 Reference test methods.

(a) The owner or operator shall use the following methods, which are found in appendix A–4 to part 60 of this chapter or have been published by ASTM, to conduct the following tests: monitoring system tests for certification or recertification of continuous emission monitoring systems and excepted monitoring systems under appendix E to this part; the emission tests required under § 75.81(c) and (d); and required quality assurance and quality control tests:

(1) Methods 1 or 1A are the reference methods for selection of sampling site and sample traverses.

(2) Method 2 or its allowable alternatives, as provided in appendix A to part 60 of this chapter, except for Methods 2B and 2E, are the reference methods for determination of volumetric flow.

(3) Methods 3, 3A, or 3B are the reference methods for the determination of the dry molecular weight O_2 and CO_2 concentrations in the emissions.

(4) Method 4 (either the standard procedure described in section 8.1 of the method or the moisture approximation procedure described in section 8.2 of the method) shall be used to correct pollutant concentrations from a dry basis to a wet basis (or from a wet basis to a dry basis) and shall be used when relative accuracy test audits of continuous moisture monitoring systems are conducted. For the purpose of determining the stack gas molecular weight, however, the alternative wet bulb-dry bulb technique for approximating the stack gas moisture content described in section 2.2 of Method 4 may be used in lieu of the procedures in sections 8.1 and 8.2 of the method.

(5) Methods 6, 6A, 6B or 6C, and 7, 7A, 7C, 7D or 7E in appendix A–4 to part 60 of this chapter, as applicable, are the reference methods for determining SO_2 and NO_X pollutant concentrations. (Methods 6A and 6B in appendix A–4 to part 60 of this chapter may also be used to determine SO_2 emission rate in lb/mmBtu.) Methods 7, 7A, 7C, 7D, or 7E in appendix A–4 to part 60 of this chapter must be used to measure total NO_X emissions, both NO and NO_2, for purposes of this part. The owner or operator shall not use the following sections, exceptions, and options of method 7E in appendix A–4 to part 60 of this chapter:

(i) Section 7.1 of the method allowing for use of prepared calibration gas mixtures that are produced in accordance with method 205 in Appendix M of 40 CFR Part 51;

(ii) The sampling point selection procedures in section 8.1 of the method, for the emission testing of boilers and combustion turbines under appendix E to this part. The number and location of the sampling points for those applications shall be as specified in sections 2.1.2.1 and 2.1.2.2 of appendix E to this part;

(iii) Paragraph (3) in section 8.4 of the method allowing for the use of a multi-hole probe to satisfy the multipoint traverse requirement of the method;

(iv) Section 8.6 of the method allowing for the use of ''Dynamic Spiking'' as an alternative to the interference and system bias checks of the method. Dynamic spiking may be conducted

(optionally) as an additional quality assurance check.

(6) Method 3A in appendix A–2 and method 7E in appendix A–4 to part 60 of this chapter are the reference methods for determining NO_X and diluent emissions from stationary gas turbines for testing under appendix E to this part.

(7) ASTM D6784–02, Standard Test Method for Elemental, Oxidized, Particle-Bound and Total Mercury in Flue Gas Generated from Coal-Fired Stationary Sources (Ontario Hydro Method) (incorporated by reference under § 75.6 of this part) is the reference method for determining Hg concentration.

(i) Alternatively, Method 29 in appendix A–8 to part 60 of this chapter may be used, with these caveats: The procedures for preparation of Hg standards and sample analysis in sections 13.4.1.1 through 13.4.1.3 ASTM D6784–02 (incorporated by reference under § 75.6 of this part) shall be followed instead of the procedures in sections 7.5.33 and 11.1.3 of Method 29 in appendix A–8 to part 60 of this chapter, and the QA/QC procedures in section 13.4.2 of ASTM D6784–02 (incorporated by reference under § 75.6 of this part) shall be performed instead of the procedures in section 9.2.3 of Method 29 in appendix A–8 to part 60 of this chapter. The tester may also opt to use the sample recovery and preparation procedures in ASTM D6784–02 (incorporated by reference under § 75.6 of this part) instead of the Method 29 in appendix A–8 to part 60 of this chapter procedures, as follows: sections 8.2.8 and 8.2.9.1 of Method 29 in appendix A–8 to part 60 of this chapter may be replaced with sections 13.2.9.1 through 13.2.9.3 of ASTM D6784–02 (incorporated by reference under § 75.6 of this part); sections 8.2.9.2 and 8.2.9.3 of Method 29 in appendix A–8 to part 60 of this chapter may be replaced with sections 13.2.10.1 through 13.2.10.4 of ASTM D6784–02 (incorporated by reference under § 75.6 of this part); section 8.3.4 of Method 29 in appendix A–8 to part 60 of this chapter may be replaced with section 13.3.4 or 13.3.6 of ASTM D6784–02 (as appropriate) (incorporated by reference under § 75.6 of this part); and section 8.3.5 of Method 29 in appendix A–8 to part 60 of this chapter may be replaced with section 13.3.5 or 13.3.6 of ASTM D6784–02 (as appropriate) (incorporated by reference under § 75.6 of this part).

(ii) Whenever ASTM D6784–02 (incorporated by reference under § 75.6 of this part) or Method 29 in appendix A–8 to part 60 of this chapter is used, paired sampling trains are required. To validate a RATA run or an emission test run, the relative deviation (RD), calculated according to section 11.7 of appendix K to this part, must not exceed 10 percent, when the average concentration is greater than 1.0 $\mu g/m^3$. If the average concentration is ≤ 1.0 $\mu g/m^3$, the RD must not exceed 20 percent. The RD results are also acceptable if the absolute difference between the Hg concentrations measured by the paired trains does not exceed 0.03 $\mu g/m^3$. If the RD criterion is met, the run is valid. For each valid run, average the Hg concentrations measured by the two trains (vapor phase, only).

(iii) Two additional reference methods that may be used to measure Hg concentration are: Method 30A, ''Determination of Total Vapor Phase Mercury Emissions from Stationary Sources (Instrumental Analyzer Procedure)'' and Method 30B, ''Determination of Total Vapor Phase Mercury Emissions from Coal-Fired Combustion Sources Using Carbon Sorbent Traps''.

(iv) When Method 29 in appendix A–8 to part 60 of this chapter or ASTM D6784–02 (incorporated by reference under § 75.6 of this part) is used for the Hg emission testing required under §§ 75.81(c) and (d), locate the reference method test points according to section 8.1 of Method 30A, and if Hg stratification testing is part of the test protocol, follow the procedures in sections 8.1.3 through 8.1.3.5 of Method 30A.

(b) The owner or operator may use any of the following methods, which are found in appendix A to part 60 of this chapter or have been published by ASTM, as a reference method backup monitoring system to provide quality-assured monitor data:

(1) Method 3A for determining O_2 or CO_2 concentration;

(2) Method 6C for determining SO_2 concentration;

(3) Method 7E for determining total NO_X concentration (both NO and NO_2);

(4) Method 2, or its allowable alternatives, as provided in appendix A to part 60 of this chapter, except for Methods 2B and 2E, for determining volumetric flow. The sample point(s) for reference methods shall be located according to the provisions of section 6.5.5 of appendix A to this part.

(5) ASTM D6784–02, Standard Test Method for Elemental, Oxidized, Particle-Bound and Total Mercury in Flue Gas Generated from Coal-Fired Stationary Sources (Ontario Hydro Method) (incorporated by reference under § 75.6 of this part) for determining Hg concentration;

(6) Method 29 in appendix A–8 to part 60 of this chapter for determining Hg concentration;

(7) Method 30A for determining Hg concentration; and

(8) Method 30B for determining Hg concentration.

(c)(1) Instrumental EPA Reference Methods 3A, 6C, and 7E in appendices A–2 and A–4 of part 60 of this chapter shall be conducted using calibration gases as defined in section 5 of appendix A to this part. Otherwise, performance tests shall be conducted and data reduced in accordance with the test methods and procedures of this part unless the Administrator:

(i) Specifies or approves, in specific cases, the use of a reference method with minor changes in methodology;

(ii) Approves the use of an equivalent method; or

(iii) Approves shorter sampling times and smaller sample volumes when necessitated by process variables or other factors.

(2) Nothing in this paragraph shall be construed to abrogate the Administrator's authority to require testing under Section 114 of the Act.

[58 FR 3701, Jan. 11, 1993, as amended at 60 FR 26528, May 17, 1995; 64 FR 28600, May 26, 1999; 67 FR 40433, June 12, 2002; 67 FR 53505, Aug. 16, 2002; 70 FR 28679, May 18, 2005; 73 FR 4345, Jan. 24, 2008]

§ 75.23 Alternatives to standards incorporated by reference.

(a) The designated representative of a unit may petition the Administrator for an alternative to any standard incorporated by reference and prescribed in this part in accordance with § 75.66(c).

(b) [Reserved]

[60 FR 26528, May 17, 1995]

§ 75.24 Out-of-control periods and adjustment for system bias.

(a) If an out-of-control period occurs to a monitor or continuous emission monitoring system, the owner or operator shall take corrective action and repeat the tests applicable to the ''out-of-control parameter'' as described in appendix B of this part.

(1) For daily calibration error tests, an out-of-control period occurs when the calibration error of a pollutant concentration monitor exceeds the applicable specification in section 2.1.4 of appendix B to this part.

(2) For quarterly linearity checks, an out-of-control period occurs when the error in linearity at any of three gas concentrations (low, mid-range, and high) exceeds the applicable specification in appendix A to this part.

(3) For relative accuracy test audits, an out-of-control period occurs when the relative accuracy exceeds the applicable specification in appendix A to this part.

(b) When a monitor or continuous emission monitoring system is out-of-control, any data recorded by the monitor or monitoring system are not quality-assured and shall not be used in calculating monitor data availabilities pursuant to § 75.32 of this part.

(c) When a monitor or continuous emission monitoring system is out-of-control, the owner or operator shall take one of the following actions until the monitor or monitoring system has successfully met the relevant criteria in appendices A and B of this part as demonstrated by subsequent tests:

(1) Apply the procedures for missing data substitution to emissions from affected unit(s); or

(2) Use a certified backup monitoring system or a reference method for measuring and recording emissions from the affected unit(s); or

(3) Adjust the gas discharge paths from the affected unit(s) with emissions normally observed by the out-of-control monitor or monitoring system so that all exhaust gases are monitored by a certified monitor or monitoring

system meeting the requirements of appendices A and B of this part.

(d) When the bias test indicates that an SO_2 monitor, a flow monitor, a NO_X-diluent continuous emission monitoring system, a NO_X concentration monitoring system used to determine NO_X mass emissions, as defined in § 75.71(a)(2), a Hg concentration monitoring system or a sorbent trap monitoring system is biased low (*i.e.*, the arithmetic mean of the differences between the reference method value and the monitor or monitoring system measurements in a relative accuracy test audit exceed the bias statistic in section 7 of appendix A to this part), the owner or operator shall adjust the monitor or continuous emission monitoring system to eliminate the cause of bias such that it passes the bias test or calculate and use the bias adjustment factor as specified in section 2.3.4 of appendix B to this part.

(e) The owner or operator shall determine if a continuous opacity monitoring system is out-of-control and shall take appropriate corrective actions according to the procedures specified for State Implementation Plans, pursuant to appendix M of part 51 of this chapter. The owner or operator shall comply with the monitor data availability requirements of the State. If the State has no monitor data availability requirements for continuous opacity monitoring systems, then the owner or operator shall comply with the monitor data availability requirements as stated in the data capture provisions of appendix M, part 51 of this chapter.

[58 FR 3701, Jan. 11, 1993, as amended at 60 FR 26528, May 17, 1995; 64 FR 28600, May 26, 1999; 67 FR 40433, June 12, 2002; 70 FR 28680, May 18, 2005]

Subpart D—Missing Data Substitution Procedures

§ 75.30 General provisions.

(a) Except as provided in § 75.34, the owner or operator shall provide substitute data for each affected unit using a continuous emission monitoring system according to the missing data procedures in this subpart whenever the unit combusts any fuel and:

(1) A valid, quality-assured hour of SO_2 concentration data (in ppm) has not been measured and recorded for an affected unit by a certified SO_2 pollutant concentration monitor, or by an approved alternative monitoring method under subpart E of this part, except as provided in paragraph (d) of this section; or

(2) A valid, quality-assured hour of flow data (in scfh) has not been measured and recorded for an affected unit from a certified flow monitor, or by an approved alternative monitoring system under subpart E of this part; or

(3) A valid, quality-assured hour of NO_X emission rate data (in lb/mmBtu) has not been measured or recorded for an affected unit, either by a certified NO_X-diluent continuous emission monitoring system or by an approved alternative monitoring system under subpart E of this part; or

(4) A valid, quality-assured hour of CO_2 concentration data (in percent CO_2, or percent O_2 converted to percent CO_2 using the procedures in appendix F to this part) has not been measured and recorded for an affected unit, either by a certified CO_2 continuous emission monitoring system or by an approved alternative monitoring method under subpart E of this part; or

(5) A valid, quality-assured hour of NO_X concentration data (in ppm) has not been measured or recorded for an affected unit, either by a certified NO_X concentration monitoring system used to determine NO_X mass emissions, as defined in § 75.71(a)(2), or by an approved alternative monitoring system under subpart E of this part; or

(6) A valid, quality-assured hour of CO_2 or O_2 concentration data (in percent CO_2, or percent O_2) used for the determination of heat input has not been measured and recorded for an affected unit, either by a certified CO_2 or O_2 diluent monitor, or by an approved alternative monitoring method under subpart E of this part; or

(7) A valid, quality-assured hour of moisture data (in percent H_2O) has not been measured or recorded for an affected unit, either by a certified moisture monitoring system or an approved alternative monitoring method under subpart E of this part. This requirement does not apply when a default

percent moisture value, as provided in §§ 75.11(b) or 75.12(b), is used to account for the hourly moisture content of the stack gas; or

(8) A valid, quality-assured hour of heat input rate data (in mmBtu/hr) has not been measured and recorded for a unit from a certified flow monitor and a certified diluent (CO_2 or O_2) monitor or by an approved alternative monitoring system under subpart E of this part.

(b) However, the owner or operator shall have no need to provide substitute data according to the missing data procedures in this subpart if the owner or operator uses SO_2, CO_2, NO_X, or O_2 concentration, flow rate, percent moisture, or NO_X emission rate data recorded from either a certified redundant or regular non-redundant backup CEMS, a like-kind replacement non-redundant backup analyzer, or a backup reference method monitoring system when the certified primary monitor is not operating or is out-of-control. A redundant or non-redundant backup continuous emission monitoring system must have been certified according to the procedures in § 75.20 prior to the missing data period. Non-redundant backup continuous emission monitoring system must pass a linearity check (for pollutant concentration monitors) or a calibration error test (for flow monitors) prior to each period of use of the certified backup monitor for recording and reporting emissions. Use of a certified backup monitoring system or backup reference method monitoring system is optional and at the discretion of the owner or operator.

(c) When the certified primary monitor is not operating or out-of-control, then data recorded for an affected unit from a certified backup continuous emission monitor or backup reference method monitoring system are used, as if such data were from the certified primary monitor, to calculate monitor data availability in § 75.32, and to provide the quality-assured data used in the missing data procedures in §§ 75.31 and 75.33, such as the ''hour after'' value.

(d) The owner or operator shall comply with the applicable provisions of this paragraph during hours in which a unit with an SO_2 continuous emission monitoring system combusts only gaseous fuel.

(1) Whenever a unit with an SO_2 CEMS combusts only natural gas or pipeline natural gas (as defined in § 72.2 of this chapter) and the owner or operator is using the procedures in section 7 of appendix F to this part to determine SO_2 mass emissions pursuant to § 75.11(e)(1), the owner or operator shall, for purposes of reporting heat input data under § 75.57(b)(5), and for the calculation of SO_2 mass emissions using Equation F–23 in section 7 of appendix F to this part, substitute for missing data from a flow monitoring system, CO_2 diluent monitor or O_2 diluent monitor using the missing data substitution procedures in § 75.36.

(2) Whenever a unit with an SO_2 CEMS combusts gaseous fuel and the owner or operator uses the gas sampling and analysis and fuel flow procedures in appendix D to this part to determine SO_2 mass emissions pursuant to § 75.11(e)(2), the owner or operator shall substitute for missing total sulfur content, gross calorific value, and fuel flowmeter data using the missing data procedures in appendix D to this part and shall also, for purposes of reporting heat input data under § 75.54(b)(5) or § 75.57(b)(5), as applicable, substitute for missing data from a flow monitoring system, CO_2 diluent monitor, or O_2 diluent monitor using the missing data substitution procedures in § 75.36.

(3) The owner or operator of a unit with an SO_2 monitoring system shall not include hours when the unit combusts only gaseous fuel in the SO_2 data availability calculations in § 75.32 or in the calculations of substitute SO_2 data using the procedures of either § 75.31 or § 75.33, for hours when SO_2 emissions are determined in accordance with § 75.11(e)(1) or (e)(2). For the purpose of the missing data and availability procedures for SO_2 pollutant concentration monitors in §§ 75.31 and 75.33 only, all hours during which the unit combusts only gaseous fuel shall be excluded from the definition of ''monitor operating hour,'' ''quality-assured monitor operating hour,'' ''unit operating hour,'' and ''unit operating day,'' when SO_2 emissions are determined in accordance with § 75.11(e)(1) or (e)(2).

(4) During all hours in which a unit with an SO_2 continuous emission monitoring system combusts only gaseous fuel and the owner or operator uses the SO_2 monitoring system to determine SO_2 mass emissions pursuant to § 75.11(e)(3), the owner or operator shall determine the percent monitor data availability for SO_2 in accordance with § 75.32 and shall use the standard SO_2 missing data procedures of § 75.33.

[60 FR 26528, 26566, May 17, 1995, as amended at 61 FR 59160, Nov. 20, 1996; 64 FR 28600, May 26, 1999; 67 FR 40433, June 12, 2002]

§ 75.31 Initial missing data procedures.

(a) During the first 720 quality-assured monitor operating hours following initial certification of the required SO_2, CO_2, O_2, Hg concentration, or moisture monitoring system(s) at a particular unit or stack location (*i.e.*, the date and time at which quality-assured data begins to be recorded by CEMS(s) installed at that location), and during the first 2,160 quality-assured monitor operating hours following initial certification of the required NO_X-diluent, NO_X concentration, or flow monitoring system(s) at the unit or stack location, the owner or operator shall provide substitute data required under this subpart according to the procedures in paragraphs (b) and (c) of this section. The owner or operator of a unit shall use these procedures for no longer than three years (26,280 clock hours) following initial certification.

(b) SO_2, CO_2, or O_2 concentration data, Hg concentration data, and moisture data. For each hour of missing SO_2, Hg, or CO_2 emissions concentration data (including CO_2 data converted from O_2 data using the procedures in appendix F of this part), or missing O_2 or CO_2 diluent concentration data used to calculate heat input, or missing moisture data, the owner or operator shall calculate the substitute data as follows:

(1) Whenever prior quality-assured data exist, the owner or operator shall substitute, by means of the data acquisition and handling system, for each hour of missing data, the average of the hourly SO_2, CO_2, Hg, or O_2 concentrations, or moisture percentages recorded by a certified monitor for the unit operating hour immediately before and the unit operating hour immediately after the missing data period.

(2) Whenever no prior quality assured SO_2, CO_2, Hg, or O_2 concentration data, or moisture data exist, the owner or operator shall substitute, as applicable, for each hour of missing data, the maximum potential SO_2 concentration or the maximum potential CO_2 concentration or the minimum potential O_2 concentration or (unless Equation 19–3, 19–4 or 19–8 in Method 19 in appendix A to part 60 of this chapter is used to determine NO_X emission rate) the minimum potential moisture percentage, or the maximum potential Hg concentration, as specified, respectively, in sections 2.1.1.1, 2.1.3.1, 2.1.3.2, 2.1.5, and 2.1.7 of appendix A to this part. If Equation 19–3, 19–4 or 19–8 in Method 19 in appendix A to part 60 of this chapter is used to determine NO_X emission rate, substitute the maximum potential moisture percentage, as specified in section 2.1.6 of appendix A to this part.

(c) *Volumetric flow and NO_X emission rate or NO_X concentration data (load ranges or operational bins used).* The procedures in this paragraph apply to affected units for which load-based ranges or non-load-based operational bins, as defined, respectively, in sections 2 and 3 of appendix C to this part are used to provide substitute NO_X and flow rate data. For each hour of missing volumetric flow rate data, NO_X emission rate data, or NO_X concentration data used to determine NO_X mass emissions:

(1) Whenever prior quality-assured data exist in the load range (or operational bin) corresponding to the operating load (or operating conditions) at the time of the missing data period, the owner or operator shall substitute, by means of the automated data acquisition and handling system, for each hour of missing data, the arithmetic average of all of the prior quality-assured hourly flow rates, NO_X emission rates, or NO_X concentrations in the corresponding load range (or operational bin) as determined using the procedure in appendix C to this part. When non-load-based operational bins are used, if essential operating or parametric data are unavailable for any hour in the missing data period, such

that the operational bin cannot be determined, the owner or operator shall, for that hour, substitute (as applicable) the maximum potential flow rate as specified in section 2.1.4.1 of appendix A to this part or the maximum potential NO_X emission rate or the maximum potential NO_X concentration as specified in section 2.1.2.1 of appendix A to this part.

(2) This paragraph (c)(2) does not apply to non-load-based units using operational bins. Whenever no prior quality-assured flow or NO_X emission rate or NO_X concentration data exist for the corresponding load range, the owner or operator shall substitute, for each hour of missing data, the average hourly flow rate or the average hourly NO_X emission rate or NO_X concentration at the next higher level load range for which quality-assured data are available.

(3) Whenever no prior quality-assured flow rate or NO_X emission rate or NO_X concentration data exist for the corresponding load range, or any higher load range (or for non-load-based units using operational bins, when no prior quality-assured data exist in the corresponding operational bin), the owner or operator shall, as applicable, substitute, for each hour of missing data, the maximum potential flow rate as specified in section 2.1.4.1 of appendix A to this part or shall substitute the maximum potential NO_X emission rate or the maximum potential NO_X concentration, as specified in section 2.1.2.1 of appendix A to this part. Alternatively, where a unit with add-on NO_X emission controls can demonstrate that the controls are operating properly during the hour, as provided in § 75.34(d), the owner or operator may substitute, as applicable, the maximum controlled NO_X emission rate (MCR) or the maximum expected NO_X concentration (MEC).

(d) *Non-load-based volumetric flow and NO_X emission rate or NO_X concentration data (operational bins not used).* The procedures in this paragraph, (d), apply only to affected units that do not produce electrical output (in megawatts) or thermal output (in klb/hr of steam) and for which operational bins are not used. For each hour of missing volumetric flow rate data, NO_X emission rate data, or NO_X concentration data used to determine NO_X mass emissions:

(1) Whenever prior quality-assured data exist at the time of the missing data period, the owner or operator shall substitute, by means of the automated data acquisition and handling system, for each hour of missing data, the arithmetic average of all of the prior quality-assured hourly average flow rates or NO_X emission rates or NO_X concentrations.

(2) Whenever no prior quality-assured flow rate, NO_X emission rate, or NO_X concentration data exist, the owner or operator shall, as applicable, substitute for each hour of missing data, the maximum potential flow rate as specified in section 2.1.4.1 of appendix A to this part or the maximum potential NO_X emission rate or the maximum potential NO_X concentration as specified in section 2.1.2.1 of appendix A to this part.

[64 FR 28601, May 26, 1999, as amended at 67 FR 40433, June 12, 2002; 70 FR 28680, May 18, 2005; 73 FR 4346, Jan. 24, 2008]

§ 75.32 Determination of monitor data availability for standard missing data procedures.

(a) Following initial certification of the required SO_2, CO_2, O_2, or Hg concentration, or moisture monitoring system(s) at a particular unit or stack location (*i.e.*, the date and time at which quality-assured data begins to be recorded by CEMS(s) at that location), the owner or operator shall begin calculating the percent monitor data availability as described in paragraph (a)(1) of this section, and shall, upon completion of the first 720 quality-assured monitor operating hours, record, by means of the automated data acquisition and handling system, the percent monitor data availability for each monitored parameter. Similarly, following initial certification of the required NO_X-diluent, NO_X concentration, or flow monitoring system(s) at a unit or stack location, the owner or operator shall begin calculating the percent monitor data availability as described in paragraph (a)(1) of this section, and shall, upon completion of the first 2,160 quality-assured monitor operating

hours, record, by means of the automated data acquisition and handling system, the percent monitor data availability for each monitored parameter. Notwithstanding these requirements, if three years (26,280 clock hours) have elapsed since the date and hour of initial certification and fewer than 720 (or 2,160, as applicable) quality-assured monitor operating hours have been recorded, the owner or operator shall begin recording the percent monitor data availability. The percent monitor data availability shall be calculated for each monitored parameter at each unit or stack location, as follows:

(1) Prior to completion of 8,760 unit or stack operating hours following initial certification, the owner or operator shall, for the purpose of applying the standard missing data procedures of § 75.33, use Equation 8 to calculate, hourly, percent monitor data availability.

$$\text{Percent monitor data availability} = \frac{\text{Total unit operating hours for which quality-assured data were recorded since certification}}{\text{Total unit operating hours since certification}} \times 100 \qquad \text{(Eq. 8)}$$

(2) Upon completion of 8,760 unit (or stack) operating hours following initial certification and thereafter, the owner or operator shall, for the purpose of applying the standard missing data procedures of § 75.33, use Equation 9 to calculate hourly, percent monitor data availability. Notwithstanding this requirement, if three years (26,280 clock hours) have elapsed since initial certification and fewer than 8,760 unit or stack operating hours have been accumulated, the owner or operator shall begin using a modified version of Equation 9, as described in paragraph (a)(3) of this section.

$$\text{Percent monitor data availability} = \frac{\text{Total unit operating hours for which quality-assured data were recorded during previous 8,760 unit operating hours}}{8{,}760} \times 100 \qquad \text{(Eq. 9)}$$

(3) When calculating percent monitor data availability using Equation 8 or 9, the owner or operator shall include all unit operating hours, and all monitor operating hours for which quality-assured data were recorded by a certified primary monitor; a certified redundant or non-redundant backup monitor or a reference method for that unit; or by an approved alternative monitoring system under subpart E of this part. No hours from more than three years (26,280 clock hours) earlier shall be used in Equation 9. For a unit that has accumulated fewer than 8,760 unit operating hours in the previous three years (26,280 clock hours), replace the words ''during previous 8,760 unit operating hours'' in the numerator of Equation 9 with ''in the previous three years'' and replace ''8,760'' in the denominator of Equation 9 with ''total unit operating hours in the previous three years.'' The owner or operator of a unit with an SO_2 monitoring system shall, when SO_2 emissions are determined in accordance with § 75.11(e)(1) or (e)(2), exclude hours in which a unit combusts only gaseous fuel from calculations of percent monitor data availability for SO_2 pollutant concentration monitors, as provided in § 75.30(d).

(b) The monitor data availability shall be calculated for each hour during each missing data period. The owner or operator shall record the percent monitor data availability for each hour of each missing data period to implement the missing data substitution procedures.

[58 FR 3701, Jan. 11, 1993, as amended at 60 FR 26529, 26567, May 17, 1995; 61 FR 59160, Nov. 20, 1996; 64 FR 28602, May 26, 1999; 67 FR 40434, June 12, 2002; 70 FR 28680, May 18, 2005; 73 FR 4346, Jan. 24, 2008]

§ 75.33 Standard missing data procedures for SO_2, NO_X, Hg, and flow rate.

(a) Following initial certification of the required SO_2, NO_X, and flow rate monitoring system(s) at a particular unit or stack location (*i.e.*, the date and time at which quality-assured data begins to be recorded by CEMS(s) at that location) and upon completion of the first 720 quality-assured monitor operating hours (for SO_2) or the first 2,160 quality-assured monitor operating hours (for flow, NO_X emission rate, or NO_X concentration), the owner or operator shall provide substitute data required under this subpart according to the procedures in paragraphs (b) and (c) of this section and depicted in Table 1 (SO_2) and Table 2 of this section (NO_X, flow). The owner or operator may either implement the provisions of paragraphs (b) and (c) of this section on a non-fuel-specific basis, or may, as described in paragraphs (b)(5), (b)(6), (c)(7) and (c)(8) of this section, provide fuel-specific substitute data values. Notwithstanding these requirements, if three years (26,280 clock hours) have elapsed since the date and hour of initial certification, and fewer than 720 (or 2,160, as applicable) quality-assured monitor operating hours have been recorded, the owner or operator shall begin using the missing data procedures of this section. The owner or operator of a unit shall substitute for missing data using quality-assured monitor operating hours of data from no earlier than three years (26,280 clock hours) prior to the date and time of the missing data period.

(b) *SO_2 concentration data.* For each hour of missing SO_2 concentration data,

(1) If the monitor data availability is equal to or greater than 95.0 percent, the owner or operator shall calculate substitute data by means of the automated data acquisition and handling system for that hour of the missing data period according to the following procedures:

(i) For a missing data period less than or equal to 24 hours, substitute the average of the hourly SO_2 concentrations recorded by an SO_2 pollutant concentration monitor for the hour before and the hour after the missing data period.

(ii) For a missing data period greater than 24 hours, substitute the greater of:

(A) The 90th percentile hourly SO_2 concentration recorded by an SO_2 pollutant concentration monitor during the previous 720 quality-assured monitor operating hours; or

(B) The average of the hourly SO_2 concentrations recorded by an SO_2 pollutant concentration monitor for the hour before and the hour after the missing data period.

(2) If the monitor data availability is at least 90.0 percent but less than 95.0 percent, the owner or operator shall calculate substitute data by means of the automated data acquisition and handling system for that hour of the missing data period according to the following procedures:

(i) For a missing data period of less than or equal to 8 hours, substitute the average of the hourly SO_2 concentrations recorded by an SO_2 pollutant concentration monitor for the hour before and the hour after the missing data period.

(ii) For a missing data period of more than 8 hours, substitute the greater of:

(A) the 95th percentile hourly SO_2 concentration recorded by an SO_2 pollutant concentration monitor during the previous 720 quality-assured monitor operating hours; or

(B) The average of the hourly SO_2 concentrations recorded by an SO_2 pollutant concentration monitor for the hour before and the hour after the missing data period.

(3) If the monitor data availability is at least 80.0 percent but less than 90.0 percent, the owner or operator shall substitute for that hour of the missing

data period the maximum hourly SO_2 concentration recorded by an SO_2 pollutant concentration monitor during the previous 720 quality-assured monitor operating hours.

(4) If the monitor data availability is less than 80.0 percent, the owner or operator shall substitute for that hour of the missing data period the maximum potential SO_2 concentration, as defined in section 2.1.1.1 of appendix A to this part.

(5) For units that combust more than one type of fuel, the owner or operator may opt to implement the missing data routines in paragraphs (b)(1) through (b)(4) of this section on a fuel-specific basis. If this option is selected, the owner or operator shall document this in the monitoring plan required under § 75.53.

(6) Use the following guidelines to implement paragraphs (b)(1) through (b)(4) of this section on a fuel-specific basis:

(i) Separate the historical, quality-assured SO_2 concentration data according to the type of fuel combusted;

(ii) For units that co-fire different types of fuel, either group the co-fired hours with the historical data for the fuel with the highest SO_2 emission rate (e.g., if diesel oil and pipeline natural gas are co-fired, count co-fired hours as oil-burning hours), or separate the co-fired hours from the single-fuel hours;

(iii) For the purposes of providing substitute data under paragraph (b)(4) of this section, determine a separate, fuel-specific maximum potential SO_2 concentration (MPC) value for each type of fuel combusted in the unit, in a manner consistent with section 2.1.1.1 of appendix A to this part. For fuel that qualifies as pipeline natural gas or natural gas (as defined in § 72.2 of this chapter), the owner or operator shall, for the purposes of determining the MPC, either determine the maximum total sulfur content and minimum gross calorific value (GCV) of the gas by fuel sampling and analysis or shall use a default total sulfur content of 0.05 percent by weight (dry basis) and a default GCV value of 950 Btu/scf. For co-firing, the MPC value shall be based on the fuel with the highest SO_2 emission rate. The exact methodology used to determine each fuel-specific MPC value shall be documented in the monitoring plan for the unit or stack; and

(iv) For missing data periods that require 720-hour (or, if applicable, 3-year) lookbacks, use historical data for the type of fuel combusted during each hour of the missing data period to determine the appropriate substitute data value for that hour. For co-fired missing data hours, if the historical data are separated into single-fuel and co-fired hours, use co-fired data to provide the substitute data values. Otherwise, use data for the fuel with the highest SO_2 emission rate to provide substitute data values for co-fired missing data hours.

(7) Table 1 summarizes the provisions of paragraphs (b)(1) through (b)(6) of this section.

(c) *Volumetric flow rate, NO_X emission rate and NO_X concentration data.* Use the procedures in this paragraph to provide substitute NO_X and flow rate data for all affected units for which load-based ranges have been defined in accordance with section 2 of appendix C to this part. For units that do not produce electrical or thermal output (*i.e.*, non-load-based units), use the procedures in this paragraph only to provide substitute data for volumetric flow rate, and only if operational bins have been defined for the unit, as described in section 3 of appendix C to this part. Otherwise, use the applicable missing data procedures in paragraph (d) or (e) of this section for non-load-based units. For each hour of missing volumetric flow rate data, NO_X emission rate data, or NO_X concentration data used to determine NO_X mass emissions:

(1) If the monitor data availability is equal to or greater than 95.0 percent, the owner or operator shall calculate substitute data by means of the automated data acquisition and handling system for that hour of the missing data period according to the following procedures:

(i) For a missing data period less than or equal to 24 hours, substitute, as applicable, for each missing hour, the arithmetic average of the flow rates or NO_X emission rates or NO_X concentrations recorded by a monitoring system during the previous 2,160 quality-assured monitor operating hours at the

corresponding unit load range or operational bin, as determined using the procedure in appendix C to this part.

(ii) For a missing data period greater than 24 hours, substitute, as applicable, for each missing hour, the greater of:

(A) The 90th percentile hourly flow rate or the 90th percentile NO_X emission rate or the 90th percentile NO_X concentration recorded by a monitoring system during the previous 2,160 quality-assured monitor operating hours at the corresponding unit load range or operational bin, as determined using the procedure in appendix C to this part; or

(B) The average of the recorded hourly flow rates, NO_X emission rates or NO_X concentrations recorded by a monitoring system for the hour before and the hour after the missing data period.

(2) If the monitor data availability is at least 90.0 percent but less than 95.0 percent, the owner or operator shall calculate substitute data by means of the automated data acquisition and handling system for that hour of the missing data period according to the following procedures:

(i) For a missing data period of less than or equal to 8 hours, substitute, as applicable, the arithmetic average hourly flow rate or NO_X emission rate or NO_X concentration recorded by a monitoring system during the previous 2,160 quality-assured monitor operating hours at the corresponding unit load range or operational bin, as determined using the procedure in appendix C to this part.

(ii) For a missing data period greater than 8 hours, substitute, as applicable, for each missing hour, the greater of:

(A) The 95th percentile hourly flow rate or the 95th percentile NO_X emission rate or the 95th percentile NO_X concentration recorded by a monitoring system during the previous 2,160 quality-assured monitor operating hours at the corresponding unit load range or operational bin, as determined using the procedure in appendix C to this part; or

(B) The average of the hourly flow rates, NO_X emission rates or NO_X concentrations recorded by a monitoring system for the hour before and the hour after the missing data period.

(3) If the monitor data availability is at least 80.0 percent but less than 90.0 percent, the owner or operator shall, by means of the automated data acquisition and handling system, substitute, as applicable, for that hour of the missing data period, the maximum hourly flow rate or the maximum hourly NO_X emission rate or the maximum hourly NO_X concentration recorded during the previous 2,160 quality-assured monitor operating hours at the corresponding unit load range or operational bin, as determined using the procedure in appendix C to this part.

(4) If the monitor data availability is less than 80.0 percent, the owner or operator shall substitute, as applicable, for that hour of the missing data period, the maximum potential flow rate, as defined in section 2.1.4.1 of appendix A to this part, or the maximum NO_X emission rate, as defined in section 2.1.2.1 of appendix A to this part, or the maximum potential NO_X concentration, as defined in section 2.1.2.1 of appendix A to this part. In addition, when non-load-based operational bins are used, the owner or operator shall substitute the maximum potential flow rate for any hour in the missing data period in which essential operating or parametric data are unavailable and the operational bin cannot be determined.

(5) This paragraph, (c)(5), does not apply to non-load-based, affected units using operational bins. Whenever no prior quality-assured flow rate data, NO_X concentration data or NO_X emission rate data exist for the corresponding load range, the owner or operator shall substitute, as applicable, for each hour of missing data, the maximum hourly flow rate or the maximum hourly NO_X concentration or maximum hourly NO_X emission rate at the next higher level load range for which quality-assured data are available.

(6) Whenever no prior quality-assured flow rate data, NO_X concentration data or NO_X emission rate data exist at either the corresponding load range (or a higher load range) or at the corresponding operational bin, the owner or operator shall substitute, as applicable, either the maximum potential NO_X

emission rate or the maximum potential NO_X concentration, as defined in section 2.1.2.1 of appendix A to this part or the maximum potential flow rate, as defined in section 2.1.4.1 of appendix A to this part.

(7) This paragraph (c)(7) does not apply to affected units using non-load-based operational bins. For units that combust more than one type of fuel, the owner or operator may opt to implement the missing data routines in paragraphs (c)(1) through (c)(6) of this section on a fuel-specific basis. If this option is selected, the owner or operator shall document this in the monitoring plan required under § 75.53.

(8) This paragraph, (c)(8), does not apply to affected units using non-load-based operational bins. Use the following guidelines to implement paragraphs (c)(1) through (c)(6) of this section on a fuel-specific basis:

(i) Separate the historical, quality-assured NO_X emission rate, NO_X concentration, or flow rate data according to the type of fuel combusted;

(ii) For units that co-fire different types of fuel, either group the co-fired hours with the historical data for the fuel with the highest NO_X emission rate, NO_X concentration or flow rate, or separate the co-fired hours from the single-fuel hours;

(iii) For the purposes of providing substitute data under paragraph (c)(4) of this section, a separate, fuel-specific maximum potential concentration (MPC), maximum potential NO_X emission rate (MER), or maximum potential flow rate (MPF) value (as applicable) shall be determined for each type of fuel combusted in the unit, in a manner consistent with § 72.2 of this chapter and with section 2.1.2.1 or 2.1.4.1 of appendix A to this part. For co-firing, the MPC, MER or MPF value shall be based on the fuel with the highest emission rate or flow rate (as applicable). Furthermore, for a unit with add-on NO_X emission controls, a separate fuel-specific maximum controlled NO_X emission rate (MCR) or maximum expected NO_X concentration (MEC) value (as applicable) shall be determined for each type of fuel combusted in the unit. The exact methodology used to determine each fuel-specific MPC, MER, MEC, MCR or MPF value shall be documented in the monitoring plan for the unit or stack.

(iv) For missing data periods that require 2,160-hour (or, if applicable, 3-year) lookbacks, use historical data for the type of fuel combusted during each hour of the missing data period to determine the appropriate substitute data value for that hour. For co-fired missing data hours, if the historical data are separated into single-fuel and co-fired hours, use co-fired data to provide the substitute data values. Otherwise, use data for the fuel with the highest NO_X emission rate, NO_X concentration or flow rate (as applicable) to provide substitute data values for co-fired missing data hours. Tables 1 and 2 follow.

TABLE 1—MISSING DATA PROCEDURE FOR SO_2 CEMS, CO_2 CEMS, MOISTURE CEMS, HG CEMS, AND DILUENT (CO_2 OR O_2) MONITORS FOR HEAT INPUT DETERMINATION

Trigger conditions		Calculation routines	
Monitor data availability (percent)	Duration (N) of CEMS outage (hours)[2]	Method	Lookback period
95 or more (90 or more for Hg)	N ≤ 24	Average	HB/HA.
	N > 24	For SO_2, CO_2, Hg, and H_2O**, the greater of:	
		Average	HB/HA.
		90th percentile	720 hours.*
		For O_2 and H_2O^X, the lesser of:	
		10th percentile	HB/HA.
			720 hours.*
90 or more, but below 95 (> 80 but < 90 for Hg).	N ≤ 8	Average	HB/HA.
	N > 8	For SO_2, CO_2, Hg, and H_2O**, the greater of:	
		Average	HB/HA.
		95th percentile	720 hours.*
		For O_2 and H_2O^X, the lesser of:	
		Average	HB/HA.
		5th Percentile	720 hours.*

TABLE 1—MISSING DATA PROCEDURE FOR SO_2 CEMS, CO_2 CEMS, MOISTURE CEMS, HG CEMS, AND DILUENT (CO_2 OR O_2) MONITORS FOR HEAT INPUT DETERMINATION—Continued

Trigger conditions		Calculation routines	
Monitor data availability (percent)	Duration (N) of CEMS outage (hours)[2]	Method	Lookback period
80 or more, but below 90 (> 70 but < 80 for Hg).	N > 0	For SO_2, CO_2, Hg, and H_2O:**	
		Maximum value[1]	720 hours.*
		For O_2 and H_2O^X:	
		Minimum value[1]	720 hours.*
Below 80 (Below 70 for Hg)	N > 0	Maximum potential concentration[3] or % (for SO_2, CO_2, Hg, and H_2O**) *or*	
		Minimum potential concentration or % (for O_2 and H_2O^X).	None.

HB/HA = hour before and hour after the CEMS outage.

*Quality-assured, monitor operating hours, during unit operation. May be either fuel-specific or non-fuel-specific. For units that report data only for the ozone season, include only quality assured monitor operating hours within the ozone season in the lookback period. Use data from no earlier than 3 years prior to the missing data period.

[1] Where a unit with add-on SO_2 or Hg emission controls can demonstrate that the controls are operating properly during the missing data period, as provided in § 75.34, the unit may use the maximum controlled concentration from the previous 720 quality-assured monitor operating hours.

[2] During unit operating hours.

[3] Alternatively, where a unit with add-on SO_2 or Hg emission controls can demonstrate that the controls are operating properly during the missing data period, as provided in § 75.34, the unit may report the greater of: (a) the maximum expected SO_2 or Hg concentration or (b) 1.25 times the maximum controlled value from the previous 720 quality-assured monitor operating hours.

[X] Use this algorithm for moisture except when Equation 19–3, 19–4 or 19–8 in Method 19 in appendix A–7 to part 60 of this chapter is used for NO_X emission rate.

** Use this algorithm for moisture *only* when Equation 19–3, 19–4 or 19–8 in Method 19 in appendix A–7 to part 60 of this chapter is used for NO_X emission rate.

TABLE 2—LOAD-BASED MISSING DATA PROCEDURE FOR NO_X-DILUENT CEMS, NO_X CONCENTRATION CEMS AND FLOW RATE CEMS

Trigger conditions		Calculation routines		
Monitor data availability (percent)	Duration (N) of CEMS outage (hours)[2]	Method	Lookback period	Load ranges
95 or more	N ≤ 24	Average	2,160 hours*	Yes.
	N > 24	The greater of:		
		Average	HB/HA	No.
		90th percentile	2,160 hours*	Yes.
90 or more, but below 95	N ≤ 8	Average	2,160 hours*	Yes.
	N > 8	The greater of:		
		Average	HB/HA	No.
		95th percentile	2,160 hours*	Yes.
80 or more, but below 90	N > 0	Maximum value[1]	2,160 hours*	Yes.
Below 80	N > 0	Maximum potential NO_X emission rate[3]; or maximum potential NO_X concentration[3]; or maximum potential flow rate.	None	No.

HB/HA = hour before and hour after the CEMS outage.

*Quality-assured, monitor operating hours, using data at the corresponding load range (''load bin'') for each hour of the missing data period. May be either fuel-specific or non-fuel-specific. For units that report data only for the ozone season, include only quality assured monitor operating hours within the ozone season in the lookback period. Use data from no earlier than three years prior to the missing data period.

[1] Where a unit with add-on NO_X emission controls can demonstrate that the controls are operating properly during the missing data period, as provided in § 75.34, the unit may use the maximum controlled NO_X concentration or emission rate from the previous 2,160 quality-assured monitor operating hours. Units with add-on controls that report NO_X mass emissions on a year-round basis under subpart H of this part may use separate ozone season and non-ozone season data pools to provide substitute data values, as described in § 75.34(a)(2).

[2] During unit operating hours.

[3] Alternatively, where a unit with add-on NO_X emission controls can demonstrate that the controls are operating properly during the missing data period, as provided in § 75.34, the unit may report the greater of: (a) the maximum expected NO_X concentration (or maximum controlled NO_X emission rate, as applicable); or (b) 1.25 times the maximum controlled value at the corresponding load bin, from the previous 2,160 quality-assured monitor operating hours.

(9) The load-based provisions of paragraphs (c)(1) through (c)(8) of this section are summarized in Table 2 of this section. The non-load-based provisions for volumetric flow rate, found in paragraphs (c)(1) through (c)(4), and (c)(6) of this section, are presented in Table 4 of this section.

(d) *Non-load-based* NO_X emission rate and NO_X *concentration data.* Use the procedures in this paragraph to provide substitute NO_X data for affected units that do not produce electrical output (in megawatts) or thermal output (in klb/hr of steam). For each hour of missing NO_X emission rate data, or NO_X concentration data used to determine NO_X mass emissions:

(1) If the monitor data availability is equal to or greater than 95.0 percent, the owner or operator shall calculate substitute data by means of the automated data acquisition and handling system for that hour of the missing data period according to the following procedures:

(i) For a missing data period less than or equal to 24 hours, substitute, as applicable, for each missing hour, the arithmetic average of the NO_X emission rates or NO_X concentrations recorded by a monitoring system in a 2,160 hour lookback period. The lookback period may be comprised of either:

(A) The previous 2,160 quality-assured monitor operating hours, or

(B) The previous 2,160 quality-assured monitor operating hours at the corresponding operational bin, if operational bins, as defined in section 3 of appendix C to this part, are used.

(ii) For a missing data period greater than 24 hours, substitute, for each missing hour, the 90th percentile NO_X emission rate or the 90th percentile NO_X concentration recorded by a monitoring system during the previous 2,160 quality-assured monitor operating hours (or during the previous 2,160 quality-assured monitor operating hours at the corresponding operational bin, if operational bins are used).

(2) If the monitor data availability is at least 90.0 percent but less than 95.0 percent, the owner or operator shall calculate substitute data by means of the automated data acquisition and handling system for that hour of the missing data period according to the following procedures:

(i) For a missing data period of less than or equal to eight hours, substitute, as applicable, the arithmetic average of the hourly NO_X emission rates or NO_X concentrations recorded by a monitoring system during the previous 2,160 quality-assured monitor operating hours (or during the previous 2,160 quality-assured monitor operating hours at the corresponding operational bin, if operational bins are used).

(ii) For a missing data period greater than eight hours, substitute, for each missing hour, the 95th percentile hourly flow rate or the 95th percentile NO_X emission rate or the 95th percentile NO_X concentration recorded by a monitoring system during the previous 2,160 quality-assured monitor operating hours (or during the previous 2,160 quality-assured monitor operating hours at the corresponding operational bin, if operational bins are used).

(3) If the monitor data availability is at least 80.0 percent but less than 90.0 percent, the owner or operator shall, by means of the automated data acquisition and handling system, substitute, as applicable, for that hour of the missing data period, the maximum hourly NO_X emission rate or the maximum hourly NO_X concentration recorded during the previous 2,160 quality-assured monitor operating hours (or during the previous 2,160 quality-assured monitor operating hours at the corresponding operational bin, if operational bins are used).

(4) If the monitor data availability is less than 80.0 percent, the owner or operator shall substitute, as applicable, for that hour of the missing data period, the maximum NO_X emission rate, as defined in § 72.2 of this chapter, or the maximum potential NO_X concentration, as defined in section 2.1.2.1 of appendix A to this part. In addition, when operational bins are used, the owner or operator shall substitute (as applicable) the maximum potential NO_X emission rate or the maximum potential NO_X concentration for any hour in the missing data period in which essential operating or parametric data are unavailable and the operational bin cannot be determined.

(5) If operational bins are used and no prior quality-assured NO_X concentration data or NO_X emission rate data exist for the corresponding operational bin, the owner or operator shall substitute, as applicable, either the maximum potential NO_X emission rate, as defined in § 72.2 of this chapter, or the

maximum potential NO_X concentration, as defined in section 2.1.2.1 of appendix A to this part.

(6) Table 3 of this section summarizes the provisions of paragraphs (d)(1) through (d)(5) of this section.

(e) *Non-load-based volumetric flow rate data.* (1) If operational bins, as defined in section 3 of appendix C to this part, are used for a unit that does not produce electrical or thermal output, use the missing data procedures in paragraph (c) of this section to provide substitute volumetric flow rate data for the unit.

(2) If operational bins are not used, modify the procedures in paragraph (c) of this section as follows:

(i) In paragraphs (c)(1) through (c)(3), the words ''previous 2,160 quality-assured monitor operating hours'' shall apply rather than ''previous 2,160 quality-assured monitor operating hours at the corresponding unit load range or operational bin, as determined using the procedure in appendix C to this part;''

(ii) The last sentence in paragraph (c)(4) does not apply;

(iii) Paragraphs (c)(5), (c)(7), and (c)(8) are not applicable; and

(iv) In paragraph (c)(6), the words, ''for either the corresponding load range (or a higher load range) or at the corresponding operational bin'' do not apply.

(3) Table 4 of this section summarizes the provisions of paragraphs (e)(1) and (e)(2) of this section. Tables 3 and 4 follow:

TABLE 3—NON-LOAD-BASED MISSING DATA PROCEDURE FOR NO_X-DILUENT CEMS AND NO_X CONCENTRATION CEMS

Trigger conditions		Calculation routines	
Monitor data availability (percent)	Duration (N) of CEMS outage (hours) [1]	Method	Lookback period
95 or more	N ≤ 24	Average	2,160 hours.*
	N > 24	90th percentile	2,160 hours.*
90 or more, but below 95	N ≤ 8	Average	2,160 hours.*
	N > 8	95th percentile	2,160 hours.*
80 or more, but below 90	N > 0	Maximum value [3]	2,160 hours.*
Below 80, or operational bin indeterminable.	N > 0	Maximum potential NO_X emission rate [2] or maximum potential NO_X concentration [2].	None.

*If operational bins are used, the lookback period is 2,160 quality-assured, monitor operating hours, and data at the corresponding operational bin are used to provide substitute data values. If operational bins are not used, the lookback period is the previous 2,160 quality-assured monitor operating hours. For units that report data only for the ozone season, include only quality-assured monitor operating hours within the ozone season in the lookback period. Use data from no earlier than three years prior to the missing data period.

[1] During unit operation.

[2] Alternatively, where a unit with add-on NO_X emission controls can demonstrate that the controls are operating properly, as provided in § 75.34, the unit may report the greater of: (a) the maximum expected NO_X concentration, (or maximum controlled NO_X emission rate, as applicable); or (b) 1.25 times the maximum controlled value at the corresponding operational bin (if applicable), from the previous 2,160 quality-assured monitor operating hours.

[3] Where a unit with add-on NO_X emission controls can demonstrate that the controls are operating properly during the missing data period, as provided in § 75.34, the unit may use the maximum controlled NO_X concentration or emission rate from the previous 2,160 quality-assured monitor operating hours. Units with add-on controls that report NO_X mass emissions on a year-round basis under subpart H of this part may use separate ozone season and non-ozone season data pools to provide substitute data values, as described in § 75.34(a)(2).

TABLE 4—NON-LOAD-BASED MISSING DATA PROCEDURE FOR FLOW RATE CEMS

Trigger conditions		Calculation routines	
Monitor data availability (percent)	Duration (N) of CEMS outage (hours) [1]	Method	Lookback period
95 or more	N ≤ 24	Average	2160 hours*
	N > 24	The greater of:	
		Average	HB/HA
		90th percentile	2160 hours*
90 or more, but below 95	N ≤ 8	Average	2160 hours*

TABLE 4—NON-LOAD-BASED MISSING DATA PROCEDURE FOR FLOW RATE CEMS—Continued

Trigger conditions		Calculation routines	
Monitor data availability (percent)	Duration (N) of CEMS outage (hours) [1]	Method	Lookback period
	N > 8	The greater of:	
		Average	
		95th percentile	
		HB/HA	
		2160 hours*.	
80 or more, but below 90	N > 0	Maximum value	2160 hours*
Below 80, or operational bin indeterminable.	N > 0	Maximum potential flow rate	None

* If operational bins are used, the lookback period is the previous 2,160 quality-assured, monitor operating hours and data at the corresponding operational bin are used to provide substitute data values. If operational bins are not used, the lookback period is the previous 2,160 quality-assured, monitor operating hours. For units that report data only for the ozone season, include only quality-assured monitor operating hours within the ozone season in the lookback period. Use data from no earlier than three years prior to the missing data period.

[1] During unit operation.

[58 FR 3701, Jan. 11, 1993, as amended at 60 FR 26529, May 17, 1995; 61 FR 25582, May 22, 1996; 64 FR 28602, May 26, 1999; 67 FR 40434, June 12, 2002; 67 FR 53505, Aug. 16, 2002; 67 FR 57274, Sept. 9, 2002; 70 FR 28680, May 18, 2005; 73 FR 4346, Jan. 24, 2008]

§ 75.34 Units with add-on emission controls.

(a) The owner or operator of an affected unit equipped with add-on SO_2 and/or NO_X emission controls shall provide substitute data in accordance with paragraphs (a)(1), through (a)(5) of this section for each hour in which quality-assured data from the outlet SO_2 and/or NO_X monitoring system(s) are not obtained.

(1) The owner or operator may use the missing data substitution procedures specified in §§ 75.31 through 75.33 to provide substitute data for any missing data hour(s) in which the add-on emission controls are documented to be operating properly, as described in the quality assurance/quality control program for the unit, required by section 1 in appendix B of this part. To provide the necessary documentation, the owner or operator shall, for each missing data period, record parametric data to verify the proper operation of the SO_2 or NO_X add-on emission controls during each hour, as described in paragraph (d) of this section. For any missing data hour(s) in which such parametric data are either not provided or, if provided, do not demonstrate that proper operation of the SO_2 or NO_X add-on emission controls has been maintained, the owner or operator shall substitute (as applicable) the maximum potential NO_X concentration (MPC) as defined in section 2.1.2.1 of appendix A to this part, the maximum potential NO_X emission rate, as defined in § 72.2 of this chapter, or the maximum potential concentration for SO_2, as defined by section 2.1.1.1. Alternatively, for SO_2 or NO_X, the owner or operator may substitute, if available, the hourly SO_2 or NO_X concentration recorded by a certified inlet monitor, in lieu of the MPC. For each hour in which data from an inlet monitor are reported, the owner or operator shall use a method of determination code (MODC) of ''22'' (see Table 4a in § 75.57). In addition, under § 75.64(c), the designated representative shall submit as part of each electronic quarterly report, a certification statement, verifying the proper operation of the SO_2 or NO_X add-on emission control for each missing data period in which the missing data procedures of §§ 75.31 through 75.33 were applied; or

(2) This paragraph, (a)(2), applies only to a unit which, as provided in § 75.74(a) or § 75.74(b)(1), reports NO_X mass emissions on a year-round basis under a state or Federal NO_X mass emissions reduction program that adopts the emissions monitoring provisions of this part. If the add-on NO_X emission controls installed on such a unit are operated only during the ozone season or are operated in a more efficient manner during the ozone season

than outside the ozone season, the owner or operator may implement the missing data provisions of paragraph (a)(1) of this section in the following alternative manner:

(i) The historical, quality-assured NO_X emission rate or NO_X concentration data may be separated into two categories, i.e., data recorded inside the ozone season and data recorded outside the ozone season;

(ii) For the purposes of the missing data lookback periods described under §§75.33(c)(1), (c)(2) , (c)(3) and (c)(5) of this section, and §75.38(c), the substitute data values shall be taken from the appropriate database, depending on the date(s) and hour(s) of the missing data period. That is, if the missing data period occurs inside the ozone season, the ozone season data shall be used to provide substitute data. If the missing data period occurs outside the ozone season, data from outside the ozone season shall be used to provide substitute data.

(iii) A missing data period that begins outside the ozone season and continues into the ozone season shall be considered to be two separate missing data periods, one ending on April 30, hour 23, and the other beginning on May 1, hour 00;

(iv) For missing data hours outside the ozone season, the procedures of §75.33 may be applied unconditionally, i.e., documentation of the operational status of the emission controls is not required in order to apply the standard missing data routines.

(3) For each missing data hour in which the percent monitor data availability for SO_2 or NO_X, calculated in accordance with §75.32, is less than 90.0 percent and is greater than or equal to 80.0 percent; and parametric data establishes that the add-on emission controls were operating properly (*i.e.* within the range of operating parameters provided in the quality assurance/quality control program) during the hour, the owner or operator may:

(i) Replace the maximum SO_2 concentration recorded in the 720 quality-assured monitor operating hours immediately preceding the missing data period, with the maximum controlled SO2 concentration recorded in the previous 720 quality-assured monitor operating hours; or

(ii) Replace the maximum NO_X concentration(s) or NO_X emission rate(s) from the appropriate load bin(s) (based on a lookback through the 2,160 quality-assured monitor operating hours immediately preceding the missing data period), with the maximum controlled NO_X concentration(s) or emission rate(s) from the appropriate load bin(s) in the same 2,160 quality-assured monitor operating hour lookback period.

(4) The designated representative may petition the Administrator under §75.66 for approval of site-specific parametric monitoring procedure(s) for calculating substitute data for missing SO_2 pollutant concentration, NO_X pollutant concentration, and NO_X emission rate data in accordance with the requirements of paragraphs (b) and (c) of this section and appendix C to this part. The owner or operator shall record the data required in appendix C to this part, pursuant to §75.58(b).

(5) For each missing data hour in which the percent monitor data availability for SO_2 or NO_X, calculated in accordance with §75.32, is below 80.0 percent and parametric data establish that the add-on emission controls were operating properly (*i.e.* within the range of operating parameters provided in the quality assurance/quality control program),in lieu of reporting the maximum potential value, the owner or operator may substitute, as applicable, the greater of:

(i) The maximum expected SO_2 concentration or 1.25 times the maximum hourly controlled SO_2 concentration recorded in the previous 720 quality-assured monitor operating hours;

(ii) The maximum expected NO_X concentration or 1.25 times the maximum hourly controlled NO_X concentration recorded in the previous 2,160 quality-assured monitor operating hours at the corresponding unit load range or operational bin;

(iii) The maximum controlled hourly NO_X emission rate (MCR) or 1.25 times the maximum hourly controlled NO_X emission rate recorded in the previous 2,160 quality-assured monitor operating hours at the corresponding unit load range or operational bin;

(iv) For the purposes of implementing the missing data options in paragraphs (a)(5)(i) through (a)(5)(iii) of this section, the maximum expected SO_2 and NO_X concentrations shall be determined, respectively, according to sections 2.1.1.2 and 2.1.2.2 of appendix A to this part. The MCR shall be calculated according to the basic procedure described in section 2.1.2.1(b) of appendix A to this part, except that the words ''maximum potential NO_X emission rate (MER)'' shall be replaced with the words ''maximum controlled NO_X emission rate (MCR)'' and the NO_X MEC shall be used instead of the NO_X MPC.

(b) For an affected unit equipped with add-on SO_2 emission controls, the designated representative may petition the Administrator to approve a parametric monitoring procedure, as described in appendix C of this part, for calculating substitute SO_2 concentration data for missing data periods. The owner or operator shall use the procedures in §§75.31, 75.33, or 75.34(a) for providing substitute data for missing SO_2 concentration data unless a parametric monitoring procedure has been approved by the Administrator.

(1) Where the monitor data availability is 90.0 percent or more for an outlet SO_2 pollutant concentration monitor, the owner or operator may calculate substitute data using an approved parametric monitoring procedure.

(2) Where the monitor data availability for an outlet SO_2 pollutant concentration monitor is less than 90.0 percent, the owner or operator shall calculate substitute data using the procedures in §75.34(a) (1) or (2), even if the Administrator has approved a parametric monitoring procedure.

(c) For an affected unit with NO_X add-on emission controls, the designated representative may petition the Administrator to approve a parametric monitoring procedure, as described in appendix C of this part, in order to calculate substitute NO_X emission rate data for missing data periods. The owner or operator shall use the procedures in §75.31 or 75.33 for providing substitute data for missing NO_X emission rate data prior to receiving the Administrator's approval for a parametric monitoring procedure.

(1) Where monitor data availability for a NO_X continuous emission monitoring system is 90.0 percent or more, the owner or operator may calculate substitute data using an approved parametric monitoring procedure.

(2) Where monitor data availability for a NO_X continuous emission monitoring system is less than 90.0 percent, the owner or operator shall calculate substitute data using the procedure in §75.34(a) (1) or (2), even if the Administrator has approved a parametric monitoring procedure.

(d) In order to implement the options in paragraphs (a)(1), (a)(3) and (a)(5) of this section; and §§75.31(c)(3), 75.38(c), and 75.72(c)(3), the owner or operator shall keep records of information as described in §75.58(b)(3) to verify the proper operation of all add-on SO_2 or NO_X emission controls, during all periods of SO_2 or NO_X emission missing data. If the owner or operator elects to implement the missing data option in paragraph (a)(2) of this section, the records in §75.58(b)(3) are required to be kept only for the ozone season. The owner or operator shall document in the quality assurance/quality control (QA/QC) program required by section 1 of appendix B to this part, the parameters monitored and (as applicable) the ranges and combinations of parameters that indicate proper operation of the controls. The owner or operator shall provide the information recorded under §75.58(b)(3) and the related QA/QC program information to the Administrator, to the EPA Regional Office, or to the appropriate State or local agency, upon request.

[60 FR 26567, May 17, 1995, as amended at 61 FR 59160, Nov. 20, 1996; 64 FR 28604, May 26, 1999; 67 FR 40438, June 12, 2002; 73 FR 4348, Jan. 24, 2008]

§ 75.35 Missing data procedures for CO_2.

(a) The owner or operator of a unit with a CO_2 continuous emission monitoring system for determining CO_2 mass emissions in accordance with §75.10 (or an O_2 monitor that is used to determine CO_2 concentration in accordance with appendix F to this part) shall substitute for missing CO_2 pollutant

concentration data using the procedures of paragraphs (b) and (d) of this section.

(b) During the first 720 quality-assured monitor operating hours following initial certification at a particular unit or stack location (*i.e.*, the date and time at which quality-assured data begins to be recorded by a CEMS at that location), or (when implementing these procedures for a previously certified CO_2 monitoring system) during the 720 quality-assured monitor operating hours preceding implementation of the standard missing data procedures in paragraph (d) of this section, the owner or operator shall provide substitute CO_2 pollutant concentration data or substitute CO_2 data for heat input determination, as applicable, according to the procedures in § 75.31(b).

(c) [Reserved]

(d) Upon completion of 720 quality-assured monitor operating hours using the initial missing data procedures of § 75.31(b), the owner or operator shall provide substitute data for CO_2 concentration or substitute CO_2 data for heat input determination, as applicable, in accordance with the procedures in § 75.33(b) except that the term ''CO_2 concentration'' shall apply rather than ''SO_2 concentration,'' the term ''CO_2 pollutant concentration monitor'' or ''CO_2 diluent monitor'' shall apply rather than ''SO_2 pollutant concentration monitor,'' and the term ''maximum potential CO_2 concentration, as defined in section 2.1.3.1 of appendix A to this part'' shall apply, rather than ''maximum potential SO_2 concentration.''

[67 FR 40439, June 12, 2002]

§ 75.36 Missing data procedures for heat input rate determinations.

(a) When hourly heat input rate is determined using a flow monitoring system and a diluent gas (O_2 or CO_2) monitor, substitute data must be provided to calculate the heat input whenever quality-assured data are unavailable from the flow monitor, the diluent gas monitor, or both. When flow rate data are unavailable, substitute flow rate data for the heat input rate calculation shall be provided according to § 75.31 or § 75.33, as applicable. When diluent gas data are unavailable, the owner or operator shall provide substitute O_2 or CO_2 data for the heat input rate calculations in accordance with paragraphs (b) and (d) of this section.

(b) During the first 720 quality-assured monitor operating hours following initial certification at a particular unit or stack location (*i.e.*, the date and time at which quality-assured data begins to be recorded by a CEMS at that location), or (when implementing these procedures for a previously certified CO_2 or O_2 monitor) during the 720 quality-assured monitor operating hours preceding implementation of the standard missing data procedures in paragraph (d) of this section, the owner or operator shall provide substitute CO_2 or O_2 data, as applicable, for the calculation of heat input (under section 5.2 of appendix F to this part) according to § 75.31(b).

(c) [Reserved]

(d) Upon completion of 720 quality-assured monitor operating hours using the initial missing data procedures of § 75.31(b), the owner or operator shall provide substitute data for CO_2 or O_2 concentration to calculate heat input rate, as follows. Substitute CO_2 data for heat input rate determinations shall be provided according to § 75.35(d). Substitute O_2 data for the heat input rate determinations shall be provided in accordance with the procedures in § 75.33(b), except that the term ''O_2 concentration'' shall apply rather than the term ''SO_2 concentration'' and the term ''O_2 diluent monitor'' shall apply rather than the term ''SO_2 pollutant concentration monitor.'' In addition, the term ''substitute the lesser of'' shall apply rather than ''substitute the greater of;'' the terms ''minimum hourly O_2 concentration'' and ''minimum potential O_2 concentration, as determined under section 2.1.3.2 of appendix A to this part'' shall apply rather than, respectively, the terms ''maximum hourly SO_2 concentration'' and ''maximum potential SO_2 concentration, as determined under section 2.1.1.1 of appendix A to this part;'' and the terms ''10th percentile'' and ''5th percentile'' shall apply rather than, respectively,

the terms ''90th percentile'' and ''95th percentile'' (see Table 1 of § 75.33).

[60 FR 26530, May 17, 1995, as amended at 64 FR 28604, May 26, 1999; 67 FR 40439, June 12, 2002]

§ 75.37 Missing data procedures for moisture.

(a) The owner or operator of a unit with a continuous moisture monitoring system shall substitute for missing moisture data using the procedures of this section.

(b) Where no prior quality-assured moisture data exist, substitute the minimum potential moisture percentage, from section 2.1.5 of appendix A to this part, except when Equation 19–3, 19–4 or 19–8 in Method 19 in appendix A to part 60 of this chapter is used to determine NO_X emission rate. If Equation 19–3, 19–4 or 19–8 in Method 19 in appendix A to part 60 of this chapter is used to determine NO_X emission rate, substitute the maximum potential moisture percentage, as specified in section 2.1.6 of appendix A to this part.

(c) During the first 720 quality-assured monitor operating hours following initial certification at a particular unit or stack location (*i.e.*, the date and time at which quality-assured data begins to be recorded by a moisture monitoring system at that location), the owner or operator shall provide substitute data for moisture according to § 75.31(b).

(d) Upon completion of the first 720 quality-assured monitor operating hours following initial certification, the owner or operator shall provide substitute data for moisture as follows:

(1) Unless Equation 19–3, 19–4 or 19–8 in Method 19 in appendix A to part 60 of this chapter is used to determine NO_X emission rate, follow the missing data procedures in § 75.33(b), except that the term ''moisture percentage'' shall apply rather than ''SO_2 concentration;'' the term ''moisture monitoring system'' shall apply rather than the term ''SO_2 pollutant concentration monitor;'' the term ''substitute the lesser of'' shall apply rather than ''substitute the greater of;'' the terms ''minimum hourly moisture percentage'' and ''minimum potential moisture percentage, as determined under section 2.1.5 of appendix A to this part'' shall apply rather than, respectively, the terms ''maximum hourly SO_2 concentration'' and ''maximum potential SO_2 concentration, as determined under section 2.1.1.1 of appendix A to this part;'' and the terms ''10th percentile'' and ''5th percentile'' shall apply rather than, respectively, the terms ''90th percentile'' and ''95th percentile'' (see Table 1 of § 75.33).

(2) When Equation 19–3, 19–4 or 19–8 in Method 19 in appendix A to part 60 of this chapter is used to determine NO_X emission rate:

(i) Provided that none of the following equations is used to determine SO_2 emissions, CO_2 emissions or heat input: Equation F–2, F–14b, F–16, F–17, or F–18 in appendix F to this part, or Equation 19–5 or 19–9 in Method 19 in appendix A to part 60 of this chapter, use the missing data procedures in § 75.33(b), except that the term ''moisture percentage'' shall apply rather than ''SO_2 concentration,'' the term ''moisture monitoring system'' shall apply rather than ''SO_2 pollutant concentration monitor,'' and the term ''maximum potential moisture percentage, as defined in section 2.1.6 of appendix A to this part'' shall apply, rather than ''maximum potential SO_2 concentration;'' or

(ii) If any of the following equations is used to determine SO_2 emissions, CO_2 emissions or heat input: Equation F–2, F–14b, F–16, F–17, or F–18 in appendix F to this part, or Equation 19–5 or 19–9 in Method 19 in appendix A to part 60 of this chapter, the owner or operator shall petition the Administrator under § 75.66(l) for permission to use an alternative moisture missing data procedure.

[64 FR 28604, May 26, 1999, as amended at 67 FR 40439, June 12, 2002]

§ 75.38 Standard missing data procedures for Hg CEMS.

(a) Once 720 quality assured monitor operating hours of Hg concentration data have been obtained following initial certification, the owner or operator shall provide substitute data for Hg concentration in accordance with the procedures in (75.33(b)(1) through (b)(4), except that the term ''Hg concentration'' shall apply rather than ''SO_2 concentration,'' the term ''Hg

concentration monitoring system'' shall apply rather than ''SO_2 pollutant concentration monitor,'' the term ''maximum potential Hg concentration, as defined in section 2.1.7 of appendix A to this part'' shall apply, rather than ''maximum potential SO_2 concentration'', and the percent monitor data availability trigger conditions prescribed for Hg in Table 1 of § 75.33 shall apply rather than the trigger conditions prescribed for SO_2.

(b) For a unit equipped with a flue gas desulfurization (FGD) system that significantly reduces the concentration of Hg emitted to the atmosphere (including circulating fluidized bed units that use limestone injection), or for a unit equipped with add-on Hg emission controls (e.g., carbon injection), the standard missing data procedures in paragraph (a) of this section may only be used for hours in which the SO_2 or Hg emission controls are documented to be operating properly, as described in § 75.58(b)(3). For any hour(s) in the missing data period for which this documentation is unavailable, the owner or operator shall report, as applicable, the maximum potential Hg concentration, as defined in section 2.1.7 of appendix A to this part. In addition, under § 75.64(c), the designated representative shall submit as part of each electronic quarterly report, a certification statement, verifying the proper operation of the SO_2 or Hg emission controls for each missing data period in which the procedures in paragraph (a) of this section are applied.

(c) For units with FGD systems or add-on Hg emission controls, when the percent monitor data availability is less than 80.0 percent and is greater than or equal to 70.0 percent, and a missing data period occurs, consistent with § 75.34(a)(3), for each missing data hour in which the FGD or Hg emission controls are documented to be operating properly, the owner or operator may report the maximum controlled Hg concentration recorded in the previous 720 quality-assured monitor operating hours. In addition, when the percent monitor data availability is less than 70.0 percent and a missing data period occurs, consistent with § 75.34(a)(5), for each missing data hour in which the FGD or Hg emission controls are documented to be operating properly, the owner or operator may report the greater of the maximum expected Hg concentration (MEC) or 1.25 times the maximum controlled Hg concentration recorded in the previous 720 quality-assured monitor operating hours. The MEC shall be determined in accordance with section 2.1.7.1 of appendix A to this part.

[70 FR 28679, May 18, 2005, as amended at 73 FR 4349, Jan. 24, 2008]

§ 75.39 Missing data procedures for sorbent trap monitoring systems.

(a) If a primary sorbent trap monitoring system has not been certified by the applicable compliance date specified under a State or Federal Hg mass emission reduction program that adopts the requirements of subpart I of this part, and if quality-assured Hg concentration data from a certified backup Hg monitoring system, reference method, or approved alternative monitoring system are unavailable, the owner or operator shall report the maximum potential Hg concentration, as defined in section 2.1.7 of appendix A to this part, until the primary system is certified.

(b) For a certified sorbent trap system, a missing data period will occur in the following circumstances, unless quality-assured Hg concentration data from a certified backup Hg CEMS, sorbent trap system, reference method, or approved alternative monitoring system are available:

(1) A gas sample is not extracted from the stack during unit operation (e.g., during a monitoring system malfunction or when the system undergoes maintenance); or

(2) The results of the Hg analysis for the paired sorbent traps are missing or invalid (as determined using the quality assurance procedures in appendix K to this part). The missing data period begins with the hour in which the paired sorbent traps for which the Hg analysis is missing or invalid were put into service. The missing data period ends at the first hour in which valid Hg concentration data are obtained with another pair of sorbent traps (*i.e.*, the hour at which this pair of traps was placed in service), or with a certified backup Hg CEMS, reference method, or

approved alternative monitoring system.

(c) *Initial missing data procedures.* Use the missing data procedures in § 75.31(b) until 720 hours of quality-assured Hg concentration data have been collected with the sorbent trap monitoring system(s), following initial certification.

(d) *Standard missing data procedures.* Once 720 quality-assured hours of data have been obtained with the sorbent trap system(s), begin reporting the percent monitor data availability in accordance with § 75.32 and switch from the initial missing data procedures in paragraph (c) of this section to the standard missing data procedures in § 75.38.

(e) Notwithstanding the requirements of paragraphs (c) and (d) of this section, if the unit has add-on Hg emission controls or is equipped with a flue gas desulfurization system that significantly reduces Hg emissions, the owner or operator shall report the maximum potential Hg concentration, as defined in section 2.1.7 of appendix A to this part, for any hour(s) in the missing data period for which proper operation of the Hg emission controls or FGD system is not documented according to § 75.58(b)(3).

(f) In cases where the owner or operator elects to use a primary Hg CEMS and a certified redundant (or non-redundant) backup sorbent trap monitoring system (or vice-versa), when both the primary and backup monitoring systems are out-of-service and quality-assured Hg concentration data from a temporary like-kind replacement analyzer, reference method, or approved alternative monitoring system are unavailable, the previous 720 quality-assured monitor operating hours reported in the electronic quarterly report under § 75.64 shall be used for the required missing data lookback, irrespective of whether these data were recorded by the Hg CEMS, the sorbent trap system, a temporary like-kind replacement analyzer, a reference method, or an approved alternative monitoring system.

[70 FR 28679, May 18, 2005, as amended at 73 FR 4349, Jan. 24, 2008]

Subpart E—Alternative Monitoring Systems

§ 75.40 General demonstration requirements.

(a) The owner or operator of an affected unit, or the owner or operator of an affected unit and representing a class of affected units which meet the criteria specified in § 75.47, required to install a continuous emission monitoring system may apply to the Administrator for approval of an alternative monitoring system (or system component) to determine average hourly emission data for SO_2, NO_X, and/or volumetric flow by demonstrating that the alternative monitoring system has the same or better precision, reliability, accessibility, and timeliness as that provided by the continuous emission monitoring system.

(b) The requirements of this subpart shall be met by the alternative monitoring system when compared to a contemporaneously operating, fully certified continuous emission monitoring system or a contemporaneously operating reference method, where the appropriate reference methods are listed in § 75.22.

§ 75.41 Precision criteria.

(a) *Data collection and analysis.* To demonstrate precision equal to or better than the continuous emission monitoring system, the owner or operator shall conduct an F-test, a correlation analysis, and a t-test for bias as described in this section. The t-test shall be performed only on sample data at the normal operating level and primary fuel supply, whereas the F-test and the correlation analysis must be performed on each of the data sets required under paragraphs (a)(4) and (a)(5) of this section. The owner or operator shall collect and analyze data according to the following requirements:

(1) Data from the alternative monitoring system and the continuous emission monitoring system shall be collected and paired in a manner that ensures each pair of values applies to hourly average emissions during the same hour.

(2) An alternative monitoring system that directly measures emissions shall have probes or other measuring devices

in locations that are in proximity to the continuous emission monitoring system and shall provide data on the same parameters as those measured by the continuous emission monitoring system. Data from the alternative monitoring system shall meet the statistical tests for precision in paragraph (c) of this section and the t-test for bias in appendix A of this part.

(3) An alternative monitoring system that indirectly quantifies emission values by measuring inputs, operating characteristics, or outputs and then applying a regression or another quantitative technique to estimate emissions, shall meet the statistical tests for precision in paragraph (c) of this section and the t-test for bias in appendix A of this part.

(4) For flow monitor alternatives, the alternative monitoring system must provide sample data for each of three different exhaust gas velocities while the unit or units, if more than one unit exhausts into the stack or duct, is burning its primary fuel at:

(i) A frequently used low operating level, selected within the range between the minimum safe and stable operating level and 50 percent of the maximum operating level,

(ii) A frequently used high operating level, selected within the range between 80 percent of the maximum operating level and the maximum operating level, and

(iii) The normal operating level, or an evenly spaced intermediary level between low and high levels used if the normal operating level is within a specified range (10.0 percent of the maximum operating level), of either paragraphs (a)(4) (i) or (ii) of this section.

(5) For pollutant concentration monitor alternatives, the alternative monitoring system shall provide sample data for the primary fuel supply and for all alternative fuel supplies that have significantly different sulfur content.

(6) For the normal unit operating level and primary fuel supply, paired hourly sample data shall be provided for at least 90.0 percent of the hours during 720 unit operating hours. For each of the remaining two operating levels for flow monitor alternatives, and for each alternative fuel supply for pollutant concentration monitor alternatives, paired hourly sample data shall be provided for at least 24 successive unit operating hours.

(7) The owner or operator shall not use missing data substitution procedures to provide sample data.

(8) If the collected data meet the requirements of the F-test, the correlation test, and the t-test at one or more, but not all, of the operating levels or fuel supplies, the owner or operator may elect to continue collecting the paired data for up to 1,440 additional operating hours and repeat the statistical tests using the data for the entire 30- to 90-day period.

(9) The owner or operator shall provide two separate time series data plots for the data at each operating level or fuel supply described in paragraphs (a)(4) and (a)(5) of this section. Each data plot shall have a horizontal axis that represents the clock hour and calendar date of the readings and shall contain a separate data point for every hour for the duration of the performance evaluation. The data plots shall show the following:

(i) Percentage difference versus time where the vertical axis represents the percentage difference between each paired hourly reading generated by the continuous emission monitoring system (or reference method) and the alternative emission monitoring system as calculated using the following equation:

$$\Delta e = \frac{e_p - e_v}{e_v} \times 100\%$$

(Eq. 10)

where,

Δ e = Percentage difference between the readings generated by the alternative monitoring system and the continuous emission monitoring system.

e_p = Measured value from the alternative monitoring system.

e_v = Measured value from the continuous emission monitoring system.

(ii) Alternative monitoring system readings and continuous emission monitoring system (or reference method) readings versus time where the vertical

axis represents hourly pollutant concentrations or volumetric flow, as appropriate, and two different symbols are used to represent the readings from the alternative monitoring system and the continuous emission monitoring system (or reference method), respectively.

(b) *Data screening and calculation adjustments.* In preparation for conducting the statistical tests described in paragraph (c) of this section, the owner or operator may screen the data for lognormality and time dependency autocorrelation. If either is detected, the owner or operator shall make the following calculation adjustments:

(1) *Lognormality.* The owner or operator shall conduct any screening and adjustment for lognormality according to the following procedures.

(i) Apply the log transformation to each measured value of either the certified continuous emissions monitoring system or certified flow monitor, using the following equation:

$$l_v = \ln e_v$$

(Eq. 11)

where,

e_v = Hourly value generated by the certified continuous emissions monitoring system or certified flow monitoring system

l_v = Hourly lognormalized data values for the certified monitoring system

and to each measured value, e_p, of the proposed alternative monitoring system, using the following equation to obtain the lognormalized data values, l_p:

$$l_p = \ln e_p$$

(Eq. 12)

where,

e_p = Hourly value generated by the proposed alternative monitoring system.

l_p = Hourly lognormalized data values for the proposed alternative monitoring system.

(ii) Separately test each set of transformed data, l_v and l_p, for normality, using the following:

(A) Shapiro-Wilk test;

(B) Histogram of the transformed data; and

(C) Quantile-Quantile plot of the transformed data.

(iii) The transformed data in a data set will be considered normally distributed if all of the following conditions are satisfied:

(A) The Shapiro-Wilk test statistic, W, is greater than or equal to 0.75 or is not statistically significant at $\alpha = 0.05$.

(B) The histogram of the data is unimodal and symmetric.

(C) The Quantile-Quantile plot is a diagonal straight line.

(iv) If both of the transformed data sets, l_v and l_p, meet the conditions for normality, specified in paragraphs (b)(1)(iii) (A) through (C) of this section, the owner or operator may use the transformed data, l_v and l_p, in place of the original measured data values in the statistical tests for alternative monitoring systems as described in paragraph (c) of this section and in appendix A of this part.

(v) If the transformed data are used in the statistical tests in paragraph (c) of this section and in appendix A of this part, the owner or operator shall provide the following:

(A) Copy of the original measured values and the corresponding transformed data in printed and electronic format.

(B) Printed copy of the test results and plots described in paragraphs (b)(1)(i) through (iii) of this section.

(2) *Time dependency (autocorrelation).* The screening and adjustment for time dependency are conducted according to the following procedures:

(i) Calculate the degree of autocorrelation of the data on their LAG1 values, where the degree of autocorrelation is represented by the Pearson autocorrelation coefficient, ρ, computed from an AR(1) autoregression model, such that:

$$\rho = \frac{COV(x_i', x_i'')}{S_{x_i'} S_{x_i''}}$$

(Eq. 13)

where,

x'_i = The original data value at hour i.

x''_i = The LAG1 data value at hour i.

$COV(x'_i, x''_i)$ = The autocovariance of x'_i and defined by,

$$COV(x_i', x_i'') = \frac{\sum_{i=1}^{n} (x_i' - \bar{x}')(x_i'' - \bar{x}'')}{(n-1)}$$

(Eq. 14)

where,

n = The total number of observations in which both the original value, x'_i, and the lagged value, x''_i, are available in the data set.

s'_{xi} = The standard deviation of the original data values, x'_i defined by,

$$s_{x_i'} = \sqrt{\frac{\sum_{i=1}^{n}\left(x_i' - \overline{x}'\right)^2}{n-1}}$$

(Eq. 15)

where,

s''_{xi} = The standard deviation of the LAG1 data values, x''_i, defined by

$$s_{x_i''} = \sqrt{\frac{\sum_{i=1}^{n}\left(x_i'' - \overline{x}''\right)^2}{n-1}}$$

(Eq. 16)

where,

x' = The mean of the original data values, x'_i defined by

$$\overline{x}' = \frac{\sum_{i=1}^{n} x_i'}{n}$$

(Eq. 17)

where,

x'' = The mean of the LAG1 data values, x''_i, defined by

$$\overline{x}'' = \frac{\sum_{i=1}^{n} x_i''}{n}$$

(Eq. 18)

where,

(ii) The data in a data set will be considered autocorrelated if the autocorrelation coefficient, ρ, is significant at the 5 percent significance level. To determine if this condition is satisfied, calculate Z using the following equation:

$$Z = 0.5\left[\ln\left(\frac{1+\rho}{1-\rho}\right)\right]\sqrt{n-3}$$

(Eq. 19)

If $Z > 1.96$, then the autocorrelation coefficient, ρ, is significant at the 5 percent significance level ($a = 0.05$).

(iii) If the data in a data set satisfy the conditions for autocorrelation, specified in paragraph (b)(2)(ii) of this section, the variance of the data, S^2, may be adjusted using the following equation:

$S^2_{ADJ} = VIF \times S^2$

(Eq. 20)

where,

S^2 = The original, unadjusted variance of the data set.

VIF = The variance inflation factor, defined by

$$VIF = \frac{1}{\left[1 - \frac{2\rho}{(n-1)(1-\rho)} + \frac{2\rho(1-\rho^n)}{n(n-1)(1-\rho)^2}\right]}$$

(Eq. 21)

S^2_{ADJ} = The autocorrelation-adjusted variance for the data set.

(iv) The procedures described in paragraphs (b)(2)(i)–(iii) of this section may be separately applied to the following data sets in order to derive distinct autocorrelation coefficients and variance inflation factors for each data set:

(A) The set of measured hourly values, e_v, generated by the certified continuous emissions monitoring system or certified flow monitoring system.

(B) The set of hourly values, e_p, generated by the proposed alternative monitoring system,

(C) The set of hourly differences, $e_v - e_p$, between the hourly values, e_v, generated by the certified continuous emissions monitoring system or certified flow monitoring system and the hourly values, e_p, generated by the proposed alternative monitoring system.

(v) For any data set, listed in paragraph (b)(2)(iv) of this section, that satisfies the conditions for autocorrelation specified in paragraph (b)(2)(ii) of this section, the owner or operator may adjust the variance of that data set, using equation 20 of this section.

(A) The adjusted variance may be used in place of the corresponding original variance, as calculated using equation 23 of this section, in the F-test (Equation 24) of this section.

(B) In place of the standard error of the mean,

$$\frac{S_d}{\sqrt{n}}$$

in the bias test Equation A–9 of appendix A of this part the following adjusted standard error of the mean may be used:

$$\left(\frac{S_d}{\sqrt{n}}\right)_{adj} = \left[\sqrt{\left(\frac{1+\rho}{1-\rho}\right) - \left(\frac{2\rho(1-\rho^n)}{n(1-\rho)^2}\right)}\right] \times \sqrt{VIF} \times \left(\frac{S_d}{\sqrt{n}}\right)$$

(Eq. 22)where

$\left(\frac{S_d}{\sqrt{n}}\right)_{adj}$ = **The autocorrelation-adjusted standard error of the mean.**

(vi) For each data set in which a variance adjustment is used, the owner or operator shall provide the following:

(A) All values in the data set in printed and electronic format.

(B) Values of the autocorrelation coefficient, its level of significance, the variance inflation factor, and the unadjusted original and adjusted values found in equations 20 and 22 of this section.

(C) Equation and related statistics of the AR(1) autoregression model of the data set.

(D) Printed documentation of the intermediate calculations used to derive the autocorrelation coefficient and the Variance Inflation Factor.

(c) *Statistical Tests.* The owner or operator shall perform the F-test and correlation analysis as described in this paragraph and the t-test for bias described in appendix A of this part to demonstrate the precision of the alternative monitoring system.

(1) *F-test.* The owner or operator shall conduct the F-test according to the following procedures.

(i) Calculate the variance of the certified continuous emission monitoring system or certified flow monitor as applicable, S_v2, and the proposed method, S_p2, using the following equation.

$$S^2 = \frac{\sum_{i=1}^{n}(e_i - e_m)^2}{n-1}$$

(Eq. 23)

where,

e_i = Measured values of either the certified continuous emission monitoring system or certified flow monitor, as applicable, or proposed method.

e_m = Mean of either the certified continuous emission monitoring system or certified flow monitor, as applicable, or proposed method values.

n = Total number of paired samples.

(ii) Determine if the variance of the proposed method is significantly different from that of the certified continuous emission monitoring system or certified flow monitor, as applicable, by calculating the F-value using the following equation.

$$F = \frac{S_p^2}{S_v^2}$$

(Eq. 24)

Compare the experimental F-value with the critical value of F at the 95-percent confidence level with n–1 degrees of freedom. The critical value is obtained from a table for F-distribution. If the calculated F-value is greater than the critical value, the proposed method is unacceptable.

(2) *Correlation analysis.* The owner or operator shall conduct the correlation analysis according to the following procedures.

(i) Plot each of the paired emissions readings as a separate point on a graph where the vertical axis represents the value (pollutant concentration or volumetric flow, as appropriate) generated by the alternative monitoring system and the horizontal axis represents the value (pollutant concentration or volumetric flow, as appropriate) generated by the continuous emission monitoring system (or reference method). On the graph, draw a horizontal line representing the mean value, e_p, for the alternative monitoring system and a vertical line representing the mean value, e_v, for the continuous emission monitoring system where,

$$\overline{e_p} = \frac{\sum e_p}{n}$$

(Eq. 25)

$$\overline{e_v} = \frac{\sum e_v}{n}$$

(Eq. 26)

where,

e_p = Hourly value generated by the alternative monitoring system.

e_v = Hourly value generated by the continuous emission monitoring system.

n = Total number of hours for which data were generated for the tests.

A separate graph shall be produced for the data generated at each of the operating levels or fuel supplies described in paragraphs (a)(4) and (a)(5) of this section.

(ii) Use the following equation to calculate the coefficient of correlation, r, between the emissions data from the alternative monitoring system and the continuous emission monitoring system using all hourly data for which paired values were available from both monitoring systems.

$$r = \frac{\sum e_p e_v - \left(\sum e_p\right)\left(\sum e_v\right)/n}{\left(\left[\sum e_p^2 - \left(\sum e_p\right)^2/n\right]\left[\sum e_v^2 - \left(\sum e_v\right)^2/n\right]\right)^{(1/2)}} \qquad \text{(Eq. 27)}$$

(Eq. 27)

(iii) If the calculated r-value is less than 0.8, the proposed method is unacceptable.

[58 FR 3701, Jan. 11, 1993, as amended at 60 FR 26530, May 17, 1995; 60 FR 40296, Aug. 8, 1995; 67 FR 40440, June 12, 2002]

§ 75.42 Reliability criteria.

To demonstrate reliability equal to or better than the continuous emission monitoring system, the owner or operator shall demonstrate that the alternative monitoring system is capable of providing valid 1-hr averages for 95.0 percent or more of unit operating hours over a 1-yr period and that the system meets the applicable requirements of appendix B of this part.

§ 75.43 Accessibility criteria.

To demonstrate accessibility equal to or better than the continuous emission monitoring system, the owner or operator shall provide reports and on-site records of emission data to demonstrate that the alternative monitoring system provides data meeting the requirements of subparts F and G of this part.

§ 75.44 Timeliness criteria.

To demonstrate timeliness equal to or better than the continuous emission

monitoring system, the owner or operator shall demonstrate that the alternative monitoring system can meet the requirements of subparts F and G of this part; can provide a continuous, quality-assured, permanent record of certified emissions data on an hourly basis; and can issue a record of data for the previous day within 24 hours.

§ 75.45 Daily quality assurance criteria.

The owner or operator shall either demonstrate that daily tests equivalent to those specified in appendix B of this part can be performed on the alternative monitoring system or demonstrate and document that such tests are unnecessary for providing quality-assured data.

§ 75.46 Missing data substitution criteria.

The owner or operator shall demonstrate that all missing data can be accounted for in a manner consistent with the applicable missing data procedures in subpart D of this part.

§ 75.47 Criteria for a class of affected units.

(a) The owner or operator of an affected unit may represent a class of affected units for the purpose of applying to the Administrator for a class-approved alternative monitoring system.

(b) The owner or operator of an affected unit representing a class of affected units shall provide the following information:

(1) A description of the affected unit and how it appropriately represents the class of affected units;

(2) A description of the class of affected units, including data describing all the affected units which will comprise the class; and

(3) A demonstration that the magnitude of emissions of all units which will comprise the class of affected units are *de minimis*.

(c) If the Administrator determines that the emissions from all affected units which will comprise the class of units are *de minimis*, then the Administrator shall publish notice in the FEDERAL REGISTER, providing a 30-day period for public comment, prior to granting a class-approved alternative monitoring system.

[60 FR 40297, Aug. 8, 1995]

§ 75.48 Petition for an alternative monitoring system.

(a) The designated representative shall submit the following information in the application for certification or recertification of an alternative monitoring system.

(1) Source identification information.

(2) A description of the alternative monitoring system.

(3) Data, calculations, and results of the statistical tests, specified in § 75.41(c) of this part, including:

(i) Date and hour.

(ii) Hourly test data for the alternative monitoring system at each required operating level and fuel type. The fuel type, operating level and gross unit load shall be recorded.

(iii) Hourly test data for the continuous emissions monitoring system at each required operating level and fuel type. The fuel type, operating level and gross unit load shall be recorded.

(iv) Arithmetic mean of the alternative monitoring system measurement values, as specified in Equation 25 in § 75.41(c) of this part, of the continuous emission monitoring system values, as specified in Equation 26 in § 75.41(c) of this part, and of their differences.

(v) Standard deviation of the difference, as specified in equation A–8 in appendix A of this part.

(vi) Confidence coefficient, as specified in equation A–9 in appendix A of this part.

(vii) The bias test results as specified in § 7.6.4 in appendix A of this part.

(viii) Variance of the measured values for the alternative monitoring system and of the measured values for the continuous emission monitoring system, as specified in Equation 23 in § 75.41(c) of this part.

(ix) F-statistic, as specified in Equation 24 in § 75.41(c) of this part.

(x) Critical value of F at the 95-percent confidence level with n–1 degrees of freedom.

(xi) Coefficient of correlation, r, as specified in Equation 27 in § 75.41(c) of this part.

(4) Data plots, specified in §§ 75.41(a)(9) and 75.41(c)(2)(i) of this part.

(5) Results of monitor reliability analysis.

(6) Results of monitor accessibility analysis.

(7) Results of monitor timeliness analysis.

(8) A detailed description of the process used to collect data, including location and method of ensuring an accurate assessment of operating hourly conditions on a real-time basis.

(9) A detailed description of the operation, maintenance, and quality assurance procedures for the alternative monitoring system as required in appendix B of this part.

(10) A description of methods used to calculate heat input or diluent gas concentration, if applicable.

(11) Results of tests and measurements (including the results of all reference method field test sheets, charts, laboratory analyses, example calculations, or other data as appropriate) necessary to substantiate that the alternative monitoring system is equivalent in performance to an appropriate, certified operating continuous emission monitoring system.

(b) [Reserved]

[60 FR 40297, Aug. 8, 1995, as amended at 64 28605, May 26, 1999]

Subpart F—Recordkeeping Requirements

§§ 75.50–75.52 [Reserved]

§ 75.53 Monitoring plan.

(a) *General provisions.* (1) The provisions of paragraphs (e) and (f) of this section shall be met through December 31, 2008. The owner or operator shall meet the requirements of paragraphs (a), (b), (e), and (f) of this section through December 31, 2008, except as otherwise provided in paragraph (g) of this section. On and after January 1, 2009, the owner or operator shall meet the requirements of paragraphs (a), (b), (g), and (h) of this section only. In addition, the provisions in paragraphs (g) and (h) of this section that support a regulatory option provided in another section of this part must be followed if the regulatory option is used prior to January 1, 2009.

(2) The owner or operator of an affected unit shall prepare and maintain a monitoring plan. Except as provided in paragraphs (f) or (h) of this section (as applicable), a monitoring plan shall contain sufficient information on the continuous emission or opacity monitoring systems, excepted methodology under § 75.19, or excepted monitoring systems under appendix D or E to this part and the use of data derived from these systems to demonstrate that all unit SO_2 emissions, NO_X emissions, CO_2 emissions, and opacity are monitored and reported.

(b) Whenever the owner or operator makes a replacement, modification, or change in the certified CEMS, continuous opacity monitoring system, excepted methodology under § 75.19, excepted monitoring system under appendix D or E to this part, or alternative monitoring system under subpart E of this part, including a change in the automated data acquisition and handling system or in the flue gas handling system, that affects information reported in the monitoring plan (e.g., a change to a serial number for a component of a monitoring system), then the owner or operator shall update the monitoring plan, by the applicable deadline specified in § 75.62 or elsewhere in this part.

(c)–(d) [Reserved]

(e) *Contents of the monitoring plan.* Each monitoring plan shall contain the information in paragraph (e)(1) of this section in electronic format and the information in paragraph (e)(2) of this section in hardcopy format. Electronic storage of all monitoring plan information, including the hardcopy portions, is permissible provided that a paper copy of the information can be furnished upon request for audit purposes.

(1) *Electronic.* (i) ORISPL numbers developed by the Department of Energy and used in the National Allowance Data Base (or equivalent facility ID number assigned by EPA, if the facility does not have an ORSPL number), for all affected units involved in the monitoring plan, with the following information for each unit:

(A) Short name;

(B) Classification of the unit as one of the following: Phase I (including substitution or compensating units), Phase II, new, or nonaffected;

(C) Type of boiler (or boilers for a group of units using a common stack);

(D) Type of fuel(s) fired by boiler, fuel type start and end dates, primary/secondary/emergency/startup fuel indicator, and, if more than one fuel, the fuel classification of the boiler;

(E) Type(s) of emission controls for SO_2, NO_X, Hg, and particulates installed or to be installed, including specifications of whether such controls are pre-combustion, post-combustion, or integral to the combustion process; control equipment code, installation date, and optimization date; control equipment retirement date (if applicable); primary/secondary controls indicator; and an indicator for whether the controls are an original installation;

(F) Maximum hourly heat input capacity;

(G) Date of first commercial operation;

(H) Unit retirement date (if applicable);

(I) Maximum hourly gross load (in MW, rounded to the nearest MW, or steam load in 1000 lb/hr, rounded to the nearest 100 lb/hr);

(J) Identification of all units using a common stack;

(K) Activation date for the stack/pipe;

(L) Retirement date of the stack/pipe (if applicable); and

(M) Indicator of whether the stack is a bypass stack.

(ii) For each unit and parameter required to be monitored, identification of monitoring methodology information, consisting of monitoring methodology, type of fuel associated with the methodology, primary/secondary methodology indicator, missing data approach for the methodology, methodology start date, and methodology end date (if applicable).

(iii) The following information:

(A) Program(s) for which the EDR is submitted;

(B) Unit classification;

(C) Reporting frequency;

(D) Program participation date;

(E) State regulation code (if applicable); and

(F) State or local regulatory agency code.

(iv) Identification and description of each monitoring component (including each monitor and its identifiable components, such as analyzer and/or probe) in the CEMS (*e.g.*, SO_2 pollutant concentration monitor, flow monitor, moisture monitor; NO_X pollutant concentration monitor, Hg monitor, and diluent gas monitor), the sorbent trap monitoring system, the continuous opacity monitoring system, or the excepted monitoring system (*e.g.*, fuel flowmeter, data acquisition and handling system), including:

(A) Manufacturer, model number and serial number;

(B) Component/system identification code assigned by the utility to each identifiable monitoring component (such as the analyzer and/or probe). Each code shall use a three-digit format, unique to each monitoring component and unique to each monitoring system;

(C) Designation of the component type and method of sample acquisition or operation, (e.g., in situ pollutant concentration monitor or thermal flow monitor);

(D) Designation of the system as a primary, redundant backup, non-redundant backup, data backup, or reference method backup system, as provided in § 75.10(e);

(E) First and last dates the system reported data;

(F) Status of the monitoring component; and

(G) Parameter monitored.

(v) Identification and description of all major hardware and software components of the automated data acquisition and handling system, including:

(A) Hardware components that perform emission calculations or store data for quarterly reporting purposes (provide the manufacturer and model number); and

(B) Software components (provide the identification of the provider and model/version number).

(vi) Explicit formulas for each measured emission parameter, using component/system identification codes for the primary system used to measure the parameter that links CEMS or excepted monitoring system observations

with reported concentrations, mass emissions, or emission rates, according to the conversions listed in appendix D or E to this part. Formulas for backup monitoring systems are required only if different formulas for the same parameter are used for the primary and backup monitoring systems (e.g., if the primary system measures pollutant concentration on a different moisture basis from the backup system). The formulas must contain all constants and factors required to derive mass emissions or emission rates from component/system code observations and an indication of whether the formula is being added, corrected, deleted, or is unchanged. Each emissions formula is identified with a unique three digit code. The owner or operator of a low mass emissions unit for which the owner or operator is using the optional low mass emissions excepted methodology in § 75.19(c) is not required to report such formulas.

(vii) Inside cross-sectional area (ft^2) at flue exit (for all units) and at flow monitoring location (for units with flow monitors, only).

(viii) Stack exit height (ft) above ground level and ground level elevation above sea level.

(ix) Monitoring location identification, facility identification code as assigned by the Administrator for use under the Acid Rain Program or this part, and the following information, as reported to the Energy Information Administration (EIA): facility identification number, flue identification number, boiler identification number, ARP/Subpart H facility ID number or ORISPL number (as applicable), reporting year, and 767 reporting indicator (or equivalent).

(x) For each parameter monitored: Scale, maximum potential concentration (and method of calculation), maximum expected concentration (if applicable) (and method of calculation), maximum potential flow rate (and method of calculation), maximum potential NO_X emission rate, span value, full-scale range, daily calibration units of measure, span effective date/hour, span inactivation date/hour, indication of whether dual spans are required, default high range value, flow rate span, and flow rate span value and full scale value (in scfh) for each unit or stack using SO_2, NO_X, CO_2, O_2, Hg, or flow component monitors.

(xi) If the monitoring system or excepted methodology provides for the use of a constant, assumed, or default value for a parameter under specific circumstances, then include the following information for each such value for each parameter:

(A) Identification of the parameter;

(B) Default, maximum, minimum, or constant value, and units of measure for the value;

(C) Purpose of the value;

(D) Indicator of use during controlled/uncontrolled hours;

(E) Type of fuel;

(F) Source of the value;

(G) Value effective date and hour;

(H) Date and hour value is no longer effective (if applicable); and

(I) For units using the excepted methodology under § 75.19, the applicable SO_2 emission factor.

(xii) Uless otherwise specified in section 6.5.2.1 of appendix A to this part, for each unit of common stack on which hardware CEMS are installed:

(A) The upper and lower boundaries of the range of operation (as defined in section 6.5.2.1 of appendix A to this part), expressed in megawatts, or thousands of lb/hr of steam, or ft/sec (as applicable);

(B) The load or operating level(s) designated as normal in section 6.5.2.1 of appendix A to this part, expressed in megawatts, or thousands of lb/hr of steam, or ft/sec (as applicable);

(C) The two load or operating levels (*i.e.*, low, mid, or high) identified in section 6.5.2.1 of appendix A to this part as the most frequently used;

(D) The date of the data analysis used to determine the normal load (or operating) level(s) and the two most frequently-used load (or operating) levels; and

(E) Activation and deactivation dates, when the normal load or operating level(s) or two most frequently-used load or operating levels change and are updated.

(xiii) For each unit for which the optional fuel flow-to-load test in section 2.1.7 of appendix D to this part is used:

(A) The upper and lower boundaries of the range of operation (as defined in

section 6.5.2.1 of appendix A to this part), expressed in megawatts or thousands of lb/hr of steam;

(B) The load level designated as normal, pursuant to section 6.5.2.1 of appendix A to this part, expressed in megawatts or thousands of lb/hr of steam; and

(C) The date of the load analysis used to determine the normal load level.

(xiv) For each unit with a flow monitor installed on a rectangular stack or duct, if a wall effects adjustment factor (WAF) is determined and applied to the hourly flow rate data:

(A) Stack or duct width at the test location, ft;

(B) Stack or duct depth at the test location, ft;

(C) Wall effects adjustment factor (WAF), to the nearest 0.0001;

(D) Method of determining the WAF;

(E) WAF Effective date and hour;

(F) WAF no longer effective date and hour (if applicable);

(G) WAF determination date;

(H) Number of WAF test runs;

(I) Number of Method 1 traverse points in the WAF test;

(J) Number of test ports in the WAF test; and

(K) Number of Method 1 traverse points in the reference flow RATA.

(2) *Hardcopy*. (i) Information, including (as applicable): identification of the test strategy; protocol for the relative accuracy test audit; other relevant test information; calibration gas levels (percent of span) for the calibration error test and linearity check; calculations for determining maximum potential concentration, maximum expected concentration (if applicable), maximum potential flow rate, maximum potential NO_X emission rate, and span; and apportionment strategies under §§ 75.10 through 75.18.

(ii) Description of site locations for each monitoring component in the continuous emission or opacity monitoring systems, including schematic diagrams and engineering drawings specified in paragraphs (e)(2)(iv) and (e)(2)(v) of this section and any other documentation that demonstrates each monitor location meets the appropriate siting criteria.

(iii) A data flow diagram denoting the complete information handling path from output signals of CEMS components to final reports.

(iv) For units monitored by a continuous emission or opacity monitoring system, a schematic diagram identifying entire gas handling system from boiler to stack for all affected units, using identification numbers for units, monitor components, and stacks corresponding to the identification numbers provided in paragraphs (e)(1)(i), (e)(1)(iv), (e)(1)(vi), and (e)(1)(ix) of this section. The schematic diagram must depict stack height and the height of any monitor locations. Comprehensive and/or separate schematic diagrams shall be used to describe groups of units using a common stack.

(v) For units monitored by a continuous emission or opacity monitoring system, stack and duct engineering diagrams showing the dimensions and location of fans, turning vanes, air preheaters, monitor components, probes, reference method sampling ports, and other equipment that affects the monitoring system location, performance, or quality control checks.

(f) *Contents of monitoring plan for specific situations*. The following additional information shall be included in the monitoring plan for the specific situations described:

(1) For each gas-fired unit or oil-fired unit for which the owner or operator uses the optional protocol in appendix D to this part for estimating heat input and/or SO_2 mass emissions, or for each gas-fired or oil-fired peaking unit for which the owner/operator uses the optional protocol in appendix E to this part for estimating NO_X emission rate (using a fuel flowmeter), the designated representative shall include the following additional information in the monitoring plan:

(i) *Electronic*. (A) Parameter monitored;

(B) Type of fuel measured, maximum fuel flow rate, units of measure, and basis of maximum fuel flow rate (*i.e.*, upper range value or unit maximum) for each fuel flowmeter;

(C) Test method used to check the accuracy of each fuel flowmeter;

(D) Submission status of the data;

(E) Monitoring system identification code; and

(F) The method used to demonstrate that the unit qualifies for monthly GCV sampling or for daily or annual fuel sampling for sulfur content, as applicable.

(ii) *Hardcopy*. (A) A schematic diagram identifying the relationship between the unit, all fuel supply lines, the fuel flowmeter(s), and the stack(s). The schematic diagram must depict the installation location of each fuel flowmeter and the fuel sampling location(s). Comprehensive and/or separate schematic diagrams shall be used to describe groups of units using a common pipe;

(B) For units using the optional default SO_2 emission rate for ''pipeline natural gas'' or ''natural gas'' in appendix D to this part, the information on the sulfur content of the gaseous fuel used to demonstrate compliance with either section 2.3.1.4 or 2.3.2.4 of appendix D to this part;

(C) For units using the 720 hour test under 2.3.6 of Appendix D of this part to determine the required sulfur sampling requirements, report the procedures and results of the test; and

(D) For units using the 720 hour test under 2.3.5 of Appendix D of this part to determine the appropriate fuel GCV sampling frequency, report the procedures used and the results of the test;

(2) For each gas-fired peaking unit and oil-fired peaking unit for which the owner or operator uses the optional procedures in appendix E to this part for estimating NO_X emission rate, the designated representative shall include in the monitoring plan:

(i) *Electronic*. Unit operating and capacity factor information demonstrating that the unit qualifies as a peaking unit or gas-fired unit, as defined in § 72.2 of this chapter, and NO_X correlation test information, including:

(A) Test date;

(B) Test number;

(C) Operating level;

(D) Segment ID of the NO_X correlation curve;

(E) NO_X monitoring system identification;

(F) Low and high heat input rate values and corresponding NO_X emission rates;

(G) Type of fuel; and

(H) To document the unit qualifies as a peaking unit, current calendar year or ozone season, capacity factor data as specified in the definition of peaking unit in § 72.2 of this chapter, and an indication of whether the data are actual or projected data.

(ii) *Hardcopy*. (A) A protocol containing methods used to perform the baseline or periodic NO_X emission test; and

(B) Unit operating parameters related to NO_X formation by the unit.

(3) For each gas-fired unit and diesel-fired unit or unit with a wet flue gas pollution control system for which the designated representative claims an opacity monitoring exemption under § 75.14, the designated representative shall include in the hardcopy monitoring plan the information specified under § 75.14(b), (c), or (d), demonstrating that the unit qualifies for the exemption.

(4) For each monitoring system recertification, maintenance, or other event, the designated representative shall include the following additional information in electronic format in the monitoring plan:

(i) Component/system identification code;

(ii) Event code or code for required test;

(iii) Event begin date and hour;

(iv) Conditionally valid data period begin date and hour (if applicable);

(v) Date and hour that last test is successfully completed; and

(vi) Indicator of whether conditionally valid data were reported at the end of the quarter.

(5) For each unit using the low mass emission excepted methodology under § 75.19 the designated representative shall include the following additional information in the monitoring plan that accompanies the initial certification application:

(i) *Electronic*. For each low mass emissions unit, report the results of the analysis performed to qualify as a low mass emissions unit under § 75.19(c). This report will include either the previous three years actual or projected emissions. The following items should be included:

(A) Current calendar year of application;

(B) Type of qualification;

(C) Years one, two, and three;

(D) Annual or ozone season measured, estimated or projected NO_X mass emissions for years one, two, and three;

(E) Annual measured, estimated or projected SO_2 mass emissions for years one, two, and three; and

(F) Annual or ozone season operating hours for years one, two, and three.

(ii) *Hardcopy*. (A) A schematic diagram identifying the relationship between the unit, all fuel supply lines and tanks, any fuel flowmeter(s), and the stack(s). Comprehensive and/or separate schematic diagrams shall be used to describe groups of units using a common pipe;

(B) For units which use the long term fuel flow methodology under § 75.19(c)(3), the designated representative must provide a diagram of the fuel flow to each affected unit or group of units and describe in detail the procedures used to determine the long term fuel flow for a unit or group of units for each fuel combusted by the unit or group of units;

(C) A statement that the unit burns only gaseous fuel(s) and/or fuel oil and a list of the fuels that are burned or a statement that the unit is projected to burn only gaseous fuel(s) and/or fuel oil and a list of the fuels that are projected to be burned;

(D) A statement that the unit meets the applicability requirements in §§ 75.19(a) and (b); and

(E) Any unit historical actual, estimated and projected emissions data and calculated emissions data demonstrating that the affected unit qualifies as a low mass emissions unit under §§ 75.19(a) and 75.19(b).

(6) For each gas-fired unit the designated representative shall include in the monitoring plan, in electronic format, the following: current calendar year, fuel usage data as specified in the definition of gas-fired in § 72.2 of this part, and an indication of whether the data are actual or projected data.

(g) *Contents of the monitoring plan*. The requirements of paragraphs (g) and (h) of this section shall be met on and after January 1, 2009. Notwithstanding this requirement, the provisions of paragraphs (g) and (h) of this section may be implemented prior to January 1, 2009, as follows. In 2008, the owner or operator may opt to record and report the monitoring plan information in paragraphs (g) and (h) of this section, in lieu of recording and reporting the information in paragraphs (e) and (f) of this section. Each monitoring plan shall contain the information in paragraph (g)(1) of this section in electronic format and the information in paragraph (g)(2) of this section in hardcopy format. Electronic storage of all monitoring plan information, including the hardcopy portions, is permissible provided that a paper copy of the information can be furnished upon request for audit purposes.

(1) *Electronic*. (i) The facility ORISPL number developed by the Department of Energy and used in the National Allowance Data Base (or equivalent facility ID number assigned by EPA, if the facility does not have an ORISPL number). Also provide the following information for each unit and (as applicable) for each common stack and/or pipe, and each multiple stack and/or pipe involved in the monitoring plan:

(A) A representation of the exhaust configuration for the units in the monitoring plan. Provide the ID number of each unit and assign a unique ID number to each common stack, common pipe multiple stack and/or multiple pipe associated with the unit(s) represented in the monitoring plan. For common and multiple stacks and/or pipes, provide the activation date and deactivation date (if applicable) of each stack and/or pipe;

(B) Identification of the monitoring system location(s) (e.g., at the unit-level, on the common stack, at each multiple stack, etc.). Provide an indicator (''flag'') if the monitoring location is at a bypass stack or in the ductwork (breeching);

(C) The stack exit height (ft) above ground level and ground level elevation above sea level, and the inside cross-sectional area (ft^2) at the flue exit and at the flow monitoring location (for units with flow monitors, only). Also use appropriate codes to indicate the material(s) of construction and the shape(s) of the stack or duct cross-section(s) at the flue exit and (if applicable) at the flow monitor location;

(D) The type(s) of fuel(s) fired by each unit. Indicate the start and (if applicable) end date of combustion for each type of fuel, and whether the fuel is the primary, secondary, emergency, or startup fuel;

(E) The type(s) of emission controls that are used to reduce SO_2, NO_X, Hg, and particulate emissions from each unit. Also provide the installation date, optimization date, and retirement date (if applicable) of the emission controls, and indicate whether the controls are an original installation;

(F) Maximum hourly heat input capacity of each unit; and

(G) A non-load based unit indicator (if applicable) for units that do not produce electrical or thermal output.

(ii) For each monitored parameter (e.g., SO_2, NO_X, flow, etc.) at each monitoring location, specify the monitoring methodology and the missing data approach for the parameter. If the unmonitored bypass stack approach is used for a particular parameter, indicate this by means of an appropriate code. Provide the activation date/hour, and deactivation date/hour (if applicable) for each monitoring methodology and each missing data approach.

(iii) For each required continuous emission monitoring system, each fuel flowmeter system, each continuous opacity monitoring system, and each sorbent trap monitoring system (as defined in § 72.2 of this chapter), identify and describe the major monitoring components in the monitoring system (e.g., gas analyzer, flow monitor, opacity monitor, moisture sensor, fuel flowmeter, DAHS software, etc.). Other important components in the system (e.g., sample probe, PLC, data logger, etc.) may also be represented in the monitoring plan, if necessary. Provide the following specific information about each component and monitoring system:

(A) For each required monitoring system:

(*1*) Assign a unique, 3-character alphanumeric identification code to the system;

(*2*) Indicate the parameter monitored by the system;

(*3*) Designate the system as a primary, redundant backup, non-redundant backup, data backup, or reference method backup system, as provided in § 75.10(e); and

(*4*) Indicate the system activation date/hour and deactivation date/hour (as applicable).

(B) For each component of each monitoring system represented in the monitoring plan:

(*1*) Assign a unique, 3-character alphanumeric identification code to the component;

(*2*) Indicate the manufacturer, model and serial number;

(*3*) Designate the component type;

(*4*) For dual-span applications, indicate whether the analyzer component ID represents a high measurement scale, a low scale, or a dual range;

(*5*) For gas analyzers, indicate the moisture basis of measurement;

(*6*) Indicate the method of sample acquisition or operation, (e.g., extractive pollutant concentration monitor or thermal flow monitor); and

(*7*) Indicate the component activation date/hour and deactivation date/hour (as applicable).

(iv) Explicit formulas, using the component and system identification codes for the primary monitoring system, and containing all constants and factors required to derive the required mass emissions, emission rates, heat input rates, etc. from the hourly data recorded by the monitoring systems. Formulas using the system and component ID codes for backup monitoring systems are required only if different formulas for the same parameter are used for the primary and backup monitoring systems (e.g., if the primary system measures pollutant concentration on a different moisture basis from the backup system). Provide the equation number or other appropriate code for each emissions formula (e.g., use code F–1 if Equation F–1 in appendix F to this part is used to calculate SO_2 mass emissions). Also identify each emissions formula with a unique three character alphanumeric code. The formula effective start date/hour and inactivation date/hour (as applicable) shall be included for each formula. The owner or operator of a unit for which the optional low mass emissions excepted methodology in § 75.19 is being used is not required to report such formulas.

(v) For each parameter monitored with CEMS, provide the following information:

(A) Measurement scale (high or low);

(B) Maximum potential value (and method of calculation). If NO_X emission rate in lb/mmBtu is monitored, calculate and provide the maximum potential NO_X emission rate in addition to the maximum potential NO_X concentration;

(C) Maximum expected value (if applicable) and method of calculation;

(D) Span value(s) and full-scale measurement range(s);

(E) Daily calibration units of measure;

(F) Effective date/hour, and (if applicable) inactivation date/hour of each span value;

(G) An indication of whether dual spans are required; and

(H) The default high range value (if applicable) and the maximum allowable low-range value for this option.

(vi) If the monitoring system or excepted methodology provides for the use of a constant, assumed, or default value for a parameter under specific circumstances, then include the following information for each such value for each parameter:

(A) Identification of the parameter;

(B) Default, maximum, minimum, or constant value, and units of measure for the value;

(C) Purpose of the value;

(D) Indicator of use, i.e., during controlled hours, uncontrolled hours, or all operating hours;

(E) Type of fuel;

(F) Source of the value;

(G) Value effective date and hour;

(H) Date and hour value is no longer effective (if applicable); and

(I) For units using the excepted methodology under § 75.19, the applicable SO_2 emission factor.

(vii) Unless otherwise specified in section 6.5.2.1 of appendix A to this part, for each unit or common stack on which hardware CEMS are installed:

(A) Maximum hourly gross load (in MW, rounded to the nearest MW, or steam load in 1000 lb/hr (*i.e.*, klb/hr), rounded to the nearest klb/hr, or thermal output in mmBtu/hr, rounded to the nearest mmBtu/hr), for units that produce electrical or thermal output;

(B) The upper and lower boundaries of the range of operation (as defined in section 6.5.2.1 of appendix A to this part), expressed in megawatts, thousands of lb/hr of steam, mmBtu/hr of thermal output, or ft/sec (as applicable);

(C) Except for peaking units, identify the most frequently and second most frequently used load (or operating) levels (*i.e.*, low, mid, or high) in accordance with section 6.5.2.1 of appendix A to this part, expressed in megawatts, thousands of lb/hr of steam, mmBtu/hr of thermal output, or ft/sec (as applicable);

(D) Except for peaking units, an indicator of whether the second most frequently used load (or operating) level is designated as normal in section 6.5.2.1 of appendix A to this part;

(E) The date of the data analysis used to determine the normal load (or operating) level(s) and the two most frequently-used load (or operating) levels (as applicable); and

(F) Activation and deactivation dates and hours, when the maximum hourly gross load, boundaries of the range of operation, normal load (or operating) level(s) or two most frequently-used load (or operating) levels change and are updated.

(viii) For each unit for which CEMS are not installed:

(A) Maximum hourly gross load (in MW, rounded to the nearest MW, or steam load in klb/hr, rounded to the nearest klb/hr, or steam load in mmBtu/hr, rounded to the nearest mmBtu/hr);

(B) The upper and lower boundaries of the range of operation (as defined in section 6.5.2.1 of appendix A to this part), expressed in megawatts, mmBtu/hr of thermal output, or thousands of lb/hr of steam;

(C) Except for peaking units and units using the low mass emissions excepted methodology under § 75.19, identify the load level designated as normal, pursuant to section 6.5.2.1 of appendix A to this part, expressed in megawatts, mmBtu/hr of thermal output, or thousands of lb/hr of steam;

(D) The date of the load analysis used to determine the normal load level (as applicable); and

(E) Activation and deactivation dates and hours, when the maximum hourly gross load, boundaries of the range of operation, or normal load level change and are updated.

(ix) For each unit with a flow monitor installed on a rectangular stack or duct, if a wall effects adjustment factor (WAF) is determined and applied to the hourly flow rate data:

(A) Stack or duct width at the test location, ft;

(B) Stack or duct depth at the test location, ft;

(C) Wall effects adjustment factor (WAF), to the nearest 0.0001;

(D) Method of determining the WAF;

(E) WAF Effective date and hour;

(F) WAF no longer effective date and hour (if applicable);

(G) WAF determination date;

(H) Number of WAF test runs;

(I) Number of Method 1 traverse points in the WAF test;

(J) Number of test ports in the WAF test; and

(K) Number of Method 1 traverse points in the reference flow RATA.

(2) *Hardcopy*. (i) Information, including (as applicable): Identification of the test strategy; protocol for the relative accuracy test audit; other relevant test information; calibration gas levels (percent of span) for the calibration error test and linearity check; calculations for determining maximum potential concentration, maximum expected concentration (if applicable), maximum potential flow rate, maximum potential NO_X emission rate, and span; and apportionment strategies under §§ 75.10 through 75.18.

(ii) Description of site locations for each monitoring component in the continuous emission or opacity monitoring systems, including schematic diagrams and engineering drawings specified in paragraphs (e)(2)(iv) and (e)(2)(v) of this section and any other documentation that demonstrates each monitor location meets the appropriate siting criteria.

(iii) A data flow diagram denoting the complete information handling path from output signals of CEMS components to final reports.

(iv) For units monitored by a continuous emission or opacity monitoring system, a schematic diagram identifying entire gas handling system from boiler to stack for all affected units, using identification numbers for units, monitoring systems and components, and stacks corresponding to the identification numbers provided in paragraphs (g)(1)(i) and (g)(1)(iii) of this section. The schematic diagram must depict stack height and the height of any monitor locations. Comprehensive and/or separate schematic diagrams shall be used to describe groups of units using a common stack.

(v) For units monitored by a continuous emission or opacity monitoring system, stack and duct engineering diagrams showing the dimensions and location of fans, turning vanes, air preheaters, monitor components, probes, reference method sampling ports, and other equipment that affects the monitoring system location, performance, or quality control checks.

(h) *Contents of monitoring plan for specific situations*. The following additional information shall be included in the monitoring plan for the specific situations described:

(1) For each gas-fired unit or oil-fired unit for which the owner or operator uses the optional protocol in appendix D to this part for estimating heat input and/or SO_2 mass emissions, or for each gas-fired or oil-fired peaking unit for which the owner/operator uses the optional protocol in appendix E to this part for estimating NO_X emission rate (using a fuel flowmeter), the designated representative shall include the following additional information for each fuel flowmeter system in the monitoring plan:

(i) *Electronic*. (A) Parameter monitored;

(B) Type of fuel measured, maximum fuel flow rate, units of measure, and basis of maximum fuel flow rate (*i.e.*, upper range value or unit maximum) for each fuel flowmeter;

(C) Test method used to check the accuracy of each fuel flowmeter;

(D) Monitoring system identification code;

(E) The method used to demonstrate that the unit qualifies for monthly GCV sampling or for daily or annual fuel sampling for sulfur content, as applicable; and

(F) Activation date/hour and (if applicable) inactivation date/hour for the fuel flowmeter system;

(ii) *Hardcopy*. (A) A schematic diagram identifying the relationship between the unit, all fuel supply lines, the fuel flowmeter(s), and the stack(s). The schematic diagram must depict the installation location of each fuel flowmeter and the fuel sampling location(s). Comprehensive and/or separate schematic diagrams shall be used to describe groups of units using a common pipe;

(B) For units using the optional default SO_2 emission rate for ''pipeline natural gas'' or ''natural gas'' in appendix D to this part, the information on the sulfur content of the gaseous fuel used to demonstrate compliance with either section 2.3.1.4 or 2.3.2.4 of appendix D to this part;

(C) For units using the 720 hour test under 2.3.6 of Appendix D of this part to determine the required sulfur sampling requirements, report the procedures and results of the test; and

(D) For units using the 720 hour test under 2.3.5 of Appendix D of this part to determine the appropriate fuel GCV sampling frequency, report the procedures used and the results of the test.

(2) For each gas-fired peaking unit and oil-fired peaking unit for which the owner or operator uses the optional procedures in appendix E to this part for estimating NO_X emission rate, the designated representative shall include in the monitoring plan:

(i) *Electronic*. Unit operating and capacity factor information demonstrating that the unit qualifies as a peaking unit, as defined in § 72.2 of this chapter for the current calendar year or ozone season, including: capacity factor data for three calendar years (or ozone seasons) as specified in the definition of peaking unit in § 72.2 of this chapter; the method of qualification used; and an indication of whether the data are actual or projected data.

(ii) *Hardcopy*. (A) A protocol containing methods used to perform the baseline or periodic NO_X emission test; and

(B) Unit operating parameters related to NO_X formation by the unit.

(3) For each gas-fired unit and diesel-fired unit or unit with a wet flue gas pollution control system for which the designated representative claims an opacity monitoring exemption under § 75.14, the designated representative shall include in the hardcopy monitoring plan the information specified under § 75.14(b), (c), or (d), demonstrating that the unit qualifies for the exemption.

(4) For each unit using the low mass emissions excepted methodology under § 75.19 the designated representative shall include the following additional information in the monitoring plan that accompanies the initial certification application:

(i) *Electronic*. For each low mass emissions unit, report the results of the analysis performed to qualify as a low mass emissions unit under § 75.19(c). This report will include either the previous three years actual or projected emissions. The following items should be included:

(A) Current calendar year of application;

(B) Type of qualification;

(C) Years one, two, and three;

(D) Annual and/or ozone season measured, estimated or projected NO_X mass emissions for years one, two, and three;

(E) Annual measured, estimated or projected SO_2 mass emissions (if applicable) for years one, two, and three; and

(F) Annual or ozone season operating hours for years one, two, and three.

(ii) *Hardcopy*. (A) A schematic diagram identifying the relationship between the unit, all fuel supply lines and tanks, any fuel flowmeter(s), and the stack(s). Comprehensive and/or separate schematic diagrams shall be used to describe groups of units using a common pipe;

(B) For units which use the long term fuel flow methodology under § 75.19(c)(3), the designated representative must provide a diagram of the fuel flow to each affected unit or group of units and describe in detail the procedures used to determine the long term fuel flow for a unit or group of units for each fuel combusted by the unit or group of units;

(C) A statement that the unit burns only gaseous fuel(s) and/or fuel oil and a list of the fuels that are burned or a statement that the unit is projected to

burn only gaseous fuel(s) and/or fuel oil and a list of the fuels that are projected to be burned;

(D) A statement that the unit meets the applicability requirements in §75.19(a) and (b); and

(E) Any unit historical actual, estimated and projected emissions data and calculated emissions data demonstrating that the affected unit qualifies as a low mass emissions unit under §75.19(a) and 75.19(b).

(5) For qualification as a gas-fired unit, as defined in §72.2 of this part, the designated representative shall include in the monitoring plan, in electronic format, the following: Current calendar year, fuel usage data for three calendar years (or ozone seasons) as specified in the definition of gas-fired in §72.2 of this part, the method of qualification used, and an indication of whether the data are actual or projected data.

(6) For each monitoring location with a stack flow monitor that is exempt from performing 3-load flow RATAs (peaking units, bypass stacks, or by petition) the designated representative shall include in the monitoring plan an indicator of exemption from 3-load flow RATA using the appropriate exemption code.

[58 FR 3701, Jan. 11, 1993, as amended at 60 FR 26532, 26568, May 17, 1995; 61 FR 59161, Nov. 20, 1996; 64 FR 28605, May 26, 1999; 67 FR 40440, June 12, 2002; 70 FR 28682, May 18, 2005; 73 FR 4350, Jan. 24, 2008]

§§ 75.54–75.56 [Reserved]

§ 75.57 General recordkeeping provisions.

The owner or operator shall meet all of the applicable recordkeeping requirements of this section.

(a) *Recordkeeping requirements for affected sources.* The owner or operator of any affected source subject to the requirements of this part shall maintain for each affected unit a file of all measurements, data, reports, and other information required by this part at the source in a form suitable for inspection for at least three (3) years from the date of each record. Unless otherwise provided, throughout this subpart the phrase ''for each affected unit'' also applies to each group of affected or non-affected units utilizing a common stack and common monitoring systems, pursuant to §§75.16 through 75.18, or utilizing a common pipe header and common fuel flowmeter, pursuant to section 2.1.2 of appendix D to this part. The file shall contain the following information:

(1) The data and information required in paragraphs (b) through (h) of this section, beginning with the earlier of the date of provisional certification or the deadline in §75.4(a), (b), or (c);

(2) The supporting data and information used to calculate values required in paragraphs (b) through (g) of this section, excluding the subhourly data points used to compute hourly averages under §75.10(d), beginning with the earlier of the date of provisional certification or the deadline in §75.4(a), (b), or (c);

(3) The data and information required in §75.58 for specific situations, beginning with the earlier of the date of provisional certification or the deadline in §75.4(a), (b), or (c);

(4) The certification test data and information required in §75.59 for tests required under §75.20, beginning with the date of the first certification test performed, the quality assurance and quality control data and information required in §75.59 for tests, and the quality assurance/quality control plan required under §75.21 and appendix B to this part, beginning with the date of provisional certification;

(5) The current monitoring plan as specified in §75.53, beginning with the initial submission required by §75.62; and

(6) The quality control plan as described in section 1 of appendix B to this part, beginning with the date of provisional certification.

(b) *Operating parameter record provisions.* The owner or operator shall record for each hour the following information on unit operating time, heat input rate, and load, separately for each affected unit and also for each group of units utilizing a common stack and a common monitoring system or utilizing a common pipe header and common fuel flowmeter:

(1) Date and hour;

(2) Unit operating time (rounded up to the nearest fraction of an hour (in

equal increments that can range from one hundredth to one quarter of an hour, at the option of the owner or operator));

(3) Hourly gross unit load (rounded to nearest MWge) (or steam load in 1000 lb/hr at stated temperature and pressure, rounded to the nearest 1000 lb/hr, or mmBtu/hr of thermal output, rounded to the nearest mmBtu/hr, if elected in the monitoring plan);

(4) Operating load range corresponding to hourly gross load of 1 to 10, except for units using a common stack or common pipe header, which may use up to 20 load ranges for stack or fuel flow, as specified in the monitoring plan;

(5) Hourly heat input rate (mmBtu/hr, rounded to the nearest tenth);

(6) Identification code for formula used for heat input, as provided in § 75.53; and

(7) For CEMS units only, F-factor for heat input calculation and indication of whether the diluent cap was used for heat input calculations for the hour.

(c) *SO_2 emission record provisions.* The owner or operator shall record for each hour the information required by this paragraph for each affected unit or group of units using a common stack and common monitoring systems, except as provided under § 75.11(e) or for a gas-fired or oil-fired unit for which the owner or operator is using the optional protocol in appendix D to this part or for a low mass emissions unit for which the owner or operator is using the optional low mass emissions methodology in § 75.19(c) for estimating SO_2 mass emissions:

(1) For SO_2 concentration during unit operation, as measured and reported from each certified primary monitor, certified back-up monitor, or other approved method of emissions determination:

(i) Component-system identification code, as provided in § 75.53;

(ii) Date and hour;

(iii) Hourly average SO_2 concentration (ppm, rounded to the nearest tenth);

(iv) Hourly average SO_2 concentration (ppm, rounded to the nearest tenth), adjusted for bias if bias adjustment factor is required, as provided in § 75.24(d);

(v) Percent monitor data availability (recorded to the nearest tenth of a percent), calculated pursuant to § 75.32; and

(vi) Method of determination for hourly average SO_2 concentration using Codes 1–55 in Table 4a of this section.

(2) For flow rate during unit operation, as measured and reported from each certified primary monitor, certified back-up monitor, or other approved method of emissions determination:

(i) Component-system identification code, as provided in § 75.53;

(ii) Date and hour;

(iii) Hourly average volumetric flow rate (in scfh, rounded to the nearest thousand);

(iv) Hourly average volumetric flow rate (in scfh, rounded to the nearest thousand), adjusted for bias if bias adjustment factor required, as provided in § 75.24(d);

(v) Percent monitor data availability (recorded to the nearest tenth of a percent) for the flow monitor, calculated pursuant to § 75.32; and

(vi) Method of determination for hourly average flow rate using Codes 1–55 in Table 4a of this section.

(3) For flue gas moisture content during unit operation (where SO_2 concentration is measured on a dry basis), as measured and reported from each certified primary monitor, certified back-up monitor, or other approved method of emissions determination:

(i) Component-system identification code, as provided in § 75.53;

(ii) Date and hour;

(iii) Hourly average moisture content of flue gas (percent, rounded to the nearest tenth). If the continuous moisture monitoring system consists of wet- and dry-basis oxygen analyzers, also record both the wet- and dry-basis oxygen hourly averages (in percent O_2, rounded to the nearest tenth);

(iv) Percent monitor data availability (recorded to the nearest tenth of a percent) for the moisture monitoring system, calculated pursuant to § 75.32; and

(v) Method of determination for hourly average moisture percentage, using Codes 1–55 in Table 4a of this section.

(4) For SO_2 mass emission rate during unit operation, as measured and reported from the certified primary monitoring system(s), certified redundant or non-redundant back-up monitoring system(s), or other approved method(s) of emissions determination:

(i) Date and hour;

(ii) Hourly SO_2 mass emission rate (lb/hr, rounded to the nearest tenth);

(iii) Hourly SO_2 mass emission rate (lb/hr, rounded to the nearest tenth), adjusted for bias if bias adjustment factor required, as provided in § 75.24(d); and

(iv) Identification code for emissions formula used to derive hourly SO_2 mass emission rate from SO_2 concentration and flow and (if applicable) moisture data in paragraphs (c)(1), (c)(2), and (c)(3) of this section, as provided in § 75.53.

TABLE 4A—CODES FOR METHOD OF EMISSIONS AND FLOW DETERMINATION

Code	Hourly emissions/flow measurement or estimation method
1	Certified primary emission/flow monitoring system.
2	Certified backup emission/flow monitoring system.
3	Approved alternative monitoring system.
4	Reference method: SO_2: Method 6C. Flow: Method 2 or its allowable alternatives under appendix A to part 60 of this chapter. NO_X: Method 7E. CO_2 or O_2: Method 3A.
5	For units with add-on SO_2 and/or NO_X emission controls: SO_2 concentration or NO_X emission rate estimate from Agency preapproved parametric monitoring method.
6	Average of the hourly SO_2 concentrations, CO_2 concentrations, O_2 concentrations, NO_X concentrations, flow rates, moisture percentages or NO_X emission rates for the hour before and the hour following a missing data period.
7	Initial missing data procedures used. Either: (a) the average of the hourly SO_2 concentration, CO_2 concentration, O_2 concentration, or moisture percentage for the hour before and the hour following a missing data period; or (b) the arithmetic average of all NO_X concentration, NO_X emission rate, or flow rate values at the corresponding load range (or a higher load range), or at the corresponding operational bin (non-load-based units, only); or (c) the arithmetic average of all previous NO_X concentration, NO_X emission rate, or flow rate values (non-load-based units, only).
8	90th percentile hourly SO_2 concentration, CO_2 concentration, NO_X concentration, flow rate, moisture percentage, or NO_X emission rate or 10th percentile hourly O_2 concentration or moisture percentage in the applicable lookback period (moisture missing data algorithm depends on which equations are used for emissions and heat input).
9	95th percentile hourly SO_2 concentration, CO_2 concentration, NO_X concentration, flow rate, moisture percentage, or NO_X emission rate or 5th percentile hourly O_2 concentration or moisture percentage in the applicable lookback period (moisture missing data algorithm depends on which equations are used for emissions and heat input).
10	Maximum hourly SO_2 concentration, CO_2 concentration, NO_X concentration, flow rate, moisture percentage, or NO_X emission rate or minimum hourly O_2 concentration or moisture percentage in the applicable lookback period (moisture missing data algorithm depends on which equations are used for emissions and heat input).
11	Average of hourly flow rates, NO_X concentrations or NO_X emission rates in corresponding load range, for the applicable lookback period. For non-load-based units, report either the average flow rate, NO_X concentration or NO_X emission rate in the applicable lookback period, or the average flow rate or NO_X value at the corresponding operational bin (if operational bins are used).
12	Maximum potential concentration of SO_2, maximum potential concentration of CO_2, maximum potential concentration of NO_X maximum potential flow rate, maximum potential NO_X emission rate, maximum potential moisture percentage, minimum potential O_2 concentration or minimum potential moisture percentage, as determined using § 72.2 of this chapter and section 2.1 of appendix A to this part (moisture missing data algorithm depends on which equations are used for emissions and heat input).
13	Maximum expected concentration of SO_2, maximum expected concentration of NO_X, maximum expected Hg concentration, or maximum controlled NO_X emission rate. (*See* § 75.34(a)(5)).
14	Diluent cap value (if the cap is replacing a CO_2 measurement, use 5.0 percent for boilers and 1.0 percent for turbines; if it is replacing an O_2 measurement, use 14.0 percent for boilers and 19.0 percent for turbines).
15	1.25 times the maximum hourly controlled SO_2 concentration, Hg concentration, NO_X concentration at the corresponding load or operational bin, or NO_X emission rate at the corresponding load or operational bin, in the applicable lookback period (*See* § 75.34(a)(5)).
16	SO_2 concentration value of 2.0 ppm during hours when only "very low sulfur fuel", as defined in § 72.2 of this chapter, is combusted.
17	Like-kind replacement non-redundant backup analyzer.
19	200 percent of the MPC; default high range value.
20	200 percent of the full-scale range setting (full-scale exceedance of high range).
21	Negative hourly CO_2 concentration, SO_2 concentration, NO_X concentration, percent moisture, or NO_X emission rate replaced with zero.
22	Hourly average SO_2 or NO_X concentration, measured by a certified monitor at the control device inlet (units with add-on emission controls only).

TABLE 4A—CODES FOR METHOD OF EMISSIONS AND FLOW DETERMINATION—Continued

Code	Hourly emissions/flow measurement or estimation method
23	Maximum potential SO_2 concentration, NO_X concentration, CO_2 concentration, NO_X emission rate or flow rate, or minimum potential O_2 concentration or moisture percentage, for an hour in which flue gases are discharged through an unmonitored bypass stack.
24	Maximum expected NO_X concentration, or maximum controlled NO_X emission rate for an hour in which flue gases are discharged downstream of the NO_X emission controls through an unmonitored bypass stack, and the add-on NO_X emission controls are confirmed to be operating properly.
25	Maximum potential NO_X emission rate (MER). (Use only when a NO_X concentration full-scale exceedance occurs and the diluent monitor is unavailable.)
26	1.0 mmBtu/hr substituted for Heat Input Rate for an operating hour in which the calculated Heat Input Rate is zero or negative.
32	Hourly Hg concentration determined from analysis of a single trap multiplied by a factor of 1.111 when one of the paired traps is invalidated or damaged (*See* Appendix K, section 8).
33	Hourly Hg concentration determined from the trap resulting in the higher Hg concentration when the relative deviation criterion for the paired traps is not met (*See* Appendix K, section 8).
40	Fuel specific default value (or prorated default value) used for the hour.
54	Other quality assured methodologies approved through petition. These hours are included in missing data lookback and are treated as unavailable hours for percent monitor availability calculations.
55	Other substitute data approved through petition. These hours are not included in missing data lookback and are treated as unavailable hours for percent monitor availability calculations.

(d) *NO_X emission record provisions*. The owner or operator shall record the applicable information required by this paragraph for each affected unit for each hour or partial hour during which the unit operates, except for a gas-fired peaking unit or oil-fired peaking unit for which the owner or operator is using the optional protocol in appendix E to this part or a low mass emissions unit for which the owner or operator is using the optional low mass emissions excepted methodology in § 75.19(c) for estimating NO_X emission rate. For each NO_X emission rate (in lb/mmBtu) measured by a NO_X-diluent monitoring system, or, if applicable, for each NO_X concentration (in ppm) measured by a NO_X concentration monitoring system used to calculate NO_X mass emissions under § 75.71(a)(2), record the following data as measured and reported from the certified primary monitor, certified back-up monitor, or other approved method of emissions determination:

(1) Component-system identification code, as provided in § 75.53 (including identification code for the moisture monitoring system, if applicable);

(2) Date and hour;

(3) Hourly average NO_X concentration (ppm, rounded to the nearest tenth) and hourly average NO_X concentration (ppm, rounded to the nearest tenth) adjusted for bias if bias adjustment factor required, as provided in § 75.24(d);

(4) Hourly average diluent gas concentration (for NO_X-diluent monitoring systems, only, in units of percent O_2 or percent CO_2, rounded to the nearest tenth);

(5) If applicable, the hourly average moisture content of the stack gas (percent H_2O, rounded to the nearest tenth). If the continuous moisture monitoring system consists of wet- and dry-basis oxygen analyzers, also record both the hourly wet- and dry-basis oxygen readings (in percent O_2, rounded to the nearest tenth);

(6) Hourly average NO_X emission rate (for NO_X-diluent monitoring systems only, in units of lb/mmBtu, rounded to the nearest thousandth);

(7) Hourly average NO_X emission rate (for NO_X-diluent monitoring systems only, in units of lb/mmBtu, rounded to the nearest thousandth), adjusted for bias if bias adjustment factor is required, as provided in § 75.24(d). The requirement to report hourly NO_X emission rates to the nearest thousandth shall not affect NO_X compliance determinations under part 76 of this chapter; compliance with each applicable emission limit under part 76 shall be determined to the nearest hundredth pound per million Btu;

(8) Percent monitoring system data availability (recorded to the nearest tenth of a percent), for the NO_X-diluent or NO_X concentration monitoring system, and, if applicable, for the moisture monitoring system, calculated pursuant to § 75.32;

(9) Method of determination for hourly average NO_X emission rate or NO_X concentration and (if applicable) for

the hourly average moisture percentage, using Codes 1–55 in Table 4a of this section; and

(10) Identification codes for emissions formulas used to derive hourly average NO_X emission rate and total NO_X mass emissions, as provided in § 75.53, and (if applicable) the F-factor used to convert NO_X concentrations into emission rates.

(e) *CO_2 emission record provisions.* Except for a low mass emissions unit for which the owner or operator is using the optional low mass emissions excepted methodology in § 75.19(c) for estimating CO_2 mass emissions, the owner or operator shall record or calculate CO_2 emissions for each affected unit using one of the following methods specified in this section:

(1) If the owner or operator chooses to use a CO_2 CEMS (including an O_2 monitor and flow monitor, as specified in appendix F to this part), then the owner or operator shall record for each hour or partial hour during which the unit operates the following information for CO_2 mass emissions, as measured and reported from the certified primary monitor, certified back-up monitor, or other approved method of emissions determination:

(i) Component-system identification code, as provided in § 75.53 (including identification code for the moisture monitoring system, if applicable);

(ii) Date and hour;

(iii) Hourly average CO_2 concentration (in percent, rounded to the nearest tenth);

(iv) Hourly average volumetric flow rate (scfh, rounded to the nearest thousand scfh);

(v) Hourly average moisture content of flue gas (percent, rounded to the nearest tenth), where CO_2 concentration is measured on a dry basis. If the continuous moisture monitoring system consists of wet- and dry-basis oxygen analyzers, also record both the hourly wet- and dry-basis oxygen readings (in percent O_2, rounded to the nearest tenth);

(vi) Hourly average CO_2 mass emission rate (tons/hr, rounded to the nearest tenth);

(vii) Percent monitor data availability for both the CO_2 monitoring system and, if applicable, the moisture monitoring system (recorded to the nearest tenth of a percent), calculated pursuant to § 75.32;

(viii) Method of determination for hourly average CO_2 mass emission rate and hourly average CO_2 concentration, and, if applicable, for the hourly average moisture percentage, using Codes 1–55 in Table 4a of this section;

(ix) Identification code for emissions formula used to derive hourly average CO_2 mass emission rate, as provided in § 75.53; and

(x) Indication of whether the diluent cap was used for CO_2 calculation for the hour.

(2) As an alternative to paragraph (e)(1) of this section, the owner or operator may use the procedures in § 75.13 and in appendix G to this part, and shall record daily the following information for CO_2 mass emissions:

(i) Date;

(ii) Daily combustion-formed CO_2 mass emissions (tons/day, rounded to the nearest tenth);

(iii) For coal-fired units, flag indicating whether optional procedure to adjust combustion-formed CO_2 mass emissions for carbon retained in flyash has been used and, if so, the adjustment;

(iv) For a unit with a wet flue gas desulfurization system or other controls generating CO_2, daily sorbent-related CO_2 mass emissions (tons/day, rounded to the nearest tenth); and

(v) For a unit with a wet flue gas desulfurization system or other controls generating CO_2, total daily CO_2 mass emissions (tons/day, rounded to the nearest tenth) as the sum of combustion-formed emissions and sorbent-related emissions.

(f) *Opacity records.* The owner or operator shall record opacity data as specified by the State or local air pollution control agency. If the State or local air pollution control agency does not specify recordkeeping requirements for opacity, then record the information required by paragraphs (f) (1) through (5) of this section for each affected unit, except as provided in §§ 75.14(b), (c), and (d). The owner or operator shall also keep records of all incidents of opacity monitor downtime during unit operation, including reason(s) for

the monitor outage(s) and any corrective action(s) taken for opacity, as measured and reported by the continuous opacity monitoring system:

(1) Component/system identification code;

(2) Date, hour, and minute;

(3) Average opacity of emissions for each six minute averaging period (in percent opacity);

(4) If the average opacity of emissions exceeds the applicable standard, then a code indicating such an exceedance has occurred; and

(5) Percent monitor data availability (recorded to the nearest tenth of a percent), calculated according to the requirements of the procedure recommended for State Implementation Plans in appendix M to part 51 of this chapter.

(g) *Diluent record provisions.* The owner or operator of a unit using a flow monitor and an O_2 diluent monitor to determine heat input, in accordance with Equation F–17 or F–18 of appendix F to this part, or a unit that accounts for heat input using a flow monitor and a CO_2 diluent monitor (which is used only for heat input determination and is not used as a CO_2 pollutant concentration monitor) shall keep the following records for the O_2 or CO_2 diluent monitor:

(1) Component-system identification code, as provided in § 75.53;

(2) Date and hour;

(3) Hourly average diluent gas (O_2 or CO_2) concentration (in percent, rounded to the nearest tenth);

(4) Percent monitor data availability for the diluent monitor (recorded to the nearest tenth of a percent), calculated pursuant to § 75.32; and

(5) Method of determination code for diluent gas (O_2 or CO_2) concentration data using Codes 1–55, in Table 4a of this section.

(h) *Missing data records.* The owner or operator shall record the causes of any missing data periods and the actions taken by the owner or operator to correct such causes.

(i) *Hg emission record provisions (CEMS).* The owner or operator shall record for each hour the information required by this paragraph for each affected unit using Hg CEMS in combination with flow rate, and (in certain cases) moisture, and diluent gas monitors, to determine Hg mass emissions and (if applicable) unit heat input under a State or Federal Hg mass emissions reduction program that adopts the requirements of subpart I of this part.

(1) For Hg concentration during unit operation, as measured and reported from each certified primary monitor, certified back-up monitor, or other approved method of emissions determination:

(i) Component-system identification code, as provided in § 75.53;

(ii) Date and hour;

(iii) Hourly Hg concentration (μgm/scm, rounded to the nearest tenth). For a particular pair of sorbent traps, this will be the flow-proportional average concentration for the data collection period;

(iv) The bias-adjusted hourly average Hg concentration (μgm/scm, rounded to the nearest tenth) if a bias adjustment factor is required, as provided in § 75.24(d);

(v) Method of determination for hourly Hg concentration using Codes 1–55 in Table 4a of this section; and

(vi) The percent monitor data availability (to the nearest tenth of a percent), calculated pursuant to § 75.32.

(2) For flue gas moisture content during unit operation (if required), as measured and reported from each certified primary monitor, certified back-up monitor, or other approved method of emissions determination (except where a default moisture value is used in accordance with § 75.11(b), or approved under § 75.66):

(i) Component-system identification code, as provided in § 75.53;

(ii) Date and hour;

(iii) Hourly average moisture content of flue gas (percent, rounded to the nearest tenth). If the continuous moisture monitoring system consists of wet- and dry-basis oxygen analyzers, also record both the wet- and dry-basis oxygen hourly averages (in percent O_2, rounded to the nearest tenth);

(iv) Percent monitor data availability (recorded to the nearest tenth of a percent) for the moisture monitoring system, calculated pursuant to § 75.32; and

(v) Method of determination for hourly average moisture percentage, using Codes 1–55 in Table 4a of this section.

(3) For diluent gas (O_2 or CO_2) concentration during unit operation (if required), as measured and reported from each certified primary monitor, certified back-up monitor, or other approved method of emissions determination:

(i) Component-system identification code, as provided in § 75.53;

(ii) Date and hour;

(iii) Hourly average diluent gas (O_2 or CO_2) concentration (in percent, rounded to the nearest tenth);

(iv) Method of determination code for diluent gas (O_2 or CO_2) concentration data using Codes 1–55, in Table 4a of this section; and

(v) The percent monitor data availability (to the nearest tenth of a percent) for the O_2 or CO_2 monitoring system (if a separate O_2 or CO_2 monitoring system is used for heat input determination), calculated pursuant to § 75.32.

(4) For stack gas volumetric flow rate during unit operation, as measured and reported from each certified primary monitor, certified back-up monitor, or other approved method of emissions determination, record the information required under paragraphs (c)(2)(i) through (c)(2)(vi) of this section.

(5) For Hg mass emissions during unit operation, as measured and reported from the certified primary monitoring system(s), certified redundant or non-redundant back-up monitoring system(s), or other approved method(s) of emissions determination:

(i) Date and hour;

(ii) Hourly Hg mass emissions (ounces, rounded to three decimal places);

(iii) Hourly Hg mass emissions (ounces, rounded to three decimal places), adjusted for bias if a bias adjustment factor is required, as provided in § 75.24(d); and

(iv) Identification code for emissions formula used to derive hourly Hg mass emissions from Hg concentration, flow rate and moisture data, as provided in § 75.53.

(j) *Hg emission record provisions (sorbent trap systems).* The owner or operator shall record for each hour the information required by this paragraph, for each affected unit using sorbent trap monitoring systems in combination with flow rate, moisture, and (in certain cases) diluent gas monitors, to determine Hg mass emissions and (if required) unit heat input under a State or Federal Hg mass emissions reduction program that adopts the requirements of subpart I of this part.

(1) For Hg concentration during unit operation, as measured and reported from each certified primary monitor, certified back-up monitor, or other approved method of emissions determination:

(i) Component-system identification code, as provided in § 75.53;

(ii) Date and hour;

(iii) Hourly Hg concentration (μgm/dscm, rounded to the nearest tenth). For a particular pair of sorbent traps, this will be the flow-proportional average concentration for the data collection period;

(iv) The bias-adjusted hourly average Hg concentration (μgm/dscm, rounded to the nearest tenth) if a bias adjustment factor is required, as provided in § 75.24(d);

(v) Method of determination for hourly average Hg concentration using Codes 1–55 in Table 4a of this section; and

(vi) Percent monitor data availability (recorded to the nearest tenth of a percent), calculated pursuant to § 75.32;

(2) For flue gas moisture content during unit operation, as measured and reported from each certified primary monitor, certified back-up monitor, or other approved method of emissions determination (except where a default moisture value is used in accordance with § 75.11(b), or approved under § 75.66), record the information required under paragraphs (i)(2)(i) through (i)(2)(v) of this section;

(3) For diluent gas (O_2 or CO_2) concentration during unit operation (if required for heat input determination), record the information required under paragraphs (i)(3)(i) through (i)(3)(v) of this section.

(4) For stack gas volumetric flow rate during unit operation, as measured and reported from each certified

primary monitor, certified back-up monitor, or other approved method of emissions determination, record the information required under paragraphs (c)(2)(i) through (c)(2)(vi) of this section.

(5) For Hg mass emissions during unit operation, as measured and reported from the certified primary monitoring system(s), certified redundant or non-redundant back-up monitoring system(s), or other approved method(s) of emissions determination, record the information required under paragraph (i)(5) of this section.

(6) Record the average flow rate of stack gas through each sorbent trap (in appropriate units, *e.g.*, liters/min, cc/min, dscm/min).

(7) Record the gas flow meter reading (in dscm, rounded to the nearest hundreth) at the beginning and end of the collection period and at least once in each unit operating hour during the collection period.

(8) Calculate and record the ratio of the bias-adjusted stack gas flow rate to the sample flow rate, as described in section 11.2 of appendix K to this part.

[64 FR 28609, May 26, 1999; 64 FR 37582, July 12, 1999; 67 FR 40440, June 12, 2002; 70 FR 28682, May 18, 2005; 72 FR 51528, Sept. 7, 2007; 73 FR 4353, Jan. 24, 2008]

§ 75.58 General recordkeeping provisions for specific situations.

The owner or operator shall meet all of the applicable recordkeeping requirements of this section.

(a) [Reserved]

(b) *Specific parametric data record provisions for calculating substitute emissions data for units with add-on emission controls.* In accordance with § 75.34, the owner or operator of an affected unit with add-on emission controls shall either record the applicable information in paragraph (b)(3) of this section for each hour of missing SO_2 concentration data or NO_X emission rate (in addition to other information), or shall record the information in paragraph (b)(1) of this section for SO_2 or paragraph (b)(2) of this section for NO_X through an automated data acquisition and handling system, as appropriate to the type of add-on emission controls:

(1) For units with add-on SO_2 emission controls using the optional parametric monitoring procedures in appendix C to this part, for each hour of missing SO_2 concentration or volumetric flow data:

(i) The information required in § 75.57(c) for SO_2 concentration and volumetric flow, if either one of these monitors is still operating;

(ii) Date and hour;

(iii) Number of operating scrubber modules;

(iv) Total feedrate of slurry to each operating scrubber module (gal/min);

(v) Pressure differential across each operating scrubber module (inches of water column);

(vi) For a unit with a wet flue gas desulfurization system, an in-line measure of absorber pH for each operating scrubber module;

(vii) For a unit with a dry flue gas desulfurization system, the inlet and outlet temperatures across each operating scrubber module;

(viii) For a unit with a wet flue gas desulfurization system, the percent solids in slurry for each scrubber module;

(ix) For a unit with a dry flue gas desulfurization system, the slurry feed rate (gal/min) to the atomizer nozzle;

(x) For a unit with SO_2 add-on emission controls other than wet or dry limestone, corresponding parameters approved by the Administrator;

(xi) Method of determination of SO_2 concentration and volumetric flow using Codes 1–55 in Table 4a of § 75.57; and

(xii) Inlet and outlet SO_2 concentration values, recorded by an SO_2 continuous emission monitoring system, and the removal efficiency of the add-on emission controls.

(2) For units with add-on NO_X emission controls using the optional parametric monitoring procedures in appendix C to this part, for each hour of missing NO_X emission rate data:

(i) Date and hour;

(ii) Inlet air flow rate (scfh, rounded to the nearest thousand);

(iii) Excess O_2 concentration of flue gas at stack outlet (percent, rounded to the nearest tenth of a percent);

(iv) Carbon monoxide concentration of flue gas at stack outlet (ppm, rounded to the nearest tenth);

(v) Temperature of flue gas at furnace exit or economizer outlet duct (°F);

(vi) Other parameters specific to NO_X emission controls (e.g., average hourly reagent feedrate);

(vii) Method of determination of NO_X emission rate using Codes 1–55 in Table 4a of § 75.57; and

(viii) Inlet and outlet NO_X emission rate values recorded by a NO_X continuous emission monitoring system and the removal efficiency of the add-on emission controls.

(3) Except as otherwise provided in § 75.34(d), for units with add-on SO_2 or NO_X emission controls following the provisions of § 75.34(a)(1), (a)(2), (a)(3) or (a)(5), and for units with add-on Hg emission controls, the owner or operator shall record:

(i) Parametric data which demonstrate, for each hour of missing SO_2, Hg, or NO_X emission data, the proper operation of the add-on emission controls, as described in the quality assurance/quality control program for the unit. The parametric data shall be maintained on site and shall be submitted, upon request, to the Administrator, EPA Regional office, State, or local agency. Alternatively, for units equipped with flue gas desulfurization (FGD) systems, the owner or operator may use quality-assured data from a certified SO_2 monitor to demonstrate proper operation of the emission controls during periods of missing Hg data;

(ii) A flag indicating, for each hour of missing SO_2, Hg, or NO_X emission data, either that the add-on emission controls are operating properly, as evidenced by all parameters being within the ranges specified in the quality assurance/quality control program, or that the add-on emission controls are not operating properly;

(c) *Specific SO_2 emission record provisions for gas-fired or oil-fired units using optional protocol in appendix D to this part.* In lieu of recording the information in § 75.57(c), the owner or operator shall record the applicable information in this paragraph for each affected gas-fired or oil-fired unit for which the owner or operator is using the optional protocol in appendix D to this part for estimating SO_2 mass emissions:

(1) For each hour when the unit is combusting oil:

(i) Date and hour;

(ii) Hourly average volumetric flow rate of oil, while the unit combusts oil, with the units in which oil flow is recorded (gal/hr, scf/hr, m^3/hr, or bbl/hr, rounded to the nearest tenth) (flag value if derived from missing data procedures);

(iii) Sulfur content of oil sample used to determine SO_2 mass emission rate (rounded to nearest hundredth for diesel fuel or to the nearest tenth of a percent for other fuel oil) (flag value if derived from missing data procedures);

(iv) [Reserved];

(v) Mass flow rate of oil combusted each hour and method of determination (lb/hr, rounded to the nearest tenth) (flag value if derived from missing data procedures);

(vi) SO_2 mass emission rate from oil (lb/hr, rounded to the nearest tenth);

(vii) For units using volumetric oil flowmeters, density of oil with the units in which oil density is recorded and method of determination (flag value if derived from missing data procedures);

(viii) Gross calorific value of oil used to determine heat input and method of determination (Btu/lb) (flag value if derived from missing data procedures);

(ix) Hourly heat input rate from oil, according to procedures in appendix D to this part (mmBtu/hr, to the nearest tenth);

(x) Fuel usage time for combustion of oil during the hour (rounded up to the nearest fraction of an hour (in equal increments that can range from one hundredth to one quarter of an hour, at the option of the owner or operator)) (flag to indicate multiple/single fuel types combusted);

(xi) Monitoring system identification code;

(xii) Operating load range corresponding to gross unit load (01–20);

(xiii) Type of oil combusted; and

(xiv) Heat input formula ID and SO_2 Formula ID (required beginning January 1, 2009).

(2) For gas-fired units or oil-fired units using the optional protocol in appendix D to this part for daily manual oil sampling, when the unit is combusting oil, the highest sulfur content

recorded from the most recent 30 daily oil samples (rounded to the nearest tenth of a percent).

(3) For gas-fired units or oil-fired units using the optional protocol in appendix D to this part, when either an assumed oil sulfur content or density value is used, or when as-delivered oil sampling is performed:

(i) Record the measured sulfur content, gross calorific value, and, if applicable, density from each fuel sample; and

(ii) Record and report the assumed sulfur content, gross calorific value, and, if applicable, density used to calculate SO_2 mass emission rate or heat input rate.

(4) For each hour when the unit is combusting gaseous fuel:

(i) Date and hour.

(ii) Hourly heat input rate from gaseous fuel, according to procedures in appendix F to this part (mmBtu/hr, rounded to the nearest tenth).

(iii) Sulfur content or SO_2 emission rate, in one of the following formats, in accordance with the appropriate procedure from appendix D to this part:

(A) Sulfur content of gas sample and method of determination (rounded to the nearest 0.1 grains/100 scf) (flag value if derived from missing data procedures); or

(B) Default SO_2 emission rate of 0.0006 lb/mmBtu for pipeline natural gas, or calculated SO_2 emission rate for natural gas from section 2.3.2.1.1 of appendix D to this part.

(iv) Hourly flow rate of gaseous fuel, while the unit combusts gas (100 scfh) and source of data code for gas flow rate.

(v) Gross calorific value of gaseous fuel used to determine heat input rate (Btu/100 scf) (flag value if derived from missing data procedures).

(vi) SO_2 mass emission rate due to the combustion of gaseous fuels (lb/hr).

(vii) Fuel usage time for combustion of gaseous fuel during the hour (rounded up to the nearest fraction of an hour (in equal increments that can range from one hundredth to one quarter of an hour, at the option of the owner or operator)) (flag to indicate multiple/single fuel types combusted).

(viii) Monitoring system identification code.

(ix) Operating load range corresponding to gross unit load (01–20).

(x) Type of gas combusted; and

(xi) Heat input formula ID and SO_2 Formula ID (required beginning January 1, 2009).

(5) For each oil sample or sample of diesel fuel:

(i) Date of sampling;

(ii) Sulfur content (percent, rounded to either the nearest hundredth, or nearest ten-thousandth for diesel fuels and to the nearest tenth for other fuel oil);

(iii) Gross calorific value (Btu/lb); and

(iv) Density or specific gravity, if required to convert volume to mass.

(6) For each sample of gaseous fuel for sulfur content:

(i) Date of sampling; and

(ii) Sulfur content (grains/100 scf, rounded to the nearest tenth).

(7) For each sample of gaseous fuel for gross calorific value:

(i) Date of sampling; and

(ii) Gross calorific value (Btu/100 scf).

(8) For each oil sample or sample of gaseous fuel:

(i) Type of oil or gas; and

(ii) Type of sulfur sampling (using codes in tables D–4 and D–5 of appendix D to this part) and value used in calculations, and type of GCV or density sampling (using codes in tables D–4 and D–5 of appendix D to this part).

(d) *Specific NO_X emission record provisions for gas-fired peaking units or oil-fired peaking units using optional protocol in appendix E to this part.* In lieu of recording the information in § 75.57(d), the owner or operator shall record the applicable information in this paragraph for each affected gas-fired peaking unit or oil-fired peaking unit for which the owner or operator is using the optional protocol in appendix E to this part for estimating NO_X emission rate. The owner or operator shall meet the requirements of this section, except that the requirements under paragraphs (d)(1)(vii) and (d)(2)(vii) of this section shall become applicable on the date on which the owner or operator is required to monitor, record, and report NO_X mass emissions under an applicable State or federal NO_X mass emission reduction program, if the provisions of

subpart H of this part are adopted as requirements under such a program.

(1) For each hour when the unit is combusting oil:

(i) Date and hour;

(ii) Hourly average mass flow rate of oil while the unit combusts oil with the units in which oil flow is recorded (lb/hr);

(iii) Gross calorific value of oil used to determine heat input (Btu/lb);

(iv) Hourly average NO_X emission rate from combustion of oil (lb/mmBtu, rounded to the nearest hundredth);

(v) Heat input rate of oil (mmBtu/hr, rounded to the nearest tenth);

(vi) Fuel usage time for combustion of oil during the hour (rounded up to the nearest fraction of an hour, in equal increments that can range from one hundredth to one quarter of an hour, at the option of the owner or operator);

(vii) NO_X mass emissions, calculated in accordance with section 8.1 of appendix F to this part;

(viii) NO_X monitoring system identification code;

(ix) Fuel flow monitoring system identification code;

(x) Segment identification of the correlation curve; and

(xi) Heat input rate formula ID (required beginning January 1, 2009).

(2) For each hour when the unit is combusting gaseous fuel:

(i) Date and hour;

(ii) Hourly average fuel flow rate of gaseous fuel, while the unit combusts gas (100 scfh);

(iii) Gross calorific value of gaseous fuel used to determine heat input (Btu/100 scf) (flag value if derived from missing data procedures);

(iv) Hourly average NO_X emission rate from combustion of gaseous fuel (lb/mmBtu, rounded to nearest hundredth);

(v) Heat input rate from gaseous fuel, while the unit combusts gas (mmBtu/hr, rounded to the nearest tenth);

(vi) Fuel usage time for combustion of gaseous fuel during the hour (rounded up to the nearest fraction of an hour, in equal increments that can range from one hundredth to one quarter of an hour, at the option of the owner or operator);

(vii) NO_X mass emissions, calculated in accordance with section 8.1 of appendix F to this part;

(viii) NO_X monitoring system identification code;

(ix) Fuel flow monitoring system identification code;

(x) Segment identification of the correlation curve; and

(xi) Heat input rate formula ID (required beginning January 1, 2009).

(3) For each hour when the unit combusts multiple fuels:

(i) Date and hour;

(ii) Hourly average heat input rate from all fuels (mmBtu/hr, rounded to the nearest tenth); and

(iii) Hourly average NO_X emission rate for the unit for all fuels (lb/mmBtu, rounded to the nearest hundredth).

(4) For each hour when the unit combusts any fuel(s):

(i) For stationary gas turbines and diesel or dual-fuel reciprocating engines, hourly averages of operating parameters under section 2.3 of appendix E to this part (flag if value is outside of manufacturer's recommended range); and

(ii) For boilers, hourly average boiler O_2 reading (percent, rounded to the nearest tenth) (flag if value exceeds by more than 2 percentage points the O_2 level recorded at the same heat input during the previous NO_X emission rate test).

(5) For each fuel sample:

(i) Date of sampling;

(ii) Gross calorific value (Btu/lb for oil, Btu/100 scf for gaseous fuel); and

(iii) Density or specific gravity, if required to convert volume to mass.

(6) Flag to indicate multiple or single fuels combusted.

(e) *Specific SO_2 emission record provisions during the combustion of gaseous fuel.* (1) If SO_2 emissions are determined in accordance with the provisions in §75.11(e)(2) during hours in which only gaseous fuel is combusted in a unit with an SO_2 CEMS, the owner or operator shall record the information in paragraph (c)(3) of this section in lieu of the information in §§75.57(c)(1), (c)(3), and (c)(4), for those hours.

(2) The provisions of this paragraph apply to a unit which, in accordance

with the provisions of § 75.11(e)(3), uses an SO_2 CEMS to determine SO_2 emissions during hours in which only gaseous fuel is combusted in the unit. If the unit sometimes burns only gaseous fuel that is very low sulfur fuel (as defined in § 72.2 of this chapter) as a primary and/or backup fuel and at other times combusts higher sulfur fuels, such as coal or oil, as primary and/or backup fuel(s), then the owner or operator shall keep records on-site, in a form suitable for inspection, of the type(s) of fuel(s) burned during each period of missing SO_2 data and the number of hours that each type of fuel was combusted in the unit during each missing data period. This recordkeeping requirement does not apply to an affected unit that burns very low sulfur fuel exclusively, nor does it apply to a unit that burns such gaseous fuel(s) only during unit startup.

(f) *Specific SO_2, NO_X, and CO_2 record provisions for gas-fired or oil-fired units using the optional low mass emissions excepted methodology in § 75.19.* In lieu of recording the information in §§ 75.57(b) through (e), the owner or operator shall record the following information for each affected low mass emissions unit for which the owner or operator is using the optional low mass emissions excepted methodology in § 75.19(c):

(1) All low mass emission units shall report for each hour:

(i) Date and hour;

(ii) Unit operating time (units using the long term fuel flow methodology report operating time to be 1);

(iii) Fuel type (pipeline natural gas, natural gas, other gaseous fuel, residual oil, or diesel fuel). If more than one type of fuel is combusted in the hour, either:

(A) Indicate the fuel type which results in the highest emission factors for NO_X (this option is in effect through December 31, 2008); or

(B) Indicate the fuel type resulting in the highest emission factor for each parameter (SO_2, NO_X emission rate, and CO_2) separately (this option is required on and after January 1, 2009);

(iv) Average hourly NO_X emission rate (lb/mmBtu, rounded to the nearest thousandth);

(v) Hourly NO_X mass emissions (lbs, rounded to the nearest tenth);

(vi) Hourly SO_2 mass emissions (lbs, rounded to the nearest tenth);

(vii) Hourly CO_2 mass emissions (tons, rounded to the nearest tenth);

(viii) Hourly calculated unit heat input in mmBtu;

(ix) Hourly unit output in gross load or steam load;

(x) The method of determining hourly heat input: unit maximum rated heat input, unit long term fuel flow or group long term fuel flow;

(xi) The method of determining NO_X emission rate used for the hour: default based on fuel combusted, unit specific default based on testing or historical data, group default based on representative testing of identical units, unit specific based on testing of a unit with NO_X controls operating, or missing data value;

(xii) Control status of the unit; and

(xiii) Base or peak load indicator (as applicable); and

(xiv) Multiple fuel flag.

(2) Low mass emission units using the optional long term fuel flow methodology to determine unit heat input shall report for each quarter:

(i) Type of fuel;

(ii) Beginning date and hour of long term fuel flow measurement period;

(iii) End date and hour of long term fuel flow period;

(iv) Quantity of fuel measured;

(v) Units of measure;

(vi) Fuel GCV value used to calculate heat input;

(vii) Units of GCV;

(viii) Method of determining fuel GCV used;

(ix) Method of determining fuel flow over period;

(x) Monitoring-system identification code;

(xi) Quarter and year;

(xii) Total heat input (mmBtu); and

(xiii) Operating hours in period.

[64 FR 28612, May 26, 1999, as amended at 67 FR 40441, 40442, June 12, 2002; 70 FR 28683, May 18, 2005; 73 FR 4354, Jan. 24, 2008]

§ 75.59 Certification, quality assurance, and quality control record provisions.

The owner or operator shall meet all of the applicable recordkeeping requirements of this section.

(a) *Continuous emission or opacity monitoring systems.* The owner or operator shall record the applicable information in this section for each certified monitor or certified monitoring system (including certified backup monitors) measuring and recording emissions or flow from an affected unit.

(1) For each SO_2 or NO_X pollutant concentration monitor, flow monitor, CO_2 emissions concentration monitor (including O_2 monitors used to determine CO_2 emissions), Hg monitor, or diluent gas monitor (including wet- and dry-basis O_2 monitors used to determine percent moisture), the owner or operator shall record the following for all daily and 7-day calibration error tests, all daily system integrity checks (Hg monitors, only), and all off-line calibration demonstrations, including any follow-up tests after corrective action:

(i) Component-system identification code (on and after January 1, 2009, only the component identification code is required);

(ii) Instrument span and span scale;

(iii) Date and hour;

(iv) Reference value (*i.e.*, calibration gas concentration or reference signal value, in ppm or other appropriate units);

(v) Observed value (monitor response during calibration, in ppm or other appropriate units);

(vi) Percent calibration error (rounded to the nearest tenth of a percent) (flag if using alternative performance specification for low emitters or differential pressure flow monitors);

(vii) Reference signal or calibration gas level;

(viii) For 7-day calibration error tests, a test number and reason for test;

(ix) For 7-day calibration tests for certification or recertification, a certification from the cylinder gas vendor or CEMS vendor that calibration gas, as defined in § 72.2 of this chapter and appendix A to this part, was used to conduct calibration error testing;

(x) Description of any adjustments, corrective actions, or maintenance prior to a passed test or following a failed test; and

(xi) Indication of whether the unit is off-line or on-line.

(2) For each flow monitor, the owner or operator shall record the following for all daily interference checks, including any follow-up tests after corrective action.

(i) Component-system identification code (after January 1, 2009, only the component identification code is required);

(ii) Date and hour;

(iii) Code indicating whether monitor passes or fails the interference check; and

(iv) Description of any adjustments, corrective actions, or maintenance prior to a passed test or following a failed test.

(3) For each SO_2 or NO_X pollutant concentration monitor, CO_2 emissions concentration monitor (including O_2 monitors used to determine CO_2 emissions), Hg concentration monitor, or diluent gas monitor (including wet- and dry-basis O_2 monitors used to determine percent moisture), the owner or operator shall record the following for the initial and all subsequent linearity check(s) and 3-level system integrity checks (Hg monitors with converters, only), including any follow-up tests after corrective action:

(i) Component-system identification code (on and after January 1, 2009, only the component identification code is required);

(ii) Instrument span and span scale (only span scale is required on and after January 1, 2009);

(iii) Calibration gas level;

(iv) Date and time (hour and minute) of each gas injection at each calibration gas level;

(v) Reference value (*i.e.*, reference gas concentration for each gas injection at each calibration gas level, in ppm or other appropriate units);

(vi) Observed value (monitor response to each reference gas injection at each calibration gas level, in ppm or other appropriate units);

(vii) Mean of reference values and mean of measured values at each calibration gas level;

(viii) Linearity error at each of the reference gas concentrations (rounded to nearest tenth of a percent) (flag if using alternative performance specification);

(ix) Test number and reason for test (flag if aborted test); and

(x) Description of any adjustments, corrective action, or maintenance prior to a passed test or following a failed test.

(4) For each differential pressure type flow monitor, the owner or operator shall record items in paragraphs (a)(4)(i) through (v) of this section, for all quarterly leak checks, including any follow-up tests after corrective action. For each flow monitor, the owner or operator shall record items in paragraphs (a)(4) (vi) and (vii) for all flow-to-load ratio and gross heat rate tests:

(i) Component-system identification code (on and after January 1, 2009, only the system identification code is required).

(ii) Date and hour.

(iii) Reason for test.

(iv) Code indicating whether monitor passes or fails the quarterly leak check.

(v) Description of any adjustments, corrective actions, or maintenance prior to a passed test or following a failed test.

(vi) Test data from the flow-to-load ratio or gross heat rate (GHR) evaluation, including:

(A) Monitoring system identification code;

(B) Calendar year and quarter;

(C) Indication of whether the test is a flow-to-load ratio or gross heat rate evaluation;

(D) Indication of whether bias adjusted flow rates were used;

(E) Average absolute percent difference between reference ratio (or GHR) and hourly ratios (or GHR values);

(F) Test result;

(G) Number of hours used in final quarterly average;

(H) Number of hours exempted for use of a different fuel type;

(I) Number of hours exempted for load ramping up or down;

(J) Number of hours exempted for scrubber bypass;

(K) Number of hours exempted for hours preceding a normal-load flow RATA;

(L) Number of hours exempted for hours preceding a successful diagnostic test, following a documented monitor repair or major component replacement;

(M) Number of hours excluded for flue gases discharging simultaneously thorough a main stack and a bypass stack; and

(N) Test number.

(vii) Reference data for the flow-to-load ratio or gross heat rate evaluation, including (as applicable):

(A) Reference flow RATA end date and time;

(B) Test number of the reference RATA;

(C) Reference RATA load and load level;

(D) Average reference method flow rate during reference flow RATA;

(E) Reference flow/load ratio;

(F) Average reference method diluent gas concentration during flow RATA and diluent gas units of measure;

(G) Fuel specific F_d -or F_c-factor during flow RATA and F-factor units of measure;

(H) Reference gross heat rate value;

(I) Monitoring system identification code;

(J) Average hourly heat input rate during RATA;

(K) Average gross unit load;

(L) Operating load level; and

(M) An indicator (''flag'') if separate reference ratios are calculated for each multiple stack.

(5) For each SO_2 pollutant concentration monitor, flow monitor, each CO_2 emissions concentration monitor (including any O_2 concentration monitor used to determine CO_2 mass emissions or heat input), each NO_X-diluent continuous emission monitoring system, each NO_X concentration monitoring system, each diluent gas (O_2 or CO_2) monitor used to determine heat input, each moisture monitoring system, each Hg concentration monitoring system, each sorbent trap monitoring system, and each approved alternative monitoring system, the owner or operator shall record the following information for the initial and all subsequent relative accuracy test audits:

(i) Reference method(s) used.

(ii) Individual test run data from the relative accuracy test audit for the SO_2 concentration monitor, flow monitor, CO_2 emissions concentration monitor,

NO_X-diluent continuous emission monitoring system, SO_2-diluent continuous emission monitoring system, diluent gas (O_2 or CO_2) monitor used to determine heat input, NO_X concentration monitoring system, moisture monitoring system, Hg concentration monitoring system, sorbent trap monitoring system, or approved alternative monitoring system, including:

(A) Date, hour, and minute of beginning of test run;

(B) Date, hour, and minute of end of test run;

(C) Monitoring system identification code;

(D) Test number and reason for test;

(E) Operating level (low, mid, high, or normal, as appropriate) and number of operating levels comprising test;

(F) Normal load (or operating level) indicator for flow RATAs (except for peaking units);

(G) Units of measure;

(H) Run number;

(I) Run value from CEMS being tested, in the appropriate units of measure;

(J) Run value from reference method, in the appropriate units of measure;

(K) Flag value (0, 1, or 9, as appropriate) indicating whether run has been used in calculating relative accuracy and bias values or whether the test was aborted prior to completion;

(L) Average gross unit load, expressed as a total gross unit load, rounded to the nearest MWe, or as steam load, rounded to the nearest thousand lb/hr), except for units that do not produce electrical or thermal output; and

(M) Flag to indicate whether an alternative performance specification has been used.

(iii) Calculations and tabulated results, as follows:

(A) Arithmetic mean of the monitoring system measurement values, of the reference method values, and of their differences, as specified in Equation A–7 in appendix A to this part;

(B) Standard deviation, as specified in Equation A–8 in appendix A to this part;

(C) Confidence coefficient, as specified in Equation A–9 in appendix A to this part;

(D) Statistical ''t'' value used in calculations;

(E) Relative accuracy test results, as specified in Equation A–10 in appendix A to this part. For multi-level flow monitor tests the relative accuracy test results shall be recorded at each load (or operating) level tested. Each load (or operating) level shall be expressed as a total gross unit load, rounded to the nearest MWe, or as steam load, rounded to the nearest thousand lb/hr, or as otherwise specified by the Administrator, for units that do not produce electrical or thermal output;

(F) Bias test results as specified in section 7.6.4 in appendix A to this part; and

(G) Bias adjustment factor from Equation A–12 in appendix A to this part for any monitoring system that failed the bias test (except as otherwise provided in section 7.6.5 of appendix A to this part) and 1.000 for any monitoring system that passed the bias test.

(iv) Description of any adjustment, corrective action, or maintenance prior to a passed test or following a failed or aborted test.

(v) F-factor value(s) used to convert NO_X pollutant concentration and diluent gas (O_2 or CO_2) concentration measurements into NO_X emission rates (in lb/mmBtu), heat input or CO_2 emissions.

(vi) For flow monitors, the equation used to linearize the flow monitor and the numerical values of the polynomial coefficients or K factor(s) of that equation.

(vii) For moisture monitoring systems, the coefficient or ''K'' factor or other mathematical algorithm used to adjust the monitoring system with respect to the reference method.

(6) For each SO_2, NO_X, Hg, or CO_2 pollutant concentration monitor, each component of a NO_X-diluent continuous emission monitoring system, and each CO_2 or O_2 monitor used to determine heat input, the owner or operator shall record the following information for the cycle time test:

(i) Component-system identification code (on and after January 1, 2009, only the component identification code is required);

(ii) Date;

(iii) Start and end times;

(iv) Upscale and downscale cycle times for each component;

(v) Stable start monitor value;

(vi) Stable end monitor value;

(vii) Reference value of calibration gas(es);

(viii) Calibration gas level;

(ix) Total cycle time;

(x) Reason for test; and

(xi) Test number.

(7) In addition to the information in paragraph (a)(5) of this section, the owner or operator shall record, for each relative accuracy test audit, supporting information sufficient to substantiate compliance with all applicable sections and appendices in this part. Unless otherwise specified in this part or in an applicable test method, the information in paragraphs (a)(7)(i) through (a)(7)(vi) of this section may be recorded either in hard copy format, electronic format or a combination of the two, and the owner or operator shall maintain this information in a format suitable for inspection and audit purposes. This RATA supporting information shall include, but shall not be limited to, the following data elements:

(i) For each RATA using Reference Method 2 (or its allowable alternatives) in appendix A to part 60 of this chapter to determine volumetric flow rate:

(A) Information indicating whether or not the location meets requirements of Method 1 in appendix A to part 60 of this chapter; and

(B) Information indicating whether or not the equipment passed the required leak checks.

(ii) For each run of each RATA using Reference Method 2 (or its allowable alternatives in appendix A to part 60 of this chapter) to determine volumetric flow rate, record the following data elements (as applicable to the measurement method used):

(A) Operating level (low, mid, high, or normal, as appropriate);

(B) Number of reference method traverse points;

(C) Average stack gas temperature (°F);

(D) Barometric pressure at test port (inches of mercury);

(E) Stack static pressure (inches of H_2O);

(F) Absolute stack gas pressure (inches of mercury);

(G) Percent CO_2 and O_2 in the stack gas, dry basis;

(H) CO_2 and O_2 reference method used;

(I) Moisture content of stack gas (percent H_2O);

(J) Molecular weight of stack gas, dry basis (lb/lb-mole);

(K) Molecular weight of stack gas, wet basis (lb/lb-mole);

(L) Stack diameter (or equivalent diameter) at the test port (ft);

(M) Average square root of velocity head of stack gas (inches of H_2O) for the run;

(N) Stack or duct cross-sectional area at test port (ft^2);

(O) Average velocity (ft/sec);

(P) Average stack flow rate, adjusted, if applicable, for wall effects (scfh, wet basis);

(Q) Flow rate reference method used;

(R) Average velocity, adjusted for wall effects;

(S) Calculated (site-specific) wall effects adjustment factor determined during the run, and, if different, the wall effects adjustment factor used in the calculations; and

(T) Default wall effects adjustment factor used.

(iii) For each traverse point of each run of each RATA using Reference Method 2 (or its allowable alternatives in appendix A to part 60 of this chapter) to determine volumetric flow rate, record the following data elements (as applicable to the measurement method used):

(A) Reference method probe type;

(B) Pressure measurement device type;

(C) Traverse point ID;

(D) Probe or pitot tube calibration coefficient;

(E) Date of latest probe or pitot tube calibration;

(F) Average velocity differential pressure at traverse point (inches of H_2O) or the average of the square roots of the velocity differential pressures at the traverse point ((inches of $H_2O)^{1/2}$);

(G) T_S, stack temperature at the traverse point (°F);

(H) Composite (wall effects) traverse point identifier;

(I) Number of points included in composite traverse point;

(J) Yaw angle of flow at traverse point (degrees);

(K) Pitch angle of flow at traverse point (degrees);

(L) Calculated velocity at traverse point both accounting and not accounting for wall effects (ft/sec); and

(M) Probe identification number.

(iv) For each RATA using Method 6C, 7E, or 3A in appendix A to part 60 of this chapter to determine SO_2, NO_X, CO_2, or O_2 concentration:

(A) Pollutant or diluent gas being measured;

(B) Span of reference method analyzer;

(C) Type of reference method system (e.g., extractive or dilution type);

(D) Reference method dilution factor (dilution type systems, only);

(E) Reference gas concentrations (zero, mid, and high gas levels) used for the 3-point pre-test analyzer calibration error test (or, for dilution type reference method systems, for the 3-point pre-test system calibration error test) and for any subsequent recalibrations;

(F) Analyzer responses to the zero-, mid-, and high-level calibration gases during the 3-point pre-test analyzer (or system) calibration error test and during any subsequent recalibration(s);

(G) Analyzer calibration error at each gas level (zero, mid, and high) for the 3-point pre-test analyzer (or system) calibration error test and for any subsequent recalibration(s) (percent of span value);

(H) Upscale gas concentration (mid or high gas level) used for each pre-run or post-run system bias check or (for dilution type reference method systems) for each pre-run or post-run system calibration error check;

(I) Analyzer response to the calibration gas for each pre-run or post-run system bias (or system calibration error) check;

(J) The arithmetic average of the analyzer responses to the zero-level gas, for each pair of pre- and post-run system bias (or system calibration error) checks;

(K) The arithmetic average of the analyzer responses to the upscale calibration gas, for each pair of pre- and post-run system bias (or system calibration error) checks;

(L) The results of each pre-run and each post-run system bias (or system calibration error) check using the zero-level gas (percentage of span value);

(M) The results of each pre-run and each post-run system bias (or system calibration error) check using the upscale calibration gas (percentage of span value);

(N) Calibration drift and zero drift of analyzer during each RATA run (percentage of span value);

(O) Moisture basis of the reference method analysis;

(P) Moisture content of stack gas, in percent, during each test run (if needed to convert to moisture basis of CEMS being tested);

(Q) Unadjusted (raw) average pollutant or diluent gas concentration for each run;

(R) Average pollutant or diluent gas concentration for each run, corrected for calibration bias (or calibration error) and, if applicable, corrected for moisture;

(S) The F-factor used to convert reference method data to units of lb/mmBtu (if applicable);

(T) Date(s) of the latest analyzer interference test(s);

(U) Results of the latest analyzer interference test(s);

(V) Date of the latest NO_2 to NO conversion test (Method 7E only);

(W) Results of the latest NO_2 to NO conversion test (Method 7E only); and

(X) For each calibration gas cylinder used during each RATA, record the cylinder gas vendor, cylinder number, expiration date, pollutant(s) in the cylinder, and certified gas concentration(s).

(v) For each test run of each moisture determination using Method 4 in appendix A to part 60 of this chapter (or its allowable alternatives), whether the determination is made to support a gas RATA, to support a flow RATA, or to quality assure the data from a continuous moisture monitoring system, record the following data elements (as applicable to the moisture measurement method used):

(A) Test number;

(B) Run number;

(C) The beginning date, hour, and minute of the run;

(D) The ending date, hour, and minute of the run;

(E) Unit operating level (low, mid, high, or normal, as appropriate);

(F) Moisture measurement method;

(G) Volume of H_2O collected in the impingers (ml);

(H) Mass of H_2O collected in the silica gel (g);

(I) Dry gas meter calibration factor;

(J) Average dry gas meter temperature (°F);

(K) Barometric pressure (inches of mercury);

(L) Differential pressure across the orifice meter (inches of H_2O);

(M) Initial and final dry gas meter readings (ft^3);

(N) Total sample gas volume, corrected to standard conditions (dscf); and

(O) Percentage of moisture in the stack gas (percent H_2O).

(vi) The raw data and calculated results for any stratification tests performed in accordance with sections 6.5.6.1 through 6.5.6.3 of appendix A to this part.

(vii) For each RATA run using the Ontario Hydro Method to determine Hg concentration:

(A) Percent CO_2 and O_2 in the stack gas, dry basis;

(B) Moisture content of the stack gas (percent H_2O);

(C) Average stack temperature (°F);

(D) Dry gas volume metered (dscm);

(E) Percent isokinetic;

(F) Particle-bound Hg collected by the filter, blank, and probe rinse (μgm);

(G) Oxidized Hg collected by the KCl impingers (μgm);

(H) Elemental Hg collected in the HNO_3/H_2O_2 impinger and in the $KMnO_4/H_2SO_4$ impingers (μgm);

(I) Total Hg, including particle-bound Hg (μgm); and

(J) Total Hg, excluding particle-bound Hg (μgm)

(viii) Data elements for Methods 30A and 30B. [Reserved]

(ix) For a unit with a flow monitor installed on a rectangular stack or duct, if a site-specific default or measured wall effects adjustment factor (WAF) is used to correct the stack gas volumetric flow rate data to account for velocity decay near the stack or duct wall, the owner or operator shall keep records of the following for each flow RATA performed with EPA Method 2 in appendices A–1 and A–2 to part 60 of this chapter, subsequent to the WAF determination:

(A) Monitoring system ID;

(B) Test number;

(C) Operating level;

(D) RATA end date and time;

(E) Number of Method 1 traverse points; and

(F) Wall effects adjustment factor (WAF), to the nearest 0.0001.

(x) For each RATA run using Method 29 in appendix A–8 to part 60 of this chapter to determine Hg concentration:

(A) Percent CO_2 and O_2 in the stack gas, dry basis;

(B) Moisture content of the stack gas (percent H_2O);

(C) Average stack gas temperature (°F);

(D) Dry gas volume metered (dscm);

(E) Percent isokinetic;

(F) Particulate Hg collected in the front half of the sampling train, corrected for the front-half blank value (μg); and

(G) Total vapor phase Hg collected in the back half of the sampling train, corrected for the back-half blank value (μg).

(8) For each certified continuous emission monitoring system, continuous opacity monitoring system, excepted monitoring system, or alternative monitoring system, the date and description of each event which requires certification, recertification, or certain diagnostic testing of the system and the date and type of each test performed. If the conditional data validation procedures of § 75.20(b)(3) are to be used to validate and report data prior to the completion of the required certification, recertification, or diagnostic testing, the date and hour of the probationary calibration error test shall be reported to mark the beginning of conditional data validation.

(9) When hardcopy relative accuracy test reports, certification reports, recertification reports, or semiannual or annual reports for gas or flow rate

CEMS, Hg CEMS, or sorbent trap monitoring systems are required or requested under § 75.60(b)(6) or § 75.63, the reports shall include, at a minimum, the following elements (as applicable to the type(s) of test(s) performed:

(i) Summarized test results.

(ii) DAHS printouts of the CEMS data generated during the calibration error, linearity, cycle time, and relative accuracy tests.

(iii) For pollutant concentration monitor or diluent monitor relative accuracy tests at normal operating load:

(A) The raw reference method data from each run, i.e., the data under paragraph (a)(7)(iv)(Q) of this section (usually in the form of a computerized printout, showing a series of one-minute readings and the run average);

(B) The raw data and results for all required pre-test, post-test, pre-run and post-run quality assurance checks (*i.e.*, calibration gas injections) of the reference method analyzers, i.e., the data under paragraphs (a)(7)(iv)(E) through (a)(7)(iv)(N) of this section;

(C) The raw data and results for any moisture measurements made during the relative accuracy testing, i.e., the data under paragraphs (a)(7)(v)(A) through (a)(7)(v)(O) of this section; and

(D) Tabulated, final, corrected reference method run data (*i.e.*, the actual values used in the relative accuracy calculations), along with the equations used to convert the raw data to the final values and example calculations to demonstrate how the test data were reduced.

(iv) For relative accuracy tests for flow monitors:

(A) The raw flow rate reference method data, from Reference Method 2 (or its allowable alternatives) under appendix A to part 60 of this chapter, including auxiliary moisture data (often in the form of handwritten data sheets), i.e., the data under paragraphs (a)(7)(ii)(A) through (a)(7)(ii)(T), paragraphs (a)(7)(iii)(A) through (a)(7)(iii)(M), and, if applicable, paragraphs (a)(7)(v)(A) through (a)(7)(v)(O) of this section; and

(B) The tabulated, final volumetric flow rate values used in the relative accuracy calculations (determined from the flow rate reference method data and other necessary measurements, such as moisture, stack temperature and pressure), along with the equations used to convert the raw data to the final values and example calculations to demonstrate how the test data were reduced.

(v) Calibration gas certificates for the gases used in the linearity, calibration error, and cycle time tests and for the calibration gases used to quality assure the gas monitor reference method data during the relative accuracy test audit.

(vi) Laboratory calibrations of the source sampling equipment. For sorbent trap monitoring systems, the laboratory analyses of all sorbent traps, and information documenting the results of all leak checks and other applicable quality control procedures.

(vii) A copy of the test protocol used for the CEMS certifications or recertifications, including narrative that explains any testing abnormalities, problematic sampling, and analytical conditions that required a change to the test protocol, and/or solutions to technical problems encountered during the testing program.

(viii) Diagrams illustrating test locations and sample point locations (to verify that locations are consistent with information in the monitoring plan). Include a discussion of any special traversing or measurement scheme. The discussion shall also confirm that sample points satisfy applicable acceptance criteria.

(ix) Names of key personnel involved in the test program, including test team members, plant contacts, agency representatives and test observers on site.

(10) Whenever reference methods are used as backup monitoring systems pursuant to § 75.20(d)(3), the owner or operator shall record the following information:

(i) For each test run using Reference Method 2 (or its allowable alternatives in appendix A to part 60 of this chapter) to determine volumetric flow rate, record the following data elements (as applicable to the measurement method used):

(A) Unit or stack identification number;

(B) Reference method system and component identification numbers;

(C) Run date and hour;

(D) The data in paragraph (a)(7)(ii) of this section, except for paragraphs (a)(7)(ii)(A), (F), (H), (L) and (Q) through (T); and

(E) The data in paragraph (a)(7)(iii), except on a run basis.

(ii) For each reference method test run using Method 6C, 7E, or 3A in appendix A to part 60 of this chapter to determine SO_2, NO_X, CO_2, or O_2 concentration:

(A) Unit or stack identification number;

(B) The reference method system and component identification numbers;

(C) Run number;

(D) Run start date and hour;

(E) Run end date and hour;

(F) The data in paragraphs (a)(7)(iv)(B) through (I) and (L) through (O); and (G) Stack gas density adjustment factor (if applicable).

(iii) For each hour of each reference method test run using Method 6C, 7E, or 3A in appendix A to part 60 of this chapter to determine SO_2, NO_X, CO_2, or O_2 concentration:

(A) Unit or stack identification number;

(B) The reference method system and component identification numbers;

(C) Run number;

(D) Run date and hour;

(E) Pollutant or diluent gas being measured;

(F) Unadjusted (raw) average pollutant or diluent gas concentration for the hour; and

(G) Average pollutant or diluent gas concentration for the hour, adjusted as appropriate for moisture, calibration bias (or calibration error) and stack gas density.

(11) For each other quality-assurance test or other quality assurance activity, the owner or operator shall record the following (as applicable):

(i) Component/system identification code;

(ii) Parameter;

(iii) Test or activity completion date and hour;

(iv) Test or activity description;

(v) Test result;

(vi) Reason for test; and

(vii) Test code.

(12) For each request for a quality assurance test extension or exemption, for any loss of exempt status, and for each single-load flow RATA claim pursuant to section 2.3.1.3(c)(3) of appendix B to this part, the owner or operator shall record the following (as applicable):

(i) For a RATA deadline extension or exemption request:

(A) Monitoring system identification code;

(B) Date of last RATA;

(C) RATA expiration date without extension;

(D) RATA expiration date with extension;

(E) Type of RATA extension of exemption claimed or lost;

(F) Year to date hours of usage of fuel other than very low sulfur fuel;

(G) Year to date hours of non-redundant back-up CEMS usage at the unit/stack; and

(H) Quarter and year.

(ii) For a linearity test or flow-to-load ratio test quarterly exemption:

(A) Component-system identification code;

(B) Type of test;

(C) Basis for exemption;

(D) Quarter and year; and

(E) Span scale.

(iii) [Reserved]

(iv) For a fuel flowmeter accuracy test extension:

(A) Component-system identification code;

(B) Date of last accuracy test;

(C) Accuracy test expiration date without extension;

(D) Accuracy test expiration date with extension;

(E) Type of extension; and

(F) Quarter and year.

(v) For a single-load (or single-level) flow RATA claim:

(A) Monitoring system identification code;

(B) Ending date of last annual flow RATA;

(C) The relative frequency (percentage) of unit or stack operation at each load (or operating) level (low, mid, and high) since the previous annual flow RATA, to the nearest 0.1 percent;

(D) End date of the historical load (or operating level) data collection period; and

(E) Indication of the load (or operating) level (low, mid or high) claimed for the single-load flow RATA.

(13) An indication that data have been excluded from a periodic span and range evaluation of an SO_2 or NO_X monitor under section 2.1.1.5 or 2.1.2.5 of appendix A to this part and the reason(s) for excluding the data. For purposes of reporting under § 75.64(a), this information shall be reported with the quarterly report as descriptive text consistent with § 75.64(g).

(14) For the sorbent traps used in sorbent trap monitoring systems to quantify Hg concentration under subpart I of this part (including sorbent traps used for relative accuracy testing), the owner or operator shall keep records of the following:

(i) The ID number of the monitoring system in which each sorbent trap was used to collect Hg;

(ii) The unique identification number of each sorbent trap;

(iii) The beginning and ending dates and hours of the data collection period for each sorbent trap;

(iv) The average Hg concentration (in μgm/dscm) for the data collection period;

(v) Information documenting the results of the required leak checks;

(vi) The analysis of the Hg collected by each sorbent trap; and

(vii) Information documenting the results of the other applicable quality control procedures in § 75.15 and in appendices B and K to this part.

(b) *Excepted monitoring systems for gas-fired and oil-fired units*. The owner or operator shall record the applicable information in this section for each excepted monitoring system following the requirements of appendix D to this part or appendix E to this part for determining and recording emissions from an affected unit.

(1) For certification and quality assurance testing of fuel flowmeters tested against a reference fuel flow rate (*i.e.*, flow rate from another fuel flowmeter under section 2.1.5.2 of appendix D to this part or flow rate from a procedure according to a standard incorporated by reference under section 2.1.5.1 of appendix D to this part):

(i) Unit or common pipe header identification code;

(ii) Component and system identification codes of the fuel flowmeter being tested (on and after January 1, 2009, only the component identification code is required);

(iii) Date and hour of test completion, for a test performed in-line at the unit;

(iv) Date and hour of flowmeter reinstallation, for laboratory tests;

(v) Test number;

(vi) Upper range value of the fuel flowmeter;

(vii) Flowmeter measurements during accuracy test (and mean of values), including units of measure;

(viii) Reference flow rates during accuracy test (and mean of values), including units of measure;

(ix) Level of fuel flowrate test during runs (low, mid or high);

(x) Average flowmeter accuracy for low and high fuel flowrates and highest flowmeter accuracy of any level designated as mid, expressed as a percent of upper range value;

(xi) Indicator of whether test method was a lab comparison to reference meter or an in-line comparison against a master meter;

(xii) Test result (aborted, pass, or fail); and

(xiii) Description of fuel flowmeter calibration specification or procedure (in the certification application, or periodically if a different method is used for annual quality assurance testing).

(2) For each transmitter or transducer accuracy test for an orifice-, nozzle-, or venturi-type flowmeter used under section 2.1.6 of appendix D to this part:

(i) Component and system identification codes of the fuel flowmeter being tested (on and after January 1, 2009, only the component identification code is required);

(ii) Completion date and hour of test;

(iii) For each transmitter or transducer: transmitter or transducer type (differential pressure, static pressure, or temperature); the full-scale value of the transmitter or transducer, transmitter input (pre-calibration) prior to accuracy test, including units of measure; and expected transmitter output during accuracy test (reference value from NIST-traceable equipment), including units of measure;

(iv) For each transmitter or transducer tested: output during accuracy test, including units of measure; transmitter or transducer accuracy as a percent of the full-scale value; and transmitter output level as a percent of the full-scale value;

(v) Average flowmeter accuracy at low and high level fuel flowrates and highest flowmeter accuracy of any level designated as mid fuel flowrate, expressed as a percent of upper range value;

(vi) Test result (pass, fail, or aborted);

(vii) Test number; and

(viii) Accuracy determination methodology.

(3) For each visual inspection of the primary element or transmitter or transducer accuracy test for an orifice-, nozzle-, or venturi-type flowmeter under sections 2.1.6.1 through 2.1.6.4 of appendix D to this part:

(i) Date of inspection/test;

(ii) Hour of completion of inspection/test;

(iii) Component and system identification codes of the fuel flowmeter being inspected/tested; and

(iv) Results of inspection/test (pass or fail).

(4) For fuel flowmeters that are tested using the optional fuel flow-to-load ratio procedures of section 2.1.7 of appendix D to this part:

(i) Test data for the fuel flowmeter flow-to-load ratio or gross heat rate check, including:

(A) Component/system identification code (on and after January 1, 2009, only the monitoring system identification code is required);

(B) Calendar year and quarter;

(C) Indication of whether the test is for fuel flow-to-load ratio or gross heat rate;

(D) Quarterly average absolute percent difference between baseline for fuel flow-to-load ratio (or baseline gross heat rate and hourly quarterly fuel flow-to-load ratios (or gross heat rate value);

(E) Test result;

(F) Number of hours used in the analysis;

(G) Number of hours excluded due to co-firing;

(H) Number of hours excluded due to ramping;

(I) Number of hours excluded in lower 25.0 percent range of operation; and

(J) Test number.

(ii) Reference data for the fuel flowmeter flow-to-load ratio or gross heat rate evaluation, including:

(A) Completion date and hour of most recent primary element inspection or test number of the most recent primary element inspection (as applicable); (on and after January 1, 2009, the test number of the most recent primary element inspection is required in lieu of the completion date and hour for the most recent primary element inspection);

(B) Completion date and hour of most recent flow meter of transmitter accuracy test or test number of the most recent flowmeter or transmitter accuracy test (as applicable); (on and after January 1, 2009, the test number of the most recent flowmeter or transmitter accuracy test is required in lieu of the completion date and hour for the most recent flowmeter or transmitter accuracy test);

(C) Beginning date and hour of baseline period;

(D) Completion date and hour of baseline period;

(E) Average fuel flow rate, in 100 scfh for gas and lb/hr for oil;

(F) Average load, in megawatts, 1000 lb/hr of steam, or mmBtu/hr thermal output;

(G) Baseline fuel flow-to-load ratio, in the appropriate units of measure (if using fuel flow-to-load ratio);

(H) Baseline gross heat rate if using gross heat rate, in the appropriate units of measure (if using gross heat rate check);

(I) Number of hours excluded from baseline data due to ramping;

(J) Number of hours excluded from baseline data in lower 25.0 percent of range of operation;

(K) Average hourly heat input rate;

(L) Flag indicating baseline data collection is in progress and that fewer than four calendar quarters have elapsed since the quarter of the last flowmeter QA test;

(M) Number of hours excluded due to co-firing; and

(N) Monitoring system identification code.

(5) For gas-fired peaking units or oil-fired peaking units using the optional procedures of appendix E to this part, for each initial performance, periodic, or quality assurance/quality control-related test:

(i) For each run of emission data, record the following data:

(A) Unit or common pipe identification code;

(B) Monitoring system identification code for appendix E system (on and after January 1, 2009, component identification codes shall be reported in addition to the monitoring system identification code);

(C) Run start date and time;

(D) Run end date and time;

(E) Total heat input during the run (mmBtu);

(F) NO_X emission rate (lb/mmBtu) from reference method;

(G) Response time of the O_2 and NO_X reference method analyzers;

(H) Type of fuel(s) combusted during the run. This requirement remains in effect through December 31, 2008;

(I) Heat input rate (mmBtu/hr) during the run;

(J) Test number;

(K) Run number;

(L) Operating level during the run;

(M) NO_X concentration recorded by the reference method during the run;

(N) Diluent concentration recorded by the reference method during the run; and

(O) Moisture measurement for the run (if applicable).

(ii) For each run during which oil or mixed fuels are combusted record the following data:

(A) Unit or common pipe identification code;

(B) Monitoring system identification code for oil monitoring system (on and after January 1, 2009, component identification codes shall be reported in addition to the monitoring system identification code);

(C) Run start date and time;

(D) Run end date and time;

(E) Mass flow or volumetric flow of oil, in the units of measure for the type of fuel flowmeter;

(F) Gross calorific value of oil in the appropriate units of measure;

(G) Density of fuel oil in the appropriate units of measure (if density is used to convert oil volume to mass);

(H) Hourly heat input (mmBtu) during run from oil;

(I) Test number;

(J) Run number; and

(K) Operating level during the run.

(iii) For each run during which gas or mixed fuels are combusted record the following data:

(A) Unit or common pipe identification code;

(B) Monitoring system identification code for gas monitoring system (on and after January 1, 2009, component identification codes shall be reported in addition to the monitoring system identification code);

(C) Run start date and time;

(D) Run end date and time;

(E) Volumetric flow of gas (100 scf);

(F) Gross calorific value of gas (Btu/100 scf);

(G) Hourly heat input (mmBtu) during run from gas;

(H) Test number;

(I) Run number; and

(J) Operating level during the run.

(iv) For each operating level at which runs were performed:

(A) Completion date and time of last run for operating level (as applicable). This requirement remains in effect through December 31, 2008;

(B) Type of fuel(s) combusted during test;

(C) Average heat input rate at that operating level (mmBtu/hr);

(D) Arithmetic mean of NO_X emission rates from reference method run at this level;

(E) F-factor used in calculations of NO_X emission rate at that operating level;

(F) Unit operating parametric data related to NO_X formation for that unit type (e.g., excess O_2 level, water/fuel ratio);

(G) Test number;

(H) Operating level for runs; and

(I) Component identification code (required on and after January 1, 2009).

(c) Except as otherwise provided in § 75.58(b)(3)(i), units with add-on SO_2 or NO_X emission controls following the provisions of § 75.34(a)(1) or (a)(2), and for units with add-on Hg emission controls, the owner or operator shall keep

the following records on-site in the quality assurance/quality control plan required by section 1 of appendix B to this part:

(1) A list of operating parameters for the add-on emission controls, including parameters in § 75.58(b), appropriate to the particular installation of add-on emission controls; and

(2) The range of each operating parameter in the list that indicates the add-on emission controls are properly operating.

(d) *Excepted monitoring for low mass emissions units under § 75.19(c)(1)(iv)*. For oil-and gas-fired units using the optional SO_2, NO_X and CO_2 emissions calculations for low mass emission units under § 75.19, the owner or operator shall record the following information for tests performed to determine a fuel and unit-specific default as provided in § 75.19(c)(1)(iv):

(1) For each run of each test performed using the procedures of section 2.1 of appendix E to this part, record the following data:

(i) Unit or common pipe identification code;

(ii) Run start date and time;

(iii) Run end date and time;

(iv) NO_X emission rate (lb/mmBtu) from reference method;

(v) Response time of the O_2 and NO_X reference method analyzers;

(vi) Type of fuel(s) combusted during the run;

(vii) Test number;

(viii) Run number;

(ix) Operating level during the run;

(x) NO_X concentration recorded by the reference method during the run;

(xi) Diluent concentration recorded by the reference method during the run;

(xii) Moisture measurement for the run (if applicable); and

(xiii) An indicator (''flag'') if the run is used to calculate the highest 3-run average NO_X emission rate at any load level.

(2) For each single-load or multiple-load appendix E test, record the following:

(i) The three-run average NO_X emission rate for each load level;

(ii) An indicator that the average NO_X emission rate is the highest NO_X average emission rate recorded at any load level of the test (if appropriate);

(iii) The default NO_X emission rate (highest three-run average NO_X emission rate at any load level);

(iv) An indicator that the add-on NO_X emission controls were operating or not operating during each run of the test;

(v) Parameter data indicating the use and efficacy of control equipment during the test; and

(vi) Indicator of whether the testing was done at base load, peak load or both (if appropriate); and

(vii) The default NO_X emission rate for peak load hours (if applicable).

(3) For each unit in a group of identical units qualifying for reduced testing under § 75.19(c)(1)(iv)(B), record the following data:

(i) The unique group identification code assigned to the group. This code must include the ORIS code of one of the units in the group;

(ii) The ORIS code or facility identification code for the unit;

(iii) The plant name of the facility at which the unit is located, consistent with the facility's monitoring plan;

(iv) The identification code for the unit, consistent with the facility's monitoring plan;

(v) A record of whether or not the unit underwent fuel and unit-specific testing for purposes of establishing a fuel and unit-specific NO_X emission rate for purposes of § 75.19;

(vi) The completion date of the fuel and unit-specific test performed for purposes of establishing a fuel and unit-specific NO_X emission rate for purposes of § 75.19;

(vii) The fuel and unit-specific NO_X default rate established for the group of identical units under § 75.19;

(viii) The type of fuel combusted for the units during testing and represented by the resulting default NO_X emission rate;

(ix) The control status for the units during testing and represented by the resulting default NO_X emission rate;

(x) Documentation supporting the qualification of all units in the group for reduced testing based on the criteria established in §§ 75.19(c)(1)(iv)(B)(*1*); and

(xi) Purpose of group tests.

(e) *Excepted monitoring for Hg low mass emission units under § 75.81(b).* For qualifying coal-fired units using the alternative low mass emission methodology under § 75.81(b), the owner or operator shall record the data elements described in § 75.59(a)(7)(vii), § 75.59(a)(7)(viii), or § 75.59(a)(7)(x), as applicable, for each run of each Hg emission test and re-test required under § 75.81(c)(1) or § 75.81(d)(4)(iii).

(f) *DAHS Verification.* For each DAHS (missing data and formula) verification that is required for initial certification, recertification, or for certain diagnostic testing of a monitoring system, record the date and hour that the DAHS verification is successfully completed. (This requirement only applies to units that report monitoring plan data in accordance with § 75.53(g) and (h).)

[64 FR 28614, May 26, 1999, as amended at 67 FR 40442, June 12, 2002; 70 FR 28683, May 18, 2005; 63 FR 4354, Jan. 24, 2008]

Subpart G—Reporting Requirements

§ 75.60 General provisions.

(a) The designated representative for any affected unit subject to the requirements of this part shall comply with all reporting requirements in this section and with the signatory requirements of § 72.21 of this chapter for all submissions.

(b) *Submissions.* The designated representative shall submit all reports and petitions (except as provided in § 75.61) as follows:

(1) *Initial certifications.* The designated representative shall submit initial certification applications according to § 75.63.

(2) *Recertifications.* The designated representative shall submit recertification applications according to § 75.63.

(3) *Monitoring plans.* The designated representative shall submit monitoring plans according to § 75.62.

(4) *Electronic quarterly reports.* The designated representative shall submit electronic quarterly reports according to § 75.64.

(5) *Other petitions and communications.* The designated representative shall submit petitions, correspondence, application forms, designated representative signature, and petition-related test results in hardcopy to the Administrator. Additional petition requirements are specified in §§ 75.66 and 75.67.

(6) *Semiannual or annual RATA reports.* If requested in writing (or by electronic mail) by the applicable EPA Regional Office, appropriate State, and/or appropriate local air pollution control agency, the designated representative shall submit a hardcopy RATA report within 45 days after completing a required semiannual or annual RATA according to section 2.3.1 of appendix B to this part, or within 15 days of receiving the request, whichever is later. The designated representative shall report the hardcopy information required by § 75.59(a)(9) to the applicable EPA Regional Office, appropriate State, and/or appropriate local air pollution control agency that requested the RATA report.

(7) *Routine appendix E retest reports.* If requested in writing (or by electronic mail) by the applicable EPA Regional Office, appropriate State, and/or appropriate local air pollution control agency, the designated representative shall submit a hardcopy report within 45 days after completing a required periodic retest according to section 2.2 of appendix E to this part, or within 15 days of receiving the request, whichever is later. The designated representative shall report the hardcopy information required by § 75.59(b)(5) to the applicable EPA Regional Office, appropriate State, and/or appropriate local air pollution control agency that requested the hardcopy report.

(8) *Routine retest reports for Hg low mass emissions units.* If requested in writing (or by electronic mail) by the applicable EPA Regional Office, appropriate State, and/or appropriate local air pollution control agency, the designated representative shall submit a hardcopy report for a semiannual or annual retest required under § 75.81(d)(4)(iii) for a Hg low mass emissions unit, within 45 days after completing the test or within 15 days of receiving the request, whichever is later. The designated representative shall report, at a minimum, the following hardcopy information to the applicable EPA Regional Office, appropriate

State, and/or appropriate local air pollution control agency that requested the hardcopy report: a summary of the test results; the raw reference method data for each test run; the raw data and results of all pretest, post-test, and post-run quality-assurance checks of the reference method; the raw data and results of moisture measurements made during the test runs (if applicable); diagrams illustrating the test and sample point locations; a copy of the test protocol used; calibration certificates for the gas standards or standard solutions used in the testing; laboratory calibrations of the source sampling equipment; and the names of the key personnel involved in the test program, including test team members, plant contact persons, agency representatives and test observers.

(c) *Confidentiality of data.* The following provisions shall govern the confidentiality of information submitted under this part.

(1) All emission data reported in quarterly reports under § 75.64 shall remain public information.

(2) For information submitted under this part other than emission data submitted in quarterly reports, the designated representative must assert a claim of confidentiality at the time of submission for any information he or she wishes to have treated as confidential business information (CBI) under subpart B of part 2 of this chapter. Failure to assert a claim of confidentiality at the time of submission may result in disclosure of the information by EPA without further notice to the designated representative.

(3) Any claim of confidentiality for information submitted in quarterly reports under § 75.64 must include substantiation of the claim. Failure to provide substantiation may result in disclosure of the information by EPA without further notice.

(4) As provided under subpart B of part 2 of this chapter, EPA may review information submitted to determine whether it is entitled to confidential treatment even when confidentiality claims are initially received. The EPA will contact the designated representative as part of such a review process.

[58 FR 3701, Jan. 11, 1993, as amended at 60 FR 26538, May 17, 1995; 64 FR 28620, May 26, 1999; 67 FR 40442, June 12, 2002; 73 FR 4356, Jan. 24, 2008]

§ 75.61 Notifications.

(a) *Submission.* The designated representative for an affected unit (or owner or operator, as specified) shall submit notice to the Administrator, to the appropriate EPA Regional Office, and to the applicable State and local air pollution control agencies for the following purposes, as required by this part.

(1) *Initial certification and recertification test notifications.* The owner or operator or designated representative for an affected unit shall submit written notification of initial certification tests and revised test dates as specified in § 75.20 for continuous emission monitoring systems, for the excepted Hg monitoring methodology under § 75.81(b), for alternative monitoring systems under subpart E of this part, or for excepted monitoring systems under appendix E to this part, except as provided in paragraphs (a)(1)(iii), (a)(1)(iv) and (a)(4) of this section. The owner or operator shall also provide written notification of testing performed under § 75.19(c)(1)(iv)(A) to establish fuel-and-unit-specific NO_X emission rates for low mass emissions units. Such notifications are not required, however, for initial certifications and recertifications of excepted monitoring systems under appendix D to this part.

(i) Notification of initial certification testing and full recertification. Initial certification test notifications and notifications of full recertification testing under § 75.20(b)(2) shall be submitted not later than 21 days prior to the first scheduled day of certification or recertification testing. In emergency situations when full recertification testing is required following an uncontrollable failure of equipment that results in lost data, notice shall be sufficient if provided within 2 business days following the date when testing is scheduled. Testing may be performed on a date other than that already provided in a notice under this

subparagraph as long as notice of the new date is provided either in writing or by telephone or other means at least 7 days prior to the original scheduled test date or the revised test date, whichever is earlier.

(ii) *Notification of certification retesting, and partial recertification testing.* For retesting required following a loss of certification under § 75.20(a)(5) or for partial recertification testing required under § 75.20(b)(2), notice of the date of any required RATA testing or any requred retesting under section 2.3 in appendix E to this part shall be submitted either in writing or by telephone at least 7 days prior to the first scheduled day of testing; except that in emergency situations when testing is required following an uncontrollable failure of equipment that results in lost data, notice shall be sufficient if provided within 2 business days following the date when testing is scheduled. Testing may be performed on a date other than that already provided in a notice under this subparagraph as long as notice of the new date is provided by telephone or other means at least 2 business days prior to the original scheduled test date or the revised test date, whichever is earlier.

(iii) *Repeat of testing without notice.* Notwithstanding the above notice requirements, the owner or operator may elect to repeat a certification or recertification test immediately, without advance notification, whenever the owner or operator has determined during the certification or recertification testing that a test was failed or must be aborted, or that a second test is necessary in order to attain a reduced relative accuracy test frequency.

(iv) *Waiver from notification requirements.* The Administrator, the appropriate EPA Regional Office, or the applicable State or local air pollution control agency may issue a waiver from the notification requirement of paragraph (a)(1)(ii) of this section, for a unit or a group of units, for one or more recertification tests or other retests. The Administrator, the appropriate EPA Regional Office, or the applicable State or local air pollution control agency may also discontinue the waiver and reinstate the notification requirement of paragraph (a)(1)(ii) of this section for future recertification tests (or other retests) of a unit or a group of units.

(2) *New unit, newly affected unit, new stack, or new flue gas desulfurization system operation notification.* The designated representative for an affected unit shall submit written notification: For a new unit or a newly affected unit, of the planned date when a new unit or newly affected unit will commence commercial operation, or becomes affected, or, for new stack or flue gas desulfurization system, of the planned date when a new stack or flue gas desulfurization system will be completed and emissions will first exit to the atmosphere.

(i) Notification of the planned date shall be submitted not later than 45 days prior to the date the unit commences commercial operation or becomes affected, or not later than 45 days prior to the date when a new stack or flue gas desulfurization system exhausts emissions to the atmosphere.

(ii) If the date when the unit commences commercial operation or becomes affected, or the date when the new stack or flue gas desulfurization system exhausts emissions to the atmosphere, whichever is applicable, changes from the planned date, a notification of the actual date shall be submitted not later than 7 days following: The date the unit commences commercial operation or becomes affected, or the date when a new stack or flue gas desulfurization system exhausts emissions to the atmosphere.

(3) *Unit shutdown and recommencement of commercial operation.* For an affected unit that will be shut down on the relevant compliance date specified in § 75.4 or in a State or Federal pollutant mass emissions reduction program that adopts the monitoring and reporting requirements of this part, if the owner or operator is relying on the provisions in § 75.4(d) to postpone certification testing, the designated representative for the unit shall submit notification of unit shutdown and recommencement of commercial operation as follows:

(i) For planned unit shutdowns (e.g., extended maintenance outages), written notification of the planned shutdown date shall be provided at least 21

days prior to the applicable compliance date, and written notification of the planned date of recommencement of commercial operation shall be provided at least 21 days in advance of unit restart. If the actual shutdown date or the actual date of recommencement of commercial operation differs from the planned date, written notice of the actual date shall be submitted no later than 7 days following the actual date of shutdown or of recommencement of commercial operation, as applicable;

(ii) For unplanned unit shutdowns (e.g., forced outages), written notification of the actual shutdown date shall be provided no more than 7 days after the shutdown, and written notification of the planned date of recommencement of commercial operation shall be provided at least 21 days in advance of unit restart. If the actual date of recommencement of commercial operation differs from the expected date, written notice of the actual date shall be submitted no later than 7 days following the actual date of recommencement of commercial operation.

(4) *Use of backup fuels for appendix E procedures*. The designated representative for an affected oil-fired or gas-fired peaking unit that is using an excepted monitoring system under appendix E of this part and that is relying on the provisions in §75.4(f) to postpone testing of a fuel shall submit written notification of that fact no later than 45 days prior to the deadline in §75.4. The designated representative shall also submit a notification that such a fuel has been combusted no later than 7 days after the first date of combustion of any fuel for which testing has not been performed under appendix E after the deadline in §75.4. Such notice shall also include notice that testing under appendix E either was performed during the initial combustion or notice of the date that testing will be performed.

(5) *Periodic relative accuracy test audits, appendix E retests, and low mass emissions unit retests*. The owner or operator or designated representative of an affected unit shall submit written notice of the date of periodic relative accuracy testing performed under section 2.3.1 of appendix B to this part, of periodic retesting performed under section 2.2 of appendix E to this part, of periodic retesting of low mass emissions units performed under §75.19(c)(1)(iv)(D), and of periodic retesting of Hg low mass emissions units performed under §75.81(d)(4)(iii), no later than 21 days prior to the first scheduled day of testing. Testing may be performed on a date other than that already provided in a notice under this subparagraph as long as notice of the new date is provided either in writing or by telephone or other means acceptable to the respective State agency or office of EPA, and the notice is provided as soon as practicable after the new testing date is known, but no later than twenty-four (24) hours in advance of the new date of testing.

(i) Written notification under paragraph (a) (5) of this section may be provided either by mail or by facsimile. In addition, written notification may be provided by electronic mail, provided that the respective State agency or office of EPA agrees that this is an acceptable form of notification.

(ii) Notwithstanding the notice requirements under paragraph (a)(5) of this section, the owner or operator may elect to repeat a periodic relative accuracy test, appendix E restest, or low mass emissions unit retest immediately, without additional notification whenever the owner or operator has determined that a test was failed, or that a second test is necessary in order to attain a reduced relative accuracy test frequency.

(iii) *Waiver from notification requirements*. The Administrator, the appropriate EPA Regional Office, or the applicable State air pollution control agency may issue a waiver from the requirement of paragraph (a)(5) of this section to provide notice to the respective State agency or office of EPA for a unit or a group of units for one or more tests. The Administrator, the appropriate EPA Regional Office, or the applicable State air pollution control agency may also discontinue the waiver and reinstate the requirement of paragraph (a)(5) of this section to provide notice to the respective State agency or office of EPA for future tests

for a unit or a group of units. In addition, if an observer from a State agency or EPA is present when a test is rescheduled, the observer may waive all notification requirements under paragraph (a)(5) of this section for the rescheduled test.

(6) *Notice of combustion of emergency fuel under appendix D or E.* The designated representative of an oil-fired unit or gas-fired unit using appendix D or E of this part shall, for each calendar quarter in which emergency fuel is combusted, provide notice of the combustion of the emergency fuel in the cover letter (or electronic equivalent) which transmits the next quarterly report submitted under § 75.64. The notice shall specify the exact dates and hours during which the emergency fuel was combusted.

(7) *Long-term cold storage and recommencement of commercial operation.* The designated representative for an affected unit that is placed into long-term cold storage that is relying on the provisions in § 75.4(d) or § 75.64(a), either to postpone certification testing or to discontinue the submittal of quarterly reports during the period of long-term cold storage, shall provide written notification of long-term cold storage status and recommencement of commercial operation as follows:

(i) Whenever an affected unit has been placed into long-term cold storage, written notification of the date and hour that the unit was shutdown and a statement from the designated representative stating that the shutdown is expected to last for at least two years from that date, in accordance with the definition for long-term cold storage of a unit as provided in § 72.2 of this chapter.

(ii) Whenever an affected unit that has been placed into long-term cold storage is expected to resume operation, written notification shall be submitted 45 calendar days prior to the planned date of recommencement of commercial operation. If the actual date of recommencement of commercial operation differs from the expected date, written notice of the actual date shall be submitted no later than 7 days following the actual date of recommencement of commercial operation.

(8) *Certification deadline date for new or newly affected units.* The designated representative of a new or newly affected unit shall provide notification of the date on which the relevant deadline for initial certification is reached, either as provided in § 75.4(b) or § 75.4(c), or as specified in a State or Federal SO_2, NO_X, or Hg mass emission reduction program that incorporates by reference, or otherwise adopts, the monitoring, recordkeeping, and reporting requirements of subpart F, G, H, or I of this part. The notification shall be submitted no later than 7 calendar days after the applicable certification deadline is reached.

(b) The owner or operator or designated representative shall submit notification of certification tests and recertification tests for continuous opacity monitoring systems as specified in § 75.20(c)(8) to the State or local air pollution control agency.

(c) If the Administrator determines that notification substantially similar to that required in this section is required by any other State or local agency, the owner or operator or designated representative may send the Administrator a copy of that notification to satisfy the requirements of this section, provided the ORISPL unit identification number(s) is denoted.

[60 FR 26538, May 17, 1995, as amended at 61 FR 25582, May 22, 1996; 61 FR 59162, Nov. 22, 1996; 64 FR 28620, May 26, 1999; 67 FR 40442, 40443, June 12, 2002; 73 FR 4356, Jan. 24, 2008]

§ 75.62 Monitoring plan submittals.

(a) *Submission*—(1) *Electronic.* Using the format specified in paragraph (c) of this section, the designated representative for an affected unit shall submit a complete, electronic, up-to-date monitoring plan file (except for hardcopy portions identified in paragraph (a)(2) of this section) to the Administrator as follows: no later than 21 days prior to the initial certification tests; at the time of each certification or recertification application submission; and (prior to or concurrent with) the submittal of the electronic quarterly report for a reporting quarter where an update of the electronic monitoring plan information is required, either under § 75.53(b) or elsewhere in this part.

(2) *Hardcopy*. The designated representative shall submit all of the hardcopy information required under § 75.53 to the appropriate EPA Regional Office and the appropriate State and/or local air pollution control agency prior to initial certification. Thereafter, the designated representative shall submit hardcopy information only if that portion of the monitoring plan is revised. The designated representative shall submit the required hardcopy information as follows: no later than 21 days prior to the initial certification test; with any certification or recertification application, if a hardcopy monitoring plan change is associated with the certification or recertification event; and within 30 days of any other event with which a hardcopy monitoring plan change is associated, pursuant to § 75.53(b). Electronic submittal of all monitoring plan information, including hardcopy portions, is permissible provided that a paper copy of the hardcopy portions can be furnished upon request.

(b) *Contents*. Monitoring plans shall contain the information specified in § 75.53 of this part.

(c) *Format*. The designated representative shall submit each monitoring plan in a format specified by the Administrator.

[58 FR 3701, Jan. 11, 1993, as amended at 60 FR 26539, May 17, 1995; 64 FR 28621, May 26, 1999; 67 FR 40443, June 12, 2002; 73 FR 4356, Jan. 24, 2008]

§ 75.63 Initial certification or recertification application.

(a) *Submission*. The designated representative for an affected unit or a combustion source shall submit applications and reports as follows:

(1) *Initial certifications*. (i) For CEM systems or excepted monitoring systems under appendix D or E to this part, within 45 days after completing all initial certification tests, submit:

(A) To the Administrator, the electronic information required by paragraph (b)(1) of this section. Except for subpart E applications for alternative monitoring systems or unless specifically requested by the Administrator, do not submit a hardcopy of the test data and results to the Administrator.

(B) To the applicable EPA Regional Office and the appropriate State and/or local air pollution control agency, the hardcopy information required by paragraph (b)(2) of this section.

(ii) For units for which the owner or operator is applying for certification approval of the optional excepted methodology under § 75.19 for low mass emissions units, submit, no later than 45 days prior to commencing use of the methodology:

(A) To the Administrator, the electronic low mass emission qualification information required by § 75.53(f)(5)(i) or § 75.53(h)(4)(i) (as applicable) and paragraph (b)(1)(i) of this section; and

(B) To the applicable EPA Regional Office and appropriate State and/or local air pollution control agency, the hardcopy information required by § 75.19(a)(2) and § 75.53(f)(5)(ii) or § 75.53(h)(4)(ii) (as applicable), the hardcopy results of any appendix E (of this part) tests or any CEMS data analysis used to derive a fuel-and-unit-specific default NO_X emission rate.

(2) *Recertifications and diagnostic testing*. (i) Within 45 days after completing all recertification tests under § 75.20(b), submit to the Administrator the electronic information required by paragraph (b)(1) of this section. Except for subpart E applications for alternative monitoring systems or unless specifically requested by the Administrator, do not submit a hardcopy of the test data and results to the Administrator.

(ii) Within 45 days after completing all recertification tests under § 75.20(b), submit the hardcopy information required by paragraph (b)(2) of this section to the applicable EPA Regional Office and the appropriate State and/or local air pollution control agency. The applicable EPA Regional Office or appropriate State or local air pollution control agency may waive the requirement to provide hardcopy recertification test and data results. The applicable EPA Regional Office or the appropriate State or local air pollution control agency may also discontinue the waiver and reinstate the requirement of this paragraph to provide a hardcopy report of the recertification test data and results.

(iii) Notwithstanding the requirements of paragraphs (a)(2)(i) and

(a)(2)(ii) of this section, for an event for which the Administrator determines that only diagnostic tests (*see* § 75.20(b)) are required rather than recertification testing, no hardcopy submittal is required; however, the results of all diagnostic test(s) shall be submitted prior to or concurrent with the electronic quarterly report required under § 75.64. Notwithstanding the requirement of § 75.59(e), for DAHS (missing data and formula) verifications, no hardcopy submittal is required; the owner or operator shall keep these test results on-site in a format suitable for inspection.

(b) *Contents*. Each application for initial certification or recertification shall contain the following information, as applicable:

(1) *Electronic*. (i) A complete, up-to-date version of the electronic portion of the monitoring plan, according to § 75.53(e) and (f), in the format specified in § 75.62(c).

(ii) The results of the test(s) required by § 75.20, including the type of test conducted, testing date, information required by § 75.59, and the results of any failed tests that affect data validation.

(2) *Hardcopy*. (i) Any changed portions of the hardcopy monitoring plan information required under § 75.53(e) and (f). Electronic submittal of all monitoring plan information, including the hardcopy portions, is permissible, provided that a paper copy can be furnished upon request.

(ii) The results of the test(s) required by § 75.20, including the type of test conducted, testing date, information required by § 75.59(a)(9), and the results of any failed tests that affect data validation.

(iii) [Reserved]

(iv) Designated representative signature certifying the accuracy of the submission.

(c) *Format*. The electronic portion of each certification or recertification application shall be submitted in a format to be specified by the Administrator. The hardcopy test results shall be submitted in a format suitable for review and shall include the information in § 75.59(a)(9).

[64 FR 28621, May 26, 1999, as amended at 67 FR 40443, June 12, 2002; 73 FR 4357, Jan. 24, 2008]

§ 75.64 Quarterly reports.

(a) *Electronic submission*. The designated representative for an affected unit shall electronically report the data and information in paragraphs (a), (b), and (c) of this section to the Administrator quarterly, beginning with the data from the earlier of the calendar quarter corresponding to the date of provisional certification or the calendar quarter corresponding to the relevant deadline for initial certification in § 75.4(a), (b), or (c). The initial quarterly report shall contain hourly data beginning with the hour of provisional certification or the hour corresponding to the relevant certification deadline, whichever is earlier. For an affected unit subject to § 75.4(d) that is shutdown on the relevant compliance date in § 75.4(a) or has been placed in long-term cold storage (as defined in § 72.2 of this chapter), quarterly reports are not required. In such cases, the owner or operator shall submit quarterly reports for the unit beginning with the data from the quarter in which the unit recommences commercial operation (where the initial quarterly report contains hourly data beginning with the first hour of recommenced commercial operation of the unit). For units placed into long-term cold storage during a reporting quarter, the exemption from submitting quarterly reports begins with the calendar quarter following the date that the unit is placed into long-term cold storage. For any provisionally-certified monitoring system, § 75.20(a)(3) shall apply for initial certifications, and § 75.20(b)(5) shall apply for recertifications. Each electronic report must be submitted to the Administrator within 30 days following the end of each calendar quarter. Prior to January 1, 2008, each electronic report shall include for each affected unit (or group of units using a common stack), the information provided in paragraphs (a)(1), (a)(2), and (a)(8) through (a)(15) of this section. During the time period of January 1, 2008 to January 1, 2009, each

electronic report shall include, either the information provided in paragraphs (a)(1), (a)(2), and (a)(8) through (a)(15) of this section or the information provided in paragraphs (a)(3) through (a)(15) of this section. On and after January 1, 2009, the owner or operator shall meet the requirements of paragraphs (a)(3) through (a)(15) of this section only. Each electronic report shall also include the date of report generation.

(1) Facility information:

(i) Identification, including:

(A) Facility/ORISPL number;

(B) Calendar quarter and year for the data contained in the report; and

(C) Version of the electronic data reporting format used for the report.

(ii) Location, including:

(A) Plant name and facility ID;

(B) EPA AIRS facility system ID;

(C) State facility ID;

(D) Source category/type;

(E) Primary SIC code;

(F) State postal abbreviation;

(G) County code; and

(H) Latitude and longitude.

(2) The information and hourly data required in § 75.53 and §§ 75.57 through 75.59, excluding the following:

(i) Descriptions of adjustments, corrective action, and maintenance;

(ii) Information which is incompatible with electronic reporting (e.g., field data sheets, lab analyses, quality control plan);

(iii) Opacity data listed in or § 75.57(f), and in § 75.59(a)(8);

(iv) For units with SO_2 or NO_X add-on emission controls that do not elect to use the approved site-specific parametric monitoring procedures for calculation of substitute data, the information in § 75.58(b)(3);

(v) [Reserved]

(vi) Information required by § 75.57(h) concerning the causes of any missing data periods and the actions taken to cure such causes;

(vii) Hardcopy monitoring plan information required by § 75.53 and hardcopy test data and results required by § 75.59;

(viii) Records of flow monitor and moisture monitoring system polynomial equations, coefficients, or ''K'' factors required by § 75.59(a)(5)(vi) or § 75.59(a)(5)(vii);

(ix) Daily fuel sampling information required by § 75.58(c)(3)(i) for units using assumed values under appendix D;

(x) Information required by §§ 75.59(b)(1)(vi), (vii), (viii), (ix), and (xiii), and (b)(2)(iii) and (iv) concerning fuel flowmeter accuracy tests and transmitter/transducer accuracy tests;

(xi) Stratification test results required as part of the RATA supplementary records under § 75.59(a)(7);

(xii) Data and results of RATAs that are aborted or invalidated due to problems with the reference method or operational problems with the unit and data and results of linearity checks that are aborted or invalidated due to problems unrelated to monitor performance; and

(xiii) Supplementary RATA information required under § 75.59(a)(7), except that:

(A) The applicable data elements under § 75.59(a)(7)(ii)(A) through (T) and under § 75.59(a)(7)(iii)(A) through (M) shall be reported for flow RATAs at circular or rectangular stacks (or ducts) in which angular compensation for yaw and/or pitch angles is used (*i.e.*, Method 2F or 2G in appendices A–1 and A–2 to part 60 of this chapter), with or without wall effects adjustments;

(B) The applicable data elements under § 75.59(a)(7)(ii)(A) through (T) and under § 75.59(a)(7)(iii)(A) through (M) shall be reported for any flow RATA run at a circular stack in which Method 2 in appendices A–1 and A–2 to part 60 of this chapter is used and a wall effects adjustment factor is determined by direct measurement;

(C) The data under § 75.59(a)(7)(ii)(T) shall be reported for all flow RATAs at circular stacks in which Method 2 in appendices A–1 and A–2 to part 60 of this chapter is used and a default wall effects adjustment factor is applied; and

(D) The data under § 75.59(a)(7)(ix)(A) through (F) shall be reported for all flow RATAs at rectangular stacks or ducts in which Method 2 in appendices A–1 and A–2 to part 60 of this chapter is used and a wall effects adjustment factor is applied.

(3) Facility identification information, including:

(i) Facility/ORISPL number;

(ii) Calendar quarter and year for the data contained in the report; and

(iii) Version of the electronic data reporting format used for the report.

(4) In accordance with § 75.62(a)(1), if any monitoring plan information required in § 75.53 requires an update, either under § 75.53(b) or elsewhere in this part, submission of the electronic monitoring plan update shall be completed prior to or concurrent with the submittal of the quarterly electronic data report for the appropriate quarter in which the update is required.

(5) Except for the daily calibration error test data, daily interference check, and off-line calibration demonstration information required in § 75.59(a)(1) and (2), which must always be submitted with the quarterly report, the certification, quality assurance, and quality control information required in § 75.59 shall either be submitted prior to or concurrent with the submittal of the relevant quarterly electronic data report.

(6) The information and hourly data required in §§ 75.57 through 75.59, and daily calibration error test data, daily interference check, and off-line calibration demonstration information required in § 75.59(a)(1) and (2).

(7) Notwithstanding the requirements of paragraphs (a)(4) through (a)(6) of this section, the following information is excluded from electronic reporting:

(i) Descriptions of adjustments, corrective action, and maintenance;

(ii) Information which is incompatible with electronic reporting (e.g., field data sheets, lab analyses, quality control plan);

(iii) Opacity data listed in § 75.57(f), and in § 75.59(a)(8);

(iv) For units with SO_2 or NO_X add-on emission controls that do not elect to use the approved site-specific parametric monitoring procedures for calculation of substitute data, the information in § 75.58(b)(3);

(v) Information required by § 75.57(h) concerning the causes of any missing data periods and the actions taken to cure such causes;

(vi) Hardcopy monitoring plan information required by § 75.53 and hardcopy test data and results required by § 75.59;

(vii) Records of flow monitor and moisture monitoring system polynomial equations, coefficients, or ''K'' factors required by § 75.59(a)(5)(vi) or § 75.59(a)(5)(vii);

(viii) Daily fuel sampling information required by § 75.58(c)(3)(i) for units using assumed values under appendix D of this part;

(ix) Information required by §§ 75.59(b)(1)(vi), (vii), (viii), (ix), and (xiii), and (b)(2)(iii) and (iv) concerning fuel flowmeter accuracy tests and transmitter/transducer accuracy tests;

(x) Stratification test results required as part of the RATA supplementary records under § 75.59(a)(7);

(xi) Data and results of RATAs that are aborted or invalidated due to problems with the reference method or operational problems with the unit and data and results of linearity checks that are aborted or invalidated due to problems unrelated to monitor performance; and

(xii) Supplementary RATA information required under § 75.59(a)(7)(i) through § 75.59(a)(7)(v), except that:

(A) The applicable data elements under § 75.59(a)(7)(ii)(A) through (T) and under § 75.59(a)(7)(iii)(A) through (M) shall be reported for flow RATAs at circular or rectangular stacks (or ducts) in which angular compensation for yaw and/or pitch angles is used (*i.e.*, Method 2F or 2G in appendices A–1 and A–2 to part 60 of this chapter), with or without wall effects adjustments;

(B) The applicable data elements under § 75.59(a)(7)(ii)(A) through (T) and under § 75.59(a)(7)(iii)(A) through (M) shall be reported for any flow RATA run at a circular stack in which Method 2 in appendices A–1 and A–2 to part 60 of this chapter is used and a wall effects adjustment factor is determined by direct measurement;

(C) The data under § 75.59(a)(7)(ii)(T) shall be reported for all flow RATAs at circular stacks in which Method 2 in appendices A–1 and A–2 to part 60 of this chapter is used and a default wall effects adjustment factor is applied; and

(D) The data under § 75.59(a)(7)(vii)(A) through (F) shall be reported for all flow RATAs at rectangular stacks or ducts in which Method 2 in appendices A–1 and A–2 to part 60 of this chapter is used and a wall effects adjustment factor is applied.

(8) Tons (rounded to the nearest tenth) of SO_2 emitted during the quarter and cumulative SO_2 emissions for the calendar year.

(9) Average NO_X emission rate (lb/mmBtu, rounded to the nearest thousandth) during the quarter and cumulative NO_X emission rate for the calendar year.

(10) Tons of CO_2 emitted during quarter and cumulative CO_2 emissions for calendar year.

(11) Total heat input (mmBtu) for quarter and cumulative heat input for calendar year.

(127) Unit or stack or common pipe header operating hours for quarter and cumulative unit or stack or common pipe header operating hours for calendar year.

(13) For low mass emissions units for which the owner or operator is using the optional low mass emissions methodology in §75.19(c) to calculate NO_X mass emissions, the designated representative must also report tons (rounded to the nearest tenth) of NO_X emitted during the quarter and cumulative NO_X mass emissions for the calendar year.

(14) For low mass emissions units using the optional long term fuel flow methodology under §75.19(c), for each quarter report the long term fuel flow for each fuel according to §75.58(f)(2).

(15) For units using the optional fuel flow to load procedure in section 2.1.7 of appendix D to this part, report both the fuel flow-to-load baseline data and the results of the fuel flow-to-load test each quarter.

(b) The designated representative shall affirm that the component/system identification codes and formulas in the quarterly electronic reports, submitted to the Administrator pursuant to §75.53, represent current operating conditions.

(c) *Compliance certification*. The designated representative shall submit a certification in support of each quarterly emissions monitoring report based on reasonable inquiry of those persons with primary responsibility for ensuring that all of the unit's emissions are correctly and fully monitored. The certification shall indicate whether the monitoring data submitted were recorded in accordance with the applicable requirements of this part including the quality control and quality assurance procedures and specifications of this part and its appendices, and any such requirements, procedures and specifications of an applicable excepted or approved alternative monitoring method. For a unit with add-on emission controls, the designated representative shall also include a certification, for all hours where data are substituted following the provisions of §75.34(a)(1), that the add-on emission controls were operating within the range of parameters listed in the monitoring plan and that the substitute values recorded during the quarter do not systematically underestimate SO_2 or NO_X emissions, pursuant to §75.34.

(d) *Electronic format*. Each quarterly report shall be submitted in a format to be specified by the Administrator, including both electronic submission of data and (unless otherwise approved by the Administrator) electronic submission of compliance certifications.

(e) [Reserved]

(f) *Method of submission*. Beginning with the quarterly report for the first quarter of the year 2001, all quarterly reports shall be submitted to EPA by direct computer-to-computer electronic transfer via EPA-provided software, unless otherwise approved by the Administrator.

(g) Any cover letter text accompanying a quarterly report shall either be submitted in hardcopy to the Agency or be provided in electronic format compatible with the other data required to be reported under this section.

[64 FR 28622, May 26, 1999, as amended at 67 FR 40444, June 12, 2002; 73 FR 4357, Jan. 24, 2008]

§ 75.65 Opacity reports.

The owner or operator or designated representative shall report excess emissions of opacity recorded under §75.57(f) to the applicable State or local air pollution control agency.

[64 FR 28623, May 26, 1999, as amended at 67 FR 40444, June 12, 2002]

§ 75.66 Petitions to the Administrator.

(a) *General.* The designated representative for an affected unit subject to the requirements of this part may submit a petition to the Administrator requesting that the Administrator exercise his or her discretion to approve an alternative to any requirement prescribed in this part or incorporated by reference in this part. Any such petition shall be submitted in accordance with the requirements of this section. The designated representative shall comply with the signatory requirements of § 72.21 of this chapter for each submission.

(b) *Alternative flow monitoring method petition.* In cases where no location exists for installation of a flow monitor in either the stack or the ducts serving an affected unit that satisfies the minimum physical siting criteria in appendix A of this part or where installation of a flow monitor in either the stack or duct is demonstrated to the satisfaction of the Administrator to be technically infeasible, the designated representative for the affected unit may petition the Administrator for an alternative method for monitoring volumetric flow. The petition shall, at a minimum, contain the following information:

(1) Identification of the affected unit(s);

(2) Description of why the minimum siting criteria cannot be met within the existing ductwork or stack(s). This description shall include diagrams of the existing ductwork or stack, as well as documentation of any attempts to locate a flow monitor; and

(3) Description of proposed alternative method for monitoring flow.

(c) *Alternative to standards incorporated by reference.* The designated representative for an affected unit may apply to the Administrator for an alternative to any standard incorporated by reference and prescribed in this part. The designated representative shall include the following information in an application:

(1) A description of why the prescribed standard is not being used;

(2) A description and diagram(s) of any equipment and procedures used in the proposed alternative;

(3) Information demonstrating that the proposed alternative produces data acceptable for use in the Acid Rain Program, including accuracy and precision statements, NIST traceability certificates or protocols, or other supporting data, as applicable to the proposed alternative.

(d) *Alternative monitoring system petitions.* The designated representative for an affected unit may submit a petition to the Administrator for approval and certification of an alternative monitoring system or component according to the procedure in subpart E of this part. Each petition shall contain the information and data specified in subpart E, including the information specified in § 75.48, in a format to be specified by the Administrator.

(e) *Parametric monitoring procedure petitions.* The designated representative for an affected unit may submit a petition to the Administrator, where each petition shall contain the information specified in § 75.58(b) for the use of a parametric monitoring method. The Administrator will either:

(1) Publish a notice in the FEDERAL REGISTER indicating receipt of a parametric monitoring procedure petition;, or

(2) Notify interested parties of receipt of a parametric monitoring petition.

(f) [Reserved]

(g) *Petitions for emissions or heat input apportionments.* The designated representative of an affected unit shall provide information to describe a method for emissions or heat input apportionment under §§ 75.13, 75.16, 75.17, or appendix D of this part. This petition may be submitted as part of the monitoring plan. Such a petition shall contain, at a minimum, the following information:

(1) A description of the units, including their fuel type, their boiler type, and their categorization as Phase I units, substitution units, compensating units, Phase II units, new units, or non-affected units;

(2) A formula describing how the emissions or heat input are to be apportioned to which units;

(3) A description of the methods and parameters used to apportion the emissions or heat input; and

(4) Any other information necessary to demonstrate that the apportionment method accurately measures emissions or heat input and does not underestimate emissions or heat input from affected units.

(h) *Partial recertification petition*. The designated representative of an affected unit may provide information and petition the Administrator to specify which of the certification tests required by § 75.20 apply for partial recertification of the affected unit. Such a petition shall include the following information:

(1) Identification of the monitoring system(s) being changed;

(2) A description of the changes being made to the system;

(3) An explanation of why the changes are being made; and

(4) A description of the possible effect upon the monitoring system's ability to measure, record, and report emissions.

(i) [Reserved]

(j) *Petition for alternative method of accounting for emissions prior to completion of certification tests*. The designated representative for an affected unit may submit a petition to the Administrator to use an alternative to the procedures in § 75.4(d)(3), (e)(3), (f)(3) or (g)(3) to account for emissions during the period between the compliance date for a unit and the completion of certification testing for that unit. The designated representative shall include:

(1) Identification of the affected unit(s);

(2) A detailed explanation of the alternative method to account for emissions of the following parameters, as applicable: SO_2 mass emissions (in lbs), NO_X emission rate (in lbs/mmBtu), CO_2 mass emissions (in lbs) and, if the unit is subject to the requirements of subpart H of this part, NO_X mass emissions (in lbs); and

(3) A demonstration that the proposed alternative does not underestimate emissions.

(k) *Petition for an alternative to the stabilization criteria for the cycle time test in section 6.4 of appendix A to this part*. The designated representative for an affected unit may submit a petition to the Administrator to use an alternative stabilization criteria for the cycle time test in section 6.4 of appendix A to this part, if the installed monitoring system does not record data in 1-minute or 3-minute intervals. The designated representative shall provide a description of the alternative criteria.

(l) *Any other petitions to the Administrator under this part*. Except for petitions addressed in paragraphs (b) through (k) of this section, any petition submitted under this paragraph shall include sufficient information for the evaluation of the petition, including, at a minimum, the following information:

(1) Identification of the affected plant and unit(s);

(2) A detailed explanation of why the proposed alternative is being suggested in lieu of the requirement;

(3) A description and diagram of any equipment and procedures used in the proposed alternative, if applicable;

(4) A demonstration that the proposed alternative is consistent with the purposes of the requirement for which the alternative is proposed and is consistent with the purposes of this part and of section 412 of the Act and that any adverse effect of approving such alternative will be *de minimis*; and

(5) Any other relevant information that the Administrator may require.

[58 FR 3701, Jan. 11, 1993,as amended at 60 FR 26540, 26569, May 17, 1995; 61 FR 59162, Nov. 20, 1996; 64 FR 28623, May 26, 1999; 67 FR 40444, June 12, 2002; 73 FR 4358, Jan. 24, 2008]

§ 75.67 Retired units petitions.

(a) [Reserved]

(b) For combustion sources seeking to enter the Opt-in Program in accordance with part 74 of this chapter that will be permanently retired and governed upon entry into the Opt-in Program by a thermal energy plan in accordance with § 74.47 of this chapter, an exemption from the requirements of this part, including the requirement to install and certify a continuous emissions monitoring system, may be obtained from the Administrator if the designated representative submits to the Administrator a petition for such an exemption prior to the deadline in § 75.4 by which the continuous emission or opacity monitoring systems must

complete the required certification tests.

[60 FR 17131, Apr. 4, 1995, as amended at 60 FR 26541, May 17, 1995; 62 FR 55487, Oct. 24, 1997]

Subpart H—NO_X Mass Emissions Provisions

SOURCE: 63 FR 57507, Oct. 27, 1998, unless otherwise indicated.

§ 75.70 NO_X mass emissions provisions.

(a) *Applicability*. The owner or operator of a unit shall comply with the requirements of this subpart to the extent that compliance is required by an applicable State or federal NO_X mass emission reduction program that incorporates by reference, or otherwise adopts the provisions of, this subpart.

(1) For purposes of this subpart, the term ''affected unit'' shall mean any unit that is subject to a State or federal NO_X mass emission reduction program requiring compliance with this subpart, the term ''non-affected unit'' shall mean any unit that is not subject to such a program, the term ''permitting authority'' shall mean the permitting authority under an applicable State or federal NO_X mass emission reduction program that adopts the requirements of this subpart, and the term ''designated representative'' shall mean the responsible party under the applicable State or federal NO_X mass emission reduction program that adopts the requirements of this subpart.

(2) In addition, the provisions of subparts A, C, D, E, F, and G and appendices A through G of this part applicable to NO_X concentration, flow rate, NO_X emission rate and heat input, as set forth and referenced in this subpart, shall apply to the owner or operator of a unit required to meet the requirements of this subpart by a State or federal NO_X mass emission reduction program. When applying these requirements, the term ''affected unit'' shall mean any unit that is subject to a State or federal NO_X mass emission reduction program requiring compliance with this subpart, the term ''permitting authority'' shall mean the permitting authority under an applicable State or federal NO_X mass emission reduction program that adopts the requirements of this subpart, and the term ''designated representative'' shall mean the responsible party under the applicable State or federal NO_X mass emission reduction program that adopts the requirements of this subpart. The requirements of this part for SO_2, CO_2 and opacity monitoring, recordkeeping and reporting do not apply to units that are subject to a State or federal NO_X mass emission reduction program only and are not affected units with an Acid Rain emission limitation.

(b) *Compliance dates*. The owner or operator of an affected unit shall meet the compliance deadlines established by an applicable State or federal NO_X mass emission reduction program that adopts the requirements of this subpart.

(c) *Prohibitions*. (1) No owner or operator of an affected unit or a non-affected unit under § 75.72(b)(2)(ii) shall use any alternative monitoring system, alternative reference method, or any other alternative for the required continuous emission monitoring system without having obtained prior written approval in accordance with paragraph (h) of this section.

(2) No owner or operator of an affected unit or a non-affected unit under § 75.72(b)(2)(ii) shall operate the unit so as to discharge, or allow to be discharged emissions of NO_X to the atmosphere without accounting for all such emissions in accordance with the applicable provisions of this part, except as provided in § 75.74.

(3) No owner or operator of an affected unit or a non-affected unit under § 75.72(b)(2)(ii) shall disrupt the continuous emission monitoring system, any portion thereof, or any other approved emission monitoring method, and thereby avoid monitoring and recording NO_X mass emissions discharged into the atmosphere, except for periods of recertification or periods when calibration, quality assurance testing, or maintenance is performed in accordance with the provisions of this part applicable to monitoring systems under § 75.71, except as provided in § 75.74.

(4) No owner or operator of an affected unit or a non-affected unit under § 75.72(b)(2)(ii) shall retire or permanently discontinue use of the continuous emission monitoring system, any component thereof, or any other approved emission monitoring system under this part, except under any one of the following circumstances:

(i) During the period that the unit is covered by a retired unit exemption that is in effect under the State or federal NO_X mass emission reduction program that adopts the requirements of this subpart;

(ii) The owner or operator is monitoring NO_X mass emissions from the affected unit with another certified monitoring system approved, in accordance with the provisions of paragraph (d) of this section; or

(iii) The designated representative submits notification of the date of certification testing of a replacement monitoring system in accordance with § 75.61.

(d) *Initial certification and recertification procedures.* (1) The owner or operator of an affected unit that is subject to an Acid Rain emissions limitation shall comply with the initial certification and recertification procedures in § 75.20 of this part, except that the owner or operator shall meet any additional requirements set forth in an applicable State or federal NO_X mass emission reduction program that adopts the requirements of this subpart.

(2) The owner or operator of an affected unit that is not subject to an Acid Rain emissions limitation shall comply with the initial certification and recertification procedures established by an applicable State or federal NO_X mass emission reduction program that adopts the requirements of this subpart. The owner or operator of an affected unit that is subject to an Acid Rain emissions limitation shall comply with the initial certification and recertification procedures established by an applicable State or federal NO_X mass emission reduction program that adopts the requirements of this subpart for any additional NO_X-diluent CEMS, flow monitors, diluent monitors or NO_X concentration monitoring system required under the NO_X mass emissions provisions of § 75.71 or the common stack provisions in § 75.72.

(e) *Quality assurance and quality control requirements.* For units that use continuous emission monitoring systems to account for NO_X mass emissions, the owner or operator shall meet the applicable quality assurance and quality control requirements in § 75.21, appendix B to this part, and § 75.74(c) for the NO_X-diluent continuous emission monitoring systems, flow monitoring systems, NO_X concentration monitoring systems, moisture monitoring systems, and diluent monitors required under § 75.71. Units using the low mass emissions excepted methodology under § 75.19 shall meet the applicable quality assurance requirements of that section, except as otherwise provided in § 75.74(c). Units using excepted monitoring methods under appendices D and E to this part shall meet the applicable quality assurance requirements of those appendices.

(f) *Missing data procedures.* Except as provided in § 75.34, paragraph (g) of this section, and § 75.74(c)(7), the owner or operator shall provide substitute data from monitoring systems required under § 75.71 for each affected unit as follows:

(1) For an owner or operator using a continuous emissions monitoring system, substitute for missing data in accordance with the applicable missing data procedures in §§ 75.31 through 75.37 whenever the unit combusts fuel and:

(i) A valid, quality-assured hour of NO_X emission rate data (in lb/mmBtu) has not been measured and recorded for a unit by a certified NO_X-diluent continuous emission monitoring system or by an approved monitoring system under subpart E of this part;

(ii) A valid, quality-assured hour of flow data (in scfh) has not been measured and recorded for a unit from a certified flow monitor or by an approved alternative monitoring system under subpart E of this part;

(iii) A valid, quality-assured hour of heat input rate data (in mmBtu/hr) has not been measured and recorded for a unit from a certified flow monitor and a certified diluent (CO_2 or O_2) monitor or by an approved alternative monitoring system under subpart E of this

part, where heat input is required either for calculating NO_X mass or allocating allowances under the applicable State or federal NO_X mass emission reduction program that adopts the requirements of this subpart;

(iv) A valid, quality-assured hour of NO_X concentration data (in ppm) has not been measured and recorded by a certified NO_X concentration monitoring system, or by an approved alternative monitoring method under subpart E of this part, where the owner or operator chooses to use a NO_X concentration monitoring system with a flow monitor, to calculate NO_X mass emissions. The initial missing data procedures for determining monitor data availability and the standard missing data procedures for a NO_X concentration monitoring system shall be the same as the procedures specified for a NO_X-diluent continuous emission monitoring system under §§ 75.31, 75.32, and 75.33; or

(v) A valid, quality-assured hour of moisture data (in percent H_2O) has not been measured or recorded for an affected unit, either by a certified moisture monitoring system or an approved alternative monitoring method under subpart E of this part. This requirement does not apply when a default percent moisture value, as provided in § 75.11(b) or § 75.12(b), is used to account for the hourly moisture content of the stack gas.

(2) For an owner or operator using an excepted monitoring system under appendix D or E of this part, substitute for missing data in accordance with the missing data procedures in section 2.4 of appendix D to this part or in section 2.5 of appendix E to this part whenever the unit combusts fuel and:

(i) A valid, quality-assured hour of fuel flow rate data has not been measured and recorded by a certified fuel flowmeter that is part of an excepted monitoring system under appendix D or E of this part; or

(ii) A fuel sample value for gross calorific value, or if necessary, density or specific gravity, from a sample taken an analyzed in accordance with appendix D of this part is not available; or

(iii) A valid, quality-assured hour of NO_X emission rate data has not been obtained according to the procedures and specifications of appendix E to this part.

(g) *Reporting data prior to initial certification.* If the owner or operator of an affected unit has not successfully completed all certification tests required by the State or federal NO_X mass emission reduction program that adopts the requirements of this subpart by the applicable date required by that program, he or she shall determine, record and report hourly data prior to initial certification using one of the following procedures, consistent with the monitoring equipment to be certified:

(1) For units that the owner or operator intends to monitor for NO_X mass emissions using NO_X emission rate and heat input rate, the maximum potential NO_X emission rate and the maximum potential hourly heat input of the unit, as defined in § 72.2 of this chapter.

(2) For units that the owner or operator intends to monitor for NO_X mass emissions using a NO_X concentration monitoring system and a flow monitoring system, the maximum potential concentration of NO_X and the maximum potential flow rate, as defined in section 2.1.4.1 of appendix A to this part;

(3) For any unit, the reference methods under § 75.22 of this part.

(4) For any unit using the low mass emission excepted monitoring methodology under § 75.19, the procedures in paragraphs (g)(1) or (2) of this section.

(5) Any unit using the procedures in paragraph (g)(2) of this section that is required to report heat input for purposes of allocating allowances shall also report the maximum potential hourly heat input of the unit, as defined in § 72.2 of this chapter.

(6) For any unit using continuous emissions monitors, the conditional data validation procedures in § 75.20(b)(3)(ii) through (b)(3)(ix).

(h) *Petitions.* (1) The designated representative of an affected unit that is subject to an Acid Rain emissions limitation may submit a petition to the Administrator requesting an alternative to any requirement of this subpart. Such a petition shall meet the requirements of § 75.66 and any additional

requirements established by an applicable State or federal NO_X mass emission reduction program that adopts the requirements of this subpart. Use of an alternative to any requirement of this subpart is in accordance with this subpart and with such State or federal NO_X mass emission reduction program only to the extent that the petition is approved by the Administrator, in consultation with the permitting authority.

(2) Notwithstanding paragraph (h)(1) of this section, petitions requesting an alternative to a requirement concerning any additional CEMS required solely to meet the common stack provisions of § 75.72 shall be submitted to the permitting authority and the Administrator and shall be governed by paragraph (h)(3)(ii) of this section. Such a petition shall meet the requirements of § 75.66 and any additional requirements established by an applicable State or federal NO_X mass emission reduction program that adopts the requirements of this subpart.

(3)(i) The designated representative of an affected unit that is not subject to an Acid Rain emissions limitation may submit a petition to the permitting authority and the Administrator requesting an alternative to any requirement of this subpart. Such a petition shall meet the requirements of § 75.66 and any additional requirements established by an applicable State or federal NO_X mass emission reduction program that adopts the requirements of this subpart.

(ii) Use of an alternative to any requirement of this subpart is in accordance with this subpart only to the extent that it is approved by the Administrator and by the permitting authority if required by an applicable State or federal NO_X mass emission reduction program that adopts the requirements of this subpart.

[63 FR 57507, Oct. 27, 1998, as amended at 64 FR 28624, May 26, 1999; 67 FR 40444, June 12, 2002]

§ 75.71 Specific provisions for monitoring NO_X and heat input for the purpose of calculating NO_X mass emissions.

(a) *Coal-fired units.* The owner or operator of a coal-fired affected unit shall either:

(1) Meet the general operating requirements in § 75.10 for a NO_X-diluent continuous emission monitoring system (consisting of a NO_X pollutant concentration monitor, an O_2 or CO_2 diluent gas monitor, and a data acquisition and handling system) to measure NO_X emission rate and for a flow monitoring system and an O_2 or CO_2 diluent gas monitoring system to measure heat input rate, except as provided in accordance with subpart E of this part; or

(2) Meet the general operating requirements in § 75.10 for a NO_X concentration monitoring system (consisting of a NO_X pollutant concentration monitor and a data acquisition and handling system) to measure NO_X concentration and for a flow monitoring system. In addition, if heat input is required to be reported under the applicable State or federal NO_X mass emission reduction program that adopts the requirements of this subpart, the owner or operator also must meet the general operating requirements for a flow monitoring system and an O_2 or CO_2 monitoring system to measure heat input rate. These requirements must be met, except as provided in accordance with subpart E of this part.

(b) *Moisture correction.* (1) If a correction for the stack gas moisture content is needed to properly calculate the NO_X emission rate in lb/mmBtu (e.g., if the NO_X pollutant concentration monitor in a NO_X-diluent monitoring system measures on a different moisture basis from the diluent monitor), or to calculate the heat input rate, the owner or operator of an affected unit shall account for the moisture content of the flue gas on a continuous basis in accordance with § 75.12(b).

(2) If a correction for the stack gas moisture content is needed to properly calculate NO_X mass emissions in tons, in the case where a NO_X concentration monitoring system which measures on a dry basis is used with a flow rate

monitor to determine NO_X mass emissions, the owner or operator of an affected unit shall account for the moisture content of the flue gas on a continuous basis in accordance with § 75.11(b) except that the term ''SO_2'' shall be replaced by the term ''NO_X.''

(3) If a correction for the stack gas moisture content is needed to properly calculate NO_X mass emissions, in the case where a diluent monitor that measures on a dry basis is used with a flow rate monitor to determine heat input rate, which is then multiplied by the NO_X emission rate, the owner or operator shall install, operate, maintain, and quality assure a continuous moisture monitoring system, as described in § 75.11(b).

(c) *Gas-fired nonpeaking units or oil-fired nonpeaking units.* The owner or operator of an affected unit that, based on information submitted by the designated representative in the monitoring plan, qualifies as a gas-fired or oil-fired unit but not as a peaking unit, as defined in § 72.2 of this chapter, shall either:

(1) Meet the requirements of paragraph (a) of this section and, if applicable, paragraph (b) of this section; or

(2) Meet the general operating requirements in § 75.10 for a NO_X-diluent continuous emission monitoring system, except as provided in accordance with subpart E of this part, and use the procedures specified in appendix D to this part for determining hourly heat input rate. However, for a common pipe configuration, the heat input rate apportionment provisions in section 2.1.2 of appendix D to this part shall not be used to meet the NO_X mass reporting provisions of this subpart, unless all of the units served by the common pipe are affected units and have similar efficiencies; or

(3) Meet the requirements of the low mass emission excepted methodology under paragraph (e)(2) of this section and under § 75.19, if applicable.

(d) *Gas-fired or oil-fired peaking units.* The owner or operator of an affected unit that qualifies as a peaking unit and as either gas-fired or oil-fired, as defined in § 72.2 of this chapter, based on information submitted by the designated representative in the monitoring plan, shall either:

(1) Meet the requirements of paragraph (c) of this section; or

(2) Use the procedures in appendix D to this part for determining hourly heat input and the procedure specified in appendix E to this part for estimating hourly NO_X emission rate. However, for a common pipe configuration, the heat input apportionment provisions in section 2.1.2 of appendix D to this part shall not be used to meet the NO_X mass reporting provisions of this subpart unless all of the units served by the common pipe are affected units and have similar efficiencies. In addition, if after certification of an excepted monitoring system under appendix E to this part, the operation of a unit that reports emissions on an annual basis under § 75.74(a) of this part exceeds a capacity factor of 20.0 percent in any calendar year or exceeds an annual capacity factor of 10.0 percent averaged over three years, or the operation of a unit that reports emissions on an ozone season basis under § 75.74(b) of this part exceeds a capacity factor of 20.0 percent in any ozone season or exceeds an ozone season capacity factor of 10.0 percent averaged over three years, the owner or operator shall meet the requirements of paragraph (c)(1) or (c)(2) of this section by no later than December 31 of the following calendar year. If the required CEMS are not installed and certified by that date, the owner or operator shall report hourly NO_X mass emissions as the product of the maximum potential NO_X emission rate (MER) and the maximum hourly heat input of the unit (as defined in § 72.2 of this chapter), starting with the first unit operating hour after the deadline and continuing until the CEMS are provisionally certified.

(e) *Low mass emissions units.* Notwithstanding the requirements of paragraphs (c) and (d) of this section, for an affected unit using the low mass emissions (LME) unit under § 75.19 to estimate hourly NO_X emission rate, heat input and NO_X mass emissions, the owner or operator shall calculate the ozone season NO_X mass emissions by summing all of the estimated hourly NO_X mass emissions in the ozone season, as determined under § 75.19 (c)(4)(ii)(A), and dividing this sum by 2000 lb/ton.

(f) *Other units.* The owner or operator of an affected unit that combusts wood, refuse, or other materials shall comply with the monitoring provisions specified in paragraph (a) of this section and, where applicable, paragraph (b) of this section.

[63 FR 57508, Oct. 27, 1998, as amended at 64 FR 28624, May 26, 1999; 67 FR 40444, 40445, June 12, 2002; 67 FR 53505, Aug. 16, 2002; 73 FR 4358, Jan. 24, 2008]

§ 75.72 Determination of NO_X mass emissions for common stack and multiple stack configurations.

The owner or operator of an affected unit shall either: calculate hourly NO_X mass emissions (in lbs) by multiplying the hourly NO_X emission rate (in lbs/mmBtu) by the hourly heat input rate (in mmBtu/hr) and the unit or stack operating time (as defined in § 72.2), or, as provided in paragraph (e) of this section, calculate hourly NO_X mass emissions from the hourly NO_X concentration (in ppm) and the hourly stack flow rate (in scfh). Only one methodology for determining NO_X mass emissions shall be identified in the monitoring plan for each monitoring location at any given time. The owner or operator shall also calculate quarterly and cumulative year-to-date NO_X mass emissions and cumulative NO_X mass emissions for the ozone season (in tons) by summing the hourly NO_X mass emissions according to the procedures in section 8 of appendix F to this part.

(a) *Unit utilizing common stack with other affected unit(s).* When an affected unit utilizes a common stack with one or more affected units, but no nonaffected units, the owner or operator shall either:

(1) Install, certify, operate, and maintain a NO_X-diluent continuous emissions monitoring system and a flow monitoring system in the common stack, record the combined NO_X mass emissions for the units exhausting to the common stack, and, for purposes of determining the hourly unit heat input rates, either:

(i) Apportion the common stack heat input rate to the individual units according to the procedures in § 75.16(e)(3); or

(ii) Install, certify, operate, and maintain a flow monitoring system and diluent monitor in the duct to the common stack from each unit; or

(iii) If any of the units using the common stack are eligible to use the procedures in appendix D to this part,

(A) Use the procedures in appendix D to this part to determine heat input rate for that unit; and

(B) Install, certify, operate, and maintain a flow monitoring system and a diluent monitor in the duct to the common stack for each remaining unit; or

(2) Install, certify, operate, and maintain a NO_X-diluent continuous emissions monitoring system in the duct to the common stack from each unit and, for purposes of heat input determination, either:

(i) Install, certify, operate, and maintain a flow monitoring system in the duct to the common stack from each unit; or

(ii) For any unit using the common stack and eligible to use the procedures in appendix D to this part,

(A) Use the procedures in appendix D to determine heat input rate for that unit; and

(B) Install, certify, operate, and maintain a flow monitoring system in the duct to the common stack for each remaining unit.

(b) *Unit utilizing common stack with nonaffected unit(s).* When one or more affected units utilizes a common stack with one or more nonaffected units, the owner or operator shall either:

(1) Install, certify, operate, and maintain a NO_X-diluent continuous emission monitoring system in the duct to the common stack from each affected unit and, for purposes of heat input determination,

(i) Install, certify, operate, and maintain a flow monitoring system in the duct to the common stack from each affected unit; or

(ii) For any affected unit using the common stack and eligible to use the procedures in appendix D to this part,

(A) Use the procedures in appendix D to determine heat input for that unit; however, for a common pipe configuration, the heat input apportionment provisions in section 2.1.2 of appendix D to this part shall not be used to meet the NO_X mass reporting provisions of this subpart unless all of the units

served by the common pipe are affected units and have similar efficiencies; and

(B) Install, certify, operate, and maintain a flow monitoring system in the duct to the common stack for each remaining affected unit that exhausts to the common stack; or

(2) Install, certify, operate, and maintain a NO_X-diluent continuous emission monitoring system in the common stack; and

(i) Designate the nonaffected units as affected units in accordance with the applicable State or federal NO_X mass emissions reduction program and meet the requirements of paragraph (a)(1) of this section; or

(ii) Install, certify, operate, and maintain a flow monitoring system in the common stack and a NO_X-diluent continuous emission monitoring system in the duct to the common stack from each nonaffected unit. The designated representative shall submit a petition to the permitting authority and the Administrator to allow a method of calculating and reporting the NO_X mass emissions from the affected units as the difference between NO_X mass emissions measured in the common stack and NO_X mass emissions measured in the ducts of the nonaffected units, not to be reported as an hourly value less than zero. The permitting authority and the Administrator may approve such a method whenever the designated representative demonstrates, to the satisfaction of the permitting authority and the Administrator, that the method ensures that the NO_X mass emissions from the affected units are not underestimated. In addition, the owner or operator shall also either:

(A) Install, certify, operate, and maintain a flow monitoring system in the duct from each nonaffected unit or,

(B) For any nonaffected unit exhausting to the common stack and otherwise eligible to use the procedures in appendix D to this part, determine heat input rate using the procedures in appendix D for that unit. However, for a common pipe serving both affected and non-affected units, the heat input rate apportionment provisions in section 2.1.2 of appendix D to this part shall not be used to meet the NO_X mass reporting provisions of this subpart. For any remaining nonaffected unit that exhausts to the common stack, install, certify, operate, and maintain a flow monitoring system in the duct to the common stack; or

(iii) Install a flow monitoring system in the common stack and record the combined emissions from all units as the combined NO_X mass emissions for the affected units for recordkeeping and compliance purposes, in accordance with paragraph (a) of this section; or

(iv) Submit a petition to the permitting authority and the Administrator to allow use of a method for apportioning NO_X mass emissions measured in the common stack to each of the units using the common stack and for reporting the NO_X mass emissions. The permitting authority and the Administrator may approve such a method whenever the designated representative demonstrates, to the satisfaction of the permitting authority and the Administrator, that the method ensures that the NO_X mass emissions from the affected units are not underestimated.

(c) *Unit with a main stack and a bypass stack.* Whenever any portion of the flue gases from an affected unit can be routed through a bypass stack to avoid the installed NO_X-diluent continuous emissions monitoring system or NO_X concentration monitoring system, the owner and operator shall either:

(1) Install, certify, operate, and maintain separate NO_X-diluent continuous emissions monitoring systems and flow monitoring systems on the main stack and the bypass stack and calculate NO_X mass emissions for the unit as the sum of the NO_X mass emissions measured at the two stacks;

(2) Monitor NO_X mass emissions at the main stack using a NO_X-diluent CEMS and a flow monitoring system and measure NO_X mass emissions at the bypass stack using the reference methods in § 75.22(b) for NO_X concentration, flow rate, and diluent gas concentration, or NO_X concentration and flow rate, and calculate NO_X mass emissions for the unit as the sum of the emissions recorded by the installed monitoring systems on the main stack and the emissions measured by the reference method monitoring systems; or

(3) Install, certify, operate, and maintain a NO_X-diluent CEMS and a flow monitoring system only on the main stack. If this option is chosen, it is not necessary to designate the exhaust configuration as a multiple stack configuration in the monitoring plan required under § 75.53, since only the main stack is monitored. For each unit operating hour in which the bypass stack is used and the emissions are either uncontrolled (or the add-on controls are not documented to be operating properly), report NO_X mass emissions as follows. If the unit heat input is determined using a flow monitor and a diluent monitor, report NO_X mass emissions using the maximum potential NO_X emission rate, the maximum potential flow rate, and either the maximum potential CO_2 concentration or the minimum potential O_2 concentration (as applicable). The maximum potential NO_X emission rate may be specific to the type of fuel combusted in the unit during the bypass (see § 75.33(c)(8)). If the unit heat input is determined using a fuel flowmeter, in accordance with appendix D to this part, report NO_X mass emissions as the product of the maximum potential NO_X emission rate and the actual measured hourly heat input rate. Alternatively, for a unit with NO_X add-on emission controls, for each unit operating hour in which the bypass stack is used but the add-on NO_X emission controls are not bypassed, the owner or operator may report the maximum controlled NO_X emission rate (MCR) instead of the maximum potential NO_X emission rate provided that the add-on controls are documented to be operating properly, as described in the quality assurance/quality control program for the unit, required by section 1 in appendix B of this part. To provide the necessary documentation, the owner or operator shall record parametric data to verify the proper operation of the NO_X add-on emission controls as described in § 75.34(d). Furthermore, the owner or operator shall calculate the MCR using the procedure described in section 2.1.2.1(b) of appendix A to this part by replacing the words ''maximum potential NO_X emission rate (MER)'' with the words ''maximum controlled NO_X emission rate (MCR)'' and by using the NO_X MEC in the calculations instead of the NO_X MPC.

(d) *Unit with multiple stack or duct configuration.* When the flue gases from an affected unit discharge to the atmosphere through more than one stack, or when the flue gases from an affected unit utilize two or more ducts feeding into a single stack and the owner or operator chooses to monitor in the ducts rather than in the stack, the owner or operator shall either:

(1) Install, certify, operate, and maintain a NO_X-diluent continuous emission monitoring system and a flow monitoring system in each of the multiple stacks and determine NO_X mass emissions from the affected unit as the sum of the NO_X mass emissions recorded for each stack. If another unit also exhausts flue gases into one of the monitored stacks, the owner or operator shall comply with the applicable requirements of paragraphs (a) and (b) of this section, in order to properly determine the NO_X mass emissions from the units using that stack;

(2) Install, certify, operate, and maintain a NO_X-diluent continuous emissions monitoring system and a flow monitoring system in each of the ducts that feed into the stack, and determine NO_X mass emissions from the affected unit using the sum of the NO_X mass emissions measured at each duct; or

(3) If the unit is eligible to use the procedures in appendix D to this part and if the conditions and restrictions of § 75.17(c)(2) are fully met, install, certify, operate, and maintain a NO_X-diluent continuous emissions monitoring system in one of the ducts feeding into the stack or in one of the multiple stacks, (as applicable) in accordance with § 75.17(c)(2), and use the procedures in appendix D to this part to determine heat input rate for the unit.

(e) *Units using a NO_X concentration monitoring system and a flow monitoring system to determine NO_X mass.* The owner or operator may use a NO_X concentration monitoring system and a flow monitoring system to determine NO_X mass emissions for the cases described in paragraphs (a) through (c) of this section and in paragraph (d)(1) or paragraph (d)(2) of this section (in place of a NO_X-diluent continuous emissions monitoring system and a

flow monitoring system). However, this option may not be used for the case described in paragraph (d)(3) of this section. When using this approach, calculate NO_X mass according to sections 8.2 and 8.3 in appendix F to this part. In addition, if an applicable State or federal NO_X mass reduction program requires determination of a unit's heat input, the owner or operator must either:

(1) Install, certify, operate, and maintain a CO_2 or O_2 diluent monitor in the same location as each flow monitoring system. In addition, the owner or operator must provide heat input rate values for each unit utilizing a common stack. The owner or operator may either:

(i) Apportion heat input rate from the common stack to each unit according to § 75.16(e)(3), where all units utilizing the common stack are affected units, or

(ii) Measure heat input from each affected unit, using a flow monitor and a CO_2 or O_2 diluent monitor in the duct from each affected unit; or

(2) For units that are eligible to use appendix D to this part, use the procedures in appendix D to this part to determine heat input rate for the unit. However, the use of a fuel flowmeter in a common pipe header and the provisions of sections 2.1.2.1 and 2.1.2.2 of appendix D of this part are not applicable to any unit that is using the provisions of this subpart to monitor, record, and report NO_X mass emissions under a State or federal NO_X mass emission reduction program and that shares a common pipe with a nonaffected unit.

(f) [Reserved]

(g) *Procedures for apportioning heat input to the unit level.* If the owner or operator of a unit using the common stack monitoring provisions in paragraphs (a) or (b) of this section does not monitor and record heat input at the unit level and the owner or operator is required to do so under an applicable State or federal NO_X mass emission reduction program, apportion heat input from the common stack to each unit according to § 75.16(e)(3).

[63 FR 57507, Oct. 27, 1998, as amended at 67 FR 40445, June 12, 2002; 73 FR 4358, Jan. 24, 2008]

§ 75.73 Recordkeeping and reporting.

(a) *General recordkeeping provisions.* The owner or operator of any affected unit shall maintain for each affected unit and each non-affected unit under § 75.72(b)(2)(ii) a file of all measurements, data, reports, and other information required by this part at the source in a form suitable for inspection for at least three (3) years from the date of each record. Except for the certification data required in § 75.57(a)(4) and the initial submission of the monitoring plan required in § 75.57(a)(5), the data shall be collected beginning with the earlier of the date of provisional certification or the compliance deadline in § 75.70(b). The certification data required in § 75.57(a)(4) shall be collected beginning with the date of the first certification test performed. The file shall contain the following information:

(1) The information required in §§ 75.57(a)(2), (a)(4), (a)(5), (a)(6), (b), (c)(2), (d), (g), and (h).

(2) The information required in §§ 75.58(b)(2) or (b)(3) (for units with add-on NO_X emission controls), as applicable, (d) (as applicable for units using Appendix E to this part), and (f) (as applicable for units using the low mass emissions unit provisions of § 75.19).

(3) For each hour when the unit is operating, NO_X mass emissions, calculated in accordance with section 8.1 of appendix F to this part.

(4) During the second and third calendar quarters, cumulative ozone season heat input and cumulative ozone season operating hours.

(5) Heat input and NO_X methodologies for the hour.

(6) *Specific heat input record provisions for gas-fired or oil-fired units using the procedures in appendix D to this part.* In lieu of the information required in § 75.57(c)(2), the owner or operator shall record the information in § 75.58(c) for each affected gas-fired or oil-fired unit and each non-affected gas- or oil-fired unit under § 75.72(b)(2)(ii) for which the owner or operator is using the procedures in appendix D to this part for estimating heat input.

(7) *Specific NO_X record provisions for gas-fired or oil-fired units using the optional low mass emissions excepted methodology in § 75.19.* In lieu of recording the information in §§ 75.57(b), (c)(2), (d), and (g), the owner or operator shall record, for each hour when the unit is operating for any portion of the hour, the following information for each affected low mass emissions unit for which the owner or operator is using the low mass emissions excepted methodology in § 75.19(c):

(i) Date and hour;

(ii) If one type of fuel is combusted in the hour, fuel type (pipeline natural gas, natural gas, residual oil, or diesel fuel) or, if more than one type of fuel is combusted in the hour, the fuel type which results in the highest emission factors for NO_X;

(iii) Average hourly NO_X emission rate (in lb/mmBtu, rounded to the nearest thousandth); and

(iv) Hourly NO_X mass emissions (in lbs, rounded to the nearest tenth).

(8) Formulas from monitoring plan for total NO_X mass.

(b) *Certification, quality assurance and quality control record provisions.* The owner or operator of any affected unit shall record the applicable information in § 75.59 for each affected unit or group of units monitored at a common stack and each non-affected unit under § 75.72(b)(2)(ii).

(c) *Monitoring plan recordkeeping provisions*—(1) *General provisions.* The owner or operator of an affected unit shall prepare and maintain a monitoring plan for each affected unit or group of units monitored at a common stack and each non-affected unit under § 75.72(b)(2)(ii). Except as provided in paragraph (d) or (f) of this section, a monitoring plan shall contain sufficient information on the continuous emission monitoring systems, excepted methodology under § 75.19, or excepted monitoring systems under appendix D or E to this part and the use of data derived from these systems to demonstrate that all the unit's No_X emissions are monitored and reported.

(2) Whenever the owner or operator makes a replacement, modification, or change in the certified continuous emission monitoring system, excepted methodology under § 75.19, excepted monitoring system under appendix D or E to this part, or alternative monitoring system under subpart E of this part, including a change in the automated data acquisition and handling system or in the flue gas handling system, that affects information reported in the monitoring plan (e.g., a change to a serial number for a component of a monitoring system), then the owner or operator shall update the monitoring plan.

(3) *Contents of the monitoring plan for units not subject to an Acid Rain emissions limitation.* Prior to January 1, 2009, each monitoring plan shall contain the information in § 75.53(e)(1) or § 75.53(g)(1) in electronic format and the information in § 75.53(e)(2) or § 75.53(g)(2) in hardcopy format. On and after January 1, 2009, each monitoring plan shall contain the information in § 75.53(g)(1) in electronic format and the information in § 75.53(g)(2) in hardcopy format, only. In addition, to the extent applicable, prior to January 1, 2009, each monitoring plan shall contain the information in § 75.53(f)(1)(i), (f)(2)(i), and (f)(4) or § 75.53(h)(1)(i), and (h)(2)(i) in electronic format and the information in § 75.53(f)(1)(ii) and (f)(2)(ii) or § 75.53(h)(1)(ii) and (h)(2)(ii) in hardcopy format. On and after January 1, 2009, each monitoring plan shall contain the information in § 75.53(h)(1)(i), and (h)(2)(i) in electronic format and the information in § 75.53(h)(1)(ii) and (h)(2)(ii) in hardcopy format, only. For units using the low mass emissions excepted methodology under § 75.19, prior to January 1, 2009, the monitoring plan shall include the additional information in § 75.53(f)(5)(i) and (f)(5)(ii) or § 75.53(h)(4)(i) and (h)(4)(ii). On and after January 1, 2009, for units using the low mass emissions excepted methodology under § 75.19 the monitoring plan shall include the additional information in § 75.53(h)(4)(i) and (h)(4)(ii), only. Prior to January 1, 2008, the monitoring plan shall also identify, in electronic format, the reporting schedule for the affected unit (ozone season or quarterly), and the beginning and end dates for the reporting schedule. The monitoring plan also shall include a seasonal controls indicator, and an ozone season fuel-switching flag.

(d) *General reporting provisions.* (1) The designated representative for an affected unit shall comply with all reporting requirements in this section and with any additional requirements set forth in an applicable State or federal NO_X mass emission reduction program that adopts the requirements of this subpart.

(2) The designated representative for an affected unit shall submit the following for each affected unit or group of units monitored at a common stack and each non-affected unit under § 75.72(b)(2)(ii):

(i) Initial certification and recertification applications in accordance with § 75.70(d);

(ii) Monitoring plans in accordance with paragraph (e) of this section; and

(iii) Quarterly reports in accordance with paragraph (f) of this section.

(3) *Other petitions and communications.* The designated representative for an affected unit shall submit petitions, correspondence, application forms, and petition-related test results in accordance with the provisions in § 75.70(h).

(4) *Quality assurance RATA reports.* If requested by the permitting authority, the designated representative of an affected unit shall submit the quality assurance RATA report for each affected unit or group of units monitored at a common stack and each non-affected unit under § 75.72(b)(2)(ii) by the later of 45 days after completing a quality assurance RATA according to section 2.3 of appendix B to this part or 15 days of receiving the request. The designated representative shall report the hardcopy information required by § 75.59(a)(9) to the permitting authority.

(5) *Notifications.* The designated representative for an affected unit shall submit written notice to the permitting authority according to the provisions in § 75.61 for each affected unit or group of units monitored at a common stack and each non-affected unit under § 75.72(b)(2)(ii).

(6) *Routine appendix E retest reports.* If requested by the applicable EPA Regional Office, appropriate State, and/or appropriate local air pollution control agency, the designated representative shall submit a hardcopy report within 45 days after completing a required periodic retest according to section 2.2 of appendix E to this part, or within 15 days of receiving the request, whichever is later. The designated representative shall report the hardcopy information required by § 75.59(b)(5) to the applicable EPA Regional Office, appropriate State, and/or appropriate local air pollution control agency that requested the hardcopy report.

(e) *Monitoring plan reporting*—(1) *Electronic submission.* The designated representative for an affected unit shall submit to the Administrator a complete, electronic, up-to-date monitoring plan file for each affected unit or group of units monitored at a common stack and each non-affected unit under § 75.72(b)(2)(ii), no later than 21 days prior to the initial certification test; at the time of a certification or recertification application submission; and whenever an update of the electronic monitoring plan is required, either under § 75.53 or elsewhere in this part.

(2) *Hardcopy submission.* The designated representative of an affected unit shall submit all of the hardcopy information required under § 75.53, for each affected unit or group of units monitored at a common stack and each non-affected unit under § 75.72(b)(2)(ii), to the permitting authority prior to initial certification. Thereafter, the designated representative shall submit hardcopy information only if that portion of the monitoring plan is revised. The designated representative shall submit the required hardcopy information as follows: no later than 21 days prior to the initial certification test; with any certification or recertification application, if a hardcopy monitoring plan change is associated with the recertification event; and within 30 days of any other event with which a hardcopy monitoring plan change is associated, pursuant to § 75.53(b). Electronic submittal of all monitoring plan information, including hardcopy portions, is permissible provided that a paper copy of the hardcopy portions can be furnished upon request.

(f) *Quarterly reports*—(1) *Electronic submission.* The designated representative for an affected unit shall electronically report the data and information in this paragraph (f)(1) and in

paragraphs (f)(2) and (3) of this section to the Administrator quarterly, unless the unit has been placed in long-term cold storage (as defined in § 72.2 of this chapter). For units placed into long-term cold storage during a reporting quarter, the exemption from submitting quarterly reports begins with the calendar quarter following the date that the unit is placed into long-term cold storage. In such cases, the owner or operator shall submit quarterly reports for the unit beginning with the data from the quarter in which the unit recommences operation (where the initial quarterly report contains hourly data beginning with the first hour of recommenced operation of the unit). Each electronic report must be submitted to the Administrator within 30 days following the end of each calendar quarter. Except as otherwise provided in § 75.64(a)(4) and (a)(5), each electronic report shall include the information provided in paragraphs (f)(1)(i) through (1)(vi) of this section, and shall also include the date of report generation. Prior to January 1, 2009, each report shall include the facility information provided in paragraphs (f)(1)(i)(A) and (B) of this section, for each affected unit or group of units monitored at a common stack. On and after January 1, 2009, only the facility identification information provided in paragraph (f)(1)(i)(A) of this section is required.

(i) Facility information:

(A) Identification, including:

(*1*) Facility/ORISPL number;

(*2*) Calendar quarter and year data contained in the report; and

(*3*) Electronic data reporting format version used for the report.

(B) Location of facility, including:

(*1*) Plant name and facility identification code;

(*2*) EPA AIRS facility system identification code;

(*3*) State facility identification code;

(*4*) Source category/type;

(*5*) Primary SIC code;

(*6*) State postal abbreviation;

(*7*) FIPS county code; and

(*8*) Latitude and longitude.

(ii) The information and hourly data required in paragraphs (a) and (b) of this section, except for:

(A) Descriptions of adjustments, corrective action, and maintenance;

(B) Information which is incompatible with electronic reporting (e.g., field data sheets, lab analyses, quality control plan);

(C) For units with NO_X add-on emission controls that do not elect to use the approved site-specific parametric monitoring procedures for calculation of substitute data, the information in § 75.58(b)(3);

(D) Information required by § 75.57(h) concerning the causes of any missing data periods and the actions taken to cure such causes;

(E) Hardcopy monitoring plan information required by § 75.53 and hardcopy test data and results required by § 75.59;

(F) Records of flow polynomial equations and numerical values required by § 75.59(a)(5)(vi);

(G) Daily fuel sampling information required by § 75.58(c)(3)(i) for units using assumed values under appendix D;

(H) Information required by § 75.59(b)(2) concerning transmitter or transducer accuracy tests;

(I) Stratification test results required as part of the RATA supplementary records under § 75.59(a)(7);

(J) Data and results of RATAs that are aborted or invalidated due to problems with the reference method or operational problems with the unit and data and results of linearity checks that are aborted or invalidated due to operational problems with the unit; and

(K) Supplementary RATA information required under § 75.59(a)(7), except that:

(*1*) The applicable data elements under § 75.59(a)(7)(ii)(A) through (T) and under § 75.59(a)(7)(iii)(A) through (M) shall be reported for flow RATAs at circular or rectangular stacks (or ducts) in which angular compensation for yaw and/or pitch angles is used (*i.e.*, Method 2F or 2G in appendices A–1 and A–2 to part 60 of this chapter), with or without wall effects adjustments;

(*2*) The applicable data elements under § 75.59(a)(7)(ii)(A) through (T) and under § 75.59(a)(7)(iii)(A) through (M) shall be reported for any flow RATA run at a circular stack in which Method 2 in appendices A–1 and A–2 to part

60 of this chapter is used and a wall effects adjustment factor is determined by direct measurement;

(*3*) The data under § 75.59(a)(7)(ii)(T) shall be reported for all flow RATAs at circular stacks in which Method 2 in appendices A–1 and A–2 to part 60 of this chapter is used and a default wall effects adjustment factor is applied; and

(*4*) The data under § 75.59(a)(7)(ix)(A) through (F) shall be reported for all flow RATAs at rectangular stacks or ducts in which Method 2 in appendices A–1 and A–2 to part 60 of this chapter is used and a wall effects adjustment factor is applied.

(iii) Average NO_X emission rate (lb/mmBtu, rounded to the nearest thousandth) during the quarter and cumulative NO_X emission rate for the calendar year.

(iv) Tons of NO_X emitted during quarter, cumulative tons of NO_X emitted during the year, and, during the second and third calendar quarters, cumulative tons of NO_X emitted during the ozone season.

(v) During the second and third calendar quarters, cumulative heat input for the ozone season.

(vi) Unit or stack or common pipe header operating hours for quarter, cumulative unit, stack or common pipe header operating hours for calendar year, and, during the second and third calendar quarters, cumulative operating hours during the ozone season.

(vii) Reporting period heat input.

(viii) New reporting frequency and begin date of the new reporting frequency (if applicable).

(2) The designated representative shall certify that the component and system identification codes and formulas in the quarterly electronic reports submitted to the Administrator pursuant to paragraph (e) of this section represent current operating conditions.

(3) *Compliance certification*. The designated representative shall submit and sign a compliance certification in support of each quarterly emissions monitoring report based on reasonable inquiry of those persons with primary responsibility for ensuring that all of the unit's emissions are correctly and fully monitored. The certification shall state that:

(i) The monitoring data submitted were recorded in accordance with the applicable requirements of this part, including the quality assurance procedures and specifications; and

(ii) With regard to a unit with add-on emission controls and for all hours where data are substituted in accordance with § 75.34(a)(1), the add-on emission controls were operating within the range of parameters listed in the monitoring plan and the substitute values do not systematically underestimate NO_X emissions.

(4) The designated representative shall comply with all of the quarterly reporting requirements in §§ 75.64(d), (f), and (g).

[64 FR 28624, May 26, 1999, as amended at 67 FR 40446, June 12, 2002; 73 FR 4359, Jan. 24, 2008]

§ 75.74 Annual and ozone season monitoring and reporting requirements.

(a) *Annual monitoring requirement*. (1) The owner or operator of an affected unit subject both to an Acid Rain emission limitation and to a State or federal NO_X mass reduction program that adopts the provisions of this part must meet the requirements of this part during the entire calendar year.

(2) The owner or operator of an affected unit subject to a State or federal NO_X mass reduction program that adopts the provisions of this part and that requires monitoring and reporting of hourly emissions on an annual basis must meet the requirements of this part during the entire calendar year.

(b) *Ozone season monitoring requirements*. The owner or operator of an affected unit that is not required to meet the requirements of this subpart on an annual basis under paragraph (a) of this section may either:

(1) Meet the requirements of this subpart on an annual basis; or

(2) Meet the requirements of this subpart during the ozone season, except as specified in paragraph (c) of this section.

(c) If the owner or operator of an affected unit chooses to meet the requirements of this subpart on less than an annual basis in accordance with paragraph (b)(2) of this section, then:

(1) The owner or operator of a unit that uses continuous emissions monitoring systems or a fuel flowmeter to meet any of the requirements of this subpart shall quality assure the hourly ozone season emission data required by this subpart. To achieve this, the owner or operator shall operate, maintain and calibrate each required CEMS and shall perform diagnostic testing and quality assurance testing of each required CEMS or fuel flowmeter according to the applicable provisions of paragraphs (c)(2) through (c)(5) of this section. Except where otherwise noted, the provisions of paragraphs (c)(2) and (c)(3) of this section apply instead of the quality assurance provisions in sections 2.1 through 2.3 of appendix B to this part, and shall be used in lieu of those appendix B provisions.

(2) *Quality assurance requirements prior to the ozone season.* The provisions of this paragraph apply to each ozone season. The owner or operator shall, at a minimum, perform the following diagnostic testing and quality assurance assessments, and shall maintain the following records, to ensure that the hourly emission data recorded at the beginning of the current ozone season are suitable for reporting as quality-assured data:

(i) For each required gas monitor (*i.e.*, for each NO_X pollutant concentration monitor and each diluent gas (CO_2 or O_2) monitor, including CO_2 and O_2 monitors used exclusively for heat input determination and O_2 monitors used for moisture determination), a linearity check shall be performed and passed in the second calendar quarter no later than April 30.

(A) Conduct each linearity check in accordance with the general procedures in section 6.2 of appendix A to this part, except that the data validation procedures in sections 6.2(a) through (f) of appendix A do not apply.

(B) Each linearity check shall be done ''hands-off,'' as described in section 2.2.3(c) of appendix B to this part.

(C) In the time period extending from the date and hour in which the linearity check is passed through April 30, the owner or operator shall operate and maintain the CEMS and shall perform daily calibration error tests of the CEMS in accordance with section 2.1 of appendix B to this part. When a calibration error test is failed, as described in section 2.1.4 of appendix B to this part, corrective actions shall be taken. The additional calibration error test provisions of section 2.1.3 of appendix B to this part shall be followed.

(D) If the linearity check is not completed by April 30, data validation shall be determined in accordance with paragraph (c)(3)(ii)(E) of this section.

(ii) For each required CEMS (*i.e.*, for each NO_X concentration monitoring system, each NO_X-diluent monitoring system, each flow rate monitoring system, each moisture monitoring system and each diluent gas CEMS used exclusively for heat input determination), a relative accuracy test audit (RATA) shall be performed and passed in the first or second calendar quarter, but no later than April 30.

(A) Conduct each RATA in accordance with the applicable procedures in sections 6.5 through 6.5.10 of appendix A to this part, except that the data validation procedures in sections 6.5(f)(1) through (f)(6) do not apply, and, for flow rate monitoring systems, the required RATA load level(s) (or operating level(s)) shall be as specified in this paragraph.

(B) Each RATA shall be done ''hands-off,'' as described in section 2.3.2 (c) of appendix B to this part. The provisions in section 2.3.1.4 of appendix B to this part, pertaining to the number of allowable RATA attempts, shall apply.

(C) For flow rate monitoring systems installed on peaking units or bypass stacks and for flow monitors exempted from multiple-level RATA testing under section 6.5.2(e) of appendix A to this part, a single-load (or single-level) RATA is required. For all other flow rate monitoring systems, a 2-load (or 2-level) RATA is required at the two most frequently-used load or operating levels (as defined under section 6.5.2.1 of appendix A to this part), with the following exceptions. Except for flow monitors exempted from 3-level RATA testing under section 6.5.2(e) of appendix A to this part, a 3-load flow RATA is required at least once every five years and is also required if the flow monitor polynomial coefficients or K

factor(s) are changed prior to conducting the flow RATA required under this paragraph.

(D) A bias test of each required NO_X concentration monitoring system, each NO_X-diluent monitoring system and each flow rate monitoring system shall be performed in accordance with section 7.6 of appendix A to this part. If the bias test is failed, a bias adjustment factor (BAF) shall be calculated for the monitoring system, as described in section 7.6.5 of appendix A to this part and shall be applied to the subsequent data recorded by the CEMS.

(E) In the time period extending from the hour of completion of the required RATA through April 30, the owner or operator shall operate and maintain the CEMS by performing, at a minimum, the following activities:

(*1*) The owner or operator shall perform daily calibration error tests and (if applicable) daily flow monitor interference checks, according to section 2.1 of appendix B to this part. When a daily calibration error test or interference check is failed, as described in section 2.1.4 of appendix B to this part, corrective actions shall be taken. The additional calibration error test provisions in section 2.1.3 of appendix B to this part shall be followed. Records of the required daily calibration error tests and interference checks shall be kept in a format suitable for inspection on a year-round basis.

(*2*) If the owner or operator makes a replacement, modification, or change in a certified monitoring system that significantly affects the ability of the system to accurately measure or record NO_X mass emissions or heat input or to meet the requirements of § 75.21 or appendix B to this part, the owner or operator shall recertify the monitoring system according to § 75.20(b).

(F) *Data validation*. For each RATA that is performed by April 30, data validation shall be done according to sections 2.3.2(a)–(j) of appendix B to this part. However, if a required RATA is not completed by April 30, data from the monitoring system shall be invalid, beginning with the first unit operating hour on or after May 1. The owner or operator shall continue to invalidate all data from the CEMS until either:

(*1*) The required RATA of the CEMS has been performed and passed; or

(*2*) A probationary calibration error test of the CEMS is passed in accordance with § 75.20(b)(3)(ii). Once the probationary calibration error test has been passed, the owner or operator shall perform the required RATA in accordance with the conditional data validation provisions and within the 720 unit or stack operating hour time frame specified in § 75.20(b)(3) (subject to the restrictions in paragraph (c)(3)(xii) of this section), and the term ''quality assurance'' shall apply instead of the term ''recertification.'' However, in lieu of the provisions in § 75.20(b)(3)(ix), the owner or operator shall follow the applicable provisions in paragraphs (c)(3)(xi) and (c)(3)(xii) of this section.

(3) *Quality assurance requirements within the ozone season*. The provisions of this paragraph apply to each ozone season. The owner or operator shall, at a minimum, perform the following quality assurance testing during the ozone season, i.e. in the time period extending from May 1 through September 30 of each calendar year:

(i) Daily calibration error tests and (if applicable) interference checks of each CEMS required by this subpart shall be performed in accordance with sections 2.1.1 and 2.1.2 of appendix B to this part. The applicable provisions in sections 2.1.3, 2.1.4 and 2.1.5 of appendix B to this part, pertaining, respectively, to additional calibration error tests and calibration adjustments, data validation, and quality assurance of data with respect to daily assessments, shall also apply.

(ii) For each gas monitor required by this subpart, linearity checks shall be performed in the second and third calendar quarters, as follows:

(A) For the second calendar quarter, the pre-ozone season linearity check required under paragraph (c)(2)(i) of this section shall be performed by April 30.

(B) For the third calendar quarter, a linearity check shall be performed and passed no later than July 30.

(C) Conduct each linearity check in accordance with the general procedures in section 6.2 of appendix A to this part, except that the data validation

procedures in sections 6.2(a) through (f) of appendix A do not apply.

(D) Each linearity check shall be done ''hands-off,'' as described in section 2.2.3(c) of appendix B to this part.

(E) *Data Validation*. For second and third quarter linearity checks performed by the applicable deadline (*i.e.*, April 30 or July 30), data validation shall be done in accordance with sections 2.2.3(a), (b), (c), (e), and (h) of Appendix B to this part. However, if a required linearity check for the second calendar quarter is not completed by April 30, or if a required linearity check for the third calendar quarter is not completed by July 30, data from the monitoring system (or range) shall be invalid, beginning with the first unit operating hour on or after May 1 or July 31, respectively. The owner or operator shall continue to invalidate all data from the CEMS until either:

(*1*) The required linearity check of the CEMS has been performed and passed; or

(*2*) A probationary calibration error test of the CEMS is passed in accordance with § 75.20(b)(3)(ii). Once the probationary calibration error test has been passed, the owner or operator shall perform the required linearity check in accordance with the conditional data validation provisions and within the 168 unit or stack operating hour time frame specified in § 75.20(b)(3) (subject to the restrictions in paragraph (c)(3)(xii) of this section), and the term ''quality assurance'' shall apply instead of the term ''recertification.'' However, in lieu of the provisions in § 75.20(b)(3)(ix), the owner or operator shall follow the applicable provisions in paragraphs (c)(3)(xi) and (c)(3)(xii) of this section.

(F) A pre-season linearity check performed and passed in April satisfies the linearity check requirement for the second quarter.

(G) The third quarter linearity check requirement in paragraph (c)(3)(ii)(B) of this section is waived if:

(*1*) Due to infrequent unit operation, the 168 operating hour conditional data validation period associated with a pre-season linearity check extends into the third quarter; and

(*2*) A linearity check is performed and passed within that conditional data validation period.

(iii) For each flow monitoring system required by this subpart, except for flow monitors installed on non-load-based units that do not produce electrical or thermal output, flow-to-load ratio tests are required in the second and third calendar quarters, in accordance with section 2.2.5 of appendix B to this part. If the flow-to-load ratio test for the second calendar quarter is failed, the owner or operator shall follow the procedures in section 2.2.5(c)(8) of appendix B to this part. If the flow-to-load ratio test for the third calendar quarter is failed, data from the flow monitor shall be considered invalid at the beginning of the next ozone season unless, prior to May 1 of the next calendar year, the owner or operator has either successfully implemented Option 1 in section 2.2.5.1 of appendix B to this part or Option 2 in section 2.2.5.2 of appendix B to this part, or unless a flow RATA has been performed and passed in accordance with paragraph (c)(2)(ii) of this section.

(iv) For each differential pressure-type flow monitor used to meet the requirements of this subpart, quarterly leak checks are required in the second and third calendar quarters, in accordance with section 2.2.2 of appendix B to this part. For the second calendar quarter of the year, only the unit or stack operating hours in the months of May and June shall be used to determine whether the second calendar quarter is a QA operating quarter (as defined in § 72.2 of this chapter). Data validation for quarterly flow monitor leak checks shall be done in accordance with section 2.2.3(g) of appendix B to this part. If the leak check for the third calendar quarter is failed and a subsequent leak check is not passed by the end of the ozone season, then data from the flow monitor shall be considered invalid at the beginning of the next ozone season unless a leak check is passed prior to May 1 of the next calendar year.

(v) A fuel flow-to-load ratio test in section 2.1.7 of appendix D to this part shall be performed in the second and third calendar quarters if, for a unit using a fuel flowmeter to determine

heat input under this subpart, the owner or operator has elected to use the fuel flow-to-load ratio test to extend the deadline for the next fuel flowmeter accuracy test. Automatic deadline extensions may be claimed for the two calendar quarters outside the ozone season (the first and fourth calendar quarters), since a fuel flow-to-load ratio test is not required in those quarters. If a fuel flow-to-load ratio test is failed, follow the applicable procedures and data validation provisions in section 2.1.7.4 of appendix D to this part. If the fuel flow-to-load ratio test for the third calendar quarter is failed, data from the fuel flowmeter shall be considered invalid at the beginning of the next ozone season unless the requirements of section 2.1.7.4 of appendix D to this part have been fully met prior to May 1 of the next calendar year.

(vi)–(viii)

(ix) If, for any required CEMS, diagnostic linearity checks or RATAs other than those required by this section are performed during the ozone season, use the applicable data validation procedures in section 2.2.3 (for linearity checks) or 2.3.2 (for RATAs) of appendix B to this part.

(x) If any required CEMS is recertified within the ozone season, use the data validation provisions in §75.20(b)(3) and, if applicable, paragraphs (c)(3)(xi) and (c)(3)(xii) of this section.

(xi) If, at the end of the second quarter of any calendar year, a required quality assurance, diagnostic, or recertification test of a monitoring system has not been completed, and if data contained in the quarterly report are conditionally valid pending the results of test(s) to be completed in a subsequent quarter, the owner or operator shall indicate this by means of a suitable conditionally valid data flag in the electronic quarterly report for the second calendar quarter. The owner or operator shall resubmit the report for the second quarter if the required quality assurance, diagnostic, or recertification test is subsequently failed. In the resubmitted report, the owner or operator shall use the appropriate missing data routine in §§75.31 through §75.37 to replace with substitute data each hour of conditionally valid data that was invalidated by the failed quality assurance, diagnostic, or recertification test. Alternatively, if any required quality assurance, diagnostic, or recertification test is not completed by the end of the second calendar quarter but is completed no later than 30 days after the end of that quarter (*i.e.*, prior to the deadline for submitting the quarterly report under §75.73), the test data and results may be submitted with the second quarter report even though the test date(s) are from the third calendar quarter. In such instances, if the quality assurance, diagnostic, or recertification test(s) are passed in accordance with the conditional data validation provisions of §75.20(b)(3), conditionally valid data may be reported as quality-assured, in lieu of reporting a conditional data flag. If the tests are failed and if conditionally valid data are replaced, as appropriate, with substitute data, then neither the reporting of a conditional data flag nor resubmission is required.

(xii) If, at the end of the third quarter of any calendar year, a required quality assurance, diagnostic or recertification test of a monitoring system has not been completed, and if data contained in the quarterly report are conditionally valid pending the results of test(s) to be completed, the owner or operator shall do one of the following:

(A) If the results of the required tests are not available within 30 days of the end of the third calendar quarter and cannot be submitted with the quarterly report for the third calendar quarter, then the test results are considered to be missing and the owner or operator shall use the appropriate missing data routine in §§75.31 through §75.37 to replace with substitute data each hour of conditionally valid data in the third quarter report. In addition, if the data in the second quarterly report were flagged as conditionally valid at the end of the quarter, pending the results of the same missing tests, the owner or operator shall resubmit the report for the second quarter and shall use the appropriate missing data routine in §§75.31 through §75.37 to replace with substitute data each hour of conditionally valid data associated with the

missing quality assurance, diagnostic, or recertification tests; or

(B) If the required quality assurance, diagnostic, or recertification tests are completed no later than 30 days after the end of the third calendar quarter, the test data and results may be submitted with the third quarter report even though the test date(s) are from the fourth calendar quarter. In this instance, if the required tests are passed in accordance with the conditional data validation provisions of § 75.20(b)(3), all conditionally valid data associated with the tests shall be reported as quality-assured. If the tests are failed, the owner or operator shall use the appropriate missing data routine in §§ 75.31 through § 75.37 to replace with substitute data each hour of conditionally valid data associated with the failed test(s). In addition, if the data in the second quarterly report were flagged as conditionally valid at the end of the quarter, pending the results of the same failed test(s), the owner or operator shall resubmit the report for the second quarter and shall use the appropriate missing data routine in §§ 75.31 through § 75.37 to replace with substitute data each hour of conditionally valid data associated with the failed test(s).

(4) The owner or operator of a unit using the procedures in appendix D of this part to determine heat input rate is required to maintain fuel flowmeters only during the ozone season, except that for purposes of determining the deadline for the next periodic quality assurance test on the fuel flowmeter, the owner or operator shall include all fuel flowmeter QA operating quarters (as defined in § 72.2) for the entire calendar year, not just fuel flowmeter QA operating quarters in the ozone season. For each calendar year, the owner or operator shall record, for each fuel flowmeter, the number of fuel flowmeter QA operating quarters. The owner or operator shall include all calendar quarters in the year when determining the deadline for visual inspection of the primary fuel flowmeter element, as specified in section 2.1.6(c) of appendix D to this part.

(5) The owner or operator of a unit using the procedures in appendix D of this part to determine heat input rate is only required to sample fuel for the purposes of determining density and GCV during the ozone season, except that:

(i) The owner or operator of a unit that performs sampling from the fuel storage tank upon delivery must sample the tank between the date and hour of the most recent delivery before the first date and hour that the unit operates in the ozone season and the first date and hour that the unit operates in the ozone season.

(ii) The owner or operator of a unit that performs sampling upon delivery from the delivery vehicle must ensure that all shipments received during the calendar year are sampled.

(iii) The owner or operator of a unit that performs sampling on each day the unit combusts fuel or that performs fuel sampling continuously must sample the fuel starting on the first day the unit operates during the ozone season. The owner or operator then shall use that sampled value for all hours of combustion during the first day of unit operation, continuing until the date and hour of the next sample.

(6) The owner or operator shall, in accordance with § 75.73, record and report the hourly data required by this subpart and shall record and report the results of all required quality assurance tests, as follows:

(i) All hourly emission data for the period of time from May 1 through September 30 of each calendar year shall be recorded and reported. For missing data purposes, only the data recorded in the time period from May 1 through September 30 shall be considered quality-assured;

(ii) The results of all daily calibration error tests and flow monitor interference checks performed in the time period from May 1 through September 30 shall be recorded and reported;

(iii) For the time periods described in paragraphs (c)(2)(i)(C) and (c)(2)(ii)(E) of this section, hourly emission data and the results of all daily calibration error tests and flow monitor interference checks shall be recorded. The owner or operator may opt to report unit operating data, daily calibration error test and flow monitor interference check results, and hourly emission data in the time period from April

1 through April 30. However, only the data recorded in the time period from May 1 through September 30 shall be used for NO_X mass compliance determination;

(iv) The results of all required quality assurance tests (RATAs, linearity checks, flow-to-load ratio tests and leak checks) performed during the ozone season shall be reported in the appropriate ozone season quarterly report; and

(v) The results of RATAs (and any other quality assurance test(s) required under paragraph (c)(2) or (c)(3) of this section) which affect data validation for the current ozone season, but which were performed outside the ozone season (*i.e.*, between January 1 and April 30 of the current calendar year), shall be reported in the quarterly report for the second quarter of the current calendar year (or in the report for the third calendar quarter of the current calendar year, if the unit or stack does not operate in the second quarter).

(7) The owner or operator shall use only quality-assured data from within ozone seasons in the substitute data procedures under subpart D of this part and section 2.4.2 of appendix D to this part.

(i) The lookback periods (e.g., 2160 quality-assured monitor operating hours for a NO_X-diluent continuous emission monitoring system, a NO_X concentration monitoring system, or a flow monitoring system) used to calculate missing data must include only quality-assured data from periods within ozone seasons.

(ii) The applicable missing data procedures of §§ 75.31 through 75.37 shall be used, with one exception. When a fuel which has a significantly higher NO_X emission rate than any of the fuel(s) combusted in prior ozone seasons is combusted in the unit, and no quality-assured NO_X data have been recorded in the current, or any previous, ozone season while combusting the new fuel, the owner or operator shall substitute the maximum potential NO_X emission rate, as defined in § 72.2 of this chapter, from a NO_X-diluent continuous emission monitoring system, or the maximum potential concentration of NO_X, as defined in section 2.1.2.1 of appendix A to this part, from a NO_X concentration monitoring system. The maximum potential value used shall be specific to the new fuel. The owner or operator shall substitute the maximum potential value for each hour of missing NO_X data until the first hour that quality-assured NO_X data are obtained while combusting the new fuel, and then shall resume use of the missing data routines in §§ 75.31 through 75.37; and

(iii) In order to apply the missing data routines described in §§ 75.31 through 75.37 on an ozone season-only basis, the procedures in those sections shall be modified as follows:

(A) The use of the initial missing data procedures in § 75.31 shall commence with the first unit operating hour in the first ozone season for which emissions data are required to be reported under § 75.64.

(B) In § 75.31(a), the phrases ''During the first 720 quality-assured monitor operating hours within the ozone season'' and ''during the first 2,160 quality-assured monitor operating hours within the ozone season'' apply respectively instead of the phrases ''During the first 720 quality-assured monitor operating hours'' and ''during the first 2,160 quality-assured monitor operating hours''.

(C) In § 75.32(a), the phrases ''the first 720 quality-assured monitor operating hours within the ozone season'' and ''the first 2,160 quality-assured monitor operating hours within the ozone season'' apply, respectively, instead of the phrases ''the first 720 quality-assured monitor operating hours'' and ''the first 2,160 quality-assured monitor operating hours''.

(D) In § 75.32(a)(1), the phrase ''Following initial certification, prior to completion of 3,672 unit (or stack) operating hours within the ozone season'' applies instead of the phrase ''Prior to completion of 8,760 unit (or stack) operating hours following initial certification''.

(E) In Equation 8, the phrase ''Total unit operating hours within the ozone season'' applies instead of the phrase ''Total unit operating hours''.

(F) In § 75.32(a)(2), the phrase ''3,672 unit (or stack) operating hours within the ozone season'' applies instead of the phrase ''8,760 unit (or stack) operating hours''.

(G) In the numerator of Equation 9, the phrase ''Total unit operating hours within the ozone season'' applies instead of the phrase ''Total unit operating hours'', and the phrase ''3,672 unit operating hours within the ozone season'' applies instead of the phrase ''8,760 unit operating hours''. In the denominator of Equation 9, the number ''3,672'' applies instead of ''8,760''.

(H) Use the following instead of the first three sentences in § 75.32(a)(3): ''When calculating percent monitor data availability using Equation 8 or 9, the owner or operator shall include all unit or stack operating hours within the ozone season, and all monitor operating hours within the ozone season for which quality-assured data were recorded by a certified primary monitor; a certified redundant or non-redundant backup monitor or a reference method for that unit; or by an approved alternative monitoring system under subpart E of this part. No hours from more than three years (26,280 clock hours) earlier shall be used in Equation 9. For a unit that has accumulated fewer than 3,672 ozone season operating hours in the previous three years, use the following: in the numerator of Equation 9 use 'Total unit operating hours within the ozone season for which quality-assured data were recorded in the previous three years'; and in the denominator of Equation 9 use 'Total unit operating hours within the ozone season, in the previous three years' ''

(I) In § 75.33(a), the phrases ''the first 720 quality-assured monitor operating hours within the ozone season'' and ''the first 2,160 quality-assured monitor operating hours within the ozone season'' apply, respectively, instead of the phrases ''the first 720 quality-assured monitor operating hours'' and ''the first 2,160 quality-assured monitor operating hours''.

(J) Instead of the last sentence of § 75.33(a), use ''For the purposes of missing data substitution, the owner or operator of a unit shall use only quality-assured monitor operating hours of data that were recorded within the ozone season and no more than three years (26,280 clock hours) prior to the date and time of the missing data period.''

(K) In §§ 75.33(b), 75.33(c), 75.35, 75.36, and 75.37, the phrases ''720 quality-assured monitor operating hours within the ozone season'' and ''2,160 quality-assured monitor operating hours within the ozone season'' apply, respectively, instead of the phrases ''720 quality-assured monitor operating hours'' and ''2,160 quality-assured monitor operating hours''.

(L) In § 75.34(a)(3) and (a)(5), the phrases ''720 quality-assured monitor operating hours within the ozone season'' and ''2160 quality-assured monitor operating hours within the ozone season'' apply instead of ''720 quality-assured monitor operating hours'' and ''2160 quality-assured monitor operating hours'', respectively.

(8) The owner or operator of a unit with NO_X add-on emission controls or a unit capable of combusting more than one fuel shall keep records during ozone season in a form suitable for inspection to demonstrate that the typical NO_X emission rate or NO_X concentration during the prior ozone season(s) included in the missing data lookback period is representative of the ozone season in which missing data are substituted and that use of the missing data procedures will not systematically underestimate NO_X mass emissions. These records shall include:

(i) For units that can combust more than one fuel, the fuel or fuels combusted each hour; and

(ii) For units with add-on emission controls, using the missing data options in §§ 75.34(a)(1) through 75.34(a)(5), the range of operating parameters for add-on emission controls (as defined in the quality assurance/quality control program for the unit required by section 1 in appendix B to this part) and information for verifying proper operation of the add-on emission controls during missing data periods, as described in § 75.34(d).

(9) The designated representative shall certify with each quarterly report that NO_X emission rate values or NO_X concentration values substituted for missing data under subpart D of this part are calculated using only values from an ozone season, that substitute values measured during the prior ozone season(s) included in the missing data lookback period are representative of

the ozone season in which missing data are substituted, and that NO_X emissions are not systematically underestimated.

(10) Units may qualify to use the low mass emissions excepted monitoring methodology in § 75.19 on an ozone season basis. In order to be allowed to use this methodology, a unit may not emit more than 50 tons of NO_X per ozone season, as provided in § 75.19(a)(1)(i)(A)(*3*). If any low mass emissions unit fails to provide a demonstration that its ozone season NO_X mass emissions are less than or equal to 50 tons, then the unit is disqualified from using the methodology. The owner or operator must install and certify any equipment needed to ensure that the unit is monitored using an acceptable methodology by December 31 of the following year.

(11) Units may qualify to use the optional NO_X mass emissions estimation protocol for gas-fired and oil-fired peaking units in appendix E to this part on an ozone season basis. In order to be allowed to use this methodology, the unit must meet the definition of ''peaking unit'' in § 72.2 of this chapter, except that the words ''year'', ''calendar year'' and ''calendar years'' in that definition shall be replaced by the words ''ozone season'', ''ozone season'', and ''ozone seasons'', respectively. In addition, in the definition of the term ''capacity factor'' in § 72.2 of this chapter, the word ''annual'' shall be replaced by the words ''ozone season'' and the number ''8,760'' shall be replaced by the number ''3,672''.

[63 FR 57507, Oct. 27, 1998, as amended at 64 FR 28627, May 26, 1999; 67 FR 40446, 40447, June 12, 2002; 67 FR 57274, Sept. 9, 2002; 73 FR 4360, Jan. 24, 2008]

§ 75.75 Additional ozone season calculation procedures for special circumstances.

(a) The owner or operator of a unit that is required to calculate ozone season heat input for purposes of providing data needed for determining allocations, shall do so by summing the unit's hourly heat input determined according to the procedures in this part for all hours in which the unit operated during the ozone season.

(b) The owner or operator of a unit that is required to determine ozone season NO_X emission rate (in lbs/mmBtu) shall do so by dividing ozone season NO_X mass emissions(in lbs) determined in accordance with this subpart, by heat input determined in accordance with paragraph (a) of this section.

Subpart I—Hg Mass Emission Provisions

SOURCE: 70 FR 28684, May 18, 2005, unless otherwise noted.

§ 75.80 General provisions.

(a) *Applicability*. The owner or operator of a unit shall comply with the requirements of this subpart to the extent that compliance is required by an applicable State or Federal Hg mass emission reduction program that incorporates by reference, or otherwise adopts the provisions of, this subpart.

(1) For purposes of this subpart, the term ''affected unit'' shall mean any coal-fired unit (as defined in § 72.2 of this chapter) that is subject to a State or Federal Hg mass emission reduction program requiring compliance with this subpart. The term ''non-affected unit'' shall mean any unit that is not subject to such a program, the term ''permitting authority'' shall mean the permitting authority under an applicable State or Federal Hg mass emission reduction program that adopts the requirements of this subpart, and the term ''designated representative'' shall mean the responsible party under the applicable State or Federal Hg mass emission reduction program that adopts the requirements of this subpart.

(2) In addition, the provisions of subparts A, C, D, E, F, and G and appendices A through G of this part applicable to Hg concentration, flow rate, moisture, diluent gas concentration, and heat input, as set forth and referenced in this subpart, shall apply to the owner or operator of a unit required to meet the requirements of this subpart by a State or Federal Hg mass emission reduction program. The requirements of this part for SO_2, NO_X, CO_2 and opacity monitoring, recordkeeping and reporting do not apply to units that are subject only to a State or Federal Hg mass emission reduction

program that adopts the requirements of this subpart, but are not affected units under the Acid Rain Program or under a State or Federal NO_X mass emission reduction program that adopts the requirements of subpart H of this part.

(b) *Compliance dates.* The owner or operator of an affected unit shall meet the compliance deadlines established by an applicable State or Federal Hg mass emission reduction program that adopts the requirements of this subpart.

(c) *Prohibitions.* (1) No owner or operator of an affected unit or a non-affected unit under § 75.82(b)(2)(ii) shall use any alternative monitoring system, alternative reference method, or any other alternative for the required continuous emission monitoring system without having obtained prior written approval in accordance with paragraph (h) of this section.

(2) No owner or operator of an affected unit or a non-affected unit under § 75.82(b)(2)(ii) shall operate the unit so as to discharge, or allow to be discharged emissions of Hg to the atmosphere without accounting for all such emissions in accordance with the applicable provisions of this part.

(3) No owner or operator of an affected unit or a non-affected unit under § 75.82(b)(2)(ii) shall disrupt the continuous emission monitoring system, any portion thereof, or any other approved emission monitoring method, and thereby avoid monitoring and recording Hg mass emissions discharged into the atmosphere, except for periods of recertification or periods when calibration, quality assurance testing, or maintenance is performed in accordance with the provisions of this part applicable to monitoring systems under § 75.81.

(4) No owner or operator of an affected unit or a non-affected unit under § 75.82(b)(2)(ii) shall retire or permanently discontinue use of the continuous emission monitoring system, any component thereof, or any other approved emission monitoring system under this part, except under any one of the following circumstances:

(i) During the period that the unit is covered by a retired unit exemption that is in effect under the State or Federal Hg mass emission reduction program that adopts the requirements of this subpart; or

(ii) The owner or operator is monitoring Hg mass emissions from the affected unit with another certified monitoring system approved, in accordance with the provisions of paragraph (d) of this section; or

(iii) The designated representative submits notification of the date of certification testing of a replacement monitoring system in accordance with § 75.61.

(d) *Initial certification and recertification procedures.* (1) The owner or operator of an affected unit that is subject to the Acid Rain Program or to a State or Federal NO_X mass emission reduction program that adopts the requirements of subpart H of this part shall comply with the applicable initial certification and recertification procedures in § 75.20 and § 75.70(d), except that the owner or operator shall meet any additional requirements for Hg concentration monitoring systems, sorbent trap monitoring systems (as defined in § 72.2 of this chapter), flow monitors, CO_2 monitors, O_2 monitors, or moisture monitors, as set forth under § 75.81, under the common stack provisions in § 75.82, or under an applicable State or Federal Hg mass emission reduction program that adopts the requirements of this subpart.

(2) The owner or operator of an affected unit that is not subject to the Acid Rain Program or to a State or Federal NO_X mass emission reduction program that adopts the requirements of subpart H of this part shall comply with the initial certification and recertification procedures established by an applicable State or Federal Hg mass emission reduction program that adopts the requirements of this subpart.

(e) *Quality assurance and quality control requirements.* For units that use continuous emission monitoring systems to account for Hg mass emissions, the owner or operator shall meet the applicable quality assurance and quality control requirements in § 75.21 and appendix B to this part for the flow monitoring systems, Hg concentration monitoring systems, moisture monitoring systems, and diluent monitors

required under § 75.81. Units using sorbent trap monitoring systems shall meet the applicable quality assurance requirements in § 75.15, appendix K to this part, and sections 1.5 and 2.3 of appendix B to this part.

(f) *Missing data procedures.* Except as provided in § 75.38(b) and paragraph (g) of this section, the owner or operator shall provide substitute data from monitoring systems required under § 75.81 for each affected unit as follows:

(1) For an owner or operator using an Hg concentration monitoring system, substitute for missing data in accordance with the applicable missing data procedures in §§ 75.31 through 75.38 whenever the unit combusts fuel and:

(i) A valid, quality-assured hour of Hg concentration data (in μgm/scm) has not been measured and recorded, either by a certified Hg concentration monitoring system, by an appropriate EPA reference method under § 75.22, or by an approved alternative monitoring method under subpart E of this part; or

(ii) A valid, quality-assured hour of flow rate data (in scfh) has not been measured and recorded for a unit either by a certified flow monitor, by an appropriate EPA reference method under § 75.22, or by an approved alternative monitoring system under subpart E of this part; or

(iii) A valid, quality-assured hour of moisture data (in percent H_2O) has not been measured or recorded for an affected unit, either by a certified moisture monitoring system, by an appropriate EPA reference method under § 75.22, or an approved alternative monitoring method under subpart E of this part. This requirement does not apply when a default percent moisture value, as provided in § 75.11(b), is used to account for the hourly moisture content of the stack gas, or when correction of the Hg concentration for moisture is not necessary; or

(iv) A valid, quality-assured hour of heat input rate data (in MMBtu/hr) has not been measured and recorded for a unit, either by certified flow rate and diluent (CO_2 or O_2) monitors, by appropriate EPA reference methods under § 75.22, or by approved alternative monitoring systems under subpart E of this part, where heat input is required for allocating allowances under the applicable State or Federal Hg mass emission reduction program that adopts the requirements of this subpart.

(2) For an owner or operator using a sorbent trap monitoring system to quantify Hg mass emissions, substitute for missing data in accordance with the missing data procedures in § 75.39.

(g) *Reporting data prior to initial certification.* If, by the applicable compliance date under the State or Federal Hg mass emission reduction program that adopts the requirements of this subpart, the owner or operator of an affected unit has not successfully completed all required certification tests for any monitoring system(s), he or she shall determine, record and report hourly data prior to initial certification using one of the following procedures, for the monitoring system(s) that are uncertified:

(1) For Hg concentration and flow monitoring systems, report the maximum potential concentration of Hg as defined in section 2.1.7 of appendix A to this part and the maximum potential flow rate, as defined in section 2.1.4.1 of appendix A to this part; or

(2) For any unit, report data from the reference methods under § 75.22; or

(3) For any unit that is required to report heat input for purposes of allocating allowances, report (as applicable) the maximum potential flow rate, as defined in section 2.1.4.1 of appendix A to this part, the maximum potential CO_2 concentration, as defined in section 2.1.3.1 of appendix A to this part, the minimum potential O_2 concentration, as defined in section 2.1.3.2 of appendix A to this part, and the minimum potential percent moisture, as defined in section 2.1.5 of appendix A to this part.

(h) *Petitions.* (1) The designated representative of an affected unit that is also subject to the Acid Rain Program may submit a petition to the Administrator requesting an alternative to any requirement of this subpart. Such a petition shall meet the requirements of § 75.66 and any additional requirements established by the applicable State or Federal Hg mass emission reduction program that adopts the requirements of this subpart. Use of an alternative to any requirement of this subpart is in accordance with this subpart and with

such State or Federal Hg mass emission reduction program only to the extent that the petition is approved in writing by the Administrator, in consultation with the permitting authority.

(2) Notwithstanding paragraph (h)(1) of this section, petitions requesting an alternative to a requirement concerning any additional CEMS required solely to meet the common stack provisions of § 75.82 shall be submitted to the permitting authority and the Administrator and shall be governed by paragraph (h)(3) of this section. Such a petition shall meet the requirements of § 75.66 and any additional requirements established by an applicable State or Federal Hg mass emission reduction program that adopts the requirements of this subpart.

(3) The designated representative of an affected unit that is not subject to the Acid Rain Program may submit a petition to the permitting authority and the Administrator requesting an alternative to any requirement of this subpart. Such a petition shall meet the requirements of § 75.66 and any additional requirements established by the applicable State or Federal Hg mass emission reduction program that adopts the requirements of this subpart. Use of an alternative to any requirement of this subpart is in accordance with this subpart only to the extent that it is approved in writing by the Administrator, in consultation with the permitting authority.

[70 FR 28684, May 18, 2005, as amended at; 73 FR 4360, Jan. 24, 2008]

§ 75.81 Monitoring of Hg mass emissions and heat input at the unit level.

The owner or operator of the affected coal-fired unit shall either:

(a) Meet the general operating requirements in § 75.10 for the following continuous emission monitors (except as provided in accordance with subpart E of this part):

(1) A Hg concentration monitoring system (as defined in § 72.2 of this chapter) or a sorbent trap monitoring system (as defined in § 72.2 of this chapter), to measure the mass concentration of total vapor phase Hg in the flue gas, including the elemental and oxidized forms of Hg, in micrograms per standard cubic meter (μg/scm); and

(2) A flow monitoring system; and

(3) A continuous moisture monitoring system (if correction of Hg concentration for moisture is required), as described in § 75.11(b). Alternatively, the owner or operator may use the appropriate fuel-specific default moisture value provided in § 75.11, or a site-specific moisture value approved by petition under § 75.66; and

(4) If heat input is required to be reported under the applicable State or Federal Hg mass emission reduction program that adopts the requirements of this subpart, the owner or operator must meet the general operating requirements for a flow monitoring system and an O_2 or CO_2 monitoring system to measure heat input rate.

(b) For an affected unit that emits 464 ounces (29 lb) of Hg per year or less, use the following excepted monitoring methodology. To implement this methodology for a qualifying unit, the owner or operator shall meet the general operating requirements in § 75.10 for the continuous emission monitors described in paragraphs (a)(2) and (a)(4) of this section, and perform Hg emission testing for initial certification and on-going quality-assurance, as described in paragraphs (c) through (e) of this section.

(c) To determine whether an affected unit is eligible to use the monitoring provisions in paragraph (b) of this section:

(1) The owner or operator must perform Hg emission testing one year or less before the compliance date in § 75.80(b), to determine the Hg concentration (*i.e.*, total vapor phase Hg) in the effluent.

(i) The testing shall be performed using one of the Hg reference methods listed in § 75.22(a)(7), and shall consist of a minimum of 3 runs at the normal unit operating load, while combusting coal. The coal combusted during the testing shall be representative of the coal that will be combusted at the start of the Hg mass emissions reduction program (preferably from the same source(s) of supply).

(ii) The minimum time per run shall be 1 hour if Method 30A is used. If either Method 29 in appendix A–8 to part

60 of this chapter, ASTM D6784–02 (the Ontario Hydro method) (incorporated by reference under § 75.6 of this part), or Method 30B is used, paired samples are required for each test run and the runs must be long enough to ensure that sufficient Hg is collected to analyze. When Method 29 in appendix A–8 to part 60 of this chapter or the Ontario Hydro method is used, the test results shall be based on the vapor phase Hg collected in the back-half of the sampling trains (*i.e.*, the non-filterable impinger catches). For each Method 29 in appendix A–8 to part 60 of this chapter, Method 30B, or Ontario Hydro method test run, the paired trains must meet the relative deviation (RD) requirement specified in § 75.22(a)(7) or Method 30B, as applicable. If the RD specification is met, the results of the two samples shall be averaged arithmetically.

(iii) If the unit is equipped with flue gas desulfurization or add-on Hg emission controls, the controls must be operating normally during the testing, and, for the purpose of establishing proper operation of the controls, the owner or operator shall record parametric data or SO_2 concentration data in accordance with § 75.58(b)(3)(i).

(iv) If two or more of units of the same type qualify as a group of identical units in accordance with § 75.19(c)(1)(iv)(B), the owner or operator may test a subset of these units in lieu of testing each unit individually. If this option is selected, the number of units required to be tested shall be determined from Table LM–4 in § 75.19. For the purposes of the required retests under paragraph (d)(4) of this section, EPA strongly recommends that (to the extent practicable) the same subset of the units not be tested in two successive retests, and that every effort be made to ensure that each unit in the group of identical units is tested in a timely manner.

(2)(i) Based on the results of the emission testing, Equation 1 of this section shall be used to provide a conservative estimate of the annual Hg mass emissions from the unit:

$$E = N\ K\ C_{Hg}\ Q_{max} \qquad \text{(Eq. 1)}$$

Where:

E = Estimated annual Hg mass emissions from the affected unit, (ounces/year)

K = Units conversion constant, 9.978×10^{-10} oz-scm/μg-scf

N = Either 8,760 (the number of hours in a year) or the maximum number of operating hours per year (if less than 8,760) allowed by the unit's Federally-enforceable operating permit.

C_{Hg} = The highest Hg concentration (μg/scm) from any of the test runs or 0.50 μg/scm, whichever is greater

Q_{max} = Maximum potential flow rate, determined according to section 2.1.4.1 of appendix A to this part, (scfh)

(ii) Equation 1 of this section assumes that the unit operates at its maximum potential flow rate, either year-round or for the maximum number of hours allowed by the operating permit (if unit operation is restricted to less than 8,760 hours per year). If the permit restricts the annual unit heat input but not the number of annual unit operating hours, the owner or operator may divide the allowable annual heat input (mmBtu) by the design rated heat input capacity of the unit (mmBtu/hr) to determine the value of ''N'' in Equation 1. Also, note that if the highest Hg concentration measured in any test run is less than 0.50 μg/scm, a default value of 0.50 μg/scm must be used in the calculations.

(3) If the estimated annual Hg mass emissions from paragraph (c)(2) of this section are 464 ounces per year or less, then the unit is eligible to use the monitoring provisions in paragraph (b) of this section, and continuous monitoring of the Hg concentration is not required (except as otherwise provided in paragraphs (e) and (f) of this section).

(d) If the owner or operator of an eligible unit under paragraph (c)(3) of this section elects not to continuously monitor Hg concentration, then the following requirements must be met:

(1) The results of the Hg emission testing performed under paragraph (c)

of this section shall be submitted as a certification application to the Administrator and to the permitting authority, no later than 45 days after the testing is completed. The calculations demonstrating that the unit emits 464 ounces (or less) per year of Hg shall also be provided, and the default Hg concentration that will be used for reporting under §75.84 shall be specified in both the electronic and hard copy portions of the monitoring plan for the unit. The methodology is considered to be provisionally certified as of the date and hour of completion of the Hg emission testing.

(2) Following initial certification, the same default Hg concentration value that was used to estimate the unit's annual Hg mass emissions under paragraph (c) of this section shall be reported for each unit operating hour, except as otherwise provided in paragraph (d)(4)(iv) or (d)(6) of this section. The default Hg concentration value shall be updated as appropriate, according to paragraph (d)(5) of this section.

(3) The hourly Hg mass emissions shall be calculated according to section 9.1.3 in appendix F to this part.

(4) The Hg emission testing described in paragraph (c) of this section shall be repeated periodically, for the purposes of quality-assurance, as follows:

(i) If the results of the certification testing under paragraph (c) of this section show that the unit emits 144 ounces (9 lb) of Hg per year or less, the first retest is required by the end of the fourth QA operating quarter (as defined in §72.2 of this chapter) following the calendar quarter of the certification testing; or

(ii) If the results of the certification testing under paragraph (c) of this section show that the unit emits more than 144 ounces of Hg per year, but less than or equal to 464 ounces per year, the first retest is required by the end of the second QA operating quarter (as defined in §72.2 of this chapter) following the calendar quarter of the certification testing; and

(iii) Thereafter, retesting shall be required either semiannually or annually (*i.e.*, by the end of the second or fourth QA operating quarter following the quarter of the previous test), depending on the results of the previous test. To determine whether the next retest is due within two or four QA operating quarters, substitute the highest Hg concentration from the current test or 0.50 μgm/scm (whichever is greater) into the equation in paragraph (c)(2) of this section. If the estimated annual Hg mass emissions exceeds 144 ounces, the next test is due within two QA operating quarters. If the estimated annual Hg mass emissions is 144 ounces or less, the next test is due within four QA operating quarters.

(iv) An additional retest is required when there is a change in the coal rank of the primary fuel (e.g., when the primary fuel is switched from bituminous coal to lignite). Use ASTM D388–99 (incorporated by reference under §75.6 of this part) to determine the coal rank. The four principal coal ranks are anthracitic, bituminous, subbituminous, and lignitic. The ranks of anthracite coal refuse (culm) and bituminous coal refuse (gob) shall be anthracitic and bituminous, respectively. The retest shall be performed within 720 unit operating hours of the change.

(5) The default Hg concentration used for reporting under §75.84 shall be updated after each required retest. This includes retests that are required prior to the compliance date in §75.80(b). The updated value shall either be the highest Hg concentration measured in any of the test runs or 0.50 μg/scm, whichever is greater. The updated value shall be applied beginning with the first unit operating hour in which Hg emissions data are required to be reported after completion of the retest, except as provided in paragraph (d)(4)(iv) of this section, where the need to retest is triggered by a change in the coal rank of the primary fuel. In that case, apply the updated default Hg concentration beginning with the first unit operating hour in which Hg emissions are required to be reported after the date and hour of the fuel switch.

(6) If the unit is equipped with a flue gas desulfurization system or add-on Hg controls, the owner or operator shall record the information required under §75.58(b)(3) for each unit operating hour, to document proper operation of the emission controls. For any

operating hour in which this documentation is unavailable, the maximum potential Hg concentration, as defined in section 2.1.7 of appendix A to this part, shall be reported.

(e) For units with common stack and multiple stack exhaust configurations, the use of the monitoring methodology described in paragraphs (b) through (d) of this section is restricted as follows:

(1) The methodology may not be used for reporting Hg mass emissions at a common stack unless all of the units using the common stack are affected units and the units' combined potential to emit does not exceed 464 ounces of Hg per year times the number of units sharing the stack, in accordance with paragraphs (c) and (d) of this section. If the test results demonstrate that the units sharing the common stack qualify as low mass emitters, the default Hg concentration used for reporting Hg mass emissions at the common stack shall either be the highest value obtained in any test run or 0.50 μg/scm, whichever is greater.

(i) The initial emission testing required under paragraph (c) of this section may be performed at the common stack if the following conditions are met. Otherwise, testing of the individual units (or a subset of the units, if identical, as described in paragraph (c)(1)(iv) of this section) is required:

(A) The testing must be done at a combined load corresponding to the designated normal load level (low, mid, or high) for the units sharing the common stack, in accordance with section 6.5.2.1 of appendix A to this part;

(B) All of the units that share the stack must be operating in a normal, stable manner and at typical load levels during the emission testing. The coal combusted in each unit during the testing must be representative of the coal that will be combusted in that unit at the start of the Hg mass emission reduction program (preferably from the same source(s) of supply);

(C) If flue gas desulfurization and/or add-on Hg emission controls are used to reduce level the emissions exiting from the common stack, these emission controls must be operating normally during the emission testing and, for the purpose of establishing proper operation of the controls, the owner or operator shall record parametric data or SO_2 concentration data in accordance with § 75.58(b)(3)(i);

(D) When calculating E, the estimated maximum potential annual Hg mass emissions from the stack, substitute the maximum potential flow rate through the common stack (as defined in the monitoring plan) and the highest concentration from any test run (or 0.50 μg/scm, if greater) into Equation 1;

(E) The calculated value of E shall be divided by the number of units sharing the stack. If the result, when rounded to the nearest ounce, does not exceed 464 ounces, the units qualify to use the low mass emission methodology; and

(F) If the units qualify to use the methodology, the default Hg concentration used for reporting at the common stack shall be the highest value obtained in any test run or 0.50 μg/scm, whichever is greater; or

(ii) The retests required under paragraph (d)(4) of this section may also be done at the common stack. If this testing option is chosen, the testing shall be done at a combined load corresponding to the designated normal load level (low, mid, or high) for the units sharing the common stack, in accordance with section 6.5.2.1 of appendix A to this part. Provided that the required load level is attained and that all of the units sharing the stack are fed from the same on-site coal supply during normal operation, it is not necessary for all of the units sharing the stack to be in operation during a retest. However, if two or more of the units that share the stack are fed from different on-site coal supplies (e.g., one unit burns low-sulfur coal for compliance and the other combusts higher-sulfur coal), then either:

(A) Perform the retest with all units in normal operation; or

(B) If this is not possible, due to circumstances beyond the control of the owner or operator (e.g., a forced unit outage), perform the retest with the available units operating and assess the test results as follows. Use the Hg concentration obtained in the retest for reporting purposes under this part if the concentration is greater than or equal to the value obtained in the most recent test. If the retested value is

lower than the Hg concentration from the previous test, continue using the higher value from the previous test for reporting purposes and use that same higher Hg concentration value in Equation 1 to determine the due date for the next retest, as described in paragraph (e)(1)(iii) of this section.

(iii) If testing is done at the common stack, the due date for the next scheduled retest shall be determined as follows:

(A) Substitute the maximum potential flow rate for the common stack (as defined in the monitoring plan) and the highest Hg concentration from any test run (or 0.50 μg/scm, if greater) into Equation 1;

(B) If the value of E obtained from Equation 1, rounded to the nearest ounce, is greater than 144 times the number of units sharing the common stack, but less than or equal to 464 times the number of units sharing the stack, the next retest is due in two QA operating quarters;

(C) If the value of E obtained from Equation 1, rounded to the nearest ounce, is less than or equal to 144 times the number of units sharing the common stack, the next retest is due in four QA operating quarters.

(2) For units with multiple stack or duct configurations, Hg emission testing must be performed separately on each stack or duct, and the sum of the estimated annual Hg mass emissions from the stacks or ducts must not exceed 464 ounces of Hg per year. For reporting purposes, the default Hg concentration used for each stack or duct shall either be the highest value obtained in any test run for that stack or 0.50 μgm/scm, whichever is greater.

(3) For units with a main stack and bypass stack configuration, Hg emission testing shall be performed only on the main stack. For reporting purposes, the default Hg concentration used for the main stack shall either be the highest value obtained in any test run for that stack or 0.50 μgm/scm, whichever is greater. Whenever the main stack is bypassed, the maximum potential Hg concentration, as defined in section 2.1.7 of appendix A to this part, shall be reported.

(f) At the end of each calendar year, if the cumulative annual Hg mass emissions from an affected unit have exceeded 464 ounces, then the owner shall install, certify, operate, and maintain a Hg concentration monitoring system or a sorbent trap monitoring system no later than 180 days after the end of the calendar year in which the annual Hg mass emissions exceeded 464 ounces. For common stack and multiple stack configurations, installation and certification of a Hg concentration or sorbent trap monitoring system on each stack (except for bypass stacks) is likewise required within 180 days after the end of the calendar year, if:

(1) The annual Hg mass emissions at the common stack have exceeded 464 ounces times the number of affected units using the common stack; or

(2) The sum of the annual Hg mass emissions from all of the multiple stacks or ducts has exceeded 464 ounces; or

(3) The sum of the annual Hg mass emissions from the main and bypass stacks has exceeded 464 ounces.

(g) For an affected unit that is using a Hg concentration CEMS or a sorbent trap system under § 75.81(a) to continuously monitor the Hg mass emissions, the owner or operator may switch to the methodology in § 75.81(b), provided that the applicable conditions in paragraphs (c) through (f) of this section are met.

[70 FR 28684, May 18, 2005, as amended at 72 FR 51528, Sept. 7, 2007; 73 FR 4360, Jan. 24, 2008]

§ 75.82 Monitoring of Hg mass emissions and heat input at common and multiple stacks.

(a) *Unit utilizing common stack with other affected unit(s).* When an affected unit utilizes a common stack with one or more affected units, but no non-affected units, the owner or operator shall either:

(1) Install, certify, operate, and maintain the monitoring systems described in § 75.81(a) at the common stack, record the combined Hg mass emissions for the units exhausting to the common stack. Alternatively, if, in accordance with § 75.81(e), each of the units using the common stack is demonstrated to emit less than 464 ounces of Hg per year, the owner or operator

may install, certify, operate and maintain the monitoring systems and perform the Hg emission testing described under § 75.81(b). If reporting of the unit heat input rate is required, determine the hourly unit heat input rates either by:

(i) Apportioning the common stack heat input rate to the individual units according to the procedures in § 75.16(e)(3); or

(ii) Installing, certifying, operating, and maintaining a flow monitoring system and diluent monitor in the duct to the common stack from each unit; or

(2) Install, certify, operate, and maintain the monitoring systems and (if applicable) perform the Hg emission testing described in § 75.81(a) or § 75.81(b) in the duct to the common stack from each unit.

(b) *Unit utilizing common stack with nonaffected unit(s).* When one or more affected units utilizes a common stack with one or more nonaffected units, the owner or operator shall either:

(1) Install, certify, operate, and maintain the monitoring systems and (if applicable) perform the Hg emission testing described in § 75.81(a) or § 75.81(b) in the duct to the common stack from each affected unit; or

(2) Install, certify, operate, and maintain the monitoring systems described in § 75.81(a) in the common stack; and

(i) Install, certify, operate, and maintain the monitoring systems and (if applicable) perform the Hg emission testing described in § 75.81(a) or § 75.81(b) in the duct to the common stack from each non-affected unit. The designated representative shall submit a petition to the permitting authority and the Administrator to allow a method of calculating and reporting the Hg mass emissions from the affected units as the difference between Hg mass emissions measured in the common stack and Hg mass emissions measured in the ducts of the non-affected units, not to be reported as an hourly value less than zero. The permitting authority and the Administrator may approve such a method whenever the designated representative demonstrates, to the satisfaction of the permitting authority and the Administrator, that the method ensures that the Hg mass emissions from the affected units are not underestimated; or

(ii) Count the combined emissions measured at the common stack as the Hg mass emissions for the affected units, for recordkeeping and compliance purposes, in accordance with paragraph (a) of this section; or

(iii) Submit a petition to the permitting authority and the Administrator to allow use of a method for apportioning Hg mass emissions measured in the common stack to each of the units using the common stack and for reporting the Hg mass emissions. The permitting authority and the Administrator may approve such a method whenever the designated representative demonstrates, to the satisfaction of the permitting authority and the Administrator, that the method ensures that the Hg mass emissions from the affected units are not underestimated.

(3) If the monitoring option in paragraph (b)(2) of this section is selected, and if heat input is required to be reported under the applicable State or Federal Hg mass emission reduction program that adopts the requirements of this subpart, the owner or operator shall either:

(i) Apportion the common stack heat input rate to the individual units according to the procedures in § 75.16(e)(3); or

(ii) Install a flow monitoring system and a diluent gas (O_2 or CO_2) monitoring system in the duct leading from each affected unit to the common stack, and measure the heat input rate in each duct, according to section 5.2 of appendix F to this part.

(c) *Unit with a main stack and a bypass stack.* Whenever any portion of the flue gases from an affected unit can be routed through a bypass stack to avoid the Hg monitoring system(s) installed on the main stack, the owner and operator shall either:

(1) Install, certify, operate, and maintain the monitoring systems described in § 75.81(a) on both the main stack and the bypass stack and calculate Hg mass emissions for the unit as the sum of the Hg mass emissions measured at the two stacks;

(2) Install, certify, operate, and maintain the monitoring systems described in § 75.81(a) at the main stack and

measure Hg mass emissions at the bypass stack using the appropriate reference methods in § 75.22(b). Calculate Hg mass emissions for the unit as the sum of the emissions recorded by the installed monitoring systems on the main stack and the emissions measured by the reference method monitoring systems;

(3) Install, certify, operate, and maintain the monitoring systems and (if applicable) perform the Hg emission testing described in § 75.81(a) or § 75.81(b) only on the main stack. If this option is chosen, it is not necessary to designate the exhaust configuration as a multiple stack configuration in the monitoring plan required under § 75.53, since only the main stack is monitored. For each unit operating hour in which the bypass stack is used, report, as applicable, the maximum potential Hg concentration (as defined in section 2.1.7 of appendix A to this part), and the appropriate substitute data values for flow rate, CO_2 concentration, O_2 concentration, and moisture (as applicable), in accordance with the missing data procedures of §§ 75.31 through 75.37; or

(4) If the monitoring option in paragraph (c)(1) or (c)(2) of this section is selected, and if heat input is required to be reported under the applicable State or Federal Hg mass emission reduction program that adopts the requirements of this subpart, the owner or operator shall:

(i) Use the installed flow and diluent monitors to determine the hourly heat input rate at each stack (mmBtu/hr), according to section 5.2 of appendix F to this part; and

(ii) Calculate the hourly heat input at each stack (in mmBtu) by multiplying the measured stack heat input rate by the corresponding stack operating time; and

(iii) Determine the hourly unit heat input by summing the hourly stack heat input values.

(d) *Unit with multiple stack or duct configuration.* When the flue gases from an affected unit discharge to the atmosphere through more than one stack, or when the flue gases from an affected unit utilize two or more ducts feeding into a single stack and the owner or operator chooses to monitor in the ducts rather than in the stack, the owner or operator shall either:

(1) Install, certify, operate, and maintain the monitoring systems and (if applicable) perform the Hg emission testing described in § 75.81(a) or § 75.81(b) in each of the multiple stacks and determine Hg mass emissions from the affected unit as the sum of the Hg mass emissions recorded for each stack. If another unit also exhausts flue gases into one of the monitored stacks, the owner or operator shall comply with the applicable requirements of paragraphs (a) and (b) of this section, in order to properly determine the Hg mass emissions from the units using that stack;

(2) Install, certify, operate, and maintain the monitoring systems and (if applicable) perform the Hg emission testing described in § 75.81(a) or § 75.81(b) in each of the ducts that feed into the stack, and determine Hg mass emissions from the affected unit using the sum of the Hg mass emissions measured at each duct, except that where another unit also exhausts flue gases to one or more of the stacks, the owner or operator shall also comply with the applicable requirements of paragraphs (a) and (b) of this section to determine and record Hg mass emissions from the units using that stack; or

(3) If the monitoring option in paragraph (d)(1) or (d)(2) of this section is selected, and if heat input is required to be reported under the applicable State or Federal Hg mass emission reduction program that adopts the requirements of this subpart, the owner or operator shall:

(i) Use the installed flow and diluent monitors to determine the hourly heat input rate at each stack or duct (mmBtu/hr), according to section 5.2 of appendix F to this part; and

(ii) Calculate the hourly heat input at each stack or duct (in mmBtu) by multiplying the measured stack (or duct) heat input rate by the corresponding stack (or duct) operating time; and

(iii) Determine the hourly unit heat input by summing the hourly stack (or duct) heat input values.

[70 FR 28684, May 18, 2005, as amended at; 73 FR 4362, Jan. 24, 2008]

§ 75.83 Calculation of Hg mass emissions and heat input rate.

The owner or operator shall calculate Hg mass emissions and heat input rate in accordance with the procedures in sections 9.1 through 9.3 of appendix F to this part.

§ 75.84 Recordkeeping and reporting.

(a) *General recordkeeping provisions.* The owner or operator of any affected unit shall maintain for each affected unit and each non-affected unit under § 75.82(b)(2)(ii) a file of all measurements, data, reports, and other information required by this part at the source in a form suitable for inspection for at least 3 years from the date of each record. Except for the certification data required in § 75.57(a)(4) and the initial submission of the monitoring plan required in § 75.57(a)(5), the data shall be collected beginning with the earlier of the date of provisional certification or the compliance deadline in § 75.80(b). The certification data required in § 75.57(a)(4) shall be collected beginning with the date of the first certification test performed. The file shall contain the following information:

(1) The information required in §§ 75.57(a)(2), (a)(4), (a)(5), (a)(6), (b), (c)(2), (g) (if applicable), (h), and (i) or (j) (as applicable). For the information in § 75.57(a)(2), replace the phrase ''the deadline in § 75.4(a), (b) or (c)'' with the phrase ''the applicable certification deadline under the State or Federal Hg mass emission reduction program'';

(2) The information required in § 75.58(b)(3), for units with flue gas desulfurization systems or add-on Hg emission controls;

(3) For affected units using Hg CEMS or sorbent trap monitoring systems, for each hour when the unit is operating, record the Hg mass emissions, calculated in accordance with section 9 of appendix F to this part.

(4) Heat input and Hg methodologies for the hour; and

(5) Formulas from monitoring plan for total Hg mass emissions and heat input rate (if applicable);

(b) *Certification, quality assurance and quality control record provisions.* The owner or operator of any affected unit shall record the applicable information in § 75.59 for each affected unit or group of units monitored at a common stack and each non-affected unit under § 75.82(b)(2)(ii).

(c) *Monitoring plan recordkeeping provisions.* (1) *General provisions.* The owner or operator of an affected unit shall prepare and maintain a monitoring plan for each affected unit or group of units monitored at a common stack and each non-affected unit under § 75.82(b)(2)(ii). The monitoring plan shall contain sufficient information on the continuous monitoring systems and the use of data derived from these systems to demonstrate that all the unit's Hg emissions are monitored and reported.

(2) *Updates.* Whenever the owner or operator makes a replacement, modification, or change in a certified continuous monitoring system or alternative monitoring system under subpart E of this part, including a change in the automated data acquisition and handling system or in the flue gas handling system, that affects information reported in the monitoring plan (*e.g.*, a change to a serial number for a component of a monitoring system), then the owner or operator shall update the monitoring plan.

(3) *Contents of the monitoring plan.* Each monitoring plan shall contain the information in § 75.53(g)(1) in electronic format and the information in § 75.53(g)(2) in hardcopy format.

(d) *General reporting provisions.* (1) The designated representative for an affected unit shall comply with all reporting requirements in this section and with any additional requirements set forth in an applicable State or Federal Hg mass emission reduction program that adopts the requirements of this subpart.

(2) The designated representative for an affected unit shall submit the following for each affected unit or group of units monitored at a common stack and each non-affected unit under § 75.82(b)(2)(ii):

(i) Initial certification and recertification applications in accordance with § 75.80(d);

(ii) Monitoring plans in accordance with paragraph (e) of this section; and

(iii) Quarterly reports in accordance with paragraph (f) of this section.

(3) *Other petitions and communications.* The designated representative for an affected unit shall submit petitions, correspondence, application forms, and petition-related test results in accordance with the provisions in § 75.80(h).

(4) *Quality assurance RATA reports.* If requested by the permitting authority, the designated representative of an affected unit shall submit the quality assurance RATA report for each affected unit or group of units monitored at a common stack and each non-affected unit under § 75.82(b)(2)(ii) by the later of 45 days after completing a quality assurance RATA according to section 2.3 of appendix B to this part or 15 days of receiving the request. The designated representative shall report the hardcopy information required by § 75.59(a)(9) to the permitting authority.

(5) *Notifications.* The designated representative for an affected unit shall submit written notice to the permitting authority according to the provisions in § 75.61 for each affected unit or group of units monitored at a common stack and each non-affected unit under § 75.82(b)(2)(ii).

(e) *Monitoring plan reporting*—(1) *Electronic submission.* The designated representative for an affected unit shall submit to the Administrator a complete, electronic, up-to-date monitoring plan file for each affected unit or group of units monitored at a common stack and each non-affected unit under § 75.82(b)(2)(ii), as follows: No later than 21 days prior to the commencement of initial certification testing; at the time of a certification or recertification application submission; and whenever an update of the electronic monitoring plan is required, either under § 75.53 or elsewhere in this part.

(2) *Hardcopy submission.* The designated representative of an affected unit shall submit all of the hardcopy information required under § 75.53, for each affected unit or group of units monitored at a common stack and each non-affected unit under § 75.82(b)(2)(ii), to the permitting authority prior to initial certification. Thereafter, the designated representative shall submit hardcopy information only if that portion of the monitoring plan is revised. The designated representative shall submit the required hardcopy information as follows: no later than 21 days prior to the commencement of initial certification testing; with any certification or recertification application, if a hardcopy monitoring plan change is associated with the recertification event; and within 30 days of any other event with which a hardcopy monitoring plan change is associated, pursuant to § 75.53(b). Electronic submittal of all monitoring plan information, including hardcopy portions, is permissible provided that a paper copy of the hardcopy portions can be furnished upon request.

(f) *Quarterly reports*—(1) *Electronic submission.* Electronic quarterly reports shall be submitted, beginning with the calendar quarter containing the compliance date in § 75.80(b), unless otherwise specified in the final rule implementing a State or Federal Hg mass emissions reduction program that adopts the requirements of this subpart. The designated representative for an affected unit shall report the data and information in this paragraph (f)(1) and the applicable compliance certification information in paragraph (f)(2) of this section to the Administrator quarterly, except as otherwise provided in § 75.64(a) for units in long-term cold storage. Each electronic report must be submitted to the Administrator within 30 days following the end of each calendar quarter. Except as otherwise provided in § 75.64(a)(4) and (a)(5), each electronic report shall include the date of report generation and the following information for each affected unit or group of units monitored at a common stack:

(i) The facility information in § 75.64(a)(3); and

(ii) The information and hourly data required in paragraphs (a) and (b) of this section, except for:

(A) Descriptions of adjustments, corrective action, and maintenance;

(B) Information which is incompatible with electronic reporting (*e.g.*, field data sheets, lab analyses, quality control plan);

(C) For units with flue gas desulfurization systems or with add-on Hg emission controls, the parametric information in § 75.58(b)(3);

(D) Information required by § 75.57(h) concerning the causes of any missing data periods and the actions taken to cure such causes;

(E) Hardcopy monitoring plan information required by § 75.53 and hardcopy test data and results required by § 75.59;

(F) Records of flow polynomial equations and numerical values required by § 75.59(a)(5)(vi);

(G) Stratification test results required as part of the RATA supplementary records under § 75.59(a)(7);

(H) Data and results of RATAs that are aborted or invalidated due to problems with the reference method or operational problems with the unit and data and results of linearity checks that are aborted or invalidated due to operational problems with the unit;

(I) Supplementary RATA information required under § 75.59(a)(7), except that:

(*1*) The applicable data elements under § 75.59(a)(7)(ii)(A) through (T) and under § 75.59(a)(7)(iii)(A) through (M) shall be reported for flow RATAs at circular or rectangular stacks (or ducts) in which angular compensation for yaw and/or pitch angles is used (*i.e.*, Method 2F or 2G in appendices A–1 and A–2 to part 60 of this chapter), with or without wall effects adjustments;

(*2*) The applicable data elements under § 75.59(a)(7)(ii)(A) through (T) and under § 75.59(a)(7)(iii)(A) through (M) shall be reported for any flow RATA run at a circular stack in which Method 2 in appendices A–1 and A–2 to part 60 of this chapter is used and a wall effects adjustment factor is determined by direct measurement;

(*3*) The data under § 75.59(a)(7)(ii)(T) shall be reported for all flow RATAs at circular stacks in which Method 2 in appendices A–1 and A–2 to part 60 of this chapter is used and a default wall effects adjustment factor is applied; and

(*4*) The data under § 75.59(a)(7)(ix)(A) through (F) shall be reported for all flow RATAs at rectangular stacks or ducts in which Method 2 in appendices A–1 and A–2 to part 60 of this chapter is used and a wall effects adjustment factor is applied.

(J) For units using sorbent trap monitoring systems, the hourly gas flow meter readings taken between the initial and final meter readings for the data collection period; and

(iii) Ounces of Hg emitted during quarter and cumulative ounces of Hg emitted in the year-to-date (rounded to the nearest thousandth); and

(iv) Unit or stack operating hours for quarter, cumulative unit or stack operating hours for year-to-date; and

(v) Reporting period heat input (if applicable) and cumulative, year-to-date heat input.

(2) *Compliance certification.* (i) The designated representative shall certify that the monitoring plan information in each quarterly electronic report (*i.e.*, component and system identification codes, formulas, etc.) represent current operating conditions for the affected unit(s)

(ii) The designated representative shall submit and sign a compliance certification in support of each quarterly emissions monitoring report based on reasonable inquiry of those persons with primary responsibility for ensuring that all of the unit's emissions are correctly and fully monitored. The certification shall state that:

(A) The monitoring data submitted were recorded in accordance with the applicable requirements of this part, including the quality assurance procedures and specifications; and

(B) With regard to a unit with an FGD system or with add-on Hg emission controls, that for all hours where data are substituted in accordance with § 75.38(b), the add-on emission controls were operating within the range of parameters listed in the quality-assurance plan for the unit (or that quality-assured SO_2 CEMS data were available to document proper operation of the emission controls), and that the substitute values do not systematically underestimate Hg emissions.

(3) *Additional reporting requirements.* The designated representative shall also comply with all of the quarterly reporting requirements in §§ 75.64(d), (f), and (g).

[70 FR 28684, May 18, 2005, as amended at 72 FR 51528, Sept. 7, 2007; 73 FR 4363, Jan. 24, 2008]

APPENDIX A TO PART 75—SPECIFICATIONS AND TEST PROCEDURES

1. INSTALLATION AND MEASUREMENT LOCATION

1.1 Gas and Hg Monitors

Following the procedures in section 8.1.1 of Performance Specification 2 in appendix B to part 60 of this chapter, install the pollutant concentration monitor or monitoring system at a location where the pollutant concentration and emission rate measurements are directly representative of the total emissions from the affected unit. Select a representative measurement point or path for the monitor probe(s) (or for the path from the transmitter to the receiver) such that the SO_2, CO_2, O_2, and NO_X concentration monitoring system or NO_X-diluent CEMS (NO_X pollutant concentration monitor and diluent gas monitor), Hg concentration monitoring system, or sorbent trap monitoring system will pass the relative accuracy test (see section 6 of this appendix).

It is recommended that monitor measurements be made at locations where the exhaust gas temperature is above the dewpoint temperature. If the cause of failure to meet the relative accuracy tests is determined to be the measurement location, relocate the monitor probe(s).

1.1.1 Point Monitors

Locate the measurement point (1) within the centroidal area of the stack or duct cross section, or (2) no less than 1.0 meter from the stack or duct wall.

1.1.2 Path Monitors

Locate the measurement path (1) totally within the inner area bounded by a line 1.0 meter from the stack or duct wall, or (2) such that at least 70.0 percent of the path is within the inner 50.0 percent of the stack or duct cross-sectional area, or (3) such that the path is centrally located within any part of the centroidal area.

1.2 Flow Monitors

Install the flow monitor in a location that provides representative volumetric flow over all operating conditions. Such a location is one that provides an average velocity of the flue gas flow over the stack or duct cross section, provides a representative SO_2 emission rate (in lb/hr), and is representative of the pollutant concentration monitor location. Where the moisture content of the flue gas affects volumetric flow measurements, use the procedures in both Reference Methods 1 and 4 of appendix A to part 60 of this chapter to establish a proper location for the flow monitor. The EPA recommends (but does not require) performing a flow profile study following the procedures in 40 CFR part 60, appendix A, method, 1, sections 11.5 or 11.4 for each of the three operating or load levels indicated in section 6.5.2.1 of this appendix to determine the acceptability of the potential flow monitor location and to determine the number and location of flow sampling points required to obtain a representative flow value. The procedure in 40 CFR part 60, appendix A, Test Method 1, section 11.5 may be used even if the flow measurement location is greater than or equal to 2 equivalent stack or duct diameters downstream or greater than or equal to ½ duct diameter upstream from a flow disturbance. If a flow profile study shows that cyclonic (or swirling) or stratified flow conditions exist at the potential flow monitor location that are likely to prevent the monitor from meeting the performance specifications of this part, then EPA recommends either (1) selecting another location where there is no cyclonic (or swirling) or stratified flow condition, or (2) eliminating the cyclonic (or swirling) or stratified flow condition by straightening the flow, e.g., by installing straightening vanes. EPA also recommends selecting flow monitor locations to minimize the effects of condensation, coating, erosion, or other conditions that could adversely affect flow monitor performance.

1.2.1 Acceptability of Monitor Location

The installation of a flow monitor is acceptable if either (1) the location satisfies the minimum siting criteria of method 1 in appendix A to part 60 of this chapter (i.e., the location is greater than or equal to eight stack or duct diameters downstream and two diameters upstream from a flow disturbance; or, if necessary, two stack or duct diameters downstream and one-half stack or duct diameter upstream from a flow disturbance), or (2) the results of a flow profile study, if performed, are acceptable (i.e., there are no cyclonic (or swirling) or stratified flow conditions), and the flow monitor also satisfies the performance specifications of this part. If the flow monitor is installed in a location that does not satisfy these physical criteria, but nevertheless the monitor achieves the performance specifications of this part, then the location is acceptable, notwithstanding the requirements of this section.

1.2.2 Alternative Monitoring Location

Whenever the owner or operator successfully demonstrates that modifications to the exhaust duct or stack (such as installation of straightening vanes, modifications of ductwork, and the like) are necessary for the flow monitor to meet the performance specifications, the Administrator may approve an interim alternative flow monitoring methodology and an extension to the required certification date for the flow monitor.

Where no location exists that satisfies the physical siting criteria in section 1.2.1, where

the results of flow profile studies performed at two or more alternative flow monitor locations are unacceptable, or where installation of a flow monitor in either the stack or the ducts is demonstrated to be technically infeasible, the owner or operator may petition the Administrator for an alternative method for monitoring flow.

2. EQUIPMENT SPECIFICATIONS

2.1 Instrument Span and Range

In implementing sections 2.1.1 through 2.1.6 of this appendix, set the measurement range for each parameter (SO_2, NO_X, CO_2, O_2, or flow rate) high enough to prevent full-scale exceedances from occurring, yet low enough to ensure good measurement accuracy and to maintain a high signal-to-noise ratio. To meet these objectives, select the range such that the majority of the readings obtained during typical unit operation are kept, to the extent practicable, between 20.0 and 80.0 percent of the full-scale range of the instrument. These guidelines do not apply to: (1) SO_2 readings obtained during the combustion of very low sulfur fuel (as defined in §72.2 of this chapter); (2) SO_2 or NO_X readings recorded on the high measurement range, for units with SO_2 or NO_X emission controls and two span values, unless the emission controls are operated seasonally (for example, only during the ozone season); or (3) SO_2 or NO_X readings less than 20.0 percent of full-scale on the low measurement range for a dual span unit, provided that the maximum expected concentration (MEC), low-scale span value, and low-scale range settings have been determined according to sections 2.1.1.2, 2.1.1.4(a), (b), and (g) of this appendix (for SO_2), or according to sections 2.1.2.2, 2.1.2.4(a) and (f) of this appendix (for NO_X).

2.1.1 SO_2 Pollutant Concentration Monitors

Determine, as indicated in sections 2.1.1.1 through 2.1.1.5 of this appendix the span value(s) and range(s) for an SO_2 pollutant concentration monitor so that all potential and expected concentrations can be accurately measured and recorded. Note that if a unit exclusively combusts fuels that are very low sulfur fuels (as defined in §72.2 of this chapter), the SO_2 monitor span requirements in §75.11(e)(3)(iv) apply in lieu of the requirements of this section.

2.1.1.1 Maximum Potential Concentration

(a) Make an initial determination of the maximum potential concentration (MPC) of SO_2 by using Equation A–1a or A–1b. Base the MPC calculation on the maximum percent sulfur and the minimum gross calorific value (GCV) for the highest-sulfur fuel to be burned. The maximum sulfur content and minimum GCV shall be determined from all available fuel sampling and analysis data for that fuel from the previous 12 months (minimum), excluding clearly anomalous fuel sampling values. If both the fuel sulfur content and the GCV are routinely determined from each fuel sample, the owner or operator may, as an alternative to using the highest individual percent sulfur and lowest individual GCV values in the MPC calculation, pair the sulfur content and GCV values from each sample analysis and calculate the ratio of percent sulfur to GCV (*i.e.*, %S/GCV) for each pair of values. If this option is selected, the MPC shall be calculated using the highest %S/GCV ratio in Equation A–1a or A–1b. If the designated representative certifies that the highest-sulfur fuel is never burned alone in the unit during normal operation but is always blended or co-fired with other fuel(s), the MPC may be calculated using a best estimate of the highest sulfur content and lowest gross calorific value expected for the blend or fuel mixture and inserting these values into Equation A–1a or A–1b. Derive the best estimate of the highest percent sulfur and lowest GCV for a blend or fuel mixture from weighted-average values based upon the historical composition of the blend or mixture in the previous 12 (or more) months. If insufficient representative fuel sampling data are available to determine the maximum sulfur content and minimum GCV, use values from contract(s) for the fuel(s) that will be combusted by the unit in the MPC calculation.

$$\text{MPC (or MEC)} = 11.32 \times 10^6 \left(\frac{\%S}{GCV}\right)\left(\frac{20.9 - \%O_{2w}}{20.9}\right) \qquad \text{(Eq. A-1a)}$$

or

$$\text{MPC (or MEC)} = 66.93 \times 10^6 \left(\frac{\%S}{GCV}\right)\left(\frac{\%CO_{2w}}{100}\right) \qquad \text{(Eq. A-1b)}$$

Where,

MPC = Maximum potential concentration (ppm, wet basis). (To convert to dry basis, divide the MPC by 0.9.)

MEC = Maximum expected concentration (ppm, wet basis). (To convert to dry basis, divide the MEC by 0.9).

%S = Maximum sulfur content of fuel to be fired, wet basis, weight percent, as determined according to the applicable method in paragraph (c) of section 2.1.1.1.

$\%O_{2w}$ = Minimum oxygen concentration, percent wet basis, under typical operating conditions.

$\%CO_{2w}$ = Maximum carbon dioxide concentration, percent wet basis, under typical operating conditions.

GCV = Minimum gross calorific value of the fuel or blend to be combusted, based on historical fuel sampling and analysis data or, if applicable, based on the fuel contract specifications (Btu/lb). If based on fuel sampling and analysis, the GCV shall be determined according to the applicable method in paragraph (c) of section 2.1.1.1.

11.32×10^6 = Oxygen-based conversion factor in Btu/lb (ppm)/%.

66.93×10^6 = Carbon dioxide-based conversion factor in Btu/lb (ppm)/%.

NOTE: All percent values to be inserted in the equations of this section are to be expressed as a percentage, not a fractional value (e.g., 3, not .03).

(b) Alternatively, if a certified SO_2 CEMS is already installed, the owner or operator may make the initial MPC determination based upon quality-assured historical data recorded by the CEMS. For the purposes of this section, 2.1.1.1, a ''certified'' CEMS means a CEM system that has met the applicable certification requirements of either: This part, or part 60 of this chapter, or a State CEM program, or the source operating permit. If this option is chosen, the MPC shall be the maximum SO_2 concentration observed during the previous 720 (or more) quality-assured monitor operating hours when combusting the highest-sulfur fuel (or highest-sulfur blend if fuels are always blended or co-fired) that is to be combusted in the unit or units monitored by the SO_2 monitor. For units with SO_2 emission controls, the certified SO_2 monitor used to determine the MPC must be located at or before the control device inlet. Report the MPC and the method of determination in the monitoring plan required under §75.53. Note that the initial MPC value is subject to periodic review under section 2.1.1.5 of this appendix. If an MPC value is found to be either inappropriately high or low, the MPC shall be adjusted in accordance with section 2.1.1.5, and corresponding span and range adjustments shall be made, if necessary.

(c) When performing fuel sampling to determine the MPC, use ASTM Methods: ASTM D3177–02 (Reapproved 2007), Standard Test Methods for Total Sulfur in the Analysis Sample of Coal and Coke; ASTM D4239–02, Standard Test Methods for Sulfur in the Analysis Sample of Coal and Coke Using High-Temperature Tube Furnace Combustion Methods; ASTM D4294–98, Standard Test Method for Sulfur in Petroleum and Petroleum Products by Energy-Dispersive X-ray Fluorescence Spectrometry; ASTM D1552–01, Standard Test Method for Sulfur in Petroleum Products (High-Temperature Method); ASTM D129–00, Standard Test Method for Sulfur in Petroleum Products (General Bomb Method); ASTM D2622–98, Standard Test Method for Sulfur in Petroleum Products by Wavelength Dispersive X-ray Fluorescence Spectrometry, for sulfur content of solid or liquid fuels; ASTM D3176–89 (Reapproved 2002), Standard Practice for Ultimate Analysis of Coal and Coke; ASTM D240–00, Standard Test Method for Heat of Combustion of Liquid Hydrocarbon Fuels by Bomb Calorimeter; or ASTM D5865–01a, Standard Test Method for Gross Calorific Value of Coal and Coke (all incorporated by reference under §75.6 of this part).

2.1.1.2 Maximum Expected Concentration

(a) Make an initial determination of the maximum expected concentration (MEC) of SO_2 whenever: (a) SO_2 emission controls are used; or (b) both high-sulfur and low-sulfur fuels (e.g., high-sulfur coal and low-sulfur coal or different grades of fuel oil) or high-sulfur and low-sulfur fuel blends are combusted as primary or backup fuels in a unit without SO_2 emission controls. For units with SO_2 emission controls, use Equation A–2 to make the initial MEC determination. When high-sulfur and low-sulfur fuels or blends are burned as primary or backup fuels in a unit without SO_2 controls, use Equation A–1a or A–1b to calculate the initial MEC value for each fuel or blend, except for: (1) the highest-sulfur fuel or blend (for which the MPC was previously calculated in section 2.1.1.1 of this appendix); (2) fuels or blends that are very low sulfur fuels (as defined in §72.2 of this chapter); or (3) fuels or blends that are used only for unit startup. Each initial MEC value shall be documented in the monitoring plan required under §75.53. Note that each initial MEC value is subject to periodic review under section 2.1.1.5 of this appendix. If an MEC value is found to be either inappropriately high or low, the MEC shall be adjusted in accordance with section 2.1.1.5, and corresponding span and range adjustments shall be made, if necessary.

(b) For each MEC determination, substitute into Equation A–1a or A–1b the highest sulfur content and minimum GCV value for that fuel or blend, based upon all available fuel sampling and analysis results from the previous 12 months (or more), or, if fuel

sampling data are unavailable, based upon fuel contract(s).

(c) Alternatively, if a certified SO_2 CEMS is already installed, the owner or operator may make the initial MEC determination(s) based upon historical monitoring data. For the purposes of this section, 2.1.1.2, a ''certified'' CEMS means a CEM system that has met the applicable certification requirements of either: This part, or part 60 of this chapter, or a State CEM program, or the source operating permit. If this option is chosen for a unit with SO_2 emission controls, the MEC shall be the maximum SO_2 concentration measured downstream of the control device outlet by the CEMS over the previous 720 (or more) quality-assured monitor operating hours with the unit and the control device both operating normally. For units that burn high- and low-sulfur fuels or blends as primary and backup fuels and have no SO_2 emission controls, the MEC for each fuel shall be the maximum SO_2 concentration measured by the CEMS over the previous 720 (or more) quality-assured monitor operating hours in which that fuel or blend was the only fuel being burned in the unit.

$$\mathrm{MEC} = \mathrm{MPC}\left(\frac{100 - \mathrm{RE}}{100}\right) \qquad \text{(Eq. A-2)}$$

Where:

MEC = Maximum expected concentration (ppm).

MPC = Maximum potential concentration (ppm), as determined by Eq. A–1a or A–1b in section 2.1.1.1 of this appendix.

RE = Expected average design removal efficiency of control equipment (%).

2.1.1.3 Span Value(s) and Range(s)

Determine the high span value and the high full-scale range of the SO_2 monitor as follows. (Note: For purposes of this part, the high span and range refer, respectively, either to the span and range of a single span unit or to the high span and range of a dual span unit.) The high span value shall be obtained by multiplying the MPC by a factor no less than 1.00 and no greater than 1.25. Round the span value upward to the next highest multiple of 100 ppm. If the SO_2 span concentration is ≤ 500 ppm, the span value may either be rounded upward to the next highest multiple of 10 ppm, or to the next highest multiple of 100 ppm. The high span value shall be used to determine concentrations of the calibration gases required for daily calibration error checks and linearity tests. Select the full-scale range of the instrument to be consistent with section 2.1 of this appendix and to be greater than or equal to the span value. Report the full-scale range setting and calculations of the MPC and span in the monitoring plan for the unit. Note that for certain applications, a second (low) SO_2 span and range may be required (see section 2.1.1.4 of this appendix). If an existing State, local, or federal requirement for span of an SO_2 pollutant concentration monitor requires or allows the use of a span value lower than that required by this section or by section 2.1.1.4 of this appendix, the State, local, or federal span value may be used if a satisfactory explanation is included in the monitoring plan, unless span and/or range adjustments become necessary in accordance with section 2.1.1.5 of this appendix. Span values higher than those required by either this section or section 2.1.1.4 of this appendix must be approved by the Administrator.

2.1.1.4 Dual Span and Range Requirements

For most units, the high span value based on the MPC, as determined under section 2.1.1.3 of this appendix will suffice to measure and record SO_2 concentrations (unless span and/or range adjustments become necessary in accordance with section 2.1.1.5 of this appendix). In some instances, however, a second (low) span value based on the MEC may be required to ensure accurate measurement of all possible or expected SO_2 concentrations. To determine whether two SO_2 span values are required, proceed as follows:

(a) For units with SO_2 emission controls, compare the MEC from section 2.1.1.2 of this appendix to the high full-scale range value from section 2.1.1.3 of this appendix. If the MEC is ≥20.0 percent of the high range value, then the high span value and range determined under section 2.1.1.3 of this appendix are sufficient. If the MEC is <20.0 percent of the high range value, then a second (low) span value is required.

(b) For units that combust high- and low-sulfur primary and backup fuels (or blends) and have no SO_2 controls, compare the high range value from section 2.1.1.3 of this appendix (for the highest-sulfur fuel or blend) to the MEC value for each of the other fuels or blends, as determined under section 2.1.1.2 of this appendix. If all of the MEC values are ≥20.0 percent of the high range value, the high span and range determined under section 2.1.1.3 of this appendix are sufficient, regardless of which fuel or blend is burned in the unit. If any MEC value is <20.0 percent of the high range value, then a second (low) span value must be used when that fuel or blend is combusted.

(c) When two SO_2 spans are required, the owner or operator may either use a single SO_2 analyzer with a dual range (i.e., low- and high-scales) or two separate SO_2 analyzers connected to a common sample probe and sample interface. Alternatively, if RATAs are performed and passed on both measurement ranges, the owner or operator may use two separate SO_2 analyzers connected to separate probes and sample interfaces. For units with SO_2 emission controls, the owner or operator may use a low range analyzer and a

default high range value, as described in paragraph (f) of this section, in lieu of maintaining and quality assuring a high-scale range. Other monitor configurations are subject to the approval of the Administrator.

(d) The owner or operator shall designate the monitoring systems and components in the monitoring plan under § 75.53 as follows: when a single probe and sample interface are used, either designate the low and high monitor ranges as separate SO_2 components of a single, primary SO_2 monitoring system; designate the low and high monitor ranges as the SO_2 components of two separate, primary SO_2 monitoring systems; designate the normal monitor range as a primary monitoring system and the other monitor range as a non-redundant backup monitoring system; or, when a single, dual-range SO_2 analyzer is used, designate the low and high ranges as a single SO_2 component of a primary SO_2 monitoring system (if this option is selected, use a special dual-range component type code, as specified by the Administrator, to satisfy the requirements of § 75.53(e)(1)(iv)(D)). When two SO_2 analyzers are connected to separate probes and sample interfaces, designate the analyzers as the SO_2 components of two separate, primary SO_2 monitoring systems. For units with SO_2 controls, if the default high range value is used, designate the low range analyzer as the SO_2 component of a primary SO_2 monitoring system. Do not designate the default high range as a monitoring system or component. Other component and system designations are subject to approval by the Administrator. Note that the component and system designations for redundant backup monitoring systems shall be the same as for primary monitoring systems.

(e) Each monitoring system designated as primary or redundant backup shall meet the initial certification and quality assurance requirements for primary monitoring systems in § 75.20(c) or § 75.20(d)(1), as applicable, and appendices A and B to this part, with one exception: relative accuracy test audits (RATAs) are required only on the normal range (for units with SO_2 emission controls, the low range is considered normal). Each monitoring system designated as a non-redundant backup shall meet the applicable quality assurance requirements in § 75.20(d)(2).

(f) For dual span units with SO_2 emission controls, the owner or operator may, as an alternative to maintaining and quality assuring a high monitor range, use a default high range value. If this option is chosen, the owner or operator shall report a default SO_2 concentration of 200 percent of the MPC for each unit operating hour in which the full-scale of the low range SO_2 analyzer is exceeded.

(g) The high span value and range shall be determined in accordance with section 2.1.1.3 of this appendix. The low span value shall be obtained by multiplying the MEC by a factor no less than 1.00 and no greater than 1.25, and rounding the result upward to the next highest multiple of 10 ppm (or 100 ppm, as appropriate). For units that burn high- and low-sulfur primary and backup fuels or blends and have no SO_2 emission controls, select, as the basis for calculating the appropriate low span value and range, the fuel-specific MEC value closest to 20.0 percent of the high full-scale range value (from paragraph (b) of this section). The low range must be greater than or equal to the low span value, and the required calibration gases must be selected based on the low span value. However, if the default high range option in paragraph (f) of this section is selected, the full-scale of the low measurement range shall not exceed five times the MEC value (where the MEC is rounded upward to the next highest multiple of 10 ppm). For units with two SO_2 spans, use the low range whenever the SO_2 concentrations are expected to be consistently below 20.0 percent of the high full-scale range value, i.e., when the MEC of the fuel or blend being combusted is less than 20.0 percent of the high full-scale range value. When the full-scale of the low range is exceeded, the high range shall be used to measure and record the SO_2 concentrations; or, if applicable, the default high range value in paragraph (f) of this section shall be reported for each hour of the full-scale exceedance.

2.1.1.5 Adjustment of Span and Range

For each affected unit or common stack, the owner or operator shall make a periodic evaluation of the MPC, MEC, span, and range values for each SO_2 monitor (at a minimum, an annual evaluation is required) and shall make any necessary span and range adjustments, with corresponding monitoring plan updates, as described in paragraphs (a), (b), and (c) of this section. Span and range adjustments may be required, for example, as a result of changes in the fuel supply, changes in the manner of operation of the unit, or installation or removal of emission controls. In implementing the provisions in paragraphs (a) and (b) of this section, SO_2 data recorded during short-term, non-representative process operating conditions (e.g., a trial burn of a different type of fuel) shall be excluded from consideration. The owner or operator shall keep the results of the most recent span and range evaluation on-site, in a format suitable for inspection. Make each required span or range adjustment no later than 45 days after the end of the quarter in which the need to adjust the span or range is identified, except that up to 90 days after the end of that quarter may be taken to implement a span adjustment if the calibration gases currently being used for daily calibration error tests and linearity checks are unsuitable for use with the new span value.

(a) If the fuel supply, the composition of the fuel blend(s), the emission controls, or the manner of operation change such that the maximum expected or potential concentration changes significantly, adjust the span and range setting to assure the continued accuracy of the monitoring system. A ''significant'' change in the MPC or MEC means that the guidelines in section 2.1 of this appendix can no longer be met, as determined by either a periodic evaluation by the owner or operator or from the results of an audit by the Administrator. The owner or operator should evaluate whether any planned changes in operation of the unit may affect the concentration of emissions being emitted from the unit or stack and should plan any necessary span and range changes needed to account for these changes, so that they are made in as timely a manner as practicable to coordinate with the operational changes. Determine the adjusted span(s) using the procedures in sections 2.1.1.3 and 2.1.1.4 of this appendix (as applicable). Select the full-scale range(s) of the instrument to be greater than or equal to the new span value(s) and to be consistent with the guidelines of section 2.1 of this appendix.

(b) Whenever a full-scale range is exceeded during a quarter and the exceedance is not caused by a monitor out-of-control period, proceed as follows:

(1) For exceedances of the high range, report 200.0 percent of the current full-scale range as the hourly SO_2 concentration for each hour of the full-scale exceedance and make appropriate adjustments to the MPC, span, and range to prevent future full-scale exceedances.

(2) For units with two SO_2 spans and ranges, if the low range is exceeded, no further action is required, provided that the high range is available and its most recent calibration error test and linearity check have not expired. However, if either of these quality assurance tests has expired and the high range is not able to provide quality assured data at the time of the low range exceedance or at any time during the continuation of the exceedance, report the MPC as the SO_2 concentration until the readings return to the low range or until the high range is able to provide quality assured data (unless the reason that the high-scale range is not able to provide quality assured data is because the high-scale range has been exceeded; if the high-scale range is exceeded follow the procedures in paragraph (b)(1) of this section).

(c) Whenever changes are made to the MPC, MEC, full-scale range, or span value of the SO_2 monitor, as described in paragraphs (a) or (b) of this section, record and report (as applicable) the new full-scale range setting, the new MPC or MEC and calculations of the adjusted span value in an updated monitoring plan. The monitoring plan update shall be made in the quarter in which the changes become effective. In addition, record and report the adjusted span as part of the records for the daily calibration error test and linearity check specified by appendix B to this part. Whenever the span value is adjusted, use calibration gas concentrations that meet the requirements of section 5.1 of this appendix, based on the adjusted span value. When a span adjustment is so significant that the calibration gases currently being used for daily calibration error tests and linearity checks are unsuitable for use with the new span value, then a diagnostic linearity test using the new calibration gases must be performed and passed. Use the data validation procedures in §75.20(b)(3), beginning with the hour in which the span is changed.

2.1.2 NO_X Pollutant Concentration Monitors

Determine, as indicated in sections 2.1.2.1 through 2.1.2.5 of this appendix, the span and range value(s) for the NO_X pollutant concentration monitor so that all expected NO_X concentrations can be determined and recorded accurately.

2.1.2.1 Maximum Potential Concentration

(a) The maximum potential concentration (MPC) of NO_X for each affected unit shall be based upon whichever fuel or blend combusted in the unit produces the highest level of NO_X emissions. For the purposes of this section, 2.1.2.1, and section 2.1.2.2 of this appendix, a ''blend'' means a frequently-used fuel mixture having a consistent composition (e.g., an oil and gas mixture where the relative proportions of the two fuels vary by no more than 10%, on average). Make an initial determination of the MPC using the appropriate option as follows:

Option 1: Use 800 ppm for coal-fired and 400 ppm for oil- or gas-fired units as the maximum potential concentration of NO_X (if an MPC of 1600 ppm for coal-fired units or 480 ppm for oil- or gas-fired units was previously selected under this section, that value may still be used, provided that the guidelines of section 2.1 of this appendix are met); For cement kilns, use 2000 ppm as the MPC. For process heaters, use 200 ppm if the unit burns only gaseous fuel and 500 ppm if the unit burns oil;

Option 2: Use the specific values based on boiler type and fuel combusted, listed in Table 2–1 or Table 2–2; For a new gas-fired or oil-fired combustion turbine, if a default MPC value of 50 ppm was previously selected from Table 2–2, that value may be used until March 31, 2003;

Option 3: Use NO_X emission test results;

Option 4: Use historical CEM data over the previous 720 (or more) unit operating hours when combusting the fuel or blend with the highest NO_X emission rate; or

Option 5: If a reliable estimate of the uncontrolled NO_X emissions from the unit is available from the manufacturer, the estimated value may be used.

(b) For the purpose of providing substitute data during NO_X missing data periods in accordance with §§75.31 and 75.33 and as required elsewhere under this part, the owner or operator shall also calculate the maximum potential NO_X emission rate (MER), in lb/mmBtu, by substituting the MPC for NO_X in conjunction with the minimum expected CO_2 or maximum O_2 concentration (under all unit operating conditions except for unit startup, shutdown, and upsets) and the appropriate F-factor into the applicable equation in appendix F to this part. The diluent cap value of 5.0 percent CO_2 (or 14.0 percent O_2) for boilers or 1.0 percent CO_2 (or 19.0 percent O_2) for combustion turbines may be used in the NO_X MER calculation. As a second alternative, when the NO_X MPC is determined from emission test results or from historical CEM data, as described in paragraphs (a), (d) and (e) of this section, quality-assured diluent gas (i.e., O_2 or CO_2) data recorded concurrently with the MPC may be used to calculate the MER.

(c) Report the method of determining the initial MPC and the calculation of the maximum potential NO_X emission rate in the monitoring plan for the unit. Note that whichever MPC option in paragraph 2.1.2.1(a) of this appendix is selected, the initial MPC value is subject to periodic review under section 2.1.2.5 of this appendix. If an MPC value is found to be either inappropriately high or low, the MPC shall be adjusted in accordance with section 2.1.2.5, and corresponding span and range adjustments shall be made, if necessary.

(d) For units with add-on NO_X controls (whether or not the unit is equipped with low-NO_X burner technology), or for units equipped with dry low-NO_X (DLN) technology, NO_X emission testing may only be used to determine the MPC if testing can be performed either upstream of the add-on controls or during a time or season when the add-on controls are not in operation or when the DLN controls are not in the premixed (low-NO_X) mode. If NO_X emission testing is performed, use the following guidelines. Use Method 7E from appendix A to part 60 of this chapter to measure total NO_X concentration. (Note: Method 20 from appendix A to part 60 may be used for gas turbines, instead of Method 7E.) Operate the unit, or group of units sharing a common stack, at the minimum safe and stable load, the normal load, and the maximum load. If the normal load and maximum load are identical, an intermediate level need not be tested. Operate at the highest excess O_2 level expected under normal operating conditions. Make at least three runs of 20 minutes (minimum) duration with three traverse points per run at each operating condition. Select the highest point NO_X concentration from all test runs as the MPC for NO_X.

(e) If historical CEM data are used to determine the MPC, the data must, for uncontrolled units or units equipped with low-NO_X burner technology and no other NO_X controls, represent a minimum of 720 quality-assured monitor operating hours from the NO_X component of a certified monitoring system, obtained under various operating conditions including the minimum safe and stable load, normal load (including periods of high excess air at normal load), and maximum load. For the purposes of this section, 2.1.2.1, a ''certified'' CEMS means a CEM system that has met the applicable certification requirements of either: this part, or part 60 of this chapter, or a State CEM program, or the source operating permit. For a unit with add-on NO_X controls (whether or not the unit is equipped with low-NO_X burner technology), or for a unit equipped with dry low-NO_X (DLN) technology, historical CEM data may only be used to determine the MPC if the 720 quality-assured monitor operating hours of CEM data are collected upstream of the add-on controls or if the 720 hours of data include periods when the add-on controls are not in operation or when the DLN controls are not in the premixed (low-NO_X mode). For units that do not produce electrical or thermal output, the data must represent the full range of normal process operation. The highest hourly NO_X concentration in ppm shall be the MPC.

TABLE 2–1—MAXIMUM POTENTIAL CONCENTRATION FOR NO_X—COAL-FIRED UNITS

Unit type	Maximum potential concentration for NO_X (ppm)
Tangentially-fired dry bottom and fluidized bed	460
Wall-fired dry bottom, turbo-fired dry bottom, stokers	675
Roof-fired (vertically-fired) dry bottom, cell burners, arch-fired	975
Cyclone, wall-fired wet bottom, wet bottom turbo-fired	1200
Others	(1)

[1] As approved by the Administrator.

TABLE 2-2. -- MAXIMUM POTENTIAL CONCENTRATION FOR NO_X --
Gas- And Oil-Fired Units

Unit type	Maximum potential concentration for NO_x (ppm)
Tangentially-fired dry bottom	380
Wall-fired dry bottom	600
Roof-fired (vertically-fired) dry bottom, arch-fired	550
Existing combustion turbine	200
New combustion turbine, permitted to fire either oil or natural gas	200
New combustion turbine, permitted to fire only natural gas	150
Others	[1]

[1] As approved by the Administrator

2.1.2.2 Maximum Expected Concentration

(a) Make an initial determination of the maximum expected concentration (MEC) of NO_X during normal operation for affected units with add-on NO_X controls of any kind (*e.g.*, steam injection, water injection, SCR, or SNCR) and for turbines that use dry low-NO_X technology. Determine a separate MEC value for each type of fuel (or blend) combusted in the unit, except for fuels that are only used for unit startup and/or flame stabilization. Calculate the MEC of NO_X using Equation A–2, if applicable, inserting the maximum potential concentration, as determined using the procedures in section 2.1.2.1 of this appendix. Where Equation A–2 is not applicable, set the MEC either by: (1) measuring the NO_X concentration using the testing procedures in this section; (2) using historical CEM data over the previous 720 (or more) quality-assured monitor operating hours; or (3) if the unit has add-on NO_X controls or uses dry low NO_X technology, and has a federally-enforceable permit limit for NO_X concentration, the permit limit may be used as the MEC. Include in the monitoring plan for the unit each MEC value and the method by which the MEC was determined. Note that each initial MEC value is subject to periodic review under section 2.1.2.5 of this appendix. If an MEC value is found to be either inappropriately high or low, the MEC shall be adjusted in accordance with section 2.1.2.5, and corresponding span and range adjustments shall be made, if necessary.

(b) If NO_X emission testing is used to determine the MEC value(s), the MEC for each type of fuel (or blend) shall be based upon testing at minimum load, normal load, and maximum load. At least three tests of 20 minutes (minimum) duration, using at least three traverse points, shall be performed at each load, using Method 7E from appendix A to part 60 of this chapter (Note: Method 20 from appendix A to part 60 may be used for gas turbines instead of Method 7E). The test must be performed at a time when all NO_X control devices and methods used to reduce NO_X emissions (if applicable) are operating properly. The testing shall be conducted downstream of all NO_X controls. The highest point NO_X concentration (e.g., the highest one-minute average) recorded during any of the test runs shall be the MEC.

(c)If historical CEM data are used to determine the MEC value(s), the MEC for each type of fuel shall be based upon 720 (or more) hours of quality-assured data from the NO_X component of a certified monitoring system representing the entire load range under stable operating conditions. For the purposes of this section, 2.1.2.2, a "certified" CEMS means a CEM system that has met the applicable certification requirements of either: this part, or part 60 of this chapter, or a State CEM program, or the source operating permit. The data base for the MEC shall not include any CEM data recorded during unit startup, shutdown, or malfunction or (for units with add-on NO_X controls or turbines using dry low NO_X technology) during any NO_X control device malfunctions or outages. All NO_X control devices and methods used to reduce NO_X emissions (if applicable) must be operating properly during each hour. The CEM data shall be collected downstream of all NO_X controls. For each type of fuel, the highest of the 720 (or more) quality-assured hourly average NO_X concentrations recorded by the CEMS shall be the MEC.

2.1.2.3 Span Value(s) and Range(s)

(a) Determine the high span value of the NO_X monitor as follows. The high span value shall be obtained by multiplying the MPC by a factor no less than 1.00 and no greater than 1.25. Round the span value upward to the next highest multiple of 100 ppm. If the NO_X

span concentration is ≤500 ppm, the span value may either be rounded upward to the next highest multiple of 10 ppm, or to the next highest multiple of 100 ppm. The high span value shall be used to determine the concentrations of the calibration gases required for daily calibration error checks and linearity tests. Note that for certain applications, a second (low) NO_X span and range may be required (see section 2.1.2.4 of this appendix).

(b) If an existing State, local, or federal requirement for span of a NO_X pollutant concentration monitor requires or allows the use of a span value lower than that required by this section or by section 2.1.2.4 of this appendix, the State, local, or federal span value may be used, where a satisfactory explanation is included in the monitoring plan, unless span and/or range adjustments become necessary in accordance with section 2.1.2.5 of this appendix. Span values higher than required by this section or by section 2.1.2.4 of this appendix must be approved by the Administrator.

(c) Select the full-scale range of the instrument to be consistent with section 2.1 of this appendix and to be greater than or equal to the high span value. Include the full-scale range setting and calculations of the MPC and span in the monitoring plan for the unit.

2.1.2.4 Dual Span and Range Requirements

For most units, the high span value based on the MPC, as determined under section 2.1.2.3 of this appendix will suffice to measure and record NO_X concentrations (unless span and/or range adjustments must be made in accordance with section 2.1.2.5 of this appendix). In some instances, however, a second (low) span value based on the MEC may be required to ensure accurate measurement of all expected and potential NO_X concentrations. To determine whether two NO_X spans are required, proceed as follows:

(a) Compare the MEC value(s) determined in section 2.1.2.2 of this appendix to the high full-scale range value determined in section 2.1.2.3 of this appendix. If the MEC values for all fuels (or blends) are ≥20.0 percent of the high range value, the high span and range values determined under section 2.1.2.3 of this appendix are sufficient, irrespective of which fuel or blend is combusted in the unit. If any of the MEC values is <20.0 percent of the high range value, two spans (low and high) are required, one based on the MPC and the other based on the MEC.

(b) When two NO_X spans are required, the owner or operator may either use a single NO_X analyzer with a dual range (low-and high-scales) or two separate NO_X analyzers connected to a common sample probe and sample interface. Two separate NO_X analyzers connected to separate probes and sample interfaces may be used if RATAs are passed on both ranges. For units with add-on NO_X emission controls (e.g., steam injection, water injection, SCR, or SNCR) or units equipped with dry low-NO_X technology, the owner or operator may use a low range analyzer and a ''default high range value,'' as described in paragraph 2.1.2.4(e) of this section, in lieu of maintaining and quality assuring a high-scale range. Other monitor configurations are subject to the approval of the Administrator.

(c) The owner or operator shall designate the monitoring systems and components in the monitoring plan under §75.53 as follows: when a single probe and sample interface are used, either designate the low and high ranges as separate NO_X components of a single, primary NO_X monitoring system; designate the low and high ranges as the NO_X components of two separate, primary NO_X monitoring systems; designate the normal range as a primary monitoring system and the other range as a non-redundant backup monitoring system; or, when a single, dual-range NO_X analyzer is used, designate the low and high ranges as a single NO_X component of a primary NO_X monitoring system (if this option is selected, use a special dual-range component type code, as specified by the Administrator, to satisfy the requirements of §75.53(e)(1)(iv)(D)). When two NO_X analyzers are connected to separate probes and sample interfaces, designate the analyzers as the NO_X components of two separate, primary NO_X monitoring systems. For units with add-on NO_X controls or units equipped with dry low-NO_X technology, if the default high range value is used, designate the low range analyzer as the NO_X component of the primary NO_X monitoring system. Do not designate the default high range as a monitoring system or component. Other component and system designations are subject to approval by the Administrator. Note that the component and system designations for redundant backup monitoring systems shall be the same as for primary monitoring systems.

(d) Each monitoring system designated as primary or redundant backup shall meet the initial certification and quality assurance requirements in §75.20(c) (for primary monitoring systems), in §75.20(d)(1) (for redundant backup monitoring systems) and appendices A and B to this part, with one exception: relative accuracy test audits (RATAs) are required only on the normal range (for dual span units with add-on NO_X emission controls, the low range is considered normal). Each monitoring system designated as non-redundant backup shall meet the applicable quality assurance requirements in §75.20(d)(2).

(e) For dual span units with add-on NO_X emission controls (e.g., steam injection, water injection, SCR, or SNCR), or, for units that use dry low NO_X technology, the owner

or operator may, as an alternative to maintaining and quality assuring a high monitor range, use a default high range value. If this option is chosen, the owner or operator shall report a default value of 200.0 percent of the MPC for each unit operating hour in which the full-scale of the low range NO_X analyzer is exceeded.

(f) The high span and range shall be determined in accordance with section 2.1.2.3 of this appendix. The low span value shall be 100.0 to 125.0 percent of the MEC, rounded up to the next highest multiple of 10 ppm (or 100 ppm, if appropriate). If more than one MEC value (as determined in section 2.1.2.2 of this appendix) is <20.0 percent of the high full-scale range value, the low span value shall be based upon whichever MEC value is closest to 20.0 percent of the high range value. The low range must be greater than or equal to the low span value, and the required calibration gases for the low range must be selected based on the low span value. However, if the default high range option in paragraph (e) of this section is selected, the full-scale of the low measurement range shall not exceed five times the MEC value (where the MEC is rounded upward to the next highest multiple of 10 ppm). For units with two NO_X spans, use the low range whenever NO_X concentrations are expected to be consistently <20.0 percent of the high range value, i.e., when the MEC of the fuel being combusted is <20.0 percent of the high range value. When the full-scale of the low range is exceeded, the high range shall be used to measure and record the NO_X concentrations; or, if applicable, the default high range value in paragraph (e) of this section shall be reported for each hour of the full-scale exceedance.

2.1.2.5 Adjustment of Span and Range

For each affected unit or common stack, the owner or operator shall make a periodic evaluation of the MPC, MEC, span, and range values for each NO_X monitor (at a minimum, an annual evaluation is required) and shall make any necessary span and range adjustments, with corresponding monitoring plan updates, as described in paragraphs (a), (b), and (c) of this section. Span and range adjustments may be required, for example, as a result of changes in the fuel supply, changes in the manner of operation of the unit, or installation or removal of emission controls. In implementing the provisions in paragraphs (a) and (b) of this section, note that NO_X data recorded during short-term, non-representative operating conditions (e.g., a trial burn of a different type of fuel) shall be excluded from consideration. The owner or operator shall keep the results of the most recent span and range evaluation on-site, in a format suitable for inspection. Make each required span or range adjustment no later than 45 days after the end of the quarter in which the need to adjust the span or range is identified, except that up to 90 days after the end of that quarter may be taken to implement a span adjustment if the calibration gases currently being used for daily calibration error tests and linearity checks are unsuitable for use with the new span value.

(a) If the fuel supply, emission controls, or other process parameters change such that the maximum expected concentration or the maximum potential concentration changes significantly, adjust the NO_X pollutant concentration span(s) and (if necessary) monitor range(s) to assure the continued accuracy of the monitoring system. A ''significant'' change in the MPC or MEC means that the guidelines in section 2.1 of this appendix can no longer be met, as determined by either a periodic evaluation by the owner or operator or from the results of an audit by the Administrator. The owner or operator should evaluate whether any planned changes in operation of the unit or stack may affect the concentration of emissions being emitted from the unit and should plan any necessary span and range changes needed to account for these changes, so that they are made in as timely a manner as practicable to coordinate with the operational changes. An example of a change that may require a span and range adjustment is the installation of low-NO_X burner technology on a previously uncontrolled unit. Determine the adjusted span(s) using the procedures in section 2.1.2.3 or 2.1.2.4 of this appendix (as applicable). Select the full-scale range(s) of the instrument to be greater than or equal to the adjusted span value(s) and to be consistent with the guidelines of section 2.1 of this appendix.

(b) Whenever a full-scale range is exceeded during a quarter and the exceedance is not caused by a monitor out-of-control period, proceed as follows:

(1) For exceedances of the high range, report 200.0 percent of the current full-scale range as the hourly NO_X concentration for each hour of the full-scale exceedance and make appropriate adjustments to the MPC, span, and range to prevent future full-scale exceedances.

(2) For units with two NO_X spans and ranges, if the low range is exceeded, no further action is required, provided that the high range is available and its most recent calibration error test and linearity check have not expired. However, if either of these quality assurance tests has expired and the high range is not able to provide quality assured data at the time of the low range exceedance or at any time during the continuation of the exceedance, report the MPC as the NO_X concentration until the readings return to the low range or until the high range is able to provide quality assured data (unless the reason that the high-scale range is not able to provide quality assured data is

because the high-scale range has been exceeded; if the high-scale range is exceeded, follow the procedures in paragraph (b)(1) of this section).

(c) Whenever changes are made to the MPC, MEC, full-scale range, or span value of the NO_X monitor as described in paragraphs (a) and (b) of this section, record and report (as applicable) the new full-scale range setting, the new MPC or MEC, maximum potential NO_X emission rate, and the adjusted span value in an updated monitoring plan for the unit. The monitoring plan update shall be made in the quarter in which the changes become effective. In addition, record and report the adjusted span as part of the records for the daily calibration error test and linearity check required by appendix B to this part. Whenever the span value is adjusted, use calibration gas concentrations that meet the requirements of section 5.1 of this appendix, based on the adjusted span value. When a span adjustment is significant enough that the calibration gases currently being used for daily calibration error tests and linearity checks are unsuitable for use with the new span value, a diagnostic linearity test using the new calibration gases must be performed and passed. Use the data validation procedures in §75.20(b)(3), beginning with the hour in which the span is changed.

2.1.3 CO_2 and O_2 Monitors

* * * If a dual-range or autoranging diluent analyzer is installed, the analyzer may be represented in the monitoring plan as a single component, using a special component type code specified by the Administrator to satisfy the requirements of §75.53(e)(1)(iv)(D).

2.1.3 CO_2 and O_2 Monitors

For an O_2 monitor (including O_2 monitors used to measure CO_2 emissions or percentage moisture), select a span value between 15.0 and 25.0 percent O_2. For a CO_2 monitor installed on a boiler, select a span value between 14.0 and 20.0 percent CO_2. For a CO_2 monitor installed on a combustion turbine, an alternative span value between 6.0 and 14.0 percent CO_2 may be used. An alternative CO_2 span value below 6.0 percent may be used if an appropriate technical justification is included in the hardcopy monitoring plan. An alternative O_2 span value below 15.0 percent O_2 may be used if an appropriate technical justification is included in the monitoring plan (e.g., O_2 concentrations above a certain level create an unsafe operating condition). Select the full-scale range of the instrument to be consistent with section 2.1 of this appendix and to be greater than or equal to the span value. Select the calibration gas concentrations for the daily calibration error tests and linearity checks in accordance with section 5.1 of this appendix, as percentages of the span value. For O_2 monitors with span values ≥21.0 percent O_2, purified instrument air containing 20.9 percent O_2 may be used as the high-level calibration material. If a dual-range or autoranging diluent analyzer is installed, the analyzer may be represented in the monitoring plan as a single component, using a special component type code specified by the Administrator to satisfy the requirements of §75.53(e)(1)(iv)(D).

2.1.3.1 Maximum Potential Concentration of CO_2

The MPC and MEC values for diluent monitors are subject to the same periodic review as SO_2 and NO_X monitors (see sections 2.1.1.5 and 2.1.2.5 of this appendix). If an MPC or MEC value is found to be either inappropriately high or low, the MPC shall be adjusted and corresponding span and range adjustments shall be made, if necessary.

For CO_2 pollutant concentration monitors, the maximum potential concentration shall be 14.0 percent CO_2 for boilers and 6.0 percent CO_2 for combustion turbines. Alternatively, the owner or operator may determine the MPC based on a minimum of 720 hours of quality-assured historical CEM data representing the full operating load range of the unit(s). Note that the MPC for CO_2 monitors shall only be used for the purpose of providing substitute data under this part. The CO_2 monitor span and range shall be determined according to section 2.1.3 of this appendix.

2.1.3.2 Minimum Potential Concentration of O_2

The owner or operator of a unit that uses a flow monitor and an O_2 diluent monitor to determine heat input in accordance with Equation F–17 or F–18 in appendix F to this part shall, for the purposes of providing substitute data under §75.36, determine the minimum potential O_2 concentration. The minimum potential O_2 concentration shall be based upon 720 hours or more of quality-assured CEM data, representing the full operating load range of the unit(s). The minimum potential O_2 concentration shall be the lowest quality-assured hourly average O_2 concentration recorded in the 720 (or more) hours of data used for the determination.

2.1.3.3 Adjustment of Span and Range

The MPC and MEC values for diluent monitors are subject to the same periodic review as SO_2 and NO_X monitors (see sections 2.1.1.5 and 2.1.2.5 of this appendix). If an MPC or MEC value is found to be either inappropriately high or low, the MPC shall be adjusted and corresponding span and range adjustments shall be made, if necessary. Adjust the span value and range of a CO_2 or O_2 monitor

in accordance with section 2.1.1.5 of this appendix (insofar as those provisions are applicable), with the term ''CO_2 or O_2'' applying instead of the term ''SO_2''. Set the new span and range in accordance with section 2.1.3 of this appendix and report the new span value in the monitoring plan.

2.1.4 Flow Monitors

Select the full-scale range of the flow monitor so that it is consistent with section 2.1 of this appendix and can accurately measure all potential volumetric flow rates at the flow monitor installation site.

2.1.4.1 Maximum Potential Velocity and Flow Rate

For this purpose, determine the span value of the flow monitor using the following procedure. Calculate the maximum potential velocity (MPV) using Equation A–3a or A–3b or determine the MPV (wet basis) from velocity traverse testing using Reference Method 2 (or its allowable alternatives) in appendix A to part 60 of this chapter. If using test values, use the highest average velocity (determined from the Method 2 traverses) measured at or near the maximum unit operating load (or, for units that do not produce electrical or thermal output, at the normal process operating conditions corresponding to the maximum stack gas flow rate). Express the MPV in units of wet standard feet per minute (fpm). For the purpose of providing substitute data during periods of missing flow rate data in accordance with §§75.31 and 75.33 and as required elsewhere in this part, calculate the maximum potential stack gas flow rate (MPF) in units of standard cubic feet per hour (scfh), as the product of the MPV (in units of wet, standard fpm) times 60, times the cross-sectional area of the stack or duct (in ft^2) at the flow monitor location.

$$MPV = \left(\frac{F_d H_f}{A}\right)\left(\frac{20.9}{20.9 - \%O_{2d}}\right)\left(\frac{100}{100 - \%H_2O}\right) \qquad \text{(Eq. A-3a)}$$

or

$$MPV = \left(\frac{F_c H_f}{A}\right)\left(\frac{100}{\%CO_{2d}}\right)\left(\frac{100}{100 - \%H_2O}\right) \qquad \text{(Eq. A-3b)}$$

Where:

MPV = maximum potential velocity (fpm, standard wet basis).

F_d = dry-basis F factor (dscf/mmBtu) from Table 1, Appendix F to this part.

F_c = carbon-based F factor (scf CO_2/mmBtu) from Table 1, Appendix F to this part.

Hf = maximum heat input (mmBtu/minute) for all units, combined, exhausting to the stack or duct where the flow monitor is located.

A = inside cross sectional area (ft^2) of the flue at the flow monitor location.

$\%O_{2d}$ = maximum oxygen concentration, percent dry basis, under normal operating conditions.

$\%CO_{2d}$ = minimum carbon dioxide concentration, percent dry basis, under normal operating conditions.

$\%H_2O$ = maximum percent flue gas moisture content under normal operating conditions.

2.1.4.2 Span Values and Range

Determine the span and range of the flow monitor as follows. Convert the MPV, as determined in section 2.1.4.1 of this appendix, to the same measurement units of flow rate that are used for daily calibration error tests (e.g., scfh, kscfh, kacfm, or differential pressure (inches of water)). Next, determine the ''calibration span value'' by multiplying the MPV (converted to equivalent daily calibration error units) by a factor no less than 1.00 and no greater than 1.25, and rounding up the result to at least two significant figures. For calibration span values in inches of water, retain at least two decimal places. Select appropriate reference signals for the daily calibration error tests as percentages of the calibration span value, as specified in section 2.2.2.1 of this appendix. Finally, calculate the ''flow rate span value'' (in scfh) as the product of the MPF, as determined in section 2.1.4.1 of this appendix, times the same factor (between 1.00 and 1.25) that was used to calculate the calibration span value. Round off the flow rate span value to the nearest 1000

scfh. Select the full-scale range of the flow monitor so that it is greater than or equal to the span value and is consistent with section 2.1 of this appendix. Include in the monitoring plan for the unit: calculations of the MPV, MPF, calibration span value, flow rate span value, and full-scale range (expressed both in scfh and, if different, in the measurement units of calibration).

2.1.4.3 Adjustment of Span and Range

For each affected unit or common stack, the owner or operator shall make a periodic evaluation of the MPV, MPF, span, and range values for each flow rate monitor (at a minimum, an annual evaluation is required) and shall make any necessary span and range adjustments with corresponding monitoring plan updates, as described in paragraphs (a) through (c) of this section 2.1.4.3. Span and range adjustments may be required, for example, as a result of changes in the fuel supply, changes in the stack or ductwork configuration, changes in the manner of operation of the unit, or installation or removal of emission controls. In implementing the provisions in paragraphs (a) and (b) of this section 2.1.4.3, note that flow rate data recorded during short-term, non-representative operating conditions (e.g., a trial burn of a different type of fuel) shall be excluded from consideration. The owner or operator shall keep the results of the most recent span and range evaluation on-site, in a format suitable for inspection. Make each required span or range adjustment no later than 45 days after the end of the quarter in which the need to adjust the span or range is identified.

(a) If the fuel supply, stack or ductwork configuration, operating parameters, or other conditions change such that the maximum potential flow rate changes significantly, adjust the span and range to assure the continued accuracy of the flow monitor. A ''significant'' change in the MPV or MPF means that the guidelines of section 2.1 of this appendix can no longer be met, as determined by either a periodic evaluation by the owner or operator or from the results of an audit by the Administrator. The owner or operator should evaluate whether any planned changes in operation of the unit may affect the flow of the unit or stack and should plan any necessary span and range changes needed to account for these changes, so that they are made in as timely a manner as practicable to coordinate with the operational changes. Calculate the adjusted calibration span and flow rate span values using the procedures in section 2.1.4.2 of this appendix.

(b) Whenever the full-scale range is exceeded during a quarter, provided that the exceedance is not caused by a monitor out-of-control period, report 200.0 percent of the current full-scale range as the hourly flow rate for each hour of the full-scale exceedance. If the range is exceeded, make appropriate adjustments to the MPF, flow rate span, and range to prevent future full-scale exceedances. Calculate the new calibration span value by converting the new flow rate span value from units of scfh to units of daily calibration. A calibration error test must be performed and passed to validate data on the new range.

(c) Whenever changes are made to the MPV, MPF, full-scale range, or span value of the flow monitor, as described in paragraphs (a) and (b) of this section, record and report (as applicable) the new full-scale range setting, calculations of the flow rate span value, calibration span value, MPV, and MPF in an updated monitoring plan for the unit. The monitoring plan update shall be made in the quarter in which the changes become effective. Record and report the adjusted calibration span and reference values as parts of the records for the calibration error test required by appendix B to this part. Whenever the calibration span value is adjusted, use reference values for the calibration error test that meet the requirements of section 2.2.2.1 of this appendix, based on the most recent adjusted calibration span value. Perform a calibration error test according to section 2.1.1 of appendix B to this part whenever making a change to the flow monitor span or range, unless the range change also triggers a recertification under §75.20(b).

2.1.5 Minimum Potential Moisture Percentage

Except as provided in section 2.1.6 of this appendix, the owner or operator of a unit that uses a continuous moisture monitoring system to correct emission rates and heat inputs from a dry basis to a wet basis (or vice-versa) shall, for the purpose of providing substitute data under §75.37, use a default value of 3.0 percent H_2O as the minimum potential moisture percentage. Alternatively, the minimum potential moisture percentage may be based upon 720 hours or more of quality-assured CEM data, representing the full operating load range of the unit(s). If this option is chosen, the minimum potential moisture percentage shall be the lowest quality-assured hourly average H_2O concentration recorded in the 720 (or more) hours of data used for the determination.

2.1.6 Maximum Potential Moisture Percentage

When Equation 19–3, 19–4 or 19–8 in Method 19 in appendix A to part 60 of this chapter is used to determine NO_X emission rate, the owner or operator of a unit that uses a continuous moisture monitoring system shall, for the purpose of providing substitute data

under §75.37, determine the maximum potential moisture percentage. The maximum potential moisture percentage shall be based upon 720 hours or more of quality-assured CEM data, representing the full operating load range of the unit(s). The maximum potential moisture percentage shall be the highest quality-assured hourly average H_2O concentration recorded in the 720 (or more) hours of data used for the determination. Alternatively, a default maximum potential moisture value of 15.0 percent H_2O may be used.

2.1.7 Hg Monitors

Determine the appropriate span and range value(s) for each Hg pollutant concentration monitor, so that all expected Hg concentrations can be determined accurately.

2.1.7.1 Maximum Potential Concentration

(a) The maximum potential concentration depends upon the type of coal combusted in the unit. For the initial MPC determination, there are three options:

(1) Use one of the following default values: 9 μgm/scm for bituminous coal; 10 μgm/scm for sub-bituminous coal; 16 μgm/scm for lignite, and 1 μgm/scm for waste coal, *i.e.*, anthracite culm or bituminous gob. If different coals are blended, use the highest MPC for any fuel in the blend; or

(2) You may base the MPC on the results of site-specific emission testing using the one of the Hg reference methods in §75.22, if the unit does not have add-on Hg emission controls or a flue gas desulfurization system, or if you test upstream of these control devices. A minimum of 3 test runs are required, at the normal operating load. Use the highest total Hg concentration obtained in any of the tests as the MPC; or

(3) You may base the MPC on 720 or more hours of historical CEMS data or data from a sorbent trap monitoring system, if the unit does not have add-on Hg emission controls or a flue gas desulfurization system (or if the CEMS or sorbent trap system is located upstream of these control devices) and if the Hg CEMS or sorbent trap system has been tested for relative accuracy against one of the Hg reference methods in §75.22 and has met a relative accuracy specification of 20.0% or less.

(b) For the purposes of missing data substitution, the fuel-specific or site-specific MPC values defined in paragraph (a) of this section apply to units using sorbent trap monitoring systems.

2.1.7.2 Maximum Expected Concentration

For units with FGD systems that significantly reduce Hg emissions (including fluidized bed units that use limestone injection) and for units equipped with add-on Hg emission controls (*e.g.*, carbon injection), determine the maximum expected Hg concentration (MEC) during normal, stable operation of the unit and emission controls. To calculate the MEC, substitute the MPC value from section 2.1.7.1 of this appendix into Equation A–2 in section 2.1.1.2 of this appendix. For units with add-on Hg emission controls, base the percent removal efficiency on design engineering calculations. For units with FGD systems, use the best available estimate of the Hg removal efficiency of the FGD system.

2.1.7.3 Span and Range Value(s)

(a) For each Hg monitor, determine a high span value, by rounding the MPC value from section 2.1.7.1 of this appendix upward to the next highest multiple of 10 μgm/scm.

(b) For an affected unit equipped with an FGD system or a unit with add-on Hg emission controls, if the MEC value from section 2.1.7.2 of this appendix is less than 20 percent of the high span value from paragraph (a) of this section, and if the high span value is 20 μgm/scm or greater, define a second, low span value of 10 μgm/scm.

(c) If only a high span value is required, set the full-scale range of the Hg analyzer to be greater than or equal to the span value.

(d) If two span values are required, you may either:

(1) Use two separate (high and low) measurement scales, setting the range of each scale to be greater than or equal to the high or low span value, as appropriate; or

(2) Quality-assure two segments of a single measurement scale.

2.1.7.4 Adjustment of Span and Range

For each affected unit or common stack, the owner or operator shall make a periodic evaluation of the MPC, MEC, span, and range values for each Hg monitor (at a minimum, an annual evaluation is required) and shall make any necessary span and range adjustments, with corresponding monitoring plan updates. Span and range adjustments may be required, for example, as a result of changes in the fuel supply, changes in the manner of operation of the unit, or installation or removal of emission controls. In implementing the provisions in paragraphs (a) and (b) of this section, data recorded during short-term, non-representative process operating conditions (*e.g.*, a trial burn of a different type of fuel) shall be excluded from consideration. The owner or operator shall keep the results of the most recent span and range evaluation on-site, in a format suitable for inspection. Make each required span or range adjustment no later than 45 days after the end of the quarter in which the need to adjust the span or range is identified, except

that up to 90 days after the end of that quarter may be taken to implement a span adjustment if the calibration gas concentrations currently being used for calibration error tests, system integrity checks, and linearity checks are unsuitable for use with the new span value and new calibration materials must be ordered.

(a) The guidelines of section 2.1 of this appendix do not apply to Hg monitoring systems.

(b) Whenever a full-scale range exceedance occurs during a quarter and is not caused by a monitor out-of-control period, proceed as follows:

(1) For monitors with a single measurement scale, report 200 percent of the full-scale range as the hourly Hg concentration until the readings come back on-scale and if appropriate, make adjustments to the MPC, span, and range to prevent future full-scale exceedances; or

(2) For units with two separate measurement scales, if the low range is exceeded, no further action is required, provided that the high range is available and is not out-of-control or out-of-service for any reason. However, if the high range is not able to provide quality assured data at the time of the low range exceedance or at any time during the continuation of the exceedance, report the MPC until the readings return to the low range or until the high range is able to provide quality assured data (unless the reason that the high-scale range is not able to provide quality assured data is because the high-scale range has been exceeded; if the high-scale range is exceeded follow the procedures in paragraph (b)(1) of this section).

(c) Whenever changes are made to the MPC, MEC, full-scale range, or span value of the Hg monitor, record and report (as applicable) the new full-scale range setting, the new MPC or MEC and calculations of the adjusted span value in an updated monitoring plan. The monitoring plan update shall be made in the quarter in which the changes become effective. In addition, record and report the adjusted span as part of the records for the daily calibration error test and linearity check specified by appendix B to this part. Whenever the span value is adjusted, use calibration gas concentrations that meet the requirements of section 5.1 of this appendix, based on the adjusted span value. When a span adjustment is so significant that the calibration gas concentrations currently being used for calibration error tests, system integrity checks and linearity checks are unsuitable for use with the new span value, then a diagnostic linearity or 3-level system integrity check using the new calibration gas concentrations must be performed and passed. Use the data validation procedures in §75.20(b)(3), beginning with the hour in which the span is changed.

2.2 Design for Quality Control Testing

2.2.1 Pollutant Concentration and CO_2 or O_2 Monitors

(a) Design and equip each pollutant concentration and CO_2 or O_2 monitor with a calibration gas injection port that allows a check of the entire measurement system when calibration gases are introduced. For extractive and dilution type monitors, all monitoring components exposed to the sample gas, (e.g., sample lines, filters, scrubbers, conditioners, and as much of the probe as practicable) are included in the measurement system. For in situ type monitors, the calibration must check against the injected gas for the performance of all active electronic and optical components (e.g. transmitter, receiver, analyzer).

(b) Design and equip each pollutant concentration or CO_2 or O_2 monitor to allow daily determinations of calibration error (positive or negative) at the zero- and mid-or high-level concentrations specified in section 5.2 of this appendix.

2.2.2 Flow Monitors

Design all flow monitors to meet the applicable performance specifications.

2.2.2.1 Calibration Error Test

Design and equip each flow monitor to allow for a daily calibration error test consisting of at least two reference values: Zero to 20 percent of span or an equivalent reference value (*e.g.*, pressure pulse or electronic signal) and 50 to 70 percent of span. Flow monitor response, both before and after any adjustment, must be capable of being recorded by the data acquisition and handling system. Design each flow monitor to allow a daily calibration error test of the entire flow monitoring system, from and including the probe tip (or equivalent) through and including the data acquisition and handling system, or the flow monitoring system from and including the transducer through and including the data acquisition and handling system.

2.2.2.2 Interference Check

(a) Design and equip each flow monitor with a means to ensure that the moisture expected to occur at the monitoring location does not interfere with the proper functioning of the flow monitoring system. Design and equip each flow monitor with a means to detect, on at least a daily basis, pluggage of each sample line and sensing port, and malfunction of each resistance temperature detector (RTD), transceiver or equivalent.

(b) Design and equip each differential pressure flow monitor to provide an automatic, periodic back purging (simultaneously on both sides of the probe) or equivalent method

of sufficient force and frequency to keep the probe and lines sufficiently free of obstructions on at least a daily basis to prevent velocity sensing interference, and a means for detecting leaks in the system on at least a quarterly basis (manual check is acceptable).

(c) Design and equip each thermal flow monitor with a means to ensure on at least a daily basis that the probe remains sufficiently clean to prevent velocity sensing interference.

(d) Design and equip each ultrasonic flow monitor with a means to ensure on at least a daily basis that the transceivers remain sufficiently clean (*e.g.*, backpurging system) to prevent velocity sensing interference.

2.2.3 Mercury Monitors.

Design and equip each mercury monitor to permit the introduction of known concentrations of elemental Hg and $HgCl_2$ separately, at a point immediately preceding the sample extraction filtration system, such that the entire measurement system can be checked. If the Hg monitor does not have a converter, the $HgCl_2$ injection capability is not required.

3. Performance Specifications

3.1 Calibration Error

(a) The calibration error performance specifications in this section apply only to 7-day calibration error tests under sections 6.3.1 and 6.3.2 of this appendix and to the offline calibration demonstration described in section 2.1.1.2 of appendix B to this part. The calibration error limits for daily operation of the continuous monitoring systems required under this part are found in section 2.1.4(a) of appendix B to this part.

(b) The calibration error of SO_2 and NO_X pollutant concentration monitors shall not deviate from the reference value of either the zero or upscale calibration gas by more than 2.5 percent of the span of the instrument, as calculated using Equation A–5 of this appendix. Alternatively, where the span value is less than 200 ppm, calibration error test results are also acceptable if the absolute value of the difference between the monitor response value and the reference value, $|R-A|$ in Equation A–5 of this appendix, is ≤5 ppm. The calibration error of CO_2 or O_2 monitors (including O_2 monitors used to measure CO_2 emissions or percent moisture) shall not deviate from the reference value of the zero or upscale calibration gas by >0.5 percent O_2 or CO_2, as calculated using the term $|R-A|$ in the numerator of Equation A–5 of this appendix. The calibration error of flow monitors shall not exceed 3.0 percent of the calibration span value of the instrument, as calculated using Equation A–6 of this appendix. For differential pressure-type flow monitors, the calibration error test results are also acceptable if $|R-A|$, the absolute value of the difference between the monitor response and the reference value in Equation A–6, does not exceed 0.01 inches of water.

(c) The calibration error of a Hg concentration monitor shall not deviate from the reference value of either the zero or upscale calibration gas by more than 5.0 percent of the span value, as calculated using Equation A–5 of this appendix. Alternatively, if the span value is 10 μgm/scm, the calibration error test results are also acceptable if the absolute value of the difference between the monitor response value and the reference value, $|R–A|$ in Equation A–5 of this appendix, is ≤ 1.0 μgm/scm.

3.2 Linearity Check

For SO_2 and NO_X pollutant concentration monitors, the error in linearity for each calibration gas concentration (low-, mid-, and high-levels) shall not exceed or deviate from the reference value by more than 5.0 percent (as calculated using equation A–4 of this appendix). Linearity check results are also acceptable if the absolute value of the difference between the average of the monitor response values and the average of the reference values, $|R-A|$ in equation A–4 of this appendix, is less than or equal to 5 ppm. For CO_2 or O_2 monitors (including O_2 monitors used to measure CO_2 emissions or percent moisture):

(1) The error in linearity for each calibration gas concentration (low-, mid-, and high-levels) shall not exceed or deviate from the reference value by more than 5.0 percent as calculated using equation A–4 of this appendix; or

(2) The absolute value of the difference between the average of the monitor response values and the average of the reference values, $|R-A|$ in equation A–4 of this appendix, shall be less than or equal to 0.5 percent CO_2 or O_2, whichever is less restrictive.

(3) For the linearity check and the 3-level system integrity check of an Hg monitor, which are required, respectively, under §75.20(c)(1)(ii) and (c)(1)(vi), the measurement error shall not exceed 10.0 percent of the reference value at any of the three gas levels. To calculate the measurement error at each level, take the absolute value of the difference between the reference value and mean CEM response, divide the result by the reference value, and then multiply by 100. Alternatively, the results at any gas level are acceptable if the absolute value of the difference between the average monitor response and the average reference value, *i.e.*, $|R-A|$ in Equation A–4 of this appendix, does not exceed 0.8 μg/m³. The principal and alternative performance specifications in this section also apply to the single-level system integrity check described in section 2.6 of appendix B to this part.

3.3 Relative Accuracy

3.3.1 Relative Accuracy for SO_2 Monitors

(a) The relative accuracy for SO_2 pollutant concentration monitors shall not exceed 10.0 percent except as provided in this section.

(b) For affected units where the average of the reference method measurements of SO_2 concentration during the relative accuracy test audit is less than or equal to 250.0 ppm, the difference between the mean value of the monitor measurements and the reference method mean value shall not exceed ±15.0 ppm, wherever the relative accuracy specification of 10.0 percent is not achieved.

3.3.2 Relative Accuracy for NO_X-Diluent Continuous Emission Monitoring Systems

(a) The relative accuracy for NO_X-diluent continuous emission monitoring systems shall not exceed 10.0 percent.

(b) For affected units where the average of the reference method measurements of NO_X emission rate during the relative accuracy test audit is less than or equal to 0.200 lb/mmBtu, the difference between the mean value of the continuous emission monitoring system measurements and the reference method mean value shall not exceed ±0.020 lb/mmBtu, wherever the relative accuracy specification of 10.0 percent is not achieved.

3.3.3 Relative Accuracy for CO_2 and O_2 Monitors

The relative accuracy for CO_2 and O_2 monitors shall not exceed 10.0 percent. The relative accuracy test results are also acceptable if the difference between the mean value of the CO_2 or O_2 monitor measurements and the corresponding reference method measurement mean value, calculated using equation A–7 of this appendix, does not exceed ±1.0 percent CO_2 or O_2.

3.3.4 Relative Accuracy for Flow Monitors

(a) The relative accuracy of flow monitors shall not exceed 10.0 percent at any load (or operating) level at which a RATA is performed (i.e., the low, mid, or high level, as defined in section 6.5.2.1 of this appendix).

(b) For affected units where the average of the flow reference method measurements of gas velocity at a particular load (or operating) level of the relative accuracy test audit is less than or equal to 10.0 fps, the difference between the mean value of the flow monitor velocity measurements and the reference method mean value in fps at that level shall not exceed ±2.0 fps, wherever the 10.0 percent relative accuracy specification is not achieved.

3.3.5 Combined SO_2/Flow Monitoring System [Reserved]

3.3.6 Relative Accuracy for Moisture Monitoring Systems

The relative accuracy of a moisture monitoring system shall not exceed 10.0 percent. The relative accuracy test results are also acceptable if the difference between the mean value of the reference method measurements (in percent H_2O) and the corresponding mean value of the moisture monitoring system measurements (in percent H_2O), calculated using Equation A–7 of this appendix does not exceed ±1.5 percent H_2O.

3.3.7 Relative Accuracy for NO_X Concentration Monitoring Systems

(a) The following requirement applies only to NO_X concentration monitoring systems (i.e., NO_X pollutant concentration monitors) that are used to determine NO_X mass emissions, where the owner or operator elects to monitor and report NO_X mass emissions using a NO_X concentration monitoring system and a flow monitoring system.

(b) The relative accuracy for NO_X concentration monitoring systems shall not exceed 10.0 percent. Alternatively, for affected units where the average of the reference method measurements of NO_X concentration during the relative accuracy test audit is less than or equal to 250.0 ppm, the difference between the mean value of the continuous emission monitoring system measurements and the reference method mean value shall not exceed ±15.0 ppm, wherever the 10.0 percent relative accuracy specification is not achieved.

3.3.8 *Relative Accuracy for Hg Monitoring Systems*

The relative accuracy of a Hg concentration monitoring system or a sorbent trap monitoring system shall not exceed 20.0 percent. Alternatively, for affected units where the average of the reference method measurements of Hg concentration during the relative accuracy test audit is less than 5.0 μgm/scm, the test results are acceptable if the difference between the mean value of the monitor measurements and the reference method mean value does not exceed 1.0 μgm/scm, in cases where the relative accuracy specification of 20.0 percent is not achieved.

3.4 Bias

3.4.1 SO_2 Pollutant Concentration Monitors, NO_X Concentration Monitoring Systems and NO_X-Diluent Continuous Emission Monitoring Systems

SO_2 pollutant concentration monitors, NO_X-diluent continuous emission monitoring systems and NO_X concentration monitoring

systems used to determine NO_X mass emissions, as defined in §75.71(a)(2), shall not be biased low as determined by the test procedure in section 7.6 of this appendix. The bias specification applies to all SO_2 pollutant concentration monitors and to all NO_X concentration monitoring systems, including those measuring an average SO_2 or NO_X concentration of 250.0 ppm or less, and to all NO_X-diluent continuous emission monitoring systems, including those measuring an average NO_X emission rate of 0.200 lb/mmBtu or less.

3.4.2 Flow Monitors

Flow monitors shall not be biased low as determined by the test procedure in section 7.6 of this appendix. The bias specification applies to all flow monitors including those measuring an average gas velocity of 10.0 fps or less.

3.4.3 *Hg Monitoring Systems*

Mercury concentration monitoring systems and sorbent trap monitoring systems shall not be biased low as determined by the test procedure in section 7.6 of this appendix.

3.5 Cycle Time

The cycle time for pollutant concentration monitors, oxygen monitors used to determine percent moisture, and any other monitoring component of a continuous emission monitoring system that is required to perform a cycle time test shall not exceed 15 minutes.

4. DATA ACQUISITION AND HANDLING SYSTEMS

Automated data acquisition and handling systems shall read and record the full range of pollutant concentrations and volumetric flow from zero through span and provide a continuous, permanent record of all measurements and required information as an ASCII flat file capable of transmission both by direct computer-to-computer electronic transfer via modem and EPA-provided software and by an IBM-compatible personal computer diskette. These systems also shall have the capability of interpreting and converting the individual output signals from an SO_2 pollutant concentration monitor, a flow monitor, a CO_2 monitor, an O_2 monitor, a NO_X pollutant concentration monitor, a NO_X-diluent CEMS, a moisture monitoring system, a Hg concentration monitoring system, and a sorbent trap monitoring system, to produce a continuous readout of pollutant emission rates or pollutant mass emissions (as applicable) in the appropriate units (*e.g.*, lb/hr, lb/MMBtu, ounces/hr, tons/hr).

Data acquisition and handling systems shall also compute and record monitor calibration error; any bias adjustments to SO_2, NO_X, and Hg pollutant concentration data, flow rate data, Hg emission rate data, or NO_X emission rate data; and all missing data procedure statistics specified in subpart D of this part.

For an excepted monitoring system under appendix D or E of this part, data acquisition and handling systems shall:

(1) Read and record the full range of fuel flowrate through the upper range value;

(2) Calculate and record intermediate values necessary to obtain emissions, such as mass fuel flowrate and heat input rate;

(3) Calculate and record emissions in the appropriate units (e.g., lb/hr of SO_2, lb/mmBtu of NO_X);

(4) Predict and record NO_X emission rate using the heat input rate and the NO_X/heat input correlation developed under appendix E of this part;

(5) Calculate and record all missing data substitution values specified in appendix D or E of this part; and

(6) Provide a continuous, permanent record of all measurements and required information as an ASCII flat file capable of transmission both by direct computer-to-computer electronic transfer via modem and EPA-provided software and by an IBM-compatible personal computer diskette.

5. CALIBRATION GAS

5.1 Reference Gases

For the purposes of part 75, calibration gases include the following:

5.1.1 Standard Reference Materials (SRM)

These calibration gases may be obtained from the National Institute of Standards and Technology (NIST) at the following address: Quince Orchard and Cloppers Road, Gaithersburg, MD 20899–0001.

5.1.2 SRM-Equivalent Compressed Gas Primary Reference Material (PRM)

Contact the Gas Metrology Team, Analytical Chemistry Division, Chemical Science and Technology Laboratory of NIST, at the address in section 5.1.1, for a list of vendors and cylinder gases.

5.1.3 NIST Traceable Reference Materials

Contact the Gas Metrology Team, Analytical Chemistry Division, Chemical Science and Technology Laboratory of NIST, at the address in section 5.1.1, for a list of vendors and cylinder gases that meet the definition for a NIST Traceable Reference Material (NTRM) provided in §72.2.

5.1.4 EPA Protocol Gases

(a) An EPA Protocol Gas is a calibration gas mixture prepared and analyzed according to Section 2 of the ''EPA Traceability Protocol for Assay and Certification of Gaseous Calibration Standards,'' September 1997, EPA–600/R–97/121 or such revised procedure as

approved by the Administrator (EPA Traceability Protocol).

(b) An EPA Protocol Gas must have a specialty gas producer-certified uncertainty (95-percent confidence interval) that must not be greater than 2.0 percent of the certified concentration (tag value) of the gas mixture. The uncertainty must be calculated using the statistical procedures (or equivalent statistical techniques) that are listed in Section 2.1.8 of the EPA Traceability Protocol.

(c) On and after January 1, 2009, a specialty gas producer advertising calibration gas certification with the EPA Traceability Protocol or distributing calibration gases as ''EPA Protocol Gas'' must participate in the EPA Protocol Gas Verification Program (PGVP) described in Section 2.1.10 of the EPA Traceability Protocol or it cannot use ''EPA'' in any form of advertising for these products, unless approved by the Administrator. A specialty gas producer not participating in the PGVP may not certify a calibration gas as an EPA Protocol Gas, unless approved by the Administrator.

(d) A copy of EPA–600/R–97/121 is available from the National Technical Information Service, 5285 Port Royal Road, Springfield, VA, 703–605–6585 or *http://www.ntis.gov,* and from *http://www.epa.gov/ttn/emc/news.html* or *http://www.epa.gov/appcdwww/tsb/index.html.*

5.1.5 Research Gas Mixtures

Research gas mixtures must be vendor-certified to be within 2.0 percent of the concentration specified on the cylinder label (tag value), using the uncertainty calculation procedure in section 2.1.8 of the ''EPA Traceability Protocol for Assay and Certification of Gaseous Calibration Standards,'' September 1997, EPA–600/R–97/121. Inquiries about the RGM program should be directed to: National Institute of Standards and Technology, Analytical Chemistry Division, Chemical Science and Technology Laboratory, B–324 Chemistry, Gaithersburg, MD 20899.

5.1.6 Zero Air Material

Zero air material is defined in §72.2 of this chapter.

5.1.7 NIST/EPA-Approved Certified Reference Materials

Existing certified reference materials (CRMs) that are still within their certification period may be used as calibration gas.

5.1.8 Gas Manufacturer's Intermediate Standards

Gas manufacturer's intermediate standards is defined in §72.2 of this chapter.

5.1.9 Mercury Standards.

For 7-day calibration error tests of Hg concentration monitors and for daily calibration error tests of Hg monitors, either NIST-traceable elemental Hg standards (as defined in §72.2 of this chapter) or a NIST-traceable source of oxidized Hg (as defined in §72.2 of this chapter) may be used. For linearity checks, NIST-traceable elemental Hg standards shall be used. For 3-level and single-point system integrity checks under §75.20(c)(1)(vi), sections 6.2(g) and 6.3.1 of this appendix, and sections 2.1.1, 2.2.1 and 2.6 of appendix B to this part, a NIST-traceable source of oxidized Hg shall be used. Alternatively, other NIST-traceable standards may be used for the required checks, subject to the approval of the Administrator. Notwithstanding these requirements, Hg calibration standards that are not NIST-traceable may be used for the tests described in this section until December 31, 2009. However, on and after January 1, 2010, only NIST-traceable calibration standards shall be used for these tests.

5.2 Concentrations

Four concentration levels are required as follows.

5.2.1 Zero-level Concentration

0.0 to 20.0 percent of span, including span for high-scale or both low- and high-scale for SO_2, NO_X, CO_2, and O_2 monitors, as appropriate.

5.2.2 Low-level Concentration

20.0 to 30.0 percent of span, including span for high-scale or both low- and high-scale for SO_2, NO_X, CO_2, and O_2 monitors, as appropriate.

5.2.3 Mid-level Concentration

50.0 to 60.0 percent of span, including span for high-scale or both low- and high-scale for SO_2, NO_X, CO_2, and O_2 monitors, as appropriate.

5.2.4 High-level Concentration

80.0 to 100.0 percent of span, including span for high-scale or both low-and high-scale for SO_2, NO_X, CO_2, and O_2 monitors, as appropriate.

6. Certification Tests and Procedures

6.1 General Requirements

6.1.1 Pretest Preparation

Install the components of the continuous emission monitoring system (i.e., pollutant concentration monitors, CO_2 or O_2 monitor, and flow monitor) as specified in sections 1, 2, and 3 of this appendix, and prepare each system component and the combined system for operation in accordance with the manufacturer's written instructions. Operate the unit(s) during each period when measurements are made. Units may be tested on non-

consecutive days. To the extent practicable, test the DAHS software prior to testing the monitoring hardware.

6.1.2 *Requirements for Air Emission Testing Bodies*

(a) On and after January 1, 2009, any Air Emission Testing Body (AETB) conducting relative accuracy test audits of CEMS and sorbent trap monitoring systems under this part must conform to the requirements of ASTM D7036–04 (incorporated by reference under §75.6 of this part). This section is not applicable to daily operation, daily calibration error checks, daily flow interference checks, quarterly linearity checks or routine maintenance of CEMS.

(b) The AETB shall provide to the affected source(s) certification that the AETB operates in conformance with, and that data submitted to the Agency has been collected in accordance with, the requirements of ASTM D7036–04 (incorporated by reference under §75.6 of this part). This certification may be provided in the form of:

(1) A certificate of accreditation of relevant scope issued by a recognized, national accreditation body; or

(2) A letter of certification signed by a member of the senior management staff of the AETB.

(c) The AETB shall either provide a Qualified Individual on-site to conduct or shall oversee all relative accuracy testing carried out by the AETB as required in ASTM D7036–04 (incorporated by reference under §75.6 of this part). The Qualified Individual shall provide the affected source(s) with copies of the qualification credentials relevant to the scope of the testing conducted.

6.2 Linearity Check (General Procedures)

Check the linearity of each SO_2, NO_X, CO_2, Hg, and O_2 monitor while the unit, or group of units for a common stack, is combusting fuel at conditions of typical stack temperature and pressure; it is not necessary for the unit to be generating electricity during this test. Notwithstanding these requirements, if the SO_2 or NO_X span value for a particular monitor range is ≤ 30 ppm, that range is exempted from the linearity check requirements of this part, for initial certification, recertification, and for on-going quality-assurance. For units with two measurement ranges (high and low) for a particular parameter, perform a linearity check on both the low scale (except for SO_2 or NO_X span values ≤ 30 ppm) and the high scale. Note that for a NO_X-diluent monitoring system with two NO_X measurement ranges, if the low NO_X scale has a span value ≤ 30 ppm and is exempt from linearity checks, this does not exempt either the diluent monitor or the high NO_X scale (if the span is > 30 ppm) from linearity check requirements. For on-going quality assurance of the CEMS, perform linearity checks, using the procedures in this section, on the range(s) and at the frequency specified in section 2.2.1 of appendix B to this part. Challenge each monitor with calibration gas, as defined in section 5.1 of this appendix, at the low-, mid-, and high-range concentrations specified in section 5.2 of this appendix. Introduce the calibration gas at the gas injection port, as specified in section 2.2.1 of this appendix. Operate each monitor at its normal operating temperature and conditions. For extractive and dilution type monitors, pass the calibration gas through all filters, scrubbers, conditioners, and other monitor components used during normal sampling and through as much of the sampling probe as is practical. For in-situ type monitors, perform calibration checking all active electronic and optical components, including the transmitter, receiver, and analyzer. Challenge the monitor three times with each reference gas (see example data sheet in Figure 1). Do not use the same gas twice in succession. To the extent practicable, the duration of each linearity test, from the hour of the first injection to the hour of the last injection, shall not exceed 24 unit operating hours. Record the monitor response from the data acquisition and handling system. For each concentration, use the average of the responses to determine the error in linearity using Equation A–4 in this appendix. Linearity checks are acceptable for monitor or monitoring system certification, recertification, or quality assurance if none of the test results exceed the applicable performance specifications in section 3.2 of this appendix. The status of emission data from a CEMS prior to and during a linearity test period shall be determined as follows:

(a) For the initial certification of a CEMS, data from the monitoring system are considered invalid until all certification tests, including the linearity test, have been successfully completed, unless the conditional data validation procedures in §75.20(b)(3) are used. When the procedures in §75.20(b)(3) are followed, the words ''initial certification'' apply instead of ''recertification,'' and complete all of the initial certification tests by the applicable deadline in §75.4, rather than within the time periods specified in §75.20(b)(3)(iv) for the individual tests.

(b) For the routine quality assurance linearity checks required by section 2.2.1 of appendix B to this part, use the data validation procedures in section 2.2.3 of appendix B to this part.

(c) When a linearity test is required as a diagnostic test or for recertification, use the data validation procedures in §75.20(b)(3).

(d) For linearity tests of non-redundant backup monitoring systems, use the data validation procedures in §75.20(d)(2)(iii).

(e) For linearity tests performed during a grace period and after the expiration of a grace period, use the data validation procedures in sections 2.2.3 and 2.2.4, respectively, of appendix B to this part.

(f) For all other linearity checks, use the data validation procedures in section 2.2.3 of appendix B to this part.

(g) For Hg monitors, follow the guidelines in section 2.2.3 of this appendix in addition to the applicable procedures in section 6.2 when performing the system integrity checks described in §75.20(c)(1)(vi) and in sections 2.1.1, 2.2.1 and 2.6 of appendix B to this part.

(h) For Hg concentration monitors, if moisture is added to the calibration gas during the required linearity checks or system integrity checks, the moisture content of the calibration gas must be accounted for. Under these circumstances, the dry basis concentration of the calibration gas shall be used to calculate the linearity error or measurement error (as applicable).

6.3 7-Day Calibration Error Test

6.3.1 Gas Monitor 7-day Calibration Error Test

The following monitors and ranges are exempted from the 7-day calibration error test requirements of this part: The SO_2, NO_X, CO_2 and O_2 monitors installed on peaking units (as defined in §72.2 of this chapter); and any SO_2 or NO_X measurement range with a span value of 50 ppm or less. In all other cases, measure the calibration error of each SO_2 monitor, each NO_X monitor, each Hg concentration monitor, and each CO_2 or O_2 monitor while the unit is combusting fuel (but not necessarily generating electricity) once each day for 7 consecutive operating days according to the following procedures. For Hg monitors, you may perform this test using either elemental Hg standards or a NIST-traceable source of oxidized Hg. Also for Hg monitors, if moisture is added to the calibration gas, the added moisture must be accounted for and the dry-basis concentration of the calibration gas shall be used to calculate the calibration error. (In the event that unit outages occur after the commencement of the test, the 7 consecutive unit operating days need not be 7 consecutive calendar days.) Units using dual span monitors must perform the calibration error test on both high- and low-scales of the pollutant concentration monitor. The calibration error test procedures in this section and in section 6.3.2 of this appendix shall also be used to perform the daily assessments and additional calibration error tests required under sections 2.1.1 and 2.1.3 of appendix B to this part. Do not make manual or automatic adjustments to the monitor settings until after taking measurements at both zero and high concentration levels for that day during the 7-day test. If automatic adjustments are made following both injections, conduct the calibration error test such that the magnitude of the adjustments can be determined and recorded. Record and report test results for each day using the unadjusted concentration measured in the calibration error test prior to making any manual or automatic adjustments (i.e., resetting the calibration). The calibration error tests should be approximately 24 hours apart, (unless the 7-day test is performed over non-consecutive days). Perform calibration error tests at both the zero-level concentration and high-level concentration, as specified in section 5.2 of this appendix. Alternatively, a mid-level concentration gas (50.0 to 60.0 percent of the span value) may be used in lieu of the high-level gas, provided that the mid-level gas is more representative of the actual stack gas concentrations. In addition, repeat the procedure for SO_2 and NO_X pollutant concentration monitors using the low-scale for units equipped with emission controls or other units with dual span monitors. Use only calibration gas, as specified in section 5.1 of this appendix. Introduce the calibration gas at the gas injection port, as specified in section 2.2.1 of this appendix. Operate each monitor in its normal sampling mode. For extractive and dilution type monitors, pass the calibration gas through all filters, scrubbers, conditioners, and other monitor components used during normal sampling and through as much of the sampling probe as is practical. For in-situ type monitors, perform calibration, checking all active electronic and optical components, including the transmitter, receiver, and analyzer. Challenge the pollutant concentration monitors and CO_2 or O_2 monitors once with each calibration gas. Record the monitor response from the data acquisition and handling system. Using Equation A–5 of this appendix, determine the calibration error at each concentration once each day (at approximately 24-hour intervals) for 7 consecutive days according to the procedures given in this section. The results of a 7-day calibration error test are acceptable for monitor or monitoring system certification, recertification or diagnostic testing if none of these daily calibration error test results exceed the applicable performance specifications in section 3.1 of this appendix. The status of emission data from a gas monitor prior to and during a 7-day calibration error test period shall be determined as follows:

(a) For initial certification, data from the monitor are considered invalid until all certification tests, including the 7-day calibration error test, have been successfully completed, unless the conditional data validation procedures in §75.20(b)(3) are used. When the procedures in §75.20(b)(3) are followed, the words ''initial certification'' apply instead of ''recertification,'' and complete all

of the initial certification tests by the applicable deadline in §75.4, rather than within the time periods specified in §75.20(b)(3)(iv) for the individual tests.

(b) When a 7-day calibration error test is required as a diagnostic test or for recertification, use the data validation procedures in §75.20(b)(3).

6.3.2 Flow Monitor 7-day Calibration Error Test

Flow monitors installed on peaking units (as defined in §72.2 of this chapter) are exempted from the 7-day calibration error test requirements of this part. In all other cases, perform the 7-day calibration error test of a flow monitor, when required for certification, recertification or diagnostic testing, according to the following procedures. Introduce the reference signal corresponding to the values specified in section 2.2.2.1 of this appendix to the probe tip (or equivalent), or to the transducer. During the 7-day certification test period, conduct the calibration error test while the unit is operating once each unit operating day (as close to 24-hour intervals as practicable). In the event that unit outages occur after the commencement of the test, the 7 consecutive operating days need not be 7 consecutive calendar days. Record the flow monitor responses by means of the data acquisition and handling system. Calculate the calibration error using Equation A–6 of this appendix. Do not perform any corrective maintenance, repair, or replacement upon the flow monitor during the 7-day test period other than that required in the quality assurance/quality control plan required by appendix B to this part. Do not make adjustments between the zero and high reference level measurements on any day during the 7-day test. If the flow monitor operates within the calibration error performance specification (i.e., less than or equal to 3.0 percent error each day and requiring no corrective maintenance, repair, or replacement during the 7-day test period), the flow monitor passes the calibration error test. Record all maintenance activities and the magnitude of any adjustments. Record output readings from the data acquisition and handling system before and after all adjustments. Record and report all calibration error test results using the unadjusted flow rate measured in the calibration error test prior to resetting the calibration. Record all adjustments made during the 7-day period at the time the adjustment is made, and report them in the certification or recertification application. The status of emissions data from a flow monitor prior to and during a 7-day calibration error test period shall be determined as follows:

(a) For initial certification, data from the monitor are considered invalid until all certification tests, including the 7-day calibration error test, have been successfully completed, unless the conditional data validation procedures in §75.20(b)(3) are used. When the procedures in §75.20(b)(3) are followed, the words ''initial certification'' apply instead of ''recertification,'' and complete all of the initial certification tests by the applicable deadline in §75.4, rather than within the time periods specified in §75.20(b)(3)(iv) for the individual tests.

(b) When a 7-day calibration error test is required as a diagnostic test or for recertification, use the data validation procedures in §75.20(b)(3).

6.3.3 For gas or flow monitors installed on peaking units, the exemption from performing the 7-day calibration error test applies as long as the unit continues to meet the definition of a peaking unit in §72.2 of this chapter. However, if at the end of a particular calendar year or ozone season, it is determined that peaking unit status has been lost, the owner or operator shall perform a diagnostic 7-day calibration error test of each monitor installed on the unit, by no later than December 31 of the following calendar year.

6.4 Cycle Time Test

Perform cycle time tests for each pollutant concentration monitor and continuous emission monitoring system while the unit is operating, according to the following procedures. Use a zero-level and a high-level calibration gas (as defined in section 5.2 of this appendix) alternately. For Hg monitors, the calibration gas used for this test may either be the elemental or oxidized form of Hg. To determine the downscale cycle time, measure the concentration of the flue gas emissions until the response stabilizes. Record the stable emissions value. Inject a zero-level concentration calibration gas into the probe tip (or injection port leading to the calibration cell, for in situ systems with no probe). Record the time of the zero gas injection, using the data acquisition and handling system (DAHS). Next, allow the monitor to measure the concentration of the zero gas until the response stabilizes. Record the stable ending calibration gas reading. Determine the downscale cycle time as the time it takes for 95.0 percent of the step change to be achieved between the stable stack emissions value and the stable ending zero gas reading. Then repeat the procedure, starting with stable stack emissions and injecting the high-level gas, to determine the upscale cycle time, which is the time it takes for 95.0 percent of the step change to be achieved between the stable stack emissions value and the stable ending high-level gas reading. Use the following criteria to assess when a stable reading of stack emissions or calibration gas concentration has been attained. A stable value is equivalent to a reading with a

change of less than 2.0 percent of the span value for 2 minutes, or a reading with a change of less than 6.0 percent from the measured average concentration over 6 minutes. Alternatively, the reading is considered stable if it changes by no more than 0.5 ppm, 0.5 μg/m^3 (for Hg), or 0.2% CO_2 or O_2 (as applicable) for two minutes. (Owners or operators of systems which do not record data in 1-minute or 3-minute intervals may petition the Administrator under §75.66 for alternative stabilization criteria). For monitors or monitoring systems that perform a series of operations (such as purge, sample, and analyze), time the injections of the calibration gases so they will produce the longest possible cycle time. Refer to Figures 6a and 6b in this appendix for example calculations of upscale and downscale cycle times. Report the slower of the two cycle times (upscale or downscale) as the cycle time for the analyzer. Prior to January 1, 2009 for the NO_X-diluent continuous emission monitoring system test, either record and report the longer cycle time of the two component analyzers as the system cycle time or record the cycle time for each component analyzer separately (as applicable). On and after January 1, 2009, record the cycle time for each component analyzer separately. For time-shared systems, perform the cycle time tests at each probe locations that will be polled within the same 15-minute period during monitoring system operations. To determine the cycle time for time-shared systems, at each monitoring location, report the sum of the cycle time observed at that monitoring location plus the sum of the time required for all purge cycles (as determined by the continuous emission monitoring system manufacturer) at each of the probe locations of the time-shared systems. For monitors with dual ranges, report the test results for each range separately. Cycle time test results are acceptable for monitor or monitoring system certification, recertification or diagnostic testing if none of the cycle times exceed 15 minutes. The status of emissions data from a monitor prior to and during a cycle time test period shall be determined as follows:

(a) For initial certification, data from the monitor are considered invalid until all certification tests, including the cycle time test, have been successfully completed, unless the conditional data validation procedures in §75.20(b)(3) are used. When the procedures in §75.20(b)(3) are followed, the words ''initial certification'' apply instead of ''recertification,'' and complete all of the initial certification tests by the applicable deadline in §75.4, rather than within the time periods specified in §75.20(b)(3)(iv) for the individual tests.

(b) When a cycle time test is required as a diagnostic test or for recertification, use the data validation procedures in §75.20(b)(3).

6.5 Relative Accuracy and Bias Tests (General Procedures)

Perform the required relative accuracy test audits (RATAs) as follows for each CO_2 emissions concentration monitor (including O_2 monitors used to determine CO_2 emissions concentration), each SO_2 pollutant concentration monitor, each NO_X concentration monitoring system used to determine NO_X mass emissions, each flow monitor, each NO_X-diluent CEMS, each O_2 or CO_2 diluent monitor used to calculate heat input, each Hg concentration monitoring system, each sorbent trap monitoring system, and each moisture monitoring system. For NO_X concentration monitoring systems used to determine NO_X mass emissions, as defined in §75.71(a)(2), use the same general RATA procedures as for SO_2 pollutant concentration monitors; however, use the reference methods for NO_X concentration specified in section 6.5.10 of this appendix:

(a) Except as otherwise provided in this paragraph or in §75.21(a)(5), perform each RATA while the unit (or units, if more than one unit exhausts into the flue) is combusting the fuel that is a normal primary or backup fuel for that unit (for some units, more than one type of fuel may be considered normal, *e.g.*, a unit that combusts gas or oil on a seasonal basis). For units that co-fire fuels as the predominant mode of operation, perform the RATAs while co-firing. For Hg monitoring systems, perform the RATAs while the unit is combusting coal. When relative accuracy test audits are performed on CEMS installed on bypass stacks/ducts, use the fuel normally combusted by the unit (or units, if more than one unit exhausts into the flue) when emissions exhaust through the bypass stack/ducts.

(b) Perform each RATA at the load (or operating) level(s) specified in section 6.5.1 or 6.5.2 of this appendix or in section 2.3.1.3 of appendix B to this part, as applicable.

(c) For monitoring systems with dual ranges, perform the relative accuracy test on the range normally used for measuring emissions. For units with add-on SO_2 or NO_X controls or add-on Hg controls that operate continuously rather than seasonally, or for units that need a dual range to record high concentration ''spikes'' during startup conditions, the low range is considered normal. However, for some dual span units (e.g., for units that use fuel switching or for which the emission controls are operated seasonally), provided that both monitor ranges are connected to a common probe and sample interface, either of the two measurement ranges may be considered normal; in such cases, perform the RATA on the range that is in use at the time of the scheduled test. If the

low and high measurement ranges are connected to separate sample probes and interfaces, RATA testing on both ranges is required.

(d) Record monitor or monitoring system output from the data acquisition and handling system.

(e) Complete each single-load relative accuracy test audit within a period of 168 consecutive unit operating hours, as defined in §72.2 of this chapter (or, for CEMS installed on common stacks or bypass stacks, 168 consecutive stack operating hours, as defined in §72.2 of this chapter). Notwithstanding this requirement, up to 336 consecutive unit or stack operating hours may be taken to complete the RATA of a Hg monitoring system, when ASTM 6784–02 (incorporated by reference under §75.6 of this part) or Method 29 in appendix A–8 to part 60 of this chapter is used as the reference method. For 2-level and 3-level flow monitor RATAs, complete all of the RATAs at all levels, to the extent practicable, within a period of 168 consecutive unit (or stack) operating hours; however, if this is not possible, up to 720 consecutive unit (or stack) operating hours may be taken to complete a multiple-load flow RATA.

(f) The status of emission data from the CEMS prior to and during the RATA test period shall be determined as follows:

(1) For the initial certification of a CEMS, data from the monitoring system are considered invalid until all certification tests, including the RATA, have been successfully completed, unless the conditional data validation procedures in §75.20(b)(3) are used. When the procedures in §75.20(b)(3) are followed, the words ''initial certification'' apply instead of ''recertification,'' and complete all of the initial certification tests by the applicable deadline in §75.4, rather than within the time periods specified in §75.20(b)(3)(iv) for the individual tests.

(2) For the routine quality assurance RATAs required by section 2.3.1 of appendix B to this part, use the data validation procedures in section 2.3.2 of appendix B to this part.

(3) For recertification RATAs, use the data validation procedures in §75.20(b)(3).

(4) For quality assurance RATAs of non-redundant backup monitoring systems, use the data validation procedures in §§75.20(d)(2)(v) and (vi).

(5) For RATAs performed during and after the expiration of a grace period, use the data validation procedures in sections 2.3.2 and 2.3.3, respectively, of appendix B to this part.

(6) For all other RATAs, use the data validation procedures in section 2.3.2 of appendix B to this part.

(g) For each SO_2 or CO_2 emissions concentration monitor, each flow monitor, each CO_2 or O_2 diluent monitor used to determine heat input, each NO_X concentration monitoring system used to determine NO_X mass emissions, as defined in §75.71(a)(2), each moisture monitoring system, each NO_X-diluent CEMS, each Hg concentration monitoring system, and each sorbent trap monitoring system, calculate the relative accuracy, in accordance with section 7.3 or 7.4 of this appendix, as applicable. In addition (except for CO_2, O_2, or moisture monitors), test for bias and determine the appropriate bias adjustment factor, in accordance with sections 7.6.4 and 7.6.5 of this appendix, using the data from the relative accuracy test audits.

6.5.1 Gas Monitoring System RATAs (Special Considerations)

(a) Perform the required relative accuracy test audits for each SO_2 or CO_2 emissions concentration monitor, each CO_2 or O_2 diluent monitor used to determine heat input, each NO_X-diluent CEMS, each NO_X concentration monitoring system used to determine NO_X mass emissions, as defined in §75.71(a)(2), each Hg concentration monitoring system, and each sorbent trap monitoring system at the normal load level or normal operating level for the unit (or combined units, if common stack), as defined in section 6.5.2.1 of this appendix. If two load levels or operating levels have been designated as normal, the RATAs may be done at either load level.

(b) For the initial certification of a gas or Hg monitoring system and for recertifications in which, in addition to a RATA, one or more other tests are required (*i.e.*, a linearity test, cycle time test, or 7-day calibration error test), EPA recommends that the RATA not be commenced until the other required tests of the CEMS have been passed.

6.5.2 Flow Monitor RATAs (Special Considerations)

(a) Except as otherwise provided in paragraph (b) or (e) of this section, perform relative accuracy test audits for the initial certification of each flow monitor at three different exhaust gas velocities (low, mid, and high), corresponding to three different load levels or operating levels within the range of operation, as defined in section 6.5.2.1 of this appendix. For a common stack/duct, the three different exhaust gas velocities may be obtained from frequently used unit/load or operating level combinations for the units exhausting to the common stack. Select the three exhaust gas velocities such that the audit points at adjacent load or operating levels (i.e., low and mid or mid and high), in megawatts (or in thousands of lb/hr of steam production or in ft/sec, as applicable), are separated by no less than 25.0 percent of the range of operation, as defined in section 6.5.2.1 of this appendix.

(b) For flow monitors on bypass stacks/ducts and peaking units, the flow monitor

relative accuracy test audits for initial certification and recertification shall be single-load tests, performed at the normal load, as defined in section 6.5.2.1(d) of this appendix.

(c) Flow monitor recertification RATAs shall be done at three load level(s) (or three operating levels), unless otherwise specified in paragraph (b) or (e) of this section or unless otherwise specified or approved by the Administrator.

(d) The semiannual and annual quality assurance flow monitor RATAs required under appendix B to this part shall be done at the load level(s) (or operating levels) specified in section 2.3.1.3 of appendix B to this part.

(e) For flow monitors installed on units that do not produce electrical or thermal output, the flow RATAs for initial certification or recertification may be done at fewer than three operating levels, if:

(1) The owner or operator provides a technical justification in the hardcopy portion of the monitoring plan for the unit required under §75.53(e)(2), demonstrating that the unit operates at only one level or two levels during normal operation (excluding unit startup and shutdown). Appropriate documentation and data must be provided to support the claim of single-level or two-level operation; and

(2) The justification provided in paragraph (e)(1) of this section is deemed to be acceptable by the permitting authority.

6.5.2.1 Range of Operation and Normal Load (or Operating) Level(s)

(a) The owner or operator shall determine the upper and lower boundaries of the ''range of operation'' as follows for each unit (or combination of units, for common stack configurations):

(1) For affected units that produce electrical output (in megawatts) or thermal output (in klb/hr of steam production or mmBtu/hr), the lower boundary of the range of operation of a unit shall be the minimum safe, stable loads for any of the units discharging through the stack. Alternatively, for a group of frequently-operated units that serve a common stack, the sum of the minimum safe, stable loads for the individual units may be used as the lower boundary of the range of operation. The upper boundary of the range of operation of a unit shall be the maximum sustainable load. The ''maximum sustainable load'' is the higher of either: the nameplate or rated capacity of the unit, less any physical or regulatory limitations or other deratings; or the highest sustainable load, based on at least four quarters of representative historical operating data. For common stacks, the maximum sustainable load is the sum of all of the maximum sustainable loads of the individual units discharging through the stack, unless this load is unattainable in practice, in which case use the highest sustainable combined load for the units that discharge through the stack. Based on at least four quarters of representative historical operating data. The load values for the unit(s) shall be expressed either in units of megawatts of thousands of lb/hr of steam load or mmBtu/hr of thermal output; or

(2) For affected units that do not produce electrical or thermal output, the lower boundary of the range of operation shall be the minimum expected flue gas velocity (in ft/sec) during normal, stable operation of the unit. The upper boundary of the range of operation shall be the maximum potential flue gas velocity (in ft/sec) as defined in section 2.1.4.1 of this appendix. The minimum expected and maximum potential velocities may be derived from the results of reference method testing or by using Equation A–3a or A–3b (as applicable) in section 2.1.4.1 of this appendix. If Equation A–3a or A–3b is used to determine the minimum expected velocity, replace the word ''maximum'' with the word ''minimum'' in the definitions of ''MPV,'' ''H_f,'' ''% O_{2d},'' and ''% H_2O,'' and replace the word ''minimum'' with the word ''maximum'' in the definition of ''CO_{2d}.'' Alternatively, 0.0 ft/sec may be used as the lower boundary of the range of operation.

(b) The operating levels for relative accuracy test audits shall, except for peaking units, be defined as follows: the ''low'' operating level shall be the first 30.0 percent of the range of operation; the ''mid'' operating level shall be the middle portion (>30.0 percent, but ≤60.0 percent) of the range of operation; and the ''high'' operating level shall be the upper end (>60.0 percent) of the range of operation. For example, if the upper and lower boundaries of the range of operation are 100 and 1100 megawatts, respectively, then the low, mid, and high operating levels would be 100 to 400 megawatts, 400 to 700 megawatts, and 700 to 1100 megawatts, respectively.

(c) Units that do not produce electrical or thermal output are exempted from the requirements of this paragraph, (c). The owner or operator shall identify, for each affected unit or common stack (except for peaking units and units using the low mass emissions (LME) excepted methodology under §75.19), the ''normal'' load level or levels (low, mid or high), based on the operating history of the unit(s). To identify the normal load level(s), the owner or operator shall, at a minimum, determine the relative number of operating hours at each of the three load levels, low, mid and high over the past four representative operating quarters. The owner or operator shall determine, to the nearest 0.1 percent, the percentage of the time that each load level (low, mid, high) has been used during that time period. A summary of the data used for this determination and the calculated results shall be kept on-site in a format suitable for inspection. For new units or

newly-affected units, the data analysis in this paragraph may be based on fewer than four quarters of data if fewer than four representative quarters of historical load data are available. Or, if no historical load data are available, the owner or operator may designate the normal load based on the expected or projected manner of operating the unit. However, in either case, once four quarters of representative data become available, the historical load analysis shall be repeated.

(d) Determination of normal load (or operating level)

(1) Based on the analysis of the historical load data described in paragraph (c) of this section, the owner or operator shall, for units that produce electrical or thermal output, designate the most frequently used load level as the normal load level for the unit (or combination of units, for common stacks). The owner or operator may also designate the second most frequently used load level as an additional normal load level for the unit or stack. For peaking units and LME units, normal load designations are unnecessary; the entire operating load range shall be considered normal. If the manner of operation of the unit changes significantly, such that the designated normal load(s) or the two most frequently used load levels change, the owner or operator shall repeat the historical load analysis and shall redesignate the normal load(s) and the two most frequently used load levels, as appropriate. A minimum of two representative quarters of historical load data are required to document that a change in the manner of unit operation has occurred. Update the electronic monitoring plan whenever the normal load level(s) and the two most frequently-used load levels are redesignated.

(2) For units that do not produce electrical or thermal output, the normal operating level(s) shall be determined using sound engineering judgment, based on knowledge of the unit and operating experience with the industrial process.

(e) The owner or operator shall report the upper and lower boundaries of the range of operation for each unit (or combination of units, for common stacks), in units of megawatts or thousands of lb/hr or mmBtu/hr of steam production or ft/sec (as applicable), in the electronic monitoring plan required under §75.53. Except for peaking units and LME units, the owner or operator shall indicate, in the electronic monitoring plan, the load level (or levels) designated as normal under this section and shall also indicate the two most frequently used load levels.

6.5.2.2 Multi-Load (or Multi-Level) Flow RATA Results

For each multi-load (or multi-level) flow RATA, calculate the flow monitor relative accuracy at each operating level. If a flow monitor relative accuracy test is failed or aborted due to a problem with the monitor on any level of a 2-level (or 3-level) relative accuracy test audit, the RATA must be repeated at that load (or operating) level. However, the entire 2-level (or 3-level) relative accuracy test audit does not have to be repeated unless the flow monitor polynomial coefficients or K-factor(s) are changed, in which case a 3-level RATA is required (or, a 2-level RATA, for units demonstrated to operate at only two levels, under section 6.5.2(e) of this appendix).

6.5.3 [Reserved]

6.5.4 Calculations

Using the data from the relative accuracy test audits, calculate relative accuracy and bias in accordance with the procedures and equations specified in section 7 of this appendix.

6.5.5 Reference Method Measurement Location

Select a location for reference method measurements that is (1) accessible; (2) in the same proximity as the monitor or monitoring system location; and (3) meets the requirements of Performance Specification 2 in appendix B of part 60 of this chapter for SO_2 and NO_X continuous emission monitoring systems, Performance Specification 3 in appendix B of part 60 of this chapter for CO_2 or O_2 monitors, or method 1 (or 1A) in appendix A of part 60 of this chapter for volumetric flow, except as otherwise indicated in this section or as approved by the Administrator.

6.5.6 Reference Method Traverse Point Selection

Select traverse points that ensure acquisition of representative samples of pollutant and diluent concentrations, moisture content, temperature, and flue gas flow rate over the flue cross section. To achieve this, the reference method traverse points shall meet the requirements of section 8.1.3 of Performance Specification 2 (''PS No. 2'') in appendix B to part 60 of this chapter (for SO_2, NO_X, and moisture monitoring system RATAs), Performance Specification 3 in appendix B to part 60 of this chapter (for O_2 and CO_2 monitor RATAs), Method 1 (or 1A) (for volumetric flow rate monitor RATAs), Method 3 (for molecular weight), and Method 4 (for moisture determination) in appendix A to part 60 of this chapter. The following alternative reference method traverse point locations are permitted for moisture and gas monitor RATAs:

(a) For moisture determinations where the moisture data are used only to determine stack gas molecular weight, a single reference method point, located at least 1.0

meter from the stack wall, may be used. For moisture monitoring system RATAs and for gas monitor RATAs in which moisture data are used to correct pollutant or diluent concentrations from a dry basis to a wet basis (or vice-versa), single-point moisture sampling may only be used if the 12-point stratification test described in section 6.5.6.1 of this appendix is performed prior to the RATA for at least one pollutant or diluent gas, and if the test is passed according to the acceptance criteria in section 6.5.6.3(b) of this appendix.

(b) For gas monitoring system RATAs, the owner or operator may use any of the following options:

(1) At any location (including locations where stratification is expected), use a minimum of six traverse points along a diameter, in the direction of any expected stratification. The points shall be located in accordance with Method 1 in appendix A to part 60 of this chapter.

(2) At locations where section 8.1.3 of PS No. 2 allows the use of a short reference method measurement line (with three points located at 0.4, 1.2, and 2.0 meters from the stack wall), the owner or operator may use an alternative 3-point measurement line, locating the three points at 4.4, 14.6, and 29.6 percent of the way across the stack, in accordance with Method 1 in appendix A to part 60 of this chapter.

(3) At locations where stratification is likely to occur (e.g., following a wet scrubber or when dissimilar gas streams are combined), the short measurement line from section 8.1.3 of PS No. 2 (or the alternative line described in paragraph (b)(2) of this section) may be used in lieu of the prescribed ''long'' measurement line in section 8.1.3 of PS No. 2, provided that the 12-point stratification test described in section 6.5.6.1 of this appendix is performed and passed one time at the location (according to the acceptance criteria of section 6.5.6.3(a) of this appendix) and provided that either the 12-point stratification test or the alternative (abbreviated) stratification test in section 6.5.6.2 of this appendix is performed and passed prior to each subsequent RATA at the location (according to the acceptance criteria of section 6.5.6.3(a) of this appendix).

(4) A single reference method measurement point, located no less than 1.0 meter from the stack wall and situated along one of the measurement lines used for the stratification test, may be used at any sampling location if the 12-point stratification test described in section 6.5.6.1 of this appendix is performed and passed prior to each RATA at the location (according to the acceptance criteria of section 6.5.6.3(b) of this appendix).

(5) If Method 7E is used as the reference method for the RATA of a NO_X CEMS installed on a combustion turbine, the reference method measurements may be made at the sampling points specified in section 6.1.2 of Method 20 in appendix A to part 60 of this chapter.

(c) For Hg monitoring systems, use the same basic approach for traverse point selection that is used for the other gas monitoring system RATAs, except that the stratification test provisions in sections 8.1.3 through 8.1.3.5 of Method 30A shall apply, rather than the provisions of sections 6.5.6.1 through 6.5.6.3 of this appendix.

6.5.6.1 Stratification Test

(a) With the unit(s) operating under steady-state conditions at the normal load level (or normal operating level), as defined in section 6.5.2.1 of this appendix, use a traversing gas sampling probe to measure the pollutant (SO_2 or NO_X) and diluent (CO_2 or O_2) concentrations at a minimum of twelve (12) points, located according to Method 1 in appendix A to part 60 of this chapter.

(b) Use Methods 6C, 7E, and 3A in appendix A to part 60 of this chapter to make the measurements. Data from the reference method analyzers must be quality-assured by performing analyzer calibration error and system bias checks before the series of measurements and by conducting system bias and calibration drift checks after the measurements, in accordance with the procedures of Methods 6C, 7E, and 3A.

(c) Measure for a minimum of 2 minutes at each traverse point. To the extent practicable, complete the traverse within a 2-hour period.

(d) If the load has remained constant (±3.0 percent) during the traverse and if the reference method analyzers have passed all of the required quality assurance checks, proceed with the data analysis.

(e) Calculate the average NO_X, SO_2, and CO_2 (or O_2) concentrations at each of the individual traverse points. Then, calculate the arithmetic average NO_X, SO_2, and CO_2 (or O_2) concentrations for all traverse points.

6.5.6.2 Alternative (Abbreviated) Stratification Test

(a) With the unit(s) operating under steady-state conditions at normal load level (or normal operating level), as defined in section 6.5.2.1 of this appendix, use a traversing gas sampling probe to measure the pollutant (SO_2 or NO_X) and diluent (CO_2 or O_2) concentrations at three points. The points shall be located according to the specifications for the long measurement line in section 8.1.3 of PS No. 2 (i.e., locate the points 16.7 percent, 50.0 percent, and 83.3 percent of the way across the stack). Alternatively, the concentration measurements may be made at six traverse points along a diameter. The six points shall be located in accordance with Method 1 in appendix A to part 60 of this chapter.

(b) Use Methods 6C, 7E, and 3A in appendix A to part 60 of this chapter to make the measurements. Data from the reference method analyzers must be quality-assured by performing analyzer calibration error and system bias checks before the series of measurements and by conducting system bias and calibration drift checks after the measurements, in accordance with the procedures of Methods 6C, 7E, and 3A.

(c) Measure for a minimum of 2 minutes at each traverse point. To the extent practicable, complete the traverse within a 1-hour period.

(d) If the load has remained constant (±3.0 percent) during the traverse and if the reference method analyzers have passed all of the required quality assurance checks, proceed with the data analysis.

(e) Calculate the average NO_X, SO_2, and CO_2 (or O_2) concentrations at each of the individual traverse points. Then, calculate the arithmetic average NO_X, SO_2, and CO_2 (or O_2) concentrations for all traverse points.

6.5.6.3 Stratification Test Results and Acceptance Criteria

(a) For each pollutant or diluent gas, the short reference method measurement line described in section 8.1.3 of PS No. 2 may be used in lieu of the long measurement line prescribed in section 8.1.3 of PS No. 2 if the results of a stratification test, conducted in accordance with section 6.5.6.1 or 6.5.6.2 of this appendix (as appropriate; see section 6.5.6(b)(3) of this appendix), show that the concentration at each individual traverse point differs by no more than ±10.0 percent from the arithmetic average concentration for all traverse points. The results are also acceptable if the concentration at each individual traverse point differs by no more than ±5ppm or ±0.5 percent CO_2 (or O_2) from the arithmetic average concentration for all traverse points.

(b) For each pollutant or diluent gas, a single reference method measurement point, located at least 1.0 meter from the stack wall and situated along one of the measurement lines used for the stratification test, may be used for that pollutant or diluent gas if the results of a stratification test, conducted in accordance with section 6.5.6.1 of this appendix, show that the concentration at each individual traverse point differs by no more than ±5.0 percent from the arithmetic average concentration for all traverse points. The results are also acceptable if the concentration at each individual traverse point differs by no more than ±3 ppm or ±0.3 percent CO_2 (or O_2) from the arithmetic average concentration for all traverse points.

(c) The owner or operator shall keep the results of all stratification tests on-site, in a format suitable for inspection, as part of the supplementary RATA records required under § 75.59(a)(7).

6.5.7 Sampling Strategy

(a) Conduct the reference method tests so they will yield results representative of the pollutant concentration, emission rate, moisture, temperature, and flue gas flow rate from the unit and can be correlated with the pollutant concentration monitor, CO_2 or O_2 monitor, flow monitor, and SO_2, Hg, or NO_X CEMS measurements. The minimum acceptable time for a gas monitoring system RATA run or for a moisture monitoring system RATA run is 21 minutes. For each run of a gas monitoring system RATA, all necessary pollutant concentration measurements, diluent concentration measurements, and moisture measurements (if applicable) must, to the extent practicable, be made within a 60-minute period. For NO_X-diluent monitoring system RATAs, the pollutant and diluent concentration measurements must be made simultaneously. For flow monitor RATAs, the minimum time per run shall be 5 minutes. Flow rate reference method measurements may be made either sequentially from port to port or simultaneously at two or more sample ports. The velocity measurement probe may be moved from traverse point to traverse point either manually or automatically. If, during a flow RATA, significant pulsations in the reference method readings are observed, be sure to allow enough measurement time at each traverse point to obtain an accurate average reading when a manual readout method is used (e.g., a ''sight-weighted'' average from a manometer). Also, allow sufficient measurement time to ensure that stable temperature readings are obtained at each traverse point, particularly at the first measurement point at each sample port, when a probe is moved sequentially from port-to-port. A minimum of one set of auxiliary measurements for stack gas molecular weight determination (i.e., diluent gas data and moisture data) is required for every clock hour of a flow RATA or for every three test runs (whichever is less restrictive). Alternatively, moisture measurements for molecular weight determination may be performed before and after a series of flow RATA runs at a particular load level (low, mid, or high), provided that the time interval between the two moisture measurements does not exceed three hours. If this option is selected, the results of the two moisture determinations shall be averaged arithmetically and applied to all RATA runs in the series. Successive flow RATA runs may be performed without waiting in-between runs. If an O_2-diluent monitor is used as a CO_2 continuous emission monitoring system, perform a CO_2 system RATA (i.e., measure CO_2, rather than O_2, with the reference method). For moisture monitoring systems, an appropriate coefficient, ''K'' factor or other suitable mathematical algorithm may be developed prior to the RATA,

to adjust the monitoring system readings with respect to the reference method. If such a coefficient, K-factor or algorithm is developed, it shall be applied to the CEMS readings during the RATA and (if the RATA is passed), to the subsequent CEMS data, by means of the automated data acquisition and handling system. The owner or operator shall keep records of the current coefficient, K factor or algorithm, as specified in 75.59(a)(5)(vii). Whenever the coefficient, K factor or algorithm is changed, a RATA of the moisture monitoring system is required. For the RATA of a Hg CEMS using the Ontario Hydro Method, or for the RATA of a sorbent trap system (irrespective of the reference method used), the time per run must be long enough to collect a sufficient mass of Hg to analyze. For the RATA of a sorbent trap monitoring system, the type of sorbent material used by the traps shall be the same as for daily operation of the monitoring system; however, the size of the traps used for the RATA may be smaller than the traps used for daily operation of the system. Spike the third section of each sorbent trap with elemental Hg, as described in section 7.1.2 of appendix K to this part. Install a new pair of sorbent traps prior to each test run. For each run, the sorbent trap data shall be validated according to the quality assurance criteria in section 8 of appendix K to this part.

(b) To properly correlate individual SO_2, Hg, or NO_X CEMS data (in lb/MMBtu) and volumetric flow rate data with the reference method data, annotate the beginning and end of each reference method test run (including the exact time of day) on the individual chart recorder(s) or other permanent recording device(s).

6.5.8 Correlation of Reference Method and Continuous Emission Monitoring System

Confirm that the monitor or monitoring system and reference method test results are on consistent moisture, pressure, temperature, and diluent concentration basis (e.g., since the flow monitor measures flow rate on a wet basis, method 2 test results must also be on a wet basis). Compare flow-monitor and reference method results on a scfh basis. Also, consider the response times of the pollutant concentration monitor, the continuous emission monitoring system, and the flow monitoring system to ensure comparison of simultaneous measurements.

For each relative accuracy test audit run, compare the measurements obtained from the monitor or continuous emission monitoring system (in ppm, percent CO_2, lb/mmBtu, or other units) against the corresponding reference method values. Tabulate the paired data in a table such as the one shown in Figure 2.

6.5.9 Number of Reference Method Tests

Perform a minimum of nine sets of paired monitor (or monitoring system) and reference method test data for every required (i.e., certification, recertification, diagnostic, semiannual, or annual) relative accuracy test audit. For 2-level and 3-level relative accuracy test audits of flow monitors, perform a minimum of nine sets at each of the operating levels.

NOTE: The tester may choose to perform more than nine sets of reference method tests. If this option is chosen, the tester may reject a maximum of three sets of the test results, as long as the total number of test results used to determine the relative accuracy or bias is greater than or equal to nine. Report all data, including the rejected CEMS data and corresponding reference method test results.

6.5.10 Reference Methods

The following methods are from appendix A to part 60 of this chapter or have been published by ASTM, and are the reference methods for performing relative accuracy test audits under this part: Method 1 or 1A in appendix A–1 to part 60 of this chapter for siting; Method 2 in appendices A–1 and A–2 to part 60 of this chapter or its allowable alternatives in appendix A to part 60 of this chapter (except for Methods 2B and 2E in appendix A–1 to part 60 of this chapter) for stack gas velocity and volumetric flow rate; Methods 3, 3A or 3B in appendix A–2 to part 60 of this chapter for O_2 and CO_2; Method 4 in appendix A–3 to part 60 of this chapter for moisture; Methods 6, 6A or 6C in appendix A–4 to part 60 of this chapter for SO_2; Methods 7, 7A, 7C, 7D or 7E in appendix A–4 to part 60 of this chapter for NO_X, excluding the exceptions of Method 7E in appendix A–4 to part 60 of this chapter identified in §75.22(a)(5); and for Hg, either ASTM D6784–02 (the Ontario Hydro Method) (incorporated by reference under §75.6 of this part), Method 29 in appendix A–8 to part 60 of this chapter, Method 30A, or Method 30B When using Method 7E in appendix A–4 to part 60 of this chapter for measuring NO_X concentration, total NO_X, both NO and NO_2, must be measured.

7. CALCULATIONS

7.1 Linearity Check

Analyze the linearity data for pollutant concentration and CO_2 or O_2 monitors as follows. Calculate the percentage error in linearity based upon the reference value at the low-level, mid-level, and high-level concentrations specified in section 6.2 of this appendix. Perform this calculation once during the certification test. Use the following equation to calculate the error in linearity for each reference value.

$$LE = \frac{|R-A|}{R} \times 100$$

(Eq. A–4)

where,

LE = Percentage Linearity error, based upon the reference value.

R = Reference value of Low-, mid-, or high-level calibration gas introduced into the monitoring system.

A = Average of the monitoring system responses.

7.2 Calibration Error

7.2.1 Pollutant Concentration and Diluent Monitors

For each reference value, calculate the percentage calibration error based upon instrument span for daily calibration error tests using the following equation:

$$CE = \frac{|R-A|}{S} \times 100$$

(Eq. A–5)

where,

CE = Calibration error as a percentage of the span of the instrument.

R = Reference value of zero or upscale (high-level or mid-level, as applicable) calibration gas introduced into the monitoring system.

A = Actual monitoring system response to the calibration gas.

S = Span of the instrument, as specified in section 2 of this appendix.

7.2.2 Flow Monitor Calibration Error

For each reference value, calculate the percentage calibration error based upon span using the following equation:

$$CE = \frac{|R-A|}{S} \times 100 \qquad \text{(Eq. A–6)}$$

where:

CE = Calibration error as a percentage of span.

R = Low or high level reference value specified in section 2.2.2.1 of this appendix.

A = Actual flow monitor response to the reference value.

S = Flow monitor calibration span value as determined under section 2.1.4.2 of this appendix.

7.3 Relative Accuracy for SO_2 and CO_2 Emissions Concentration Monitors, O_2 Monitors, NO_X Concentration Monitoring Systems, Hg Monitoring Systems, and Flow Monitors

Analyze the relative accuracy test audit data from the reference method tests for SO_2 and CO_2 emissions concentration monitors, CO_2 or O_2 monitors used only for heat input rate determination, NO_X concentration monitoring systems used to determine NO_X mass emissions under subpart H of this part, Hg monitoring systems used to determine Hg mass emissions under subpart I of this part, and flow monitors using the following procedures. An example is shown in Figure 2. Calculate the mean of the monitor or monitoring system measurement values. Calculate the mean of the reference method values. Using data from the automated data acquisition and handling system, calculate the arithmetic differences between the reference method and monitor measurement data sets. Then calculate the arithmetic mean of the difference, the standard deviation, the confidence coefficient, and the monitor or monitoring system relative accuracy using the following procedures and equations.

7.3.1 Arithmetic Mean

Calculate the arithmetic mean of the differences, $\bar{d}$, of a data set as follows.

$$\text{“}\sum_{i=1}^{n} di\text{”}$$

(Eq. A–7)

where,

n = Number of data points.

$\sum_{i=1}^{n} d_i$ = Algebraic sum of the individual differences d_i.

d_i = The difference between a reference method value and the corresponding continuous emission monitoring system value (RM_i–CEM_i) at a given point in time i.

7.3.2 Standard Deviation

Calculate the standard deviation, S_d, of a data set as follows:

$$S_d = \sqrt{\frac{\sum_{i=1}^{n} d_i^2 - \left[\frac{\left(\sum_{i=1}^{n} d_i\right)^2}{n}\right]}{n-1}}$$

(Eq. A–8)

7.3.3 Confidence Coefficient

Calculate the confidence coefficient (one-tailed), cc, of a data set as follows.

$$cc = t_{0.025} \frac{S_d}{\sqrt{n}}$$

(eq. A–9)

where,

$t_{0.025}$ = t value (see table 7–1).

TABLE 7–1—T-VALUES

n-1	$t_{0.025}$	n-1	$t_{0.025}$	n-1	$t_{0.025}$
1	12.706	12	2.179	23	2.069
2	4.303	13	2.160	24	2.064
3	3.182	14	2.145	25	2.060
4	2.776	15	2.131	26	2.056
5	2.571	16	2.120	27	2.052
6	2.447	17	2.110	28	2.048
7	2.365	18	2.101	29	2.045
8	2.306	19	2.093	30	2.042
9	2.262	20	2.086	40	2.021
10	2.228	21	2.080	60	2.000
11	2.201	22	2.074	>60	1.960

7.3.4 Relative Accuracy

Calculate the relative accuracy of a data set using the following equation.

$$RA = \frac{|\bar{d}| + |cc|}{\overline{RM}} \times 100$$

(Eq. A–10)

where,

RM = Arithmetic mean of the reference method values.

$|\bar{d}|$ = The absolute value of the mean difference between the reference method values and the corresponding continuous emission monitoring system values.

|cc| = The absolute value of the confidence coefficient.

7.4 Relative Accuracy for NO_X-diluent Continuous Emission Monitoring Systems

Analyze the relative accuracy test audit data from the reference method tests for NO_X-diluent continuous emissions monitoring system as follows.

7.4.1 Data Preparation

If C_{NOx}, the NO_X concentration, is in ppm, multiply it by 1.194×10^{-7} (lb/dscf)/ppm to convert it to units of lb/dscf. If C_{NOx} is in mg/dscm, multiply it by 6.24×10^{-8} (lb/dscf)/(mg/dscm) to convert it to lb/dscf. Then, use the diluent (O_2 or CO_2) reference method results for the run and the appropriate F or F_c factor from table 1 in appendix F of this part to convert C_{NOx} from lb/dscf to lb/mmBtu units. Use the equations and procedure in section 3 of appendix F to this part, as appropriate.

7.4.2 NO_X Emission Rate

For each test run in a data set, calculate the average NO_X emission rate (in lb/mmBtu), by means of the data acquisition and handling system, during the time period of the test run. Tabulate the results as shown in example Figure 4.

7.4.3 Relative Accuracy

Use the equations and procedures in section 7.3 above to calculate the relative accuracy for the NO_X continuous emission monitoring system. In using equation A–7, ''d'' is, for each run, the difference between the NO_X emission rate values (in lb/mmBtu) obtained from the reference method data and the NO_X continuous emission monitoring system.

7.5 Relative Accuracy for Combined SO_2/Flow [Reserved]

7.6 Bias Test and Adjustment Factor

Test the following relative accuracy test audit data sets for bias: SO_2 pollutant concentration monitors; flow monitors; NO_X concentration monitoring systems used to determine NO_X mass emissions, as defined in §75.71(a)(2); NO_X-diluent CEMS, Hg concentration monitoring systems, and sorbent trap monitoring systems, using the procedures outlined in sections 7.6.1 through 7.6.5 of this appendix. For multiple-load flow RATAs, perform a bias test at each load level designated as normal under section 6.5.2.1 of this appendix.

7.6.1 Arithmetic Mean

Calculate the arithmetic mean of the difference, $\bar{d}$, of the data set using equation A–7 of this appendix. To calculate bias for an SO_2 or NO_X pollutant concentration monitor, ''d'' is, for each paired data point, the difference between the SO_2 or NO_X concentration value (in ppm) obtained from the reference method and the monitor. To calculate bias for a flow monitor, ''d'' is, for each paired data point, the difference between the flow rate values (in scfh) obtained from the reference method and the monitor. To calculate bias for a NO_X-diluent continuous emission monitoring system, ''d'' is, for each paired data point, the difference between the NO_X-diluent emission rate values (in lb/

mmBtu) obtained from the reference method and the monitoring system. To calculate bias for a Hg monitoring system when using the Ontario Hydro Method or Method 29 in appendix A–8 to part 60 of this chapter, ''d'' is, for each data point, the difference between the average Hg concentration value (in μg/m³) from the paired Ontario Hydro or Method 29 in appendix A–8 to part 60 of this chapter sampling trains and the concentration measured by the monitoring system. For sorbent trap monitoring systems, use the average Hg concentration measured by the paired traps in the calculation of ''d''.

7.6.2 Standard Deviation

Calculate the standard deviation, S_d, of the data set using equation A–8.

7.6.3 CONFIDENCE COEFFICIENT

Calculate the confidence coefficient, cc, of the data set using equation A–9.

7.6.4 Bias Test

If, for the relative accuracy test audit data set being tested, the mean difference, $\bar{d}$, is less than or equal to the absolute value of the confidence coefficient, | cc |, the monitor or monitoring system has passed the bias test. If the mean difference, $\bar{d}$, is greater than the absolute value of the confidence coefficient, √ cc √, the monitor or monitoring system has failed to meet the bias test requirement.

7.6.5 Bias Adjustment

(a) If the monitor or monitoring system fails to meet the bias test requirement, adjust the value obtained from the monitor using the following equation:

$$CEM_i^{Adjusted} = CEM_i^{Monitor} \times BAF \qquad \text{(Eq. A-11)}$$

Where:

$CEM_i^{Monitor}$ = Data (measurement) provided by the monitor at time i.

$CEM_i^{Adjusted}$ = Data value, adjusted for bias, at time i.

BAF = Bias adjustment factor, defined by:

$$BAF = 1 + \frac{|\bar{d}|}{CEM_{avg}} \qquad \text{(Eq. A-12)}$$

Where:

BAF = Bias adjustment factor, calculated to the nearest thousandth.

$\bar{d}$ = Arithmetic mean of the difference obtained during the failed bias test using Equation A–7.

CEM_{avg} = Mean of the data values provided by the monitor during the failed bias test.

(b) For single-load RATAs of SO_2 pollutant concentration monitors, NO_X concentration monitoring systems, NO_X-diluent monitoring systems, Hg concentration monitoring systems, and sorbent trap monitoring systems, and for the single-load flow RATAs required or allowed under section 6.5.2 of this appendix and sections 2.3.1.3(b) and 2.3.1.3(c) of appendix B to this part, the appropriate BAF is determined directly from the RATA results at normal load, using Equation A–12. Notwithstanding, when a NO_X concentration CEMS or an SO_2 CEMS or a NO_X-diluent CEMS installed on a low-emitting affected unit (i.e., average SO_2 or NO_X concentration during the RATA ≤ 250 ppm or average NO_X emission rate ≤ 0.200 lb/mmBtu) meets the normal 10.0 percent relative accuracy specification (as calculated using Equation A–10) or the alternate relative accuracy specification in section 3.3 of this appendix for low-emitters, but fails the bias test, the BAF may either be determined using Equation A–12, or a default BAF of 1.111 may be used. Similarly, for Hg concentration and sorbent trap monitoring systems, where the average Hg concentration during the RATA is < 5.0 μgm/dscm, if the monitoring system meets the normal or the alternative relative accuracy specification in section 3.3.8 of this appendix but fails the bias test, the owner or operator may either use the bias adjustment factor (BAF) calculated from Equation A–12 or may use a default BAF of 1.250 for reporting purposes under this part.

(c) For 2-load or 3-load flow RATAs, when only one load level (low, mid or high) has been designated as normal under section 6.5.2.1 of this appendix and the bias test is passed at the normal load level, apply a BAF of 1.000 to the subsequent flow rate data. If the bias test is failed at the normal load level, use Equation A–12 to calculate the normal load BAF and then perform an additional bias test at the second most frequently-used load level, as determined under section 6.5.2.1 of this appendix. If the bias test is passed at this second load level, apply the normal load BAF to the subsequent flow rate data. If the bias test is failed at this second load level, use Equation A–12 to calculate the BAF at the second load level and apply the higher of the two BAFs (either

from the normal load level or from the second load level) to the subsequent flow rate data.

(d) For 2-load or 3-load flow RATAs, when two load levels have been designated as normal under section 6.5.2.1 of this appendix and the bias test is passed at both normal load levels, apply a BAF of 1.000 to the subsequent flow rate data. If the bias test is failed at one of the normal load levels but not at the other, use Equation A–12 to calculate the BAF for the normal load level at which the bias test was failed and apply that BAF to the subsequent flow rate data. If the bias test is failed at both designated normal load levels, use Equation A–12 to calculate the BAF at each normal load level and apply the higher of the two BAFs to the subsequent flow rate data.

(e) Each time a RATA is passed and the appropriate bias adjustment factor has been determined, apply the BAF prospectively to all monitoring system data, beginning with the first clock hour following the hour in which the RATA was completed. For a 2-load flow RATA, the ''hour in which the RATA was completed'' refers to the hour in which the testing at both loads was completed; for a 3-load RATA, it refers to the hour in which the testing at all three loads was completed.

(f) Use the bias-adjusted values in computing substitution values in the missing data procedure, as specified in subpart D of this part, and in reporting the concentration of SO_2 or Hg, the flow rate, the average NO_X emission rate, the unit heat input, and the calculated mass emissions of SO_2 and CO_2 during the quarter and calendar year, as specified in subpart G of this part. In addition, when using a NO_X concentration monitoring system and a flow monitor to calculate NO_X mass emissions under subpart H of this part, or when using a Hg concentration or sorbent trap monitoring system and a flow monitor to calculate Hg mass emissions under subpart I of this part, use bias-adjusted values for NO_X (or Hg) concentration and flow rate in the mass emission calculations and use bias-adjusted NO_X (or Hg) concentrations to compute the appropriate substitution values for NO_X (or Hg) concentration in the missing data routines under subpart D of this part.

(g) For units that do not produce electrical or thermal output, the provisions of paragraphs (a) through (f) of this section apply, except that the terms, ''single-load'', ''2-load'', ''3-load'', and ''load level'' shall be replaced, respectively, with the terms, ''single-level'', ''2-level'', ''3-level'', and ''operating level''.

7.7 Reference Flow-to-Load Ratio or Gross Heat Rate

(a) Except as provided in section 7.8 of this appendix, the owner or operator shall determine R_{ref}, the reference value of the ratio of flow rate to unit load, each time that a passing flow RATA is performed at a load level designated as normal in section 6.5.2.1 of this appendix. The owner or operator shall report the current value of R_{ref} in the electronic quarterly report required under §75.64 and shall also report the completion date of the associated RATA. If two load levels have been designated as normal under section 6.5.2.1 of this appendix, the owner or operator shall determine a separate R_{ref} value for each of the normal load levels. The reference flow-to-load ratio shall be calculated as follows:

$$R_{ref} = \frac{Q_{ref}}{L_{avg}} \times 10^{-5} \qquad \text{(Eq. A-13)}$$

Where:

R_{ref} = Reference value of the flow-to-load ratio, from the most recent normal-load flow RATA, scfh/megawatts, scfh/1000 lb/hr of steam, or scfh/(mmBtu/hr of steam output).

Q_{ref} = Average stack gas volumetric flow rate measured by the reference method during the normal-load RATA, scfh.

L_{avg} = Average unit load during the normal-load flow RATA, megawatts, 1000 lb/hr of steam, or mmBtu/hr of thermal output.

(b) In Equation A–13, for a common stack, determine L_{avg} by summing, for each RATA run, the operating loads of all units discharging through the common stack, and then taking the arithmetic average of the summed loads. For a unit that discharges its emissions through multiple stacks, either determine a single value of Q_{ref} for the unit or a separate value of Q_{ref} for each stack. In the former case, calculate Q_{ref} by summing, for each RATA run, the volumetric flow rates through the individual stacks and then taking the arithmetic average of the summed RATA run flow rates. In the latter case, calculate the value of Q_{ref} for each stack by taking the arithmetic average, for all RATA runs, of the flow rates through the stack. For a unit with a multiple stack discharge configuration consisting of a main stack and a bypass stack (e.g., a unit with a wet SO_2 scrubber), determine Q_{ref} separately for each stack at the time of the normal load flow RATA. Round off the value of R_{ref} to two decimal places.

(c) In addition to determining R_{ref} or as an alternative to determining R_{ref}, a reference value of the gross heat rate (GHR) may be determined. In order to use this option, quality-assured diluent gas (CO_2 or O_2) must be available for each hour of the most recent normal-load flow RATA. The reference value of the GHR shall be determined as follows:

$$(GHR)_{ref} = \frac{(\text{Heat Input})_{avg}}{L_{avg}} \times 1000 \qquad \text{(Eq. A-13a)}$$

Where:

$(GHR)_{ref}$ = Reference value of the gross heat rate at the time of the most recent normal-load flow RATA, Btu/kwh, Btu/lb steam load, or Btu heat input/mmBtu steam output.

$(\text{Heat Input})_{avg}$ = Average hourly heat input during the normal-load flow RATA, as determined using the applicable equation in appendix F to this part, mmBtu/hr. For multiple stack configurations, if the reference GHR value is determined separately for each stack, use the hourly heat input measured at each stack. If the reference GHR is determined at the unit level, sum the hourly heat inputs measured at the individual stacks.

L_{avg} = Average unit load during the normal-load flow RATA, megawatts, 1000 lb/hr of steam, or mmBtu/hr thermal output.

(d) In the calculation of $(\text{Heat Input})_{avg}$, use Q_{ref}, the average volumetric flow rate measured by the reference method during the RATA, and use the average diluent gas concentration measured during the flow RATA (i.e., the arithmetic average of the diluent gas concentrations for all clock hours in which a RATA run was performed).

7.8 Flow-to-Load Test Exemptions

(a) For complex stack configuations (e.g., when the effluent from a unit is divided and discharges through multiple stacks in such a manner that the flow rate in the individual stacks cannot be correlated with unit load), the owner or operator may petition the Administrator under §75.66 for an exemption from the requirements of section 7.7 of this appendix and section 2.2.5 fo appendix B to this part. The petition must include sufficient information and data to demonstrate that a flow-to-load or gross heat rate evaluation is infeasible for the complex stack configuration.

(b) Units that do not produce electrical output (in megawatts) or thermal output (in klb of steam per hour) are exempted from the flow-to-load ratio test requirements of section 7.7 of this appendix and section 2.2.5 of appendix B to this part.

FIGURE 1 TO APPENDIX A—LINEARITY ERROR DETERMINATION

Day	Date and time	Reference value	Monitor value	Difference	Percent of reference value
Low-level:					
Mid-level:					
High-level:					

FIGURE 1 TO APPENDIX A—LINEARITY ERROR DETERMINATION—Continued

Day	Date and time	Reference value	Monitor value	Difference	Percent of reference value

FIGURE 2 TO APPENDIX A—RELATIVE ACCURACY DETERMINATION (POLLUTANT CONCENTRATION MONITORS)

Run No.	Date and time	SO_2 (ppm [c])			Date and time	CO_2 (Pollutant) (ppm [c])		
		RM [a]	M [b]	Diff		RM [a]	M [b]	Diff
1.								
2.								
3.								
4.								
5.								
6.								
7.								
8.								
9.								
10.								
11.								
12.								
Arithmetic Mean Difference (Eq. A–7). Confidence Coefficient (Eq. A–9). Relative Accuracy (Eq. A–10).								

[a] RM means "reference method data."
[b] M means "monitor data."
[c] Make sure the RM and M data are on a consistent basis, either wet or dry.

FIGURE 3 TO APPENDIX A—RELATIVE ACCURACY DETERMINATION (FLOW MONITORS)

Run No.	Date and time	Flow rate (Low) (scf/hr)*			Date and time	Flow rate (Normal) (scf/hr)*			Date and time	Flow rate (High) (scf/hr)*		
		RM	M	Diff		RM	M	Diff		RM	M	Diff
1.												
2.												
3.												
4.												
5.												
6.												
7.												
8.												
9.												
10.												
11.												

FIGURE 3 TO APPENDIX A—RELATIVE ACCURACY DETERMINATION (FLOW MONITORS)—Continued

Run No.	Date and time	Flow rate (Low) (scf/hr)*			Date and time	Flow rate (Normal) (scf/hr)*			Date and time	Flow rate (High) (scf/hr)*		
		RM	M	Diff		RM	M	Diff		RM	M	Diff
12.												
Arithmetic Mean Difference (Eq. A–7). Confidence Coefficient (Eq. A–9). Relative Accuracy (Eq. A–10).												

*Make sure the RM and M data are on a consistent basis, either wet or dry.

FIGURE 4 TO APPENDIX A—RELATIVE ACCURACY DETERMINATION (NO_X/DILUENT COMBINED SYSTEM)

Run No.	Date and time	Reference method data		NO_X system (lb/mmBtu)		
		NO_X( )[a]	O_2/CO_2%	RM	M	Difference
1.						
2.						
3.						
4.						
5.						
6.						
7.						
8.						
9.						
10.						
11.						
12.						
Arithmetic Mean Difference (Eq. A–7). Confidence Coefficient (Eq. A–9). Relative Accuracy (Eq. A–10).						

[a] Specify units: ppm, lb/dscf, mg/dscm.

FIGURE 5—CYCLE TIME

Date of test _____
Component/system ID#: _____
Analyzer type _____
Serial Number _____
High level gas concentration: _____ ppm/% (circle one)
Zero level gas concentration: _____ ppm/% (circle one)
Analyzer span setting: _____ ppm/% (circle one)
Upscale:
Stable starting monitor value: _____ ppm/% (circle one)
Stable ending monitor reading: _____ ppm/% (circle one)
Elapsed time: _____ seconds
Downscale:
Stable starting monitor value: _____ ppm/% (circle one)
Stable ending monitor value: _____ ppm/% (circle one)
Elapsed time: _____ seconds
Component cycle time= _____ seconds
System cycle time= _____ seconds

Figure 6a. Upscale Cycle Time Test

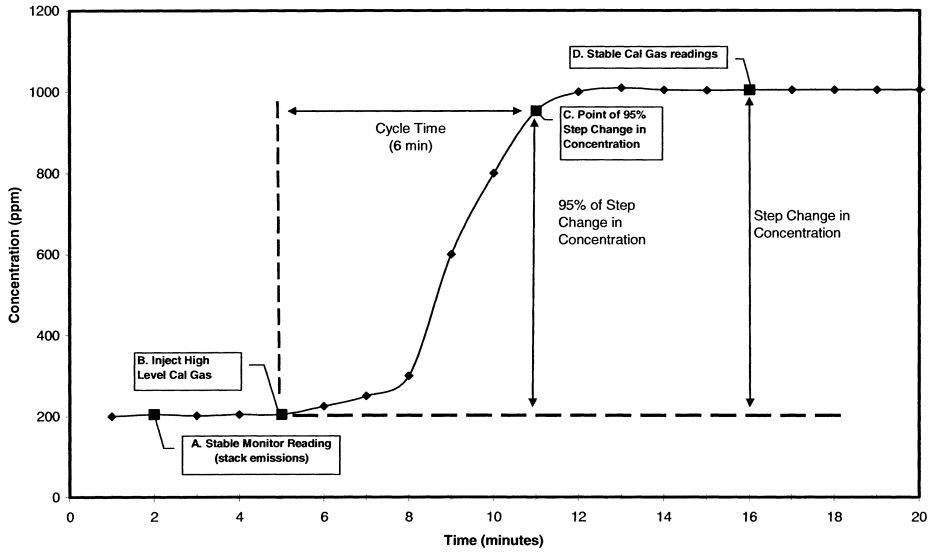

Figure 6b. Downscale Cycle Time Test

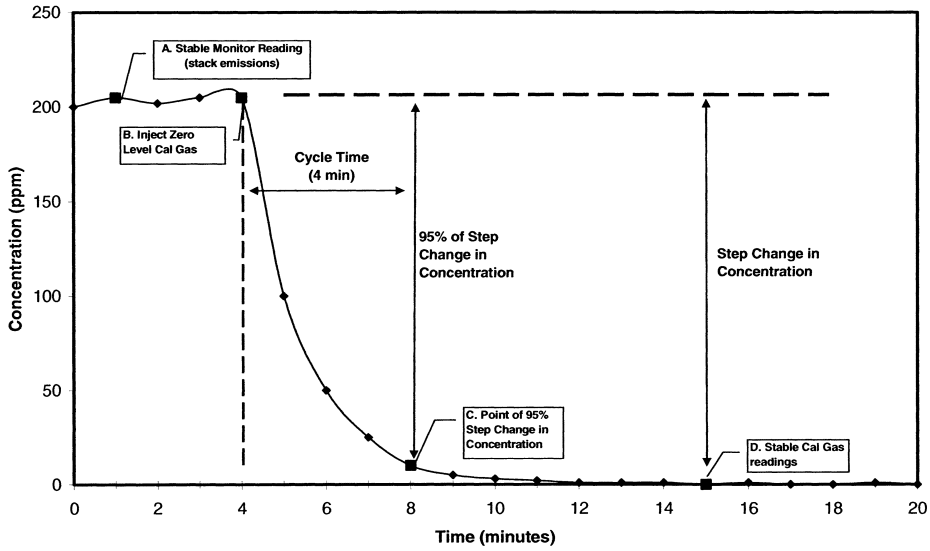

A. To determine the upscale cycle time (Figure 6a), measure the flue gas emissions until the response stabilizes. Record the stabilized value (see section 6.4 of this appendix for the stability criteria).

B. Inject a high-level calibration gas into the port leading to the calibration cell or thimble (Point B). Allow the analyzer to stabilize. Record the stabilized value.

C. Determine the step change. The step change is equal to the difference between the

final stable calibration gas value (Point D) and the stabilized stack emissions value (Point A).

D. Take 95% of the step change value and add the result to the stabilized stack emissions value (Point A). Determine the time at which 95% of the step change occurred (Point C).

E. Calculate the upscale cycle time by subtracting the time at which the calibration gas was injected (Point B) from the time at which 95% of the step change occurred (Point C). In this example, upscale cycle time = (11 − 5) = 6 minutes.

F. To determine the downscale cycle time (Figure 6b) repeat the procedures above, except that a zero gas is injected when the flue gas emissions have stabilized, and 95% of the step change in concentration is subtracted from the stabilized stack emissions value.

G. Compare the upscale and downscale cycle time values. The longer of these two times is the cycle time for the analyzer.

[58 FR 3701, Jan. 11, 1993, as amended at 60 FR 26541–26546, 26569–26570, May 17, 1995; 61 FR 25582, May 22, 1996; 61 FR 59162, Nov. 20, 1996; 63 FR 57512, Oct. 27, 1998; 64 FR 28631–28643, May 26, 1999; 64 FR 37582, July 12, 1999; 67 FR 40448, 40449, 40452, 40453, 40455, June 12, 2002; 67 FR 53505, Aug. 16, 2002; 70 FR 28690, May 18, 2005; 72 FR 51528, Sept. 7, 2007; 73 FR 4363, Jan. 24, 2008]

EFFECTIVE DATE NOTE: At 73 FR 65556, Nov. 4, 2008, the effectiveness of Section 6.1.2(a) through (c) is stayed indefinitely.

APPENDIX B TO PART 75—QUALITY ASSURANCE AND QUALITY CONTROL PROCEDURES

1. QUALITY ASSURANCE/QUALITY CONTROL PROGRAM

Develop and implement a quality assurance/quality control (QA/QC) program for the continuous emission monitoring systems, excepted monitoring systems approved under appendix D or E to this part, and alternative monitoring systems under subpart E of this part, and their components. At a minimum, include in each QA/QC program a written plan that describes in detail (or that refers to separate documents containing) complete, step-by-step procedures and operations for each of the following activities. Upon request from regulatory authorities, the source shall make all procedures, maintenance records, and ancillary supporting documentation from the manufacturer (e.g., software coefficients and troubleshooting diagrams) available for review during an audit. Electronic storage of the information in the QA/QC plan is permissible, provided that the information can be made available in hardcopy upon request during an audit.

1.1 Requirements for All Monitoring Systems

1.1.1 Preventive Maintenance

Keep a written record of procedures needed to maintain the monitoring system in proper operating condition and a schedule for those procedures. This shall, at a minimum, include procedures specified by the manufacturers of the equipment and, if applicable, additional or alternate procedures developed for the equipment.

1.1.2 Recordkeeping and Reporting

Keep a written record describing procedures that will be used to implement the recordkeeping and reporting requirements in subparts E, F, and G and appendices D and E to this part, as applicable.

1.1.3 Maintenance Records

Keep a record of all testing, maintenance, or repair activities performed on any monitoring system or component in a location and format suitable for inspection. A maintenance log may be used for this purpose. The following records should be maintained: date, time, and description of any testing, adjustment, repair, replacement, or preventive maintenance action performed on any monitoring system and records of any corrective actions associated with a monitor's outage period. Additionally, any adjustment that recharacterizes a system's ability to record and report emissions data must be recorded (e.g., changing of flow monitor or moisture monitoring system polynomial coefficients, K factors or mathematical algorithms, changing of temperature and pressure coefficients and dilution ratio settings), and a written explanation of the procedures used to make the adjustment(s) shall be kept.

1.1.4 The requirements in section 6.1.2 of appendix A to this part shall be met by any Air Emissions Testing Body (AETB) performing the semiannual/annual RATAs described in section 2.3 of this appendix and the Hg emission tests described in §§75.81(c) and 75.81(d)(4).

1.2 Specific Requirements for Continuous Emissions Monitoring Systems

1.2.1 Calibration Error Test and Linearity Check Procedures

Keep a written record of the procedures used for daily calibration error tests and linearity checks (e.g., how gases are to be injected, adjustments of flow rates and pressure, introduction of reference values, length of time for injection of calibration gases, steps for obtaining calibration error or error in linearity, determination of interferences, and when calibration adjustments should be made). Identify any calibration error test

and linearity check procedures specific to the continuous emission monitoring system that vary from the procedures in appendix A to this part.

1.2.2 Calibration and Linearity Adjustments

Explain how each component of the continuous emission monitoring system will be adjusted to provide correct responses to calibration gases, reference values, and/or indications of interference both initially and after repairs or corrective action. Identify equations, conversion factors and other factors affecting calibration of each continuous emission monitoring system.

1.2.3 Relative Accuracy Test Audit Procedures

Keep a written record of procedures and details peculiar to the installed continuous emission monitoring systems that are to be used for relative accuracy test audits, such as sampling and analysis methods.

1.2.4 Parametric Monitoring for Units With Add-on Emission Controls

The owner or operator shall keep a written (or electronic) record including a list of operating parameters for the add-on SO_2 or NO_X emission controls, including parameters in §75.55(b) or §75.58(b), as applicable, and the range of each operating parameter that indicates the add-on emission controls are operating properly. The owner or operator shall keep a written (or electronic) record of the parametric monitoring data during each SO_2 or NO_X missing data period.

1.3 Specific Requirements for Excepted Systems Approved Under Appendices D and E

1.3.1 Fuel Flowmeter Accuracy Test Procedures

Keep a written record of the specific fuel flowmeter accuracy test procedures. These may include: standard methods or specifications listed in and of appendix D to this part and incorporated by reference under §75.6; the procedures of sections 2.1.5.2 or 2.1.7 of appendix D to this part; or other methods approved by the Administrator through the petition process of §75.66(c).

1.3.2 Transducer or Transmitter Accuracy Test Procedures

Keep a written record of the procedures for testing the accuracy of transducers or transmitters of an orifice-, nozzle-, or venturi-type fuel flowmeter under section 2.1.6 of appendix D to this part. These procedures should include a description of equipment used, steps in testing, and frequency of testing.

1.3.3 Fuel Flowmeter, Transducer, or Transmitter Calibration and Maintenance Records

Keep a record of adjustments, maintenance, or repairs performed on the fuel flowmeter monitoring system. Keep records of the data and results for fuel flowmeter accuracy tests and transducer accuracy tests, consistent with appendix D to this part.

1.3.4 Primary Element Inspection Procedures

Keep a written record of the standard operating procedures for inspection of the primary element (i.e., orifice, venturi, or nozzle) of an orifice-, venturi-, or nozzle-type fuel flowmeter. Examples of the types of information to be included are: what to examine on the primary element; how to identify if there is corrosion sufficient to affect the accuracy of the primary element; and what inspection tools (e.g., baroscope), if any, are used.

1.3.5 Fuel Sampling Method and Sample Retention

Keep a written record of the standard procedures used to perform fuel sampling, either by utility personnel or by fuel supply company personnel. These procedures should specify the portion of the ASTM method used, as incorporated by reference under §75.6, or other methods approved by the Administrator through the petition process of §75.66(c). These procedures should describe safeguards for ensuring the availability of an oil sample (e.g., procedure and location for splitting samples, procedure for maintaining sample splits on site, and procedure for transmitting samples to an analytical laboratory). These procedures should identify the ASTM analytical methods used to analyze sulfur content, gross calorific value, and density, as incorporated by reference under §75.6, or other methods approved by the Administrator through the petition process of §75.66(c).

1.3.6 Appendix E Monitoring System Quality Assurance Information

Identify the recommended range of quality assurance- and quality control-related operating parameters. Keep records of these operating parameters for each hour of unit operation (i.e., fuel combustion). Keep a written record of the procedures used to perform NO_X emission rate testing. Keep a copy of all data and results from the initial and from the most recent NO_X emission rate testing, including the values of quality assurance parameters specified in section 2.3 of appendix E to this part.

1.4 Requirements for Alternative Systems Approved Under Subpart E

1.4.1 Daily Quality Assurance Tests

Explain how the daily assessment procedures specific to the alternative monitoring system are to be performed.

1.4.2 Daily Quality Assurance Test Adjustments

Explain how each component of the alternative monitoring system will be adjusted in response to the results of the daily assessments.

1.4.3 Relative Accuracy Test Audit Procedures

Keep a written record of procedures and details peculiar to the installed alternative monitoring system that are to be used for relative accuracy test audits, such as sampling and analysis methods.

1.5 Requirements for Sorbent Trap Monitoring Systems

1.5.1 Sorbent Trap Identification and Tracking

Include procedures for inscribing or otherwise permanently marking a unique identification number on each sorbent trap, for tracking purposes. Keep records of the ID of the monitoring system in which each sorbent trap is used, and the dates and hours of each Hg collection period.

1.5.2 Monitoring System Integrity and Data Quality

Explain the procedures used to perform the leak checks when sorbent traps are placed in service and removed from service. Also explain the other QA procedures used to ensure system integrity and data quality, including, but not limited to, gas flow meter calibrations, verification of moisture removal, and ensuring air-tight pump operation. In addition, the QA plan must include the data acceptance and quality control criteria in section 8 of appendix K to this part. All reference meters used to calibrate the gas flow meters (e.g., wet test meters) shall be periodically recalibrated. Annual, or more frequent, recalibration is recommended. If a NIST–traceable calibration device is used as a reference flow meter, the QA plan must include a protocol for ongoing maintenance and periodic recalibration to maintain the accuracy and NIST–traceability of the calibrator.

1.5.3 Hg Analysis

Explain the chain of custody employed in packing, transporting, and analyzing the sorbent traps (see sections 7.2.8 and 7.2.9 in appendix K to this part). Keep records of all Hg analyses. The analyses shall be performed in accordance with the procedures described in section 10 of appendix K to this part.

1.5.4 Laboratory Certification

The QA Plan shall include documentation that the laboratory performing the analyses on the carbon sorbent traps is certified by the International Organization for Standardization (ISO) to have a proficiency that meets the requirements of ISO 17025. Alternatively, if the laboratory performs the spike recovery study described in section 10.3 of appendix K to this part and repeats that procedure annually, ISO certification is not required.

1.5.5 Data Collection Period

State, and provide the rationale for, the minimum acceptable data collection period (*e.g.*, one day, one week, etc.) for the size of sorbent trap selected for the monitoring. Include in the discussion such factors as the Hg concentration in the stack gas, the capacity of the sorbent trap, and the minimum mass of Hg required for the analysis.

1.5.6 Relative Accuracy Test Audit Procedures

Keep records of the procedures and details peculiar to the sorbent trap monitoring systems that are to be followed for relative accuracy test audits, such as sampling and analysis methods.

2. FREQUENCY OF TESTING

A summary chart showing each quality assurance test and the frequency at which each test is required is located at the end of this appendix in Figure 1.

2.1 Daily Assessments

Perform the following daily assessments to quality-assure the hourly data recorded by the monitoring systems during each period of unit operation, or, for a bypass stack or duct, each period in which emissions pass through the bypass stack or duct. These requirements are effective as of the date when the monitor or continuous emission monitoring system completes certification testing.

2.1.1 Calibration Error Test

Except as provided in section 2.1.1.2 of this appendix, perform the daily calibration error test of each gas monitoring system (including moisture monitoring systems consisting of wet- and dry-basis O_2 analyzers) according to the procedures in section 6.3.1 of appendix A to this part, and perform the daily calibration error test of each flow monitoring system according to the procedure in section 6.3.2 of appendix A to this part. When two measurement ranges (low and high) are required for a particular parameter, perform

sufficient calibration error tests on each range to validate the data recorded on that range, according to the criteria in section 2.1.5 of this appendix.

2.1.1.1 On-line Daily Calibration Error Tests. Except as provided in section 2.1.1.2 of this appendix, all daily calibration error tests must be performed while the unit is in operation at normal, stable conditions (i.e. ''on-line'').

2.1.1.2 Off-line Daily Calibration Error Tests. Daily calibrations may be performed while the unit is not operating (i.e., ''off-line'') and may be used to validate data for a monitoring system that meets the following conditions:

(1) An initial demonstration test of the monitoring system is successfully completed and the results are reported in the quarterly report required under §75.64 of this part. The initial demonstration test, hereafter called the ''off-line calibration demonstration'', consists of an off-line calibration error test followed by an on-line calibration error test. Both the off-line and on-line portions of the off-line calibration demonstration must meet the calibration error performance specification in section 3.1 of appendix A of this part. Upon completion of the off-line portion of the demonstration, the zero and upscale monitor responses may be adjusted, but only toward the true values of the calibration gases or reference signals used to perform the test and only in accordance with the routine calibration adjustment procedures specified in the quality control program required under section 1 of appendix B to this part. Once these adjustments are made, no further adjustments may be made to the monitoring system until after completion of the on-line portion of the off-line calibration demonstration. Within 26 clock hours of the completion hour of the off-line portion of the demonstration, the monitoring system must successfully complete the first attempted calibration error test, i.e., the on-line portion of the demonstration.

(2) For each monitoring system that has passed the off-line calibration demonstration, off-line calibration error tests may be used on a limited basis to validate data, in accordance with paragraph (2) in section 2.1.5.1 of this appendix.

2.1.2 Daily Flow Interference Check

Perform the daily flow monitor interference checks specified in section 2.2.2.2 of appendix A of this part while the unit is in operation at normal, stable conditions.

2.1.3 Additional Calibration Error Tests and Calibration Adjustments

(a) In addition to the daily calibration error tests required under section 2.1.1 of this appendix, a calibration error test of a monitor shall be performed in accordance with section 2.1.1 of this appendix, as follows: whenever a daily calibration error test is failed; whenever a monitoring system is returned to service following repair or corrective maintenance that could affect the monitor's ability to accurately measure and record emissions data; or after making certain calibration adjustments, as described in this section. Except in the case of the routine calibration adjustments described in this section, data from the monitor are considered invalid until the required additional calibration error test has been successfully completed.

(b) Routine calibration adjustments of a monitor are permitted after any successful calibration error test. These routine adjustments shall be made so as to bring the monitor readings as close as practicable to the known tag values of the calibration gases or to the actual value of the flow monitor reference signals. An additional calibration error test is required following routine calibration adjustments where the monitor's calibration has been physically adjusted (e.g., by turning a potentiometer) to verify that the adjustments have been made properly. An additional calibration error test is not required, however, if the routine calibration adjustments are made by means of a mathematical algorithm programmed into the data acquisition and handling system. The EPA recommends that routine calibration adjustments be made, at a minimum, whenever the daily calibration error exceeds the limits of the applicable performance specification in appendix A to this part for the pollutant concentration monitor, CO_2 or O_2 monitor, or flow monitor.

(c) Additional (non-routine) calibration adjustments of a monitor are permitted prior to (but not during) linearity checks and RATAs and at other times, provided that an appropriate technical justification is included in the quality control program required under section 1 of this appendix. The allowable non-routine adjustments are as follows. The owner or operator may physically adjust the calibration of a monitor (e.g., by means of a potentiometer), provided that the post-adjustment zero and upscale responses of the monitor are within the performance specifications of the instrument given in section 3.1 of appendix A to this part. An additional calibration error test is required following such adjustments to verify that the monitor is operating within the performance specifications at both the zero and upscale calibration levels.

2.1.4 Data Validation

(a) An out-of-control period occurs when the calibration error of an SO_2 or NO_X pollutant concentration monitor exceeds 5.0 percent of the span value, when the calibration error of a CO_2 or O_2 monitor (including O_2

monitors used to measure CO_2 emissions or percent moisture) exceeds 1.0 percent CO_2 or O_2, or when the calibration error of a flow monitor or a moisture sensor exceeds 6.0 percent of the span value, which is twice the applicable specification of appendix A to this part. Notwithstanding, a differential pressure-type flow monitor for which the calibration error exceeds 6.0 percent of the span value shall not be considered out-of-control if |R–A|, the absolute value of the difference between the monitor response and the reference value in Equation A–6 of appendix A to this part, is < 0.02 inches of water. In addition, an SO_2 or NO_X monitor for which the calibration error exceeds 5.0 percent of the span value shall not be considered out-of-control if |RA| in Equation A–6 does not exceed 5.0 ppm (for span values ≤ 50 ppm), or if |R–A| does not exceed 10.0 ppm (for span values > 50 ppm, but ≤ 200 ppm). For a Hg monitor, an out-of-control period occurs when the calibration error exceeds 5.0% of the span value. Notwithstanding, the Hg monitor shall not be considered out-of-control if |R–A| in Equation A–6 does not exceed 1.0 μgm/scm. The out-of-control period begins upon failure of the calibration error test and ends upon completion of a successful calibration error test. Note, that if a failed calibration, corrective action, and successful calibration error test occur within the same hour, emission data for that hour recorded by the monitor after the successful calibration error test may be used for reporting purposes, provided that two or more valid readings are obtained as required by §75.10. A NO_X-diluent CEMS is considered out-of-control if the calibration error of either component monitor exceeds twice the applicable performance specification in appendix A to this part. Emission data shall not be reported from an out-of-control monitor.

(b) An out-of-control period also occurs whenever interference of a flow monitor is identified. The out-of-control period begins with the hour of completion of the failed interference check and ends with the hour of completion of an interference check that is passed.

2.1.5 Quality Assurance of Data With Respect to Daily Assessments

When a monitoring system passes a daily assessment (i.e., daily calibration error test or daily flow interference check), data from that monitoring system are prospectively validated for 26 clock hours (i.e., 24 hours plus a 2-hour grace period) beginning with the hour in which the test is passed, unless another assessment (i.e. a daily calibration error test, an interference check of a flow monitor, a quarterly linearity check, a quarterly leak check, or a relative accuracy test audit) is failed within the 26-hour period.

2.1.5.1 Data Invalidation with Respect to Daily Assessments. The following specific rules apply to the invalidation of data with respect to daily assessments:

(1) Data from a monitoring system are invalid, beginning with the first hour following the expiration of a 26-hour data validation period or beginning with the first hour following the expiration of an 8-hour start-up grace period (as provided under section 2.1.5.2 of this appendix), if the required subsequent daily assessment has not been conducted.

(2) For a monitor that has passed the off-line calibration demonstration, a combination of on-line and off-line calibration error tests may be used to validate data from the monitor, as follows. For a particular unit (or stack) operating hour, data from a monitor may be validated using a successful off-line calibration error test if: (a) An on-line calibration error test has been passed within the previous 26 unit (or stack) operating hours; and (b) the 26 clock hour data validation window for the off-line calibration error test has not expired. If either of these conditions is not met, then the data from the monitor are invalid with respect to the daily calibration error test requirement. Data from the monitor shall remain invalid until the appropriate on-line or off-line calibration error test is successfully completed so that both conditions (a) and (b) are met.

(3) For units with two measurement ranges (low and high) for a particular parameter, when separate analyzers are used for the low and high ranges, a failed or expired calibration on one of the ranges does not affect the quality-assured data status on the other range. For a dual-range analyzer (i.e., a single analyzer with two measurement scales), a failed calibration error test on either the low or high scale results in an out-of-control period for the monitor. Data from the monitor remain invalid until corrective actions are taken and ''hands-off'' calibration error tests have been passed on both ranges. However, if the most recent calibration error test on the high scale was passed but has expired, while the low scale is up-to-date on its calibration error test requirements (or vice-versa), the expired calibration error test does not affect the quality-assured status of the data recorded on the other scale.

2.1.5.2 Daily Assessment Start-Up Grace Period. For the purpose of quality assuring data with respect to a daily assessment (i.e. a daily calibration error test or a flow interference check), a start-up grace period may apply when a unit begins to operate after a period of non-operation. The start-up grace period for a daily calibration error test is independent of the start-up grace period for a daily flow interference check. To qualify for a start-up grace period for a daily assessment, there are two requirements:

(1) The unit must have resumed operation after being in outage for 1 or more hours

(i.e., the unit must be in a start-up condition) as evidenced by a change in unit operating time from zero in one clock hour to an operating time greater than zero in the next clock hour.

(2) For the monitoring system to be used to validate data during the grace period, the previous daily assessment of the same kind must have been passed on-line within 26 clock hours prior to the last hour in which the unit operated before the outage. In addition, the monitoring system must be in-control with respect to quarterly and semi-annual or annual assessments.

If both of the above conditions are met, then a start-up grace period of up to 8 clock hours applies, beginning with the first hour of unit operation following the outage. During the start-up grace period, data generated by the monitoring system are considered quality-assured. For each monitoring system, a start-up grace period for a calibration error test or flow interference check ends when either: (1) a daily assessment of the same kind (i.e., calibration error test or flow interference check) is performed; or (2) 8 clock hours have elapsed (starting with the first hour of unit operation following the outage), whichever occurs first.

2.1.6 Data Recording

Record and tabulate all calibration error test data according to month, day, clock-hour, and magnitude in either ppm, percent volume, or scfh. Program monitors that automatically adjust data to the corrected calibration values (e.g., microprocessor control) to record either: (1) The unadjusted concentration or flow rate measured in the calibration error test prior to resetting the calibration, or (2) the magnitude of any adjustment. Record the following applicable flow monitor interference check data: (1) Sample line/sensing port pluggage, and (2) malfunction of each RTD, transceiver, or equivalent.

2.2 Quarterly Assessments

For each primary and redundant backup monitor or monitoring system, perform the following quarterly assessments. This requirement is applies as of the calendar quarter following the calendar quarter in which the monitor or continuous emission monitoring system is provisionally certified.

2.2.1 Linearity Check

Unless a particular monitor (or monitoring range) is exempted under this paragraph or under section 6.2 of appendix A to this part, perform a linearity check, in accordance with the procedures in section 6.2 of appendix A to this part, for each primary and redundant backup SO_2, Hg, and NO_X pollutant concentration monitor and each primary and redundant backup CO_2 or O_2 monitor (including O_2 monitors used to measure CO_2 emissions or to continuously monitor moisture) at least once during each QA operating quarter, as defined in §72.2 of this chapter. For Hg monitors, perform the linearity checks using elemental Hg standards. Alternatively, you may perform 3-level system integrity checks at the same three calibration gas levels (*i.e.*, low, mid, and high), using a NIST-traceable source of oxidized Hg. If you choose this option, the performance specification in section 3.2(c)(3) of appendix A to this part must be met at each gas level. For units using both a low and high span value, a linearity check is required only on the range(s) used to record and report emission data during the QA operating quarter. Conduct the linearity checks no less than 30 days apart, to the extent practicable. The data validation procedures in section 2.2.3(e) of this appendix shall be followed.

2.2.2 Leak Check

For differential pressure flow monitors, perform a leak check of all sample lines (a manual check is acceptable) at least once during each QA operating quarter. For this test, the unit does not have to be in operation. Conduct the leak checks no less than 30 days apart, to the extent practicable. If a leak check is failed, follow the applicable data validation procedures in section 2.2.3(g) of this appendix.

2.2.3 Data Validation

(a) A linearity check shall not be commenced if the monitoring system is operating out-of-control with respect to any of the daily or semiannual quality assurance assessments required by sections 2.1 and 2.3 of this appendix or with respect to the additional calibration error test requirements in section 2.1.3 of this appendix.

(b) Each required linearity check shall be done according to paragraph (b)(1), (b)(2) or (b)(3) of this section:

(1) The linearity check may be done ''cold,'' i.e., with no corrective maintenance, repair, calibration adjustments, re-linearization or reprogramming of the monitor prior to the test.

(2) The linearity check may be done after performing only the routine or non-routine calibration adjustments described in section 2.1.3 of this appendix at the various calibration gas levels (zero, low, mid or high), but no other corrective maintenance, repair, re-linearization or reprogramming of the monitor. Trial gas injection runs may be performed after the calibration adjustments and additional adjustments within the allowable limits in section 2.1.3 of this appendix may be made prior to the linearity check, as necessary, to optimize the performance of the monitor. The trial gas injections need not be

reported, provided that they meet the specification for trial gas injections in §75.20(b)(3)(vii)(E)(*1*). However, if, for any trial injection, the specification in §75.20(b)(3)(vii)(E)(*1*) is not met, the trial injection shall be counted as an aborted linearity check.

(3) The linearity check may be done after repair, corrective maintenance or reprogramming of the monitor. In this case, the monitor shall be considered out-of-control from the hour in which the repair, corrective maintenance or reprogramming is commenced until the linearity check has been passed. Alternatively, the data validation procedures and associated timelines in §§75.20(b)(3)(ii) through (ix) may be followed upon completion of the necessary repair, corrective maintenance, or reprogramming. If the procedures in §75.20(b)(3) are used, the words ''quality assurance'' apply instead of the word ''recertification''.

(c) Once a linearity check has been commenced, the test shall be done hands-off. That is, no adjustments of the monitor are permitted during the linearity test period, other than the routine calibration adjustments following daily calibration error tests, as described in section 2.1.3 of this appendix. If a routine daily calibration error test is performed and passed just prior to a linearity test (or during a linearity test period) and a mathematical correction factor is automatically applied by the DAHS, the correction factor shall be applied to all subsequent data recorded by the monitor, including the linearity test data.

(d) If a daily calibration error test is failed during a linearity test period, prior to completing the test, the linearity test must be repeated. Data from the monitor are invalidated prospectively from the hour of the failed calibration error test until the hour of completion of a subsequent successful calibration error test. The linearity test shall not be commenced until the monitor has successfully completed a calibration error test.

(e) An out-of-control period occurs when a linearity test is failed (i.e., when the error in linearity at any of the three concentrations in the quarterly linearity check (or any of the six concentrations, when both ranges of a single analyzer with a dual range are tested) exceeds the applicable specification in section 3.2 of appendix A to this part) or when a linearity test is aborted due to a problem with the monitor or monitoring system. For a NO_X-diluent continuous emission monitoring system, the system is considered out-of-control if either of the component monitors exceeds the applicable specification in section 3.2 of appendix A to this part or if the linearity test of either component is aborted due to a problem with the monitor. The out-of-control period begins with the hour of the failed or aborted linearity check and ends with the hour of completion of a satisfactory linearity check following corrective action and/or monitor repair, unless the option in paragraph (b)(3) of this section to use the data validation procedures and associated timelines in §75.20(b)(3)(ii) through (ix) has been selected, in which case the beginning and end of the out-of-control period shall be determined in accordance with §§75.20(b)(3)(vii)(A) and (B). For a dual-range analyzer, ''hands-off'' linearity checks must be passed on both measurement scales to end the out-of-control period. Note that a monitor shall not be considered out-of-control when a linearity test is aborted for a reason unrelated to the monitor's performance (e.g., a forced unit outage).

(f) No more than four successive calendar quarters shall elapse after the quarter in which a linearity check of a monitor or monitoring system (or range of a monitor or monitoring system) was last performed without a subsequent linearity test having been conducted. If a linearity test has not been completed by the end of the fourth calendar quarter since the last linearity test, then the linearity test must be completed within a 168 unit operating hour or stack operating hour ''grace period'' (as provided in section 2.2.4 of this appendix) following the end of the fourth successive elapsed calendar quarter, or data from the CEMS (or range) will become invalid.

(g) An out-of-control period also occurs when a flow monitor sample line leak is detected. The out-of-control period begins with the hour of the failed leak check and ends with the hour of a satisfactory leak check following corrective action.

(h) For each monitoring system, report the results of all completed and partial linearity tests that affect data validation (i.e., all completed, passed linearity checks; all completed, failed linearity checks; and all linearity checks aborted due to a problem with the monitor, including trial gas injections counted as failed test attempts under paragraph (b)(2) of this section or under §75.20(b)(3)(vii)(F)), in the quarterly report required under §75.64. Note that linearity attempts which are aborted or invalidated due to problems with the reference calibration gases or due to operational problems with the affected unit(s) need not be reported. Such partial tests do not affect the validation status of emission data recorded by the monitor. A record of all linearity tests, trial gas injections and test attempts (whether reported or not) must be kept on-site as part of the official test log for each monitoring system.

2.2.4 Linearity and Leak Check Grace Period

(a) When a required linearity test or flow monitor leak check has not been completed by the end of the QA operating quarter in

which it is due or if, due to infrequent operation of a unit or infrequent use of a required high range of a monitor or monitoring system, four successive calendar quarters have elapsed after the quarter in which a linearity check of a monitor or monitoring system (or range) was last performed without a subsequent linearity test having been done, the owner or operator has a grace period of 168 consecutive unit operating hours, as defined in §72.2 of this chapter (or, for monitors installed on common stacks or bypass stacks, 168 consecutive stack operating hours, as defined in §72.2 of this chapter) in which to perform a linearity test or leak check of that monitor or monitoring system (or range). The grace period begins with the first unit or stack operating hour following the calendar quarter in which the linearity test was due. Data validation during a linearity or leak check grace period shall be done in accordance with the applicable provisions in section 2.2.3 of this appendix.

(b) If, at the end of the 168 unit (or stack) operating hour grace period, the required linearity test or leak check has not been completed, data from the monitoring system (or range) shall be invalid, beginning with the first unit operating hour following the expiration of the grace period. Data from the monitoring system (or range) remain invalid until the hour of completion of a subsequent successful hands-off linearity test or leak check of the monitor or monitoring system (or range). Note that when a linearity test or a leak check is conducted within a grace period for the purpose of satisfying the linearity test or leak check requirement from a previous QA operating quarter, the results of that linearity test or leak check may only be used to meet the linearity check or leak check requirement of the previous quarter, not the quarter in which the missed linearity test or leak check is completed.

2.2.5 Flow-to-Load Ratio or Gross Heat Rate Evaluation

(a) *Applicability and methodology*. Unless exempted from the flow-to-load ratio test under section 7.8 of appendix A to this part, the owner or operator shall, for each flow rate monitoring system installed on each unit, common stack or multiple stack, evaluate the flow-to-load ratio quarterly, i.e., for each QA operating quarter (as defined in §72.2 of this chapter). At the end of each QA operating quarter, the owner or operator shall use Equation B–1 to calculate the flow-to-load ratio for every hour during the quarter in which: the unit (or combination of units, for a common stack) operated within ±10.0 percent of L_{avg}, the average load during the most recent normal-load flow RATA; and a quality-assured hourly average flow rate was obtained with a certified flow rate monitor. Alternatively, for the reasons stated in paragraphs (c)(1) through (c)(6) of this section, the owner or operator may exclude from the data analysis certain hours within ±10.0 percent of L_{avg} and may calculate R_h values for only the remaining hours.

$$R_h = \frac{Q_h}{L_h} \times 10^{-5} \qquad \text{(Eq. B-l)}$$

Where:

R_h = Hourly value of the flow-to-load ratio, scfh/megawatts, scfh/1000 lb/hr of steam, or scfh/(mmBtu/hr thermal output).

Q_h = Hourly stack gas volumetric flow rate, as measured by the flow rate monitor, scfh.

L_h = Hourly unit load, megawatts, 1000 lb/hr of steam, or mmBtu/hr thermal output; must be within + 10.0 percent of L_{avg} during the most recent normal-load flow RATA.

(1) In Equation B–1, the owner or operator may use either bias-adjusted flow rates or unadjusted flow rates, provided that all of the ratios are calculated the same way. For a common stack, L_h shall be the sum of the hourly operating loads of all units that discharge through the stack. For a unit that discharges its emissions through multiple stacks or that monitors its emissions in multiple breechings, Q_h will be either the combined hourly volumetric flow rate for all of the stacks or ducts (if the test is done on a unit basis) or the hourly flow rate through each stack individually (if the test is performed separately for each stack). For a unit with a multiple stack discharge configuration consisting of a main stack and a bypass stack, each of which has a certified flow monitor (e.g., a unit with a wet SO_2 scrubber), calculate the hourly flow-to-load ratios separately for each stack. Round off each value of R_h to two decimal places.

(2) Alternatively, the owner or operator may calculate the hourly gross heat rates (GHR) in lieu of the hourly flow-to-load ratios. The hourly GHR shall be determined only for those hours in which quality-assured flow rate data and diluent gas (CO_2 or O_2) concentration data are both available

from a certified monitor or monitoring system or reference method. If this option is selected, calculate each hourly GHR value as follows:

$$(GHR)_h = \frac{(\text{Heat Input})_h}{L_h} \times 1000 \qquad \text{(Eq. B-1a)}$$

where:

$(GHR)_h$ = Hourly value of the gross heat rate, Btu/kwh, Btu/lb steam load, or 1000 mmBtu heat input/mmBtu thermal output.

$(\text{Heat Input})_h$ = Hourly heat input, as determined from the quality-assured flow rate and diluent data, using the applicable equation in appendix F to this part, mmBtu/hr.

L_h = Hourly unit load, megawatts, 1000 lb/hr of steam, or mmBtu/hr thermal output; must be within + 10.0 percent of L_{avg} during the most recent normal-load flow RATA.

(3) In Equation B–1a, the owner or operator may either use bias-adjusted flow rates or unadjusted flow rates in the calculation of $(\text{Heat Input})_h$, provided that all of the heat input rate values are determined in the same manner.

(4) The owner or operator shall evaluate the calculated hourly flow-to-load ratios (or gross heat rates) as follows. A separate data analysis shall be performed for each primary and each redundant backup flow rate monitor used to record and report data during the quarter. Each analysis shall be based on a minimum of 168 acceptable recorded hourly average flow rates (i.e., at loads within ±10 percent of L_{avg}). When two RATA load levels are designated as normal, the analysis shall be performed at the higher load level, unless there are fewer than 168 acceptable data points available at that load level, in which case the analysis shall be performed at the lower load level. If, for a particular flow monitor, fewer than 168 acceptable hourly flow-to-load ratios (or GHR values) are available at any of the load levels designated as normal, a flow-to-load (or GHR) evaluation is not required for that monitor for that calendar quarter.

(5) For each flow monitor, use Equation B–2 in this appendix to calculate E_h, the absolute percentage difference between each hourly R_h value and R_{ref}, the reference value of the flow-to-load ratio, as determined in accordance with section 7.7 of appendix A to this part. Note that R_{ref} shall always be based upon the most recent normal-load RATA, even if that RATA was performed in the calendar quarter being evaluated.

$$E_h = \frac{|R_{ref} - R_h|}{R_{ref}} \times 100 \qquad \text{(Eq. B-2)}$$

where:

E_h = Absolute percentage difference between the hourly average flow-to-load ratio and the reference value of the flow-to-load ratio at normal load.

R_h = The hourly average flow-to-load ratio, for each flow rate recorded at a load level within ±10.0 percent of L_{avg}.

R_{ref} = The reference value of the flow-to-load ratio from the most recent normal-load flow RATA, determined in accordance with section 7.7 of appendix A to this part.

(6) Equation B–2 shall be used in a consistent manner. That is, use R_{ref} and R_h if the flow-to-load ratio is being evaluated, and use $(GHR)_{ref}$ and $(GHR)_h$ if the gross heat rate is being evaluated. Finally, calculate E_f, the arithmetic average of all of the hourly E_h values. The owner or operator shall report the results of each quarterly flow-to-load (or gross heat rate) evaluation, as determined from Equation B–2, in the electronic quarterly report required under § 75.64.

(b) *Acceptable results.* The results of a quarterly flow-to-load (or gross heat rate) evaluation are acceptable, and no further action is required, if the calculated value of E_f is less than or equal to: (1) 15.0 percent, if L_{avg} for the most recent normal-load flow RATA is ≥60 megawatts (or ≥500 klb/hr of steam) and if unadjusted flow rates were used in the calculations; or (2) 10.0 percent, if L_{avg} for the most recent normal-load flow RATA is ≥60 megawatts (or ≥500 klb/hr of steam) and if bias-adjusted flow rates were used in the calculations; or (3) 20.0 percent, if L_{avg} for the most recent normal-load flow RATA is <60 megawatts (or <500 klb/hr of steam) and if unadjusted flow rates were used in the calculations; or (4) 15.0 percent, if L_{avg} for the

most recent normal-load flow RATA is <60 megawatts (or <500 klb/hr of steam) and if bias-adjusted flow rates were used in the calculations. If E_f is above these limits, the owner or operator shall either: implement Option 1 in section 2.2.5.1 of this appendix; or perform a RATA in accordance with Option 2 in section 2.2.5.2 of this appendix; or re-examine the hourly data used for the flow-to-load or GHR analysis and recalculate E_f, after excluding all non-representative hourly flow rates. If E_f is above these limits, the owner or operator shall either: implement Option 1 in section 2.2.5.1 of this appendix; perform a RATA in accordance with Option 2 in section 2.2.5.2 of this appendix; or (if applicable) re-examine the hourly data used for the flow-to-load or GHR analysis and recalculate E_f, after excluding all non-representative hourly flow rates, as provided in paragraph (c) of this section.

(c) *Recalculation of E_f.* If the owner or operator did not exclude any hours within ±10 percent of L_{avg} from the original data analysis and chooses to recalculate E_f, the flow rates for the following hours are considered non-representative and may be excluded from the data analysis:

(1) Any hour in which the type of fuel combusted was different from the fuel burned during the most recent normal-load RATA. For purposes of this determination, the type of fuel is different if the fuel is in a different state of matter (i.e., solid, liquid, or gas) than is the fuel burned during the RATA or if the fuel is a different classification of coal (e.g., bituminous versus sub-bituminous). Also, for units that co-fire different types of fuels, if the reference RATA was done while co-firing, then hours in which a single fuel was combusted may be excluded from the data analysis as different fuel hours (and vice-versa for co-fired hours, if the reference RATA was done while combusting only one type of fuel);

(2) For a unit that is equipped with an SO_2 scrubber and which always discharges its flue gases to the atmosphere through a single stack, any hour in which the SO_2 scrubber was bypassed;

(3) Any hour in which ''ramping'' occurred, i.e., the hourly load differed by more than ±15.0 percent from the load during the preceding hour or the subsequent hour;

(4) For a unit with a multiple stack discharge configuration consisting of a main stack and a bypass stack, any hour in which the flue gases were discharged through both stacks;

(5) If a normal-load flow RATA was performed and passed during the quarter being analyzed, any hour prior to completion of that RATA; and

(6) If a problem with the accuracy of the flow monitor was discovered during the quarter and was corrected (as evidenced by passing the abbreviated flow-to-load test in section 2.2.5.3 of this appendix), any hour prior to completion of the abbreviated flow-to-load test.

(7) After identifying and excluding all non-representative hourly data in accordance with paragraphs (c)(1) through (6) of this section, the owner or operator may analyze the remaining data a second time. At least 168 representative hourly ratios or GHR values must be available to perform the analysis; otherwise, the flow-to-load (or GHR) analysis is not required for that monitor for that calendar quarter.

(8) If, after re-analyzing the data, E_f meets the applicable limit in paragraph (b)(1), (b)(2), (b)(3), or (b)(4) of this section, no further action is required. If, however, E_f is still above the applicable limit, data from the monitor shall be declared out-of-control, beginning with the first unit operating hour following the quarter in which E_f exceeded the applicable limit. Alternatively, if a probationary calibration error test is performed and passed according to §75.20(b)(3)(ii), data from the monitor may be declared conditionally valid following the quarter in which E_f exceeded the applicable limit. The owner or operator shall then either implement Option 1 in section 2.2.5.1 of this appendix or Option 2 in section 2.2.5.2 of this appendix.

2.2.5.1 Option 1

Within 14 unit operating days of the end of the calendar quarter for which the E_f value is above the applicable limit, investigate and troubleshoot the applicable flow monitor(s). Evaluate the results of each investigation as follows:

(a) If the investigation fails to uncover a problem with the flow monitor, a RATA shall be performed in accordance with Option 2 in section 2.2.5.2 of this appendix.

(b) If a problem with the flow monitor is identified through the investigation (including the need to re-linearize the monitor by changing the polynomial coefficients or K factor(s)), data from the monitor are considered invalid back to the first unit operating hour after the end of the calendar quarter for which E_f was above the applicable limit. If the option to use conditional data validation was selected under section 2.2.5(c)(8) of this appendix, all conditionally valid data shall be invalidated, back to the first unit operating hour after the end of the calendar quarter for which E_f was above the applicable limit. Corrective actions shall be taken. All corrective actions (*e.g.*, non-routine maintenance, repairs, major component replacements, re-linearization of the monitor, etc.) shall be documented in the operation and maintenance records for the monitor. The owner or operator then shall either complete the abbreviated flow-to-load test in section 2.2.5.3 of this appendix, or, if the corrective action taken has required relinearization of the flow monitor, shall

perform a 3-load RATA. The conditional data validation procedures in §75.20(b)(3) may be applied to the 3-load RATA.

2.2.5.2 Option 2

Perform a single-load RATA (at a load designated as normal under section 6.5.2.1 of appendix A to this part) of each flow monitor for which E_f is outside of the applicable limit. If the RATA is passed hands-off, in accordance with section 2.3.2(c) of this appendix, no further action is required and the out-of-control period for the monitor ends at the date and hour of completion of a successful RATA, unless the option to use conditional data validation was selected under section 2.2.5(c)(8) of this appendix. In that case, all conditionally valid data from the monitor are considered to be quality-assured, back to the first unit operating hour following the end of the calendar quarter for which the E_f value was above the applicable limit. If the RATA is failed, all data from the monitor shall be invalidated, back to the first unit operating hour following the end of the calendar quarter for which the E_f value was above the applicable limit. Data from the monitor remain invalid until the required RATA has been passed. Alternatively, following a failed RATA and corrective actions, the conditional data validation procedures of §75.20(b)(3) may be used until the RATA has been passed. If the corrective actions taken following the failed RATA included adjustment of the polynomial coefficients or K-factor(s) of the flow monitor, a 3-level RATA is required, except as otherwise specified in section 2.3.1.3 of this appendix.

2.2.5.3 Abbreviated Flow-to-Load Test

(a) The following abbreviated flow-to-load test may be performed after any documented repair, component replacement, or other corrective maintenance to a flow monitor (except for changes affecting the linearity of the flow monitor, such as adjusting the flow monitor coefficients or K factor(s)) to demonstrate that the repair, replacement, or other maintenance has not significantly affected the monitor's ability to accurately measure the stack gas volumetric flow rate. Data from the monitoring system are considered invalid from the hour of commencement of the repair, replacement, or maintenance until either the hour in which the abbraviated flow-to-load test is passed, or the hour in which a probationary calibration error test is passed following completion of the repair, replacement, or maintenance and any associated adjustments to the monitor. If the latter option is selected, the abbreviated flow-to-load test shall be completed within 168 unit operating hours of the probationary calibration error test (or, for peaking units, within 30 unit operating days, if that is less restrictive). Data from the monitor are considered to be conditionally valid (as defined in §72.2 of this chapter), beginning with the hour of the probationary calibration error test.

(b) Operate the unit(s) in such a way as to reproduce, as closely as practicable, the exact conditions at the time of the most recent normal-load flow RATA. To achieve this, it is recommended that the load be held constant to within ±10.0 percent of the average load during the RATA and that the diluent gas (CO_2 or O_2) concentration be maintained within ±0.5 percent CO_2 or O_2 of the average diluent concentration during the RATA. For common stacks, to the extent practicable, use the same combination of units and load levels that were used during the RATA. When the process parameters have been set, record a minimum of six and a maximum of 12 consecutive hourly average flow rates, using the flow monitor(s) for which E_f was outside the applicable limit. For peaking units, a minimum of three and a maximum of 12 consecutive hourly average flow rates are required. Also record the corresponding hourly load values and, if applicable, the hourly diluent gas concentrations. Calculate the flow-to-load ratio (or GHR) for each hour in the test hour period, using Equation B–1 or B–1a. Determine E_h for each hourly flow-to-load ratio (or GHR), using Equation B–2 of this appendix and then calculate E_f, the arithmetic average of the E_h values.

(c) The results of the abbreviated flow-to-load test shall be considered acceptable, and no further action is required if the value of E_f does not exceed the applicable limit specified in section 2.2.5 of this appendix. All conditionally valid data recorded by the flow monitor shall be considered quality-assured, beginning with the hour of the probationary calibration error test that preceded the abbreviated flow-to-load test (if applicable). However, if E_f is outside the applicable limit, all conditionally valid data recorded by the flow monitor (if applicable) shall be considered invalid back to the hour of the probationary calibration error test that preceded the abbreviated flow-to-load test, and a single-load RATA is required in accordance with section 2.2.5.2 of this appendix. If the flow monitor must be re-linearized, however, a 3-load RATA is required.

2.3 Semiannual and Annual Assessments

For each primary and redundant backup monitoring system, perform relative accuracy assessments either semiannually or annually, as specified in section 2.3.1.1 or 2.3.1.2 of this appendix, for the type of test and the performance achieved. This requirement applies as of the calendar quarter following the calendar quarter in which the monitoring system is provisionally certified. A summary chart showing the frequency with which a

relative accuracy test audit must be performed, depending on the accuracy achieved, is located at the end of this appendix in Figure 2.

2.3.1 Relative Accuracy Test Audit (RATA)

2.3.1.1 Standard RATA Frequencies

(a) Except for Hg monitoring systems and as otherwise specified in §75.21(a)(6) or (a)(7) or in section 2.3.1.2 of this appendix, perform relative accuracy test audits semiannually, *i.e.*, once every two successive QA operating quarters (as defined in §72.2 of this chapter) for each primary and redundant backup SO_2 pollutant concentration monitor, flow monitor, CO_2 emissions concentration monitor (including O_2 monitors used to determine CO_2 emissions), CO_2 or O_2 diluent monitor used to determine heat input, moisture monitoring system, NO_X concentration monitoring system, NO_X-diluent CEMS, or SO_2-diluent CEMS. For each primary and redundant backup Hg concentration monitoring system and each sorbent trap monitoring system, RATAs shall be performed annually, *i.e.*, once every four successive QA operating quarters (as defined in §72.2 of this chapter). A calendar quarter that does not qualify as a QA operating quarter shall be excluded in determining the deadline for the next RATA. No more than eight successive calendar quarters shall elapse after the quarter in which a RATA was last performed without a subsequent RATA having been conducted. If a RATA has not been completed by the end of the eighth calendar quarter since the quarter of the last RATA, then the RATA must be completed within a 720 unit (or stack) operating hour grace period (as provided in section 2.3.3 of this appendix) following the end of the eighth successive elapsed calendar quarter, or data from the CEMS will become invalid.

(b) The relative accuracy test audit frequency of a CEMS may be reduced, as specified in section 2.3.1.2 of this appendix, for primary or redundant backup monitoring systems which qualify for less frequent testing. Perform all required RATAs in accordance with the applicable procedures and provisions in sections 6.5 through 6.5.2.2 of appendix A to this part and sections 2.3.1.3 and 2.3.1.4 of this appendix.

2.3.1.2 Reduced RATA Frequencies

Relative accuracy test audits of primary and redundant backup SO_2 pollutant concentration monitors, CO_2 pollutant concentration monitors (including O_2 monitors used to determine CO_2 emissions), CO_2 or O_2 diluent monitors used to determine heat input, moisture monitoring systems, NO_X concentration monitoring systems, flow monitors, NO_X-diluent monitoring systems or SO_2-diluent monitoring systems may be performed annually (i.e., once every four successive QA operating quarters, rather than once every two successive QA operating quarters) if any of the following conditions are met for the specific monitoring system involved:

(a) The relative accuracy during the audit of an SO_2 or CO_2 pollutant concentration monitor (including an O_2 pollutant monitor used to measure CO_2 using the procedures in appendix F to this part), or of a CO_2 or O_2 diluent monitor used to determine heat input, or of a NO_X concentration monitoring system, or of a NO_X-diluent monitoring system, or of an SO_2-diluent continuous emissions monitoring system is ≤ 7.5 percent;

(b) [Reserved]

(c) The relative accuracy during the audit of a flow monitor is ≤ 7.5 percent at each operating level tested;

(d) For low flow (≤ 10.0 fps, as measured by the reference method during the RATA) stacks/ducts, when the flow monitor fails to achieve a relative accuracy ≤ 7.5 percent during the audit, but the monitor mean value, calculated using Equation A–7 in appendix A to this part and converted back to an equivalent velocity in standard feet per second (fps), is within ±1.5 fps of the reference method mean value, converted to an equivalent velocity in fps;

(e) For low SO_2 or NO_X emitting units (average SO_2 or NO_X reference method concentrations ≤ 250 ppm) during the RATA, when an SO_2 pollutant concentration monitor or NO_X concentration monitoring system fails to achieve a relative accuracy ≤ 7.5 percent during the audit, but the monitor mean value from the RATA is within ±12 ppm of the reference method mean value;

(f) For units with low NO_X emission rates (average NO_X emission rate measured by the reference method during the RATA ≤ 0.200 lb/mmBtu), when a NO_X-diluent continuous emission monitoring system fails to achieve a relative accuracy ≤ 7.5 percent, but the monitoring system mean value from the RATA, calculated using Equation A–7 in appendix A to this part, is within ±0.015 lb/mmBtu of the reference method mean value;

(g) [Reserved]

(h) For a CO_2 or O_2 monitor, when the mean difference between the reference method values from the RATA and the corresponding monitor values is within ±0.7 percent CO_2 or O_2; and

(i) When the relative accuracy of a continuous moisture monitoring system is ≤ 7.5 percent or when the mean difference between the reference method values from the RATA and the corresponding monitoring system values is within ±1.0 percent H_2O.

2.3.1.3 RATA Load (or Operating) Levels and Additional RATA Requirements

(a) For SO_2 pollutant concentration monitors, CO_2 emissions concentration monitors

(including O_2 monitors used to determine CO_2 emissions), CO_2 or O_2 diluent monitors used to determine heat input, NO_X concentration monitoring systems, Hg concentration monitoring systems, sorbent trap monitoring systems, moisture monitoring systems, and NO_X-diluent monitoring systems, the required semiannual or annual RATA tests shall be done at the load level (or operating level) designated as normal under section 6.5.2.1(d) of appendix A to this part. If two load levels (or operating levels) are designated as normal, the required RATA(s) may be done at either load level (or operating level).

(b) For flow monitors installed on peaking units and bypass stacks, and for flow monitors that qualify to perform only single-level RATAs under section 6.5.2(e) of appendix A to this part, all required semiannual or annual relative accuracy test audits shall be single-load (or single-level) audits at the normal load (or operating level), as defined in section 6.5.2.1(d) of appendix A to this part.

(c) For all other flow monitors, the RATAs shall be performed as follows:

(1) An annual 2-load (or 2-level) flow RATA shall be done at the two most frequently used load levels (or operating levels), as determined under section 6.5.2.1(d) of appendix A to this part, or (if applicable) at the operating levels determined under section 6.5.2(e) of appendix A to this part. Alternatively, a 3-load (or 3-level) flow RATA at the low, mid, and high load levels (or operating levels), as defined under section 6.5.2.1(b) of appendix A to this part, may be performed in lieu of the 2-load (or 2-level) annual RATA.

(2) If the flow monitor is on a semiannual RATA frequency, 2-load (or 2-level) flow RATAs and single-load (or single-level) flow RATAs at the normal load level (or normal operating level) may be performed alternately.

(3) A single-load (or single-level) annual flow RATA may be performed in lieu of the 2-load (or 2-level) RATA if the results of an historical load data analysis show that in the time period extending from the ending date of the last annual flow RATA to a date that is no more than 21 days prior to the date of the current annual flow RATA, the unit (or combination of units, for a common stack) has operated at a single load level (or operating level) (low, mid, or high), for ≥ 85.0 percent of the time. Alternatively, a flow monitor may qualify for a single-load (or single-level) RATA if the 85.0 percent criterion is met in the time period extending from the beginning of the quarter in which the last annual flow RATA was performed through the end of the calendar quarter preceding the quarter of current annual flow RATA.

(4) A 3-load (or 3-level) RATA, at the low-, mid-, and high-load levels (or operating levels), as determined under section 6.5.2.1 of appendix A to this part, shall be performed at least once every twenty consecutive calendar quarters, except for flow monitors that are exempted from 3-load (or 3-level) RATA testing under section 6.5.2(b) or 6.5.2(e) of appendix A to this part.

(5) A 3-load (or 3-level) RATA is required whenever a flow monitor is re-linearized, *i.e.*, when its polynomial coefficients or K factor(s) are changed, except for flow monitors that are exempted from 3-load (or 3-level) RATA testing under section 6.5.2(b) or 6.5.2(e) of appendix A to this part. For monitors so exempted under section 6.5.2(b), a single-load flow RATA is required. For monitors so exempted under section 6.5.2(e), either a single-level RATA or a 2-level RATA is required, depending on the number of operating levels documented in the monitoring plan for the unit.

(6) For all multi-level flow audits, the audit points at adjacent load levels or at adjacent operating levels (*e.g.*, mid and high) shall be separated by no less than 25.0 percent of the ''range of operation,'' as defined in section 6.5.2.1 of appendix A to this part.

(d) A RATA of a moisture monitoring system shall be performed whenever the coefficient, K factor or mathematical algorithm determined under section 6.5.7 of appendix A to this part is changed.

2.3.1.4 Number of RATA Attempts

The owner or operator may perform as many RATA attempts as are necessary to achieve the desired relative accuracy test audit frequencies and/or bias adjustment factors. However, the data validation procedures in section 2.3.2 of this appendix must be followed.

2.3.2 Data Validation

(a) A RATA shall not commence if the monitoring system is operating out-of-control with respect to any of the daily and quarterly quality assurance assessments required by sections 2.1 and 2.2 of this appendix or with respect to the additional calibration error test requirements in section 2.1.3 of this appendix.

(b) Each required RATA shall be done according to paragraphs (b)(1), (b)(2) or (b)(3) of this section:

(1) The RATA may be done ''cold,'' i.e., with no corrective maintenance, repair, calibration adjustments, re-linearization or reprogramming of the monitoring system prior to the test.

(2) The RATA may be done after performing only the routine or non-routine calibration adjustments described in section 2.1.3 of this appendix at the zero and/or upscale calibration gas levels, but no other corrective maintenance, repair, re-

linearization or reprogramming of the monitoring system. Trial RATA runs may be performed after the calibration adjustments and additional adjustments within the allowable limits in section 2.1.3 of this appendix may be made prior to the RATA, as necessary, to optimize the performance of the CEMS. The trial RATA runs need not be reported, provided that they meet the specification for trial RATA runs in §75.20(b)(3)(vii)(E)(*2*). However, if, for any trial run, the specification in §75.20(b)(3)(vii)(E)(*2*) is not met, the trial run shall be counted as an aborted RATA attempt.

(3) The RATA may be done after repair, corrective maintenance, re-linearization or reprogramming of the monitoring system. In this case, the monitoring system shall be considered out-of-control from the hour in which the repair, corrective maintenance, re-linearization or reprogramming is commenced until the RATA has been passed. Alternatively, the data validation procedures and associated timelines in §§75.20(b)(3)(ii) through (ix) may be followed upon completion of the necessary repair, corrective maintenance, re-linearization or reprogramming. If the procedures in §75.20(b)(3) are used, the words ''quality assurance'' apply instead of the word ''recertification.''

(c) Once a RATA is commenced, the test must be done hands-off. No adjustment of the monitor's calibration is permitted during the RATA test period, other than the routine calibration adjustments following daily calibration error tests, as described in section 2.1.3 of this appendix. If a routine daily calibration error test is performed and passed just prior to a RATA (or during a RATA test period) and a mathematical correction factor is automatically applied by the DAHS, the correction factor shall be applied to all subsequent data recorded by the monitor, including the RATA test data. For 2-level and 3-level flow monitor audits, no linearization or reprogramming of the monitor is permitted in between load levels.

(d) For single-load (or single-level) RATAs, if a daily calibration error test is failed during a RATA test period, prior to completing the test, the RATA must be repeated. Data from the monitor are invalidated prospectively from the hour of the failed calibration error test until the hour of completion of a subsequent successful calibration error test. The subsequent RATA shall not be commenced until the monitor has successfully passed a calibration error test in accordance with section 2.1.3 of this appendix. Notwithstanding these requirements, when ASTM D6784–02 (incorporated by reference under §75.6 of this part) or Method 29 in appendix A–8 to part 60 of this chapter is used as the reference method for the RATA of a Hg CEMS, if a calibration error test of the CEMS is failed during a RATA test period, any test run(s) completed prior to the failed calibration error test need not be repeated; however, the RATA may not continue until a subsequent calibration error test of the Hg CEMS has been passed. For multiple-load (or multiple-level) flow RATAs, each load level (or operating level) is treated as a separate RATA (*i.e.*, when a calibration error test is failed prior to completing the RATA at a particular load level (or operating level), only the RATA at that load level (or operating level) must be repeated; the results of any previously-passed RATA(s) at the other load level(s) (or operating level(s)) are unaffected, unless re-linearization of the monitor is required to correct the problem that caused the calibration failure, in which case a subsequent 3-load (or 3-level) RATA is required), except as otherwise provided in section 2.3.1.3(c)(5) of this appendix.

(e) For a RATA performed using the option in paragraph (b)(1) or (b)(2) of this section, if the RATA is failed (that is, if the relative accuracy exceeds the applicable specification in section 3.3 of appendix A to this part) or if the RATA is aborted prior to completion due to a problem with the CEMS, then the CEMS is out-of-control and all emission data from the CEMS are invalidated prospectively from the hour in which the RATA is failed or aborted. Data from the CEMS remain invalid until the hour of completion of a subsequent RATA that meets the applicable specification in section 3.3 of appendix A to this part. If the option in paragraph (b)(3) of this section to use the data validation procedures and associated timelines in §§75.20(b)(3)(ii) through(b)(3)(ix) has been selected, the beginning and end of the out-of-control period shall be determined in accordance with §75.20(b)(3)(vii)(A) and (B). Note that when a RATA is aborted for a reason other than monitoring system malfunction (*see* paragraph (h) of this section), this does not trigger an out-of-control period for the monitoring system.

(f) For a 2-level or 3-level flow RATA, if, at any load level (or operating level), a RATA is failed or aborted due to a problem with the flow monitor, the RATA at that load level (or operating level) must be repeated. The flow monitor is considered out-of-control and data from the monitor are invalidated from the hour in which the test is failed or aborted and remain invalid until the passing of a RATA at the failed load level (or operating level), unless the option in paragraph (b)(3) of this section to use the data validation procedures and associated timelines in §75.20(b)(3)(ii) through (b)(3)(ix) has been selected, in which case the beginning and end of the out-of-control period shall be determined in accordance with §75.20(b)(3)(vii)(A) and (B). Flow RATA(s) that were previously passed at the other load level(s) (or operating level(s)) do not have to be repeated unless the flow monitor must be re-linearized following the failed or aborted test. If the

flow monitor is re-linearized, a subsequent 3-load (or 3-level) RATA is required, except as otherwise provided in section 2.3.1.3(c)(5) of this appendix.

(g) Data validation for failed RATAs for a CO_2 pollutant concentration monitor (or an O_2 monitor used to measure CO_2 emissions), a NO_X pollutant concentration monitor, and a NO_X-diluent monitoring system shall be done according to paragraphs (g)(1) and (g)(2) of this section:

(1) For a CO_2 pollutant concentration monitor (or an O_2 monitor used to measure CO_2 emissions) which also serves as the diluent component in a NO_X-diluent monitoring system, if the CO_2 (or O_2) RATA is failed, then both the CO_2 (or O_2) monitor and the associated NO_X-diluent system are considered out-of-control, beginning with the hour of completion of the failed CO_2 (or O_2) monitor RATA, and continuing until the hour of completion of subsequent hands-off RATAs which demonstrate that both systems have met the applicable relative accuracy specifications in sections 3.3.2 and 3.3.3 of appendix A to this part, unless the option in paragraph (b)(3) of this section to use the data validation procedures and associated timelines in §75.20(b)(3)(ii) through (b)(3)(ix) has been selected, in which case the beginning and end of the out-of-control period shall be determined in accordance with §75.20(b)(3)(vii)(A) and (B).

(2) This paragraph (g)(2) applies only to a NO_X pollutant concentration monitor that serves both as the NO_X component of a NO_X concentration monitoring system (to measure NO_X mass emissions) and as the NO_X component in a NO_X-diluent monitoring system (to measure NO_X emission rate in lb/mmBtu). If the RATA of the NO_X concentration monitoring system is failed, then both the NO_X concentration monitoring system and the associated NO_X-diluent monitoring system are considered out-of-control, beginning with the hour of completion of the failed NO_X concentration RATA, and continuing until the hour of completion of subsequent hands-off RATAs which demonstrate that both systems have met the applicable relative accuracy specifications in sections 3.3.2 and 3.3.7 of appendix A to this part, unless the option in paragraph (b)(3) of this section to use the data validation procedures and associated timelines in §75.20(b)(3)(ii) through (b)(3)(ix) has been selected, in which case the beginning and end of the out-of-control period shall be determined in accordance with §75.20(b)(3)(vii)(A) and (B).

(h) For each monitoring system, report the results of all completed and partial RATAs that affect data validation (i.e., all completed, passed RATAs; all completed, failed RATAs; and all RATAs aborted due to a problem with the CEMS, including trial RATA runs counted as failed test attempts under paragraph (b)(2) of this section or under §75.20(b)(3)(vii)(F)) in the quarterly report required under §75.64. Note that RATA attempts that are aborted or invalidated due to problems with the reference method or due to operational problems with the affected unit(s) need not be reported. Such runs do not affect the validation status of emission data recorded by the CEMS. However, a record of all RATAs, trial RATA runs and RATA attempts (whether reported or not) must be kept on-site as part of the official test log for each monitoring system.

(i) Each time that a hands-off RATA of an SO_2 pollutant concentration monitor, a NO_X-diluent monitoring system, a NO_X concentration monitoring system, a Hg concentration monitoring system, a sorbent trap monitoring system, or a flow monitor is passed, perform a bias test in accordance with section 7.6.4 of appendix A to this part. Apply the appropriate bias adjustment factor to the reported SO_2, Hg, NO_X, or flow rate data, in accordance with section 7.6.5 of appendix A to this part.

(j) Failure of the bias test does not result in the monitoring system being out-of-control.

2.3.3 RATA Grace Period

(a) The owner or operator has a grace period of 720 consecutive unit operating hours, as defined in §72.2 of this chapter (or, for CEMS installed on common stacks or bypass stacks, 720 consecutive stack operating hours, as defined in §72.2 of this chapter), in which to complete the required RATA for a particular CEMS whenever:

(1) A required RATA has not been performed by the end of the QA operating quarter in which it is due; or

(2) A required 3-load flow RATA has not been performed by the end of the calendar quarter in which it is due; or

(3) For a unit which is conditionally exempted under §75.21(a)(7) from the SO_2 RATA requirements of this part, an SO_2 RATA has not been completed by the end of the calendar quarter in which the annual usage of fuel(s) with a sulfur content higher than very low sulfur fuel (as defined in §72.2 of this chapter) exceeds 480 hours; or

(4) Eight successive calendar quarters have elapsed, following the quarter in which a RATA was last performed, without a subsequent RATA having been done, due either to infrequent operation of the unit(s) or frequent combustion of very low sulfur fuel, as defined in §72.2 of this chapter (SO_2 monitors, only), or a combination of these factors.

(b) Except for SO_2 monitoring system RATAs, the grace period shall begin with the first unit (or stack) operating hour following the calendar quarter in which the required RATA was due. For SO_2 monitor RATAs, the grace period shall begin with the first unit (or stack) operating hour in which fuel with

a total sulfur content higher than that of very low sulfur fuel (as defined in §72.2 of this chapter) is burned in the unit(s), following the quarter in which the required RATA is due. Data validation during a RATA grace period shall be done in accordance with the applicable provisions in section 2.3.2 of this appendix.

(c) If, at the end of the 720 unit (or stack) operating hour grace period, the RATA has not been completed, data from the monitoring system shall be invalid, beginning with the first unit operating hour following the expiration of the grace period. Data from the CEMS remain invalid until the hour of completion of a subsequent hands-off RATA. The deadline for the next test shall be either two QA operating quarters (if a semiannual RATA frequency is obtained) or four QA operating quarters (if an annual RATA frequency is obtained) after the quarter in which the RATA is completed, not to exceed eight calendar quarters.

(d) When a RATA is done during a grace period in order to satisfy a RATA requirement from a previous quarter, the deadline for the next RATA shall determined as follows:

(1) If the grace period RATA qualifies for a reduced, (i.e., annual), RATA frequency the deadline for the next RATA shall be set at three QA operating quarters after the quarter in which the grace period test is completed.

(2) If the grace period RATA qualifies for the standard, (i.e., semiannual), RATA frequency the deadline for the next RATA shall be set at two QA operating quarters after the quarter in which the grace period test is completed.

(3) Notwithstanding these requirements, no more than eight successive calendar quarters shall elapse after the quarter in which the grace period test is completed, without a subsequent RATA having been conducted.

2.3.4 Bias Adjustment Factor

Except as otherwise specified in section 7.6.5 of appendix A to this part, if an SO_2 pollutant concentration monitor, flow monitor, NO_X CEMS, NO_X concentration monitoring system used to calculate NO_X mass emissions, Hg concentration monitoring system, or sorbent trap monitoring system fails the bias test specified in section 7.6 of appendix A to this part, use the bias adjustment factor given in Equations A–11 and A–12 of appendix A to this part, or the allowable alternative BAF specified in section 7.6.5(b) of appendix A to this part, to adjust the monitored data.

2.4 Recertification, Quality Assurance, RATA Frequency and Bias Adjustment Factors (Special Considerations)

(a) When a significant change is made to a monitoring system such that recertification of the monitoring system is required in accordance with §75.20(b), a recertification test (or tests) must be performed to ensure that the CEMS continues to generate valid data. In all recertifications, a RATA will be one of the required tests; for some recertifications, other tests will also be required. A recertification test may be used to satisfy the quality assurance test requirement of this appendix. For example, if, for a particular change made to a CEMS, one of the required recertification tests is a linearity check and the linearity check is successful, then, unless another such recertification event occurs in that same QA operating quarter, it would not be necessary to perform an additional linearity test of the CEMS in that quarter to meet the quality assurance requirement of section 2.2.1 of this appendix. For this reason, EPA recommends that owners or operators coordinate component replacements, system upgrades, and other events that may require recertification, to the extent practicable, with the periodic quality assurance testing required by this appendix. When a quality assurance test is done for the dual purpose of recertification and routine quality assurance, the applicable data validation procedures in §75.20(b)(3) shall be followed.

(b) Except as provided in section 2.3.3 of this appendix, whenever a passing RATA of a gas monitor is performed, or a passing 2-load (or 2-level) RATA or a passing 3-load (or 3-level) RATA of a flow monitor is performed (irrespective of whether the RATA is done to satisfy a recertification requirement or to meet the quality assurance requirements of this appendix, or both), the RATA frequency (semi-annual or annual) shall be established based upon the date and time of completion of the RATA and the relative accuracy percentage obtained. For 2-load (or 2-level) and 3-load (or 3-level) flow RATAs, use the highest percentage relative accuracy at any of the loads (or levels) to determine the RATA frequency. The results of a single-load (or single-level) flow RATA may be used to establish the RATA frequency when the single-load (or single-level) flow RATA is specifically required under section 2.3.1.3(b) of this appendix or when the single-load (or single-level) RATA is allowed under section 2.3.1.3(c) of this appendix for a unit that has operated at one load level (or operating level) for ≥ 85.0 percent of the time since the last annual flow RATA. No other single-load (or single-level) flow RATA may be used to establish an annual RATA frequency; however, a 2-load or 3-load (or a 2-level or 3-level) flow RATA may be performed at any time or in place of any required single-load

(or single-level) RATA, in order to establish an annual RATA frequency.

2.5 Other Audits

Affected units may be subject to relative accuracy test audits at any time. If a monitor or continuous emission monitoring system fails the relative accuracy test during the audit, the monitor or continuous emission monitoring system shall be considered to be out-of-control beginning with the date and time of completion of the audit, and continuing until a successful audit test is completed following corrective action. If a monitor or monitoring system fails the bias test during an audit, use the bias adjustment factor given by equations A–11 and A–12 in appendix A to this part to adjust the monitored data. Apply this adjustment factor from the date and time of completion of the audit until the date and time of completion of a relative accuracy test audit that does not show bias.

2.6 System Integrity Checks for Hg Monitors

For each Hg concentration monitoring system (except for a Hg monitor that does not have a converter), perform a single-point system integrity check weekly, i.e., at least once every 168 unit or stack operating hours, using a NIST-traceable source of oxidized Hg. Perform this check using a mid- or high-level gas concentration, as defined in section 5.2 of appendix A to this part. The performance specifications in paragraph (3) of section 3.2 of appendix A to this part must be met, otherwise the monitoring system is considered out-of-control, from the hour of the failed check until a subsequent system integrity check is passed. If a required system integrity check is not performed and passed within 168 unit or stack operating hours of last successful check, the monitoring system shall also be considered out of control, beginning with the 169th unit or stack operating hour after the last successful check, and continuing until a subsequent system integrity check is passed. This weekly check is not required if the daily calibration assessments in section 2.1.1 of this appendix are performed using a NIST-traceable source of oxidized Hg.

FIGURE 1 TO APPENDIX B OF PART 75—QUALITY ASSURANCE TEST REQUIREMENTS

Test	Basic QA test frequency requirements*				
	Daily*	Weekly	Quarterly*	Semiannual*	Annual
Calibration Error Test (2 pt.)	✔				
Interference Check (flow)	✔				
Flow-to-Load Ratio			✔		
Leak Check (DP flow monitors)			✔		
Linearity Check or System Integrity Check** (3 pt.)			✔		
Single-point System Integrity Check**		✔			
RATA (SO_2, NO_X, CO_2, O_2, H_2O)[1]				✔	
RATA (All Hg monitoring systems)					✔
RATA (flow)[1 2]				✔	

*"Daily" means operating days, only. "Weekly" means once every 168 unit or stack operating hours. "Quarterly" means once every QA operating quarter. "Semiannual" means once every two QA operating quarters. "Annual" means once every four QA operating quarters.

**The system integrity check applies only to Hg monitors with converters. The single-point weekly system integrity check is not required if daily calibrations are performed using a NIST-traceable source of oxidized Hg. The 3-point quarterly system integrity check is not required if a linearity check is performed.

[1] Conduct RATA annually (i.e., once every four QA operating quarters), if monitor meets accuracy requirements to qualify for less frequent testing.

[2] For flow monitors installed on peaking units, bypass stacks, or units that qualify for single-level RATA testing under section 6.5.2(e) of this part, conduct all RATAs at a single, normal load (or operating level). For other flow monitors, conduct annual RATAs at two load levels (or operating levels). Alternating single-load and 2-load (or single-level and 2-level) RATAs may be done if a monitor is on a semiannual frequency. A single-load (or single-level) RATA may be done in lieu of a 2-load (or 2-level) RATA if, since the last annual flow RATA, the unit has operated at one load level (or operating level) for ≥85.0 percent of the time. A 3-level RATA is required at least once every five calendar years and whenever a flow monitor is re-linearized, except for flow monitors exempted from 3-level RATA testing under section 6.5.2(b) or 6.5.2(e) of appendix A to this part.

FIGURE 2 TO APPENDIX B OF PART 75—RELATIVE ACCURACY TEST FREQUENCY INCENTIVE SYSTEM

RATA	Semiannual [W] (percent)	Annual [W]
SO_2 or NO_X [Y]	7.5% <RA ≤10.0% or ±15.0 ppm [X]	RA ≤ 7.5% or ±12.0 ppm [X].
SO_2-diluent	7.5% <RA ≤10.0% or ±0.030 lb/mmBtu [X]	RA ≤7.5% or ±0.025 lb/mmBtu =G5X.
NO_X-diluent	7.5% <RA ≤10.0% or ±0.020 lb/mmBtu [X]	RA ≤ 7.5% or ±0. 015 lb/mmBtu [X].
Flow	7.5% < RA ≤ 10.0% or ±2.0 fps [X]	RA ≤ 7.5% or ±1.5 fps [X].
CO_2 or O_2	7.5% < RA ≤ 10.0% or ±1.0% CO_2/O_2 [X]	RA ≤ 7.5% or ±0.7% CO_2/O_2 [X].
Hg [X]	N/A	RA < 20.0% or ± 1.0 μg/scm [X].
Moisture	7.5% <RA ≤10.0% or ±1.5% H_2O [X]	RA ≤7.5% or ±1.0% H_2O [X].

[W] The deadline for the next RATA is the end of the second (if semiannual) or fourth (if annual) successive QA operating quarter following the quarter in which the CEMS was last tested. Exclude calendar quarters with fewer than 168 unit operating hours (or, for common stacks and bypass stacks, exclude quarters with fewer than 168 stack operating hours) in determining the RATA deadline. For SO_2 monitors, QA operating quarters in which only very low sulfur fuel as defined in § 72.2, is combusted may also be excluded. However, the exclusion of calendar quarters is limited as follows: the deadline for the next RATA shall be no more than 8 calendar quarters after the quarter in which a RATA was last performed.

[X] The difference between monitor and reference method mean values applies to moisture monitors, CO_2, and O_2 monitors, low emitters of SO_2, NO_X, or Hg, or and low flow, only. The specifications for Hg monitors also apply to sorbent trap monitoring systems.

[Y] A NO_X concentration monitoring system used to determine NO_X mass emissions under § 75.71.

[58 FR 3701, Jan. 11, 1993, as amended at 60 FR 26546, 26571, May 17, 1995; 61 FR 59165, Nov. 20, 1996; 64 FR 28644, May 26, 1999; 64 FR 37582, July 12, 1999; 67 FR 40456, 40457, June 12, 2002; 67 FR 53505, Aug. 16, 2002; 67 FR 57274, Sept. 9, 2002; 70 FR 28693, May 18, 2005; 72 FR 51528, Sept. 7, 2007; 73 FR 4367, Jan. 24, 2008]

APPENDIX C TO PART 75—MISSING DATA ESTIMATION PROCEDURES

1. PARAMETRIC MONITORING PROCEDURE FOR MISSING SO_2 CONCENTRATION OR NO_X EMISSION RATE DATA

1.1 Applicability

The owner or operator of any affected unit equipped with post-combustion SO_2 or NO_X emission controls and SO_2 pollutant concentration monitors and/or NO_X continuous emission monitoring systems at the inlet and outlet of the emission control system may apply to the Administrator for approval and certification of a parametric, empirical, or process simulation method or model for calculating substitute data for missing data periods. Such methods may be used to parametrically estimate the removal efficiency of the SO_2 of postcombustion NO_X emission controls which, with the monitored inlet concentration or emission rate data, may be used to estimate the average concentration of SO_2 emissions or average emission rate of NO_X discharged to the atmosphere. After approval by the Administrator, such method or model may be used for filling in missing SO_2 concentration or NO_X emission rate data when data from the outlet SO_2 pollutant concentration monitor or outlet NO_X continuous emission monitoring system have been reported with an annual monitor data availability of 90.0 percent or more.

Base the empirical and process simulation methods or models on the fundamental chemistry and engineering principles involved in the treatment of pollutant gas. On a case-by-case basis, the Administrator may pre-certify commercially available process simulation methods and models.

1.2 Petition Requirements

Continuously monitor, determine, and record hourly averages of the estimated SO_2 or NO_X removal efficiency and of the parameters specified below, at a minimum. The affected facility shall supply additional parametric information where appropriate. Measure the SO_2 concentration or NO_X emission rate, removal efficiency of the add-on emission controls, and the parameters for at least 2160 unit operating hours. Provide information for all expected operating conditions and removal efficiencies. At least 4 evenly spaced data points are required for a valid hourly average, except during periods of calibration, maintenance, or quality assurance activities, during which 2 data points per hour are sufficient. The Administrator will review all applications on a case-by-case basis.

1.2.1 Parameters for Wet Flue Gas Desulfurization System

1.2.1.1 Number of scrubber modules in operation.

1.2.1.2 Total slurry rate to each scrubber module (gal per min).

1.2.1.3 In-line absorber pH of each scrubber module.

1.2.1.4 Pressure differential across each scrubber module (inches of water column).

1.2.1.5 Unit load (MWe).

1.2.1.6 Inlet and outlet SO_2 concentration as determined by the monitor or missing data substitution procedures.

1.2.1.7 Percent solids in slurry for each scrubber module.

1.2.1.8 Any other parameters necessary to verify scrubber removal efficiency, if the Administrator determines the parameters above are not sufficient.

1.2.2 Parameters for Dry Flue Gas Desulfurization System

1.2.2.1 Number of scrubber modules in operation.

1.2.2.2 Atomizer slurry flow rate to each scrubber module (gal per min).

1.2.2.3 Inlet and outlet temperature for each scrubber module (°F).

1.2.2.4 Pressure differential across each scrubber module (inches of water column).

1.2.2.5 Unit load (MWe).

1.2.2.6 Inlet and outlet SO_2 concentration as determined by the monitor or missing data substitution procedures.

1.2.2.7 Any other parameters necessary to verify scrubber removal efficiency, if the Administrator determines the parameters above are not sufficient.

1.2.3 Parameters for Other Flue Gas Desulfurization Systems

If SO_2 control technologies other than wet or dry lime or limestone scrubbing are selected for flue gas desulfurization, a corresponding empirical correlation or process simulation parametric method using appropriate parameters may be developed by the owner or operator of the affected unit, and then reviewed and approved or modified by the Administrator on a case-by-case basis.

1.2.4 Parameters for Post-Combustion NO_X Emission Controls

1.2.4.1 Inlet air flow rate to the unit (boiler) (mcf/hr).

1.2.4.2 Excess oxygen concentration of flue gas at stack outlet (percent).

1.2.4.3 Carbon monoxide concentration of flue gas at stack outlet (ppm).

1.2.4.4 Temperature of flue gas at outlet of the unit (°F).

1.2.4.5 Inlet and outlet NO_X emission rate as determined by the NO_X continuous emission monitoring system or missing data substitution procedures.

1.2.4.6 Any other parameters specific to the emission reduction process necessary to verify the NO_X control removal efficiency, (e.g., reagent feedrate in gal/mi).

1.3 Correlation of Emissions With Parameters

Establish a method for correlating hourly averages of the parameters identified above with the percent removal efficiency of the SO_2 or post-combustion NO_X emission controls under varying unit operating loads. Equations 1–7 in §75.15 may be used to estimate the percent removal efficiency of the SO_2 emission controls on an hourly basis.

Each parametric data substitution procedure should develop a data correlation procedure to verify the performance of the SO_2 emission controls or post-combustion NO_X emission controls, along with the SO_2 pollutant concentration monitor and NO_X continuous emission monitoring system values for varying unit load ranges.

For NO_X emission rate data, and wherever the performance of the emission controls varies with the load, use the load range procedure provided in section 2.2 of this appendix.

1.4 Calculations

1.4.1 Use the following equation to calculate substitute data for filling in missing (outlet) SO_2 pollutant concentration monitor data.

$$M_o = I_c (1–E)$$

(Eq. C–1)

where,

M_o = Substitute data for outlet SO_2 concentration, ppm.

I_c = Recorded inlet SO_2 concentration, ppm.

E = Removal efficiency of SO_2 emission controls as determined by the correlation procedure described in section 1.3 of this appendix.

1.4.2 Use the following equation to calculate substitute data for filling in missing (outlet) NO_X emission rate data.

$$M_o = I_c (1–E)$$

(Eq. C–2)

where,

M_o = Substitute data for outlet NO_X emission rate, lb/mmBtu.

I_c = Recorded inlet NO_X emission rate, lb/mmBtu.

E = Removal efficiency of post-combustion NO_X emission controls determined by the correlation procedure described in section 1.3 of this appendix.

1.5 Missing Data

1.5.1 If both the inlet and the outlet SO_2 pollutant concentration monitors are unavailable simultaneously, use the maximum inlet SO_2 concentration recorded by the inlet SO_2 pollutant concentration monitor during the previous 720 quality-assured monitor operating hours to substitute for the inlet SO_2 concentration in equation C–1 of this appendix.

1.5.2 If both the inlet and outlet NO_X continuous emission monitoring systems are unavailable simultaneously, use the maximum inlet NO_X emission rate for the corresponding unit load recorded by the NO_X continuous emission monitoring system at the inlet during the previous 2160 quality-assured monitor operating hours to substitute for the inlet NO_X emission rate in equation C–2 of this appendix.

1.6 Application

Apply to the Administrator for approval and certification of the parametric substitution procedure for filling in missing SO_2 concentration or NO_X emission rate data using the established criteria and information identified above. DO not use this procedure until approved by the Administrator.

2. LOAD-BASED PROCEDURE FOR MISSING FLOW RATE, NO_X CONCENTRATION, AND NO_X EMISSION RATE DATA

2.1 Applicability

This procedure is applicable for data from all affected units for use in accordance with the provisions of this part to provide substitute data for volumetric flow rate (scfh), NO_X emission rate (in lb/mmBtu) from NO_X-diluent continuous emission monitoring systems, and NO_X concentration data (in ppm) from NOx concentration monitoring systems used to determine NO_X mass emissions.

2.2 Procedure

2.2.1 For a single unit, establish ten operating load ranges defined in terms of percent of the maximum hourly average gross load of the unit, in gross megawatts (MWge), as shown in Table C–1. (Do not use integrated hourly gross load in MW-hr.) For units sharing a common stack monitored with a single flow monitor, the load ranges for flow (but not for NO_X) may be broken down into 20 operating load ranges in increments of 5.0 percent of the combined maximum hourly average gross load of all units utilizing the common stack. If this option is selected, the twentieth (uppermost) operating load range shall include all values greater than 95.0 percent of the maximum hourly average gross load. For a cogenerating unit or other unit at which some portion of the heat input is not used to produce electricity or for a unit for which hourly average gross load in MWge is not recorded separately, use the hourly gross steam load of the unit, in pounds of steam per hour at the measured temperature (°F) and pressure (psia) instead of MWge. Indicate a change in the number of load ranges or the units of loads to be used in the precertification section of the monitoring plan.

TABLE C–1—DEFINITION OF OPERATING LOAD RANGES FOR LOAD-BASED SUBSTITUTION DATA PROCEDURES

Operating load range	Percent of maximum hourly gross load or maximum hourly gross steam load (percent)
1	0–10
2	>10–20
3	>20–30
4	>30–40
5	>40–50
6	>50–60
7	>60–70
8	>70–80
9	>80–90
10	>90

2.2.2 Beginning with the first hour of unit operation after installation and certification of the flow monitor or the NO_X-diluent continuous emission monitoring system (or a NO_X concentration monitoring system used to determine NO_X mass emissions, as defined in §75.71(a)(2)), for each hour of unit operation record a number, 1 through 10, (or 1 through 20 for flow at common stacks) that identifies the operating load range corresponding to the integrated hourly gross load of the unit(s) recorded for each unit operating hour.

2.2.3 Beginning with the first hour of unit operation after installation and certification of the flow monitor or the NO_X-diluent continuous emission monitoring system (or a NO_X concentration monitoring system used to determine NO_X mass emissions, as defined in §75.71(a)(2)) and continuing thereafter, the data acquisition and handling system must be capable of calculating and recording the following information for each unit operating hour of missing flow or NO_X data within each identified load range during the shorter of: (a) the previous 2,160 quality-assured monitor operating hours (on a rolling basis), or (b) all previous quality-assured monitor operating hours.

2.2.3.1 Average of the hourly flow rates reported by a flow monitor, in scfh.

2.2.3.2 The 90th percentile value of hourly flow rates, in scfh.

2.2.3.3 The 95th percentile value of hourly flow rates, in scfh.

2.2.3.4 The maximum value of hourly flow rates, in scfh.

2.2.3.5 Average of the hourly NO_X emission rate, in lb/mmBtu, reported by a NO_X continuous emission monitoring system.

2.2.3.6 The 90th percentile value of hourly NO_X emission rates, in lb/mmBtu.

2.2.3.7 The 95th percentile value of hourly NO_X emission rates, in lb/mmBtu.

2.2.3.8 The maximum value of hourly NO_X emission rates, in lb/mmBtu.

2.2.3.9 Average of the hourly NO_X pollutant concentrations, in ppm, reported by a NO_X concentration monitoring system used to determine NO_X mass emissions, as defined in §75.71(a)(2).

2.2.3.10 The 90th percentile value of hourly NO_X pollutant concentration, in ppm.

2.2.3.11 The 95th percentile value of hourly NO_X pollutant concentration, in ppm.

2.2.3.12 The maximum value of hourly NO_X pollutant concentration, in ppm.

2.2.4 Calculate all monitor or continuous emission monitoring system data averages, maximum values, and percentile values determined by this procedure using bias adjusted values in the load ranges.

2.2.5 When a bias adjustment is necessary for the flow monitor and/or the NO_X-diluent continuous emission monitoring system (and/or the NO_X concentration monitoring system used to determine NO_X mass emissions, as defined in §75.71(a)(2)), apply the adjustment factor to all monitor or continuous emission monitoring system data values placed in the load ranges.

2.2.6 Use the calculated monitor or monitoring system data averages, maximum values, and percentile values to substitute for missing flow rate and NO_X emission rate data (and where applicable, NO_X concentration data) according to the procedures in subpart D of this part.

3. NON-LOAD-BASED PROCEDURE FOR MISSING FLOW RATE, NO_X *Concentration, and* NO_X EMISSION RATE DATA (OPTIONAL)

3.1 Applicability

For affected units that do not produce electrical output in megawatts or thermal output in klb/hr of steam, this procedure may be used in accordance with the provisions of this part to provide substitute data for volumetric flow rate (scfh), NO_X emission rate (in lb/mmBtu) from NO_X-diluent continuous emission monitoring systems, and NO_X concentration data (in ppm) from NO_X concentration monitoring systems used to determine NO_X mass emissions.

3.2 Procedure

3.2.1 For each monitored parameter (flow rate, NO_X emission rate, or NO_X concentration), establish at least two, but no more than ten operational bins, corresponding to various operating conditions and parameters (or combinations of these) that affect volumetric flow rate or NO_X emissions. Include a complete description of each operational bin in the hardcopy portion of the monitoring plan required under §75.53(e)(2), identifying the unique combination of parameters and operating conditions associated with the bin and explaining the relationship between these parameters and conditions and the magnitude of the stack gas flow rate or NO_X emissions. Assign a unique number, 1 through 10, to each operational bin. Examples of conditions and parameters that may be used to define operational bins include unit heat input, type of fuel combusted, specific stages of an industrial process, or (for common stacks), the particular combination of units that are in operation.

3.2.2 In the electronic quarterly report required under §75.64, indicate for each hour of unit operation the operational bin associated with the NO_X or flow rate data, by recording the number assigned to the bin under section 3.2.1 of this appendix.

3.2.3 The data acquisition and handling system must be capable of properly identifying and recording the operational bin number for each unit operating hour. The DAHS must also be capable of calculating and recording the following information (as applicable) for each unit operating hour of missing flow or NO_X data within each identified operational bin during the shorter of:

(a) The previous 2,160 quality-assured monitor operating hours (on a rolling basis), or

(b) All previous quality-assured monitor operating hours in the previous 3 years:

3.2.3.1 Average of the hourly flow rates reported by a flow monitor (scfh).

3.2.3.2 The 90th percentile value of hourly flow rates (scfh).

3.2.3.3 The 95th percentile value of hourly flow rates (scfh).

3.2.3.4 The maximum value of hourly flow rates (scfh).

3.2.3.5 Average of the hourly NO_X emission rates, in lb/mmBtu, reported by a NO_X-diluent continuous emission monitoring system.

3.2.3.6 The 90th percentile value of hourly NO_X emission rates (lb/mmBtu).

3.2.3.7 The 95th percentile value of hourly NO_X emission rates (lb/mmBtu).

3.2.3.8 The maximum value of hourly NO_X emission rates, in (lb/mmBtu).

3.2.3.9 Average of the hourly NO_X pollutant concentrations (ppm), reported by a NO_X concentration monitoring system used to determine NO_X mass emissions, as defined in §75.71(a)(2).

3.2.3.10 The 90th percentile value of hourly NO_X pollutant concentration (ppm).

3.2.3.11 The 95th percentile value of hourly NO_X pollutant concentration (ppm).

3.2.3.12 The maximum value of hourly NO_X pollutant concentration (ppm).

3.2.4 When a bias adjustment is necessary for the flow monitor and/or the NO_X-diluent continuous emission monitoring system (and/or the NO_X concentration monitoring system), apply the bias adjustment factor to all data values placed in the operational bins.

3.2.5 Calculate all CEMS data averages, maximum values, and percentile values determined by this procedure using bias-adjusted values.

3.2.6 Use the calculated monitor or monitoring system data averages, maximum values, and percentile values to substitute for missing flow rate and NO_X emission rate data (and where applicable, NO_X concentration data) according to the procedures in subpart D of this part.

[58 FR 3701, Jan. 11, 1993, as amended at 60 FR 26547, 26548, May 17, 1995; 63 FR 57313, Oct. 27, 1998; 64 FR 28652, May 26, 1999; 67 FR 40459, June 12, 2002]

APPENDIX D TO PART 75—OPTIONAL SO_2 EMISSIONS DATA PROTOCOL FOR GAS-FIRED AND OIL-FIRED UNITS

1. APPLICABILITY

1.1 This protocol may be used in lieu of continuous SO_2 pollutant concentration and flow monitors for the purpose of determining hourly SO_2 mass emissions and heat input from: gas-fired units, as defined in §72.2 of this chapter, or oil-fired units, as defined in §72.2 of this chapter. Section 2.1 of this appendix provides procedures for measuring oil or gaseous fuel flow using a fuel flowmeter, section 2.2 of this appendix provides procedures for conducting oil sampling and analysis to determine sulfur content and gross calorific value (GCV) of fuel oil, and section 2.3 of this appendix provides procedures for determining the sulfur content and GCV of gaseous fuels.

1.2 Pursuant to the procedures in §75.20, complete all testing requirements to certify use of this protocol in lieu of a flow monitor and an SO_2 continuous emission monitoring system. Complete all testing requirements no later than the applicable deadline specified in §75.4. Apply to the Administrator for initial certification to use this protocol no later than 45 days after the completion of all certification tests.

2. PROCEDURE

2.1 Fuel Flowmeter Measurements

For each hour when the unit is combusting fuel, measure and record the flow rate of fuel combusted by the unit, except as provided in section 2.1.4 of this appendix. Measure the flow rate of fuel with an in-line fuel flowmeter, and automatically record the data with a data acquisition and handling system, except as provided in section 2.1.4 of this appendix.

2.1.1 Measure the flow rate of each fuel entering and being combusted by the unit. If, on an annual basis, more than 5.0 percent of the fuel from the main pipe is diverted from the unit without being burned and that diversion occurs downstream of the fuel flowmeter, an additional in-line fuel flowmeter is required to account for the unburned fuel. In this case, record the flow rate of each fuel combusted by the unit as the difference between the flow measured in the pipe leading to the unit and the flow in the pipe diverting fuel away from the unit. However, the additional fuel flowmeter is not required if, on an annual basis, the total amount of fuel diverted away from the unit, expressed as a percentage of the total annual fuel usage by the unit is demonstrated to be less than or equal to 5.0 percent. The owner or operator may make this demonstration in the following manner:

2.1.1.1 For existing units with fuel usage data from fuel flowmeters, if data are submitted from a previous year demonstrating that the total diverted yearly fuel does not exceed 5% of the total fuel used; or

2.1.1.2 For new units which do not have historical data, if a letter is submitted signed by the designated representative certifying that, in the future, the diverted fuel will not exceed 5.0% of the total annual fuel usage; or

2.1.1.3 By using a method approved by the Administrator under §75.66(d).

2.1.2 Install and use fuel flowmeters meeting the requirements of this appendix in a pipe going to each unit, or install and use a fuel flowmeter in a common pipe header (as defined in §72.2). However, the use of a fuel flowmeter in a common pipe header and the provisions of sections 2.1.2.1 and 2.1.2.2 of this appendix shall not apply to any unit that is using the provisions of subpart H of this part to monitor, record, and report NO_X mass emissions under a State or federal NO_X mass emission reduction program, unless both of the following are true: all of the units served by the common pipe are affected units, and all of the units have similar efficiencies. When a fuel flowmeter is installed in a common pipe header, proceed as follows:

2.1.2.1 Measure the fuel flow rate in the common pipe, and combine SO_2 mass emissions (Acid Rain Program units only) for the affected units for recordkeeping and compliance purposes; and

2.1.2.2 Apportion the heat input rate measured at the common pipe to the individual units, using Equation F–21a, F–21b, or F–21d in appendix F to this part.

2.1.3 For a gas-fired unit or an oil-fired unit that continuously or frequently combusts a supplemental fuel for flame stabilization or safety purposes, measure the flow rate of the supplemental fuel with a fuel flowmeter meeting the requirements of this appendix.

2.1.4 Situations in Which Certified Flowmeter is Not Required

2.1.4.1 Start-up or Ignition Fuel

For an oil-fired unit that uses gas solely for start-up or burner ignition, a gas-fired unit that uses oil solely for start-up or burner ignition, or an oil-fired unit that uses a different grade of oil solely for start-up or

burner ignition, a fuel flowmeter for the start-up fuel is permitted but not required. Estimate the volume of oil combusted for each start-up or ignition either by using a fuel flowmeter or by using the dimensions of the storage container and measuring the depth of the fuel in the storage container before and after each start-up or ignition. A fuel flowmeter used solely for start-up or ignition fuel is not subject to the calibration requirements of sections 2.1.5 and 2.1.6 of this appendix. Gas combusted solely for start-up or burner ignition does not need to be measured separately.

2.1.4.2 Gas or Oil Flowmeter Used for Commercial Billing

A gas or oil flowmeter used for commercial billing of natural gas or oil may be used to measure, record, and report hourly fuel flow rate. A gas or oil flowmeter used for commercial billing of natural gas or oil is not required to meet the certification requirements of section 2.1.5 of this appendix or the quality assurance requirements of section 2.1.6 of this appendix under the following circumstances:

(a) The gas or oil flowmeter is used for commercial billing under a contract, provided that the company providing the gas or oil under the contract and each unit combusting the gas or oil do not have any common owners and are not owned by subsidiaries or affiliates of the same company;

(b) The designated representative reports hourly records of gas or oil flow rate, heat input rate, and emissions due to combustion of natural gas or oil;

(c) The designated representative also reports hourly records of heat input rate for each unit, if the gas or oil flowmeter is on a common pipe header, consistent with section 2.1.2 of this appendix;

(d) The designated representative reports hourly records directly from the gas or oil flowmeter used for commercial billing if these records are the values used, without adjustment, for commercial billing, or reports hourly records using the missing data procedures of section 2.4 of this appendix if these records are not the values used, without adjustment, for commercial billing; and

(e) The designated representative identifies the gas or oil flowmeter in the unit's monitoring plan.

2.1.4.3 Emergency Fuel

The designated representative of a unit that is restricted by its Federal, State or local permit to combusting a particular fuel only during emergencies where the primary fuel is not available is exempt from certifying a fuel flowmeter for use during combustion of the emergency fuel. During any hour in which the emergency fuel is combusted, report the hourly heat input to be the maximum rated heat input of the unit for the fuel. Use the maximum potential sulfur content for the fuel (from Table D–6 of this appendix) and the fuel flow rate corresponding to the maximum hourly heat input to calculate the hourly SO_2 mass emission rate, using Equations D–2 through D–4 (as applicable). Alternatively, if a certified fuel flowmeter is available for the emergency fuel, you may use the measured hourly fuel flow rates in the calculations. Also, if daily samples or weekly composite samples (fuel oil, only) of the fuel's total sulfur content, GCV, and (if applicable) density are taken during the combustion of the emergency fuel, as described in section 2.2 or 2.3 of this appendix, the sample results may be used to calculate the hourly SO_2 emissions and heat input rates, in lieu of using maximum potential values. The designated representative shall also provide notice under §75.61(a)(6) for each period when the emergency fuel is combusted.

2.1.5 Initial Certification Requirement for all Fuel Flowmeters

For the purposes of initial certification, each fuel flowmeter used to meet the requirements of this protocol shall meet a flowmeter accuracy of 2.0 percent of the upper range value (i.e. maximum fuel flow rate measurable by the flowmeter) across the range of fuel flow rate to be measured at the unit. Flowmeter accuracy may be determined under section 2.1.5.1 of this appendix for initial certification in any of the following ways (as applicable): by design (orifice, nozzle, and venturi-type flowmeters, only) or by measurement under laboratory conditions; by the manufacturer; by an independent laboratory; or by the owner or operator. Flowmeter accuracy may also be determined under section 2.1.5.2 of this appendix by in-line comparison against a reference flowmeter.

2.1.5.1 Use the procedures in the following standards to verify flowmeter accuracy or design, as appropriate to the type of flowmeter: ASME MFC–3M–2004, Measurement of Fluid Flow in Pipes Using Orifice, Nozzle, and Venturi; ASME MFC–4M–1986 (Reaffirmed 1997), Measurement of Gas Flow by Turbine Meters; American Gas Association Report No. 3, Orifice Metering of Natural Gas and Other Related Hydrocarbon Fluids Part 1: General Equations and Uncertainty Guidelines (October 1990 Edition), Part 2: Specification and Installation Requirements (February 1991 Edition), and Part 3: Natural Gas Applications (August 1992 edition) (excluding the modified flow-calculation method in part 3); Section 8, Calibration from American Gas Association Transmission Measurement Committee Report No. 7: Measurement of Gas by Turbine Meters (Second Revision, April 1996); ASME–MFC–5M–

1985, (Reaffirmed 1994), Measurement of Liquid Flow in Closed Conduits Using Transit-Time Ultrasonic Flowmeters; ASME MFC–6M–1998, Measurement of Fluid Flow in Pipes Using Vortex Flowmeters; ASME MFC–7M–1987 (Reaffirmed 1992), Measurement of Gas Flow by Means of Critical Flow Venturi Nozzles; ISO 8316: 1987(E) Measurement of Liquid Flow in Closed Conduits-Method by Collection of the Liquid in a Volumetric Tank; American Petroleum Institute (API) Manual of Petroleum Measurement Standards, Chapter 4—Proving Systems, Section 2—Pipe Provers (Provers Accumulating at Least 10,000 Pulses), Second Edition, March 2001, and Section 5—Master-Meter Provers, Second Edition, May 2000; American Petroleum Institute (API) Manual of Petroleum Measurement Standards, Chapter 22—Testing Protocol, Section 2—Differential Pressure Flow Measurement Devices, First Edition, August 2005; or ASME MFC–9M–1988 (Reaffirmed 2001), Measurement of Liquid Flow in Closed Conduits by Weighing Method, for all other flowmeter types (all incorporated by reference under §75.6 of this part). The Administrator may also approve other procedures that use equipment traceable to National Institute of Standards and Technology standards. Document such procedures, the equipment used, and the accuracy of the procedures in the monitoring plan for the unit, and submit a petition signed by the designated representative under §75.66(c). If the flowmeter accuracy exceeds 2.0 percent of the upper range value, the flowmeter does not qualify for use under this part.

2.1.5.2 (a) Alternatively, determine the flowmeter accuracy of a fuel flowmeter used for the purposes of this part by comparing it to the measured flow from a reference flowmeter which has been either designed according to the specifications of American Gas Association Report No. 3 or ASME MFC–3M–1989, as cited in section 2.1.5.1 of this appendix, or tested for accuracy during the previous 365 days, using a standard listed in section 2.1.5.1 of this appendix or other procedure approved by the Administrator under §75.66 (all standards incorporated by reference under §75.6). Any secondary elements, such as pressure and temperature transmitters, must be calibrated immediately prior to the comparison. Perform the comparison over a period of no more than seven consecutive unit operating days. Compare the average of three fuel flow rate readings over 20 minutes or longer for each meter at each of three different flow rate levels. The three flow rate levels shall correspond to:

(1) Normal full unit operating load,

(2) Normal minimum unit operating load,

(3) A load point approximately equally spaced between the full and minimum unit operating loads, and

(b) Calculate the flowmeter accuracy at each of the three flow levels using the following equation:

$$ACC = \frac{|R - A|}{URV} \times 100 \qquad \text{(Eq. D-1)}$$

Where:

ACC=Flowmeter accuracy at a particular load level, as a percentage of the upper range value.

R=Average of the three flow measurements of the reference flowmeter.

A=Average of the three measurements of the flowmeter being tested.

URV=Upper range value of fuel flowmeter being tested (i.e. maximum measurable flow).

(c) Notwithstanding the requirement for calibration of the reference flowmeter within 365 days prior to an accuracy test, when an in-place reference meter or prover is used for quality assurance under section 2.1.6 of this appendix, the reference meter calibration requirement may be waived if, during the previous in-place accuracy test with that reference meter, the reference flowmeter and the flowmeter being tested agreed to within ±1.0 percent of each other at all levels tested. This exception to calibration and flowmeter accuracy testing requirements for the reference flowmeter shall apply for periods of no longer than five consecutive years (i.e., 20 consecutive calendar quarters).

2.1.5.3 If the flowmeter accuracy exceeds the specification in section 2.1.5 of this appendix, the flowmeter does not qualify for use for this appendix. Either recalibrate the flowmeter until the flowmeter accuracy is within the performance specification, or replace the flowmeter with another one that is demonstrated to meet the performance specification. Substitute for fuel flow rate using the missing data procedures in section 2.4.2 of this appendix until quality-assured fuel flow data become available.

2.1.5.4 For purposes of initial certification, when a flowmeter is tested against a reference fuel flow rate (i.e., fuel flow rate from another fuel flowmeter under section 2.1.5.2 of this appendix or flow rate from a procedure performed according to a standard incorporated by reference under section 2.1.5.1 of this appendix), report the results of flowmeter accuracy tests in a manner consistent with Table D–1.

TABLE D–1—TABLE OF FLOWMETER ACCURACY RESULTS

Test number:_____ Test completion date [1]:_____ Test completion time [1]:_____
Reinstallation date [2] (for testing under 2.1.5.1 only):_____ Reinstallation time [2]:_____

TABLE D–1—TABLE OF FLOWMETER ACCURACY RESULTS—Continued

Unit or pipe ID: Component/System ID:
Flowmeter serial number: Upper range value:
Units of measure for flowmeter and reference flow readings:

Measurement level (percent of URV)	Run No.	Time of run (HHMM)	Candidate flowmeter reading	Reference flow reading	Percent accuracy (percent of URV)
Low (Minimum) level	1				
___ percent[3] of URV	2				
	3				
	Average				
Mid-level	1				
___ percent[3] of URV	2				
	3				
	Average				
High (Maximum) level	1				
___ percent[3] of URV	2				
	3				
	Average				

[1] Report the date, hour, and minute that all test runs were completed.
[2] For laboratory tests not performed inline, report the date and hour that the fuel flowmeter was reinstalled following the test.
[3] It is required to test at least at three different levels: (1) normal full unit operating load, (2) normal minimum unit operating load, and (3) a load point approximately equally spaced between the full and minimum unit operating loads.

2.1.6 Quality Assurance

(a) Test the accuracy of each fuel flowmeter prior to use under this part and at least once every four fuel flowmeter QA operating quarters, as defined in §72.2 of this chapter, thereafter. Notwithstanding these requirements, no more than 20 successive calendar quarters shall elapse after the quarter in which a fuel flowmeter was last tested for accuracy without a subsequent flowmeter accuracy test having been conducted. Test the flowmeter accuracy more frequently if required by manufacturer specifications.

(b) Except for orifice-, nozzle-, and venturi-type flowmeters, perform the required flowmeter accuracy testing using the procedures in either section 2.1.5.1 or section 2.1.5.2 of this appendix. Each fuel flowmeter must meet the accuracy specification in section 2.1.5 of this appendix.

(c) For orifice-, nozzle-, and venturi-type flowmeters, either perform the required flowmeter accuracy testing using the procedures in section 2.1.5.2 of this appendix or perform a transmitter accuracy test for the initial certification and once every four fuel flowmeter QA operating quarters thereafter. Perform a primary element visual inspection for the initial certification and once every 12 calendar quarters thereafter, according to the procedures in sections 2.1.6.1 through 2.1.6.4 of this appendix for periodic quality assurance.

(d) Notwithstanding the requirements of this section, if the procedures of section 2.1.7 (fuel flow-to-load test) of this appendix are performed during each fuel flowmeter QA operating quarter, subsequent to a required flowmeter accuracy test or (if applicable) transmitter accuracy test and primary element inspection, those procedures may be used to meet the requirement for periodic quality assurance testing for a period of up to 20 calendar quarters from the previous accuracy test or (if applicable) transmitter accuracy test and primary element inspection.

(e) When accuracy testing of the orifice, nozzle, or venturi meter is performed according to section 2.1.5.2 of this appendix, record the information displayed in Table D–1 in this section. At a minimum, record the overall accuracy results for the fuel flowmeter at the three flow rate levels specified in section 2.1.5.2 of this appendix.

(f) Report the results of all fuel flowmeter accuracy tests, transmitter or transducer accuracy tests, and primary element inspections, as applicable, in the emissions report for the quarter in which the quality assurance tests are performed, using the electronic format specified by the Administrator under §75.64.

2.1.6.1 Transmitter or Transducer Accuracy Test for Orifice-, Nozzle-, and Venturi-Type Flowmeters

(a) Calibrate the differential pressure transmitter or transducer, static pressure transmitter or transducer, and temperature transmitter or transducer, as applicable, using equipment that has a current certificate of traceability to NIST standards. Check the calibration of each transmitter or transducer by comparing its readings to that of the NIST traceable equipment at least once at each of the following levels: the zero-level and at least two other upscale levels (e.g., ''mid'' and ''high''), such that the full range of transmitter or transducer readings

corresponding to normal unit operation is represented. For temperature transmitters, the zero and upscale levels may correspond to fixed reference points, such as the freezing point or boiling point of water.

(b) Calculate the accuracy of each transmitter or transducer at each level tested, using the following equation:

$$ACC = \frac{|R - T|}{FS} \times 100 \qquad \text{(Eq. D-1a)}$$

Where:

ACC = Accuracy of the transmitter or transducer as a percentage of full-scale.

R = Reading of the NIST traceable reference value (in milliamperes, inches of water, psi, or degrees).

T = Reading of the transmitter or transducer being tested (in milliamperes, inches of water, psi, or degrees, consistent with the units of measure of the NIST traceable reference value).

FS = Full-scale range of the transmitter or transducer being tested (in milliamperes, inches of water, psi, or degrees, consistent with the units of measure of the NIST traceable reference value).

(c) If each transmitter or transducer meets an accuracy of 1.0 percent of its full-scale range at each level tested, the fuel flowmeter accuracy of 2.0 percent is considered to be met at all levels. If, however, one or more of the transmitters or transducers does not meet an accuracy of 1.0 percent of full-scale at a particular level, then the owner or operator may demonstrate that the fuel flowmeter meets the total accuracy specification of 2.0 percent at that level by using one of the following alternative methods. If, at a particular level, the sum of the individual accuracies of the three transducers is less than or equal to 4.0 percent, the fuel flowmeter accuracy specification of 2.0 percent is considered to be met for that level. Or, if at a particular level, the total fuel flowmeter accuracy is 2.0 percent or less, when calculated in accordance with Part 1 of American Gas Association Report No. 3, General Equations and Uncertainty Guidelines, the flowmeter accuracy requirement is considered to be met for that level.

2.1.6.2 Recordkeeping for Transmitter or Transducer Accuracy Results

(a) Record the accuracy of the orifice, nozzle, or venturi meter or its individual transmitters or transducers and keep this information in a file at the site or other location suitable for inspection.

TABLE D–2—TABLE OF FLOWMETER TRANSMITTER OR TRANSDUCER ACCURACY RESULTS

Test number:_____ Test completion date: _____ Unit or pipe ID: _____
Flowmeter serial number: Component/System ID:
Full-scale value: Units of measure:[3]
Transducer/Transmitter Type (check one):
____ Differential Pressure
____ Static Pressure
____ Temperature

Measurement level (percent of full-scale)	Run number (if multiple runs)[2]	Run time (HHMM)	Transmitter/ transducer input (pre-calibration)	Expected transmitter/ transducer output (reference)	Actual transmitter/ transducer output[3]	Percent accuracy (percent of full-scale)
Low (Minimum) level						
____ percent[1] of full-scale	.....					
Mid-level						
____ percent[1] of full-scale	.....					
(If tested at more than 3 levels)						
2nd Mid-level						
____ percent[1] of full-scale	.....					
(If tested at more than 3 levels)						
3rd Mid-level						
____ percent[1] of full-scale	.....					
High (Maximum) level						
____ percent[1] of full-scale	.....					

[1] At a minimum, it is required to test at zero-level and at least two other levels across the range of the transmitter or transducer readings corresponding to normal unit operation.

[2] It is required to test at least once at each level.

[3] Use the same units of measure for all readings (e.g., use degrees (°), inches of water (in H_2O), pounds per square inch (psi), or milliamperes (ma) for both transmitter or transducer readings and reference readings).

(b)–(c) [Reserved]

2.1.6.3 Failure of Transducer(s) or Transmitter(s)

If, during a transmitter or transducer accuracy test conducted according to section 2.1.6.1 of this appendix, the flowmeter accuracy specification of 2.0 percent is not met at any of the levels tested, repair or replace transmitter(s) or transducer(s) as necessary until the flowmeter accuracy specification has been achieved at all levels. (Note that only transmitters or transducers which are repaired or replaced need to be re-tested; however, the re-testing is required at all three measurement levels, to ensure that the flowmeter accuracy specification is met at each level). The fuel flowmeter is ''out-of-control'' and data from the flowmeter are considered invalid, beginning with the date and hour of the failed accuracy test and continuing until the date and hour of completion of a successful transmitter or transducer accuracy test at all levels. In addition, if, during normal operation of the fuel flowmeter, one or more transmitters or transducers malfunction, data from the fuel flowmeter shall be considered invalid from the hour of the transmitter or transducer failure until the hour of completion of a successful 3-level transmitter or transducer accuracy test. During fuel flowmeter out-of-control periods, provide data from another fuel flowmeter that meets the requirements of §75.20(d) and section 2.1.5 of this appendix, or substitute for fuel flow rate using the missing data procedures in section 2.4.2 of this appendix. Record and report test data and results, consistent with sections 2.1.6.1 and 2.1.6.2 of this appendix and §75.59.

2.1.6.4 Primary Element Inspection

(a) Conduct a visual inspection of the orifice, nozzle, or venturi meter at least once every twelve calendar quarters. Notwithstanding this requirement, the procedures of section 2.1.7 of this appendix may be used to reduce the inspection frequency of the orifice, nozzle, or venturi meter to at least once every twenty calendar quarters. The inspection may be performed using a baroscope. If the visual inspection is failed (if the orifice, nozzle, or venturi meter has become damaged or corroded), then:

(1) Replace the primary element with another primary element meeting the requirements of American Gas Association Report No. 3 or ASME MFC–3M–1989, as cited in section 2.1.5.1 of this appendix (both standards incorporated by reference under §75.6). If the primary element size is changed, also calibrate the transmitters or transducers, consistent with the new primary element size;

(2) Replace the primary element with another primary element, and demonstrate that the overall flowmeter accuracy meets the accuracy specification in section 2.1.5 of this appendix, using the procedures of section 2.1.5.2 of this appendix; or

(3) Restore the damaged or corroded primary element to ''as new'' condition; determine the overall accuracy of the flowmeter, using either the specifications of American Gas Association Report No. 3 or ASME MFC–3M–1989, as cited in section 2.1.5.1 of this appendix (both standards incorporated by reference under §75.6); and retest the transmitters or transducers prior to providing quality-assured data from the flowmeter.

(b) Data from the fuel flowmeter are considered invalid, beginning with the date and hour of a failed visual inspection and continuing until the date and hour when:

(1) The damaged or corroded primary element is replaced with another primary element meeting the requirements of American Gas Association Report No. 3 or ASME MFC–3M–1989, as cited in section 2.1.5.1 of this appendix (both standards incorporated by reference under §75.6) and, if applicable, the transmitters have been successfully recalibrated;

(2) The damaged or corroded primary element is replaced, and the overall accuracy of the flowmeter is demonstrated to meet the accuracy specification in section 2.1.5 of this appendix, using the procedures of section 2.1.5.2 of this appendix; or

(3) The restored primary element is installed to meet the requirements of American Gas Association Report No. 3 or ASME MFC–3M–1989, as cited in section 2.1.5.1 of this appendix (both standards incorporated by reference under §75.6) and its transmitters or transducers are retested to meet the accuracy specification in section 2.1.6.1 of this appendix.

(c) During each period of invalid fuel flowmeter data described in paragraph (b) of this section, provide data from another fuel flowmeter that meets the requirements of §75.20(d) and section 2.1.5 of this appendix, or substitute for fuel flow rate using the missing data procedures in section 2.4.2 of this appendix.

2.1.7 Fuel Flow-to-Load Quality Assurance Testing for Certified Fuel Flowmeters

The procedures of this section may be used as an optional supplement to the quality assurance procedures in section 2.1.5.1, 2.1.5.2, 2.1.6.1, or 2.1.6.4 of this appendix when conducting periodic quality assurance testing of a certified fuel flowmeter. Note, however, that these procedures may not be used unless the 168-hour baseline data requirement of section 2.1.7.1 of this appendix has been met. If, following a flowmeter accuracy test or (if applicable) a flowmeter transmitter test and primary element inspection, the procedures of this section are performed during each subsequent fuel flowmeter QA operating quarter, as defined in §72.2 of this chapter

(excluding the quarter(s) in which the baseline data are collected), then these procedures may be used to meet the requirement for periodic quality assurance for a period of up to 20 calendar quarters from the previous periodic quality assurance procedure(s) performed according to sections 2.1.5.1, 2.1.5.2, or 2.1.6.1 through 2.1.6.4 of this appendix. The procedures of this section are not required for any quarter in which a flowmeter accuracy test or (if applicable) a transmitter accuracy test and a primary element inspection, are conducted. Notwithstanding the requirements of §75.57(a), when using the procedures of this section, keep records of the test data and results from the previous flowmeter accuracy test under section 2.1.5.1 or 2.1.5.2 of this appendix, records of the test data and results from the previous transmitter or transducer accuracy test under section 2.1.6.1 of this appendix for orifice-, nozzle-, and venturi-type fuel flowmeters, and records of the previous visual inspection of the primary element required under section 2.1.6.4 of this appendix for orifice-, nozzle-, and venturi-type fuel flowmeters until the next flowmeter accuracy test, transmitter accuracy test, or visual inspection is performed, even if the previous flowmeter accuracy test, transmitter accuracy test, or visual inspection was performed more than three years previously.

2.1.7.1 Baseline Flow Rate-to-Load Ratio or Heat Input-to-Load Ratio

(a) Determine R_{base}, the baseline value of the ratio of fuel flow rate to unit load, following each successful periodic quality assurance procedure performed according to sections 2.1.5.1, 2.1.5.2, or 2.1.6.1 and 2.1.6.4 of this appendix. Establish a baseline period of data consisting, at a minimum, of 168 hours of quality-assured fuel flowmeter data. Baseline data collection shall begin with the first hour of fuel flowmeter operation following completion of the most recent quality assurance procedure(s), during which only the fuel measured by the fuel flowmeter is combusted (e.g., only gas, only residual oil, or only diesel fuel is combusted by the unit). During the baseline data collection period, the owner or operator may exclude as non-representative any hour in which the unit is ''ramping'' up or down, (i.e., the load during the hour differs by more than 15.0 percent from the load in the previous or subsequent hour) and may exclude any hour in which the unit load is in the lower 25.0 percent of the range of operation, as defined in section 6.5.2.1 of appendix A to this part (unless operation in this lower 25.0 percent of the range is considered normal for the unit). The baseline data must be obtained no later than the end of the fourth calendar quarter following the calendar quarter of the most recent quality assurance procedure for that fuel flowmeter. For orifice-, nozzle-, and venturi-type fuel flowmeters, if the fuel flow-to-load ratio is to be used as a supplement both to the transmitter accuracy test under section 2.1.6.1 of this appendix and to primary element inspections under section 2.1.6.4 of this appendix, then the baseline data must be obtained after both procedures are completed and no later than the end of the fourth calendar quarter following the calendar quarter in which both procedures were completed. From these 168 (or more) hours of baseline data, calculate the baseline fuel flow rate-to-load ratio as follows:

$$R_{base} = \frac{Q_{base}}{L_{avg}} \qquad \text{(Eq. D-1b)}$$

where:

R_{base} = Value of the fuel flow rate-to-load ratio during the baseline period; 100 scfh/MWe, 100 scfh/klb per hour steam load, or 100 scfh/mmBtu per hour thermal output for gas-firing; (lb/hr)/MWe, (lb/hr)/klb per hour steam load, or (lb/hr)/mmBtu per hour thermal output for oil-firing.

Q_{base} = Arithmetic average fuel flow rate measured by the fuel flowmeter during the baseline period, 100 scfh for gas-firing and lb/hr for oil-firing.

L_{avg} = Arithmetic average unit load during the baseline period, megawatts, 1000 lb/hr of steam, or mmBtu/hr thermal output.

(b) In Equation D–1b, for a fuel flowmeter installed on a common pipe header, L_{avg} is the sum of the operating loads of all units that received fuel through the common pipe header during the baseline period, divided by the total number of hours of fuel flow rate data collected during the baseline period. For a unit that receives the same type of fuel through multiple pipes, Q_{base} is the sum of the fuel flow rates during the baseline period from all of the pipes, divided by the total number of hours of fuel flow rate data collected during the baseline period. Round off the value of R_{base} to the nearest tenth.

(c) Alternatively, a baseline value of the gross heat rate (GHR) may be determined in lieu of R_{base}. The baseline value of the GHR, GHR_{base}, shall be determined as follows:

$$(GHR)_{base} = \frac{(\text{Heat Input})_{avg}}{L_{avg}} \times 1000 \qquad \text{(Eq. D-1c)}$$

Where:

$(GHR)_{base}$ = Baseline value of the gross heat rate during the baseline period, Btu/kwh, Btu/lb steam load, or 1000mmBtu heat input/mmBtu thermal output.

$(\text{Heat Input})_{avg}$ = Average (mean) hourly heat input rate recorded by the fuel flowmeter during the baseline period, as determined using the average fuel flow rate and the fuel GCV in the applicable equation in appendix F to this part, mmBtu/hr.

L_{avg} = Average (mean) unit load during the baseline period, megawatts, 1000 lb/hr of steam, or mmBtu/hr thermal output.

(d) Report the current value of R_{base} (or GHR_{base}) and the completion date of the associated quality assurance procedure in each electronic quarterly report required under §75.64.

(e) If a unit co-fires different fuels (*e.g.*, oil and natural gas) as its normal mode of operation, the gross heat rate option in paragraph (c) of this section may be used to determine a value of $(GHR)_{base}$, as follows. Derive the baseline data during co-fired hours. Then, use Equation D–1c to calculate $(GHR)_{base}$, making sure that each hourly unit heat input rate used to calculate $(\text{Heat Input})_{avg}$ includes the contribution of each type of fuel.

2.1.7.2 Data Preparation and Analysis

(a) Evaluate the fuel flow rate-to-load ratio (or GHR) for each fuel flowmeter QA operating quarter, as defined in §72.2 of this chapter. At the end of each fuel flowmeter QA operating quarter, use Equation D–1d in this appendix to calculate R_h, the hourly fuel flow-to-load ratio, for every quality-assured hourly average fuel flow rate obtained with a certified fuel flowmeter. Alternatively, the owner or operator may exclude non-representative hours from the data analysis, as described in section 2.1.7.3 of this appendix, prior to calculating the values of R_h.

$$R_h = \frac{Q_h}{L_h} \qquad \text{(Eq. D-1d)}$$

where:

R_h = Hourly value of the fuel flow rate-to-load ratio; 100 scfh/MWe, (lb/hr)/MWe, 100 scfh/1000 lb/hr of steam load, (lb/hr)/1000 lb/hr of steam load, 100 scfh/(mmBtu/hr of steam load), or (lb/hr)/(mmBtu/hr thermal output).

Q_h = Hourly fuel flow rate, as measured by the fuel flowmeter, 100 scfh for gas-firing or lb/hr for oil-firing.

L_h = Hourly unit load, megawatts, 1000 lb/hr of steam, or mmBtu/hr thermal output.

(b) For a fuel flowmeter installed on a common pipe header, Lh shall be the sum of the hourly operating loads of all units that receive fuel through the common pipe header. For a unit that receives the same type of fuel through multiple pipes, Q_h will be the sum of the fuel flow rates from all of the pipes. Round off each value of R_h to the nearest tenth.

(c) Alternatively, calculate the hourly gross heat rates (GHR) in lieu of the hourly flow-to-load ratios. If this option is selected, calculate each hourly GHR value as follows:

$$(GHR)_h = \frac{(\text{Heat Input})_h}{L_h} \times 1000 \qquad \text{(Eq. D-1e)}$$

Where:

$(GHR)_h$ = Hourly value of the gross heat rate, Btu/kwh, Btu/lb steam load, or mmBtu heat input/mmBtu thermal output.

$(\text{Heat Input})_h$ = Hourly heat input rate, as determined using the hourly fuel flow rate and the fuel GCV in the applicable equation in appendix F to this part, mmBtu/hr.

L_h = Hourly unit load, megawatts, 1000 lb/hr of steam, or mmBtu/hr thermal output.

(d) Evaluate the calculated flow rate-to-load ratios (or gross heat rates) as follows.

(1) Perform a separate data analysis for each fuel flowmeter system following the procedures of this section. Base each analysis on a minimum of 168 hours of data. If, for a particular fuel flowmeter system, fewer than 168 hourly flow-to-load ratios (or GHR values) are available, or, if the baseline data collection period is still in progress at the end of the quarter and fewer than four calendar quarters have elapsed since the quarter in which the last successful fuel flowmeter system accuracy test was performed, a flow-to-load (or GHR) evaluation is not required for that flowmeter system for that calendar quarter. A one-quarter extension of the deadline for the next fuel flowmeter system accuracy test may be claimed for a quarter in which there is insufficient hourly data available to analyze or a quarter that ends with the baseline data collection period still in progress.

(2) For a unit that normally co-fires different types of fuel (e.g., oil and natural gas), include the contribution of each type of fuel in the value of $(\text{Heat Input})_h$, when using Equation D–1e.

(e) For each hourly flow-to-load ratio or GHR value, calculate the percentage difference (percent D_h) from the baseline fuel flow-to-load ratio using Equation D–1f.

$$\%D_h = \frac{|R_{base} - R_h|}{R_{base}} \times 100 \qquad \text{(Eq. D-1f)}$$

Where:

$\%D_h$ = Absolute value of the percentage difference between the hourly fuel flow rate-to-load ratio and the baseline value of the fuel flow rate-to-load ratio (or hourly and baseline GHR).

R_h = The hourly fuel flow rate-to-load ratio (or GHR).

R_{base} = The value of the fuel flow rate-to-load ratio (or GHR) from the baseline period, determined in accordance with section 2.1.7.1 of this appendix.

(f) Consistently use R_{base} and R_h in Equation D–1f if the fuel flow-to-load ratio is being evaluated, and consistently use $(GHR)_{base}$ and $(GHR)_h$ in Equation D–1f if the gross heat rate is being evaluated.

(g) Next, determine the arithmetic average of all of the hourly percent difference (percent D_h) values using Equation D–1g, as follows:

$$E_f = \sum_{h=1}^{q} \frac{\%D_h}{q} \qquad \text{(Eq. D-1g)}$$

Where:

E_f = Quarterly average percentage difference between hourly flow rate-to-load ratios and the baseline value of the fuel flow rate-to-load ratio (or hourly and baseline GHR).

$\%D_h$ = Percentage difference between the hourly fuel flow rate-to-load ratio and the baseline value of the fuel flow rate-to-load ratio (or hourly and baseline GHR).

q = Number of hours used in fuel flow-to-load (or GHR) evaluation.

(h) When the quarterly average load value used in the data analysis is greater than 50 MWe (or 500 klb steam per hour), the results of a quarterly fuel flow rate-to-load (or GHR) evaluation are acceptable and no further action is required if the quarterly average percentage difference (E_f) is no greater than 10.0 percent. When the arithmetic average of the hourly load values used in the data analysis is ≤50 MWe (or 500 klb steam per hour), the results of the analysis are acceptable if the value of E_f is no greater than 15.0 percent. For units that normally co-fire different types of fuel, if the GHR option is used, apply the test results to each fuel flowmeter system used during the quarter.

2.1.7.3 Optional Data Exclusions

(a) If E_f is outside the limits in section 2.1.7.2(h) of this appendix, the owner or operator may re-examine the hourly fuel flow rate-to-load ratios (or GHRs) that were used for the data analysis and may identify and exclude fuel flow-to-load ratios or GHR values for any non-representative hours, provided that such data exclusions were not previously made under section 2.1.7.2(a) of this appendix. Specifically, the R_h or $(GHR)_h$ values for the following hours may be considered non-representative:

(1) For units that do not normally co-fire fuels, any hour in which the unit combusted another fuel in addition to the fuel measured by the fuel flowmeter being tested; or

(2) Any hour for which the load differed by more than ±15.0 percent from the load during either the preceding hour or the subsequent hour; or

(3) For units that normally co-fire different fuels, any hour in which the unit burned only one type of fuel; or

(4) Any hour for which the unit load was in the lower 25.0 percent of the range of operation, as defined in section 6.5.2.1 of appendix A to this part (unless operation in the lower 25.0 percent of the range is considered normal for the unit).

(b) After identifying and excluding all non-representative hourly fuel flow-to-load ratios or GHR values, analyze the quarterly fuel flow rate-to-load data a second time. If fewer than 168 hourly fuel flow-to-load ratio or GHR values remain after the allowable data exclusions, a fuel flow-to-load ratio or GHR analysis is not required for that quarter, and a one-quarter extension of the fuel flowmeter accuracy test deadline may be claimed.

2.1.7.4 Consequences of Failed Fuel Flow-to-Load Ratio Test

(a) If E_f is outside the applicable limit in section 2.1.7.2(h) of this appendix (after analysis using any optional data exclusions under section 2.1.7.3 of this appendix), perform transmitter accuracy tests according to section 2.1.6.1 of this appendix for orifice-, nozzle-, and venturi-type flowmeters, or perform a fuel flowmeter accuracy test, in accordance with section 2.1.5.1 or 2.1.5.2 of this appendix, for each fuel flowmeter for which E_f is outside of the applicable limit. In addition, for an orifice-, nozzle-, or venturi-type fuel flowmeter, repeat the fuel flow-to-load ratio comparison of section 2.1.7.2 of this appendix using six to twelve hours of data following a passed transmitter accuracy test in order to verify that no significant corrosion has affected the primary element. If, for the abbreviated 6-to-12 hour test, the orifice-, nozzle-, or venturi-type fuel flowmeter is not able to meet the limit in section 2.1.7.2 of this appendix, then perform a visual inspection of the primary element according to section 2.1.6.4 of this appendix, and repair or replace the primary element, as necessary.

(b) Substitute for fuel flow rate, for any hour when that fuel is combusted, using the missing data procedures in section 2.4.2 of this appendix, beginning with the first hour of the calendar quarter following the quarter for which E_f was found to be outside the applicable limit and continuing until quality-assured fuel flow data become available. Following a failed flow rate-to-load or GHR evaluation, data from the flowmeter shall not be considered quality-assured until the hour in which all required flowmeter accuracy tests, transmitter accuracy tests, visual inspections and diagnostic tests have been passed. Additionally, a new value of R_{base} or $(GHR)_{base}$ shall be established no later than two fuel flowmeter QA operating quarters (as defined in §72.2 of this chapter) after the quarter in which the required quality assurance tests are completed (note that for orifice-, nozzle-, or venturi-type fuel flowmeters, establish a new value of R_{base} or $(GHR)_{base}$ only if both a transmitter accuracy test and a primary element inspection have been performed).

2.1.7.5 Test Results

Report the results of each quarterly flow rate-to-load (or GHR) evaluation, as determined from Equation D–1g, in the electronic quarterly report required under §75.64. Table D–3 is provided as a reference on the type of information to be recorded under §75.59 and reported under §75.64.

TABLE D–3—BASELINE INFORMATION AND TEST RESULTS FOR FUEL FLOW-TO-LOAD TEST

TABLE D-3. -- BASELINE INFORMATION AND TEST RESULTS FOR FUEL FLOW-TO-LOAD TEST

Plant name:_____ State:____ ORIS code:_____ Unit/pipe ID #: _____ Fuel flowmeter system ID :___ Calendar quarter (1st, 2nd, 3rd, 4th) and year:_____ Range of operation: _____ to _____ MWe or klb steam/hr (indicate units)	
Reported Data Elements	
Baseline period	Quarterly analysis
Completion date and time of most recent QA sequence, i.e., primary element inspection and transmitter calibration (orifice-, nozzle-, and venturi-type flowmeters only). __/__/__ __:__	Number of hours excluded from quarterly average due to co-firing different fuels (where co-firing is not normal operation):_____ hrs.
Completion date and time of most recent flowmeter or accuracy test (all other flowmeters) __/__/__ __:__	Number of hours excluded from quarterly average due to single-fuel combustion (where co-firing is normal operation):_____ hrs.
Beginning date and time of baseline period __/__/__ __:__	Number of hours excluded from quarterly average due to ramping load:_____ hrs.
End date and time of baseline period __/__/__ __:__	Number of hours in the lower 25.0 percent of the range of operation excluded from quarterly average: _____hrs.
Average fuel flow rate_____ (100 scfh for gas and lb/hr for oil)	Number of hours included in quarterly average:_____ hrs.
Average load;_____ (MWe or 1000 lb steam/hr)	Quarterly percentage difference between hourly ratios and baseline ratio:_____ percent.
Baseline fuel flow-to-load ratio _____ Units of fuel flow-to-load:_____	Test result: pass, fail.
Baseline GHR: _____ Units of fuel flow-to-load:_____	
Number of hours excluded from baseline ratio or GHR due to ramping load: _____	
Number of hours in the lower 25.0 percent of the range of operation excluded from baseline ratio or GHR: hrs.	

2.2 Oil Sampling and Analysis

Perform sampling and analysis of oil to determine the following fuel properties for each type of oil combusted by a unit: percentage of sulfur by weight in the oil; gross calorific value (GCV) of the oil; and, if necessary, the density of the oil. Use the sulfur content, density, and gross calorific value, determined under the provisions of this section, to calculate SO_2 mass emission rate and heat input rate for each fuel using the applicable procedures of section 3 of this appendix. The designated representative may petition for reduced GCV and or density sampling under §75.66 if the fuel combusted has a consistent and relatively non-variable GCV or density.

TABLE D-4. -- OIL SAMPLING METHODS AND SULFUR, DENSITY AND GROSS CALORIFIC VALUE USED IN CALCULATIONS

Parameter	Sampling technique/frequency	Value used in calculations (except for missing data hours)
Oil Sulfur Content	Daily manual sampling	1. Highest sulfur content from previous 30 daily samples; or 2. Actual daily value.
	Flow proportional/weekly composite	Actual measured value.
	In storage tank (after addition of fuel to tank)	1. Actual measured value; or 2. Highest of all sampled values in previous calendar year, unless a higher sample value is obtained;[1] or 3. Maximum value allowed by contract, unless a higher sample value is obtained[1]
	As delivered (in delivery truck or barge).[1]	1. Highest of all sampled values in previous calendar year, unless a higher sample value is obtained;[1] or 2. Maximum value allowed by contract, unless a higher sample value is obtained[1]
Oil Density	Daily manual sampling	1. Use the highest density from the previous 30 daily samples; or 2. Actual measured value.
	Flow proportional/weekly composite	Actual measured value.
	In storage tank (after addition of fuel to tank)	1. Actual measured value; or 2. Highest of all sampled values in previous calendar year, unless a higher sample value is obtained;[1] or 3. Maximum value allowed by contract, unless a higher sample value is obtained[1]
	As delivered (in delivery truck or barge).[1]	1. Highest of all sampled values in previous calendar year, unless a higher sample value is obtained;[1] or 2. Maximum value allowed by contract, unless a higher sample value is obtained[1]
Oil GCV	Daily manual sampling	1. Highest fuel GCV from the previous 30 daily samples; or 2. Actual measured value.
	Flow proportional/weekly composite	Actual measured value.
	In storage tank (after addition of fuel to tank)	1. Actual measured value; or 2. Highest of all sampled values in previous calendar year, unless a higher sample value is obtained;[1] or 3. Maximum value allowed by contract, unless a higher sample value is obtained[1]
	As delivered (in delivery truck or barge).[1]	1. Highest of all sampled values in previous calendar year, unless a higher sample value is obtained;[1] or 2. Maximum value allowed by contract, unless a higher sample value is obtained[1]

[1] Assumed values may only be used if sulfur content, gross calorific value, or density of each sample is no greater than the assumed value used to calculate emissions or heat input. If a higher sample value is obtained, use the results of that sample analysis as the new assumed value.

2.2.1 When combusting oil, use one of the following methods to sample the oil (see Table D–4): sample from the storage tank for the unit after each addition of oil to the storage tank, in accordance with section 2.2.4.2 of this appendix; or sample from the fuel lot in the shipment tank or container upon receipt of each oil delivery or from the fuel lot in the oil supplier's storage container, in accordance with section 2.2.4.3 of this appendix; or use the flow proportional sampling methodology in section 2.2.3 of this appendix; or use the daily manual sampling methodology in section 2.2.4.1 of this appendix. For purposes of this appendix, a fuel lot of oil is the mass or volume of product oil

from one source (supplier or pretreatment facility), intended as one shipment or delivery (e.g., ship load, barge load, group of trucks, discrete purchase of diesel fuel through pipeline, etc.). A storage tank is a container at a plant holding oil that is actually combusted by the unit, such that no blending of any other fuel with the fuel in the storage tank occurs from the time that the fuel lot is transferred to the storage tank to the time when the fuel is combusted in the unit.

2.2.2 [Reserved]

2.2.3 Flow Proportional Sampling

Conduct flow proportional oil sampling or continuous drip oil sampling in accordance with ASTM D4177–95 (Reapproved 2000), ''Standard Practice for Automatic Sampling of Petroleum and Petroleum Products'' (incorporated by reference under §75.6), every day the unit is combusting oil. Extract oil at least once every hour and blend into a composite sample. The sample compositing period may not exceed 7 calendar days (168 hrs). Use the actual sulfur content (and where density data are required, the actual density) from the composite sample to calculate the hourly SO_2 mass emission rates for each operating day represented by the composite sample. Calculate the hourly heat input rates for each operating day represented by the composite sample, using the actual gross calorific value from the composite sample.

2.2.4 Manual Sampling

2.2.4.1 Daily Samples

Representative oil samples may be taken from the storage tank or fuel flow line manually every day that the unit combusts oil according to ASTM ASTM D4057–95 (Reapproved 2000), Standard Practice for Manual Sampling of Petroleum and Petroleum Products (incorporated by reference under §75.6 of this part). Use either the actual daily sulfur content or the highest fuel sulfur content recorded at that unit from the most recent 30 daily samples for the purpose of calculating SO_2 emissions under section 3 of this appendix. Use either the gross calorific value measured from that day's sample or the highest GCV from the previous 30 days' samples to calculate heat input. If oil supplies with different sulfur contents are combusted on the same day, sample the highest sulfur fuel combusted that day.

2.2.4.2 Sampling From a Unit's Storage Tank

Take a manual sample after each addition of oil to the storage tank. Do not blend additional fuel with the sampled fuel prior to combustion. Sample according to the single tank composite sampling procedure or all-levels sampling procedure in ASTM ASTM D4057–95 (Reapproved 2000), Standard Practice for Manual Sampling of Petroleum and Petroleum Products (incorporated by reference under §75.6 of this part). Use the sulfur content and GCV value (and where required, the density) of either the most recent sample or one of the conservative assumed values described in section 2.2.4.3(c) of this appendix to calculate SO_2 mass emission rate. Calculate heat input rate using the gross calorific value from either:

(a) The most recent oil sample taken or

(b) One of the conservative assumed values described in section 2.2.4.3(c) of this appendix. Follow the applicable provisions in section 2.2.4.3(d) of this appendix, regarding the use of assumed values.

2.2.4.3 Sampling From Each Delivery

(a) Alternatively, an oil sample may be taken from—

(1) The shipment tank or container upon receipt of each lot of fuel oil or

(2) The supplier's storage container which holds the lot of fuel oil. (Note: a supplier need only sample the storage container once for sulfur content, GCV and, where required, the density so long as the fuel sulfur content and GCV do not change and no fuel is added to the supplier's storage container.)

(b) For the purpose of this section, a lot is defined as a shipment or delivery (e.g., ship load, barge load, group of trucks, discrete purchase of diesel fuel through a pipeline, etc.) of a single fuel.

(c) Oil sampling may be performed either by the owner or operator of an affected unit, an outside laboratory, or a fuel supplier, provided that samples are representative and that sampling is performed according to either the single tank composite sampling procedure or the all-levels sampling procedure in ASTM ASTM D4057–95 (Reapproved 2000), Standard Practice for Manual Sampling of Petroleum and Petroleum Products (incorporated by reference under §75.6 of this part). Except as otherwise provided in this section, calculate SO_2 mass emission rate using the sulfur content (and where required, the density) from one of the two following conservative assumed values, and calculate heat input using the gross calorific value from one of the assumed values:

(1) The highest value sampled during the previous calendar year (this option is allowed for any consistent fuel which comes from a single source whether or not the fuel is supplied under a contractual agreement) or

(2) The maximum value indicated in the contract with the fuel supplier. Continue to use this assumed contract value unless and until the actual sampled sulfur content, density, or gross calorific value of a delivery exceeds the assumed value.

(d) Continue using the assumed value(s), so long as the sample results do not exceed the assumed value(s). However, if the actual sampled sulfur content, gross calorific value, or density of an oil sample is greater than the assumed value for that parameter, then, consistent with section 2.3.7 of this appendix, begin to use the actual sampled value for sulfur content, gross calorific value, or density of fuel to calculate SO2 mass emission rate or heat input rate. Consider the sampled value to be the new assumed sulfur content, gross calorific value, or density. Continue using this new assumed value to calculate SO2 mass emission rate or heat input rate unless and until: it is superseded by a higher value from an oil sample; or (if applicable) it is superseded by a new contract in which case the new contract value becomes the assumed value at the time the fuel specified under the new contract begins to be combusted in the unit; or (if applicable) both the calendar year in which the sampled value exceeded the assumed value and the subsequent calendar year have elapsed.

2.2.5 For each oil sample that is taken onsite at the affected facility, split and label the sample and maintain a portion (at least 200 cc) of it throughout the calendar year and in all cases for not less than 90 calendar days after the end of the calendar year allowance accounting period. This requirement does not apply to oil samples taken from the fuel supplier's storage container, as described in section 2.2.4.3 of this appendix. Analyze oil samples for percent sulfur content by weight in accordance with ASTM D129–00, Standard Test Method for Sulfur in Petroleum Products (General Bomb Method), ASTM D1552–01, Standard Test Method for Sulfur in Petroleum Products (High-Temperature Method), ASTM D2622–98, Standard Test Method for Sulfur in Petroleum Products by Wavelength Dispersive X-ray Fluorescence Spectrometry, ASTM D4294–98, Standard Test Method for Sulfur in Petroleum and Petroleum Products by Energy-Dispersive X-ray Fluorescence Spectrometry, or ASTM D5453–06, Standard Test Method for Determination of Total Sulfur in Light Hydrocarbons, Spark Ignition Engine Fuel, Diesel Engine Fuel, and Engine Oil by Ultraviolet Fluorescence (all incorporated by reference under §75.6 of this part). Alternatively, the oil samples may be analyzed for percent sulfur by any consensus standard method prescribed for the affected unit under part 60 of this chapter.

2.2.6 Where the flowmeter records volumetric flow rate rather than mass flow rate, analyze oil samples to determine the density or specific gravity of the oil. Determine the density or specific gravity of the oil sample in accordance with ASTM D287–92 (Reapproved 2000), Standard Test Method for API Gravity of Crude Petroleum and Petroleum Products (Hydrometer Method), ASTM D1217–93 (Reapproved 1998), Standard Test Method for Density and Relative Density (Specific Gravity) of Liquids by Bingham Pycnometer, ASTM D1481–93 (Reapproved 1997), Standard Test Method for Density and Relative Density (Specific Gravity) of Viscous Materials by Lipkin Bicapillary Pycnometer, ASTM D1480–93 (Reapproved 1997), Standard Test Method for Density and Relative Density (Specific Gravity) of Viscous Materials by Bingham Pycnometer, ASTM D1298–99, Standard Test Method for Density, Relative Density (Specific Gravity), or API Gravity of Crude Petroleum and Liquid Petroleum Products by Hydrometer Method, or ASTM D4052–96 (Reapproved 2002), Standard Test Method for Density and Relative Density of Liquids by Digital Density Meter (all incorporated by reference under §75.6 of this part). Alternatively, the oil samples may be analyzed for density or specific gravity by any consensus standard method prescribed for the affected unit under part 60 of this chapter.

2.2.7 Analyze oil samples to determine the heat content of the fuel. Determine oil heat content in accordance with ASTM D240–00, Standard Test Method for Heat of Combustion of Liquid Hydrocarbon Fuels by Bomb Calorimeter, ASTM D4809–00, Standard Test Method for Heat of Combustion of Liquid Hydrocarbon Fuels by Bomb Calorimeter (Precision Method), or ASTM D5865–01a, Standard Test Method for Gross Calorific Value of Coal and Coke (all incorporated by reference under §75.6 of this part) or any other procedures listed in section 5.5 of appendix F of this part. Alternatively, the oil samples may be analyzed for heat content by any consensus standard method prescribed for the affected unit under part 60 of this chapter.

2.2.8 Results from the oil sample analysis must be available no later than thirty calendar days after the sample is composited or taken. However, during an audit, the Administrator may require that the results of the analysis be available as soon as practicable, and no later than 5 business days after receipt of a request from the Administrator.

2.3 SO_2 Emissions From Combustion of Gaseous Fuels

(a) Account for the hourly SO_2 mass emissions due to combustion of gaseous fuels for each hour when gaseous fuels are combusted by the unit using the procedures in this section.

(b) The procedures in sections 2.3.1 and 2.3.2 of this appendix, respectively, may be used to determine SO_2 mass emissions from combustion of pipeline natural gas and natural gas, as defined in §72.2 of this chapter. The procedures in section 2.3.3 of this appendix may be used to account for SO_2 mass emissions from any gaseous fuel combusted by a unit. For each type of gaseous fuel, the

appropriate sampling frequency and the sulfur content and GCV values used for calculations of SO_2 mass emission rates are summarized in the following Table D–5.

TABLE D-5. -- GAS SULFUR AND GCV VALUES USED IN CALCULATIONS FOR VARIOUS FUEL TYPES

Parameter	Fuel type and sampling frequency	Value used in calculations (except for missing data hours)
Gas Total Sulfur Content	Pipeline Natural Gas with total sulfur content less than or equal to 0.5 grains/100scf * Sampling is not required if a valid contract or tariff sheet is used to qualify. * If fuel sampling and analysis is used to qualify, sample annually and whenever the fuel supply source changes.	1. If a contract or tariff sheet is used to qualify, use 0.0006 lb/mmBtu 2. If fuel sampling and analysis is used to qualify, use 0.0006 lb/mmBtu, provided that the results of the required annual samples do not exceed 0.5 grains/100 scf of total sulfur. If the results of an annual sample exceed 0.5 grains/100 scf, re-classify the fuel as appropriate and determine the SO_2 emission rate to be used in the calculations, using the applicable procedures in section 2.3.2 or 2.3.3 of this appendix
	Natural Gas with total sulfur content less than or equal to 20.0 grains /100scf * Sampling is not required if a valid contract or tariff sheet is used to qualify. * If fuel sampling and analysis is used to qualify, sample annually and whenever the fuel supply source changes.	Default SO_2 emission rate calculated from Eq. D-1h, using either: 1. The maximum total sulfur content specified in the fuel contract or tariff sheet, if a contract or tariff sheet is used to qualify; or 2. The total sulfur content, based on the most recent fuel sampling and analysis. If multiple samples are taken, the results may be averaged before using Equation D-1h.
	Any gaseous fuel transmitted by pipeline, having a "low sulfur variability", as shown under section 2.3.6 of this appendix. * Either sample daily or, if Eq. D-1h is used to calculate a default SO_2 emission rate, sample annually.	* If daily sampling is performed, use either: 1. Actual value from the daily sample; or 2. Highest value from previous 30 samples. * If the option to use Eq. D-1h is selected, use a default SO_2 emission rate, calculated using the higher of: 1. The 90th percentile value of the total sulfur content, obtained in the 720-hr demonstration under section 2.3.6; or 2. The actual total sulfur content from the most recent annual sample. If multiple samples are taken, the results may be averaged before using Equation D-1h.

Parameter	Fuel type and sampling frequency	Value used in calculations (except for missing data hours)
	Any gaseous fuel transmitted by pipeline, having a maximum total sulfur content ≤ 20 grains/100 scf and "high sulfur variability", as shown under section 2.3.6 of this appendix. * Either sample hourly or, if Eq. D-1h is used to calculate a default SO_2 emission rate, sample annually.	* If hourly sampling is performed, use the actual hourly value * If the option to use Eq. D-1h is selected, use a default SO_2 emission rate, calculated using the higher of: 1. The maximum value of the total sulfur content, obtained in the 720-hr demonstration under section 2.3.6; or 2. The actual total sulfur content from the most recent annual sample. If multiple samples are taken, the results may be averaged before using Equation D-1h.
	Any gaseous fuel transmitted by pipeline, having a maximum total sulfur content > 20 grains/100 scf and "high sulfur variability", as shown under section 2.3.6 of this appendix. * Sample hourly	Actual hourly sulfur content of the gas
	Any gaseous fuel delivered in shipments or lots * Sample each lot or shipment.	1. Actual total sulfur content from most recent shipment; or 2. Highest total sulfur content from previous year's samples, unless a higher value is obtained in a sample[1] ; or 3. Maximum total sulfur content value allowed by contract, unless a higher value is obtained in a sample.[1]
Gas GCV	Pipeline Natural Gas * Sample monthly	1. GCV from most recent monthly sample (with ≥ 48 operating hours in the month); 2. Maximum GCV from contract, unless a higher value is obtained in a monthly sample;[1] or 3. Highest GCV from previous year's samples, unless a higher value is obtained in a monthly sample.[1]
	Natural Gas * Sample monthly	1. GCV from most recent monthly sample (with ≥ 48 operating hours in the month); 2. Maximum GCV from contract[1] or 3. Highest GCV from previous year's samples.[1]
	Any gaseous fuel delivered in shipments or lots * Sample each lot or shipment	1. Actual GCV from most recent shipment or lot; 2. Highest GCV from previous year's samples, unless a higher value is obtained in a sample;[1] or 3. Maximum GCV value allowed by contract, unless a higher value is obtained in a sample.[1]

Parameter	Fuel type and sampling frequency	Value used in calculations (except for missing data hours)
	Any gaseous fuel transmitted by pipeline and having a demonstrated "low GCV variability" using the provisions of section 2.3.5 * Sample monthly	1. GCV from most recent monthly sample (with ≥ 48 operating hours in the month); or 2. Highest GCV from previous year's samples, unless a higher value is obtained in a monthly sample.[1]
	Any gaseous fuel not demonstrated to have a "low GCV variability" under section 2.3.5 * Sample daily or hourly. (Note that the use of an on-line GCV calorimeter or gas chromatograph is allowed).	Actual daily or hourly GCV of the gas.

[1] Assumed sulfur content and GCV values (i.e., contract values or highest values from previous year) may only continue to be used if the sulfur content or GCV of each sample is no greater than the assumed value used to calculate SO_2 emissions or heat input. If a higher sample value is obtained, use the results of that sample analysis as the new assumed value.

2.3.1 Pipeline Natural Gas Combustion

The owner or operator may determine the SO_2 mass emissions from the combustion of a fuel that meets the definition of pipeline natural gas, in §72.2 of this chapter, using the procedures of this section.

2.3.1.1 SO_2 Emission Rate

For a fuel that meets the definition of pipeline natural gas under §72.2 of this chapter, the owner or operator may determine the SO_2 mass emissions using either a default SO_2 emission rate of 0.0006 lb/mmBtu and the procedures of this section, the procedures in section 2.3.2 for natural gas, or the procedures of section 2.3.3 for any gaseous fuel. For each affected unit using the default rate of 0.0006 lb/mmBtu, the owner or operator must document that the fuel combusted is actually pipeline natural gas, using the procedures in section 2.3.1.4 of this appendix.

2.3.1.2 Hourly Heat Input Rate

Calculate hourly heat input rate, in mmBtu/hr, for a unit combusting pipeline natural gas, using the procedures of section 3.4.1 of this appendix. Use the measured fuel flow rate from section 2.1 of this appendix and the gross calorific value from section 2.3.4.1 of this appendix in the calculations.

2.3.1.3 SO_2 Hourly Mass Emission Rate and Hourly Mass Emissions

For pipeline natural gas combustion, calculate the SO2 mass emission rate, in lb/hr, using Equation D–5 in section 3.3.2 of this appendix (when the default SO_2 emission rate is used) or Equation D–4 (if daily or hourly fuel sampling is used). Then, use the calculated SO_2 mass emission rate and the unit operating time to determine the hourly SO_2 mass emissions from pipeline natural gas combustion, in lb, using Equation D–12 in section 3.5.1 of this appendix.

2.3.1.4 Documentation that a Fuel is Pipeline Natural Gas

(a) A fuel may initially qualify as pipeline natural gas, if information is provided in the monitoring plan required under §75.53, demonstrating that the definition of pipeline natural gas in §72.2 of this chapter has been met. The information must demonstrate that the fuel meets either the percent methane or GCV requirement and has a total sulfur content of 0.5 grains/100scf or less. The demonstration must be made using one of the following sources of information:

(1) The gas quality characteristics specified by a purchase contract, tariff sheet, or by a pipeline transportation contract; or

(2) Historical fuel sampling data for the previous 12 months, documenting the total sulfur content of the fuel and the GCV and/or percentage by volume of methane. The results of all sample analyses obtained by or provided to the owner or operator in the previous 12 months shall be used in the demonstration, and each sample result must meet the definition of pipeline natural gas in §72.2 of this chapter, except where the results of at least 100 daily (or more frequent) total sulfur samples are provided by the fuel supplier. In that case you may opt to convert these data to monthly averages and then if, for each month, the average total sulfur content is 0.5 grains/100 scf or less, and if the GCV or percent methane requirement is also met, the fuel qualifies as pipeline natural

gas. Alternatively, the fuel qualifies as pipeline natural gas if ≥98 percent of the 100 (or more) samples have a total sulfur content of 0.5 grains/100 scf or less and if the GCV or percent methane requirement is also met; or

(3) If the requirements of paragraphs (a)(1) and (a)(2) of this section cannot be met, a fuel may initially qualify as pipeline natural gas if at least one representative sample of the fuel is obtained and analyzed for total sulfur content and for either the gross calorific value (GCV) or percent methane, and the results of the sample analysis show that the fuel meets the definition of pipeline natural gas in §72.2 of this chapter. Use the sampling methods specified in sections 2.3.3.1.2 and 2.3.4 of this appendix. The required fuel sample may be obtained and analyzed by the owner or operator, by an independent laboratory, or by the fuel supplier. If multiple samples are taken, each sample must meet the definition of pipeline natural gas in §72.2 of this chapter.

(b) If the results of the fuel sampling under paragraph (a)(2) or (a)(3) of this section show that the fuel does not meet the definition of pipeline natural gas in §72.2 of this chapter, but those results are believed to be anomalous, the owner or operator may document the reasons for believing this in the monitoring plan for the unit, and may immediately perform additional sampling. In such cases, a minimum of three additional samples must be obtained and analyzed, and the results of each sample analysis must meet the definition of pipeline natural gas.

(c) If several affected units are supplied by a common source of gaseous fuel, a single sampling result may be applied to all of the units and it is not necessary to obtain a separate sample for each unit, provided that the composition of the fuel is not altered by blending or mixing it with other gaseous fuel(s) when it is transported from the sampling location to the affected units. For the purposes of this paragraph, the term ''other gaseous fuel(s)'' excludes compounds such as mercaptans when they are added in trace quantities for safety reasons.

(d) If the results of fuel sampling and analysis under paragraph (a)(2), (a)(3), or (b) of this section show that the fuel does not qualify as pipeline natural gas, proceed as follows:

(1) If the fuel still qualifies as natural gas under section 2.3.2.4 of this appendix, re-classify the fuel as natural gas and determine the appropriate default SO_2 emission rate for the fuel, according to section 2.3.2.1.1 of this appendix; or

(2) If the fuel does not qualify either as pipeline natural gas or natural gas, re-classify the fuel as ''other gaseous fuel'' and implement the procedures of section 2.3.3 of this appendix, within 180 days of the end of the quarter in which the disqualifying sample was taken. In addition, the owner or operator shall use Equation D–1h in this appendix to calculate a default SO_2 emission rate for the fuel, based on the results of the sample analysis that exceeded 20 grains/100 scf of total sulfur, and shall use that default emission rate to report SO_2 mass emissions under this part until section 2.3.3 of this appendix has been fully implemented.

(e) If a fuel qualifies as pipeline natural gas based on the specifications in a fuel contract or tariff sheet, no additional, on-going sampling of the fuel's total sulfur content is required, provided that the contract or tariff sheet is current, valid and representative of the fuel combusted in the unit. If the fuel qualifies as pipeline natural gas based on fuel sampling and analysis, on-going sampling of the fuel's sulfur content is required annually and whenever the fuel supply source changes. For the purposes of this paragraph (e), sampling ''annually'' means that at least one sample is taken in each calendar year. If the results of at least 100 daily (or more frequent) total sulfur samples have been provided by the fuel supplier since the last annual assessment of the fuel's sulfur content, the data may be used as follows to satisfy the annual sampling requirement for the current year. If this option is chosen, all of the data provided by the fuel supplier shall be used. First, convert the data to monthly averages. Then, if, for each month, the average total sulfur content is 0.5 grains/100 scf or less, and if the GCV or percent methane requirement is also met, the fuel qualifies as pipeline natural gas. Alternatively, the fuel qualifies as pipeline natural gas if the analysis of the 100 (or more) total sulfur samples since the last annual assessment shows that ≥98 percent of the samples have a total sulfur content of 0.5 grains/100 scf or less and if the GCV or percent methane requirement is also met. The effective date of the annual total sulfur sampling requirement is January 1, 2003.

(f) On-going sampling of the GCV of the pipeline natural gas is required under section 2.3.4.1 of this appendix.

(g) For units that are required to monitor and report NO_X mass emissions and heat input under subpart H of this part, but which are not affected units under the Acid Rain Program, the owner or operator is exempted from the requirements in paragraphs (a) and (e) of this section to document the total sulfur content of the pipeline natural gas.

2.3.2 Natural Gas Combustion

The owner or operator may determine the SO_2 mass emissions from the combustion of a fuel that meets the definition of natural gas, in §72.2 of this chapter, using the procedures of this section.

2.3.2.1 SO_2 Emission Rate

The owner or operator may account for SO_2 emissions either by using a default SO_2 emission rate, as determined under section 2.3.2.1.1 of this appendix, or by daily sampling of the gas sulfur content using the procedures of section 2.3.3 of this appendix. For each affected unit using a default SO_2 emission rate, the owner or operator must provide documentation that the fuel combusted is actually natural gas according to the procedures in section 2.3.2.4 of this appendix.

2.3.2.1.1 In lieu of daily sampling of the sulfur content of the natural gas, the owner or operator may either use the total sulfur content specified in a contract or tariff sheet as the SO_2 default emission rate or may calculate the default SO_2 emission rate based on fuel sampling results, using Equation D–1h. In Equation D–1h, the total sulfur content and GCV values shall be determined in accordance with Table D–5 of this appendix. Round off the calculated SO_2 default emission rate to the nearest 0.0001 lb/mmBtu.

$$ER = \left[\frac{2.0}{7000}\right] \times \left[10^6\right] \times \left[\frac{S_{total}}{GCV}\right] \qquad \text{(Eq. D-1h)}$$

Where:

ER = Default SO_2 emission rate for natural gas combustion, lb/mmBtu.

S_{total} = Total sulfur content of the natural gas, gr/100scf.

GCV = Gross calorific value of the natural gas, Btu/100scf.

7000 = Conversion of grains/100scf to lb/100scf.

2.0 = Ratio of lb SO_2/lb S.

10^6 = Conversion factor (Btu/mmBtu).

2.3.2.1.2 [Reserved]

2.3.2.2 Hourly Heat Input Rate

Calculate hourly heat input rate for natural gas combustion, in mmBtu/hr, using the procedures in section 3.4.1 of this appendix. Use the measured fuel flow rate from section 2.1 of this appendix and the gross calorific value from section 2.3.4.2 of this appendix in the calculations.

2.3.2.3 SO_2 Mass Emission Rate and Hourly Mass Emissions

For natural gas combustion, calculate the SO_2 mass emission rate, in lb/hr, using Equation D–5 in section 3.3.2 of this appendix, when the default SO_2 emission rate is used. Then, use the calculated SO_2 mass emission rate and the unit operating time to determine the hourly SO_2 mass emissions from natural gas combustion, in lb, using Equation D–12 in section 3.5.1 of this appendix.

2.3.2.4 Documentation that a Fuel Is Natural Gas

(a) A fuel may initially qualify as natural gas, if information is provided in the monitoring plan required under §75.53, demonstrating that the definition of natural gas in §72.2 of this chapter has been met. The information must demonstrate that the fuel meets either the percent methane or GCV requirement and has a total sulfur content of 20.0 grains/100 scf or less. This demonstration must be made using one of the following sources of information:

(1) The gas quality characteristics specified by a purchase contract, tariff sheet, or by a transportation contract; or

(2) Historical fuel sampling data for the previous 12 months, documenting the total sulfur content of the fuel and the GCV and/or percentage by volume of methane. The results of all sample analyses obtained by or provided to the owner or operator in the previous 12 months shall be used in the demonstration, and each sample result must meet the definition of natural gas in §72.2 of this chapter; or

(3) If the requirements of paragraphs (a)(1) and (a)(2) of this section cannot be met, a fuel may initially qualify as natural gas if at least one representative sample of the fuel is obtained and analyzed for total sulfur content and for either the gross calorific value (GCV) or percent methane, and the results of the sample analysis show that the fuel meets the definition of natural gas in §72.2 of this chapter. Use the sampling methods specified in sections 2.3.3.1.2 and 2.3.4 of this appendix. The required fuel sample may be obtained and analyzed by the owner or operator, by an independent laboratory, or by the fuel supplier. If multiple samples are taken, each sample must meet the definition of natural gas in §72.2 of this chapter.

(b) If the results of the fuel sampling under paragraph (a)(2) or (a)(3) of this section show that the fuel does not meet the definition of natural gas in §72.2 of this chapter, but those results are believed to be anomalous, the owner or operator may document the reasons for believing this in the monitoring plan for the unit, and may immediately perform additional sampling. In such cases, a minimum of three additional samples must be obtained and analyzed, and the results of each sample analysis must meet the definition of natural gas.

(c) If several affected units are supplied by a common source of gaseous fuel, a single sampling result may be applied to all of the units and it is not necessary to obtain a separate sample for each unit, provided that the composition of the fuel is not altered by blending or mixing it with other gaseous fuel(s) when it is transported from the sampling location to the affected units. For the purposes of this paragraph, the term ''other gaseous fuel(s)'' excludes compounds such as mercaptans when they are added in trace quantities for safety reasons.

(d) If the results of fuel sampling and analysis under paragraph (a)(2), (a)(3), or (b) of this section show that the fuel does not qualify as natural gas, the owner or operator shall re-classify the fuel as ''other gaseous fuel'' and shall implement the procedures of section 2.3.3 of this appendix, within 180 days of the end of the quarter in which the disqualifying sample was taken. In addition, the owner or operator shall use Equation D–1h in this appendix to calculate a default SO_2 emission rate for the fuel, based on the results of the sample analysis that exceeded 20 grains/100 scf of total sulfur, and shall use that default emission rate to report SO_2 mass emissions under this part until section 2.3.3 of this appendix has been fully implemented.

(e) If a fuel qualifies as natural gas based on the specifications in a fuel contract or tariff sheet, no additional, on-going sampling of the fuel's total sulfur content is required, provided that the contract or tariff sheet is current, valid and representative of the fuel combusted in the unit. If the fuel qualifies as natural gas based on fuel sampling and analysis, the owner or operator shall sample the fuel for total sulfur content at least annually and when the fuel supply source changes. For the purposes of this paragraph, (e), sampling ''annually'' means that at least one sample is taken in each calendar year. The effective date of the annual total sulfur sampling requirement is January 1, 2003.

(f) On-going sampling of the GCV of the natural gas is required under section 2.3.4.2 of this appendix.

(g) For units that are required to monitor and report NO_X mass emissions and heat input under subpart H of this part, but which are not affected units under the Acid Rain Program, the owner or operator is exempted from the requirements in paragraphs (a) and (e) of this section to document the total sulfur content of the natural gas.

2.3.3 SO_2 Mass Emissions From Any Gaseous Fuel

The owner or operator of a unit may determine SO_2 mass emissions using this section for any gaseous fuel (including fuels such as refinery gas, landfill gas, digester gas, coke oven gas, blast furnace gas, coal-derived gas, producer gas or any other gas which may have a variable sulfur content).

2.3.3.1 Sulfur Content Determination

2.3.3.1.1 Analyze the total sulfur content of the gaseous fuel in grains/100 scf, at the frequency specified in Table D–5 of this appendix. That is: for fuel delivered in discrete shipments or lots, sample each shipment or lot. For fuel transmitted by pipeline, sample hourly unless a demonstration is provided under section 2.3.6 of this appendix showing that the gaseous fuel qualifies for less frequent (*i.e.,* daily or annual) sampling. If daily sampling is required, determine the sulfur content using either manual sampling or a gas chromatograph. If hourly sampling is required, determine the sulfur content using a gas chromatograph. For units that are required to monitor and report NO_X mass emissions and heat input under subpart H of this part, but which are not affected units under the Acid Rain Program, the owner or operator is exempted from the requirements of this section to document the total sulfur content of the gaseous fuel.

2.3.3.1.2 Use one of the following methods when using manual sampling (as applicable to the type of gas combusted) to determine the sulfur content of the fuel: ASTM D1072–06, Standard Test Method for Total Sulfur in Fuel Gases by Combustion and Barium Chloride Titration, ASTM D4468–85 (Reapproved 2006), Standard Test Method for Total Sulfur in Gaseous Fuels by Hydrogenolysis and Rateometric Colorimetry, ASTM D5504–01, Standard Test Method for Determination of Sulfur Compounds in Natural Gas and Gaseous Fuels by Gas Chromatography and Chemiluminescence, ASTM D6667–04, Standard Test Method for Determination of Total Volatile Sulfur in Gaseous Hydrocarbons and Liquefied Petroleum Gases by Ultraviolet Fluorescence, or ASTM D3246–96, Standard Test Method for Sulfur in Petroleum Gas by Oxidative Microcoulometry, (all incorporated by reference under §75.6 of this part). Alternatively, the gas samples may be analyzed for percent sulfur by any consensus standard method prescribed for the affected unit under part 60 of this chapter.

2.3.3.1.3 The sampling and analysis of daily manual samples may be performed by the owner or operator, an outside laboratory, or the gas supplier. If hourly sampling with a gas chromatograph is required, or a source chooses to use an online gas chromatograph to determine daily fuel sulfur content, the owner or operator shall develop and implement a program to quality assure the data from the gas chromatograph, in accordance with the manufacturer's recommended procedures. The quality assurance procedures shall be kept on-site, in a form suitable for inspection.

2.3.3.1.4 Results of all sample analyses must be available no later than thirty calendar days after the sample is taken.

2.3.3.2 SO_2 Mass Emission Rate

Calculate the SO_2 mass emission rate for the gaseous fuel, in lb/hr, using Equation D–4 or D–5 (as applicable) in section 3.3.1 of this appendix. Equation D–5 may only be used if a demonstration is performed under section 2.3.6 of this appendix, showing that the fuel qualifies to use a default SO_2 emission rate to account for SO_2 mass emissions under this part. Use the appropriate sulfur content or default SO_2 emission rate in Equation D–4 or D–5, as specified in Table D–5 of this appendix. If the fuel qualifies to use Equation D–5, the default SO_2 emission rate shall be calculated using Equation D–1h in section 2.3.2.1.1 of this appendix, replacing the words ''natural gas'' in the equation nomenclature with the words, ''gaseous fuel''. In all cases, for reporting purposes, apply the results of the required periodic total sulfur samples in accordance with the provisions of section 2.3.7 of this appendix.

2.3.3.3 Hourly Heat Input Rate

Calculate the hourly heat input rate for combustion of the gaseous fuel, using the provisions in section 3.4.1 of this appendix. Use the measured fuel flow rate from section 2.1 of this appendix and the gross calorific value from section 2.3.4.3 of this appendix in the calculations.

2.3.4 Gross Calorific Values for Gaseous Fuels

Determine the GCV of each gaseous fuel at the frequency specified in this section, using one of the following methods: ASTM D1826–94 (Reapproved 1998), ASTM D3588–98, ASTM D4891–89 (Reapproved 2006), GPA Standard 2172–96, Calculation of Gross Heating Value, Relative Density and Compressibility Factor for Natural Gas Mixtures from Compositional Analysis, or GPA Standard 2261–00, Analysis for Natural Gas and Similar Gaseous Mixtures by Gas Chromatography (all incorporated by reference under §75.6 of this part). Use the appropriate GCV value, as specified in section 2.3.4.1, 2.3.4.2, or 2.3.4.3 of this appendix, in the calculation of unit hourly heat input rates. Alternatively, the gas samples may be analyzed for heat content by any consensus standard method prescribed for the affected unit under part 60 of this chapter.

2.3.4.1 GCV of Pipeline Natural Gas

Determine the GCV of fuel that is pipeline natural gas, as defined in §72.2 of this chapter, at least once per calendar month. For GCV used in calculations use the specifications in Table D–5: either the value from the most recent monthly sample, the highest value specified in a contract or tariff sheet, or the highest value from the previous year. The fuel GCV value from the most recent monthly sample shall be used for any month in which that value is higher than a contract limit. If a unit combusts pipeline natural gas for less than 48 hours during a calendar month, the sampling and analysis requirement for GCV is waived for that calendar month. The preceding waiver is limited by the condition that at least one analysis for GCV must be performed for each quarter the unit operates for any amount of time. If multiple GCV samples are taken and analyzed in a particular month, the GCV values from all samples shall be averaged arithmetically to obtain the monthly GCV. Then, apply the monthly average GCV value as described in paragraph (c) in section 2.3.7 of this appendix.

2.3.4.2 GCV of Natural Gas

Determine the GCV of fuel that is natural gas, as defined in §72.2 of this chapter, on a monthly basis, in the same manner as described for pipeline natural gas in section 2.3.4.1 of this appendix.

2.3.4.3 GCV of Other Gaseous Fuels

For gaseous fuels other than natural gas or pipeline natural gas, determine the GCV as specified in section 2.3.4.3.1, 2.3.4.3.2 or 2.3.4.3.3, as applicable. For reporting purposes, apply the results of the required periodic GCV samples in accordance with the provisions of section 2.3.7 of this appendix.

2.3.4.3.1 For a gaseous fuel that is delivered in discrete shipments or lots, determine the GCV for each shipment or lot. The determination may be made by sampling each delivery or by sampling the supply tank after each delivery. For sampling of each delivery, use the highest GCV in the previous year's samples. For sampling from the tank after each delivery, use either the most recent GCV sample, the maximum GCV specified in the fuel contract or tariff sheet, or the highest GCV from the previous year's samples.

2.3.4.3.2 For any gaseous fuel that does not qualify as pipeline natural gas or natural gas, which is not delivered in shipments or lots, and for which the owner or operator performs the 720 hour test under section 2.3.5 of this appendix, if the results of the test demonstrate that the gaseous fuel has a low GCV variability, determine the GCV at least monthly (as described in section 2.3.4.1 of this appendix). In calculations of hourly heat input for a unit, use either the most recent monthly sample, the maximum GCV specified in the fuel contract or tariff sheet, or the highest fuel GCV from the previous year's samples.

2.3.4.3.3 For any other gaseous fuel, determine the GCV at least daily and use the actual fuel GCV in calculations of unit hourly

heat input. If an online gas chromatograph or on-line calorimeter is used to determine fuel GCV each day, the owner or operator shall develop and implement a program to quality assure the data from the gas chromatograph or on-line calorimeter, in accordance with the manufacturer's recommended procedures. The quality assurance procedures shall be kept on-site, in a form suitable for inspection.

2.3.5 Demonstration of Fuel GCV Variability

(a) This optional demonstration may be made for any fuel which does not qualify as pipeline natural gas or natural gas, and is not delivered only in shipments or lots. The demonstration data may be used to show that monthly sampling of the GCV of the gaseous fuel or blend is sufficient, in lieu of daily GCV sampling.

(b) To make this demonstration, proceed as follows. Provide a minimum of 720 hours of data, indicating the GCV of the gaseous fuel or blend (in Btu/100 scf). The demonstration data shall be obtained using either: hourly sampling and analysis using the methods in section 2.3.4 to determine GCV of the fuel; an on-line gas chromatograph capable of determining fuel GCV on an hourly basis; or an on-line calorimeter. For gaseous fuel produced by a variable process, the data shall be representative of and include all process operating conditions including seasonal and yearly variations in process which may affect fuel GCV.

(c) The data shall be reduced to hourly averages. The mean GCV value and the standard deviation from the mean shall be calculated from the hourly averages. Specifically, the gaseous fuel is considered to have a low GCV variability, and monthly gas sampling for GCV may be used, if the mean value of the GCV multiplied by 1.075 is greater than the sum of the mean value and one standard deviation. If the gaseous fuel or blend does not meet this requirement, then daily fuel sampling and analysis for GCV, using manual sampling, a gas chromatograph or an on-line calorimeter is required.

2.3.6 Demonstration of Fuel Sulfur Variability

(a) This demonstration may be made for any fuel which does not qualify as pipeline natural gas or natural gas, and is not delivered only in shipments or lots. The results of the demonstration may be used to show that daily sampling for sulfur in the fuel is sufficient, rather than hourly sampling. The procedures in this section may also be used to demonstrate that a particular gaseous fuel qualifies to use a default SO_2 emission rate (calculated using Equation D–1h in section 2.3.2.1.1 of this appendix) for the purpose of reporting hourly SO_2 mass emissions under this part. To make this demonstration, proceed as follows. Provide a minimum of 720 hours of data, indicating the total sulfur content of the gaseous fuel (in gr/100 scf). The demonstration data shall be obtained using either manual hourly sampling or an on-line gas chromatograph (GC) capable of determining fuel total sulfur content on an hourly basis. For gaseous fuel produced by a variable process, the data shall be representative of all process operating conditions including seasonal or annual variations which may affect fuel sulfur content.

(b) If the data are collected with an on-line GC, reduce the data to hourly average values of the total sulfur content of the fuel. If manual hourly sampling is used, the results of each hourly sample analysis shall be the total sulfur value for that hour. Express all hourly average values of total sulfur content in units of grains/100 scf. Use all of the hourly average values of total sulfur content in grains/100 scf to calculate the mean value and the standard deviation. Also determine the 90th percentile and maximum hourly values of the total sulfur content for the data set. If the standard deviation of the hourly values from the mean does not exceed 5.0 grains/100 scf, the fuel has a low sulfur variability. If the standard deviation exceeds 5.0 grains/100 scf, the fuel has a high sulfur variability. Based on the results of this determination, establish the required sampling frequency and SO_2 mass emissions methodology for the gaseous fuel, as follows:

(1) If the gaseous fuel has a low sulfur variability (irrespective of the total sulfur content), the owner or operator may either perform daily sampling of the fuel's total sulfur content using manual sampling or a GC, or may report hourly SO_2 mass emissions data using a default SO_2 emission rate calculated by substituting the 90th percentile value of the total sulfur content in Equation D–1h.

(2) If the gaseous fuel has a high sulfur variability, but the maximum hourly value of the total sulfur content does not exceed 20 grains/100 scf, the owner or operator may either perform hourly sampling of the fuel's total sulfur content using an on-line GC, or may report hourly SO_2 mass emissions data using a default SO_2 emission rate calculated by substituting the maximum value of the total sulfur content in Equation D–1h.

(3) If the gaseous fuel has a high sulfur variability and the maximum hourly value of the total sulfur content exceeds 20 grains/100 scf, the owner or operator shall perform hourly sampling of the fuel's total sulfur content, using an on-line GC.

(4) Any gaseous fuel under paragraph (b)(1) or (b)(2) of this section, for which the owner or operator elects to use a default SO_2 emission rate for reporting purposes is subject to the annual total sulfur sampling requirement under section 2.3.2.4(e) of this appendix.

2.3.7 Application of Fuel Sampling Results

For reporting purposes, apply the results of the required periodic fuel samples described in Tables D–4 and D–5 of this appendix as follows. Use Equation D–1h to recalculate the SO_2 emission rate, as necessary.

(a) For daily samples of total sulfur content or GCV:

(1) If the actual value is to be used in the calculations, apply the results of each daily sample to all hours in the day on which the sample is taken; or

(2) If the highest value in the previous 30 daily samples is to be used in the calculations, apply that value to all hours in the current day. If, for a particular unit, fewer than 30 daily samples have been collected, use the highest value from all available samples until 30 days of historical sampling results have been obtained.

(b) For annual samples of total sulfur content:

(1) For pipeline natural gas, use the results of annual sample analyses in the calculations only if the results exceed 0.5 grains/100 scf. In that case, if the fuel still qualifies as natural gas, follow the procedures in paragraph (b)(2) of this section. If the fuel does not qualify as natural gas, the owner or operator shall implement the procedures in section 2.3.3 of this appendix, in the time frame specified in sections 2.3.1.4(d) and 2.3.2.4(d) of this appendix;

(2) For natural gas, if only one sample is taken, apply the results beginning at the date on which the sample was taken. If multiple samples are taken and averaged, apply the results beginning at the date on which the last sample used in the annual assessment was taken;

(3) For other gaseous fuels with an annual sampling requirement under section 2.3.6(b)(4) of this appendix, use the sample results in the calculations only if the results exceed the 90th percentile value or maximum value (as applicable) from the 720-hour demonstration of fuel sulfur content and variability under section 2.3.6 of this appendix.

(c) For monthly samples of the fuel GCV:

(1) If the actual monthly value is to be used in the calculations and only one sample is taken, apply the results starting from the date on which the sample was taken. If multiple samples are taken and averaged, apply the monthly average GCV value to the entire month; or

(2) If an assumed value (contract maximum or highest value from previous year's samples) is to be used in the calculations, apply the assumed value to all hours in each month of the quarter unless a higher value is obtained in a monthly GCV sample (or, if multiple samples are taken and averaged, if the monthly average exceeds the assumed value). In that case, if only one monthly sample is taken, use the sampled value, starting from the date on which the sample was taken. If multiple samples are taken and averaged, use the average value for the entire month in which the assumed value was exceeded. Consider the sample (or, if applicable, monthly average) results to be the new assumed value. Continue using the new assumed value unless and until one of the following occurs (as applicable to the reporting option selected): The assumed value is superseded by a higher value from a subsequent monthly sample (or by a higher monthly average); or the assumed value is superseded by a new contract in which case the new contract value becomes the assumed value at the time the fuel specified under the new contract begins to be combusted in the unit; or both the calendar year in which the new sampled value (or monthly average) exceeded the assumed value and the subsequent calendar year have elapsed.

(d) For samples of gaseous fuel delivered in shipments or lots:

(1) If the actual value for the most recent shipment is to be used in the calculations, apply the results of the most recent sample, from the date on which the sample was taken until the date on which the next sample is taken; or

(2) If an assumed value (contract maximum or highest value from previous year's samples) is to be used in the calculations, apply the assumed value unless a higher value is obtained in a sample of a shipment. In that case, use the sampled value, starting from the date on which the sample was taken. Consider the sample results to be the new assumed value. Continue using the new assumed value unless and until: it is superseded by a higher value from a sample of a subsequent shipment; or (if applicable) it is superseded by a new contract in which case the new contract value becomes the assumed value at the time the fuel specified under the new contract begins to be combusted in the unit; or (if applicable) both the calendar year in which the sampled value exceeded the assumed value and the subsequent calendar year have elapsed.

(e) When the owner or operator elects to use assumed values in the calculations, the results of periodic samples of sulfur content and GCV which show that the assumed value has not been exceeded need not be reported. Keep these sample results on file, in a format suitable for inspection.

(f) Notwithstanding the requirements of paragraphs (b) through (d) of this section, in cases where the sample results are provided to the owner or operator by the supplier of the fuel, the owner or operator shall begin using the sampling results on the date of receipt of those results, rather than on the date that the sample was taken.

2.4 Missing Data Procedures.

When data from the procedures of this part are not available, provide substitute data using the following procedures.

2.4.1 Missing Data for Oil and Gas Samples

When fuel sulfur content, gross calorific value or, when necessary, density data are missing or invalid for an oil or gas sample taken according to the procedures in section 2.2.3, 2.2.4.1, 2.2.4.2, 2.2.4.3, 2.2.5, 2.2.6, 2.2.7, 2.3.3.1.2, or 2.3.4 of this appendix, then substitute the maximum potential sulfur content, density, or gross calorific value of that fuel from Table D–6 of this appendix. Except for the annual samples of fuel sulfur content required under sections 2.3.1.4(e), 2.3.2.4(e) and 2.3.6(b)(5) of this appendix, the missing data values in Table D–6 shall be reported whenever the results of a required sample of sulfur content, GCV or density is missing or invalid in the current calendar year, irrespective of which reporting option is selected (i.e., actual value, contract value or highest value from the previous year). For the annual samples of fuel sulfur content required under sections 2.3.1.4(e), 2.3.2.4(e) and 2.3.6(b)(5) of this appendix, if a valid annual sample has not been obtained by the end of a particular calendar year, the appropriate missing data value in Table D–6 shall be reported, beginning with the first unit operating hour in the next calendar year. The substitute data value(s) shall be used until the next valid sample for the missing parameter(s) is obtained. Note that only actual sample results shall be used to determine the "highest value from the previous year" when that reporting option is used; missing data values shall not be used in the determination.

TABLE D-6. -- MISSING DATA SUBSTITUTION PROCEDURES FOR SULFUR, DENSITY, AND GROSS CALORIFIC VALUE DATA

Parameter	Missing data substitution maximum potential value
Oil Sulfur Content	3.5 percent for residual oil, or 1.0 percent for diesel fuel.
Oil Density	8.5 lb/gal for residual oil, or 7.4 lb/gal for diesel fuel.
Oil GCV	19,500 Btu/lb for residual oil, or 20,000 Btu/lb for diesel fuel.
Gas Total Sulfur Content	1. For pipeline natural gas, where annual sampling is required, substitute 0.002 lb/mmBtu for each hour of the missing data period. 2. For natural gas (or other gaseous fuel that qualifies to use a default SO_2 emission rate under section 2.3.6 of this appendix), where annual sampling is required, substitute 1.5 times the default SO_2 emission rate in use at the time of the missing data period. 3. For any gaseous fuel sampled daily, 1.5 times the highest total sulfur content value from the previous 30 days on which valid samples were obtained. 4. For any gaseous fuel sampled hourly, the highest total sulfur content value from the previous 720 hourly samples.
Gas GCV/Heat Content	110,000 Btu/100 scf for pipeline natural gas, natural gas or landfill gas. 150,000 Btu/100 scf for butane or refinery gas. 210,000 Btu/100 scf for propane or any other gaseous fuel.

2.4.2 Missing Data Procedures for Fuel Flow Rate

Whenever data are missing from any primary fuel flowmeter system (as defined in §72.2 of this chapter) and there is no backup system available to record the fuel flow rate, use the procedures in sections 2.4.2.2 and 2.4.2.3 of this appendix to account for the flow rate of fuel combusted at the unit for each hour during the missing data period. Alternatively, for a fuel flowmeter system used to measure the fuel combusted by a

peaking unit, the simplified fuel flow missing data procedure in section 2.4.2.1 of this appendix may be used. Before using the procedures in sections 2.4.2.2 and 2.4.2.3 of this appendix, establish load ranges for the unit using the procedures of section 2 in appendix C to this part, except for units that do not produce electrical output (i.e., megawatts) or thermal output (e.g., klb of steam per hour). The owner or operator of a unit that does not produce electrical or thermal output shall either perform missing data substitution without segregating the fuel flow rate data into bins, or may petition the Administrator under §75.66 for permission to segregate the data into operational bins. When load ranges are used for fuel flow rate missing data purposes, separate, fuel-specific databases shall be created and maintained. A database shall be kept for each type of fuel combusted in the unit, for the hours in which the fuel is combusted alone in the unit. An additional database shall be kept for each type of fuel, for the hours in which it is co-fired with any other type(s) of fuel(s).

2.4.2.1 Simplified Fuel Flow Rate Missing Data Procedure for Peaking Units

If no fuel flow rate data are available for a fuel flowmeter system installed on a peaking unit (as defined in §72.2 of this chapter), then substitute for each hour of missing data using the maximum potential fuel flow rate. The maximum potential fuel flow rate is the lesser of the following:

(a) The maximum fuel flow rate the unit is capable of combusting or

(b) The maximum flow rate that the fuel flowmeter can measure (i.e., the upper range value of the flowmeter).

2.4.2.2 Standard Missing Data Procedures—Single Fuel Hours

For missing data periods that occur when only one type of fuel is being combusted, provide substitute data for each hour in the missing data period as follows.

2.4.2.2.1 If load-based missing data procedures are used, substitute the arithmetic average of the hourly fuel flow rate(s) measured and recorded by a certified fuel flowmeter system at the corresponding operating unit load range during the previous 720 operating hours in which the unit combusted only that same fuel. If no fuel flow rate data are available at the corresponding load range, use data from the next higher load range, if such data are available. If no quality-assured fuel flow rate data are available at either the corresponding load range or a higher load range, substitute the maximum potential fuel flow rate (as defined in section 2.4.2.1 of this appendix) for each hour of the missing data period.

2.4.2.2.2 For units that do not produce electrical or thermal output and therefore cannot use load-based missing data procedures, provide substitute data for each hour of the missing data period as follows. Substitute the arithmetic average of the hourly fuel flow rates measured and recorded by a certified fuel flowmeter system during the previous 720 operating hours in which the unit combusted only that same fuel. If no quality-assured fuel flow rate data are available, substitute the maximum potential fuel flow rate (as defined in section 2.4.2.1 of this appendix) for each hour of the missing data period.

2.4.2.3 Standard Missing Data Procedures—Multiple Fuel Hours

For missing data periods that occur when two or more different types of fuel are being co-fired, provide substitute fuel flow rate data for each hour of the missing data period as follows.

2.4.2.3.1 If load-based missing data procedures are used, substitute the maximum hourly fuel flow rate measured and recorded by a certified fuel flowmeter system at the corresponding load range during the previous 720 operating hours when the fuel for which the flow rate data are missing was co-fired with any other type of fuel. If no such quality-assured fuel flow rate data are available at the corresponding load range, use data from the next higher load range (if available). If no quality-assured fuel flow rate data are available for co-fired hours, either at the corresponding load range or a higher load range, substitute the maximum potential fuel flow rate (as defined in section 2.4.2.1 of this appendix) for each hour of the missing data period.

2.4.2.3.2 For units that do not produce electrical or thermal output and therefore cannot use load-based missing data procedures, provide substitute fuel flow rate data for each hour of the missing data period as follows. Substitute the maximum hourly fuel flow rate measured and recorded by a certified fuel flowmeter system during the previous 720 operating hours in which the fuel for which the flow rate data are missing was co-fired with any other type of fuel. If no quality-assured fuel flow rate data for co-fired hours are available, substitute the maximum potential fuel flow rate (as defined in section 2.4.2.1 of this appendix) for each hour of the missing data period.

2.4.2.3.3 If, during an hour in which different types of fuel are co-fired, quality-assured fuel flow rate data are missing for two or more of the fuels being combusted, apply the procedures in section 2.4.2.3.1 or 2.4.2.3.2 of this appendix (as applicable) separately for each type of fuel.

2.4.2.3.4 If the missing data substitution required in section 2.4.2.3.1 or 2.4.2.3.2 causes the reported hourly heat input rate based on the combined fuel usage to exceed the maximum rated hourly heat input of the unit,

adjust the substitute fuel flow rate value(s) so that the reported heat input rate equals the unit's maximum rated hourly heat input. Manual entry of the adjusted substitute data values is permitted.

2.4.3. In any case where the missing data provisions of this section require substitution of data measured and recorded more than three years (26,280 clock hours) prior to the date and time of the missing data period, use three years (26,280 clock hours) in place of the prescribed lookback period. In addition, for a new or newly-affected unit, until 720 hours of quality-assured fuel flowmeter data are available for the lookback periods described in sections 2.4.2.2 and 2.4.2.3 of this appendix, use all of the available fuel flowmeter data to determine the appropriate substitute data values.

3. CALCULATIONS

Calculate hourly SO_2 mass emission rate from combustion of oil fuel using the procedures in section 3.1 of this appendix. Calculate hourly SO_2 mass emission rate from combustion of gaseous fuel using the procedures in section 3.3 of this appendix. (Note: the SO_2 mass emission rates in sections 3.1 and 3.3 are calculated such that the rate, when multiplied by unit operating time, yields the hourly SO_2 mass emissions for a particular fuel for the unit.) Calculate hourly heat input rate for both oil and gaseous fuels using the procedures in section 3.4 of this appendix. Calculate total SO_2 mass emissions and heat input for each hour, each quarter and the year to date using the procedures under section 3.5 of this appendix. Where an oil flowmeter records volumetric flow rate, use the calculation procedures in section 3.2 of this appendix to calculate the mass flow rate of oil.

3.1 SO_2 Mass Emission Rate Calculation for Oil

3.1.1 Use Equation D–2 to calculate SO_2 mass emission rate per hour (lb/hr):

$$SO2_{\text{rate-oil}} = 2.0 \times OIL_{\text{rate}} \times \frac{\%S_{\text{oil}}}{100.0} \qquad \text{(Eq. D-2)}$$

Where:

$SO_{2\text{rate-oil}}$ = Hourly mass emission rate of SO_2 emitted from combustion of oil, lb/hr.

OIL_{rate} = Mass rate of oil consumed per hr during combustion, lb/hr.

$\%S_{\text{oil}}$ = Percentage of sulfur by weight in the oil.

2.0 = Ratio of lb SO_2/lb S.

3.1.2 Record the SO_2 mass emission rate from oil for each hour that oil is combusted.

3.2 Mass Flow Rate Calculation for Volumetric Oil Flowmeters

3.2.1 Where the oil flowmeter records volumetric flow rate rather than mass flow rate, calculate and record the oil mass flow rate for each hourly period using hourly oil flow rate measurements and the density or specific gravity of the oil sample.

3.2.2 Convert density, specific gravity, or API gravity of the oil sample to density of the oil sample at the sampling location's temperature using ASTM D1250–07, Standard Guide for Use of the Petroleum Measurement Tables (incorporated by reference under (§ 75.6 of this part).

3.2.3 Where density of the oil is determined by the applicable ASTM procedures from section 2.2.6 of this appendix, use Equation D–3 to calculate the rate of the mass of oil consumed (in lb/hr):

$$OIL_{\text{rate}} = V_{\text{oil-rate}} \times D_{\text{oil}} \qquad \text{(Eq. D-3)}$$

Where:

OIL_{rate} = Mass rate of oil consumed per hr, lb/hr.

$V_{\text{oil-rate}}$ = Volume rate of oil consumed per hr, measured in scf/hr, gal/hr, barrels/hr, or m^3/hr.

D_{oil} = Density of oil, measured in lb/scf, lb/gal, lb/barrel, or lb/m^3.

3.3 SO_2 Mass Emission Rate Calculation for Gaseous Fuels

3.3.1 Use Equation D–4 to calculate the SO_2 mass emission rate when using the optional gas sampling and analysis procedures in sections 2.3.1 and 2.3.2 of this appendix, or the required gas sampling and analysis procedures in section 2.3.3 of this appendix. Total sulfur content of a fuel must be determined using the procedures of 2.3.3.1.2 of this appendix:

$$SO_{2_{\text{rate-gas}}} = \left(\frac{2.0}{7000}\right) \times GAS_{\text{rate}} \times S_{\text{gas}} \qquad \text{(Eq. D-4)}$$

Where:

SO2rate-gas = Hourly mass rate of SO_2 emitted due to combustion of gaseous fuel, lb/hr.

GASrate = Hourly metered flow rate of gaseous fuel combusted, 100 scf/hr.

Sgas = Sulfur content of gaseous fuel, in grain/100 scf.

2.0 = Ratio of lb SO_2/lb S.

7000 = Conversion of grains/100 scf to lb/100 scf.

3.3.2 Use Equation D–5 to calculate the SO_2 mass emission rate when using a default emission rate from section 2.3.1.1 or 2.3.2.1.1 of this appendix:

$$SO2_{rate} = ER \times HI_{rate} \qquad \text{(Eq. D-5)}$$

where:

SO_2rate = Hourly mass emission rate of SO_2 from combustion of a gaseous fuel, lb/hr.

ER = SO_2 emission rate from section 2.3.1.1 or 2.3.2.1.1, of this appendix, lb/mmBtu.

HI_{rate} = Hourly heat input rate of a gaseous fuel, calculated using procedures in section 3.4.1 of this appendix, in mmBtu/hr.

3.3.3 Record the SO_2 mass emission rate for each hour when the unit combusts a gaseous fuel.

3.4 Calculation of Heat Input Rate

3.4.1 Heat Input Rate for Gaseous Fuels

(a) Determine total hourly gas flow or average hourly gas flow rate with a fuel flowmeter in accordance with the requirements of section 2.1 of this appendix and the fuel GCV in accordance with the requirements of section 2.3.4 of this appendix. If necessary perform the 720-hour test under section 2.3.5 to determine the appropriate fuel GCV sampling frequency.

(b) Then, use Equation D–6 to calculate heat input rate from gaseous fuels for each hour.

$$HI_{rate\text{-}gas} = \frac{GAS_{rate} \times GCV_{gas}}{10^6} \qquad \text{(Eq. D-6)}$$

Where:

$HI_{rate\text{-}gas}$ = Hourly heat input rate from combustion of the gaseous fuel, mmBtu/hr.

GAS_{rate} = Average volumetric flow rate of fuel, for the portion of the hour in which the unit operated, 100 scf/hr.

GCV_{gas} = Gross calorific value of gaseous fuel, Btu/100 scf.

10^6 = Conversion of Btu to mmBtu.

(c) Note that when fuel flow is measured on an hourly totalized basis (e.g. a fuel flowmeter reports totalized fuel flow for each hour), before Equation D–6 can be used, the total hourly fuel usage must be converted from units of 100 scf to units of 100 scf/hr using Equation D–7:

$$GAS_{rate} = \frac{GAS_{unit}}{t} \qquad \text{(Eq. D-7)}$$

Where:

GAS_{rate} = Average volumetric flow rate of fuel for the portion of the hour in which the unit operated, 100 scf/hr.

GAS_{unit} = Total fuel combusted during the hour, 100 scf.

t = Unit operating time, hour or fraction of an hour (in equal increments that can range from one hundredth to one quarter of an hour, at the option of the owner or operator).

3.4.2 Heat Input Rate From the Combustion of Oil

(a) Determine total hourly oil flow or average hourly oil flow rate with a fuel flowmeter, in accordance with the requirements of section 2.1 of this appendix. Determine oil GCV according to the requirements of section 2.2 of this appendix.

Then, use Equation D–8 to calculate hourly heat input rate from oil for each hour:

$$HI_{rate\text{-}oil} = OIL_{rate} \frac{GCV_{oil}}{10^6} \qquad \text{(Eq. D-8)}$$

Where:

$HI_{rate\text{-}oil}$ = Hourly heat input rate from combustion of oil, mmBtu/hr.

OIL_{rate} = Mass rate of oil consumed per hour, as determined using procedures in section 3.2.3 of this appendix, in lb/hr, tons/hr, or kg/hr.

GCV_{oil} = Gross calorific value of oil, Btu/lb, Btu/ton, or Btu/kg.

10^6 = Conversion of Btu to mmBtu.

(b) Note that when fuel flow is measured on an hourly totalized basis (e.g., a fuel flowmeter reports totalized fuel flow for each hour), before equation D–8 can be used, the total hourly fuel usage must be converted from units of lb to units of lb/hr, using equation D–9:

$$OIL_{rate} = \frac{OIL_{unit}}{t} \qquad \text{(Eq. D-9)}$$

Where:

OIL_{rate} = Average fuel flow rate for the portion of the hour which the unit operated in lb/hr.

OIL_{unit} = Total fuel combusted during the hour, lb.

t = Unit operating time, hour or fraction of an hour (in equal increments that can range from one hundredth to one quarter of an hour, at the option of the owner or operator).

(c) For affected units that are not subject to an Acid Rain emissions limitation, but are regulated under a State or federal NO_X mass emissions reduction program that adopts the requirements of subpart H of this part, the following alternative method may be used to determine the heat input rate from oil combustion, when the oil flowmeter measures the flow rate of oil volumetrically. In lieu of measuring the oil density and converting the volumetric oil flow rate to a mass flow rate, Equation D–8 may be applied on a volumetric basis. If this option is selected, express the terms OIL_{rate} and GCV_{oil} in Equation D–8 in units of volume rather than mass. For example, the units of OIL_{rate} may be gal/hr and the units of GCV_{oil} may be Btu/gal.

3.4.3 Apportioning Heat Input Rate to Multiple Units

(a) Use the procedure in this section to apportion hourly heat input rate to two or more units using a single fuel flowmeter which supplies fuel to the units. The designated representative may also petition the Administrator under §75.66 to use this apportionment procedure to calculate SO_2 and CO_2 mass emissions.

(b) Determine total hourly fuel flow or flow rate through the fuel flowmeter supplying gas or oil fuel to the units. Convert fuel flow rates to units of 100 scf for gaseous fuels or to lb for oil, using the procedures of this appendix. Apportion the fuel to each unit separately based on hourly output of the unit in MW_e or 1000 lb of steam/hr (klb/hr) using Equation F–21a or F–21b in appendix F to this part, as applicable:

Equation D–10 [Reserved]

Equation D–11 [Reserved]

(c) Use the total apportioned fuel flow calculated from Equation F–21a or F–21b to calculate the hourly unit heat input rate, using Equations D–6 and D–7 (for gas) or Equations D–8 and D–9 (for oil).

3.5 Conversion of Hourly Rates to Hourly, Quarterly, and Year-to-Date Totals

3.5.1 Hourly SO_2 Mass Emissions from the Combustion of all Fuels. Determine the total mass emissions for each hour from the combustion of all fuels using Equation D–12 (On and after January 1, 2009, determine the total mass emission rate (in lbs/hr) for each hour from the combustion of all fuels by dividing Equation D–12 by the actual unit operating time for the hour):

$$M_{SO_2-hr} = \sum_{all-fuels} SO_{2_{rate-I}} t_i \qquad \text{(Eq. D-12)}$$

Where:

MSO_2-hr = Total mass of SO_2 emissions from all fuels combusted during the hour, lb.

SO_2 rate−I = SO_2 mass emission rate for each type of gas or oil fuel combusted during the hour, lb/hr.

ti = Time each gas or oil fuel was combusted for the hour (fuel usage time), fraction of an hour (in equal increments that can range from one hundredth to one quarter of an hour, at the option of the owner or operator).

3.5.2 Quarterly Total SO_2 Mass Emissions

Sum the hourly SO_2 mass emissions in lb as determined from Equation D–12 for all hours in a quarter using Equation D–13:

$$M_{SO2-qtr} = \frac{1}{2000} \sum_{all-hours-in-qtr} M_{SO2-hr} \qquad \text{(Eq. D-13)}$$

Where:

$M_{SO2\text{-}qtr}$ = Total mass of SO_2 emissions from all fuels combusted during the quarter, tons.

$M_{SO2\text{-}hr}$ = Hourly SO_2 mass emissions determined using Equation D–12, lb.

2000= Conversion factor from lb to tons.

3.5.3 Year to Date SO_2 Mass Emissions

Calculate and record SO_2 mass emissions in the year to date using Equation D–14:

$$M_{SO2\text{-}YTD} = \sum_{q=1}^{\text{current-quarter}} M_{SO2\text{-}qtr} \qquad \text{(Eq. D-14)}$$

Where:

$M_{SO2\text{-}YTD}$ = Total SO_2 mass emissions for the year to date, tons.

$M_{SO2\text{-}qtr}$ = Total SO_2 mass emissions for the quarter, tons.

3.5.4 Hourly Total Heat Input Rate and Heat Input from the Combustion of all Fuels

3.5.4.1 Determine the total heat input in mmBtu for each hour from the combustion of all fuels using Equation D–15:

$$HI_{hr} = \sum_{\text{all-fuels}} HI_{rate\text{-}i}\, t_i \qquad \text{(Eq. D-15)}$$

Where:

HI_{hr} = Total heat input from all fuels combusted during the hour, mmBtu.

$HI_{rate\text{-}i}$ =Heat input rate for each type of gas or oil combusted during the hour, mmBtu/hr.

t_i = Time each gas or oil fuel was combusted for the hour (fuel usage time), fraction of an hour (in equal increments that can range from one hundredth to one quarter of an hour, at the option of the owner or operator).

3.5.4.2 For reporting purposes, determine the heat input rate to each unit, in mmBtu/hr, for each hour from the combustion of all fuels using Equation D–15a:

$$HI_{rate\text{-}hr} = \frac{\sum_{\text{all-fuels}} HI_{rate\text{-}i}\, t_i}{t_u} \qquad \text{(Eq. D-15a)}$$

Where:

$HI_{rate\text{-}hr}$ = Total heat input rate from all fuels combusted during the hour, mmBtu/hr.

$HI_{rate\text{-}i}$ = Heat input rate for each type of gas or oil combusted during the hour, mmBtu/hr.

t_i = Time each gas or oil fuel was combusted for the hour (fuel usage time), fraction of an hour (in equal increments that can range from one hundredth to one quarter of an hour, at the option of the owner or operator).

t_u = Unit operating time

3.5.5 Quarterly Heat Input

Sum the hourly heat input values determined from equation D–15 for all hours in a quarter using Equation D–16:

$$HI_{qtr} = \sum_{\text{all-hours-in-qtr}} HI_{hr} \qquad \text{(Eq. D-16)}$$

Where:

HIqtr = Total heat input from all fuels combusted during the quarter, mmBtu.

HIqtr = Hourly heat input determined using Equation D–15, mmBtu.

3.5.6 Year-to-Date Heat Input

Calculate and record the total heat input in the year to date using Equation D–17.

$$HI_{YTD} = \sum_{q=1}^{\text{current-quarter}} HI_{qtr} \qquad \text{(Eq. D-17)}$$

HI_{YTD} = Total heat input for the year to date, mmBtu.

HI_{qtr} = Total heat input for the quarter, mmBtu.

3.6 Records and Reports

Calculate and record quarterly and cumulative SO_2 mass emissions and heat input for each calendar quarter using the procedures and equations of section 3.5 of this appendix. Calculate and record SO_2 emissions and heat input data using a data acquisition and handling system. Report these data in a standard electronic format specified by the Administrator.

[58 FR 3701, Jan. 11, 1993, as amended at 60 FR 26548, 26551, May 17, 1995; 61 FR 25585, May 22, 1996; 61 FR 59166, Nov. 20, 1996; 63 FR 57513, Oct. 27, 1998; 64 FR 28652–28663, May 26, 1999; 64 FR 37582, July 12, 1999; 67 FR 40460, 40472, June 12, 2002; 67 FR 53505, Aug. 16, 2002; 73 FR 4369, Jan. 24, 2008]

EDITOR'S NOTE: At 67 FR 53505, Aug. 16, 2002, section 2.4.1 Table D–6 was amended. However, this table is a photograph and the amendments could not be incorporated.

APPENDIX E TO PART 75—OPTIONAL NO_X EMISSIONS ESTIMATION PROTOCOL FOR GAS-FIRED PEAKING UNITS AND OIL-FIRED PEAKING UNITS

1. APPLICABILITY

1.1 Unit Operation Requirements

This NO_X emissions estimation procedure may be used in lieu of a continuous NO_X emission monitoring system (lb/mmBtu) for determining the average NO_X emission rate and hourly NO_X rate from gas-fired peaking units and oil-fired peaking units as defined in §72.2 of this chapter. If a unit's operations exceed the levels required to be a peaking unit, the owner or operator shall install and certify a NO_X-diluent continuous emission monitoring system no later than December 31 of the following calendar year. If the required CEMS has not been installed and certified by that date, the owner or operator shall report the maximum potential NO_X emission rate (MER) (as defined in §72.2 of this chapter) for each unit operating hour, starting with the first unit operating hour after the deadline and continuing until the CEMS has been provisionally certified. The provision of §75.12 apply to excepted monitoring systems under this appendix.

1.2 Certification

1.2.1 Pursuant to the procedures in §75.20, complete all testing requirements to certify use of this protocol in lieu of a NO_X continuous emission monitoring system no later than the applicable deadline specified in §75.4. Apply to the Administrator for certification to use this method no later than 45 days after the completion of all certification testing. Whenever the monitoring method is to be changed, reapply to the Administrator for certification of the new monitoring method.

1.2.2 [Reserved]

2. PROCEDURE

2.1 Initial Performance Testing

Use the following procedures for: measuring NO_X emission rates at heat input rate levels corresponding to different load levels; measuring heat input rate; and plotting the correlation between heat input rate and NO_X emission rate, in order to determine the emission rate of the unit(s). The requirements in section 6.1.2 of appendix A to this part shall be met by any Air Emissions Testing Body (AETB) performing O_2 and NO_X concentration measurements under this appendix, either for units using the excepted methodology in this appendix or for units using the low mass emissions excepted methodology in §75.19.

2.1.1 Load Selection

Establish at least four approximately equally spaced operating load points, ranging from the maximum operating load to the minimum operating load. Select the maximum and minimum operating load from the operating history of the unit during the most recent two years. (If projections indicate that the unit's maximum or minimum operating load during the next five years will be significantly different from the most recent two years, select the maximum and minimum operating load based on the projected dispatched load of the unit.) For new gas-fired peaking units or new oil-fired peaking units, select the maximum and minimum operating load from the expected maximum and minimum load to be dispatched to the unit in the first five calendar years of operation.

2.1.2 NO_X and O_2 Concentration Measurements

Use the following procedures to measure NO_X and O_2 concentration in order to determine NO_X emission rate.

2.1.2.1 For boilers, select an excess O_2 level for each fuel (and, optionally, for each combination of fuels) to be combusted that is representative for each of the four or more load levels. If a boiler operates using a single, consistent combination of fuels only, the testing may be performed using the combination rather than each fuel. If a fuel is combusted only for the purpose of testing ignition of the burners for a period of five minutes or less per ignition test or for start-up, then the boiler NO_X emission rate does not need to be tested separately for that fuel. Operate the boiler at a normal or conservatively high excess oxygen level in conjunction with these tests. Measure the NO_X and O_2 at each load point for each fuel or consistent fuel combination (and, optionally, for each combination of fuels) to be combusted. Measure the NO_X and O_2 concentrations according to method 7E and 3A in appendix A of part 60 of this chapter. Use a minimum of 12 sample points, located according to Method 1 in appendix A–1 to part 60 of this chapter. The designated representative for the unit may also petition the Administrator under §75.66 to use fewer sampling points. Such a petition shall include the proposed alternative sampling procedure and information demonstrating that there is no concentration stratification at the sampling location.

2.1.2.2 For stationary gas turbines, sample at a minimum of 12 points per run at each load level. Locate the sample points according to Method 1 in appendix A–1 to part 60 of this chapter. For each fuel or consistent combination of fuels (and, optionally, for each combination of fuels), measure the NO_X and O_2 concentrations at each sampling

point using methods 7E and 3A in appendices A–4 and A–2 to part 60 of this chapter. For diesel or dual fuel reciprocating engines, select the sampling site to be as close as practicable to the exhaust of the engine.

2.1.2.3 Allow the unit to stabilize for a minimum of 15 minutes (or longer if needed for the NO_X and O_2 readings to stabilize) prior to commencing NO_X, O_2, and heat input measurements. Determine the measurement system response time according to sections 8.2.5 and 8.2.6 of method 7E in appendix A–4 to part 60 of this chapter. When inserting the probe into the flue gas for the first sampling point in each traverse, sample for at least one minute plus twice the measurement system response time (or longer, if necessary to obtain a stable reading). For all other sampling points in each traverse, sample for at least one minute plus the measurement system response time (or longer, if necessary to obtain a stable reading). Perform three test runs at each load condition and obtain an arithmetic average of the runs for each load condition. During each test run on a boiler, record the boiler excess oxygen level at 5 minute intervals.

2.1.3 Heat Input

Measure the total heat input (mmBtu) and heat input rate during testing (mmBtu/hr) as follows:

2.1.3.1 When the unit is combusting fuel, measure and record the flow of fuel consumed. Measure the flow of fuel with an in-line flowmeter(s) and automatically record the data. If a portion of the flow is diverted from the unit without being burned, and that diversion occurs downstream of the fuel flowmeter, an in-line flowmeter is required to account for the unburned fuel. Install and calibrate in-line flow meters using the procedures and specifications contained in sections 2.1.2, 2.1.3, 2.1.4, and 2.1.5 of appendix D of this part. Correct any gaseous fuel flow rate measured at actual temperature and pressure to standard conditions of 68 °F and 29.92 inches of mercury.

2.1.3.2 For liquid fuels, analyze fuel samples taken according to the requirements of section 2.2 of appendix D of this part to determine the heat content of the fuel. Determine heat content of liquid or gaseous fuel in accordance with the procedures in appendix F of this part. Calculate the heat input rate during testing (mmBtu/hr) associated with each load condition in accordance with equations F–19 or F–20 in appendix F of this part and total heat input using equation E–1 of this appendix. Record the heat input rate at each heat input/load point.

2.1.4 Emergency Fuel

The designated representative of a unit that is restricted by its federal, State or local permit to combusting a particular fuel only during emergencies where the primary fuel is not available may claim an exemption from the requirements of this appendix for testing the NO_X emission rate during combustion of the emergency fuel. To claim this exemption, the designated representative shall include in the monitoring plan for the unit documentation that the permit restricts use of the fuel to emergencies only. When emergency fuel is combusted, report the maximum potential NO_X emission rate for the emergency fuel, in accordance with section 2.5.2.3 of this appendix. The designated representative shall also provide notice under §75.61(a)(6) for each period when the emergency fuel is combusted.

2.1.5 Tabulation of Results

Tabulate the results of each baseline correlation test for each fuel or, as applicable, combination of fuels, listing: time of test, duration, operating loads, heat input rate (mmBtu/hr), F-factors, excess oxygen levels, and NO_X concentrations (ppm) on a dry basis (at actual excess oxygen level). Convert the NO_X concentrations (ppm) to NO_X emission rates (to the nearest 0.001 lb/mm/Btu) according to equation F–5 of appendix F of this part or 19–3 in method 19 of appendix A of part 60 of this chapter, as appropriate. Calculate the NO_X emission rate in lb/mmBtu for each sampling point and determine the arithmetic average NO_X emission rate of each test run. Calculate the arithmetic average of the boiler excess oxygen readings for each test run. Record the arithmetic average of the three test runs as the NO_X emission rate and the boiler excess oxygen level for the heat input/load condition.

2.1.6 Plotting of Results

Plot the tabulated results as an x-y graph for each fuel and (as applicable) combination of fuels combusted according to the following procedures.

2.1.6.1 Plot the heat input rate (mmBtu/hr) as the independent (or x) variable and the NO_X emission rates (lb/mmBtu) as the dependent (or y) variable for each load point. Construct the graph by drawing straight line segments between each load point. Draw a horizontal line to the y-axis from the minimum heat input (load) point.

2.1.6.2 Units that co-fire gas and oil may be tested while firing gas only and oil only instead of testing with each combination of fuels. In this case, construct a graph for each fuel.

2.2 Periodic NO_X Emission Rate Testing

Retest the NO_X emission rate of the gas-fired peaking unit or the oil-fired peaking unit while combusting each type of fuel (or fuel mixture) for which a NO_X emission rate versus heat input rate correlation curve was

derived, at least once every 20 calendar quarters. If a required retest is not completed by the end of the 20th calendar quarter following the quarter of the last test, use the missing data substitution procedures in section 2.5 of this appendix, beginning with the first unit operating hour after the end of the 20th calendar quarter. Continue using the missing data procedures until the required retest has been passed. Note that missing data substitution is fuel-specific (i.e., the use of substitute data is required only when combusting a fuel (or fuel mixture) for which the retesting deadline has not been met). Each time that a new fuel-specific correlation curve is derived from retesting, the new curve shall be used to report NO_X emission rate, beginning with the first operating hour in which the fuel is combusted, following the completion of the retest. Notwithstanding this requirement, for non-Acid Rain Program units that report NO_X mass emissions and heat input data only during the ozone season under §75.74(c), if the NO_X emission rate testing is performed outside the ozone season, the new correlation curve may be used beginning with the first unit operating hour in the ozone season immediately following the testing.

2.3 Other Quality Assurance/Quality Control-Related NOx Emission Rate Testing

When the operating levels of certain parameters exceed the limits specified below, or where the Administrator issues a notice requesting retesting because the NO_X emission rate data availability for when the unit operates within all quality assurance/quality control parameters in this section since the last test is less than 90.0 percent, as calculated by the Administrator, complete retesting of the NO_X emission rate by the earlier of: (1) 30 unit operating days (as defined in §72.2 of this chapter) or (2) 180 calendar days after exceeding the limits or after the date of issuance of a notice from the Administrator to re-verify the unit's NO_X emission rate. Submit test results in accordance with §75.60 within 45 days of completing the retesting.

2.3.1 For a stationary gas turbine, select at least four operating parameters indicative of the turbine's NO_X formation characteristics, and define in the QA plan for the unit the acceptable ranges for these parameters at each tested load-heat input point. The acceptable parametric ranges should be based upon the turbine manufacturer's recommendations. Alternatively, the owner or operator may use sound engineering judgment and operating experience with the unit to establish the acceptable parametric ranges, provided that the rationale for selecting these ranges is included as part of the quality-assurance plan for the unit. If the gas turbine uses water or steam injection for NO_X control, the water/fuel or steam/fuel ratio shall be one of these parameters. During the NOx-heat input correlation tests, record the average value of each parameter for each load-heat input to ensure that the parameters are within the acceptable range. Redetermine the NO_X emission rate-heat input correlation for each fuel and (optional) combination of fuels after continuously exceeding the acceptable range of any of these parameters for one or more successive operating periods totaling more than 16 unit operating hours.

2.3.2 For a diesel or dual-fuel reciprocating engine, select at least four operating parameters indicative of the engine's NO_X formation characteristics, and define in the QA plan for the unit the acceptable ranges for these parameters at each tested load-heat input point. The acceptable parametric ranges should be based upon the engine manufacturer's recommendations. Alternatively, the owner or operator may use sound engineering judgment and operating experience with the unit to establish the acceptable parametric ranges, provided that the rationale for selecting these ranges is included as part of the quality-assurance plan for the unit. Any operating parameter critical for NO_X control shall be included. During the NO_X heat-input correlation tests, record the average value of each parameter for each load-heat input to ensure that the parameters are within the acceptable range. Redetermine the NO_X emission rate-heat input correlation for each fuel and (optional) combination or fuels after continuously exceeding the acceptable range of any of these parameters for one or more successive operating periods totaling more than 16 unit operating hours.

2.3.3 For boilers using the procedures in this appendix, the NO_X emission rate heat input correlation for each fuel and (optional) combination of fuels shall be redetermined if the excess oxygen level at any heat input rate (or unit operating load) continuously exceeds by more than 2 percentage points O_2 from the boiler excess oxygen level recorded at the same operating heat input rate during the previous NO_X emission rate test for one or more successive operating periods totaling more than 16 unit operating hours.

2.4 Procedures for Determining Hourly NO_X Emission Rate

2.4.1 Record the time (hr. and min.), load (MWge or steam load in 1000 lb/hr, or mmBtu/hr thermal output), fuel flow rate and heat input rate (using the procedures in section 2.1.3 of this appendix) for each hour during which the unit combusts fuel. Calculate the total hourly heat input using equation E–1 of this appendix. Record the heat input rate for each fuel to the nearest 0.1 mmBtu/hr. During partial unit operating hours or during

hours where more than one fuel is combusted, heat input must be represented as an hourly rate in mmBtu/hr, as if the fuel were combusted for the entire hour at that rate (and not as the actual, total heat input during that partial hour or hour) in order to ensure proper correlation with the NO_X emission rate graph.

2.4.2 Use the graph of the baseline correlation results (appropriate for the fuel or fuel combination) to determine the NO_X emissions rate (lb/mmBtu) corresponding to the heat input rate (mmBtu/hr). Input this correlation into the data acquisition and handling system for the unit. Linearly interpolate to 0.1 mmBtu/hr heat input rate and 0.001 lb/mmBtu NO_X. For each type of fuel, calculate NO_X emission rate using the baseline correlation results from the most recent test with that fuel, beginning with the date and hour of the completion of the most recent test.

2.4.3 To determine the NO_X emission rate for a unit co-firing fuels that has not been tested for that combination of fuels, interpolate between the NO_X emission rate for each fuel as follows. Determine the heat input rate for the hour (in mmBtu/hr) for each fuel and select the corresponding NO_X emission rate for each fuel on the appropriate graph. (When a fuel is combusted for a partial hour, determine the fuel usage time for each fuel and determine the heat input rate from each fuel as if that fuel were combusted at that rate for the entire hour in order to select the corresponding NO_X emission rate.) Calculate the total heat input to the unit in mmBtu for the hour from all fuel combusted using Equation E–1. Calculate a Btu-weighted average of the emission rates for all fuels using Equation E–2 of this appendix. For each type of fuel, calculate NO_X emission rate using the baseline correlation results from the most recent test with that fuel, beginning with the date and hour of the completion of the most recent test.

2.4.4 For each hour, record the critical quality assurance parameters, as identified in the monitoring plan, and as required by section 2.3 of this appendix from the date and hour of the completion of the most recent test for each type of fuel.

2.5 Missing Data Procedures

Provide substitute data for each unit electing to use this alternative procedure whenever a valid quality-assured hour of NO_X emission rate data has not been obtained according to the procedures and specifications of this appendix. For the purpose of providing substitute data, calculate the maximum potential NO_X emission rate (as defined in §72.2 of this chapter) for each type of fuel combusted in the unit.

2.5.1 Use the procedures of this section whenever any of the quality assurance/quality control parameters exceeds the limits in section 2.3 of this appendix or whenever any of the quality assurance/quality control parameters are not available.

2.5.2 Substitute missing NO_X emission rate data using the highest NO_X emission rate tabulated during the most recent set of baseline correlation tests for the same fuel or, if applicable, combination of fuels, except as provided in sections 2.5.2.1, 2.5.2.2, 2.5.2.3, and 2.5.2.4 of this appendix.

2.5.2.1 If the measured heat input rate during any unit operating hour is higher than the highest heat input rate from the baseline correlation tests, the NO_X emission rate for the hour is considered to be missing. Provide substitute data for each such hour, according to section 2.5.2.1.1 or 2.5.2.1.2 of this appendix, as applicable. Either:

2.5.2.1.1 Substitute the higher of: the NO_X emission rate obtained by linear extrapolation of the correlation curve, or the maximum potential NO_X emission rate (MER) (as defined in §72.2 of this chapter), specific to the type of fuel being combusted. (For fuel mixtures, substitute the highest NO_X MER value for any fuel in the mixture.) For units with NO_X emission controls, the extrapolated NO_X emission rate may only be used if the controls are documented (e.g., by parametric data) to be operating properly during the missing data period (see section 2.5.2.2 of this appendix); or

2.5.2.1.2 Substitute 1.25 times the highest NO_X emission rate from the baseline correlation tests for the fuel (or fuel mixture) being combusted in the unit, not to exceed the MER for that fuel (or mixture). For units with NO_X emission controls, the option to report 1.25 times the highest emission rate from the correlation curve may only be used if the controls are documented (e.g., by parametric data) to be operating properly during the missing data period (see section 2.5.2.2 of this appendix).

2.5.2.2 For a unit with add-on NO_X emission controls (e.g., steam or water injection, selective catalytic reduction), if, for any unit operating hour, the emission controls are either not in operation or if appropriate parametric data are unavailable to ensure proper operation of the controls, the NO_X emission rate for the hour is considered to be missing. Substitute the fuel-specific MER (as defined in §72.2 of this chapter) for each such hour.

2.5.2.3 When emergency fuel (as defined in §72.2) is combusted in the unit, report the fuel-specific NO_X MER for each hour that the fuel is combusted, unless a NO_X correlation curve has been derived for the fuel.

2.5.2.4 Whenever 20 full calendar quarters have elapsed following the quarter of the last baseline correlation test for a particular type of fuel (or fuel mixture), without a subsequent baseline correlation test being done for that type of fuel (or fuel mixture), substitute the fuel-specific NO_X MER (as defined

in §72.2 of this chapter) for each hour in which that fuel (or mixture) is combusted until a new baseline correlation test for that fuel (or mixture) has been successfully completed. For fuel mixtures, report the highest of the individual MER values for the components of the mixture.

2.5.3 Maintain a record indicating which data are substitute data and the reasons for the failure to provide a valid quality-assured hour of NO_X emission rate data according to the procedures and specifications of this appendix.

2.5.4 Substitute missing data from a fuel flowmeter using the procedures in section 2.4.2 of appendix D to this part.

2.5.5 Substitute missing data for gross calorific value of fuel using the procedures in sections 2.4.1 of appendix D to this part.

3. CALCULATIONS

3.1 Heat Input

Calculate the total heat input by summing the product of heat input rate and fuel usage time of each fuel, as in the following equation:

$$H_T = HI_{fuel1}t_1 + HI_{fuel2}t_2 + HI_{fuel3}t_3 + \ldots + HI_{lastfuel}t_{last} \qquad \text{(Eq. E-1)}$$

Where:

H_T = Total heat input of fuel flow or a combination of fuel flows to a unit, mmBtu.

$HI_{fuel\ 1,2,3,\ldots last}$ = Heat input rate from each fuel, in mmBtu/hr as determined using Equation F–19 or F–20 in section 5.5 of appendix F to this part, mmBtu/hr.

$t_{1,2,3,\ldots last}$ = Fuel usage time for each fuel (rounded up to the nearest fraction of an hour (in equal increments that can range from one hundredth to one quarter of an hour, at the option of the owner or operator)).

3.2 F-factors

Determine the F-factors for each fuel or combination of fuels to be combusted according to section 3.3 of appendix F of this part.

3.3 NO_X Emission Rate

3.3.1 Conversion from Concentration to Emission Rate

Convert the NO_X concentrations (ppm) and O_2 concentrations to NO_X emission rates (to the nearest 0.01 lb/mmBtu for tests performed prior to April 1, 2000, or to the nearest 0.001 lb/mmBtu for tests performed on and after April 1, 2000), according to the appropriate one of the following equations: F–5 in appendix F to this part for dry basis concentration measurements or 19–3 in Method 19 of appendix A to part 60 of this chapter for wet basis concentration measurements.

3.3.2 Quarterly Average NO_X Emission Rate

Report the quarterly average emission rate (lb/mmBtu) as required in subpart G of this part. Calculate the quarterly average NO_X emission rate according to equation F–9 in appendix F of this part.

3.3.3 Annual Average NO_X Emission Rate

Report the average emission rate (lb/mmBtu) for the calendar year as required in subpart G of this part. Calculate the average NO_X emission rate according to equation F–10 in appendix F of this part.

3.3.4 Average NO_X Emission Rate During Co-firing of Fuels

$$E_h = \frac{\sum_{f=1}^{\text{all fuels}} \left(E_f \times HI_f t_f\right)}{H_T} \qquad \text{(Eq. E-2)}$$

Where:

E_h = NO_X emission rate for the unit for the hour, lb/mmBtu.

E_f = NO_X emission rate for the unit for a given fuel at heat input rate HI_f, lb/mmBtu.

HI_f = Heat input rate for the hour for a given fuel, during the fuel usage time, as determined using Equation F–19 or F–20 in section 5.5 of appendix F to this part, mmBtu/hr.

H_T = Total heat input for all fuels for the hour from Equation E–1.

t_f = Fuel usage time for each fuel (rounded up to the nearest fraction of an hour (in equal increments that can range from one hundredth to one quarter of an hour, at the option of the owner or operator)).

NOTE: For hours where a fuel is combusted for only part of the hour, use the fuel flow rate or mass flow rate during the fuel usage time, instead of the total fuel flow or mass flow during the hour, when calculating heat input rate using Equation F–19 or F–20.

4. QUALITY ASSURANCE/QUALITY CONTROL PLAN

Include a section on the NO_X emission rate determination as part of the monitoring quality assurance/quality control plan required under §75.21 and appendix B of this part for each gas-fired peaking unit and each oil-fired peaking unit. In this section present

information including, but not limited to, the following: (1) a copy of all data and results from the initial NO_X emission rate testing, including the values of quality assurance parameters specified in section 2.3 of this appendix; (2) a copy of all data and results from the most recent NO_X emission rate load correlation testing; (3) a copy of the recommended range of quality assurance- and quality control-related operating parameters.

4.1 Submit a copy of the recommended range of operating parameter values, and the range of operating parameter values recorded during the previous NO_X emission rate test that determined the unit's NO_X emission rate, along with the unit's revised monitoring plan submitted with the certification application.

4.2 Keep records of these operating parameters for each hour of operation in order to demonstrate that a unit is remaining within the recommended operating range.

[58 FR 3701, Jan. 11, 1993, as amended at 60 FR 26551-26553, May 17, 1995; 64 FR 28665, May 26, 1999; 67 FR 40473, 40474, June 12, 2002; 67 FR 53505, Aug. 16, 2002; 73 FR 4372, Jan. 24, 2008]

APPENDIX F TO PART 75—CONVERSION PROCEDURES

1. APPLICABILITY

Use the procedures in this appendix to convert measured data from a monitor or continuous emission monitoring system into the appropriate units of the standard.

2. PROCEDURES FOR SO_2 EMISSIONS

Use the following procedures to compute hourly SO_2 mass emission rate (in lb/hr) and quarterly and annual SO_2 total mass emissions (in tons).

2.1 When measurements of SO_2 concentration and flow rate are on a wet basis, use the following equation to compute hourly SO_2 mass emission rate (in lb/hr):

$$E_h = KC_hQ_h \qquad \text{(Eq. F-1)}$$

Where:

E_h = Hourly SO_2 mass emission rate during unit operation, lb/hr.

$K = 1.660 \times 10^{-7}$ for SO_2, (lb/scf)/ppm.

C_h = Hourly average SO_2 concentration during unit operation, stack moisture basis, ppm.

Q_h = Hourly average volumetric flow rate during unit operation, stack moisture basis, scfh.

2.2 When measurements by the SO_2 pollutant concentration monitor are on a dry basis and the flow rate monitor measurements are on a wet basis, use the following equation to compute hourly SO_2 mass emission rate (in lb/hr):

$$E_h = K\,C_{hp}Q_{hs}\frac{\left(100 - \%H_2O\right)}{100} \qquad \text{(Eq. F-2)}$$

where:

E_h = Hourly SO_2 mass emission rate during unit operation, lb/hr.

$K = 1.660 \times 10^{-7}$ for SO_2, (lb/scf)/ppm.

C_{hp} = Hourly average SO_2 concentration during unit operation, ppm (dry).

Q_{hs} = Hourly average volumetric flow rate during unit operation, scfh as measured (wet).

$\%H_2O$ = Hourly average stack moisture content during unit operation, percent by volume.

2.3 Use the following equations to calculate total SO_2 mass emissions for each calendar quarter (Equation F–3) and for each calendar year (Equation F–4), in tons:

$$E_q = \frac{\sum_{h=1}^{n} E_h t_h}{2000}$$

(Eq. F–3)

Where:

E_q = Quarterly total SO_2 mass emissions, tons.

E_h = Hourly SO_2 mass emission rate, lb/hr.

t_h = Unit operating time, hour or fraction of an hour (in equal increments that can range from one hundredth to one quarter of an hour, at the option of the owner or operator).

n = Number of hourly SO_2 emissions values during calendar quarter.

2000 = Conversion of 2000 lb per ton.

$$E_a = \sum_{q=1}^{4} E_q \qquad \text{(Eq. F-4)}$$

Where:

E_a = Annual total SO_2 mass emissions, tons.
E_q = Quarterly SO_2 mass emissions, tons.
q = Quarters for which E_q are available during calendar year.

2.4 Round all SO_2 mass emission rates and totals to the nearest tenth.

3. PROCEDURES FOR NO_X EMISSION RATE

Use the following procedures to convert continuous emission monitoring system measurements of NO_X concentration (ppm) and diluent concentration (percentage) into NO_X emission rates (in lb/mmBtu). Perform measurements of NO_X and diluent (O_2 or CO_2) concentrations on the same moisture (wet or dry) basis.

3.1 When the NO_X continuous emission monitoring system uses O_2 as the diluent, and measurements are performed on a dry basis, use the following conversion procedure:

$$E = K\, C_h\, F\, \frac{20.9}{20.9 - \%O_2}$$

(Eq. F–5)

where,

K, E, C_h, F, and $\%O_2$ are defined in section 3.3 of this appendix. When measurements are performed on a wet basis, use the equations in Method 19 in appendix A–7 to part 60 of this chapter.

3.2 When the NO_X continuous emission monitoring system uses CO_2 as the diluent, use the following conversion procedure:

$$E = K\, C_h\, F_c\, \frac{100}{\%CO_2}$$

(Eq. F–6)

where:

K, E, Ch, Fc, and $\%CO_2$ are defined in section 3.3 of this appendix.

When CO_2 and NO_X measurements are performed on a different moisture basis, use the equations in Method 19 in appendix A–7 to part 60 of this chapter.

3.3 Use the definitions listed below to derive values for the parameters in equations F–5 and F–6 of this appendix, or (if applicable) in the equations in Method 19 in appendix A–7 to part 60 of this chapter.

3.3.1 $K=1.194\times10^{-7}$ (lb/dscf)/ppm NO_X.

3.3.2 E = Pollutant emissions during unit operation, lb/mmBtu.

3.3.3 C_h = Hourly average pollutant concentration during unit operation, ppm.

3.3.4 $\%O_2$, $\%CO_2$ = Oxygen or carbon dioxide volume during unit operation (expressed as percent O_2 or CO_2).

3.3.4.1 For boilers, a minimum concentration of 5.0 percent CO_2 or a maximum concentration of 14.0 percent O_2 may be substituted for the measured diluent gas concentration value for any operating hour in which the hourly average CO_2 concentration is < 5.0 percent CO_2 or the hourly average O_2 concentration is > 14.0 percent O_2. For stationary gas turbines, a minimum concentration of 1.0 percent CO_2 or a maximum concentration of 19.0 percent O_2 may be substituted for measured diluent gas concentration values for any operating hour in which the hourly average CO_2 concentration is < 1.0 percent CO_2 or the hourly average O_2 concentration is > 19.0 percent O_2.

3.3.4.2 If NO_X emission rate is calculated using either Equation 19–3 or 19–5 in Method 19 in appendix A–7 to part 60 of this chapter, a variant of the equation shall be used whenever the diluent cap is applied. The modified equations shall be designated as Equations 19–3D and 19–5D, respectively. Equation 19–3D is structurally the same as Equation 19–3, except that the term "$\%O_{2w}$" in the denominator is replaced with the term "$\%O_{2dc} \times [(100 - \%\ H_2O)/100]$", where $\%O_{2dc}$ is the diluent cap value. The numerator of Equation 19–5D is the same as Equation 19–5; however, the denominator of Equation 19–5D is simply "$20.9 - \%O_{2dc}$", where $\%O_{2dc}$ is the diluent cap value.

3.3.5 F, F_c=a factor representing a ratio of the volume of dry flue gases generated to the caloric value of the fuel combusted (F), and a factor representing a ratio of the volume of CO_2 generated to the calorific value of the fuel combusted (F_c), respectively. Table 1 lists the values of F and F_c for different fuels.

TABLE 1—F- AND F_c-FACTORS [1]

Fuel	F-factor (dscf/mmBtu)	F_C-factor (scf CO_2/mmBtu)
Coal (as defined by ASTM D388–99 [2]):		
Anthracite	10,100	1,970
Bituminous	9,780	1,800
Subbituminous	9,820	1,840
Lignite	9,860	1,910
Petroleum Coke	9,830	1,850
Tire Derived Fuel	10,260	1,800
Oil	9,190	1,420
Gas:		
Natural gas	8,710	1,040
Propane	8,710	1,190
Butane	8,710	1,250
Wood:		
Bark	9,600	1,920
Wood residue	9,240	1,830

[1] Determined at standard conditions: 20 °C (68 °F) and 29.92 inches of mercury.

[2] Incorporated by reference under § 75.6 of this part.

3.3.6 Equations F–7a and F–7b may be used in lieu of the F or F_c factors specified in Section 3.3.5 of this appendix to calculate a site-specific dry-basis F factor (dscf/mmBtu) or a site-specific F_c factor (scf CO_2/mmBtu), on either a dry or wet basis. At a minimum, the site-specific F or F_c factor must be based on 9 samples of the fuel. Fuel samples taken during each run of a RATA are acceptable for this purpose. The site-specific F or F_c factor must be re-determined at least annually, and the value from the most recent determination must be used in the emission calculations. Alternatively, the previous F or F_c value may continue to be used if it is higher than the value obtained in the most recent determination. The owner or operator shall keep records of all site-specific F or F_c determinations, active for at least 3 years. (Calculate all F- and F_c factors at standard conditions of 20 °C (68 °F) and 29.92 inches of mercury).

$$F = \frac{3.64(\%H) + 1.53(\%C) + 0.57(\%S) + 0.14(\%N) - 0.46(\%O)}{GCV} \times 10^6$$

(Eq. F–7a)

$$F_c = \frac{321 \times 10^3 (\%C)}{GCV}$$

(Eq. F–7b)

3.3.6.1 H, C, S, N, and O are content by weight of hydrogen, carbon, sulfur, nitrogen, and oxygen (expressed as percent), respectively, as determined on the same basis as the gross calorific value (GCV) by ultimate analysis of the fuel combusted using ASTM D3176–89 (Reapproved 2002), Standard Practice for Ultimate Analysis of Coal and Coke, (solid fuels), ASTM D5291–02, Standard Test Methods for Instrumental Determination of Carbon, Hydrogen, and Nitrogen in Petroleum Products and Lubricants, (liquid fuels) or computed from results using ASTM D1945–96 (Reapproved 2001), Standard Test Method for Analysis of Natural Gas by Gas Chromatography, or ASTM D1946–90 (Reapproved 2006), Standard Practice for Analysis of Reformed Gas by Gas Chromatography, (gaseous fuels) as applicable. (All of these methods are incorporated by reference under § 75.6 of this part.)

3.3.6.2 GCV is the gross calorific value (Btu/lb) of the fuel combusted determined by ASTM D5865–01a, Standard Test Method for Gross Calorific Value of Coal and Coke, and ASTM D240–00, Standard Test Method for Heat of Combustion of Liquid Hydrocarbon Fuels by Bomb Calorimeter, or ASTM D4809–00, Standard Test Method for Heat of Combustion of Liquid Hydrocarbon Fuels by Bomb Calorimeter (Precision Method) for oil; and ASTM D3588–98, Standard Practice for Calculating Heat Value, Compressibility Factor, and Relative Density of Gaseous Fuels, ASTM D4891–89 (Reapproved 2006), Standard Test Method for Heating Value of Gases in Natural Gas Range by Stoichiometric Combustion, GPA Standard 2172–96 Calculation of Gross Heating Value, Relative Density and Compressibility Factor for Natural Gas Mixtures from Compositional Analysis, GPA Standard 2261–00 Analysis for Natural Gas and Similar Gaseous Mixtures by Gas Chromatography, or ASTM D1826–94 (Reapproved 1998), Standard Test Method for Calorific (Heating) Value of Gases in Natural Gas Range by Continuous Recording Calorimeter, for gaseous fuels, as applicable. (All of these methods are incorporated by reference under § 75.6 of this part).

3.3.6.3 For affected units that combust a combination of a fuel (or fuels) listed in Table 1 in section 3.3.5 of this appendix with any fuel(s) not listed in Table 1, the F or F_c value is subject to the Administrator's approval under § 75.66.

3.3.6.4 For affected units that combust combinations of fuels listed in Table 1 in section 3.3.5 of this appendix, prorate the F or F_c factors determined by section 3.3.5 or 3.3.6 of this appendix in accordance with the applicable formula as follows:

$$F = \sum_{i=1}^{n} X_i F_i \qquad F_c = \sum_{i=1}^{n} X_i \left(F_c\right)_i \qquad \text{(Eq. F-8)}$$

Where,

X_i = Fraction of total heat input derived from each type of fuel (*e.g.*, natural gas, bituminous coal, wood). Each X_i value shall

be determined from the best available information on the quantity of fuel combusted and the GCV value, over a specified time period. The owner or operator shall explain the method used to calculate X_i in the hardcopy portion of the monitoring plan for the unit. The X_i values may be determined and updated either hourly, daily, weekly, or monthly. In all cases, the prorated F-factor used in the emission calculations shall be determined using the X_i values from the most recent update.

F_i or $(F_c)_i$ = Applicable F or Fc factor for each fuel type determined in accordance with Section 3.3.5 or 3.3.6 of this appendix.

n = Number of fuels being combusted in combination.

3.3.6.5 As an alternative to prorating the F or Fc factor as described in section 3.3.6.4 of this appendix, a ''worst-case'' F or F_c factor may be reported for any unit operating hour. The worst-case F or F_c factor shall be the highest F or F_c value for any of the fuels combusted in the unit.

3.4 Use the following equations to calculate the average NO_X emission rate for each calendar quarter (Equation F–9) and the average emission rate for the calendar year (Equation F–10), in lb/mmBtu:

$$E_q = \sum_{i=1}^{n} \frac{E_i}{n} \qquad \text{(Eq. F-9)}$$

Where:

E_q = Quarterly average NO_X emission rate, lb/mmBtu.

E_i = Hourly average NO_X emission rate during unit operation, lb/mmBtu.

n = Number of hourly rates during calendar quarter.

$$E_a = \sum_{i=1}^{m} \frac{E_i}{m} \qquad \text{(Eq. F-10)}$$

Where:

E_a = Average NO_X emission rate for the calendar year, lb/mmBtu.

E_i = Hourly average NO_X emission rate during unit operation, lb/mmBtu.

m = Number of hourly rates for which E_i is available in the calendar year.

3.5 Round all NO_X emission rates to the nearest 0.001 lb/mmBtu.

4. Procedures for CO_2 Mass Emissions

Use the following procedures to convert continuous emission monitoring system measurements of CO_2 concentration (percentage) and volumetric flow rate (scfh) into CO_2 mass emissions (in tons/day) when the owner or operator uses a CO_2 continuous emission monitoring system (consisting of a CO_2 or O_2 pollutant monitor) and a flow monitoring system to monitor CO_2 emissions from an affected unit.

4.1 When CO_2 concentration is measured on a wet basis, use the following equation to calculate hourly CO_2 mass emissions rates (in tons/hr):

$$E_h = KC_hQ_h \qquad \text{(Eq. F-11)}$$

Where:

E_h = Hourly CO_2 mass emission rate during unit operation, tons/hr.

$K = 5.7\times10^{-7}$ for CO_2, (tons/scf) /%CO_2.

C_h = Hourly average CO_2 concentration during unit operation, wet basis, either measured directly with a CO_2 monitor or calculated from wet-basis O_2 data using Equation F–14b, percent CO_2.

Q_h = Hourly average volumetric flow rate during unit operation, wet basis, scfh.

4.2 When CO_2 concentration is measured on a dry basis, use Equation F–2 to calculate the hourly CO_2 mass emission rate (in tons/hr) with a K-value of 5.7×10^{-7} (tons/scf) percent CO_2, where E_h = hourly CO_2 mass emission rate, tons/hr and C_{hp} = hourly average CO_2 concentration in flue, dry basis, percent CO_2.

4.3 Use the following equations to calculate total CO_2 mass emissions for each calendar quarter (Equation F–12) and for each calendar year (Equation F–13):

$$E_{CO_2q} = \sum_{h=1}^{H_R} E_h t_h \qquad \text{(Eq. F-12)}$$

Where:

E_{CO2q} = Quarterly total CO_2 mass emissions, tons.

E_h = Hourly CO_2 mass emission rate, tons/hr.

t_h=Unit operating time, in hours or fraction of an hour (in equal increments that can range from one hundredth to one quarter of an hour, at the option of the owner or operator).

H_R = Number of hourly CO_2 mass emission rates available during calendar quarter.

$$E_{CO_{2a}} = \sum_{q=1}^{4} E_{CO_{2q}} \qquad \text{(Eq. F-13)}$$

Where:

E_{CO2a} = Annual total CO_2 mass emissions, tons.

E_{CO2q} = Quarterly total CO_2 mass emissions, tons.

q = Quarters for which E_{CO2q} are available during calendar year.

4.4 For an affected unit, when the owner or operator is continuously monitoring O_2 concentration (in percent by volume) of flue gases using an O_2 monitor, use the equations and procedures in section 4.4.1 and 4.4.2 of

this appendix to determine hourly CO_2 mass emissions (in tons).

4.4.1 If the owner or operator elects to use data from an O_2 monitor to calculate CO_2 concentration, the appropriate F and F_C factors from section 3.3.5 of this appendix shall be used in one of the following equations (as applicable) to determine hourly average CO_2 concentration of flue gases (in percent by volume) from the measured hourly average O_2 concentration:

$$CO_{2d} = 100 \frac{F_c}{F} \frac{20.9 - O_{2d}}{20.9} \qquad \text{(Eq. F-14a)}$$

Where:

CO_{2d} = Hourly average CO_2 concentration during unit operation, percent by volume, dry basis.

F, F_C = F-factor or carbon-based F_c-factor from section 3.3.5 of this appendix.

20.9 = Percentage of O_2 in ambient air.

O_{2d} = Hourly average O_2 concentration during unit operation, percent by volume, dry basis.

$$CO_{2w} = \frac{100}{20.9} \frac{F_c}{F} \left[20.9 \left(\frac{100 - \%H_2O}{100} \right) - O_{2w} \right] \qquad \text{(Eq. F-14b)}$$

Where:

CO_{2w} = Hourly average CO_2 concentration during unit operation, percent by volume, wet basis.

O_{2w} = Hourly average O_2 concentration during unit operation, percent by volume, wet basis.

F, F_c = F-factor or carbon-based FC-factor from section 3.3.5 of this appendix.

20.9 = Percentage of O_2 in ambient air.

$\%H_2O$ = Moisture content of gas in the stack, percent.

For any hour where Equation F–14a or F–14b results in a negative hourly average CO_2 value, 0.0% CO_{2w} shall be recorded as the average CO_2 value for that hour.

4.4.2 Determine CO_2 mass emissions (in tons) from hourly average CO_2 concentration (percent by volume) using equation F–11 and the procedure in section 4.1, where O_2 measurements are on a wet basis, or using the procedures in section 4.2 of this appendix, where O_2 measurements are on a dry basis.

5. Procedures for Heat Input

Use the following procedures to compute heat input rate to an affected unit (in mmBtu/hr or mmBtu/day):

5.1 Calculate and record heat input rate to an affected unit on an hourly basis, except as provided in sections 5.5 through 5.5.7. The owner or operator may choose to use the provisions specified in §75.16(e) or in section 2.1.2 of appendix D to this part in conjunction with the procedures provided in sections 5.6 through 5.6.2 to apportion heat input among each unit using the common stack or common pipe header.

5.2 For an affected unit that has a flow monitor (or approved alternate monitoring system under subpart E of this part for measuring volumetric flow rate) and a diluent gas (O_2 or CO_2) monitor, use the recorded data from these monitors and one of the following equations to calculate hourly heat input rate (in mmBtu/hr).

5.2.1 When measurements of CO_2 concentration are on a wet basis, use the following equation:

$$HI = Q_w \frac{1}{F_c} \frac{\%CO_{2w}}{100} \qquad \text{(Eq. F-15)}$$

Where:

HI = Hourly heat input rate during unit operation, mmBtu/hr.

Q_w = Hourly average volumetric flow rate during unit operation, wet basis, scfh.

F_c = Carbon-based F-factor, listed in section 3.3.5 of this appendix for each fuel, scf/mmBtu.

$\%CO_{2w}$ = Hourly concentration of CO_2 during unit operation, percent CO_2 wet basis.

5.2.2 When measurements of CO_2 concentration are on a dry basis, use the following equation:

$$HI = Q_h \left[\frac{(100 - \%H_2O)}{100F_c} \right] \left(\frac{\%CO_{2d}}{100} \right) \qquad \text{(Eq. F-16)}$$

Where:

HI = Hourly heat input rate during unit operation, mmBtu/hr.

Q_h = Hourly average volumetric flow rate during unit operation, wet basis, scfh.

F_c = Carbon-based F-Factor, listed in section 3.3.5 of this appendix for each fuel, scf/mmBtu.

$\%CO_{2d}$ = Hourly concentration of CO_2 during unit operation, percent CO_2 dry basis.

$\%H_2O$ = Moisture content of gas in the stack, percent.

5.2.3 When measurements of O_2 concentration are on a wet basis, use the following equation:

$$HI = Q_w \frac{1}{F} \frac{\left[(20.9/100)(100 - \%H_2O) - \%O_{2w} \right]}{20.9} \qquad \text{(Eq. F-17)}$$

Where:

HI = Hourly heat input rate during unit operation, mmBtu/hr.

Q_w = Hourly average volumetric flow rate during unit operation, wet basis, scfh.

F = Dry basis F-factor, listed in section 3.3.5 of this appendix for each fuel, dscf/mmBtu.

$\%O_{2w}$ = Hourly concentration of O_2 during unit operation, percent O_2 wet basis. For any operating hour where Equation F–17 results in an hourly heat input rate that is ≤ 0.0 mmBtu/hr, 1.0 mmBtu/hr shall be recorded and reported as the heat input rate for that hour.

$\%H_2O$ = Hourly average stack moisture content, percent by volume.

5.2.4 When measurements of O_2 concentration are on a dry basis, use the following equation:

$$HI = Q_w \left[\frac{(100 - \%H_2O)}{100\ F} \right] \left[\frac{(20.9 - \%O_{2d})}{20.9} \right] \qquad \text{(Eq. F-18)}$$

Where:

HI = Hourly heat input rate during unit operation, mmBtu/hr.

Q_w = Hourly average volumetric flow during unit operation, wet basis, scfh.

F = Dry basis F-factor, listed in section 3.3.5 of this appendix for each fuel, dscf/mmBtu.

$\%H_2O$ = Moisture content of the stack gas, percent.

$\%O_{2d}$ = Hourly concentration of O_2 during unit operation, percent O_2 dry basis.

5.3 Heat Input Summation (for Heat Input Determined Using a Flow Monitor and Diluent Monitor)

5.3.1 Calculate total quarterly heat input for a unit or common stack using a flow monitor and diluent monitor to calculate heat input, using the following equation:

$$HI_q = \sum_{hour=1}^{n} HI_i t_i \qquad \text{(Eq. F-18a)}$$

Where:

HI_q = Total heat input for the quarter, mmBtu.

HI_i = Hourly heat input rate during unit operation, using Equation F–15, F–16, F–17, or F–18, mmBtu/hr.

t_i = Hourly operating time for the unit or common stack, hour or fraction of an hour (in equal increments that can range from one hundredth to one quarter of an hour, at the option of the owner or operator).

5.3.2 Calculate total cumulative heat input for a unit or common stack using a flow monitor and diluent monitor to calculate heat input, using the following equation:

$$HI_c = \sum_{q=1}^{\text{the current quarter}} HI_q \qquad \text{(Eq. F-18b)}$$

Where:

HI_c = Total heat input for the year to date, mmBtu.

HI_q = Total heat input for the quarter, mmBtu.

5.4 [Reserved]

5.5 For a gas-fired or oil-fired unit that does not have a flow monitor and is using the procedures specified in appendix D to this part to monitor SO_2 emissions or for any unit using a common stack for which the owner or operator chooses to determine heat input by fuel sampling and analysis, use the following procedures to calculate hourly heat input rate in mmBtu/hr. The procedures of section 5.5.3 of this appendix shall not be used to determine heat input from a coal unit that is required to comply with the provisions of this part for monitoring, recording, and reporting NO_X mass emissions under a State or federal NO_X mass emission reduction program.

5.5.1 (a) When the unit is combusting oil, use the following equation to calculate hourly heat input rate:

$$HI_o = M_o \frac{GCV_o}{10^6} \qquad \text{(Eq. F-19)}$$

Where:

HI_o = Hourly heat input rate from oil, mmBtu/hr.

M_o = Mass rate of oil consumed per hour, as determined using procedures in appendix D to this part, in lb/hr, tons/hr, or kg/hr.

GCV_o = Gross calorific value of oil, as measured by ASTM D240–00, ASTM D5865–01a, or ASTM D4809–00 for each oil sample under section 2.2 of appendix D to this part, Btu/unit mass (all incorporated by reference under (§75.6 of this part).

10^6 = Conversion of Btu to mmBtu.

(b) When performing oil sampling and analysis solely for the purpose of the missing data procedures in §75.36, oil samples for measuring GCV may be taken weekly, and the procedures specified in appendix D to this part for determining the mass rate of oil consumed per hour are optional.

5.5.2 When the unit is combusting gaseous fuels, use the following equation to calculate heat input rate from gaseous fuels for each hour:

$$HI_g = \frac{\left(Q_g \times GCV_g\right)}{10^6} \qquad \text{(Eq. F-20)}$$

Where:

HI_g = Hourly heat input rate from gaseous fuel, mmBtu/hour.

Q_g = Metered flow rate of gaseous fuel combusted during unit operation, hundred standard cubic feet per hour.

GCV_g = Gross calorific value of gaseous fuel, as determined by sampling (for each delivery for gaseous fuel in lots, for each daily gas sample for gaseous fuel delivered by pipeline, for each hourly average for gas measured hourly with a gas chromatograph, or for each monthly sample of pipeline natural gas, or as verified by the contractual supplier at least once every month pipeline natural gas is combusted, as specified in section 2.3 of appendix D to this part) using ASTM D1826–94 (Reapproved 1998), ASTM D3588–98, ASTM D4891–89 (Reapproved 2006), GPA Standard 2172–96 Calculation of Gross Heating Value, Relative Density and Compressibility Factor for Natural Gas Mixtures from Compositional Analysis, or GPA Standard 2261–00 Analysis for Natural Gas and Similar Gaseous Mixtures by Gas Chromatography, Btu/100 scf (all incorporated by reference under §75.6 of this part).

10^6 = Conversion of Btu to mmBtu.

5.5.3 When the unit is combusting coal, use the procedures, methods, and equations in sections 5.5.3.1–5.5.3.3 of this appendix to determine the heat input from coal for each 24-hour period. (All ASTM methods are incorporated by reference under §75.6 of this part.)

5.5.3.1 Perform coal sampling daily according to section 5.3.2.2 in Method 19 in appendix A to part 60 of this chapter and use ASTM D2234–00, Standard Practice for Collection of a Gross Sample of Coal, (incorporated by reference under §75.6 of this part) Type I, Conditions A, B, or C and systematic spacing for sampling. (When performing coal sampling solely for the purposes of the missing data procedures in §75.36, use of ASTM D2234–00 is optional, and coal samples may be taken weekly.)

5.5.3.2 All ASTM methods are incorporated by reference under §75.6 of this part. Use ASTM D2013–01, Standard Practice for Preparing Coal Samples for Analysis, for preparation of a daily coal sample and analyze each daily coal sample for gross calorific value using ASTM D5865–01a, Standard Test Method for Gross Calorific Value of Coal and Coke. On-line coal analysis may also be used if the on-line analytical instrument has been demonstrated to be equivalent to the applicable ASTM methods under §§75.23 and 75.66.

5.5.3.3 Calculate the heat input from coal using the following equation:

$$HI_c = M_c \frac{GCV_c}{500} \qquad \text{(Eq. F–21)}$$

(Eq. F–21)

where:

HIc = Daily heat input from coal, mmBtu/day.

Mc = Mass of coal consumed per day, as measured and recorded in company records, tons.

GCV_c = Gross calorific value of coal sample, as measured by ASTM D3176–89 (Reapproved 2002), or ASTM D5865–01a, Btu/lb. (incorporated by reference under §75.6 of this part).

500 = Conversion of Btu/lb to mmBtu/ton.

5.5.4 For units obtaining heat input values daily instead of hourly, apportion the daily heat input using the fraction of the daily steam load or daily unit operating load used each hour in order to obtain HI_i for use in the above equations. Alternatively, use the hourly mass of coal consumed in equation F–21.

5.5.5 If a daily fuel sampling value for gross calorific value is not available, substitute the maximum gross calorific value measured from the previous 30 daily samples. If a monthly fuel sampling value for gross calorific value is not available, substitute the maximum gross calorific value measured from the previous 3 monthly samples.

5.5.6 If a fuel flow value is not available, use the fuel flowmeter missing data procedures in section 2.4 of appendix D of this part. If a daily coal consumption value is not available, substitute the maximum fuel feed rate during the previous thirty days when the unit burned coal.

5.5.7 Results for samples must be available no later than thirty calendar days after the sample is composited or taken. However, during an audit, the Administrator may require that the results be available in five business days, or sooner if practicable.

5.6 Heat Input Rate Apportionment for Units Sharing a Common Stack or Pipe

5.6.1 Where applicable, the owner or operator of an affected unit that determines heat input rate at the unit level by apportioning the heat input monitored at a common stack or common pipe using megawatts shall apportion the heat input rate using the following equation:

$$HI_i = HI_{CS}\left(\frac{t_{CS}}{t_i}\right)\left[\frac{MW_i t_i}{\sum_{i=1}^{n} MW_i t_i}\right] \qquad \text{(Eq. F-21a)}$$

Where:

HI_i = Heat input rate for a unit, mmBtu/hr.

HI_{cs} = Heat input rate at the common stack or pipe, mmBtu/hr.

MW_i = Gross electrical output, MWe.

t_i = Unit operating time, hour or fraction of an hour (in equal increments that can range from one hundredth to one quarter of an hour, at the option of the owner or operator).

t_{CS} = Common stack or common pipe operating time, hour or fraction of an hour (in equal increments that can range from one hundredth to one quarter of an hour, at the option of the owner or operator).

n = Total number of units using the common stack or pipe.

i = Designation of a particular unit.

5.6.2 Where applicable, the owner or operator of an affected unit that determines the heat input rate at the unit level by apportioning the heat input rate monitored at a common stack or common pipe using steam load shall apportion the heat input rate using the following equation:

$$HI_i = HI_{CS}\left(\frac{t_{CS}}{t_i}\right)\left[\frac{SF_i t_i}{\sum_{i=1}^{n} SF_i t_i}\right] \qquad \text{(Eq. F-21b)}$$

Where:

HI_i = Heat input rate for a unit, mmBtu/hr.

HI_{CS} = Heat input rate at the common stack or pipe, mmBtu/hr.
SF = Gross steam load, lb/hr, or mmBtu/hr.
t_i = Unit operating time, hour or fraction of an hour (in equal increments that can range from one hundredth to one quarter of an hour, at the option of the owner or operator).
t_{CS} = Common stack or common pipe operating time, hour or fraction of an hour (in equal increments that can range from one hundredth to one quarter of an hour, at the option of the owner or operator).
n = Total number of units using the common stack or pipe.
i = Designation of a particular unit.

5.7 Heat Input Rate Summation for Units with Multiple Stacks or Pipes

The owner or operator of an affected unit that determines the heat input rate at the unit level by summing the heat input rates monitored at multiple stacks or multiple pipes shall sum the heat input rates using the following equation:

$$HI_{Unit} = \frac{\sum_{s=1}^{n} HI_s t_s}{t_{Unit}} \qquad \text{(Eq. F-21c)}$$

Where:

HI_{Unit} = Heat input rate for a unit, mmBtu/hr.
HI_s = Heat input rate for the individual stack, duct, or pipe, mmBtu/hr.
t_{Unit} = Unit operating time, hour or fraction of the hour (in equal increments that can range from one hundredth to one quarter of an hour, at the option of the owner or operator).
t_s = Operating time for the individual stack or pipe, hour or fraction of the hour (in equal increments that can range from one hundredth to one quarter of an hour, at the option of the owner or operator).
s = Designation for a particular stack, duct, or pipe.

5.8 Alternate Heat Input Apportionment for Common Pipes

As an alternative to using Equation F–21a or F–21b in section 5.6 of this appendix, the owner or operator may apportion the heat input rate at a common pipe to the individual units served by the common pipe based on the fuel flow rate to the individual units, as measured by uncertified fuel flowmeters. This option may only be used if a fuel flowmeter system that meets the requirements of appendix D to this part is installed on the common pipe. If this option is used, determine the unit heat input rates using the following equation:

$$HI_i = HI_{CP}\left(\frac{t_{CP}}{t_i}\right)\left[\frac{FF_i t_i}{\sum_{i=1}^{n} FF_i t_i}\right] \qquad \text{(Eq. F-21d)}$$

Where:

HI_i = Heat input rate for a unit, mmBtu/hr.
HI_{CP} = Heat input rate at the common pipe, mmBtu/hr.
FF_i = Fuel flow rate to a unit, gal/min, 100 scfh, or other appropriate units.
t_i = Unit operating time, hour or fraction of an hour (in equal increments that can range from one hundredth to one quarter of an hour, at the option of the owner or operator).
t_{CP} = Common pipe operating time, hour or fraction of an hour (in equal increments that can range from one hundredth to one quarter of an hour, at the option of the owner or operator).
n = Total number of units using the common pipe.
i = Designation of a particular unit.

6. Procedure for Converting Volumetric Flow to STP

Use the following equation to convert volumetric flow at actual temperature and pressure to standard temperature and pressure.

$F_{STP} = F_{Actual}(T_{Std}/T_{Stack})(P_{Stack}/P_{Std})$

where:

F_{STP} = Flue gas volumetric flow rate at standard temperature and pressure, scfh.
F_{Actual} = Flue gas volumetric flow rate at actual temperature and pressure, acfh.
T_{Std} = Standard temperature=528 °R.
T_{Stack} = Flue gas temperature at flow monitor location, °R, where °R=460+ °F.
P_{Stack} = The absolute flue gas pressure=barometric pressure at the flow monitor location + flue gas static pressure, inches of mercury.

P_{Std} = Standard pressure = 29.92 inches of mercury.

7. PROCEDURES FOR SO_2 MASS EMISSIONS, USING DEFAULT SO_2 EMISSION RATES AND HEAT INPUT MEASURED BY CEMS

The owner or operator shall use Equation F–23 to calculate hourly SO_2 mass emissions in accordance with §75.11(e)(1) during the combustion of gaseous fuel, for a unit that uses a flow monitor and a diluent gas monitor to measure heat input, and that qualifies to use a default SO_2 emission rate under section 2.3.1.1, 2.3.2.1.1, or 2.3.6(b) of appendix D to this part. Equation F–23 may also be applied to the combustion of solid or liquid fuel that meets the definition of very low sulfur fuel in §72.2 of this chapter, combinations of such fuels, or mixtures of such fuels with gaseous fuel, if the owner or operator has received approval from the Administrator under §75.66 to use a site-specific default SO_2 emission rate for the fuel or mixture of fuels.

$$E_h = (ER)(HI) \qquad \text{(Eq. F-23)}$$

Where:

E_h = Hourly SO_2 mass emission rate, lb/hr.

ER = Applicable SO_2 default emission rate for gaseous fuel combustion, from section 2.3.1.1, 2.3.2.1.1, or 2.3.6(b) of appendix D to this part, or other default SO_2 emission rate for the combustion of very low sulfur liquid or solid fuel, combinations of such fuels, or mixtures of such fuels with gaseous fuel, as approved by the Administrator under §75.66, lb/mmBtu.

HI = Hourly heat input rate, determined using the procedures in section 5.2 of this appendix, mmBtu/hr.

8. PROCEDURES FOR NO_X *Mass Emissions*

The owner or operator of a unit that is required to monitor, record, and report NO_X mass emissions under a State or federal NO_X mass emission reduction program must use the procedures in section 8.1, 8.2, or 8.3 of this appendix, as applicable, to account for hourly NO_X mass emissions, and the procedures in section 8.4 of this appendix to account for quarterly, seasonal, and annual NO_X mass emissions to the extent that the provisions of subpart H of this part are adopted as requirements under such a program.

8.1 The own or operator may use the hourly NO_X emission rate and the hourly heat input rate to calculate the NO_X mass emissions in pounds or the NO_X mass emission rate in pounds per hour, (as required by the applicable reporting format), for each unit or stack operating hour, as follows:

8.1.1 If both NO_X emission rate and heat input rate are monitored at the same unit or stack level (e.g., the NO_X emission rate value and the heat input rate value both represent all of the units exhausting to the common stack), then (as required by the applicable reporting format) either:

(a) Use Equation F–24 to calculate the hourly NO_X mass emissions (lb).

$$M_{(NO_X)_h} = ER_{(NO_X)_h} HI_h t_h \qquad \text{(Eq. F-24)}$$

Where:

$M_{(NO_X)_h}$ = NO_X mass emissions in lbs for the hour.

$ER_{(NO_X)_h}$ = Hourly average NO_X emission rate for hour h, lb/mmBtu, from section 3 of this appendix, from Method 19 in appendix A–7 to part 60 of this chapter, or from section 3.3 of appendix E to this part. (Include bias-adjusted NO_X emission rate values, where the bias-test procedures in appendix A to this part shows a bias-adjustment factor is necessary.)

HI_h = Hourly average heat input rate for hour h, mmBtu/hr. (Include bias-adjusted flow rate values, where the bias-test procedures in appendix A to this part shows a bias-adjustment factor is necessary.)

t_h = Monitoring location operating time for hour h, in hours or fraction of an hour (in equal increments that can range from one hundredth to one quarter of an hour, at the option of the owner or operator). If the combined NO_X emission rate and heat input are monitored for all of the units in a common stack, the monitoring location operating time is equal to the total time when any of those units was exhausting through the common stack; or

(b) Use Equation F–24a to calculate the hourly NO_X mass emission rate (lb/hr).

$$E_{(NO_X)_h} = ER_{(NO_x)_h} HI_h \qquad \text{(Eq. F-24a)}$$

Where:

$E_{(NO_X)_h}$ = NO_X mass emissions rate in lbs/hr for the hour.

$ER_{(NO_X)_h}$ = Hourly average NO_X emission rate for hour h, lb/mmBtu, from section 3 of this appendix, from Method 19 in appendix A–7 to part 60 of this chapter, or from section 3.3 of appendix E to this part. (Include bias-adjusted NO_X emission rate values, where the bias-test procedures in appendix A to this part shows a bias-adjustment factor is necessary.)

HI_h = Hourly average heat input rate for hour h, mmBtu/hr. (Include bias-adjusted flow rate values, where the bias-test procedures in appendix A to this part shows a bias-adjustment factor is necessary.)

8.1.2 If NO_X emission rate is measured at a common stack and heat input is measured at the unit level, sum the hourly heat inputs at the unit level according to the following formula:

$$HI_{CS} = \frac{\sum_{u=1}^{p} HI_u t_u}{t_{CS}} \qquad \text{(Eq. F-25)}$$

where:

HI_{CS} = Hourly average heat input rate for hour h for the units at the common stack, mmBtu/hr.

t_{CS} = Common stack operating time for hour h, in hours or fraction of an hour (in equal increments that can range from one hundredth to one quarter of an hour, at the option of the owner or operator). (For each hour, t_{cs} is the total time during which one or more of the units which exhaust through the common stack operate.).

HI_u = Hourly average heat input rate for hour h for the unit, mmBtu/hr.

t_u = Unit operating time for hour h, in hours or fraction of an hour (in equal increments that can range from one hundredth to one quarter of an hour, at the option of the owner or operator).

p = Number of units that exhaust through the common stack.

u = Designation of a particular unit.

Use the hourly heat input rate at the common stack level and the hourly average NO_X emission rate at the common stack level and the procedures in section 8.1.1 of this appendix to determine the hourly NO_X mass emissions at the common stack.

8.1.3 If a unit has multiple ducts and NO_X emission rate is only measured at one duct, use the NO_X emission rate measured at the duct, the heat input measured for the unit, and the procedures in section 8.1.1 of this appendix to determine NO_X mass emissions.

8.1.4 If a unit has multiple ducts and NO_X emission rate is measured in each duct, heat input shall also be measured in each duct and the procedures in section 8.1.1 of this appendix shall be used to determine NO_X mass emissions.

8.2 Alternatively, the owner or operator may use the hourly NO_X concentration (as measured by a NO_X concentration monitoring system) and the hourly stack gas volumetric flow rate to calculate the NO_X mass emission rate (lb/hr) for each unit or stack operating hour, in accordance with section 8.2.1 or 8.2.2 of this appendix (as applicable). If the hourly NO_X mass emissions are to be reported in lb, Equation F–26c in section 8.3 of this appendix shall be used to convert the hourly NO_X mass emission rates to hourly NO_X mass emissions (lb).

8.2.1 When the NO_X concentration monitoring system measures on a wet basis, first calculate the hourly NO_X mass emission rate (in lb/hr) during unit (or stack) operation, using Equation F–26a. (Include bias-adjusted flow rate or NO_X concentration values, where the bias-test procedures in appendix A to this part shows a bias-adjustment factor is necessary.)

$$E_{(NO_X)_h} = K\ C_{hw} Q_h \qquad \text{(Eq. F-26a)}$$

Where:

$E_{(NO_X)_h}$ = NO_X mass emissions rate in lb/hr.

K = 1.194 x 10^{-7} for NO_X, (lb/scf)/ppm.

C_{hw} = Hourly average NO_X concentration during unit operation, wet basis, ppm.

Q_h = Hourly average volumetric flow rate during unit operation, wet basis, scfh.

8.2.2 When NO_X mass emissions are determined using a dry basis NO_X concentration monitoring system and a wet basis flow monitoring system, first calculate hourly NO_X mass emission rate (in lb/hr) during unit (or stack) operation, using Equation F–26b. (Include bias-adjusted flow rate or NO_X concentration values, where the bias-test procedures in appendix A to this part shows a bias-adjustment factor is necessary.)

$$E_{(NO_X)_h} = K\ C_{hd} Q_h \frac{(100 - \%H_2O)}{(100)} \qquad \text{(Eq. F-26b)}$$

Where:

$E_{(NO_X)_h}$ = NO_X mass emissions rate, lb/hr.

K = 1.194 x 10^{-7} for NO_X, (lb/scf)/ppm.

C_{hd} = Hourly average NO_X concentration during unit operation, dry basis, ppm.

Q_h = Hourly average volumetric flow rate during unit operation, wet basis, scfh.

$\%H_2O$ = Hourly average stack moisture content during unit operation, percent by volume.

8.3 When hourly NO_X mass emissions are reported in pounds and are determined using a NO_X concentration monitoring system and a flow monitoring system, calculate NO_X mass emissions (lb) for each unit or stack operating hour by multiplying the hourly NO_X mass emission rate (lb/hr) by the unit operating time for the hour, as follows:

$$M_{(NO_X)_h} = E_h t_h \qquad \text{(Eq. F-26c)}$$

Where:

$M_{(NO_X)_h}$ = NO_X mass emissions for the hour, lb.

E_h = Hourly NO_X mass emission rate during unit (or stack) operation from Equation F–26a in section 8.2.1 of this appendix or Equation F–26b in section 8.2.2 of this appendix (as applicable), lb/hr.

t_h = Unit operating time or stack operating time (as defined in § 72.2 of this chapter) for hour ''h'', in hours or fraction of an hour (in equal increments that can range from one hundredth to one quarter of an hour, at the option of the owner or operator).

8.4 Use the following procedures to calculate quarterly, cumulative ozone season, and cumulative yearly NO_X mass emissions, in tons:

(a) When hourly NO_X mass emissions are reported in lb., use Eq. F–27.

$$M_{(NO_X)_{time\ period}} = \frac{\sum_{h=1}^{p} M(NO_X)_h}{2000} \qquad \text{(Eq. F-27)}$$

Where:

$M_{(NO_X)_{time\ period}}$ = NO_X mass emissions in tons for the given time period (quarter, cumulative ozone season, cumulative year-to-date).

$M_{(NO_X)_h}$ = NO_X mass emissions in lb for the hour.

p = The number of hours in the given time period (quarter, cumulative ozone season, cumulative year-to-date).

(b) When hourly NO_X mass emission rate is reported in lb/hr, use Eq. F–27a.

$$M_{(NO_X)_{time\ period}} = \frac{\sum_{h=1}^{p} E_{(NO_X)_h} t_h}{2000} \qquad \text{(Eq. F-27a)}$$

Where:

$M_{(NO_X)_{time\ period}}$ = NO_X mass emissions in tons for the given time period (quarter, cumulative ozone season, cumulative year-to-date).

$E_{(NO_X)_h}$ = NO_X mass emission rate in lb/hr for the hour.

p = The number of hours in the given time period (quarter, cumulative ozone season, cumulative year-to-date).

t_h = Monitoring location operating time for hour h, in hours or fraction of an hour (in equal increments that can range from one hundredth to one quarter of an hour, at the option of the owner or operator).

8.5 Specific provisions for monitoring NO_X mass emissions from common stacks. The owner or operator of a unit utilizing a common stack may account for NO_X mass emissions using either of the following methodologies, if the provisions of subpart H are adopted as requirements of a State or federal NO_X mass reduction program:

8.5.1 The owner or operator may determine both NO_X emission rate and heat input at the common stack and use the procedures in section 8.1.1 of this appendix to determine hourly NO_X mass emissions at the common stack.

8.5.2 The owner or operator may determine the NO_X emission rate at the common stack and the heat input at each of the units and use the procedures in section 8.1.2 of this appendix to determine the hourly NO_X mass emissions at each unit.

9. PROCEDURES FOR HG MASS EMISSIONS.

9.1 Use the procedures in this section to calculate the hourly Hg mass emissions (in ounces) at each monitored location, for the affected unit or group of units that discharge through a common stack.

9.1.1 To determine the hourly Hg mass emissions when using a Hg concentration monitoring system that measures on a wet basis and a flow monitor, use the following equation:

$$M_h = K\, C_h\, Q_h\, t_h \qquad \text{(Eq. F-28)}$$

Where:

M_h = Hg mass emissions for the hour, rounded off to three decimal places, (ounces).

K = Units conversion constant, 9.978×10^{-10} oz-scm/μgm-scf

C_h = Hourly Hg concentration, wet basis, adjusted for bias if the bias-test procedures in appendix A to this part show that a bias-adjustment factor is necessary, (μgm/wscm).

Q_h = Hourly stack gas volumetric flow rate, adjusted for bias, where the bias-test procedures in appendix A to this part shows a bias-adjustment factor is necessary, (scfh)

t_h = Unit or stack operating time, as defined in §72.2, (hr)

9.1.2 To determine the hourly Hg mass emissions when using a Hg concentration monitoring system that measures on a dry basis or a sorbent trap monitoring system and a flow monitor, use the following equation:

$$M_h = K\, C_h\, Q_h\, t_h\, (1 - B_{ws}) \qquad \text{(Eq. F-29)}$$

Where:

M_h = Hg mass emissions for the hour, rounded off to three decimal places, (ounces).

K = Units conversion constant, 9.978×10^{-10} oz-scm/µgm-scf

C_h = Hourly Hg concentration, dry basis, adjusted for bias if the bias-test procedures in appendix A to this part show that a bias-adjustment factor is necessary, (µgm/dscm). For sorbent trap systems, a single value of C_h (*i.e.*, a flow-proportional average concentration for the data collection period), is applied to each hour in the data collection period, for a particular pair of traps.

Q_h = Hourly stack gas volumetric flow rate, adjusted for bias, where the bias-test procedures in appendix A to this part shows a bias-adjustment factor is necessary, (scfh)

B_{ws} = Moisture fraction of the stack gas, expressed as a decimal (equal to % H_2O 100)

t_h = Unit or stack operating time, as defined in §72.2, (hr)

9.1.3 For units that are demonstrated under §75.81(d) to emit less than 464 ounces of Hg per year, and for which the owner or operator elects not to continuously monitor the Hg concentration, calculate the hourly Hg mass emissions using Equation F–28 in section 9.1.1 of this appendix, except that ''C_h'' shall be the applicable default Hg concentration from §75.81(c), (d), or (e), expressed in µgm/scm. Correction for the stack gas moisture content is not required when this methodology is used.

9.2 Use the following equation to calculate quarterly and year-to-date Hg mass emissions in ounces:

$$M_{\text{time period}} = \sum_{h=1}^{n} M_h \qquad \text{(Eq. F-30)}$$

Where:

$M_{\text{time period}}$ = Hg mass emissions for the given time period *i.e.*, quarter or year-to-date, rounded to the nearest thousandth, (ounces).

M_h = Hg mass emissions for the hour, rounded to three decimal places, (ounces).

n = The number of hours in the given time period (quarter or year-to-date).

9.3 If heat input rate monitoring is required, follow the applicable procedures for heat input apportionment and summation in sections 5.3, 5.6 and 5.7 of this appendix.

10. Moisture Determination From Wet and Dry O_2 Readings

If a correction for the stack gas moisture content is required in any of the emissions or heat input calculations described in this appendix, and if the hourly moisture content is determined from wet- and dry-basis O_2 readings, use Equation F–31 to calculate the percent moisture, unless a ''K'' factor or other mathematical algorithm is developed as described in section 6.5.7(a) of appendix A to this part:

$$\%H_2O = \frac{(O_{2d} - O_{2w})}{O_{2d}} \times 100 \qquad \text{(Eq. F-31)}$$

Where:

% H_2O = Hourly average stack gas moisture content, percent H_2O

O_{2d} = Dry-basis hourly average oxygen concentration, percent O_2

O_{2w} = Wet-basis hourly average oxygen concentration, percent O_2

[58 FR 3701, Jan. 11, 1993; Redesignated and amended at 60 FR 26553-26556, 26571, May 17, 1995; 61 FR 25585, May 22, 1996; 61 FR 59166, Nov. 20, 1996; 63 FR 57513, Oct. 27, 1998; 64 FR 28666–28671, May 26, 1999; 64 FR 37582, July 12, 1999; 67 FR 40474, 40475, June 12, 2002; 67 FR 53505, Aug. 16, 2002; 70 FR 28695, May 18, 2005; 73 FR 4372, Jan. 24, 2008]

APPENDIX G TO PART 75—DETERMINATION OF CO_2 EMISSIONS

1. APPLICABILITY

The procedures in this appendix may be used to estimate CO_2 mass emissions discharged to the atmosphere (in tons/day) as the sum of CO_2 emissions from combustion and, if applicable, CO_2 emissions from sorbent used in a wet flue gas desulfurization control system, fluidized bed boiler, or other emission controls.

2. PROCEDURES FOR ESTIMATING CO_2 EMISSIONS FROM COMBUSTION

Use the following procedures to estimate daily CO_2 mass emissions from the combustion of fossil fuels. The optional procedure in section 2.3 of this appendix may also be used for an affected gas-fired unit. For an affected unit that combusts any nonfossil fuels (e.g., bark, wood, residue, or refuse), either use a CO_2 continuous emission monitoring system or apply to the Administrator for approval of a unit-specific method for determining CO_2 emissions.

2.1 Use the following equation to calculate daily CO_2 mass emissions (in tons/day) from the combustion of fossil fuels. Where fuel flow is measured in a common pipe header (i.e., a pipe carrying fuel for multiple units), the owner or operator may use the procedures in section 2.1.2 of appendix D of this part for combining or apportioning emissions, except that the term ''SO_2 mass emissions'' is replaced with the term ''CO_2 mass emissions.''

$$W_{CO_2} = \frac{\left(MW_C + MW_{O_2}\right) \times W_C}{2{,}000\, MW_C} \quad \text{(Eq. G–1)}$$

Where:

Wco2=CO_2 emitted from combustion, tons/day.

MW_c=Molecular weight of carbon (12.0).

MW_{o2}=Molecular weight of oxygen (32.0)

W_c = Carbon burned, lb/day, determined using fuel sampling and analysis and fuel feed rates.

2.1.1 Collect at least one fuel sample during each week that the unit combusts coal, one sample per each shipment or delivery for oil and diesel fuel, one fuel sample for each delivery for gaseous fuel in lots, one sample per day or per hour (as applicable) for each gaseous fuel that is required to be sampled daily or hourly for gross calorific value under section 2.3.5.6 of appendix D to this part, and one sample per month for each gaseous fuel that is required to be sampled monthly for gross calorific value under section 2.3.4.1 or 2.3.4.2 of appendix D to this part. Collect coal samples from a location in the fuel handling system that provides a sample representative of the fuel bunkered or consumed during the week.

2.1.2 Determine the carbon content of each fuel sample using one of the following methods: ASTM D3178–89 (Reapproved 2002) or ASTM D5373–02 (Reapproved 2007) for coal; ASTM D5291–02, Standard Test Methods for Instrumental Determination of Carbon, Hydrogen, and Nitrogen in Petroleum Products and Lubricants, ultimate analysis of oil, or computations based upon ASTM D3238–95 (Reapproved 2000) and either ASTM D2502–92 (Reapproved 1996) or ASTM D2503–92 (Reapproved 1997) for oil; and computations based on ASTM D1945–96 (Reapproved 2001) or ASTM D1946–90 (Reapproved 2006) for gas (all incorporated by reference under §75.6 of this part).

2.1.3 Use daily fuel feed rates from company records for all fuels and the carbon content of the most recent fuel sample under this section to determine tons of carbon per day from combustion of each fuel. (All ASTM methods are incorporated by reference under §75.6.) Where more than one fuel is combusted during a calendar day, calculate total tons of carbon for the day from all fuels.

2.2 For an affected coal-fired unit, the estimate of daily CO_2 mass emissions given by equation G–1 may be adjusted to account for carbon retained in the ash using the procedures in either section 2.2.1 through 2.2.3 or section 2.2.4 of this appendix.

2.2.1 Determine the ash content of the weekly sample of coal using ASTM D3174–00, ''Standard Test Method for Ash in the Analysis Sample of Coal and Coke from Coal'' (incorporated by reference under §75.6 of this part).

2.2.2 Sample and analyze the carbon content of the fly-ash according to ASTM D5373–02 (Reapproved 2007), Standard Test Methods for Instrumental Determination of Carbon, Hydrogen, and Nitrogen in Laboratory Samples of Coal and Coke'' (incorporated by reference under §75.6 of this part).

2.2.3 Discount the estimate of daily CO_2 mass emissions from the combustion of coal given by equation G–1 by the percent carbon retained in the ash using the following equation:

$$W_{NCO2} = W_{CO2} - \left(\frac{MW_{CO2}}{MW_c}\right)\left(\frac{A\%}{100}\right)\left(\frac{C\%}{100}\right)W_{COAL}$$

(Eq. G–2)

where,

W_{NCO2} = Net CO_2 mass emissions discharged to the atmosphere, tons/day.

W_{CO2} = Daily CO_2 mass emissions calculated by equation G–1, tons/day.

MW_{C02} = Molecular weight of carbon dioxide (44.0).

MW_c = Molecular weight of carbon (12.0).

A% = Ash content of the coal sample, percent by weight.

C% = Carbon content of ash, percent by weight.

W_{COAL} = Feed rate of coal from company records, tons/day.

2.2.4 The daily CO_2 mass emissions from combusting coal may be adjusted to account for carbon retained in the ash using the following equation:

$W_{NCO2} = .99\ W_{CO2}$

(Eq. G–3)

where,

W_{NCO2} = Net CO_2 mass emissions from the combustion of coal discharged to the atmosphere, tons/day.

.99 = Average fraction of coal converted into CO_2 upon combustion.

W_{CO2} = Daily CO_2 mass emissions from the combustion of coal calculated by equation G–1, tons/day.

2.3 In lieu of using the procedures, methods, and equations in section 2.1 of this appendix, the owner or operator of an affected gas-fired or oil-fired unit (as defined under §72.2 of this chapter) may use the following equation and records of hourly heat input to estimate hourly CO_2 mass emissions (in tons).

$$W_{CO_2} = \left(\frac{F_C \times H \times U_f \times MW_{CO_2}}{2000} \right) \qquad \text{(Eq. G–4)}$$

(Eq. G–4)

Where:

WCO_2 = CO_2 emitted from combustion, tons/hr.

MW CO_2 = Molecular weight of carbon dioxide, 44.0 lb/lb-mole.

F_c = Carbon based F-factor, 1040 scf/mmBtu for natural gas; 1,420 scf/mmBtu for crude, residual, or distillate oil; and calculated according to the procedures in section 3.3.5 of appendix F to this part for other gaseous fuels.

H = Hourly heat input in mmBtu, as calculated using the procedures in section 5 of appendix F of this part.

Uf = 1/385 scf CO2/lb-mole at 14.7 psia and 68 °F.

3. Procedures for Estimating CO_2 Emissions From Sorbent

When the affected unit has a wet flue gas desulfurization system, is a fluidized bed boiler, or uses other emission controls with sorbent injection, use either a CO_2 continuous emission monitoring system or an O_2 monitor and a flow monitor, or use the procedures, methods, and equations in sections 3.1 through 3.2 of this appendix to determine daily CO_2 mass emissions from the sorbent (in tons).

3.1 When limestone is the sorbent material, use the equations and procedures in either section 3.1.1 or 3.1.2 of this appendix.

3.1.1 Use the following equation to estimate daily CO_2 mass emissions from sorbent (in tons).

$$SE_{CO_2} = W_{CaCO_3}\ F_u\ \frac{MW_{CO_2}}{MW_{CaCO_3}}$$

(Eq. G–5)

where,

SE_{CO2} = CO_2 emitted from sorbent, tons/day.

W_{CaCO3} = $CaCO_3$ used, tons/day.

F_u = 1.00, the calcium to sulfur stoichiometric ratio.

MW_{CO2} = Molecular weight of carbon dioxide (44).

MW_{CaCO3} = Molecular weight of calcium carbonate (100).

3.1.2 In lieu of using Equation G–5, any owner or operator who operates and maintains a certified SO_2-diluent continuous emission monitoring system (consisting of an SO_2 pollutant concentration monitor and an O_2 or CO_2 diluent gas monitor), for measuring and recording SO_2 emission rate (in lb/mmBtu) at the outlet to the emission controls and who uses the applicable procedures, methods, and equations such as those in EPA Method 19 in appendix A to part 60 of this chapter to estimate the SO_2 emissions removal efficiency of the emission controls, may use the following equations to estimate daily CO_2 mass emissions from sorbent (in tons).

$$SE_{CO_2} = F_u\ \frac{W_{SO_2}}{2000}\ \frac{MW_{CO_2}}{MW_{SO_2}}$$

(Eq. G–6)

where,

SE_{CO2}=CO_2 emitted from sorbent, tons/day.

MW_{CO2}=Molecular weight of carbon dioxide (44).

MW_{SO2}=Molecular weight of sulfur dioxide (64).

W_{SO2}=Sulfur dioxide removed, lb/day, as calculated below using Eq. G–7.

F_u=1.0, the calcium to sulfur stoichiometric ratio.

and

$$W_{SO_2} = SO_{2o} \frac{\%R}{(100 - \%R)} \qquad \text{(Eq. G–7)}$$

(Eq. G–7)

where:

WSO_2 = Weight of sulfur dioxide removed, lb/day.

SO_{2o} = SO_2 mass emissions monitored at the outlet, lb/day, as calculated using the equations and procedures in section 2 of appendix F of this part.

%R = Overall percentage SO_2 emissions removal efficiency, calculated using equations such as those in EPA Method 19 in appendix A to part 60 of this chapter, and using daily instead of annual average emission rates.

3.2 When a sorbent material other than limestone is used, modify the equations, methods, and procedures in section 3.1 of this appendix as follows to estimate daily CO_2 mass emissions from sorbent (in tons).

3.2.1 Determine a site-specific value for F_u, defined as the ratio of the number of moles of CO_2 released upon capture of one mole of SO_2, using methods and procedures satisfactory to the Administrator. Use this value of F_u (instead of 1.0) in either equation G–5 or equation G–6.

3.2.2 When using equation G–5, replace MW_{CaCO3}, the molecular weight of calcium carbonate, with the molecular weight of the sorbent material that participates in the reaction to capture SO_2 and that releases CO_2, and replace W_{CaCO3}, the amount of calcium carbonate used (in tons/day), with the amount of sorbent material used (in tons/day).

4. Procedures for Estimating Total CO_2 Emissions

When the affected unit has a wet flue gas desulfurization system, is a fluidized bed boiler, or uses other emission controls with sorbent injection, use the following equation to obtain total daily CO_2 mass emissions (in tons) as the sum of combustion-related emissions and sorbent-related emissions.

$$W_t = W_{CO2} + SE_{CO2}$$

(Eq. G–8)

where,

W_t = Estimated total CO_2 mass emissions, tons/day.

W_{CO2} = CO_2 emitted from fuel combustion, tons/day.

SE_{CO2} = CO_2 emitted from sorbent, tons/day.

5. Missing Data Substitution Procedures for Fuel Analytical Data

Use the following procedures to substitute for missing fuel analytical data used to calculate CO_2 mass emissions under this appendix.

5.1–5.1.2 [Reserved]

5.2 Missing Carbon Content Data

Use the following procedures to substitute for missing carbon content data.

5.2.1 In all cases (i.e., for weekly coal samples or composite oil samples from continuous sampling, for oil samples taken from the storage tank after transfer of a new delivery of fuel, for as-delivered samples of oil, diesel fuel, or gaseous fuel delivered in lots, and for gaseous fuel that is supplied by a pipeline and sampled monthly, daily or hourly for gross calorific value) when carbon content data is missing, report the appropriate default value from Table G–1.

5.2.2 The missing data values in Table G–1 shall be reported whenever the results of a required sample of fuel carbon content are either missing or invalid. The substitute data value shall be used until the next valid carbon content sample is obtained.

TABLE G-1. -- MISSING DATA SUBSTITUTION PROCEDURES FOR MISSING CARBON CONTENT DATA

Parameter	Missing data value
Oil and coal carbon content	Most recent, previous carbon content value available for that type of coal, grade of oil, or default value, in this table
Gas carbon content	Most recent, previous carbon content value available for that type of gaseous fuel, or default value, in this table
Default coal carbon content	Anthracite: 90.0 percent
	Bituminous: 85.0 percent
	Subbituminous/Lignite: 75.0 percent
Default oil carbon content	90.0 percent
Default gas carbon content	Natural gas: 75.0 percent
	Other gaseous fuels: 90.0 percent

5.3 Gross Calorific Value Data

For a gas-fired unit using the procedures of section 2.3 of this appendix to determine CO_2 emissions, substitute for missing gross calorific value data used to calculate heat input by following the missing data procedures for gross calorific value in section 2.4 of appendix D to this part.

[58 FR 3701, Jan. 11, 1993, as amended at 60 FR 26556-26557, May 17, 1995; 61 FR 25585, May 22, 1996; 64 FR 28671, May 26, 1999; 67 FR 40475, June 12, 2002; 67 FR 57274, Sept. 9, 2002; 73 FR 4376, Jan. 24, 2008]

APPENDIX H TO PART 75—REVISED TRACEABILITY PROTOCOL NO. 1 [RESERVED]

APPENDIX I TO PART 75—OPTIONAL F—FACTOR/FUEL FLOW METHOD [RESERVED]

APPENDIX J TO PART 75—COMPLIANCE DATES FOR REVISED RECORDKEEPING REQUIREMENTS AND MISSING DATA PROCEDURES [RESERVED]

APPENDIX K TO PART 75—QUALITY ASSURANCE AND OPERATING PROCEDURES FOR SORBENT TRAP MONITORING SYSTEMS

1.0 Scope and Application

This appendix specifies sampling, and analytical, and quality-assurance criteria and procedures for the performance-based monitoring of vapor-phase mercury (Hg) emissions in combustion flue gas streams, using a sorbent trap monitoring system (as defined in §72.2 of this chapter). The principle employed is continuous sampling using in-stack sorbent media coupled with analysis of the integrated samples. The performance-based approach of this appendix allows for use of various suitable sampling and analytical technologies while maintaining a specified and documented level of data quality

through performance criteria. Persons using this appendix should have a thorough working knowledge of Methods 1, 2, 3, 4 and 5 in appendices A–1 through A–3 to part 60 of this chapter, as well as the determinative technique selected for analysis.

1.1 Analytes.

The analyte measured by these procedures and specifications is total vapor-phase Hg in the flue gas, which represents the sum of elemental Hg (Hg^0, CAS Number 7439–97–6) and oxidized forms of Hg, in mass concentration units of micrograms per dry standard cubic meter (μgm/dscm).

1.2 Applicability.

These performance criteria and procedures are applicable to monitoring of vapor-phase Hg emissions under relatively low-dust conditions (*i.e.*, sampling in the stack after all pollution control devices), from coal-fired electric utility steam generators which are subject to subpart I of this part. Individual sample collection times can range from 30 minutes to several days in duration, depending on the Hg concentration in the stack. The monitoring system must achieve the performance criteria specified in Section 8 of this appendix and the sorbent media capture ability must not be exceeded. The sampling rate must be maintained at a constant proportion to the total stack flowrate to ensure representativeness of the sample collected. Failure to achieve certain performance criteria will result in invalid Hg emissions monitoring data.

2.0 Principle.

Known volumes of flue gas are extracted from a stack or duct through paired, in-stack, pre-spiked sorbent media traps at an appropriate nominal flow rate. Collection of Hg on the sorbent media in the stack mitigates potential loss of Hg during transport through a probe/sample line. Paired train sampling is required to determine measurement precision and verify acceptability of the measured emissions data.

The sorbent traps are recovered from the sampling system, prepared for analysis, as needed, and analyzed by any suitable determinative technique that can meet the performance criteria. A section of each sorbent trap is spiked with Hg^0 prior to sampling. This section is analyzed separately and the recovery value is used to correct the individual Hg sample for measurement bias.

3.0 Clean Handling and Contamination.

To avoid Hg contamination of the samples, special attention should be paid to cleanliness during transport, field handling, sampling, recovery, and laboratory analysis, as well as during preparation of the sorbent cartridges. Collection and analysis of blank samples (field, trip, lab) is useful in verifying the absence of contaminant Hg.

4.0 Safety.

4.1 Site hazards.

Site hazards must be thoroughly considered in advance of applying these procedures/specifications in the field; advance coordination with the site is critical to understand the conditions and applicable safety policies. At a minimum, portions of the sampling system will be hot, requiring appropriate gloves, long sleeves, and caution in handling this equipment.

4.2 Laboratory safety policies.

Laboratory safety policies should be in place to minimize risk of chemical exposure and to properly handle waste disposal. Personnel shall wear appropriate laboratory attire according to a Chemical Hygiene Plan established by the laboratory.

4.3 Toxicity or carcinogenicity.

The toxicity or carcinogenicity of any reagents used must be considered. Depending upon the sampling and analytical technologies selected, this measurement may involve hazardous materials, operations, and equipment and this appendix does not address all of the safety problems associated with implementing this approach. It is the responsibility of the user to establish appropriate safety and health practices and determine the applicable regulatory limitations prior to performance. Any chemical should be regarded as a potential health hazard and exposure to these compounds should be minimized. Chemists should refer to the Material Safety Data Sheet (MSDS) for each chemical used.

4.4 Wastes.

Any wastes generated by this procedure must be disposed of according to a hazardous materials management plan that details and tracks various waste streams and disposal procedures.

5.0 Equipment and Supplies.

The following list is presented as an example of key equipment and supplies likely required to perform vapor-phase Hg monitoring using a sorbent trap monitoring system. It is recognized that additional equipment and supplies may be needed. Collection of paired samples is required. Also required are a certified stack gas volumetric flow monitor that meets the requirements of §75.10 and an acceptable means of correcting for the stack gas moisture content, *i.e.*, either by using data from a certified continuous moisture monitoring system or by using an approved default moisture value (see §§75.11(b)).

5.1 Sorbent Trap Monitoring System.

A typical sorbent trap monitoring system is shown in Figure K–1. The monitoring system shall include the following components:

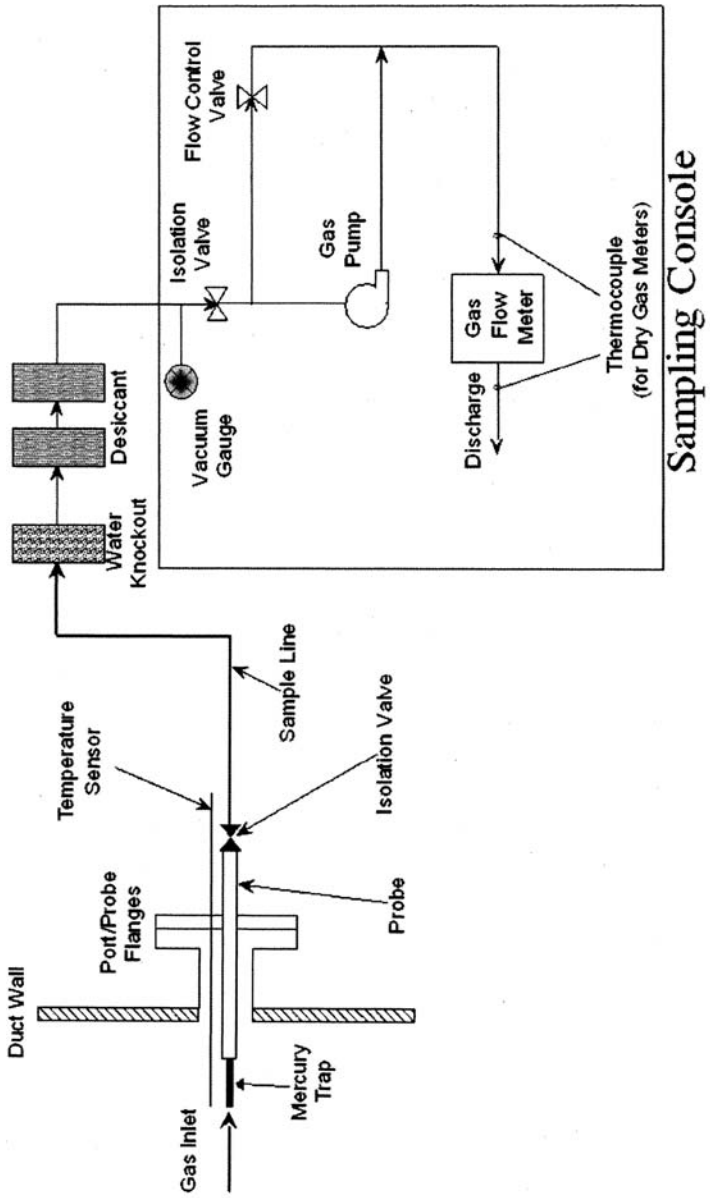

Figure K-1. Typical Sorbent Trap Monitoring System

5.1.1 Sorbent Traps.

The sorbent media used to collect Hg must be configured in a trap with three distinct and identical segments or sections, connected in series, that are amenable to separate analyses. Section 1 is designated for primary capture of gaseous Hg. Section 2 is designated as a backup section for determination of vapor-phase Hg breakthrough. Section 3 is designated for QA/QC purposes where this section shall be spiked with a known amount of gaseous Hg^0 prior to sampling and later analyzed to determine recovery efficiency. The sorbent media may be any collection material (*e.g.*, carbon, chemically-treated filter, etc.) capable of quantitatively capturing and recovering for subsequent analysis, all gaseous forms of Hg for the intended application. Selection of the sorbent media shall be based on the material's ability to achieve the performance criteria contained in Section 8 of this appendix as well as the sorbent's vapor-phase Hg capture efficiency for the emissions matrix and the expected sampling duration at the test site. The sorbent media must be obtained from a source that can demonstrate the quality assurance and control necessary to ensure consistent reliability. The paired sorbent traps are supported on a probe (or probes) and inserted directly into the flue gas stream.

5.1.2 Sampling Probe Assembly.

Each probe assembly shall have a leak-free attachment to the sorbent trap(s). Each sorbent trap must be mounted at the entrance of or within the probe such that the gas sampled enters the trap directly. Each probe/sorbent trap assembly must be heated to a temperature sufficient to prevent liquid condensation in the sorbent trap(s). Auxiliary heating is required only where the stack temperature is too low to prevent condensation. Use a calibrated thermocouple to monitor the stack temperature. A single probe capable of operating the paired sorbent traps may be used. Alternatively, individual probe/sorbent trap assemblies may be used, provided that the individual sorbent traps are co-located to ensure representative Hg monitoring and are sufficiently separated to prevent aerodynamic interference.

5.1.3 Moisture Removal Device

A robust moisture removal device or system, suitable for continuous duty (such as a Peltier cooler), shall be used to remove water vapor from the gas stream prior to entering the gas flow meter.

5.1.4 Vacuum Pump.

Use a leak-tight, vacuum pump capable of operating within the candidate system's flow range.

5.1.5 Gas Flow Meter

A gas flow meter (such as a dry gas meter, thermal mass flow meter, or other suitable measurement device) shall be used to determine the total sample volume on a dry basis, in units of standard cubic meters. The meter must be sufficiently accurate to measure the total sample volume to within 2 percent and must be calibrated at selected flow rates across the range of sample flow rates at which the sorbent trap monitoring system typically operates. The gas flow meter shall be equipped with any necessary auxiliary measurement devices (e.g., temperature sensors, pressure measurement devices) needed to correct the sample volume to standard conditions.

5.1.6 Sample Flow Rate Meter and Controller.

Use a flow rate indicator and controller for maintaining necessary sampling flow rates.

5.1.7 Temperature Sensor.

Same as Section 6.1.1.7 of Method 5 in appendix A–3 to part 60 of this chapter.

5.1.8 Barometer.

Same as Section 6.1.2 of Method 5 in appendix A–3 to part 60 of this chapter.

5.1.9 Data Logger (Optional).

Device for recording associated and necessary ancillary information (*e.g.*, temperatures, pressures, flow, time, etc.).

5.2 Gaseous Hg^0 Sorbent Trap Spiking System.

A known mass of gaseous Hg^0 must be spiked onto section 3 of each sorbent trap prior to sampling. Any approach capable of quantitatively delivering known masses of Hg^0 onto sorbent traps is acceptable. Several technologies or devices are available to meet this objective. Their practicality is a function of Hg mass spike levels. For low levels, NIST-certified or NIST-traceable gas generators or tanks may be suitable, but will likely require long preparation times. A more practical, alternative system, capable of delivering almost any mass required, makes use of NIST-certified or NIST-traceable Hg salt solutions (*e.g.*, $Hg(NO_3)_2$). With this system, an aliquot of known volume and concentration is added to a reaction vessel containing a reducing agent (*e.g.*, stannous chloride); the Hg salt solution is reduced to Hg^0 and purged onto section 3 of the sorbent trap using an impinger sparging system.

5.3 Sample Analysis Equipment.

Any analytical system capable of quantitatively recovering and quantifying total gaseous Hg from sorbent media is acceptable provided that the analysis can meet the performance criteria in Section 8 of this procedure. Candidate recovery techniques include

leaching, digestion, and thermal desorption. Candidate analytical techniques include ultraviolet atomic fluorescence (UV AF); ultraviolet atomic absorption (UV AA), with and without gold trapping; and in situ X-ray fluorescence (XRF) analysis.

6.0 Reagents and Standards.

Only NIST-certified or NIST-traceable calibration gas standards and reagents shall be used for the tests and procedures required under this appendix.

7.0 Sample Collection and Transport.

7.1 Pre-Test Procedures.

7.1.1 Selection of Sampling Site.

Sampling site information should be obtained in accordance with Method 1 in appendix A–1 to part 60 of this chapter. Identify a monitoring location representative of source Hg emissions. Locations shown to be free of stratification through measurement traverses for gases such as SO_2 and NO_X may be one such approach. An estimation of the expected stack Hg concentration is required to establish a target sample flow rate, total gas sample volume, and the mass of Hg^0 to be spiked onto section 3 of each sorbent trap.

7.1.2 Pre-sampling Spiking of Sorbent Traps.

Based on the estimated Hg concentration in the stack, the target sample rate and the target sampling duration, calculate the expected mass loading for section 1 of each sorbent trap (for an example calculation, see section 11.1 of this appendix). The pre-sampling spike to be added to section 3 of each sorbent trap shall be within ±50 percent of the expected section 1 mass loading. Spike section 3 of each sorbent trap at this level, as described in section 5.2 of this appendix. For each sorbent trap, keep an official record of the mass of Hg^0 added to section 3. This record shall include, at a minimum, the ID number of the trap, the date and time of the spike, the name of the analyst performing the procedure, the mass of Hg^0 added to section 3 of the trap (μgm), and the supporting calculations. This record shall be maintained in a format suitable for inspection and audit and shall be made available to the regulatory agencies upon request.

7.1.3 Pre-test Leak Check

Perform a leak check with the sorbent traps in place. Draw a vacuum in each sample train. Adjust the vacuum in the sample train to ~15″ Hg. Using the gas flow meter, determine leak rate. The leakage rate must not exceed 4 percent of the target sampling rate. Once the leak check passes this criterion, carefully release the vacuum in the sample train then seal the sorbent trap inlet until the probe is ready for insertion into the stack or duct.

7.1.4 Determination of Flue Gas Characteristics.

Determine or measure the flue gas measurement environment characteristics (gas temperature, static pressure, gas velocity, stack moisture, etc.) in order to determine ancillary requirements such as probe heating requirements (if any), initial sample rate, proportional sampling conditions, moisture management, etc.

7.2 Sample Collection.

7.2.1 Remove the plug from the end of each sorbent trap and store each plug in a clean sorbent trap storage container. Remove the stack or duct port cap and insert the probe(s). Secure the probe(s) and ensure that no leakage occurs between the duct and environment.

7.2.2 Record initial data including the sorbent trap ID, start time, starting dry gas meter readings, initial temperatures, setpoints, and any other appropriate information.

7.2.3 Flow Rate Control

Set the initial sample flow rate at the target value from section 7.1.1 of this appendix. Record the initial gas flow meter reading, stack temperature (if needed to convert to standard conditions), meter temperatures (if needed), etc. Then, for every operating hour during the sampling period, record the date and time, the sample flow rate, the gas flow meter reading, the stack temperature (if needed), the flow meter temperatures (if needed), temperatures of heated equipment such as the vacuum lines and the probes (if heated), and the sampling system vacuum readings. Also, record the stack gas flow rate, as measured by the certified flow monitor, and the ratio of the stack gas flow rate to the sample flow rate. Adjust the sampling flow rate to maintain proportional sampling, i.e., keep the ratio of the stack gas flow rate to sample flow rate constant, to within ±25 percent of the reference ratio from the first hour of the data collection period (see section 11 of this appendix). The sample flow rate through a sorbent trap monitoring system during any hour (or portion of an hour) in which the unit is not operating shall be zero.

7.2.4 Stack Gas Moisture Determination.

Determine stack gas moisture using a continuous moisture monitoring system, as described in §75.11(b). Alternatively, the owner or operator may use the appropriate fuel-specific moisture default value provided in §75.11, or a site-specific moisture default value approved by petition under §75.66.

7.2.5 Essential Operating Data

Obtain and record any essential operating data for the facility during the test period, e.g., the barometric pressure for correcting the sample volume measured by a dry gas meter to standard conditions. At the end of the data collection period, record the final gas flow meter reading and the final values of all other essential parameters.

7.2.6 Post Test Leak Check.

When sampling is completed, turn off the sample pump, remove the probe/sorbent trap from the port and carefully re-plug the end of each sorbent trap. Perform a leak check with the sorbent traps in place, at the maximum vacuum reached during the sampling period. Use the same general approach described in section 7.1.3 of this appendix. Record the leakage rate and vacuum. The leakage rate must not exceed 4 percent of the average sampling rate for the data collection period. Following the leak check, carefully release the vacuum in the sample train.

7.2.7 Sample Recovery.

Recover each sampled sorbent trap by removing it from the probe, sealing both ends. Wipe any deposited material from the outside of the sorbent trap. Place the sorbent trap into an appropriate sample storage container and store/preserve in appropriate manner.

7.2.8 Sample Preservation, Storage, and Transport.

While the performance criteria of this approach provide for verification of appropriate sample handling, it is still important that the user consider, determine, and plan for suitable sample preservation, storage, transport, and holding times for these measurements. Therefore, procedures in ASTM D6911–03 ''Standard Guide for Packaging and Shipping Environmental Samples for Laboratory Analysis'' (incorporated by reference, see §75.6) shall be followed for all samples.

7.2.9 Sample Custody.

Proper procedures and documentation for sample chain of custody are critical to ensuring data integrity. The chain of custody procedures in ASTM D4840–99 (reapproved 2004) ''Standard Guide for Sample Chain-of-Custody Procedures'' (incorporated by reference, see §75.6) shall be followed for all samples (including field samples and blanks).

8.0 Quality Assurance and Quality Control.

Table K–1 summarizes the QA/QC performance criteria that are used to validate the Hg emissions data from sorbent trap monitoring systems, including the relative accuracy test audit (RATA) requirement (see §75.20(c)(9), section 6.5.7 of appendix A to this part, and section 2.3 of appendix B to this part). Except as provided in §75.15(h) and as otherwise indicated in Table K–1, failure to achieve these performance criteria will result in invalidation of Hg emissions data.

TABLE K–1—QUALITY ASSURANCE/QUALITY CONTROL CRITERIA FOR SORBENT TRAP MONITORING SYSTEMS

QA/QC test or specification	Acceptance criteria	Frequency	Consequences if not met
Pre-test leak check	≤4% of target sampling rate	Prior to sampling	Sampling shall not commence until the leak check is passed.
Post-test leak check	≤4% of average sampling rate	After sampling	** See *Note*, below.
Ratio of stack gas flow rate to sample flow rate.	No more than 5% of the hourly ratios or 5 hourly ratios (whichever is less restrictive) may deviate from the reference ratio by more than ± 25%.	Every hour throughout data collection period	** See *Note*, below.
Sorbent trap section 2 break-through	≤5% of Section 1 Hg mass	Every sample	** See *Note*, below.
Paired sorbent trap agreement	≤10% Relative Deviation (RD) if the average concentration is > 1.0 μg/m³. ≤ 20% RD if the average concentration is ≤ 1.0 μg/m³. Results are also acceptable if absolute difference between concentrations from paired traps is ≤ 0.03 μg/m³.	Every sample	Either invalidate the data from the paired traps or report the results from the trap with the higher Hg concentration.
Spike Recovery Study	Average recovery between 85% and 115% for each of the 3 spike concentration levels.	Prior to analyzing field samples and prior to use of new sorbent media.	Field samples shall not be analyzed until the percent recovery criteria has been met
Multipoint analyzer calibration	Each analyzer reading within ± 10% of true value and $r^2 \geq 0.99$.	On the day of analysis, before analyzing any samples.	Recalibrate until successful.
Analysis of independent calibration standard	Within ± 10% of true value	Following daily calibration, prior to analyzing field samples.	Recalibrate and repeat independent standard analysis until successful.
Spike recovery from section 3 of sorbent trap	75–125% of spike amount	Every sample	** See *Note*, below.
RATA	RA ≤ 20.0% *or* Mean difference ≤ 1.0 μg/dscm for low emitters.	For initial certification and annually thereafter	Data from the system are invalidated until a RATA is passed.
Gas flow meter calibration	Calibration factor (Y) within ± 5% of average value from the most recent 3-point calibration.	At three settings prior to initial use and at least quarterly at one setting thereafter. For mass flow meters, initial calibration with stack gas is required.	Recalibrate the meter at three orifice settings to determine a new value of Y.
Temperature sensor calibration	Absolute temperature measured by sensor within ± 1.5% of a reference sensor.	Prior to initial use and at least quarterly thereafter.	Recalibrate. Sensor may not be used until specification is met.
Barometer calibration	Absolute pressure measured by instrument within ± 10 mm Hg of reading with a mercury barometer.	Prior to initial use and at least quarterly thereafter.	Recalibrate. Instrument may not be used until specification is met.

**Note: If both traps fail to meet the acceptance criteria, the data from the pair of traps are invalidated. However, if only one of the paired traps fails to meet this particular acceptance criterion and the other sample meets all of the applicable QA criteria, the results of the valid trap may be used for reporting under this part, provided that the measured Hg concentration is multiplied by a factor of 1.111. When the data from both traps are invalidated and quality-assured data from a certified backup monitoring system, reference method, or approved alternative monitoring system are unavailable, missing data substitution must be used.

9.0 Calibration and Standardization.

9.1 Only NIST-certified and NIST-traceable calibration standards (i.e., calibration gases, solutions, etc.) shall be used for the spiking and analytical procedures in this appendix.

9.2 Gas Flow Meter Calibration

9.2.1 Preliminaries. The manufacturer or supplier of the gas flow meter should perform all necessary set-up, testing, programming, etc., and should provide the end user with any necessary instructions, to ensure that the meter will give an accurate readout of dry gas volume in standard cubic meters for the particular field application.

9.2.2 Initial Calibration. Prior to its initial use, a calibration of the flow meter shall be performed. The initial calibration may be done by the manufacturer, by the equipment supplier, or by the end user. If the flow meter is volumetric in nature (e.g., a dry gas meter), the manufacturer, equipment supplier, or end user may perform a direct volumetric calibration using any gas. For a mass flow meter, the manufacturer, equipment supplier, or end user may calibrate the meter using a bottled gas mixture containing 12 ± 0.5% CO_2, 7 ± 0.5% O_2, and balance N_2, or these same gases in proportions more representative of the expected stack gas composition. Mass flow meters may also be initially calibrated on-site, using actual stack gas.

9.2.2.1 Initial Calibration Procedures. Determine an average calibration factor (Y) for the gas flow meter, by calibrating it at three sample flow rate settings covering the range of sample flow rates at which the sorbent trap monitoring system typically operates. You may either follow the procedures in section 10.3.1 of Method 5 in appendix A–3 to part 60 of this chapter or the procedures in section 16 of Method 5 in appendix A–3 to part 60 of this chapter. If a dry gas meter is being calibrated, use at least five revolutions of the meter at each flow rate.

9.2.2.2 Alternative Initial Calibration Procedures. Alternatively, you may perform the initial calibration of the gas flow meter using a reference gas flow meter (RGFM). The RGFM may either be: (1) A wet test meter calibrated according to section 10.3.1 of Method 5 in appendix A–3 to part 60; (2) a gas flow metering device calibrated at multiple flow rates using the procedures in section 16 of Method 5 in appendix A–3 to part 60; or (3) a NIST–traceable calibration device capable of measuring volumetric flow to an accuracy of 1 percent. To calibrate the gas flow meter using the RGFM, proceed as follows: While the sorbent trap monitoring system is sampling the actual stack gas or a compressed gas mixture that simulates the stack gas composition (as applicable), connect the RGFM to the discharge of the system. Care should be taken to minimize the dead volume between the sample flow meter being tested and the RGFM. Concurrently measure dry gas volume with the RGFM and the flow meter being calibrated the for a minimum of 10 minutes at each of three flow rates covering the typical range of operation of the sorbent trap monitoring system. For each 10-minute (or longer) data collection period, record the total sample volume, in units of dry standard cubic meters (dscm), measured by the RGFM and the gas flow meter being tested.

9.2.2.3 Initial Calibration Factor. Calculate an individual calibration factor Y_i at each tested flow rate from section 9.2.2.1 or 9.2.2.2 of this appendix (as applicable), by taking the ratio of the reference sample volume to the sample volume recorded by the gas flow meter. Average the three Y_i values, to determine Y, the calibration factor for the flow meter. Each of the three individual values of Y_i must be within ±0.02 of Y. Except as otherwise provided in sections 9.2.2.4 and 9.2.2.5 of this appendix, use the average Y value from the three level calibration to adjust all subsequent gas volume measurements made with the gas flow meter.

9.2.2.4 Initial On-Site Calibration Check. For a mass flow meter that was initially calibrated using a compressed gas mixture, an on-site calibration check shall be performed before using the flow meter to provide data for this part. While sampling stack gas, check the calibration of the flow meter at one intermediate flow rate typical of normal operation of the monitoring system. Follow the basic procedures in section 9.2.2.1 or 9.2.2.2 of this appendix. If the on-site calibration check shows that the value of Y_i, the calibration factor at the tested flow rate, differs by more than 5 percent from the value of Y obtained in the initial calibration of the meter, repeat the full 3-level calibration of the meter using stack gas to determine a new value of Y, and apply the new Y value to all subsequent gas volume measurements made with the gas flow meter.

9.2.2.5 Ongoing Quality Assurance. Recalibrate the gas flow meter quarterly at one intermediate flow rate setting representative of normal operation of the monitoring system. Follow the basic procedures in section 9.2.2.1 or 9.2.2.2 of this appendix. If a quarterly recalibration shows that the value of Y_i, the calibration factor at the tested flow rate, differs from the current value of Y by more than 5 percent, repeat the full 3-level calibration of the meter to determine a new value of Y, and apply the new Y value to all subsequent gas volume measurements made with the gas flow meter.

9.3 Thermocouples and Other Temperature Sensors.

Use the procedures and criteria in Section 10.3 of Method 2 in appendix A–1 to part 60 of

this chapter to calibrate in-stack temperature sensors and thermocouples. Dial thermometers shall be calibrated against mercury-in-glass thermometers. Calibrations must be performed prior to initial use and at least quarterly thereafter. At each calibration point, the absolute temperature measured by the temperature sensor must agree to within ±1.5 percent of the temperature measured with the reference sensor, otherwise the sensor may not continue to be used.

9.4 Barometer.

Calibrate against a mercury barometer. Calibration must be performed prior to initial use and at least quarterly thereafter. At each calibration point, the absolute pressure measured by the barometer must agree to within ±10 mm Hg of the pressure measured by the mercury barometer, otherwise the barometer may not continue to be used.

9.5 Other Sensors and Gauges.

Calibrate all other sensors and gauges according to the procedures specified by the instrument manufacturer(s).

9.6 Analytical System Calibration.

See section 10.1 of this appendix.

10.0 Analytical Procedures.

The analysis of the Hg samples may be conducted using any instrument or technology capable of quantifying total Hg from the sorbent media and meeting the performance criteria in section 8 of this appendix.

10.1 Analyzer System Calibration.

Perform a multipoint calibration of the analyzer at three or more upscale points over the desired quantitative range (multiple calibration ranges shall be calibrated, if necessary). The field samples analyzed must fall within a calibrated, quantitative range and meet the necessary performance criteria. For samples that are suitable for aliquotting, a series of dilutions may be needed to ensure that the samples fall within a calibrated range. However, for sorbent media samples that are consumed during analysis (*e.g.*, thermal desorption techniques), extra care must be taken to ensure that the analytical system is appropriately calibrated prior to sample analysis. The calibration curve range(s) should be determined based on the anticipated level of Hg mass on the sorbent media. Knowledge of estimated stack Hg concentrations and total sample volume may be required prior to analysis. The calibration curve for use with the various analytical techniques (*e.g.*, UV AA, UV AF, and XRF) can be generated by directly introducing standard solutions into the analyzer or by spiking the standards onto the sorbent media and then introducing into the analyzer after preparing the sorbent/standard according to the particular analytical technique. For each calibration curve, the value of the square of the linear correlation coefficient, *i.e.*, r^2, must be ≥ 0.99, and the analyzer response must be within ±10 percent of reference value at each upscale calibration point. Calibrations must be performed on the day of the analysis, before analyzing any of the samples. Following calibration, an independently prepared standard (not from same calibration stock solution) shall be analyzed. The measured value of the independently prepared standard must be within ±10 percent of the expected value.

10.2 Sample Preparation.

Carefully separate the three sections of each sorbent trap. Combine for analysis all materials associated with each section, *i.e.*, any supporting substrate that the sample gas passes through prior to entering a media section (*e.g.*, glass wool, polyurethane foam, etc.) must be analyzed with that segment.

10.3 Spike Recovery Study.

Before analyzing any field samples, the laboratory must demonstrate the ability to recover and quantify Hg from the sorbent media by performing the following spike recovery study for sorbent media traps spiked with elemental mercury.

Using the procedures described in sections 5.2 and 11.1 of this appendix, spike the third section of nine sorbent traps with gaseous Hg^0, *i.e.*, three traps at each of three different mass loadings, representing the range of masses anticipated in the field samples. This will yield a 3×3 sample matrix. Prepare and analyze the third section of each spiked trap, using the techniques that will be used to prepare and analyze the field samples. The average recovery for each spike concentration must be between 85 and 115 percent. If multiple types of sorbent media are to be analyzed, a separate spike recovery study is required for each sorbent material. If multiple ranges are calibrated, a separate spike recovery study is required for each range.

10.4 Field Sample Analysis

Analyze the sorbent trap samples following the same procedures that were used for conducting the spike recovery study. The three sections of each sorbent trap must be analyzed separately (i.e., section 1, then section 2, then section 3). Quantify the total mass of Hg for each section based on analytical system response and the calibration curve from section 10.1 of this appendix. Determine the spike recovery from sorbent trap section 3. The spike recovery must be no less than 75 percent and no greater than 125 percent. To report the final Hg mass for each trap, add together the Hg masses collected in trap sections 1 and 2.

11.0 Calculations and Data Analysis.

11.1 Calculation of Pre-Sampling Spiking Level.

Determine sorbent trap section 3 spiking level using estimates of the stack Hg concentration, the target sample flow rate, and the expected sample duration. First, calculate the expected Hg mass that will be collected in section 1 of the trap. The pre-sampling spike must be within ±50 percent of this mass. Example calculation: For an estimated stack Hg concentration of 5 μgm/m³, a target sample rate of 0.30 L/min, and a sample duration of 5 days:

(0.30 L/min) (1440 min/day) (5 days) (10^{-3} m³/liter) (5μgm/m³) = 10.8 μgm

A pre-sampling spike of 10.8 μgm ±50 percent is, therefore, appropriate.

11.2 Calculations for Flow-Proportional Sampling.

For the first hour of the data collection period, determine the reference ratio of the stack gas volumetric flow rate to the sample flow rate, as follows:

$$R_{ref} = \frac{KQ_{ref}}{F_{ref}} \qquad \text{(Eq. K-1)}$$

Where:

R_{ref} = Reference ratio of hourly stack gas flow rate to hourly sample flow rate

Q_{ref} = Average stack gas volumetric flow rate for first hour of collection period, adjusted for bias, if necessary, according to section 7.6.5 of appendix A to this part, (scfh)

F_{ref} = Average sample flow rate for first hour of the collection period, in appropriate units (*e.g.*, liters/min, cc/min, dscm/min)

K = Power of ten multiplier, to keep the value of R_{ref} between 1 and 100. The appropriate K value will depend on the selected units of measure for the sample flow rate.

Then, for each subsequent hour of the data collection period, calculate ratio of the stack gas flow rate to the sample flow rate using the equation K–2:

$$R_h = \frac{KQ_h}{F_h} \qquad \text{(Eq. K-2)}$$

Where:

R_h = Ratio of hourly stack gas flow rate to hourly sample flow rate

Q_h = Average stack gas volumetric flow rate for the hour, adjusted for bias, if necessary, according to section 7.6.5 of appendix A to this part, (scfh)

F_h = Average sample flow rate for the hour, in appropriate units (*e.g.*, liters/min, cc/min, dscm/min)

K = Power of ten multiplier, to keep the value of R_h between 1 and 100. The appropriate K value will depend on the selected units of measure for the sample flow rate and the range of expected stack gas flow rates.

Maintain the value of R_h within ±25 percent of R_{ref} throughout the data collection period.

11.3 Calculation of Spike Recovery.

Calculate the percent recovery of each section 3 spike, as follows:

$$\%R = \frac{M_3}{M_s} \times 100 \qquad \text{(Eq. K-3)}$$

Where:

%R = Percentage recovery of the pre-sampling spike

M_3 = Mass of Hg recovered from section 3 of the sorbent trap, (μgm)

M_s = Calculated Hg mass of the pre-sampling spike, from section 7.1.2 of this appendix, (μgm)

11.4 Calculation of Breakthrough.

Calculate the percent breakthrough to the second section of the sorbent trap, as follows:

$$\%B = \frac{M_2}{M_1} \times 100 \qquad \text{(Eq. K-4)}$$

Where:

%B = Percent breakthrough

M_2 = Mass of Hg recovered from section 2 of the sorbent trap, (μgm)

M_1 = Mass of Hg recovered from section 1 of the sorbent trap, (μgm)

11.5 [Reserved]

11.6 Calculation of Hg Concentration

Calculate the Hg concentration for each sorbent trap, using the following equation:

$$C = \frac{M^*}{V_t} \qquad \text{(Eq. K-5)}$$

Where:

C = Concentration of Hg for the collection period, (μgm/dscm)

M^* = Total mass of Hg recovered from sections 1 and 2 of the sorbent trap, (μg)

V_t = Total volume of dry gas metered during the collection period, (dscm). For the purposes of this appendix, standard temperature and pressure are defined as 20 °C and 760 mm Hg, respectively.

11.7 Calculation of Paired Trap Agreeement

Calculate the relative deviation (RD) between the Hg concentrations measured with the paired sorbent traps:

$$RD = \frac{|C_a - C_b|}{C_a + C_b} \times 100 \qquad \text{(Eq. K-6)}$$

Where:

RD = Relative deviation between the Hg concentrations from traps ''a'' and ''b'' (percent)

C_a = Concentration of Hg for the collection period, for sorbent trap ''a'' (μgm/dscm)

C_b = Concentration of Hg for the collection period, for sorbent trap ''b'' (μgm/dscm)

11.8 Calculation of Hg Mass Emissions.

To calculate Hg mass emissions, follow the procedures in section 9.1.2 of appendix F to this part. Use the average of the two Hg concentrations from the paired traps in the calculations, except as provided in §75.15(h) or in Table K–1.

12.0 Method Performance.

These monitoring criteria and procedures have been applied to coal-fired utility boilers (including units with post-combustion emission controls), having vapor-phase Hg concentrations ranging from 0.03 μgm/dscm to 100 μgm/dscm.

[70 FR 28695, May 18, 2005, as amended at 72 FR 51528, Sept. 7, 2007; 73 FR 4376, Jan. 24, 2008]

PART 76—ACID RAIN NITROGEN OXIDES EMISSION REDUCTION PROGRAM

Sec.

76.1 Applicability.
76.2 Definitions.
76.3 General Acid Rain Program provisions.
76.4 Incorporation by reference.
76.5 NO_X emission limitations for Group 1 boilers.
76.6 NO_X emission limitations for Group 2 boilers.
76.7 Revised NO_X emission limitations for Group 1, Phase II boilers.
76.8 Early election for Group 1, Phase II boilers.
76.9 Permit application and compliance plans.
76.10 Alternative emission limitations.
76.11 Emissions averaging.
76.12 Phase I NO_X compliance extension.
76.13 Compliance and excess emissions.
76.14 Monitoring, recordkeeping, and reporting.
76.15 Test methods and procedures.
APPENDIX A TO PART 76—PHASE I AFFECTED COAL-FIRED UTILITY UNITS WITH GROUP 1 OR CELL BURNER BOILERS
APPENDIX B TO PART 76—PROCEDURES AND METHODS FOR ESTIMATING COSTS OF NITROGEN OXIDES CONTROLS APPLIED TO GROUP 1, PHASE I BOILERS

AUTHORITY: 42 U.S.C. 7601 and 7651 *et seq.*

SOURCE: 60 FR 18761, Apr. 13, 1995, unless otherwise noted.

§76.1 Applicability.

(a) Except as provided in paragraphs (b) through (d) of this section, the provisions apply to each coal-fired utility unit that is subject to an Acid Rain emissions limitation or reduction requirement for SO_2 under Phase I or Phase II pursuant to sections 404, 405, or 409 of the Act.

(b) The emission limitations for NO_X under this part apply to each affected coal-fired utility unit subject to section 404(d) or 409(b) of the Act on the date the unit is required to meet the Acid Rain emissions reduction requirement for SO_2.

(c) The provisions of this part apply to each coal-fired substitution unit or compensating unit, designated and approved as a Phase I unit pursuant to §72.41 or §72.43 of this chapter as follows:

(1) A coal-fired substitution unit that is designated in a substitution plan that is approved and active as of January 1, 1995 shall be treated as a Phase I coal-fired utility unit for purposes of this part. In the event the designation of such unit as a substitution unit is terminated after December 31, 1995, pursuant to §72.41 of this chapter and the unit is no longer required to meet Phase I SO_2 emissions limitations, the provisions of this part (including those applicable in Phase I) will continue to apply.

(2) A coal-fired substitution unit that is designated in a substitution plan that is not approved or not active as of January 1, 1995, or a coal-fired compensating unit, shall be treated as a Phase II coal-fired utility unit for purposes of this part.

(d) The provisions of this part for Phase I units apply to each coal-fired transfer unit governed by a Phase I extension plan, approved pursuant to §72.42 of this chapter, on January 1, 1997. Notwithstanding the preceding sentence, a coal-fired transfer unit shall be subject to the Acid Rain emissions limitations for nitrogen oxides beginning on January 1, 1996 if, for that

year, a transfer unit is allocated fewer Phase I extension reserve allowances than the maximum amount that the designated representative could have requested in accordance with § 72.42(c)(5) of this chapter (as adjusted under § 72.42(d) of this chapter) unless the transfer unit is the last unit allocated Phase I extension reserve allowances under the plan.

§ 76.2 Definitions.

All terms used in this part shall have the meaning set forth in the Act, in § 72.2 of this chapter, and in this section as follows:

Alternative contemporaneous annual emission limitation means the maximum allowable NO_X emission rate (on a lb/mmBtu, annual average basis) assigned to an individual unit in a NO_X emissions averaging plan pursuant to § 76.10.

Alternative technology means a control technology for reducing NO_X emissions that is outside the scope of the definition of low NO_X burner technology. Alternative technology does not include overfire air as applied to wall-fired boilers or separated overfire air as applied to tangentially fired boilers.

Approved clean coal technology demonstration project means a project using funds appropriated under the Department of Energy's ''Clean Coal Technology Demonstration Program,'' up to a total amount of $2,500,000,000 for commercial demonstration of clean coal technology, or similar projects funded through appropriations for the Environmental Protection Agency. The Federal contribution for a qualifying project shall be at least 20 percent of the total cost of the demonstration project.

Arch-fired boiler means a dry bottom boiler with circular burners, or coal and air pipes, oriented downward and mounted on waterwalls that are at an angle significantly different from the horizontal axis and the vertical axis. This definition shall include only the following units: Holtwood unit 17, Hunlock unit 6, and Sunbury units 1A, 1B, 2A, and 2B. This definition shall exclude dry bottom turbo fired boilers.

Cell burner boiler means a wall-fired boiler that utilizes two or three circular burners combined into a single vertically oriented assembly that results in a compact, intense flame. Any low NO_X retrofit of a cell burner boiler that reuses the existing cell burner, close-coupled wall opening configuration would not change the designation of the unit as a cell burner boiler.

Coal-fired utility unit means a utility unit in which the combustion of coal (or any coal-derived fuel) on a Btu basis exceeds 50.0 percent of its annual heat input during the following calendar year: for Phase I units, in calendar year 1990; and, for Phase II units, in calendar year 1995 or, for a Phase II unit that did not combust any fuel that resulted in the generation of electricity in calendar year 1995, in any calendar year during the period 1990–1995. For the purposes of this part, this definition shall apply notwithstanding the definition in § 72.2 of this chapter.

Combustion controls means technology that minimizes NO_X formation by staging fuel and combustion air flows in a boiler. This definition shall include low NO_X burners, overfire air, or low NO_X burners with overfire air.

Cyclone boiler means a boiler with one or more water-cooled horizontal cylindrical chambers in which coal combustion takes place. The horizontal cylindrical chamber(s) is (are) attached to the bottom of the furnace. One or more cylindrical chambers are arranged either on one furnace wall or on two opposed furnace walls. Gaseous combustion products exiting from the chamber(s) turn 90 degrees to go up through the boiler while coal ash exits the bottom of the boiler as a molten slag.

Demonstration period means a period of time not less than 15 months, approved under § 76.10, for demonstrating that the affected unit cannot meet the applicable emission limitation under § 76.5, 76.6, or 76.7 and establishing the minimum NO_X emission rate that the unit can achieve during long-term load dispatch operation.

Dry bottom means the boiler has a furnace bottom temperature below the ash melting point and the bottom ash is removed as a solid.

Economizer means the lowest temperature heat exchange section of a utility boiler where boiler feed water is heated by the flue gas.

Flue gas means the combustion products arising from the combustion of fossil fuel in a utility boiler.

Group 1 boiler means a tangentially fired boiler or a dry bottom wall-fired boiler (other than a unit applying cell burner technology).

Group 2 boiler means a wet bottom wall-fired boiler, a cyclone boiler, a boiler applying cell burner technology, a vertically fired boiler, an arch-fired boiler, or any other type of utility boiler (such as a fluidized bed or stoker boiler) that is not a Group 1 boiler.

Low NO_X burners and *low NO_X burner technology* means commercially available combustion modification NO_X controls that minimize NO_X formation by introducing coal and its associated combustion air into a boiler such that initial combustion occurs in a manner that promotes rapid coal devolatilization in a fuel-rich (i.e., oxygen deficient) environment and introduces additional air to achieve a final fuel-lean (i.e., oxygen rich) environment to complete the combustion process. This definition shall include the staging of any portion of the combustion air using air nozzles or registers located inside any waterwall hole that includes a burner. This definition shall exclude the staging of any portion of the combustion air using air nozzles or ports located outside any waterwall hole that includes a burner (commonly referred to as NO_X ports or separated overfire air ports).

Maximum Continuous Steam Flow at 100% of Load means the maximum capacity of a boiler as reported in item 3 (Maximum Continuous Steam Flow at 100% Load in thousand pounds per hour), Section C (design parameters), Part III (boiler information) of the Department of Energy's Form EIA–767 for 1995.

Non-plug-in combustion controls means the replacement, in a cell burner boiler, of the portions of the waterwalls containing the cell burners by new portions of the waterwalls containing low NO_X burners or low NO_X burners with overfire air.

Operating period means a period of time of not less than three consecutive months and that occurs not more than one month prior to applying for an alternative emission limitation demonstration period under § 76.10, during which the owner or operator of an affected unit that cannot meet the applicable emission limitation:

(1) Operates the installed NO_X emission controls in accordance with primary vendor specifications and procedures, with the unit operating under normal conditions; and

(2) records and reports quality-assured continuous emission monitoring (CEM) and unit operating data according to the methods and procedures in part 75 of this chapter.

Plug-in combustion controls means the replacement, in a cell burner boiler, of existing cell burners by low NO_X burners or low NO_X burners with overfire air.

Primary vendor means the vendor of the NO_X emission control system who has primary responsibility for providing the equipment, service, and technical expertise necessary for detailed design, installation, and operation of the controls, including process data, mechanical drawings, operating manuals, or any combination thereof.

Reburning means reducing the coal and combustion air to the main burners and injecting a reburn fuel (such as gas or oil) to create a fuel-rich secondary combustion zone above the main burner zone and final combustion air to create a fuel-lean burnout zone. The formation of NO_X is inhibited in the main burner zone due to the reduced combustion intensity, and NO_X is destroyed in the fuel-rich secondary combustion zone by conversion to molecular nitrogen.

Selective catalytic reduction means a noncombustion control technology that destroys NO_X by injecting a reducing agent (e.g., ammonia) into the flue gas that, in the presence of a catalyst (e.g., vanadium, titanium, or zeolite), converts NO_X into molecular nitrogen and water.

Selective noncatalytic reduction means a noncombustion control technology that destroys NO_X by injecting a reducing agent (e.g., ammonia, urea, or cyanuric acid) into the flue gas, downstream of the combustion zone that converts NO_X to molecular nitrogen, water, and when urea or cyanuric acid are used, to carbon dioxide (CO_2).

Stoker boiler means a boiler that burns solid fuel in a bed, on a stationary or moving grate, that is located at the bottom of the furnace.

Tangentially fired boiler means a boiler that has coal and air nozzles mounted in each corner of the furnace where the vertical furnace walls meet. Both pulverized coal and air are directed from the furnace corners along a line tangential to a circle lying in a horizontal plane of the furnace.

Turbo-fired boiler means a pulverized coal, wall-fired boiler with burners arranged on walls so that the individual flames extend down toward the furnace bottom and then turn back up through the center of the furnace.

Vertically fired boiler means a dry bottom boiler with circular burners, or coal and air pipes, oriented downward and mounted on waterwalls that are horizontal or at an angle. This definition shall include dry bottom roof-fired boilers and dry bottom top-fired boilers, and shall exclude dry bottom arch-fired boilers and dry bottom turbo-fired boilers.

Wall-fired boiler means a boiler that has pulverized coal burners arranged on the walls of the furnace. The burners have discrete, individual flames that extend perpendicularly into the furnace area.

Wet bottom means that the ash is removed from the furnace in a molten state. The term ''wet bottom boiler'' shall include: wet bottom wall-fired boilers, including wet bottom turbo-fired boilers; and wet bottom boilers otherwise meeting the definition of vertically fired boilers, including wet bottom arch-fired boilers, wet bottom roof-fired boilers, and wet bottom top-fired boilers. The term ''wet bottom boiler'' shall exclude cyclone boilers and tangentially fired boilers.

[60 FR 18761, Apr. 13, 1995, as amended at 61 FR 67162, Dec. 19, 1996]

§ 76.3 General Acid Rain Program provisions.

The following provisions of part 72 of this chapter shall apply to this part:

(a) § 72.2 (Definitions);

(b) § 72.3 (Measurements, abbreviations, and acronyms);

(c) § 72.4 (Federal authority);

(d) § 72.5 (State authority);

(e) § 72.6 (Applicability);

(f) § 72.7 (New unit exemption);

(g) § 72.8 (Retired units exemption);

(h) § 72.9 (Standard requirements);

(i) § 72.10 (Availability of information); and

(j) § 72.11 (Computation of time).

In addition, the procedures for appeals of decisions of the Administrator under this part are contained in part 78 of this chapter.

§ 76.4 Incorporation by reference.

(a) The materials listed in this section are incorporated by reference in the sections noted. These incorporations by reference (IBR's) were approved by the Director of the Federal Register in accordance with 5 U.S.C. 552(a) and 1 CFR part 51. These materials are incorporated as they existed on the date of approval, and notice of any change in these materials will be published in the FEDERAL REGISTER. The materials are available for purchase at the corresponding address noted below and are available for inspection at the Public Information Reference Unit, U.S. EPA, 401 M St., SW., Washington, DC, and at the Library (MD–35), U.S. EPA, Research Triangle Park, North Carolina or at the National Archives and Records Administration (NARA). For information on the availability of this material at NARA, call 202–741–6030, or go to: *http://www.archives.gov/federal_register/code_of_federal_regulations/ibr_locations.html*.

(b) The following materials are available for purchase from at least one of the following addresses: American Society for Testing and Materials (ASTM), 1916 Race Street, Philadelphia, Pennsylvania 19103; or the University Microfilms International, 300 North Zeeb Road, Ann Arbor, Michigan 48106.

(1) ASTM D 3176–89, Standard Practice for Ultimate Analysis of Coal and Coke, IBR approved May 23, 1995 for § 76.15.

(2) ASTM D 3172–89, Standard Practice for Proximate Analysis of Coal and Coke, IBR approved May 23, 1995 for § 76.15.

(c) The following material is available for purchase from the American Society of Mechanical Engineers

(ASME), 22 Law Drive, Box 2350, Fairfield, NJ 07007–2350.

(1) ASME Performance Test Code 4.2 (1991), Test Code for Coal Pulverizers, IBR approved May 23, 1995 for § 76.15.

(2) [Reserved]

(d) The following material is available for purchase from the American National Standards Institute, 11 West 42nd Street, New York, NY 10036 or from the International Organization for Standardization (ISO), Case Postale 56, CH–1211 Geneve 20, Switzerland.

(1) ISO 9931 (December, 1991) ''Coal—Sampling of Pulverized Coal Conveyed by Gases in Direct Fired Coal Systems,'' IBR approved May 23, 1995 for § 76.15.

(2) [Reserved]

§ 76.5 NO_X emission limitations for Group 1 boilers.

(a) Beginning January 1, 1996, or for a unit subject to section 404(d) of the Act, the date on which the unit is required to meet Acid Rain emission reduction requirements for SO_2, the owner or operator of a Phase I coal-fired utility unit with a tangentially fired boiler or a dry bottom wall-fired boiler (other than units applying cell burner technology) shall not discharge, or allow to be discharged, emissions of NO_X to the atmosphere in excess of the following limits, except as provided in paragraphs (c) or (e) of this section or in § 76.10, 76.11, or 76.12:

(1) 0.45 lb/mmBtu of heat input on an annual average basis for tangentially fired boilers.

(2) 0.50 lb/mmBtu of heat input on an annual average basis for dry bottom wall-fired boilers (other than units applying cell burner technology).

(b) The owner or operator shall determine the annual average NO_X emission rate, in lb/mmBtu, using the methods and procedures specified in part 75 of this chapter.

(c) Unless the unit meets the early election requirement of § 76.8, the owner or operator of a coal-fired substitution unit with a tangentially fired boiler or a dry bottom wall-fired boiler (other than units applying cell burner technology) that satisfies the requirements of § 76.1(c)(2), shall comply with the NO_X emission limitations that apply to Group 1, Phase II boilers.

(d) The owner or operator of a Phase I unit with a cell burner boiler that converts to a conventional wall-fired boiler on or before January 1, 1995 or, for a unit subject to section 404(d) of the Act, the date the unit is required to meet Acid Rain emissions reduction requirements for SO_2 shall comply, by such respective date or January 1, 1996, whichever is later, with the NO_X emissions limitation applicable to dry bottom wall-fired boilers under paragraph (a) of this section, except as provided in paragraphs (c) or (e) of this section or in § 76.10, 76.11, or 76.12.

(e) The owner or operator of a Phase I unit with a Group 1 boiler that converts to a fluidized bed or other type of utility boiler not included in Group 1 boilers on or before January 1, 1995 or, for a unit subject to section 404(d) of the Act, the date the unit is required to meet Acid Rain emissions reduction requirements for SO_2 is exempt from the NO_X emissions limitations specified in paragraph (a) of this section, but shall comply with the NO_X emission limitations for Group 2 boilers under § 76.6.

(f) Except as provided in § 76.8 and in paragraph (c) of this section, each unit subject to the requirements of this section is not subject to the requirements of § 76.7.

[60 FR 18761, Apr. 13, 1995, as amended at 61 FR 67162, Dec. 19, 1996]

§ 76.6 NO_X emission limitations for Group 2 boilers.

(a) Beginning January 1, 2000 or, for a unit subject to section 409(b) of the Act, the date on which the unit is required to meet Acid Rain emission reduction requirements for SO_2, the owner or operator of a Group 2, coal-fired boiler with a cell burner boiler, cyclone boiler, a wet bottom boiler, or a vertically fired boiler shall not discharge, or allow to be discharged, emissions of NO_X to the atmosphere in excess of the following limits, except as provided in §§ 76.10 or 76.11:

(1) 0.68 lb/mmBtu of heat input on an annual average basis for cell burner boilers. The NO_X emission control technology on which the emission limitation is based is plug-in combustion controls or non-plug-in combustion controls. Except as provided in § 76.5(d),

the owner or operator of a unit with a cell burner boiler that installs non-plug-in combustion controls shall comply with the emission limitation applicable to cell burner boilers.

(2) 0.86 lb/mmBtu of heat input on an annual average basis for cyclone boilers with a Maximum Continuous Steam Flow at 100% of Load of greater than 1060, in thousands of lb/hr. The NO_X emission control technology on which the emission limitation is based is natural gas reburning or selective catalytic reduction.

(3) 0.84 lb/mmBtu of heat input on an annual average basis for wet bottom boilers, with a Maximum Continuous Steam Flow at 100% of Load of greater than 450, in thousands of lb/hr. The NO_X emission control technology on which the emission limitation is based is natural gas reburning or selective catalytic reduction.

(4) 0.80 lb/mmBtu of heat input on an annual average basis for vertically fired boilers. The NO_X emission control technology on which the emission limitation is based is combustion controls.

(b) The owner or operator shall determine the annual average NO_X emission rate, in lb/mmBtu, using the methods and procedures specified in part 75 of this chapter.

[62 FR 67162, Dec. 19, 1996; 62 FR 3464, Jan. 23, 1997; 62 FR 32040, June 12, 1997; 64 FR 55838, Oct. 15, 1999]

§ 76.7 Revised NO_X emission limitations for Group 1, Phase II boilers.

(a) Beginning January 1, 2000, the owner or operator of a Group 1, Phase II coal-fired utility unit with a tangentially fired boiler or a dry bottom wall-fired boiler shall not discharge, or allow to be discharged, emissions of NO_X to the atmosphere in excess of the following limits, except as provided in §§ 76.8, 76.10, or 76.11:

(1) 0.40 lb/mmBtu of heat input on an annual average basis for tangentially fired boilers.

(2) 0.46 lb/ mmBtu of heat input on an annual average basis for dry bottom wall-fired boilers (other than units applying cell burner technology).

(b) The owner or operator shall determine the annual average NO_X emission rate, in lb/mmBtu, using the methods and procedures specified in part 75 of this chapter.

[60 FR 18761, Apr. 13, 1995, as amended at 61 FR 67163, Dec. 19, 1996]

§ 76.8 Early election for Group 1, Phase II boilers.

(a) *General provisions.* (1) The owner or operator of a Phase II coal-fired utility unit with a Group 1 boiler may elect to have the unit become subject to the applicable emissions limitation for NO_X under § 76.5, starting no later than January 1, 1997.

(2) The owner or operator of a Phase II coal-fired utility unit with a Group 1 boiler that elects to become subject to the applicable emission limitation under § 76.5 shall not be subject to § 76.7 until January 1, 2008, provided the designated representative demonstrates that the unit is in compliance with the limitation under § 76.5, using the methods and procedures specified in part 75 of this chapter, for the period beginning January 1 of the year in which the early election takes effect (but not later than January 1, 1997) and ending December 31, 2007.

(3) The owner or operator of any Phase II unit with a cell burner boiler that converts to conventional burner technology may elect to become subject to the applicable emissions limitation under § 76.5 for dry bottom wall-fired boilers, provided the owner or operator complies with the provisions in paragraph (a)(2) of this section.

(4) The owner or operator of a Phase II unit approved for early election shall not submit an application for an alternative emissions limitation demonstration period under § 76.10 until the earlier of:

(i) January 1, 2008; or

(ii) Early election is terminated pursuant to paragraph (e)(3) of this section.

(5) The owner or operator of a Phase II unit approved for early election may not incorporate the unit into an averaging plan prior to January 1, 2000. On or after January 1, 2000, for purposes of the averaging plan, the early election unit will be treated as subject to the applicable emissions limitation for NO_X for Phase II units with Group 1 boilers under § 76.7.

(b) *Submission requirements.* In order to obtain early election status, the designated representative of a Phase II unit with a Group 1 boiler shall submit an early election plan to the Administrator by January 1 of the year the early election is to take effect, but not later than January 1, 1997. Notwithstanding § 72.40 of this chapter, and unless the unit is a substitution unit under § 72.41 of this chapter or a compensating unit under § 72.43 of this chapter, a complete compliance plan covering the unit shall not include the provisions for SO_2 emissions under § 72.40(a)(1) of this chapter.

(c) *Contents of an early election plan.* A complete early election plan shall include the following elements in a format prescribed by the Administrator:

(1) A request for early election;

(2) The first year for which early election is to take effect, but not later than 1997; and

(3) The special provisions under paragraph (e) of this section.

(d)(1) *Permitting authority's action.* To the extent the Administrator determines that an early election plan complies with the requirements of this section, the Administrator will approve the plan and:

(i) If a Phase I Acid Rain permit governing the source at which the unit is located has been issued, will revise the permit in accordance with the permit modification procedures in § 72.81 of this chapter to include the early election plan; or

(ii) If a Phase I Acid Rain permit governing the source at which the unit is located has not been issued, will issue a Phase I Acid Rain permit effective from January 1, 1995 through December 31, 1999, that will include the early election plan and a complete compliance plan under § 72.40(a) of this chapter and paragraph (b) of this section. If the early election plan is not effective until after January 1, 1995, the permit will not contain any NO_X emissions limitations until the effective date of the plan.

(2) Beginning January 1, 2000, the permitting authority will approve any early election plan previously approved by the Administrator during Phase I, unless the plan is terminated pursuant to paragraph (e)(3) of this section.

(e) *Special provisions*—(1) *Emissions limitations*—(i) *Sulfur dioxide.* Notwithstanding § 72.9 of this chapter, a unit that is governed by an approved early election plan and that is not a substitution unit under § 72.41 of this chapter or a compensating unit under § 72.43 of this chapter shall not be subject to the following standard requirements under § 72.9 of this chapter for Phase I:

(A) The permit requirements under §§ 72.9(a)(1) (i) and (ii) of this chapter;

(B) The sulfur dioxide requirements under § 72.9(c) of this chapter; and

(C) The excess emissions requirements under § 72.9(e)(1) of this chapter.

(ii) *Nitrogen oxides.* A unit that is governed by an approved early election plan shall be subject to an emissions limitation for NO_X as provided under paragraph (a)(2) of this section except as provided under paragraph (e)(3)(iii) of this section.

(2) *Liability.* The owners and operators of any unit governed by an approved early election plan shall be liable for any violation of the plan or this section at that unit. The owners and operators shall be liable, beginning January 1, 2000, for fulfilling the obligations specified in part 77 of this chapter.

(3) *Termination.* An approved early election plan shall be in effect only until the earlier of January 1, 2008 or January 1 of the calendar year for which a termination of the plan takes effect.

(i) If the designated representative of the unit under an approved early election plan fails to demonstrate compliance with the applicable emissions limitation under § 76.5 for any year during the period beginning January 1 of the first year the early election takes effect and ending December 31, 2007, the permitting authority will terminate the plan. The termination will take effect beginning January 1 of the year after the year for which there is a failure to demonstrate compliance, and the designated representative may not submit a new early election plan.

(ii) The designated representative of the unit under an approved early election plan may terminate the plan any year prior to 2008 but may not submit a new early election plan. In order to

terminate the plan, the designated representative must submit a notice under § 72.40(d) of this chapter by January 1 of the year for which the termination is to take effect.

(iii)(A) If an early election plan is terminated any year prior to 2000, the unit shall meet, beginning January 1, 2000, the applicable emissions limitation for NO_X for Phase II units with Group 1 boilers under § 76.7.

(B) If an early election plan is terminated in or after 2000, the unit shall meet, beginning on the effective date of the termination, the applicable emissions limitation for NO_X for Phase II units with Group 1 boilers under § 76.7.

[60 FR 18761, Apr. 13, 1995, as amended at 61 FR 67163, Dec. 19, 1996]

§ 76.9 Permit application and compliance plans.

(a) *Duty to apply.* (1) The designated representative of any source with an affected unit subject to this part shall submit, by the applicable deadline under paragraph (b) of this section, a complete Acid Rain permit application (or, if the unit is covered by an Acid Rain permit, a complete permit revision) that includes a complete compliance plan for NO_X emissions covering the unit.

(2) The original and three copies of the permit application and compliance plan for NO_X emissions for Phase I shall be submitted to the EPA regional office for the region where the applicable source is located. The original and three copies of the permit application and compliance plan for NO_X emissions for Phase II shall be submitted to the permitting authority.

(b) *Deadlines.* (1) For a Phase I unit with a Group 1 boiler, the designated representative shall submit a complete permit application and compliance plan for NO_X covering the unit during Phase I to the applicable permitting authority not later than May 6, 1994.

(2) For a Phase I or Phase II unit with a Group 2 boiler or a Phase II unit with a Group 1 boiler, the designated representative shall submit a complete permit application and compliance plan for NO_X emissions covering the unit in Phase II to the Administrator not later than January 1, 1998, except that early election units shall also submit an application not later than January 1, 1997.

(c) *Information requirements for NO_X compliance plans.* (1) In accordance with § 72.40(a)(2) of this chapter, a complete compliance plan for NO_X shall, for each affected unit included in the permit application and subject to this part, either certify that the unit will comply with the applicable emissions limitation under § 76.5, 76.6, or 76.7 or specify one or more other Acid Rain compliance options for NO_X in accordance with the requirements of this part. A complete compliance plan for NO_X for a source shall include the following elements in a format prescribed by the Administrator:

(i) Identification of the source;

(ii) Identification of each affected unit that is at the source and is subject to this part;

(iii) Identification of the boiler type of each unit;

(iv) Identification of the compliance option proposed for each unit (i.e., meeting the applicable emissions limitation under § 76.5, 76.6, 76.7, 76.8 (early election), 76.10 (alternative emission limitation), 76.11 (NO_X emissions averaging), or 76.12 (Phase I NO_X compliance extension)) and any additional information required for the appropriate option in accordance with this part;

(v) Reference to the standard requirements in § 72.9 of this chapter (consistent with § 76.8(e)(1)(i)); and

(vi) The requirements of §§ 72.21 (a) and (b) of this chapter.

(2) [Reserved]

(d) *Duty to reapply.* The designated representative of any source with an affected unit subject to this part shall submit a complete Acid Rain permit application, including a complete compliance plan for NO_X emissions covering the unit, in accordance with the deadlines in § 72.30(c) of this chapter.

§ 76.10 Alternative emission limitations.

(a) *General provisions.* (1) The designated representative of an affected unit that is not an early election unit pursuant to § 76.8 and cannot meet the applicable emission limitation in § 76.5, 76.6, or 76.7 using, for Group 1 boilers, either low NO_X burner technology or an

alternative technology in accordance with paragraph (e)(11) of this section, or, for tangentially fired boilers, separated overfire air, or, for Group 2 boilers, the technology on which the applicable emission limitation is based may petition the permitting authority for an alternative emission limitation less stringent than the applicable emission limitation.

(2) In order for the unit to qualify for an alternative emission limitation, the designated representative shall demonstrate that the affected unit cannot meet the applicable emission limitation in § 76.5, 76.6, or 76.7 based on a showing, to the satisfaction of the Administrator, that:

(i)(A) For a tangentially fired boiler, the owner or operator has either properly installed low NO_X burner technology or properly installed separated overfire air; or

(B) For a dry bottom wall-fired boiler (other than a unit applying cell burner technology), the owner or operator has properly installed low NO_X burner technology; or

(C) For a Group 1 boiler, the owner or operator has properly installed an alternative technology (including but not limited to reburning, selective noncatalytic reduction, or selective catalytic reduction) that achieves NO_X emission reductions demonstrated in accordance with paragraph (e)(11) of this section; or

(D) For a Group 2 boiler, the owner or operator has properly installed the appropriate NO_X emission control technology on which the applicable emission limitation in § 76.6 is based; and

(ii) The installed NO_X emission control system has been designed to meet the applicable emission limitation in § 76.5, 76.6, or 76.7; and

(iii) For a demonstration period of at least 15 months or other period of time, as provided in paragraph (f)(1) of this section:

(A) The NO_X emission control system has been properly installed and properly operated according to specifications and procedures designed to minimize the emissions of NO_X to the atmosphere;

(B) Unit operating data as specified in this section show that the unit and NO_X emission control system were operated in accordance with the bid and design specifications on which the design of the NO_X emission control system was based; and

(C) Unit operating data as specified in this section, continuous emission monitoring data obtained pursuant to part 75 of this chapter, and the test data specific to the NO_X emission control system show that the unit could not meet the applicable emission limitation in § 76.5, 76.6, or 76.7.

(b) *Petitioning process*. The petitioning process for an alternative emission limitation shall consist of the following steps:

(1) Operation during a period of at least 3 months, following the installation of the NO_X emission control system, that shows that the specific unit and the NO_X emission control system was unable to meet the applicable emissions limitation under § 76.5, 76.6, or 76.7 and was operated in accordance with the operating conditions upon which the design of the NO_X emission control system was based and with vendor specifications and procedures;

(2) Submission of a petition for an alternative emission limitation demonstration period as specified in paragraph (d) of this section;

(3) Operation during a demonstration period of at least 15 months, or other period of time as provided in paragraph (f)(1) of this section, that demonstrates the inability of the specific unit to meet the applicable emissions limitation under § 76.5, 76.6, or 76.7 and the minimum NO_X emissions rate that the specific unit can achieve during long-term load dispatch operation; and

(4) Submission of a petition for a final alternative emission limitation as specified in paragraph (e) of this section.

(c) *Deadlines*—(1) *Petition for an alternative emission limitation demonstration period*. The designated representative of the unit shall submit a petition for an alternative emission limitation demonstration period to the permitting authority after the unit has been operated for at least 3 months after installation of the NO_X emission control system required under paragraph (a)(2) of this section and by the following deadline:

(i) For units that seek to have an alternative emission limitation demonstration period apply during all or part of calendar year 1996, or any previous calendar year by the later of:

(A) 120 days after startup of the NO_X emission control system, or

(B) May 1, 1996.

(ii) For units that seek an alternative emission limitation demonstration period beginning in a calendar year after 1996, not later than:

(A) 120 days after January 1 of that calendar year, or

(B) 120 days after startup of the NO_X emission control system if the unit is not operating at the beginning of that calendar year.

(2) *Petition for a final alternative emission limitation*. Not later than 90 days after the end of an approved alternative emission limitation demonstration period for the unit, the designated representative of the unit may submit a petition for an alternative emission limitation to the permitting authority.

(3) *Renewal of an alternative emission limitation*. In order to request continuation of an alternative emission limitation, the designated representative must submit a petition to renew the alternative emission limitation on the date that the application for renewal of the source's Acid Rain permit containing the alternative emission limitation is due.

(d) *Contents of petition for an alternative emission limitation demonstration period*. The designated representative of an affected unit that has met the minimum criteria under paragraph (a) of this section and that has been operated for a period of at least 3 months following the installation of the required NO_X emission control system may submit to the permitting authority a petition for an alternative emission limitation demonstration period. In the petition, the designated representative shall provide the following information in a format prescribed by the Administrator:

(1) Identification of the unit;

(2) The type of NO_X control technology installed (e.g., low NO_X burner technology, selective noncatalytic reduction, selective catalytic reduction, reburning);

(3) If an alternative technology is installed, the time period (not less than 6 consecutive months) prior to installation of the technology to be used for the demonstration required in paragraph (e)(11) of this section.

(4) Documentation as set forth in § 76.14(a)(1) showing that the installed NO_X emission control system has been designed to meet the applicable emission limitation in § 76.5, 76.6, or 76.7 and that the system has been properly installed according to procedures and specifications designed to minimize the emissions of NO_X to the atmosphere;

(5) The date the unit commenced operation following the installation of the NO_X emission control system or the date the specific unit became subject to the emission limitations of § 76.5, 76.6, or 76.7, whichever is later;

(6) The dates of the operating period (which must be at least 3 months long);

(7) Certification by the designated representative that the owner(s) or operator operated the unit and the NO_X emission control system during the operating period in accordance with: Specifications and procedures designed to achieve the maximum NO_X reduction possible with the installed NO_X emission control system or the applicable emission limitation in § 76.5, 76.6, or 76.7; the operating conditions upon which the design of the NO_X emission control system was based; and vendor specifications and procedures;

(8) A brief statement describing the reason or reasons why the unit cannot achieve the applicable emission limitation in § 76.5, 76.6, or 76.7;

(9) A demonstration period plan, as set forth in § 76.14(a)(2);

(10) Unit operating data and quality-assured continuous emission monitoring data (including the specific data items listed in § 76.14(a)(3) collected in accordance with part 75 of this chapter during the operating period) and demonstrating the inability of the specific unit to meet the applicable emission limitation in § 76.5, 76.6, or 76.7 on an annual average basis while operating as certified under paragraph (d)(7) of this section;

(11) An interim alternative emission limitation, in lb/mmBtu, that the unit can achieve during a demonstration period of at least 15 months. The interim

alternative emission limitation shall be derived from the data specified in paragraph (d)(10) of this section using methods and procedures satisfactory to the Administrator;

(12) The proposed dates of the demonstration period (which must be at least 15 months long);

(13) A report which outlines the testing and procedures to be taken during the demonstration period in order to determine the maximum NO_X emission reduction obtainable with the installed system. The report shall include the reasons for the NO_X emission control system's failure to meet the applicable emission limitation, and the tests and procedures that will be followed to optimize the NO_X emission control system's performance. Such tests and procedures may include those identified in § 76.15 as appropriate.

(14) The special provisions at paragraph (g)(1) of this section.

(e) *Contents of petition for a final alternative emission limitation*. After the approved demonstration period, the designated representative of the unit may petition the permitting authority for an alternative emission limitation. The petition shall include the following elements in a format prescribed by the Administrator:

(1) Identification of the unit;

(2) Certification that the owner(s) or operator operated the affected unit and the NO_X emission control system during the demonstration period in accordance with: specifications and procedures designed to achieve the maximum NO_X reduction possible with the installed NO_X emission control system or the applicable emissions limitation in § 76.5, 76.6, or 76.7; the operating conditions (including load dispatch conditions) upon which the design of the NO_X emission control system was based; and vendor specifications and procedures.

(3) Certification that the owner(s) or operator have installed in the affected unit all NO_X emission control systems, made any operational modifications, and completed any planned upgrades and/or maintenance to equipment specified in the approved demonstration period plan for optimizing NO_X emission reduction performance, consistent with the demonstration period plan and the proper operation of the installed NO_X emission control system. Such certification shall explain any differences between the installed NO_X emission control system and the equipment configuration described in the approved demonstration period plan.

(4) A clear description of each step or modification taken during the demonstration period to improve or optimize the performance of the installed NO_X emission control system.

(5) Engineering design calculations and drawings that show the technical specifications for installation of any additional operational or emission control modifications installed during the demonstration period.

(6) Unit operating and quality-assured continuous emission monitoring data (including the specific data listed in § 76.14(b)) collected in accordance with part 75 of this chapter during the demonstration period and demonstrating the inability of the specific unit to meet the applicable emission limitation in § 76.5, 76.6, or 76.7 on an annual average basis while operating in accordance with the certification under paragraph (e)(2) of this section.

(7) A report (based on the parametric test requirements set forth in the approved demonstration period plan as identified in paragraph (d)(13) of this section), that demonstrates the unit was operated in accordance with the operating conditions upon which the design of the NO_X emission control system was based and describes the reason or reasons for the failure of the installed NO_X emission control system to meet the applicable emission limitation in § 76.5, 76.6, or 76.7 on an annual average basis.

(8) The minimum NO_X emission rate, in lb/mmBtu, that the affected unit can achieve on an annual average basis with the installed NO_X emission control system. This value, which shall be the requested alternative emission limitation, shall be derived from the data specified in this section using methods and procedures satisfactory to the Administrator and shall be the lowest annual emission rate the unit can achieve with the installed NO_X emission control system;

(9) All supporting data and calculations documenting the determination

of the requested alternative emission limitation and its conformance with the methods and procedures satisfactory to the Administrator;

(10) The special provisions in paragraph (g)(2) of this section.

(11) In addition to the other requirements of this section, the owner or operator of an affected unit with a Group 1 boiler that has installed an alternative technology in addition to or in lieu of low NO_X burner technology and cannot meet the applicable emission limitation in § 76.5 shall demonstrate, to the satisfaction of the Administrator, that the actual percentage reduction in NO_X emissions (lbs/mmBtu), on an annual average basis is greater than 65 percent of the average annual NO_X emissions prior to the installation of the NO_X emission control system. The percentage reduction in NO_X emissions shall be determined using continuous emissions monitoring data for NO_X taken during the time period (under paragraph (d)(3) of this section) prior to the installation of the NO_X emission control system and during long-term load dispatch operation of the specific boiler.

(f) *Permitting authority's action*—(1) *Alternative emission limitation demonstration period.* (i) The permitting authority may approve an alternative emission limitation demonstration period and demonstration period plan, provided that the requirements of this section are met to the satisfaction of the permitting authority. The permitting authority shall disapprove a demonstration period if the requirements of paragraph (a) of this section were not met during the operating period.

(ii) If the demonstration period is approved, the permitting authority will include, as part of the demonstration period, the 4 month period prior to submission of the application in the demonstration period.

(iii) The alternative emission limitation demonstration period will authorize the unit to emit at a rate not greater than the interim alternative emission limitation during the demonstration period on or after January 1, 1996 for Phase I units and the applicable date established in § 76.6 or 76.7 for Phase II units, and until the date that the Administrator approves or denies a final alternative emission limitation.

(iv) After an alternative emission limitation demonstration period is approved, if the designated representative requests an extension of the demonstration period in accordance with paragraph (g)(1)(i)(B) of this section, the permitting authority may extend the demonstration period by administrative amendment (under § 72.83 of this chapter) to the Acid Rain permit.

(v) The permitting authority shall deny the demonstration period if the designated representative cannot demonstrate that the unit met the requirements of paragraph (a)(2) of this section. In such cases, the permitting authority shall require that the owner or operator operate the unit in compliance with the applicable emission limitation in § 76.5, 76.6, or 76.7 for the period preceding the submission of the application for an alternative emission limitation demonstration period, including the operating period, if such periods are after the date on which the unit is subject to the standard limit under § 76.5, 76.6, or 76.7.

(2) *Alternative emission limitation.* (i) If the permitting authority determines that the requirements in this section are met, the permitting authority will approve an alternative emission limitation and issue or revise an Acid Rain permit to apply the approved limitation, in accordance with subparts F and G of part 72 of this chapter. The permit will authorize the unit to emit at a rate not greater than the approved alternative emission limitation, starting the date the permitting authority revises an Acid Rain permit to approve an alternative emission limitation.

(ii) If a permitting authority disapproves an alternative emission limitation under paragraph (a)(2) of this section, the owner or operator shall operate the affected unit in compliance with the applicable emission limitation in § 76.5, 76.6, or 76.7 (unless the unit is participating in an approved averaging plan under § 76.11) beginning on the date the permitting authority revises an Acid Rain permit to disapprove an alternative emission limitation.

(3) *Alternative emission limitation renewal.* (i) If, upon review of a petition

to renew an approved alternative emission limitation, the permitting authority determines that no changes have been made to the control technology, its operation, the operating conditions on which the alternative emission limitation was based, or the actual NO_X emission rate, the alternative emission limitation will be renewed.

(ii) If the permitting authority determines that changes have been made to the control technology, its operation, the fuel quality, or the operating conditions on which the alternative emission limitation was based, the designated representative shall submit, in order to renew the alternative emission limitation or to obtain a new alternative emission limitation, a petition for an alternative emission limitation demonstration period that meets the requirements of paragraph (d) of this section using a new demonstration period.

(g) *Special provisions*—(1) *Alternative emission limitation demonstration period*—(i) *Emission limitations.* (A) Each unit with an approved alternative emission limitation demonstration period shall comply with the interim emission limitation specified in the unit's permit beginning on the effective date of the demonstration period specified in the permit and, if a timely petition for a final alternative emission limitation is submitted, extending until the date on which the permitting authority issues or revises an Acid Rain permit to approve or disapprove an alternative emission limitation. If a timely petition is not submitted, then the unit shall comply with the standard emission limit under § 76.5, 76.6, or 76.7 beginning on the date the petition was required to be submitted under paragraph (c)(2) of this section.

(B) When the owner or operator identifies, during the demonstration period, boiler operating or NO_X emission control system modifications or upgrades that would produce further NO_X emission reductions, enabling the affected unit to comply with or bring its emission rate closer to the applicable emissions limitation under § 76.5, 76.6, or 76.7, the designated representative may submit a request and the permitting authority may grant, by administrative amendment under § 72.83 of this chapter, an extension of the demonstration period for such period of time (not to exceed 12 months) as may be necessary to implement such modifications or upgrades.

(C) If the approved interim alternative emission limitation applies to a unit for part, but not all, of a calendar year, the unit shall determine compliance for the calendar year in accordance with the procedures in § 76.13(a).

(ii) *Operating requirements.* (A) A unit with an approved alternative emission limitation demonstration period shall be operated under load dispatch conditions consistent with the operating conditions upon which the design of the NO_X emission control system and performance guarantee were based, and in accordance with the demonstration period plan.

(B) A unit with an approved alternative emission limitation demonstration period shall install all NO_X emission control systems, make any operational modifications, and complete any upgrades and maintenance to equipment specified in the approved demonstration period plan for optimizing NO_X emission reduction performance.

(C) When the owner or operator identifies boiler or NO_X emission control system operating modifications that would produce higher NO_X emission reductions, enabling the affected unit to comply with, or bring its emission rate closer to, the applicable emission limitation under § 76.5, 76.6, or 76.7, the designated representative shall submit an administrative amendment under § 72.83 of this chapter to revise the unit's Acid Rain permit and demonstration period plan to include such modifications.

(iii) *Testing requirements.* A unit with an approved alternative emission limitation demonstration period shall monitor in accordance with part 75 of this chapter and shall conduct all tests required under the approved demonstration period plan.

(2) *Final alternative emission limitation*—(i) *Emission limitations.* (A) Each unit with an approved alternative emission limitation shall comply with the alternative emission limitation specified in the unit's permit beginning on the date specified in the permit as

issued or revised by the permitting authority to apply the final alternative emission limitation.

(B) If the approved interim or final alternative emission limitation applies to a unit for part, but not all, of a calendar year, the unit shall determine compliance for the calendar year in accordance with the procedures in §76.13(a).

[60 FR 18761, Apr. 13, 1995, as amended at 61 FR 67163, Dec. 19, 1996]

§76.11 Emissions averaging.

(a) *General provisions*. In lieu of complying with the applicable emission limitation in §76.5, 76.6, or 76.7, any affected units subject to such emission limitation, under control of the same owner or operator, and having the same designated representative may average their NO_X emissions under an averaging plan approved under this section.

(1) Each affected unit included in an averaging plan for Phase I shall be a Phase I unit with a Group 1 boiler subject to an emission limitation in §76.5 during all years for which the unit is included in the plan.

(i) If a unit with an approved NO_X compliance extension is included in an averaging plan for 1996, the unit shall be treated, for the purposes of applying Equation 1 in paragraph (a)(6) of this section and Equation 2 in paragraph (d)(1)(ii)(A) of this section, as subject to the applicable emissions limitation under §76.5 for the entire year 1996.

(ii) A Phase II unit approved for early election under §76.8 shall not be included in an averaging plan for Phase I.

(2) Each affected unit included in an averaging plan for Phase II shall be a boiler subject to an emission limitation in §76.5, 76.6, or 76.7 for all years for which the unit is included in the plan.

(3) Each unit included in an averaging plan shall have an alternative contemporaneous annual emission limitation (lb/mmBtu) and can only be included in one averaging plan.

(4) Each unit included in an averaging plan shall have a minimum allowable annual heat input value (mmBtu), if it has an alternative contemporaneous annual emission limitation more stringent than that unit's applicable emission limitation under §76.5, 76.6, or 76.7, and a maximum allowable annual heat input value, if it has an alternative contemporaneous annual emission limitation less stringent than that unit's applicable emission limitation under §76.5, 76.6, or 76.7.

(5) The Btu-weighted annual average emission rate for the units in an averaging plan shall be less than or equal to the Btu-weighted annual average emission rate for the same units had they each been operated, during the same period of time, in compliance with the applicable emission limitations in §76.5, 76.6, or 76.7.

(6) In order to demonstrate that the proposed plan is consistent with paragraph (a)(5) of this section, the alternative contemporaneous annual emission limitations and annual heat input values assigned to the units in the proposed averaging plan shall meet the following requirement:

$$\frac{\sum_{i=1}^{n}\left(R_{Li} \times HI_i\right)}{\sum_{i=1}^{n} HI_i} \leq \frac{\sum_{i=1}^{n}\left(R_{li} \times HI_i\right)}{\sum_{i=1}^{n} HI_i} \qquad \text{(Equation 1)}$$

where:

R_{Li} = Alternative contemporaneous annual emission limitation for unit i, lb/mmBtu, as specified in the averaging plan;

R_{li} = Applicable emission limitation for unit i, lb/mmBtu, as specified in §76.5, 76.6, or 76.7 except that for early election units, which may be included in an averaging plan only on or after January 1, 2000, R_{li} shall equal the most stringent applicable emission limitation under §76.5 or 76.7;

HI_i = Annual heat input for unit i, mmBtu, as specified in the averaging plan;
n = Number of units in the averaging plan.

(7) For units with an alternative emission limitation, R_{li} shall equal the applicable emissions limitation under § 76.5, 76.6, or 76.7, not the alternative emissions limitation.

(8) No unit may be included in more than one averaging plan.

(b)(1) *Submission requirements.* The designated representative of a unit meeting the requirements of paragraphs (a)(1), (a)(2), and (a)(8) of this section may submit an averaging plan (or a revision to an approved averaging plan) to the permitting authority(ies) at any time up to and including January 1 (or July 1, if the plan is restricted to units located within a single permitting authority's jurisdiction) of the calendar year for which the averaging plan is to become effective.

(2) The designated representative shall submit a copy of the same averaging plan (or the same revision to an approved averaging plan) to each permitting authority with jurisdiction over a unit in the plan.

(3) When an averaging plan (or a revision to an approved averaging plan) is not approved, the owner or operator of each unit in the plan shall operate the unit in compliance with the emission limitation that would apply in the absence of the averaging plan (or revision to a plan).

(c) *Contents of NO_X averaging plan.* A complete NO_X averaging plan shall include the following elements in a format prescribed by the Administrator:

(1) Identification of each unit in the plan;

(2) Each unit's applicable emission limitation in § 76.5, 76.6, or 76.7;

(3) The alternative contemporaneous annual emission limitation for each unit (in lb/mmBtu). If any of the units identified in the NO_X averaging plan utilize a common stack pursuant to § 75.17(a)(2)(i)(B) of this chapter, the same alternative contemporaneous emission limitation shall be assigned to each such unit and different heat input limits may be assigned;

(4) The annual heat input limit for each unit (in mmBtu);

(5) The calculation for Equation 1 in paragraph (a)(6) of this section;

(6) The calendar years for which the plan will be in effect; and

(7) The special provisions in paragraph (d)(1) of this section.

(d) *Special provisions*—(1) *Emission limitations.* Each affected unit in an approved averaging plan is in compliance with the Acid Rain emission limitation for NO_X under the plan only if the following requirements are met:

(i) For each unit, the unit's actual annual average emission rate for the calendar year, in lb/mmBtu, is less than or equal to its alternative contemporaneous annual emission limitation in the averaging plan; and

(A) For each unit with an alternative contemporaneous emission limitation less stringent than the applicable emission limitation in § 76.5, 76.6, or 76.7, the actual annual heat input for the calendar year does not exceed the annual heat input limit in the averaging plan;

(B) For each unit with an alternative contemporaneous annual emission limitation more stringent than the applicable emission limitation in § 76.5, 76.6, or 76.7, the actual annual heat input for thecalendar year is not less than the annual heat input limit in the averaging plan; or

(ii) If one or more of the units does not meet the requirements under paragraph (d)(1)(i) of this section, the designated representative shall demonstrate, in accordance with paragraph (d)(1)(ii)(A) of this section (Equation 2) that the actual Btu-weighted annual average emission rate for the units in the plan is less than or equal to the Btu-weighted annual average rate for the same units had they each been operated, during the same period of time, in compliance with the applicable emission limitations in § 76.5, 76.6, or 76.7.

(A) A group showing of compliance shall be made based on the following equation:

$$\frac{\sum_{i=1}^{n}\left(R_{ai} \times HI_{ai}\right)}{\sum_{i=1}^{n} HI_{ai}} \leq \frac{\sum_{i=1}^{n}\left(R_{li} \times HI_{ai}\right)}{\sum_{i=1}^{n} HI_{ai}} \qquad \text{(Equation 2)}$$

where:

R_{ai} = Actual annual average emission rate for unit i, lb/mmBtu, as determined using the procedures in part 75 of this chapter. For units in an averaging plan utilizing a common stack pursuant to §75.17(a)(2)(i)(B) of this chapter, use the same NO_X emission rate value for each unit utilizing the common stack, and calculate this value in accordance with appendix F to part 75 of this chapter;

R_{li} = Applicable annual emission limitation for unit i lb/mmBtu, as specified in §76.5, 76.6, or 76.7, except that for early election units, which may be included in an averaging plan only on or after January 1, 2000, R_{li} shall equal the most stringent applicable emission limitation under §76.5 or 76.7;

HI_{ai} = Actual annual heat input for unit i, mmBtu, as determined using the procedures in part 75 of this chapter;

n = Number of units in the averaging plan.

(B) For units with an alternative emission limitation, R_{li} shall equal the applicable emission limitation under §76.5, 76.6, or 76.7, not the alternative emission limitation.

(C) If there is a successful group showing of compliance under paragraph (d)(1)(ii)(A) of this section for a calendar year, then all units in the averaging plan shall be deemed to be in compliance for that year with their alternative contemporaneous emission limitations and annual heat input limits under paragraph (d)(1)(i) of this section.

(2) *Liability*. The owners and operators of a unit governed by an approved averaging plan shall be liable for any violation of the plan or this section at that unit or any other unit in the plan, including liability for fulfilling the obligations specified in part 77 of this chapter and sections 113 and 411 of the Act.

(3) *Withdrawal or termination*. The designated representative may submit a notification to terminate an approved averaging plan in accordance with §72.40(d) of this chapter, no later than October 1 of the calendar year for which the plan is to be withdrawn or terminated.

§76.12 Phase I NO_X compliance extension.

(a) *General provisions*. (1) The designated representative of a Phase I unit with a Group 1 boiler may apply for and receive a 15-month extension of the deadline for meeting the applicable emissions limitation under §76.5 where it is demonstrated, to the satisfaction of the Administrator, that:

(i) The low NO_X burner technology designed to meet the applicable emission limitation is not in adequate supply to enable installation and operation at the unit, consistent with system reliability, by January 1, 1995 and the reliability problems are due substantially to NO_X emission control system installation and availability; or

(ii) The unit is participating in an approved clean coal technology demonstration project.

(2) In order to obtain a Phase I NO_X compliance extension, the designated representative shall submit a Phase I NO_X compliance extension plan by October 1, 1994.

(b) *Contents of Phase I NO_X compliance extension plan*. A complete Phase I NO_X compliance extension plan shall include the following elements in a format prescribed by the Administrator:

(1) Identification of the unit.

(2) For units applying pursuant to paragraph (a)(1)(i) of this section:

(i) A list of the company names, addresses, and telephone numbers of vendors who are qualified to provide the services and low NO_X burner technology designed to meet the applicable emission limitation under §76.5 and have been contacted to obtain the required services and technology. The list shall include the dates of contact, and a copy of each request for bids shall be submitted, along with any other information necessary to show a

good-faith effort to obtain the required services and technology necessary to meet the requirements of this part on or before January 1, 1995.

(ii) A copy of those portions of a legally binding contract with a qualified vendor that demonstrate that services and low NO_X burner technology designed to meet the applicable emission limitation under § 76.5, with a completion date not later than December 31, 1995 have been contracted for.

(iii) Scheduling information, including justification and test schedules.

(iv) To demonstrate, if applicable, that the supply of the low NO_X burner technology designed to meet the applicable emission limitation under § 76.5 is inadequate to enable its installation and operation at the unit, consistent with system reliability, in time for the unit to comply with the applicable emission limitation on or before January 1, 1995, either:

(A) Certification from the selected vendor(s) (by a certifying official) listed in paragraph (b)(2)(i) of this section stating that they cannot provide the necessary services and install the low NO_X burner technology on or before January 1, 1995 and explaining the reasons why the services cannot be provided and why the equipment cannot be installed in a timely manner; or

(B) The following information:

(i) Standard load forecasts, based on standard forecasting models available throughout the utility industry and applied to the period, January 1, 1993, through December 31, 1994.

(ii) Specific reasons why an outage cannot be scheduled to enable the unit to install and operate the low NO_X burner technology by January 1, 1995, including reasons why no other units can be used to replace this unit's generation during such outage.

(iii) Fuel and energy balance summaries and power and other consumption requirements (including those for air, steam, and cooling water).

(3) To demonstrate, if applicable, participation in an approved clean coal technology demonstration project, a description of the project, including all sources of Federal, State, and other outside funding, amount and date for approval of Federal funding, the duration of the project, and the anticipated completion date of the project.

(4) The special provisions in paragraph (d) of this section.

(c)(1) *Administrator's action.* To the extent the Administrator determines that a Phase I NO_X compliance extension plan complies with the requirements of this section, the Administrator will approve the plan and revise the Acid Rain permit governing the unit in the plan in order to incorporate the plan by administrative amendment under § 72.83 of this chapter, except that the Administrator shall have 90 days from receipt of the compliance extension plan to take final action.

(2) The Administrator will approve or disapprove a proposed NO_X compliance extension plan within 3 months of receipt.

(d) *Special provisions.* (1) Emission limitations. The unit shall comply with the applicable emission limitation under § 76.5 beginning April 1, 1996. Compliance shall be determined as specified in part 75 of this chapter using measured values of NO_X emissions and heat input only for the portion of the year that the emission limit is in effect.

(2) If a unit with an approved NO_X compliance extension is included in an averaging plan under § 76.11 for year 1996, the unit shall be treated, for purposes of applying Equation 1 in § 76.11(a)(6) and Equation 2 in § 76.11(d)(1)(ii)(A), as subject to the applicable emission limitation under § 76.5 for the entire year 1996.

(e) *Extension until December 31, 1997.* (1) The designated representative of a Phase I unit that is subject to section 404(d) of the Act, has a tangentially fired boiler, and is unable to install low NO_X burner technology by January 1, 1997 may submit a petition for and receive an extension for meeting the applicable emission limitation under § 76.5 where it is demonstrated, to the satisfaction of the Administrator, that:

(i) The unit is located at a source with two or more other units, all of which are Phase I units that are subject to section 404(d) of the Act and have tangentially fired boilers;

(ii) The NO_X control system at the unit was scheduled to be installed by

January 1, 1997 and, because of operational problems associated with the NO_X control system, will be redesigned; and

(iii) Installation of the redesigned low NO_X burner technology at the unit cannot be completed by January 1, 1997 without causing system reliability problems.

(2) A complete petition shall include the following elements and shall be submitted by April 28, 1995.

(i) Identification of the unit and the other units at the source;

(ii) A statement describing how the requirements of paragraphs (e)(1)(ii) and (e)(1)(iii) of this section are met;

(iii) The earliest date, not later than December 31, 1997, by which installation of the redesigned low NO_X burner technology can be completed consistent with system reliability; and

(iv) The provisions in paragraph (e)(4) of this section.

(3) To the extent the Administrator determines that a Phase I unit meets the requirements of paragraphs (e)(1) and (e)(2) of this section, the Administrator will approve the petition within 90 days from receipt of the complete petition. The Acid Rain permit governing the unit will be revised in order to incorporate the approved extension, which shall terminate no later than December 31, 1997, by administrative amendment under §72.83 of this chapter except that the Administrator will have 90 days to take final action.

(4) The unit shall comply with the applicable emission limitation under §76.5 beginning on the day immediately following the day on which the extension approved under paragraph (e)(3) of this section terminates. Compliance shall be determined as specified in part 75 of this chapter using measured values of NO_X emissions and heat input only for the portion of the year that the emission limit is in effect. If a unit with an approved extension is included in an averaging plan under §76.11 for year 1997, the unit shall be treated, for the purpose of applying Equation 1 in §76.11(a)(6) and Equation 2 in §76.11(d)(1)(ii)(A), as subject to the applicable emission limitation under §76.5 for the entire year 1997.

§76.13 Compliance and excess emissions.

Excess emissions of nitrogen oxides under §77.6 of this chapter shall be calculated as follows:

(a) For a unit that is not in an approved averaging plan:

(1) Calculate EE_i for each portion of the calendar year that the unit is subject to a different NO_X emission limitation:

$$EE_i = \frac{(R_{ai} - R_{li}) \times HI_i}{2000} \qquad \text{(Equation 3)}$$

where:

EE_i = Excess emissions for NO_X for the portion of the calendar year (in tons);

R_{ai} = Actual average emission rate for the unit (in lb/mmBtu), determined according to part 75 of this chapter for the portion of the calendar year for which the applicable emission limitation R_l is in effect;

R_{li} = Applicable emission limitation for the unit, (in lb/mmBtu), as specified in §76.5, 76.6, or 76.7 or as determined under §76.10;

$$EE = \sum_{i=1}^{n} EE_i \qquad \text{(Equation 4)}$$

HI^i = Actual heat input for the unit, (in mmBtu), determined according to part 75 of this chapter for the portion of the calendar year for which the applicable emission limitation, R_l, is in effect.

(2) If EE_i is a negative number for any portion of the calendar year, the EE value for that portion of the calendar year shall be equal to zero (e.g., if $EE_i = -100$, then $EE_i = 0$).

(3) Sum all EE_i values for the calendar year:

where:

EE = Excess emissions for NO_X for the year (in tons);

n = The number of time periods during which a unit is subject to different emission limitations; and

(b) For units participating in an approved averaging plan, when all the requirements under §76.11(d)(1) are not met,

$$EE = \frac{\sum_{i=1}^{n}\left(R_{ai} \times HI_i\right) - \sum_{i=1}^{n}\left(R_{li} \times HI_i\right)}{2000} \qquad \text{(Equation 5)}$$

where:

EE = Excess emissions for NO_X for the year (in tons);

R_{ai} = Actual annual average emission rate for NO_X for unit i, (in lb/mmBtu), determined according to part 75 of this chapter;

R_{li} = Applicable emission limitation for unit i, (in lb/mmBtu), as specified in § 76.5, 76.6, or 76.7;

HI_i = Actual annual heat input for unit i, mmBtu, determined according to part 75 of this chapter;

n = Number of units in the averaging plan.

§ 76.14 Monitoring, recordkeeping, and reporting.

(a) A petition for an alternative emission limitation demonstration period under § 76.10(d) shall include the following information:

(1) In accordance with § 76.10(d)(4), the following information:

(i) Documentation that the owner or operator solicited bids for a NO_X emission control system designed for application to the specific boiler and designed to achieve the applicable emission limitation in § 76.5, 76.6, or 76.7 on an annual average basis. This documentation must include a copy of all bid specifications.

(ii) A copy of the performance guarantee submitted by the vendor of the installed NO_X emission control system to the owner or operator showing that such system was designed to meet the applicable emission limitation in § 76.5, 76.6, or 76.7 on an annual average basis.

(iii) Documentation describing the operational and combustion conditions that are the basis of the performance guarantee.

(iv) Certification by the primary vendor of the NO_X emission control system that such equipment and associated auxiliary equipment was properly installed according to the modifications and procedures specified by the vendor.

(v) Certification by the designated representative that the owner(s) or operator installed technology that meets the requirements of § 76.10(a)(2).

(2) In accordance with § 76.10(d)(9), the following information:

(i) The operating conditions of the NO_X emission control system including load range, O_2 range, coal volatile matter range, and, for tangentially fired boilers, distribution of combustion air within the NO_X emission control system;

(ii) Certification by the designated representative that the owner(s) or operator have achieved and are following the operating conditions, boiler modifications, and upgrades that formed the basis for the system design and performance guarantee;

(iii) Any planned equipment modifications and upgrades for the purpose of achieving the maximum NO_X reduction performance of the NO_X emission control system that were not included in the design specifications and performance guarantee, but that were achieved prior to submission of this application and are being followed;

(iv) A list of any modifications or replacements of equipment that are to be done prior to the completion of the demonstration period for the purpose of reducing emissions of NO_X; and

(v) The parametric testing that will be conducted to determine the reason or reasons for the failure of the unit to achieve the applicable emission limitation and to verify the proper operation of the installed NO_X emission control system during the demonstration period. The tests shall include tests in § 76.15, which may be modified as follows:

(A) The owner or operator of the unit may add tests to those listed in § 76.15, if such additions provide data relevant to the failure of the installed NO_X emission control system to meet the applicable emissions limitation in § 76.5, 76.6, or 76.7; or

(B) The owner or operator of the unit may remove tests listed in § 76.15 that are shown, to the satisfaction of the

permitting authority, not to be relevant to NO_X emissions from the affected unit; and

(C) In the event the performance guarantee or the NO_X emission control system specifications require additional tests not listed in § 76.15, or specify operating conditions not verified by tests listed in § 76.15, the owner or operator of the unit shall include such additional tests.

(3) In accordance with § 76.10(d)(10), the following information for the operating period:

(i) The average NO_X emission rate (in lb/mmBtu) of the specific unit;

(ii) The highest hourly NO_X emission rate (in lb/mmBtu) of the specific unit;

(iii) Hourly NO_X emission rate (in lb/mmBtu), calculated in accordance with part 75 of this chapter;

(iv) Total heat input (in mmBtu) for the unit for each hour of operation, calculated in accordance with the requirements of part 75 of this chapter; and

(v) Total integrated hourly gross unit load (in MWge).

(b) A petition for an alternative emission limitation shall include the following information in accordance with § 76.10(e)(6).

(1) Total heat input (in mmBtu) for the unit for each hour of operation, calculated in accordance with the requirements of part 75 of this chapter;

(2) Hourly NO_X emission rate (in lb/mmBtu), calculated in accordance with the requirements of part 75 of this chapter; and

(3) Total integrated hourly gross unit load (MWge).

(c) *Reporting of the costs of low NO_X burner technology applied to Group 1, Phase I boilers.* (1) Except as provided in paragraph (c)(2) of this section, the designated representative of a Phase I unit with a Group 1 boiler that has installed or is installing any form of low NO_X burner technology shall submit to the Administrator a report containing the capital cost, operating cost, and baseline and post-retrofit emission data specified in appendix B to this part. If any of the required equipment, cost, and schedule information are not available (e.g., the retrofit project is still underway), the designated representative shall include in the report detailed cost estimates and other projected or estimated data in lieu of the information that is not available.

(2) The report under paragraph (c)(1) of this section is not required with regard to the following types of Group 1, Phase I units:

(i) Units employing no new NO_X emission control system after November 15, 1990;

(ii) Units employing modifications to boiler operating parameters (e.g., burners out of service or fuel switching) without low NO_X burners or other emission reduction equipment for reducing NO_X emissions;

(iii) Units with wall-fired boilers employing only overfire air and units with tangentially fired boilers employing only separated overfire air; or

(iv) Units beginning installation of a new NO_X emission control system after August 11, 1995.

(3) The report under paragraph (c)(1) of this section shall be submitted to the Administrator by:

(i) 120 days after completion of the low NO_X burner technology retrofit project; or

(ii) May 23, 1995, if the project was completed on or before January 23, 1995.

§ 76.15 Test methods and procedures.

(a) The owner or operator may use the following tests as a basis for the report required by § 76.10(e)(7):

(1) Conduct an ultimate analysis of coal using ASTM D 3176–89 (incorporated by reference as specified in § 76.4);

(2) Conduct a proximate analysis of coal using ASTM D 3172–89 (incorporated by reference as specified in § 76.4); and

(3) Measure the coal mass flow rate to each individual burner using ASME Power Test Code 4.2 (1991), ''Test Code for Coal Pulverizers'' or ISO 9931 (1991), ''Coal—Sampling of Pulverized Coal Conveyed by Gases in Direct Fired Coal Systems'' (incorporated by reference as specified in § 76.4).

(b) The owner or operator may measure and record the actual NO_X emission rate in accordance with the requirements of this part while varying the following parameters where possible to

determine their effects on the emissions of NO_X from the affected boiler:

(1) Excess air levels;

(2) Settings of burners or coal and air nozzles, including tilt and yaw, or swirl;

(3) For tangentially fired boilers, distribution of combustion air within the NO_X emission control system;

(4) Coal mass flow rates to each individual burner;

(5) Coal-to-primary air ratio (based on pound per hour) for each burner, the average coal-to-primary air ratio for all burners, and the deviations of individual burners' coal-to-primary air ratios from the average value; and

(6) If the boiler uses varying types of coal, the type of coal. Provide the results of proximate and ultimate analyses of each type of as-fired coal.

(c) In performing the tests specified in paragraph (a) of this section, the owner or operator shall begin the tests using the equipment settings for which the NO_X emission control system was designed to meet the NO_X emission rate guaranteed by the primary NO_X emission control system vendor. These results constitute the ''baseline controlled'' condition.

(d) After establishing the baseline controlled condition under paragraph (c) of this section, the owner or operator may:

(1) Change excess air levels ±5 percent from the baseline controlled condition to determine the effects on emissions of NO_X, by providing a minimum of three readings (e.g., with a baseline reading of 20 percent excess air, excess air levels will be changed to 19 percent and 21 percent);

(2) For tangentially fired boilers, change the distribution of combustion air within the NO_X emission control system to determine the effects on NO_X emissions by providing a minimum of three readings, one with the minimum, one with the baseline, and one with the maximum amounts of staged combustion air; and

(3) Show that the combustion process within the boiler is optimized (e.g., that the burners are balanced).

Appendix A to Part 76—Phase I Affected Coal-Fired Utility Units With Group 1 or Cell Burner Boilers

Table 1—Phase I Tangentially Fired Units

State	Plant	Unit	Operator
ALABAMA	EC GASTON	5	ALABAMA POWER CO.
GEORGIA	BOWEN	1BLR	GEORGIA POWER CO.
GEORGIA	BOWEN	2BLR	GEORGIA POWER CO.
GEORGIA	BOWEN	3BLR	GEORGIA POWER CO.
GEORGIA	BOWEN	4BLR	GEORGIA POWER CO.
GEORGIA	JACK MCDONOUGH	MB1	GEORGIA POWER CO.
GEORGIA	JACK MCDONOUGH	MB2	GEORGIA POWER CO.
GEORGIA	WANSLEY	1	GEORGIA POWER CO.
GEORGIA	WANSLEY	2	GEORGIA POWER CO.
GEORGIA	YATES	Y1BR	GEORGIA POWER CO.
GEORGIA	YATES	Y2BR	GEORGIA POWER CO.
GEORGIA	YATES	Y3BR	GEORGIA POWER CO.
GEORGIA	YATES	Y4BR	GEORGIA POWER CO.
GEORGIA	YATES	Y5BR	GEORGIA POWER CO.
GEORGIA	YATES	Y6BR	GEORGIA POWER CO.
GEORGIA	YATES	Y7BR	GEORGIA POWER CO.
ILLINOIS	BALDWIN	3	ILLINOIS POWER CO.
ILLINOIS	HENNEPIN	2	ILLINOIS POWER CO.
ILLINOIS	JOPPA	1	ELECTRIC ENERGY INC.
ILLINOIS	JOPPA	2	ELECTRIC ENERGY INC.
ILLINOIS	JOPPA	3	ELECTRIC ENERGY INC.
ILLINOIS	JOPPA	4	ELECTRIC ENERGY INC.
ILLINOIS	JOPPA	5	ELECTRIC ENERGY INC.
ILLINOIS	JOPPA	6	ELECTRIC ENERGY INC.
ILLINOIS	MEREDOSIA	5	CEN ILLINOIS PUB SER.
ILLINOIS	VERMILION	2	ILLINOIS POWER CO.
INDIANA	CAYUGA	1	PSI ENERGY INC.
INDIANA	CAYUGA	2	PSI ENERGY INC.
INDIANA	EW STOUT	50	INDIANAPOLIS PWR & LT.
INDIANA	EW STOUT	60	INDIANAPOLIS PWR & LT.
INDIANA	EW STOUT	70	INDIANAPOLIS PRW & LT.

TABLE 1—PHASE I TANGENTIALLY FIRED UNITS—Continued

State	Plant	Unit	Operator
INDIANA	HT PRITCHARD	6	INDIANAPOLIS PWR & LT.
INDIANA	PETERSBURG	1	INDIANAPOLIS PWR & LT.
INDIANA	PETERSBURG	2	INDIANAPOLIS PWR & LT.
INDIANA	WABASH RIVER	6	PSI ENERGY INC.
IOWA	BURLINGTON	1	IOWA SOUTHERN UTL.
IOWA	ML KAPP	2	INTERSTATE POWER CO.
IOWA	RIVERSIDE	9	IOWA-ILL GAS & ELEC.
KENTUCKY	ELMER SMITH	2	OWENSBORO MUN UTIL.
KENTUCKY	EW BROWN	2	KENTUCKY UTL CO.
KENTUCKY	EW BROWN	3	KENTUCKY UTL CO.
KENTUCKY	GHENT	1	KENTUCKY UTL CO.
MARYLAND	MORGANTOWN	1	POTOMAC ELEC PWR CO.
MARYLAND	MORGANTOWN	2	POTOMAC ELEC PWR CO.
MICHIGAN	JH CAMPBELL	1	CONSUMERS POWER CO.
MISSOURI	LABADIE	1	UNION ELECTRIC CO.
MISSOURI	LABADIE	2	UNION ELECTRIC CO.
MISSOURI	LABADIE	3	UNION ELECTRIC CO.
MISSOURI	LABADIE	4	UNION ELECTRIC CO.
MISSOURI	MONTROSE	1	KANSAS CITY PWR & LT.
MISSOURI	MONTROSE	2	KANSAS CITY PWR & LT.
MISSOURI	MONTROSE	3	KANSAS CITY PWR & LT.
NEW YORK	DUNKIRK	3	NIAGARA MOHAWK PWR.
NEW YORK	DUNKIRK	4	NIAGARA MOHAWK PWR.
NEW YORK	GREENIDGE	6	NY STATE ELEC & GAS.
NEW YORK	MILLIKEN	1	NY STATE ELEC & GAS.
NEW YORK	MILLIKEN	2	NY STATE ELEC & GAS.
OHIO	ASHTABULA	7	CLEVELAND ELEC ILLUM.
OHIO	AVON LAKE	11	CLEVELAND ELEC ILLUM.
OHIO	CONESVILLE	4	COLUMBUS STHERN PWR.
OHIO	EASTLAKE	1	CLEVELAND ELEC ILLUM.
OHIO	EASTLAKE	2	CLEVELAND ELEC ILLUM.
OHIO	EASTLAKE	3	CLEVELAND ELEC ILLUM.
OHIO	EASTLAKE	4	CLEVELAND ELEC ILLUM.
OHIO	MIAMI FORT	6	CINCINNATI GAS & ELEC.
OHIO	WC BECKJORD	5	CINCINNATI GAS & ELEC.
OHIO	WC BECKJORD	6	CINCINNATI GAS & ELEC.
PENNSYLVANIA	BRUNNER ISLAND	1	PENNSYLVANIA PWR & LT.
PENNSYLVANIA	BRUNNER ISLAND	2	PENNSYLVANIA PWR & LT.
PENNSYLVANIA	BRUNNER ISLAND	3	PENNSYLVANIA PWR & LT.
PENNSYLVANIA	CHESWICK	1	DUQUESNE LIGHT CO.
PENNSYLVANIA	CONEMAUGH	1	PENNSYLVANIA ELEC CO.
PENNSYLVANIA	CONEMAUGH	2	PENNSYLVANIA ELEC CO.
PENNSYLVANIA	PORTLAND	1	METROPOLITAN EDISON.
PENNSYLVANIA	PORTLAND	2	METROPOLITAN EDISON.
PENNSYLVANIA	SHAWVILLE	3	PENNSYLVANIA ELEC CO.
PENNSYLVANIA	SHAWVILLE	4	PENNSYLVANIA ELEC CO.
TENNESSEE	GALLATIN	1	TENNESSEE VAL AUTH.
TENNESSEE	GALLATIN	2	TENNESSEE VAL AUTH.
TENNESSEE	GALLATIN	3	TENNESSEE VAL AUTH.
TENNESSEE	GALLATIN	4	TENNESSEE VAL AUTH.
TENNESSEE	JOHNSONVILLE	1	TENNESSEE VAL AUTH.
TENNESSEE	JOHNSONVILLE	2	TENNESSEE VAL AUTH.
TENNESSEE	JOHNSONVILLE	3	TENNESSEE VAL AUTH.
TENNESSEE	JOHNSONVILLE	4	TENNESSEE VAL AUTH.
TENNESSEE	JOHNSONVILLE	5	TENNESSEE VAL AUTH.
TENNESSEE	JOHNSONVILLE	6	TENNESSEE VAL AUTH.
WEST VIRGINIA	ALBRIGHT	3	MONONGAHELA POWER CO.
WEST VIRGINIA	FORT MARTIN	1	MONONGAHELA POWER CO.
WEST VIRGINIA	MOUNT STORM	1	VIRGINIA ELEC & PWR.
WEST VIRGINIA	MOUNT STORM	2	VIRGINIA ELEC & PWR.
WEST VIRGINIA	MOUNT STORM	3	VIRGINIA ELEC & PWR.
WISCONSIN	GENOA	1	DAIRYLAND POWER COOP.
WISCONSIN	SOUTH OAK CREEK	7	WISCONSIN ELEC POWER.
WISCONSIN	SOUTH OAK CREEK	8	WISCONSIN ELEC POWER.

TABLE 2—PHASE I DRY BOTTOM-FIRED UNITS

State	Plant	Unit	Operator
ALABAMA	COLBERT	1	TENNESSEE VAL AUTH.
ALABAMA	COLBERT	2	TENNESSEE VAL AUTH.

TABLE 2—PHASE I DRY BOTTOM-FIRED UNITS—Continued

State	Plant	Unit	Operator
ALABAMA	COLBERT	3	TENNESSEE VAL AUTH.
ALABAMA	COLBERT	4	TENNESSEE VAL AUTH.
ALABAMA	COLBERT	5	TENNESSEE VAL AUTH.
ALABAMA	EC GASTON	1	ALABAMA POWER CO.
ALABAMA	EC GASTON	2	ALABAMA POWER CO.
ALABAMA	EC GASTON	3	ALABAMA POWER CO.
ALABAMA	EC GASTON	4	ALABAMA POWER CO.
FLORIDA	CRIST	6	GULF POWER CO.
FLORIDA	CRIST	7	GULF POWER CO.
GEORGIA	HAMMOND	1	GEORGIA POWER CO.
GEORGIA	HAMMOND	2	GEORGIA POWER CO.
GEORGIA	HAMMOND	3	GEORGIA POWER CO.
GEORGIA	HAMMOND	4	GEORGIA POWER CO.
ILLINOIS	GRAND TOWER	9	CEN ILLINOIS PUB SER.
INDIANA	CULLEY	2	STHERN IND GAS & EL.
INDIANA	CULLEY	3	STHERN IND GAS & EL.
INDIANA	GIBSON	1	PSI ENERGY INC.
INDIANA	GIBSON	2	PSI ENERGY INC.
INDIANA	GIBSON	3	PSI ENERGY INC.
INDIANA	GIBSON	4	PSI ENERGY INC.
INDIANA	RA GALLAGHER	1	PSI ENERGY INC.
INDIANA	RA GALLAGHER	2	PSI ENERGY INC.
INDIANA	RA GALLAGHER	3	PSI ENERGY INC.
INDIANA	RA GALLAGHER	4	PSI ENERGY INC.
INDIANA	FRANK E RATTS	1SG1	HOOSIER ENERGY REC.
INDIANA	FRANK E RATTS	2SG1	HOOSIER ENERGY REC.
INDIANA	WABASH RIVER	1	PSI ENERGY INC.
INDIANA	WABASH RIVER	2	PSI ENERGY INC.
INDIANA	WABASH RIVER	3	PSI ENERGY INC.
INDIANA	WABASH RIVER	5	PSI ENERGY INC.
IOWA	DES MOINES	11	IOWA PWR & LT CO.
IOWA	PRAIRIE CREEK	4	IOWA ELEC LT & PWR.
KANSAS	QUINDARO	2	KS CITY BD PUB UTIL.
KENTUCKY	COLEMAN	C1	BIG RIVERS ELEC CORP.
KENTUCKY	COLEMAN	C2	BIG RIVERS ELEC CORP.
KENTUCKY	COLEMAN	C3	BIG RIVERS ELEC CORP.
KENTUCKY	EW BROWN	1	KENTUCKY UTL CO.
KENTUCKY	GREEN RIVER	5	KENTUCKY UTL CO.
KENTUCKY	HMP&L STATION 2	H1	BIG RIVERS ELEC CORP.
KENTUCKY	HMP&L STATION 2	H2	BIG RIVERS ELEC CORP.
KENTUCKY	HL SPURLOCK	1	EAST KY PWR COOP.
KENTUCKY	JS COOPER	1	EAST KY PWR COOP.
KENTUCKY	JS COOPER	2	EAST KY PWR COOP.
MARYLAND	CHALK POINT	1	POTOMAC ELEC PWR CO.
MARYLAND	CHALK POINT	2	POTOMAC ELEC PWR CO.
MINNESOTA	HIGH BRIDGE	6	NORTHERN STATES PWR.
MISSISSIPPI	JACK WATSON	4	MISSISSIPPI PWR CO.
MISSISSIPPI	JACK WATSON	5	MISSISSIPPI PWR CO.
MISSOURI	JAMES RIVER	5	SPRINGFIELD UTL.
OHIO	CONESVILLE	3	COLUMBUS STHERN PWR.
OHIO	EDGEWATER	13	OHIO EDISON CO.
OHIO	MIAMI FORT [1]	5–1	CINCINNATI GAS&ELEC.
OHIO	MIAMI FORT [1]	5–2	CINCINNATI GAS&ELEC.
OHIO	PICWAY	9	COLUMBUS STHERN PWR.
OHIO	RE BURGER	7	OHIO EDISON CO.
OHIO	RE BURGER	8	OHIO EDISON CO.
OHIO	WH SAMMIS	5	OHIO EDISON CO.
OHIO	WH SAMMIS	6	OHIO EDISON CO.
PENNSYLVANIA	ARMSTRONG	1	WEST PENN POWER CO.
PENNSYLVANIA	ARMSTRONG	2	WEST PENN POWER CO.
PENNSYLVANIA	MARTINS CREEK	1	PENNSYLVANIA PWR & LT.
PENNSYLVANIA	MARTINS CREEK	2	PENNSYLVANIA PWR & LT.
PENNSYLVANIA	SHAWVILLE	1	PENNSYLVANIA ELEC CO.
PENNSYLVANIA	SHAWVILLE	2	PENNSYLVANIA ELEC CO.
PENNSYLVANIA	SUNBURY	3	PENNSYLVANIA PWR & LT.
PENNSYLVANIA	SUNBURY	4	PENNSYLVANIA PWR & LT.
TENNESSEE	JOHNSONVILLE	7	TENNESSEE VAL AUTH.
TENNESSEE	JOHNSONVILLE	8	TENNESSEE VAL AUTH.
TENNESSEE	JOHNSONVILLE	9	TENNESSEE VAL AUTH.
TENNESSEE	JOHNSONVILLE	10	TENNESSEE VAL AUTH.
WEST VIRGINIA	HARRISON	1	MONONGAHELA POWER CO.
WEST VIRGINIA	HARRISON	2	MONONGAHELA POWER CO.

TABLE 2—PHASE I DRY BOTTOM-FIRED UNITS—Continued

State	Plant	Unit	Operator
WEST VIRGINIA	HARRISON	3	MONONGAHELA POWER CO.
WEST VIRGINIA	MITCHELL	1	OHIO POWER CO.
WEST VIRGINIA	MITCHELL	2	OHIO POWER CO.
WISCONSIN	JP PULLIAM	8	WISCONSIN PUB SER CO.
WISCONSIN	NORTH OAK CREEK[2]	1	WISCONSIN ELEC PWR.
WISCONSIN	NORTH OAK CREEK[2]	2	WISCONSIN ELEC PWR.
WISCONSIN	NORTH OAK CREEK[2]	3	WISCONSIN ELEC PWR.
WISCONSIN	NORTH OAK CREEK[2]	4	WISCONSIN ELEC PWR.
WISCONSIN	SOUTH OAK CREEK[2]	5	WISCONSIN ELEC PWR.
WISCONSIN	SOUTH OAK CREEK[2]	6	WISCONSIN ELEC PWR.

[1] Vertically fired boiler.
[2] Arch-fired boiler.

TABLE 3—PHASE I CELL BURNER TECHNOLOGY UNITS

State	Plant	Unit	Operator
INDIANA	WARRICK	4	STHERN IND GAS & EL.
MICHIGAN	JH CAMPBELL	2	CONSUMERS POWER CO.
OHIO	AVON LAKE	12	CLEVELAND ELEC ILLUM.
OHIO	CARDINAL	1	CARDINAL OPERATING.
OHIO	CARDINAL	2	CARDINAL OPERATING.
OHIO	EASTLAKE	5	CLEVELAND ELEC ILLUM.
OHIO	GENRL JM GAVIN	1	OHIO POWER CO.
OHIO	GENRL JM GAVIN	2	OHIO POWER CO.
OHIO	MIAMI FORT	7	CINCINNATI GAS & EL.
OHIO	MUSKINGUM RIVER	5	OHIO POWER CO.
OHIO	WH SAMMIS	7	OHIO EDISON CO.
PENNSYLVANIA	HATFIELDS FERRY	1	WEST PENN POWER CO.
PENNSYLVANIA	HATFIELDS FERRY	2	WEST PENN POWER CO.
PENNSYLVANIA	HATFIELDS FERRY	3	WEST PENN POWER CO.
TENNESSEE	CUMBERLAND	1	TENNESSEE VAL AUTH.
TENNESSEE	CUMBERLAND	2	TENNESSEE VAL AUTH.
WEST VIRGINIA	FORT MARTIN	2	MONONGAHELA POWER CO.

APPENDIX B TO PART 76—PROCEDURES AND METHODS FOR ESTIMATING COSTS OF NITROGEN OXIDES CONTROLS APPLIED TO GROUP 1, BOILERS

1. PURPOSE AND APPLICABILITY

This technical appendix specifies the procedures, methods, and data that the Administrator will use in establishing ''***the degree of reduction achievable through this retrofit application of the best system of continuous emission reduction, taking into account available technology, costs, and energy and environmental impacts; and which is comparable to the costs of nitrogen oxides controls set pursuant to subsection (b)(1) (of section 407 of the Act).'' In developing the allowable NO_X emissions limitations for Group 2 boilers pursuant to subsection (b)(2) of section 407 of the Act, the Administrator will consider only those systems of continuous emission reduction that, when applied on a retrofit basis, are comparable in cost to the cost in constant dollars of low NO_X burner technology applied to Group 1, Phase I boilers.

The Administrator will evaluate the capital cost (in dollars per kilowatt electrical ($/kW)), the operating and maintenance costs (in $/year), and the cost-effectiveness (in annualized $/ton NO_X removed) of installed low NO_X burner technology controls over a range of boiler sizes (as measured by the gross electrical capacity of the associated generator in megawatt electrical (MW)) and utilization rates (in percent gross nameplate capacity on an annual basis) to develop estimates of the capital costs and cost effectiveness for Group 1, Phase I boilers. The following units will be excluded from these determinations of the capital costs and cost effectiveness of NO_X controls set pursuant to subsection (b)(1) of section 407 of the Act: (1) Units employing an alternative technology, or overfire air as applied to wall-fired boilers or separated overfire air as applied to tangentially fired boilers, in lieu of low NO_X burner technology for reducing NO_X emissions; (2) units employing no controls, only controls installed before November 15, 1990, or only modifications to boiler operating parameters (e.g., burners out of service or fuel switching) for reducing NO_X emissions; and (3) units that have not achieved the applicable emission limitation.

2. AVERAGE CAPITAL COST FOR LOW NO_X BURNER TECHNOLOGY APPLIED TO GROUP 1 BOILERS

The Administrator will use the procedures, methods, and data specified in this section to estimate the average capital cost (in $/kW) of installed low NO_X burner technology applied to Group 1 boilers.

2.1 Using cost data submitted pursuant to the reporting requirements in section 4 below, boiler-specific actual or estimated actual capital costs will be determined for each unit in the population specified in section 1 above for assessing the costs of installed low NO_X burner technology. The scope of installed low NO_X burner technology costs will include the following capital costs for retrofit application: (1) For the burner portion—burners or air and coal nozzles, burner throat and waterwall modifications, and windbox modifications; and, where applicable, (2) for the combustion air staging portion—waterwall modifications or panels, windbox modifications, and ductwork, and (3) scope adders or supplemental equipment such as replacement or additional fans, dampers, or ignitors necessary for the proper operation of the low NO_X burner technology. Capital costs associated with boiler restoration or refurbishment such as replacement of air heaters, asbestos abatement, and recasing will not be included in the cost basis for installed low NO_X burner technology. The scope of installed low NO_X burner technology retrofit capital costs will include materials, construction and installation labor, engineering, and overhead costs.

2.2 Using gross nameplate capacity (in MW) for each unit as reported in the National Allowance Data Base (NADB), boiler-specific capital costs will be converted to a $/kW basis.

2.3 Capital cost curves ($/kW versus boiler size in MW) or equations for installed low NO_X burner technology retrofit costs will be developed for: (1) Dry bottom wall fired boilers (excluding units applying cell burner technology) and (2) tangentially fired boilers.

3. [RESERVED]

4. REPORTING REQUIREMENTS

4.1 The following information is to be submitted by each designated representative of a Phase I affected unit subject to the reporting requirements of §76.14(c):

4.1.1 Schedule and dates for baseline testing, installation, and performance testing of low NO_X burner technology.

4.1.2 Estimates of the annual average baseline NO_X emission rate, as specified in section 3.1.1, and the annual average controlled NO_X emission rate, as specified in section 3.1.2, including the supporting continuous emission monitoring or other test data.

4.1.3 Copies of pre-retrofit and post-retrofit performance test reports.

4.1.4 Detailed estimates of the capital costs based on actual contract bids for each component of the installed low NO_X burner technology including the items listed in section 2.1. Indicate number of bids solicited. Provide a copy of the actual agreement for the installed technology.

4.1.5 Detailed estimates of the capital costs of system replacements or upgrades such as coal pipe changes, fan replacements/upgrades, or mill replacements/upgrades undertaken as part of the low NO_X burner technology retrofit project.

4.1.6 Detailed breakdown of the actual costs of the completed low NO_X burner technology retrofit project where low NO_X burner technology costs (section 4.1.4) are disaggregated, if feasible, from system replacement or upgrade costs (section 4.1.5).

4.1.7 Description of the probable causes for significant differences between actual and estimated low NO_X burner technology retrofit project costs.

4.1.8 Detailed breakdown of the burner and, if applicable, combustion air staging system annual operating and maintenance costs for the items listed in section 3.3 before and after the installation, shakedown, and/or optimization of the installed low NO_X burner technology. Include estimates and a description of the probable causes of the incremental annual operating and maintenance costs (or savings) attributable to the installed low NO_X burner technology.

4.2 All capital cost estimates are to be broken down into materials costs, construction and installation labor costs, and engineering and overhead costs. All operating and maintenance costs are to be broken down into maintenance materials costs, maintenance labor costs, operating labor costs, and fan electricity costs. All capital and operating costs are to be reported in dollars with the year of expenditure or estimate specified for each component.

[60 FR 18761, Apr. 13, 1995, as amended at 61 FR 67164, Dec. 19, 1996; 62 FR 3464, Jan. 23, 1997]

PART 77—EXCESS EMISSIONS

Sec.

77.1 Purpose and scope.
77.2 General.
77.3 Offset plans for excess emissions of sulfur dioxide.
77.4 Administrator's action on proposed offset plans.
77.5 Deduction of allowances to offset excess emissions of sulfur dioxide.
77.6 Penalties for excess emissions of sulfur dioxide and nitrogen oxides.

AUTHORITY: 42 U.S.C. 7601 and 7651, et seq.

SOURCE: 58 FR 3757, Jan. 11, 1993, unless otherwise noted.

§ 77.1 Purpose and scope.

(a) This part sets forth the excess emissions offset planning and offset penalty requirements under section 411 of the Clean Air Act, 42 U.S.C. 7401, *et seq.*, as amended by Public Law 101–549 (November 15, 1990). These requirements shall apply to the owners and operators and, to the extent applicable, the designated representative of each affected unit and affected source under the Acid Rain Program.

(b) Nothing in this part shall limit or otherwise affect the application of sections 112(r)(9), 113, 114, 120, 303, 304, or 306 of the Act, as amended. Any allowance deduction, excess emission penalty, or interest required under this part shall not affect the liability of the affected unit's and affected source's owners and operators for any additional fine, penalty, or assessment, or their obligation to comply with any other remedy, for the same violation, as ordered under the Act.

§ 77.2 General.

Part 72 of this chapter, including §§ 72.2 (definitions), 72.3 (measurements, abbreviations, and acronyms), 72.4 (Federal authority), 72.5 (State authority), 72.6 (applicability), 72.7 (new units exemption), 72.8 (retired units exemption), 72.9 (standard requirements), 72.10 (availability of information), and 72.11 (computation of time), shall apply to this part. The procedures for appeals of decisions of the Administrator under this part are contained in part 78 of this chapter.

§ 77.3 Offset plans for excess emissions of sulfur dioxide.

(a) *Applicability*. The owners and operators of any affected source that has excess emissions of sulfur dioxide in any calendar year shall be liable to offset the amount of such excess emissions by an equal amount of allowances from the source's compliance account.

(b) *Deadline*. Not later than 60 days after the end of any calendar year during which an affected source had excess emissions of sulfur dioxide (except for any increase in excess emissions under § 72.91(b) of this chapter), the designated representative for the source shall submit to the Administrator a complete proposed offset plan to offset those emissions. Each day after the 60-day deadline that the designated representative fails to submit a complete proposed offset plan shall be a separate violation of this part.

(c) *Number of Plans*. The designated representative shall submit a proposed offset plan for each affected source with excess emissions of sulfur dioxide.

(d) *Contents of Plan*. A complete proposed offset plan shall include the following elements in a format prescribed by the Administrator for the source and for the calendar year for which the plan is submitted:

(1) Identification of the source.

(2) If the source had excess emissions for the calendar year prior to the year for which the plan is submitted, an explanation of how and why the excess emissions occurred for the year for which the plan is submitted and a description of any measures that were or will be taken to prevent excess emissions in the future.

(3) At the designated representative's option, the number of allowances to be deducted from the source's compliance account's to offset the excess emissions for the year for which the plan is submitted.

(4) At the designated representative's option, the serial numbers of the allowances that are to be deducted from the source's compliance account's.

(5) A statement either that allowances to offset the excess emissions are to be deducted immediately from the source's compliance account or that they are to be deducted on a specified date in a subsequent year.

(6) If the proposed offset plan does not propose an immediate deduction of allowances under paragraph (d)(5) of this section, a demonstration that such a deduction will interfere with electric reliability.

[58 FR 3757, Jan. 11, 1993, as amended at 62 FR 55487, Oct. 24, 1997; 70 FR 25337, May 12, 2005]

§ 77.4 Administrator's action on proposed offset plans.

(a) *Determination of Completeness*. The Administrator will determine whether

the proposed offset plan is complete within 30 days of receipt by the Administrator. The offset plan shall be deemed complete if the Administrator fails to notify the designated representative to the contrary within 30 days of receipt or when the Administrator approves the offset plan and deducts allowances in accordance with paragraph (b)(1) of this section.

(b) *Review of proposed offset plans.* (1) If the designated representative submits a complete proposed offset plan for immediate deduction, from the source's compliance account, of allowances required to offset excess emissions of sulfur dioxide, the Administrator will approve the proposed offset plan without further review and will serve written notice of any approval on the designated representative. The Administrator will also give notice of any approval in the FEDERAL REGISTER. The plans will be incorporated in the unit's Acid Rain permit in accordance with § 72.84 of this chapter (automatic permit amendment) and will not be subject to the requirements of paragraphs (d) through (k) of this section.

(2) Notwithstanding paragraph (b)(1) of this section, the Administrator may, in his or her discretion, require that the proposed offset plan under paragraph (b)(1) of this section be reviewed under paragraphs (c) through (k) of this section. The Administrator may exercise such discretion where he or she determines that review of the plan is necessary to ensure compliance with the emissions limitation and reduction goals or other purposes of title IV of the Act.

(3) If the designated representative submits a complete proposed offset plan that does not meet the requirements of paragraph (b)(1) of this section, the Administrator will review the plan under paragraphs (c) through (k) of this section.

(c) *Supplemental Information.* (1)(i) Regardless of whether the proposed offset plan is complete under paragraph (a) of this section, the Administrator may require submission of any additional information that the Administrator determines is necessary to approve an offset plan.

(ii) Such supplemental information may include, but is not limited to:

(A) A description of the measures that are proposed to be taken to ensure that the source will have sufficient allowances to offset the excess emissions and to prevent excess emissions in future years;

(B) A schedule of compliance with appropriate increments of progress for the proposed measures; and

(C) A schedule for the submission of progress reports, and supporting documentation, describing actions taken and actions remaining to be taken under the schedule of compliance and any proposed adjustments to the schedule of compliance.

(2)(i) The designated representative shall submit the information required under paragraph (c)(1) of this section within a reasonable period determined by the Administrator.

(ii) If the designated representative fails to submit the supplemental information within the required time period, the Administrator may disapprove the proposed offset plan.

(d) *Draft Offset Plan.* (1) After the Administrator receives a complete proposed offset plan and any supplemental information, the Administrator will prepare a draft offset plan that incorporates in whole, in part, or with changes or conditions as appropriate, the proposed offset plan or disapprove a draft offset plan for the affected source. Regardless of whether the Administrator required the submission of the information set forth in paragraph (c)(1)(ii) of this section, the draft offset plan may include, among other requirements and conditions as determined to be appropriate by the Administrator, the submission of schedules of compliance, progress reports, and monitoring and other information.

(2) The draft offset plan will be based on the information submitted by the designated representative for the affected source and other relevant information.

(3) The Administrator will serve a copy of the draft offset plan and the statement of basis on the designated representative of the affected source.

(4) The Administrator will provide a 30-day period for public comment, and

opportunity to request a public hearing, on the draft offset plan or disapproval of a draft offset plan in accordance with the public notice required under paragraph (g)(1)(i)(A) of this section.

(e) *Offset Plan Administrative Record.* (1) The Administrator will prepare an administrative record for an offset plan or disapproval of an offset plan. The administrative record will contain:

(i) The proposed offset plan and any supporting or supplemental information submitted by the designated representative;

(ii) The draft offset plan;

(iii) The statement of basis;

(iv) Copies of all documents relied on by the Administrator in approving or disapproving the draft offset plan (including any records of discussions or conferences with owners, operators or the designated representative of the source or interested persons regarding the draft offset plan) or, for any such documents that are readily available, a statement of their location;

(v) Copies of all written public comments submitted on the draft offset plan or disapproval of a draft offset plan;

(vi) The record of any public hearing on the draft offset plan or disapproval of a draft offset plan;

(vii) The offset plan approved by the Administrator; and

(viii) Any response to public comments submitted on the draft offset plan or disapproval of a draft offset plan, including any documents cited in the response and any other documents relied on by the Administrator or, for any such documents that are readily available, a statement of their location.

(2) The Administrator will approve or disapprove an offset plan within 6 months of receipt of a complete proposed offset plan.

(f) *Statement of Basis.* (1) The statement of basis will briefly set forth significant factual, legal, and policy considerations on which the Administrator relied in approving or disapproving the draft offset plan.

(2) The statement of basis will include:

(i) The reasons, and supporting authority, for approval or disapproval of any proposed offset plan that does not require immediate deduction of allowances, including references to applicable statutory or regulatory provisions and to the administrative record; and

(ii) The name, address, and telephone and facsimile number of the EPA office processing the approval or disapproval of the offset plan.

(g) *Opportunities for Public Comment on Draft Offset Plans*—(1) *Generally.* (i) The Administrator will give public notice of the following:

(A) The draft offset plan or disapproval of a draft offset plan and the opportunity for public comment and to request a public hearing; and

(B) Date, time, location, and procedures for any scheduled hearing on the draft offset plan or the disapproval of a draft offset plan.

(ii) Any public notice given under this section may be for the approval or disapproval of one or more draft offset plans.

(2) *Methods.* The Administrator will give the public notice required by this section by:

(i) Serving written notice on the following persons (except to the extent any such person has waived his or her right to receive such notice):

(A) The designated representative;

(B) The air pollution control agencies of affected States; and

(C) Any interested person.

(ii) Giving notice by publication in the FEDERAL REGISTER and in a newspaper of general circulation in the area where the source is located or in a State publication designed to give general public notice.

(3) *Contents.* All public notices issued under this part will contain the following information:

(i) Identification of the EPA office processing the approval or disapproval of the draft offset plan for which the notice is being given.

(ii) Identification of the designated representative for the affected source.

(iii) Identification of each affected source covered by the proposed offset plan.

(iv) The amount of excess emissions that must be offset and the date on which the allowances are proposed to be deducted.

(v) The address and office hours of a public location where the administrative record is available for public inspection and a statement that all information submitted by the designated representative and not protected as confidential pursuant to section 114(c) of the Act is available for public inspections as part of the administrative record.

(vi) For public notice under paragraph (g)(1)(i)(A) of this section, a brief description of the public comment procedures, including:

(A) A 30-day public comment period beginning the date of publication of the notice or, in the case of an extension or reopening of the public comment period, such period as the Administrator deems appropriate;

(B) The address where public comments should be sent;

(C) Required formats and contents for public comment;

(D) An opportunity to request a public hearing to occur not earlier than 15 days after public notice is given and the location, date, time, and procedures of any scheduled public hearing; and

(E) Any other means by which the public may participate.

(4) *Extensions and Reopenings of the Public Comment Period.* On the Administrator's own motion, or on the request for any person, the Administrator may, at his or her discretion, extend or reopen the public comment period where he or she finds that doing so will contribute to the decision-making process by clarifying one or more significant issues affecting the draft offset plan or disapproval of a draft offset plan. Notice of any such extension or reopening will be given under paragraph (g)(1)(i)(A) of this section.

(h) *Public comments*—(1) *General.* During the public comment period, any person may submit written comments on the draft offset plan or disapproval of a draft offset plan.

(2) *Form.* (i) Comments shall be submitted in duplicate.

(ii) The submission shall clearly indicate the draft offset plan approval or disapproval to which the comments apply.

(iii) The submission shall clearly indicate the name of the commenter, his or her interest, and his or her affiliation, if any, to owners and operators of any unit covered by the proposed offset plan.

(3) *Contents.* Timely comments on any aspect of a draft offset plan or disapproval of a draft offset plan will be considered unless they concern issues that are not relevant, such as:

(i) The environmental effects of acid rain, acid deposition, sulfur dioxide, or nitrogen oxides generally; and

(ii) Offset plan approval procedures or actions on other proposed offset plans that are not relevant to approval or disapproval of the draft offset plan in question.

(4) Persons who do not wish to raise issues on the draft offset plan or denial of a draft offset plan, but who wish to be notified of any subsequent actions concerning such matter, may so indicate during the public comment period or at any other time. The Administrator will place their names on a list of interested persons.

(i) *Opportunity for Public Hearing.* (1) During the public comment period, any person may request a public hearing. A request for a public hearing shall be made in writing and shall state the issues proposed to be raised in the hearing.

(2) On the Administrator's own motion or on the request of any person, the Administrator may, at his or her discretion, hold a public hearing whenever the Administrator finds that such a hearing will contribute to the decision-making process by clarifying one or more significant issues affecting the draft offset plan or disapproval of a draft offset plan. Public hearings will not be held on issues under paragraphs (h)(3) (i) and (ii) of this section.

(3) During a public hearing under this section, any person may submit oral or written comments concerning the draft offset plan or disapproval of a draft offset plan. The Administrator may set reasonable limits on the time allowed for oral statements and will require the submission of written summaries of each oral statement.

(4) The Administrator will assure that a record is made of the hearing.

(j) *Response to Comments.* (1) The Administrator will consider comments on the draft offset plan or disapproval of a

draft offset plan received during the public comment period and any public hearing. The Administrator is not required to consider comments otherwise received.

(2) In approving or disapproving an offset plan, the Administrator will:

(i) Identify any draft offset plan provision or portion of the statement of basis that has been changed and the reasons for the change; and

(ii) Briefly describe and respond to relevant comments under paragraph (j)(1) of this section.

(k) *Approval and Effective Date of Excess Emissions Offset Plans.* (1) After the close of the public comment period, the Administrator will approve an offset plan requiring allowance deductions in an amount equal to the unit's tons of excess emissions or disapprove an offset plan. The Administrator will serve a copy of any approved offset plan and the response to comments on the designated representative for the affected unit involved and serve written notice of the approval or disapproval of the offset plan on any persons who are entitled to written notice under paragraphs (g)(2)(i) (B) and (C) of this section or who submitted written or oral comments on the approval or disapproval of the draft offset plan. The Administrator will also give notice in the FEDERAL REGISTER.

(2) The Administrator will approve an offset plan requiring immediate deduction from the source's compliance account of all allowances necessary to offset the excess emissions except to the extent the designated representative of the source demonstrates that such a deduction will interfere with electric reliability.

(3) Upon approval of the offset plan by the Administrator, the offset plan will be incorporated into the Acid Rain permit in accordance with § 72.84 (automatic permit amendment) and shall supersede any inconsistent provision of the permit.

[58 FR 3757, Jan. 11, 1993, as amended at 62 FR 55487, Oct. 24, 1997; 62 FR 66279, Dec. 18, 1997; 70 FR 25337, May 12, 2005]

§ 77.5 Deduction of allowances to offset excess emissions of sulfur dioxide.

(a) The Administrator will deduct allowances to offset excess emissions in accordance with the offset plan approved under § 77.4(b) (1) or (k) or in accordance with § 72.91(b) of this chapter.

(b) The designated representative shall hold enough allowances in the appropriate compliance account to cover the deductions to be made in accordance with paragraph (a) or paragraph (c) of this section.

(c) If the designated representative does not submit a timely and complete proposed offset plan, or if the Administrator disapproves a proposed offset plan under § 77.4 (c) or (k), the Administrator will immediately deduct allowances allocated for the year after the year in which the source has excess emissions, from the source's compliance account on a first-in, first-out basis in accordance with § 73.35(c)(2) of this chapter, equal to the amount of the source's excess emissions of sulfur dioxide.

[58 FR 3757, Jan. 11, 1993, as amended at 70 FR 25337, May 12, 2005]

§ 77.6 Penalties for excess emissions of sulfur dioxide and nitrogen oxides.

(a)(1) If excess emissions of sulfur dioxide occur at the affected source or nitrogen oxide occur at an affected unit during any year, the owners and operators respectively of the affected source and the affected units at the source or of the affected unit shall pay, without demand, an excess emissions penalty, as calculated under paragraph (b) of this section.

(2) If one or more affected units governed by an approved NO_X averaging plan under § 76.11 of this chapter fail (after applying § 76.11(d)(1)(ii)(C) of this chapter) to meet their respective alternative contemporaneous emission limitations or annual heat input limits, then excess emissions of nitrogen oxides occur during the year at each such unit. The sum of the excess emissions of nitrogen oxides of such units shall equal the amount determined under § 76.13(b) of this chapter. The owners and operators of such units shall pay

an excess emissions penalty, as calculated under paragraph (b) of this section using the sum of the excess emissions of nitrogen oxides of such units.

(3) Except as otherwise provided in this paragraph (a)(3), payment under paragraphs (a) (1) or (2) of this section shall be submitted to the Administrator by 30 days after the date on which the Administrator serves the designated representative a notice that the process of recordation set forth in § 73.34(a) of this chapter is completed or by July 1 of the year after the year in which the excess emissions occurred, whichever date is earlier. Payment under paragraph (a)(1) of this section for any increase in excess emissions of sulfur dioxide determined after adjustments made under § 72.91(b) of this chapter shall be submitted to the Administrator by 30 days after the date on which the Administrator serves the designated representative a notice that process set forth in § 72.91(b) of this chapter is completed.

(b) *Penalty formula*. (1) The following formulas shall be used to determine the excess emissions penalty:

Penalty for excess emissions of sulfur dioxide = $2000/ton × annual adjustment factor × tons of excess emissions of sulfur dioxide.

Penalty for excess emissions of nitrogen oxides = $2000/ton × annual adjustment factor × tons of excess emissions of nitrogen oxides.

(i) The annual adjustment factor will be calculated as follows:

Annual adjustment factor = 1 + {[CPI(year) − CPI(1990)] / CPI(1990)}

where:

(A) ''CPI(year)'' is the Consumer Price Index as defined in § 72.2 of this chapter and ''year'' is the year in which the source or unit as appropriate had excess emissions.

(B) ''CPI(1990)'' is the Consumer Price Index for 1990, as defined in § 72.2 of this chapter.

(ii) The Administrator will publish the annual adjustment factor in the FEDERAL REGISTER by October 15 of each year beginning in 1995.

(2) The penalty may be rounded to the nearest dollar after completing the calculation in paragraph (b)(1)(i) of this section.

(3) The penalty for excess emissions of sulfur dioxide shall be paid separately from the payment for excess emissions of nitrogen oxides. Each payment shall be accompanied by a document, in a format prescribed by the Administrator, indicating the source or unit as appropriate for which the payment is made, whether the payment is for excess emissions of sulfur dioxide or nitrogen oxides, the number of tons of excess emissions, the penalty amount, and the check or money order number of the payment.

(c) If an excess emissions penalty due under this part is not paid on or before the applicable deadline under paragraph (a) of this section, the penalty shall be subject to interest charges in accordance with the Debt Collection Act (31 U.S.C. 3717). Interest shall begin to accrue on the date on which the Administrator mails, to the designated representative of the source or unit as appropriate with excess emissions, a demand notice for the payment.

(d)(1) Except for wire transfers made in accordance with paragraph (d)(2) of this section, payments of penalties shall be made by money order, cashier's check, certified check, or U.S. Treasury check made payable to the ''U.S. EPA.''

(2) Payments made under paragraph (c)(1) of this section shall be mailed to the following address, unless the Administrator has notified the designated representative of a different address: U.S. EPA: Headquarters Accounting Operations Branch, Acid Rain Excess Emissions Penalties, P.O. Box 952491, St. Louis, MO 63195–2491.

(3) Payments of penalties of $25,000 or more may be made by wire transfer to the U.S. Treasury at the Federal Reserve Bank of New York.

(e) If the Administrator determines that overpayment has been made, he or she will refund the overpayment without interest, as promptly as administratively possible.

(f) Excess emissions in any year resulting directly from an order issued in that year under section 110(f) of the Act shall not be subject to the penalty payment requirements of this section;

provided that the designated representative of any source or unit as appropriate subject to such order shall advise the Administrator within 30 days of issuance of the order that the order will result in such excess emissions.

[58 FR 3757, Jan. 11, 1993, as amended at 60 FR 17131, Apr. 4, 1995; 62 FR 55487, Oct. 24, 1997; 70 FR 25337, May 12, 2005]

PART 78—APPEAL PROCEDURES

Sec.
78.1 Purpose and scope.
78.2 General.
78.3 Petition for administrative review and request for evidentiary hearing.
78.4 Filings.
78.5 Limitation on filing or presenting new evidence and raising new issues.
78.6 Action on petition for administrative review.
78.7 [Reserved]
78.8 Consolidation and severance of appeals proceedings.
78.9 Notice of the filing of petition for administrative review.
78.10 *Ex parte* communications during pendency of a hearing.
78.11 Intervenors.
78.12 Standard of review.
78.13 Scheduling orders and pre-hearing conferences.
78.14 Evidentiary hearing procedure.
78.15 Motions in evidentiary hearings.
78.16 Record of appeal proceeding.
78.17 Proposed findings and conclusions and supporting brief.
78.18 Proposed decision.
78.19 Interlocutory appeal.
78.20 Appeal of decision of Administrator or proposed decision to the Environmental Appeals Board.

AUTHORITY: 42 U.S.C. 7401, 7403, 7410, 7411, 7426, 7601, and 7651, *et seq.*

SOURCE: 58 FR 3760, Jan. 11, 1993, unless otherwise noted.

§ 78.1 Purpose and scope.

(a)(1) This part shall govern appeals of any final decision of the Administrator under subpart HHHH of part 60 of this chapter or State regulations approved under § 60.24(h)(6)(i) or (ii) of this chapter, part 72, 73, 74, 75, 76, or 77 of this chapter, subparts AA through II of part 96 of this chapter or State regulations approved under § 51.123(o)(1) or (2) of this chapter, subparts AAA through III of part 96 of this chapter or State regulations approved under § 51.124(o)(1) or (2) of this chapter, subparts AAAA through IIII of part 96 of this chapter or State regulations approved under § 51.123(aa)(1) or (2) of this chapter, or part 97 of this chapter; provided that matters listed in § 78.3(d) and preliminary, procedural, or intermediate decisions, such as draft Acid Rain permits, may not be appealed. All references in paragraph (b) of this section and in § 78.3 to subpart HHHH of part 60 of this chapter, subparts AA through II of part 96 of this chapter, subparts AAA through III of part 96 of this chapter, and subparts AAAA through IIII of part 96 of this chapter shall be read to include the comparable provisions in State regulations approved under § 60.24(h)(6)(i) or (ii) of this chapter, § 51.123(o)(1) or (2) of this chapter, § 51.124(o)(1) or (2) of this chapter, and § 51.123(aa)(1) or (2) of this chapter, respectively.

(2) Filing an appeal, and exhausting administrative remedies, under this part shall be a prerequisite to seeking judicial review. For purposes of judicial review, final agency action occurs only when a decision appealable under this part is issued and the procedures under this part for appealing the decision are exhausted.

(b) The decisions of the Administrator that may be appealed include but are not limited to:

(1) Under part 72 of this chapter;

(i) The determination of incompleteness of an Acid Rain permit application;

(ii) The issuance or denial of an Acid Rain permit and approval or disapproval of a compliance option by the Administrator;

(iii) The approval or disapproval of an early ranking application for Phase I extension under § 72.42 of this chapter;

(iv) The final determination of whether a technology is a qualified repowering technology under § 72.44 of this chapter;

(v) [Reserved]

(vi) The approval or disapproval of a permit revision;

(vii) The decision on the deduction or return of allowances under §§ 72.41, 72.42, 72.43, 72.44, 72.91(b), and 72.92 (a) and (c) of this chapter; and

(viii) The failure to issue an Acid Rain permit in accordance with the deadline under § 72.74(b) of this chapter.

(2) Under part 73 of this chapter,

(i) The correction of an error in an Allowance Tracking System account;

(ii) The decision on the allocation of allowances from the Conservation and Renewal Energy Reserve;

(iii) The decision on the allocation of allowances under regulations implementing sections 404(e), 405(g)(4), 405(i)(2), and 410(h) of the Act;

(iv) The decision on the allocation of allowances under part 73, subpart F of this chapter;

(v) The decision on the sale or return of allowances and transfer of proceeds under part 73, subpart E; and

(vi) The decision on the deduction of allowances under § 73.35(b) of this chapter.

(3) Under part 74 of this chapter,

(i) The determination of incompleteness of an opt-in permit application;

(ii) The issuance or denial of an opt-in permit and approval or disapproval of the transfer of allowances for the replacement of thermal energy;

(iii) The approval or disapproval of a permit revision to an opt-in permit;

(iv) The decision on the deduction or return of allowances under subpart E of part 74 of this chapter;

(4) Under part 75 of this chapter,

(i) The decision on a petition for approval of an alternative monitoring system;

(ii) The approval or disapproval of a monitoring system certification or recertification;

(iii) The finalization of annual emissions data, including retroactive adjustment based on audit;

(iv) The determination of the percentage of emissions reduction achieved by qualifying Phase I technology; and

(v) The determination on the acceptability of parametric missing data procedures for a unit equipped with add-on controls for sulfur dioxide and nitrogen oxides in accordance with part 75 of this chapter.

(5) Under part 77 of this chapter, the determination of incompleteness of an offset plan and the approval or disapproval of an offset plan under § 77.4 of this chapter and the deduction of allowances under § 77.5(c) of this chapter.

(6) Under part 97 of this chapter:

(i) The adjustment of the information in a compliance certification or other submission and the deduction or transfer of NO_X allowances based on the information, as adjusted, under § 97.31 of this chapter;

(ii) The decision on the allocation of NO_X allowances to a NO_X Budget unit under § 97.41(b), (c), (d), or (e) of this chapter;

(iii) The decision on the allocation of NO_X allowances to a NO_X Budget unit from the compliance supplement pool under § 97.43 of this chapter;

(iv) The decision on the deduction of NO_X allowances under § 97.54 of this chapter;

(v) The decision on the transfer of NO_X allowances under § 97.61 of this chapter;

(vi) The decision on a petition for approval of an alternative monitoring system;

(vii) The approval or disapproval of a monitoring system certification or recertification under § 97.71 of this chapter;

(viii) The finalization of control period emissions data, including retroactive adjustment based on audit;

(ix) The approval or disapproval of a petition under § 97.75 of this chapter;

(x) The determination of the sufficiency of the monitoring plan for a NO_X Budget opt-in unit;

(xi) The decision on a request for withdrawal of a NO_X Budget opt-in unit from the NO_X Budget Trading Program under § 97.86 of this chapter;

(xii) The decision on the deduction of NO_X allowances under § 97.87 of this chapter; and

(xiii) The decision on the allocation of NO_X allowances to a NO_X Budget opt-in unit under § 97.88 of this chapter.

(7) Under subparts AA through II of part 96 of this chapter,

(i) The decision on the allocation of CAIR NO_X allowances under § 96.141(b)(2) or (c)(2) of this chapter.

(ii) The decision on the deduction of CAIR NO_X allowances, and the adjustment of the information in a submission and the decision on the deduction or transfer of CAIR NO_X allowances based on the information as adjusted, under § 96.154 of this chapter;

(iii) The correction of an error in a CAIR NO_X Allowance Tracking System account under §96.156 of this chapter;

(iv) The decision on the transfer of CAIR NO_X allowances under §96.161 of this chapter;

(v) The finalization of control period emissions data, including retroactive adjustment based on audit;

(vi) The approval or disapproval of a petition under §96.175 of this chapter.

(8) Under subparts AAA through III of part 96 of this chapter,

(i) The decision on the deduction of CAIR SO_2 allowances, and the adjustment of the information in a submission and the decision on the deduction or transfer of CAIR SO_2 allowances based on the information as adjusted, under §96.254 of this chapter;

(ii) The correction of an error in a CAIR SO_2 Allowance Tracking System account under §96.256 of this chapter;

(iii) The decision on the transfer of CAIR SO_2 allowances under §96.261 of this chapter;

(iv) The finalization of control period emissions data, including retroactive adjustment based on audit;

(v) The approval or disapproval of a petition under §96.275 of this chapter.

(9) Under subparts AAAA through IIII of part 96 of this chapter,

(i) The decision on the allocation of CAIR NO_X Ozone Season allowances under §96.341(b)(2) or (c)(2)of this chapter.

(ii) The decision on the deduction of CAIR NO_X Ozone Season allowances, and the adjustment of the information in a submission and the decision on the deduction or transfer of CAIR NO_X Ozone Season allowances based on the information as adjusted, under §96.354 of this chapter;

(iii) The correction of an error in a CAIR NO_X Ozone Season Allowance Tracking System account under §96.356 of this chapter;

(iv) The decision on the transfer of CAIR NO_X Ozone Season allowances under §96.361;

(v) The finalization of control period emissions data, including retroactive adjustment based on audit;

(vi) The approval or disapproval of a petition under §96.375 of this chapter.

(10) Under subparts AA through II of part 97 of this chapter,

(i) The decision on the allocation of CAIR NO_X allowances under subpart EE of part 97 of this chapter.

(ii) The decision on the deduction of CAIR NO_X allowances, and the adjustment of the information in a submission and the decision on the deduction or transfer of CAIR NO_X allowances based on the information as adjusted, under §97.154 of this chapter;

(iii) The correction of an error in a CAIR NO_X Allowance Tracking System account under §97.156 of this chapter;

(iv) The decision on the transfer of CAIR NO_X allowances under §97.161 of this chapter;

(v) The finalization of control period emissions data, including retroactive adjustment based on audit;

(vi) The approval or disapproval of a petition under §97.175 of this chapter.

(11) Under subparts AAA through III of part 97 of this chapter,

(i) The decision on the deduction of CAIR SO_2 allowances, and the adjustment of the information in a submission and the decision on the deduction or transfer of CAIR SO_2 allowances based on the information as adjusted, under §97.254 of this chapter;

(ii) The correction of an error in a CAIR SO_2 Allowance Tracking System account under §97.256 of this chapter;

(iii) The decision on the transfer of CAIR SO_2 allowances under §97.261 of this chapter;

(iv) The finalization of control period emissions data, including retroactive adjustment based on audit;

(v) The approval or disapproval of a petition under §97.275 of this chapter.

(12) Under subparts AAAA through IIII of part 97 of this chapter,

(i) The decision on the allocation of CAIR NO_X Ozone Season allowances under subpart EEEE of part 97 of this chapter.

(ii) The decision on the deduction of CAIR NO_X Ozone Season allowances, and the adjustment of the information in a submission and the decision on the deduction or transfer of CAIR NO_X Ozone Season allowances based on the information as adjusted, under §97.354 of this chapter;

(iii) The correction of an error in a CAIR NO_X Ozone Season Allowance Tracking System account under §97.356 of this chapter;

(iv) The decision on the transfer of CAIR NO_X Ozone Season allowances under § 97.361;

(v) The finalization of control period emissions data, including retroactive adjustment based on audit;

(vi) The approval or disapproval of a petition under § 97.375 of this chapter.

(c) In order to appeal a decision under paragraph (a) of this section, a person shall file a petition for administrative review with the Environmental Appeals Board under § 78.3. The Environmental Appeals Board will, consistent with § 78.6, either:

(1) Issue an order deciding the appeal; or

(2) Where there is a disputed issue of fact material to the contested portions of the decision, refer the proceeding to the Chief Administrative Law Judge, who will designate an Administrative Law Judge to conduct an evidentiary hearing to decide the disputed issue of fact. If the proposed decision is contested or the Environmental Appeals Board decides to review the proposed decision, the Environmental Appeals Board will issue an order deciding the appeal.

(d) Questions arising at any stage of a proceeding that are not addressed in this part will be resolved at the discretion of the Environmental Appeals Board or the Presiding Officer.

[58 FR 3760, Jan. 11, 1993, as amended at 60 FR 17132, Apr. 4, 1995; 62 FR 55488, Oct. 24, 1997; 66 FR 12978, Mar. 1, 2001; 69 FR 21644, Apr. 21, 2004; 70 FR 25338, May 12, 2005; 71 FR 25379, Apr. 28, 2006; 72 FR 59205, Oct. 19, 2007]

§ 78.2 General.

Part 72 of this chapter, including §§ 72.2 (definitions), 72.3 (measurements, abbreviations, and acronyms), 72.4 (Federal authority), 72.5 (State authority), 72.6 (applicability), 72.7 (new units exemption), 72.8 (retired units exemption), 72.9 (standard requirements), 72.10 (availability of information), and 72.11 (computation of time), shall apply to appeals of any final decision of the Administrator under parts 72, 73, 74, 75, 76, or 77 of this chapter.

[58 FR 3760, Jan. 11, 1993, as amended at 69 FR 21645, Apr. 21, 2004]

§ 78.3 Petition for administrative review and request for evidentiary hearing.

(a)(1) The following persons may petition for administrative review of a decision of the Administrator that is made under parts 72, 74, 75, 76, and 77 of this chapter and that is appealable under § 78.1(a) of this part:

(i) The designated representative for the unit covered by the decision;

(ii) The authorized account representative for an account covered by the decision; and

(iii) Any interested person.

(2) The following persons may petition for administrative review of a decision of the Administrator that is made under part 73 of this chapter and that is appealable under § 78.1(a):

(i) The authorized account representative for any Allowance Tracking System account covered by the decision; and

(ii) With regard to the decision on the allocation of allowances from the Conservation and Renewable Energy Reserve, the certifying official whose application is covered by the decision.

(3) The following persons may petition for administrative review of a decision of the Administrator that is made under part 97 of this chapter and that is appealable under § 78.1(a) of this part:

(i) The NO_X authorized account representative for the unit or any NO_X Allowance Tracking System account covered by the decision; or

(ii) Any interested person.

(4) The following persons may petition for administrative review of a decision of the Administrator that is made under subparts AA through II of part 96 of this chapter and that is appealable under § 78.1(a):

(i) The CAIR designated representative for a unit or source, or the CAIR authorized account representative for any CAIR NO_X Allowance Tracking System account, covered by the decision; or

(ii) Any interested person.

(5) The following persons may petition for administrative review of a decision of the Administrator that is made under subparts AAA through III of part 96 of this chapter and that is appealable under § 78.1(a):

(i) The CAIR designated representative for a unit or source, or the CAIR authorized account representative for any CAIR SO_2 Allowance Tracking System account, covered by the decision; or

(ii) Any interested person.

(6) The following persons may petition for administrative review of a decision of the Administrator that is made under subparts AAAA through IIII of part 96 of this chapter and that is appealable under § 78.1(a):

(i) The CAIR designated representative for a unit or source, or the CAIR authorized account representative for any CAIR Ozone Season NO_X Allowance Tracking System account, covered by the decision; or

(ii) Any interested person.

(7) The following persons may petition for administrative review of a decision of the Administrator that is made under subparts AA through II of part 97 of this chapter and that is appealable under § 78.1(a):

(i) The CAIR designated representative for a unit or source, or the CAIR authorized account representative for any CAIR NO_X Allowance Tracking System account, covered by the decision; or

(ii) Any interested person.

(8) The following persons may petition for administrative review of a decision of the Administrator that is made under subparts AAA through III of part 97 and that is appealable under § 78.1(a):

(i) The CAIR designated representative for a unit or source, or the CAIR authorized account representative for any CAIR SO_2 Allowance Tracking System account, covered by the decision; or

(ii) Any interested person.

(9) The following persons may petition for administrative review of a decision of the Administrator that is made under subparts AAAA through III of part 97 and that is appealable under § 78.1(a):

(i) The CAIR designated representative for a unit or source, or the CAIR authorized account representative for any CAIR Ozone Season NO_X Allowance Tracking System account, covered by the decision; or

(ii) Any interested person.

(b)(1) Within 30 days following issuance of a decision under § 78.1 of this part by the Administrator, any person under paragraph (a) of this section may file a petition with the Environmental Appeals Board for administrative review of the decision. If no petition for administrative review of a decision under § 78.1 of this part is filed within such period, the decision shall become final agency action and shall not meet the prerequisite for judicial review under § 78.1(a)(2).

(2) The petition may include a request for an evidentiary hearing to resolve any disputed issue of material fact concerning the decision.

(3) At the same time that the petition for administrative review is filed, the petitioner shall:

(i) Serve a copy of the petition on the designated representative or authorized account representative under paragraph (a)(1) and (2) of this section (unless the designated representative or authorized account representative is the petitioner) or the NO_X authorized account representative under paragraph (a)(3) of this section (unless the NO_X authorized account representative is the petitioner) or the CAIR designated representative or CAIR authorized account representative under paragraph (a)(4), (5), (6), (7), (8), or (9) of this section (unless the CAIR designated representative or CAIR authorized account representative is the petitioner) and the Administrator; and

(ii) Mail a notice of the petition to the air pollution control agencies of affected States and any interested person.

(c) The petition for administrative review under this part shall state with specificity:

(1) Each material factual and legal issue alleged to be in dispute and any such factual issue for which an evidentiary hearing is sought;

(2) A clear and concise statement of the nature and scope of the interest of the petitioner;

(3) A clear and concise brief in support of the petition, explaining why the factual or legal issues are material and, if an evidentiary hearing is requested, why direct and cross-examination of witnesses is necessary to resolve such factual issues;

(4) If an evidentiary hearing is requested, the time estimated to be necessary for an evidentiary hearing;

(5) If an evidentiary hearing is requested, a certified statement that, in the event of an evidentiary hearing, and without cost or expense to any other party, any of the following persons shall be available to appear and testify:

(i) The petitioner; and

(ii) Any officer, director, employee, consultant, or agent of the petitioner.

(6) Specific references to the contested portions of the decision; and

(7) Any revised or alternative action of the Administrator sought by the petitioner as necessary to implement the requirements, purposes, or policies of title IV of the Act, subparts AA through II of part 96 of this chapter, subparts AAA through III of part 96 of this chapter, subparts AAAA through IIII of part 96 of this chapter, or part 97 of this chapter, as appropriate.

(d) In no event shall a petition for administrative review be filed, or review be available under this part, with regard to:

(1) Any provision or requirement of part 72, 73, 74, 75, 76, or 77 of this chapter, including any standard requirement under § 72.9 of this chapter and any emissions monitoring or reporting requirements under part 75 of this chapter;

(2) Any provision or requirement of part 97 of this chapter, including the standard requirements under § 97.6 of this chapter and any emission monitoring or reporting requirements under part 97 of this chapter.

(3) The reliance by the Administrator on a certificate of representation submitted by a designated representative or a certification statement submitted by an authorized account representative under the Acid Rain Program or on an account certificate of representation submitted by a NO_X authorized account representative or an application for a general account submitted by a NO_X authorized account representative under the NO_X Budget Trading Program or on an certificate of representation submitted by a CAIR designated representative or an application for a general account submitted by a CAIR authorized account representative under subparts AA through II, subparts AAA through III, subparts AAAA through IIII of part 96 of this chapter or under part 97 of this chapter; and

(4) Actions of the Administrator under sections 112(r), 113, 114, 120, 301, and 303 of the Act.

(5) Any provision or requirement of subparts AA through II of part 96 of this chapter, including the standard requirements under § 96.106 of this chapter and any emission monitoring or reporting requirements.

(6) Any provision or requirement of subparts AAA through III of part 96 of this chapter, including the standard requirements under § 96.206 of this chapter and any emission monitoring or reporting requirements.

(7) Any provision or requirement of subparts AAAA through IIII of part 96 of this chapter, including the standard requirements under § 96.306 of this chapter and any emission monitoring or reporting requirements.

(8) Any provision or requirement of subparts AA through II of part 97 of this chapter, including the standard requirements under § 97.106 of this chapter and any emission monitoring or reporting requirements.

(9) Any provision or requirement of subparts AAA through III of part 97 of this chapter, including the standard requirements under § 97.206 of this chapter and any emission monitoring or reporting requirements.

(10) Any provision or requirement of subparts AAAA through IIII of part 97 of this chapter, including the standard requirements under § 97.306 of this chapter and any emission monitoring or reporting requirements.

[58 FR 3760, Jan. 11, 1993, as amended at 60 FR 17132, Apr. 4, 1995; 62 FR 55488, Oct. 24, 1997; 69 FR 21645, Apr. 21, 2004; 70 FR 25338, May 12, 2005; 71 FR 25379, Apr. 28, 2006]

§ 78.4 Filings.

(a) All original filings made under this part shall be signed by the person making the filing or by an attorney or authorized representative. Any filings on behalf of owners and operators of an affected unit or affected source shall be signed by the designated representative. Any filings on behalf of persons

with an interest in allowances in a general account shall be signed by the authorized account representative. Any filings on behalf of owners and operators of a NO_X Budget unit or source shall be signed by the NO_X authorized account representative. Any filings on behalf of persons with an interest in NO_X allowances in a general account shall be signed by the NO_X authorized account representative. Any filings on behalf of owners and operators of a CAIR NO_X, SO_2, or NO_X Ozone Season unit or source shall be signed by the CAIR designated representative. Any filings on behalf of persons with an interest in CAIR NO_X allowances, CAIR SO_2 allowances, or CAIR NO_X Ozone Season allowances in a general account shall be signed by the CAIR authorized account representative. The name, address, telephone number, and facsimile number of the person making the filing shall be provided with the filing.

(b)(1) All data and information referred to, or in any way relied upon, in any filings made under this part shall be included in full and may not be incorporated by reference, unless the data or information is contained in the administrative record for the decision being appealed.

(2) Notwithstanding paragraph (b)(1) of this section, State or Federal statutes, regulations, and judicial decisions published in a national reporter system, officially issued EPA documents of general applicability, and any other publicly and generally available reference material may be incorporated by reference. Any person incorporating such materials by reference shall provide copies of the materials as instructed by the Environmental Appeals Board or the Presiding Officer.

(3) If any part of any filing is in a foreign language, it shall be accompanied by an English translation verified by the person making the translation, under oath, to be complete and accurate, together with the name, address, and a brief statement of the qualifications of the person making the translation. Translations filed of material originally produced in a foreign language shall be accompanied by copies of the original material.

(4) Where relevant data or information is contained in a document also containing irrelevant matter, either the irrelevant matter shall be deleted or an index to the relevant portions of the document shall be included in the document.

(c)(1) Failure to comply with the requirements of this section or any other requirement in this part may result in the noncomplying portions of the filing being excluded from consideration. If the Environmental Appeals Board or the Presiding Officer determines on motion by any party or *sua sponte* that a filing fails to meet any requirement of this part, the Environmental Appeals Board or Presiding Officer may return the filing, together with a reference to the applicable requirements on which the determination is based. A person whose filing has been rejected has 7 days (or other reasonable period established by the Environmental Appeals Board or Presiding Officer), from the date the returned filing is mailed, to correct the filing in conformance with this part and refile it.

(2) The making of a filing shall not mean or imply that the filing, in fact, meets all applicable requirements, that the filing contains reasonable grounds for the action requested, or that the action requested is in accordance with law.

(d) An original and two copies of any written filing under this part shall be filed with the Environmental Appeals Board unless a proceeding is pending before a Presiding Officer, in which case they shall be filed with the Hearing Clerk (except as provided under § 78.19(d)) of this part.

(e)(1) The party making any filing in a proceeding under this part shall also serve a copy of the filing on each party to the proceeding, or, with regard to a petition for administrative review, on the persons specified in § 78.3(b)(3) of this part.

(2) Every filing made under this part shall be accompanied by a certificate of service citing the date, place, time, and manner of service and the names of the persons served.

(f) The Hearing Clerk will maintain and furnish, to any person upon request, the official service list containing the name, service address, telephone, and facsimile numbers of each party to a proceeding under this part

and his or her attorney or duly authorized representative.

(g) Affidavits filed under this part shall be made on personal knowledge and belief, set forth only those facts that are admissible into evidence under § 78.5 of this part, and show affirmatively that the affiant is competent to testify to the matters stated therein.

[58 FR 3760, Jan. 11, 1993, as amended at 62 FR 55488, Oct. 24, 1997; 62 FR 66279, Dec. 18, 1997; 69 FR 21645, Apr. 21, 2004; 70 FR 25339, May 12, 2005]

§ 78.5 Limitation on filing or presenting new evidence and raising new issues.

(a) Where there was an opportunity for public comment prior to the decision that is subject to appeal, no evidence shall be filed or presented, and no issues raised, in a proceeding under this part that were not filed, presented, or raised during the public comment period, absent a showing of good cause explaining the party's failure to do so during the public comment period. Good cause shall include any instance where the party seeking to file or present new evidence or raise a new issue shows that the evidence could not have reasonably been ascertained, filed, or presented, the issue could not have reasonably been ascertained or raised, or that the materiality of the new evidence or issue could not have reasonably been anticipated, prior to the close of the public comment period.

(b) If an evidentiary hearing is granted, no evidence shall be filed or presented on questions of law or policy or on matters not subject to challenge in the evidentiary hearing.

[58 FR 3760, Jan. 11, 1993, as amended at 62 FR 55488, Oct. 24, 1997; 70 FR 25339, May 12, 2005]

§ 78.6 Action on petition for administrative review.

(a) If no evidentiary hearing concerning the petition for review is requested or is to be held, the Environmental Appeals Board will issue an order under § 78.20(c) of this part.

(b)(1) The Environmental Appeals Board may grant a request for an evidentiary hearing, or schedule an evidentiary hearing *sua sponte*, if the Environmental Appeals Board finds that there are disputed issues of fact material to contested portions of the decision and determines, in its discretion, that an opportunity for direct- and cross-examination of witnesses may be necessary in order to resolve these factual issues.

(2) To the extent the Environmental Appeals Board grants a request for an evidentiary hearing, in whole or in part, it will:

(i) Identify the portions of the decision that have been contested, and the disputed factual issues that have been raised by the petitioner with regard to which the evidentiary hearing has been granted; and

(ii) Refer the disputed factual issues to the Chief Administrative Law Judge for decision and, in its discretion, may also refer all or a portion of the remaining legal, policy, or factual issues to the Chief Administrative Law Judge for decision.

(3)(i) After issues are referred to the Chief Administrative Law Judge, he or she will designate an Administrative Law Judge as Presiding Officer to conduct the evidentiary hearing.

(ii) Notwithstanding paragraph (b)(3)(i) of this section, if all parties waive in writing their right to have an Administrative Law Judge designated as the Presiding Officer, the Administrator may designate a lawyer permanently or temporarily employed by EPA and without any prior connection with the proceeding to serve as Presiding Officer.

§ 78.7 [Reserved]

§ 78.8 Consolidation and severance of appeals proceedings.

(a) The Environmental Appeals Board or Presiding Officer has the discretion to consolidate, in whole or in part, two or more proceedings under this part whenever it appears that a joint proceeding on any or all of the matters at issue in the proceedings will be in the interest of justice, will expedite or simplify consideration of the issues, and will not prejudice any party. Consolidation of proceedings under this paragraph (a) will not affect the right of any party to raise issues that might have been raised had there been no consolidation.

(b) The Environmental Appeals Board or Presiding Officer has the discretion to sever issues or parties from a proceeding under this part whenever it appears that separate proceedings will be in the interest of justice, will expedite or simplify consideration of the issues, and will not prejudice any party.

§ 78.9 Notice of the filing of petition for administrative review.

The Administrator will publish in the FEDERAL REGISTER a notice stating that a petition for administrative review of a decision of the Administrator has been filed and specifying any request in the petition for an evidentiary hearing.

§ 78.10 *Ex parte* communications during pendency of a hearing.

(a)(1) No party or interested person outside EPA, representative of a party or interested person, or member of the EPA trial staff shall make, or knowingly cause to be made, to any member of the decisional body an *ex parte* communication on the merits of a proceeding under this part.

(2) No member of the decisional body shall make, or knowingly cause to be made, to any party or interested person outside EPA, representative of a party or interested person, or member of the EPA trial staff, an *ex parte* communication on the merits of any proceeding under this part.

(3) A member of the decisional body who receives, makes, or knowingly causes to be made an *ex parte* communication prohibited by this paragraph shall file with the Environmental Appeals Board (or, if the proceeding is pending before an Administrative Law Judge, with the Hearing Clerk) for inclusion in the record of the proceeding under this part any such written *ex parte* communications and memoranda stating the substance of any such oral *ex parte* communication.

(b) Whenever any member of the decisional body receives an *ex parte* communication made, or knowingly caused to be made by a party or representative of a party to a proceeding under this part, the person presiding over the proceedings then in progress may, to the extent consistent with justice, require the party to show good cause why its claim or interest in the proceedings should not be dismissed, denied, disregarded, or otherwise adversely affected on account of these *ex parte* communications.

(c) The prohibitions of paragraph (a) of this section shall begin to apply upon publication by the Administrator of the notice of the filing of a petition under § 78.9 of this part. This prohibition terminates on the date of final agency action.

§ 78.11 Intervenors.

(a) Within 30 days (or other shorter, reasonable period established by the Administrator when giving notice) after notice is given under § 78.9 of this part that the petition for administrative review has been filed, any person listed in § 78.3(a) of this part may file a motion for leave to intervene in the proceeding. A motion for leave to intervene under this section shall set forth the grounds for the proposed intervention and may respond to the petition for administrative review. Late motions to intervene may be granted only for good cause shown.

(b) The Environmental Appeals Board of Presiding Officer will grant a motion to intervene only upon an express finding that:

(1) The motion to intervene raises matters relevant to the factual or legal issues to be reviewed;

(2) The intervenor consented to be bound by all stipulations previously entered into by the existing parties, and all orders previously issued, in the proceeding; and

(3) The intervention will promote the interests of justice and will not cause undue delay or prejudice to the rights of the existing parties.

[58 FR 3760, Jan. 11, 1993, as amended at 62 FR 55488, Oct. 24, 1997]

§ 78.12 Standard of review.

(a) On appeal of a decision of the Administrator prior to which there was an opportunity for public comment:

(1) Except as provided under paragraph (a)(2) of this section, the petitioner shall have the burden of going forward and of persuasion to show that a finding of fact or conclusion of law underlying the decision is clearly erroneous or that an exercise of discretion

or policy determination underlying the decision is arbitrary and capricious or otherwise warrants review.

(2) The owners and operators of the source or unit involved shall have the burden of persuasion that an Acid Rain permit NO_X Budget permit, CAIR permit, or other federally enforceable permit was properly issued or should be issued.

(b) On appeal of a decision of the Administrator not covered by paragraph (a) of this section, the Administrator shall have the burden of going forward to show the rational basis for the decision. The petitioner shall have the burden of persuasion to show that a finding of fact or conclusion of law underlying the decision is clearly erroneous or that an exercise of discretion or policy determination underlying the decision is arbitrary and capricious or otherwise warrants review.

[58 FR 3760, Jan. 11, 1993, as amended at 62 FR 55488, Oct. 24, 1997; 66 FR 12978, Mar. 1, 2001; 69 FR 21645, Apr. 21, 2004; 70 FR 25339, May 12, 2005]

§ 78.13 Scheduling orders and prehearing conferences.

(a) If a request for an evidentiary hearing is granted, the Presiding Officer will issue an order scheduling the following:

(1) The filing by each party of a narrative statement of position on each factual issue in controversy.

(2) The identification of any witness that a party expects to call and of any written testimony, documents, papers, exhibits, or other materials that a party expects to introduce into evidence. At the request of the Presiding Officer, the party shall include a brief narrative summary of any witness' expected testimony and of any such materials.

(3) The filing of written testimony, in accordance with § 78.14(b) of this part, and other evidence in support of a narrative statement.

(4) The filing of any motions by any party, including motions for the production of documentation, data, or other information material to the disputed facts to be addressed at the hearing.

(b) The Presiding Officer may, on motion or *sua sponte*, schedule one or more pre-hearing conferences on the record to address any of the following:

(1) Simplification, clarification, amplification, or limitation of the issues.

(2) Admissions and stipulations of facts and determinations of the genuineness of documents.

(3) Objections to the introduction into evidence at the hearing of any written testimony or other submissions proposed by a party; *provided* that at any time before the end of the hearing, any party may make, and the Presiding Officer may consider and rule upon, a motion to strike testimony or other evidence (other than evidence included in the administrative record (if any) under § 72.63 of this chapter) on the grounds of relevance, competency, or materiality.

(4) Taking official notice of any matters.

(5) Grouping of parties with substantially similar interests to eliminate redundant evidence, motions, objections, and briefs.

(6) Such other matters that may expedite the hearing or aid in the disposition of matters in dispute.

(c) The Presiding Officer will issue an order (which may be in the form of a transcript) reciting the actions taken at any pre-hearing conferences, setting the schedule for any hearing, and stating any areas of factual and legal agreement and disagreement and the methods and procedures to be used in developing any evidence.

[58 FR 3760, Jan. 11, 1993, as amended at 70 FR 25339, May 12, 2005]

§ 78.14 Evidentiary hearing procedure.

(a) If a request for an evidentiary hearing is granted, the Presiding Officer will conduct a fair and impartial hearing on the record, take action to avoid unnecessary delay in the disposition of the proceedings, and maintain order. For these purposes, the Presiding Officer may:

(1) Administer oaths and affirmations.

(2) Regulate the course of the hearings and prehearing conferences and govern the conduct of participants.

(3) Examine witnesses.

(4) Identify and refer issues for interlocutory decision under § 78.19 of this part.

(5) Rule on, admit, exclude, or limit evidence.

(6) Establish the time for filing motions, testimony and other written evidence, and briefs and making other filings.

(7) Rule on motions and other pending procedural matters, including but not limited to motions for summary disposition in accordance with § 78.15 of this part.

(8) Order that the hearing be conducted in stages whenever the number of parties is large or the issues are numerous and complex.

(9) Allow direct and cross-examination of witnesses only to the extent the Presiding Officer determines that such direct and cross-examination may be necessary to resolve disputed issues of material fact; *provided* that no direct or cross-examination shall be allowed on questions of law or policy or regarding matters that are not subject to challenge in the evidentiary hearing.

(10) Limit public access to the hearing where necessary to protect confidential business information. The Presiding Officer will provide written notice of the hearing to the parties, and where the hearing will be open to the public, notice in the FEDERAL REGISTER no later than 15 days (or other shorter, reasonable period established by the Presiding Officer) prior to commencement of the hearings.

(11) Take any other action not inconsistent with the provisions of this part for the maintenance of order at the hearing and for the expeditious, fair and impartial conduct of the proceeding.

(b) All direct and rebuttal testimony at an evidentiary hearing shall be filed in written form, unless, upon motion and good cause shown, the Presiding Officer, in his or her discretion, determines that oral presentation of such evidence on any particular factual issue will materially assist in the efficient resolution of the issue.

(c)(1) The Presiding Officer will admit all evidence that is not irrelevant, immaterial, unduly repetitious, or otherwise unreliable or of little probative value. Evidence relating to settlement that would be excluded in the Federal courts under the Federal Rules of Evidence shall not be admissible.

(2) Whenever any evidence or testimony is excluded by the Presiding Officer as inadmissible, all such evidence will remain a part of the record as an offer of proof. The party seeking the admission of oral testimony may make an offer of proof by means of a brief statement on the record describing the testimony excluded.

(3) When two or more parties have substantially similar interests and positions, the Presiding Officer may limit the number of attorneys or authorized representatives who will be permitted to examine witnesses and to make and argue motions and objections on behalf of those parties.

(4) Rulings of the Presiding Officer on the admissibility of evidence or testimony, the propriety of direct and cross-examination, and other procedural matters will appear in the record of the hearing and control further proceedings unless reversed by the Presiding Officer or as a result of an interlocutory appeal taken under § 78.19 of this part.

(5) All objections shall be made promptly or be deemed waived; *provided* that parties shall be presumed to have taken exception to an adverse ruling. No objection shall be deemed waived by further participation in the hearing.

[58 FR 3760, Jan. 11, 1993, as amended at 62 FR 55488, Oct. 24, 1997]

§ 78.15 Motions in evidentiary hearings.

(a) Any party may make a motion to the Presiding Officer on any matter relating to the evidentiary hearing in accordance with the scheduling orders issued under § 78.13 of this part. All motions shall be in writing and served as provided in § 78.4 of this part, except those made on the record during an oral hearing before the Presiding Officer.

(b) Any party may make a motion for a summary disposition in its favor on any factual issue on the basis that there is no genuine issue of material fact. When a motion for summary disposition is made and supported, any party opposing the motion may not rest upon mere allegations or denials, but must show, by affidavit or by other materials subject to consideration by

the Presiding Officer, that there is a genuine issue of material fact.

(c) Within 10 days (or other shorter, reasonable period established by the Presiding Officer) after a motion made on the record or service of any written motion, any party may file a response to the motion.

(d) The Presiding Officer may schedule an oral argument and call for the filing of briefs on any motion. The Presiding Officer will rule on the motion within a reasonable time after the date that responses to the motion may be filed under paragraph (c) of this section and that any oral argument or filing of briefs is completed.

(e) If all factual issues are decided by summary disposition prior to the hearing, no hearing will be held and the Presiding Officer will issue a proposed decision under § 78.18 of this part. If a summary disposition is denied or if partial summary disposition is granted, the hearing shall proceed on the remaining issues.

[58 FR 3760, Jan. 11, 1993, as amended at 62 FR 55488, Oct. 24, 1997]

§ 78.16 Record of appeal proceeding.

(a) The proposed decision issued by the Presiding Officer, transcripts of oral hearings or oral arguments, written direct and rebuttal testimony, and any other written materials of any kind filed in the proceeding will be part of the record and will be available to the public in the office of the Hearing Clerk, subject to the requirements of part 2 of this chapter.

(b) Hearings and oral arguments shall be recorded as specified by the Presiding Officer, and thereupon transcribed. After the hearing or oral argument, the reporter will certify and file with the Hearing Clerk.

(1) The original transcript; and

(2) Any exhibits received or offered into evidence at the hearing.

(c) The Hearing Clerk will promptly give written notice to the parties when any transcript is available. Any party that desires a copy of the transcript may obtain a copy upon payment of costs.

(d) The Presiding Officer will allow witnesses, parties, and their counsel or representatives:

(1) Up to 7 days (or other shorter, reasonable period established by the Presiding Officer) from issuance of the notice under paragraph (c) of this section in order to file written proposed corrections of the transcript necessary to correct errors made in the transcribing; and

(2) Up to 7 days (or other shorter, reasonable period established by the Presiding Officer) from the submission of the corrections in order to file objections to the proposed corrections.

(e) The Presiding Officer will determine which, if any, corrections should be made to the transcript and incorporate them into the record.

[58 FR 3760, Jan. 11, 1993, as amended at 62 FR 55488, Oct. 24, 1997]

§ 78.17 Proposed findings and conclusions and supporting brief.

Within 45 days (or other shorter, reasonable period established by the Presiding Officer) after issuance of a notice under § 78.16(c) of this part that the complete transcript of the evidentiary hearing is available, any party may file with the Hearing Clerk proposed findings and conclusions on the issues referred to the Presiding Officer and a brief in support thereof. Briefs shall contain appropriate references to the record. The Presiding Officer may allow reply briefs.

[58 FR 3760, Jan. 11, 1993, as amended at 62 FR 55488, Oct. 24, 1997]

§ 78.18 Proposed decision.

(a) The Presiding Officer will review and evaluate the record, including the proposed findings and conclusions and any briefs filed by the parties, and issue a proposed decision on the factual, policy, and legal issues referred by the Environmental Appeals Board for decision under § 78.6(b)(2)(ii) of this part, accompanied by findings of fact and proposed conclusions of law, as appropriate, within a reasonable time after the evidentiary hearing is completed. The Hearing Clerk will promptly serve copies of the proposed decision on all parties and on the Environmental Appeals Board.

(b) The proposed decision of the Presiding Officer shall become the final

agency action under section 307 of the Act unless:

(1) A party files objections with the Environmental Appeals Board pursuant to § 78.20(a) of this part, or

(2) The Environmental Appeals Board *sua sponte* files a notice that it will review the decision under § 78.20(b) of this part.

[58 FR 3760, Jan. 11, 1993, as amended at 62 FR 55488, Oct. 24, 1997]

§ 78.19 Interlocutory appeal.

(a) Interlocutory appeal from orders or rulings of the Presiding Officer made during the course of a proceeding may be taken if the Presiding Officer certifies those orders or rulings to the Environmental Appeals Board for interlocutory appeal on the record. Any requests to the Presiding Officer to certify an interlocutory appeal shall be filed within 10 days of notice of the order or ruling and shall state briefly the grounds for the request.

(b)(1) Within 15 days of the filing of any request for interlocutory appeal, the Presiding Officer may certify an order or ruling for interlocutory appeal to the Environmental Appeals Board if:

(i) The order or ruling involves an important question on which there is substantial ground for difference of opinion, and

(ii) Either:

(A) An immediate appeal of the order or ruling will materially advance the ultimate completion of the proceeding, or

(B) A review after the proceeding is completed will be inadequate or ineffective.

(2) If the Presiding Officer takes no action within 15 days of the filing of a request for interlocutory appeal, the request shall be automatically dismissed without prejudice.

(c) If the Presiding Officer grants certification, the Environmental Appeals Board may accept or decline the interlocutory appeal within 30 days of certification. If the Environmental Appeals Board decides that certification was improperly granted, it will decline to hear the interlocutory appeal. If the Environmental Appeals Board takes no action within 30 days of certification, the interlocutory appeal shall be automatically dismissed without prejudice.

(d) If the Presiding Officer declines to certify an order or ruling for an interlocutory appeal, the order or ruling may be reviewed by the Environmental Appeals Board only upon an appeal of the proposed decision following completion of the proceedings before the Presiding Officer, except when the Environmental Appeals Board determines, upon motion of a party and in exceptional circumstances, that to delay review would not be in the public interest. Such motion shall be filed with Environmental Appeals Board within 5 days after the earlier of automatic dismissal of the request for interlocutory appeal or receipt by the party of notification that the Presiding Officer declines to certify an order or ruling for interlocutory appeal.

(e) The failure of a party to request an interlocutory appeal shall not prevent an appeal of an order or ruling as part of an appeal of a proposed decision under § 78.20 of this part.

§ 78.20 Appeal of decision of Administrator or proposed decision to the Environmental Appeals Board.

(a) Within 30 days after the issuance of a proposed decision by a Presiding Officer under this part, any party may appeal any matter set forth in the proposed decision, or any other order or ruling made during the proceeding to which the party objected during the proceeding before the Presiding Officer, by filing an objection with the Environmental Appeals Board. On appeal of an order, ruling, or proposed decision of a Presiding Officer:

(1) The party filing the objection shall have the burden of going forward to show that the order, ruling, or proposed decision is based on a finding of fact or conclusion of law that is clearly erroneous; or a policy determination or exercise of discretion that is arbitrary and capricious or otherwise warrants review; and

(2) The petitioner or the owners and operators shall have the burden of persuasion, as set forth in § 78.12(a) (1) and (2) of this part.

(b) Within 45 days (or other shorter, reasonable period established by the Environmental Appeals Board) after issuance of a proposed decision of a Presiding Officer, the Environmental

Appeals Board may issue *sua sponte* in its discretion a notice of intent to review such proposed decision. The Environmental Appeals Board will serve such notice upon all parties to the proceeding.

(c) Within a reasonable time following the filing of a petition for administrative review of a decision of the Administrator under §78.3 of this part, or, if any issues raised by such petition are referred to the Presiding Officer, the filing of objections under paragraph (a) of this section or the issuance of a notice of intent to review under paragraph (b) of this section, the Environmental Appeals Board will issue an order affirming, reversing, modifying, or remanding the decision or proposed decision, as appropriate. Prior to issuing this order, the Environmental Appeals Board may provide an opportunity for parties to file additional briefs.

(d) If the Environmental Appeals Board issues an order affirming, reversing, or modifying the decision of the Administrator, then the decision as supplemented or changed by the order, shall be final agency action.

(e) If the Environmental Appeals Board issues an order affirming, reversing, or modifying the proposed decision, the proposed decision, as supplemented or changed by the order, shall be final agency action.

(f) If the Environmental Appeals Board issues an order remanding the proceeding, then final agency action occurs upon completion of the remanded proceeding, including any appeals to the Environmental Appeals Board in the remanded proceeding.

[58 FR 3760, Jan. 11, 1993, as amended at 62 FR 55488, Oct. 24, 1997]

PART 79—REGISTRATION OF FUELS AND FUEL ADDITIVES

Subpart A—General Provisions

Sec.
79.1 Applicability.
79.2 Definitions.
79.3 Availability of information.
79.4 Requirement of registration.
79.5 Periodic reporting requirements.
79.6 Requirement for testing.
79.7 Samples for test purposes.
79.8 Penalties.

Subpart B—Fuel Registration Procedures

79.10 Application for registration by fuel manufacturer.
79.11 Information and assurances to be provided by the fuel manufacturer.
79.12 Determination of noncompliance.
79.13 Registration.
79.14 Termination of registration of fuels.

Subpart C—Additive Registration Procedures

79.20 Application for registration by additive manufacturer.
79.21 Information and assurances to be provided by the additive manufacturer.
79.22 Determination of noncompliance.
79.23 Registration.
79.24 Termination of registration of additives.

Subpart D—Designation of Fuels and Additives

79.30 Scope.
79.31 Additives.
79.32 Motor vehicle gasoline.
79.33 Motor vehicle diesel fuel.

Subpart E [Reserved]

Subpart F—Testing Requirements for Registration

79.50 Definitions.
79.51 General requirements and provisions.
79.52 Tier 1.
79.53 Tier 2.
79.54 Tier 3.
79.55 Base fuel specifications.
79.56 Fuel and fuel additive grouping system.
79.57 Emission generation.
79.58 Special provisions.
79.59 Reporting requirements.
79.60 Good laboratory practices (GLP) standards for inhalation exposure health effects testing.
79.61 Vehicle emissions inhalation exposure guideline.
79.62 Subchronic toxicity study with specific health effect assessments.
79.63 Fertility assessment/teratology.
79.64 *In vivo* micronucleus assay.
79.65 *In vivo* sister chromatid exchange assay.
79.66 Neuropathology assessment.
79.67 Glial fibrillary acidic protein assay.
79.68 *Salmonella typhimurium* reverse mutation assay.

AUTHORITY: 42 U.S.C. 7414, 7524, 7545 and 7601.

SOURCE: 40 FR 52011, Nov. 7, 1975, unless otherwise noted.

Subpart A—General Provisions

§ 79.1 Applicability.

The regulations of this part apply to the registration of fuels and fuel additives designated by the Administrator, pursuant to section 211 of the Clean Air Act (42 U.S.C. 1857f–6c, as amended by section 9, Pub. L. 91–604).

§ 79.2 Definitions.

As used in this part, all terms not defined herein shall have the meaning given them in the Act:

(a) *Act* means the Clean Air Act (42 U.S.C. 1857 *et seq.*, as amended by Pub. L. 91–604).

(b) *Administrator* means the Administrator of the Environmental Protection Agency.

(c) *Fuel* means any material which is capable of releasing energy or power by combustion or other chemical or physical reaction.

(d) *Fuel manufacturer* means any person who, for sale or introduction into commerce, produces, manufactures, or imports a fuel or causes or directs the alteration of the chemical composition of a bulk fuel, or the mixture of chemical compounds in a bulk fuel, by adding to it an additive, except:

(1) A party (other than a fuel refiner or importer) who adds a quantity of additive(s) amounting to less than 1.0 percent by volume of the resultant additive(s)/fuel mixture is not thereby considered a fuel manufacturer.

(2) A party (other than a fuel refiner or importer) who adds an oxygenate compound to fuel in any otherwise allowable amount is not thereby considered a fuel manufacturer.

(e) *Additive* means any substance, other than one composed solely of carbon and/or hydrogen, that is intentionally added to a fuel named in the designation (including any added to a motor vehicle's fuel system) and that is not intentionally removed prior to sale or use.

(f) *Additive manufacturer* means any person who produces, manufactures, or imports an additive for use as an additive and/or sells or imports for sale such additive under the person's own name.

(g) *Range of concentration* means the highest concentration, the lowest concentration, and the average concentration of an additive in a fuel.

(h) *Chemical composition* means the name and percentage by weight of each compound in an additive and the name and percentage by weight of each element in an additive.

(i) *Chemical structure* means the molecular structure of a compound in an additive.

(j) *Impurity* means any chemical element present in an additive that is not included in the chemical formula or identified in the breakdown by element in the chemical composition of such additive.

(k) *Oxygenate compound* means an oxygen-containing, ashless organic compound, such as an alcohol or ether, which may be used as a fuel or fuel additive.

[40 FR 52011, Nov. 7, 1975, as amended at 59 FR 33092, June 27, 1994; 62 FR 12571, Mar. 17, 1997]

§ 79.3 Availability of information.

The availability to the public of information provided to, or otherwise obtained by, the Administrator under this part shall be governed by part 2 of this chapter except as expressly noted in subpart F of this part.

[59 FR 33092, June 27, 1994]

§ 79.4 Requirement of registration.

(a) *Fuels.* (1) No manufacturer of any fuel designated under this part shall, after the date prescribed for such fuel in this part, sell, offer for sale, or introduce into commerce such fuel unless the Administrator has registered such fuel.

(2) No manufacturer of a registered fuel shall add or direct the addition to it of an additive which he has not previously reported unless he has notified the Administrator of such intended use, including the expected or estimated range of concentration. If necessary to meet an unforeseen production problem, however, a fuel manufacturer may use an additive that he has not previously reported provided that (i) the additive is on the current list of registered additives and (ii) the fuel manufacturer notifies the Administrator within 30 days regarding such unforeseen use and his plans regarding

continued use, including the expected or estimated range of concentration.

(3) Any designated fuel that is (i) in a research, development, or test status; (ii) sold to automobile, engine, or component manufacturers for research, development, or test purposes; or (iii) sold to automobile manufacturers for factory fill, and is not in any case offered for commercial sale to the public, shall be exempt from registration.

(4) A domestic fuel manufacturer may purchase and offer for commercial sale foreign-produced fuel containing unidentified additives provided that within 30 days of his offer for sale he notifies the Administrator of the purchase, the source of purchase, the quantity purchased, and summarized results of any tests performed to determine the acceptability of the purchased fuel to the fuel manufacturer.

(b) *Additives.* (1) No manufacturer of any fuel additive designated under this part shall, after the date by which the additive must be registered under this part, sell, offer for sale, or introduce into commerce such additive for use in any type of fuel designated under this part unless the Administrator has registered that additive for use in that type of fuel.

(2) Any designated additive that is either (i) in a research, development, or test status or (ii) sold to petroleum, automobile, engine, or component manufacturers for research, development, or test purposes, and in either case is not offered for commercial sale to the public, shall be exempt from registration.

(3) Process chemicals used by refineries during the refinery process are exempted from the requirement for registration.

(4) If an additive manufacturer prepares for sale only to fuel manufacturers (i) a blend or mixture of two or more registered additives or (ii) a blend or mixture of one or more registered additives with one or more substances containing only carbon and/or hydrogen, he will not be required to register such blend or mixture provided he will, upon request, furnish the Administrator with the names and percentages by weight of all components of such blend or mixture.

[40 FR 52011, Nov. 7, 1975, as amended at 41 FR 21324, May 25, 1976; 59 FR 33092, June 27, 1994]

§ 79.5 Periodic reporting requirements.

(a) *Fuel manufacturers.* (1) For each calendar quarter (January through March, April through June, July through September, October through December) commencing after the date prescribed for a particular fuel in subpart D, fuel manufacturers shall submit to the Administrator a report for each registered fuel showing (i) the range of concentration of each additive reported under § 79.11(a) and (ii) the volume of such fuel produced in the quarter. Reports shall be submitted within 45 days after the close of the reporting period on forms supplied by the Administrator upon request.

(2) Fuel manufacturers shall submit to the Administrator a report annually for each registered fuel providing additional data and information as specified in § 79.31(c) and (d) in the designation of the fuel in subpart D. Reports shall be submitted on or before March 31 for the preceding year or part thereof on forms supplied by the Administrator upon request. If the date prescribed for a particular fuel in subpart D or the later registration of a fuel is between October 1 and December 31, no report will be required for the period to the end of that year.

(b) *Additive manufacturers.* Additive manufacturers shall submit to the Administrator a report annually for each registered additive providing additional data and information as specified in paragraphs (c) and (d) in the designation of the additive in subpart D. Additive manufacturers shall also report annually the volume of each additive produced. Reports shall be submitted on or before March 31 for the preceding year or part thereof on forms supplied by the Administrator upon request. If the date prescribed for a particular additive in subpart D or the later registration of an additive is between October 1 and December 31, no report will be required for the period to

the end of that year. These periodic reports shall not, however, be required for any additive that is:

(1) An additive registered under another name,

(2) A blend or mixture of two or more registered additives, or

(3) A blend or mixture of one or more registered additives with one or more substances containing only carbon and/or hydrogen.

§ 79.6 Requirement for testing.

Provisions regarding testing that is required for registration of a designated fuel or fuel additive are contained in subpart F of this part.

[59 FR 33092, June 27, 1994]

§ 79.7 Samples for test purposes.

When the Administrator requires for test purposes a fuel or additive which is not readily available in the open market, he may request the manufacturer of such fuel or additive to furnish a sample in a reasonable quantity. The fuel or additive manufacturer shall comply with such request within 30 days.

§ 79.8 Penalties.

Any person who violates section 211(a) of the Act or who fails to furnish any information or conduct any tests required under this part shall be liable to the United States for a civil penalty of not more than the sum of $25,000 for every day of such violation and the amount of economic benefit or savings resulting from the violation. Civil penalties shall be assessed in accordance with paragraphs (b) and (c) of section 205 of the Act.

[58 FR 65554, Dec. 15, 1993]

Subpart B—Fuel Registration Procedures

§ 79.10 Application for registration by fuel manufacturer.

Any manufacturer of a designated fuel who wishes to register that fuel shall submit an application for registration including all of the information set forth in § 79.11. If the manufacturer produces more than one grade or brand of a designated fuel, a manufacturer may include more than one grade or brand in a single application, provided that the application includes all information required for registration of each such grade or brand by this part. Each application shall be signed by the fuel manufacturer and shall be submitted on such forms as the Administrator will supply on request.

[59 FR 33092, June 27, 1994]

§ 79.11 Information and assurances to be provided by the fuel manufacturer.

Each application for registration submitted by the manufacturer of a designated fuel shall include the following:

(a) The commercial identifying name of each additive that will or may be used in a designated fuel subsequent to the date prescribed for such fuel in subpart D;

(b) The name of the additive manufacturer of each additive named;

(c) The range of concentration of each additive named, as follows:

(1) In the case of an additive which has been or is being used in the designated fuel, the range during any 3-month or longer period prior to the date of submission;

(2) In the case of an additive which has not been used in the designated fuel, the expected or estimated range;

(d) The purpose-in-use of each additive named;

(e) The description (or identification, in the case of a generally accepted method) of a suitable analytical technique (if one is known) that can be used to detect the presence of each named additive in the designated fuel and/or to measure its concentration therein;

(f) Such other data and information as are specified in the designation of the fuel in subpart D;

(g) Assurances that the fuel manufacturer will notify the Administrator in writing and within a reasonable time of any change in:

(1) The name of any additive previously reported;

(2) The name of the manufacturer of any additive being used;

(3) The purpose-in-use of any additive;

(4) Information submitted pursuant to paragraph (e) of this section;

(h) Assurances that the fuel manufacturer will not represent, directly or indirectly, in any notice, circular, letter, or other written communication, or any written, oral, or pictorial notice or other announcement in any publication or by radio or television, that registration of the fuel constitutes endorsement, certification, or approval by any agency of the United States;

(i) The manufacturer of any fuel which will be sold, offered for sale, or introduced into commerce for use in motor vehicles manufactured after model year 1974 shall demonstrate that the fuel is substantially similar to any fuel utilized in the certification of any 1975 or subsequent model year vehicle or engine, or that the manufacturer has obtained a waiver under 42 U.S.C. 7545(f)(4); and

(j) The manufacturer shall submit, or shall reference prior submissions, including all of the test data and other information required prior to registration of the fuel by the provisions of subpart F of this part.

[40 FR 52011, Nov. 7, 1975, as amended at 59 FR 33092, June 27, 1994]

§ 79.12 Determination of noncompliance.

If the Administrator determines that an applicant for registration of a designated fuel has failed to submit all of the information required by § 79.11, or determines within the applicable period provided for Agency review that the applicant has not satisfactorily completed any testing which is required prior to registration of the fuel by any provision of subpart F of this part, he shall return the application to the manufacturer, along with an explanation of all deficiencies in the required information.

[59 FR 33093, June 27, 1994]

§ 79.13 Registration.

(a) If the Administrator determines that a manufacturer has submitted an application for registration of a designated fuel which includes all of the information and assurances required by § 79.11 and has satisfactorily completed all of the testing required by subpart F of this part, the Administrator shall promptly register the fuel and notify the fuel manufacturer of such registration.

(b) The Administrator shall maintain a list of registered fuels, which shall be available to the public upon request.

[40 FR 52011, Nov. 7, 1975, as amended at 41 FR 21324, May 25, 1976; 59 FR 33093, June 27, 1994]

§ 79.14 Termination of registration of fuels.

Registration may be terminated by the Administrator if the fuel manufacturer requests such termination in writing.

Subpart C—Additive Registration Procedures

§ 79.20 Application for registration by additive manufacturer.

Any manufacturer of a designated fuel additive who wishes to register that additive shall submit an application for registration including all of the information set forth in § 79.21. Each application shall be signed by the fuel additive manufacturer and shall be submitted on such forms as the Administrator will supply on request.

[59 FR 33093, June 27, 1994]

§ 79.21 Information and assurances to be provided by the additive manufacturer.

Each application for registration submitted by the manufacturer of a designated fuel additive shall include the following:

(a) The chemical composition of the additive with the methods of analysis identified, except that

(1) If the chemical composition is not known, full disclosure of the chemical process of manufacture will be accepted in lieu thereof;

(2) In the case of an additive for engine oil, only the name, percentage by weight, and method of analysis of each element in the additive are required provided, however, that a percentage figure combining the percentages of carbon, hydrogen, and/or oxygen may be provided unless the breakdown into percentages for these individual elements is already known to the registrant.

(3) In the case of a purchased component, only the name, manufacturer, and percent by weight of such purchased component are required if the manufacturer of the component will, upon request, furnish the Administrator with the chemical composition thereof.

(b) The chemical structure of each compound in the additive if such structure is known and is not adequately specified by the name given under ''chemical composition.'' Nominal identification is adequate if mixed isomers are present.

(c) The description (or identification, in the case of a generally accepted method) of a suitable analytical technique (if one is known) that can be used to detect the presence of the additive in any fuel named in the designation and/or to measure its concentration therein.

(d) The specific types of fuels designated under § 79.32 for which the fuel additive will be sold, offered for sale, or introduced into commerce, and the fuel additive manufacturer's recommended range of concentration and purpose-in-use for each such type of fuel.

(e) Such other data and information as are specified in the designation of the additive in subpart D.

(f) Assurances that any change in information submitted pursuant to (1) paragraphs (a), (b), (c), and (d) of this section will be provided to the Administrator in writing within 30 days of such change; and (2) paragraph (e) of this section as provided in § 79.5(b).

(g) Assurances that the additive manufacturer will not represent, directly or indirectly, in any notice, circular, letter, or other written communication or any written, oral, or pictorial notice or other announcement in any publication or by radio or television, that registration of the additive constitutes endorsement, certification, or approval by any agency of the United States.

(h) The manufacturer of any fuel additive which will be sold, offered for sale, or introduced into commerce for use in any type of fuel intended for use in motor vehicles manufactured after model year 1974 shall demonstrate that the fuel additive, when used at the recommended range of concentration, is substantially similar to any fuel additive included in a fuel utilized in the certification of any 1975 or subsequent model year vehicle or engine, or that the manufacturer has obtained a waiver under 42 U.S.C. 7545(f)(4).

(i) The manufacturer shall submit, or shall reference prior submissions, including all of the test data and other information required prior to registration of the fuel additive by the provisions of subpart F of this part.

[40 FR 52011, Nov. 7, 1975, as amended at 41 FR 21324, May 25, 1976; 59 FR 33093, June 27, 1994]

§ 79.22 Determination of noncompliance.

If the Administrator determines that an applicant for registration of a designated fuel additive has failed to submit all of the information required by § 79.21, or determines within the applicable period provided for Agency review that the applicant has not satisfactorily completed any testing which is required prior to registration of the fuel additive by any provision of subpart F of this part, he shall return the application to the manufacturer, along with an explanation of all deficiencies in the required information.

[59 FR 33093, June 27, 1994]

§ 79.23 Registration.

(a) If the Administrator determines that a manufacturer has submitted an application for registration of a designated fuel additive which includes all of the information and assurances required by § 79.21 and has satisfactorily completed all of the testing required by subpart F of this part, the Administrator shall promptly register the fuel additive and notify the fuel manufacturer of such registration.

(b) The Administrator shall maintain a list of registered additives, which shall be available to the public upon request.

[40 FR 52011, Nov. 7, 1975, as amended at 41 FR 21324, May 25, 1976; 59 FR 33093, June 27, 1994]

§ 79.24 Termination of registration of additives.

Registration may be terminated by the Administrator if the additive manufacturer requests such termination in writing.

Subpart D—Designation of Fuels and Additives

§ 79.30 Scope.

Fuels and additives designated and dates prescribed by the Administrator for the registration of such fuels and additives, pursuant to section 211 of the Act, are listed in this subpart. In addition, specific informational requirements under §§ 79.11(f) and 79.21(e) are set forth for each designated fuel or additive. Additional fuels and/or additives may be designated and pertinent dates and additional specific informational requirements prescribed as the Administrator deems advisable.

§ 79.31 Additives.

(a) All additives produced or sold for use in motor vehicle gasoline and/or motor vehicle diesel fuel are hereby designated. The Act defines the term ''*motor vehicle*'' to mean any self-propelled vehicle designed for transporting persons or property on a street or highway. For purposes of this registration, however, additives specifically manufactured and marketed for use in motorcycle fuels are excluded.

(b) All designated additives must be registered by July 7, 1976.

(c) In accordance with §§ 79.5(b) and 79.21(e), and to the extent such information is known to the additive manufacturer as a result of testing conducted for reasons other than additive registration or reporting purposes, the additive manufacturer shall furnish the highest, lowest, and average values of the impurities in each designated additive, if greater than 0.1 percent by weight. The methods of analysis in making the determinations shall also be given.

(d) In accordance with §§ 79.5(b) and 79.21(e), and to the extent such information is known to the additive manufacturer, he shall furnish summaries of any information developed by or specifically for him concerning the following items:

(1) Mechanisms of action of the additive;

(2) Reactions between the additive and the fuels listed in paragraph (a) of this section;

(3) Identification and measurement of the emission products of the additive when used in the fuels listed in paragraph (a) of this section;

(4) Effects of the additive on all emissions;

(5) Toxicity and any other public health or welfare effects of the emission products of the additive;

(6) Effects of the emission products of the additive on the performance of emission control devices/systems. Such submissions shall be accompanied by a description of the test procedures used in obtaining the information. Information will be considered to be known to the additive manufacturer if a report thereon has been prepared and circulated or distributed outside the research department or division.

(Secs. 211, 301(a), Clean Air Act as amended (40 U.S.C. 7545, 7601(a)))

[40 FR 52011, Nov. 7, 1975, as amended at 41 FR 21324, May 25, 1976; 43 FR 28490, June 30, 1978; 59 FR 33093, June 27, 1994]

§ 79.32 Motor vehicle gasoline.

(a) The following fuels commonly or commercially known or sold as motor vehicle gasoline are hereby individually designated:

(1) Motor vehicle gasoline, unleaded—motor vehicle gasoline that contains no more than 0.05 gram of lead per gallon;

(2) Motor vehicle gasoline, leaded, premium—motor vehicle gasoline that contains more than 0.05 gram of lead per gallon and is sold as ''premium;''

(3) Motor vehicle gasoline, leaded, non-premium—motor vehicle gasoline that contains more than 0.05 gram of lead per gallon but is not sold as ''premium.''

The Act defines the term ''motor vehicle'' to mean any self-propelled vehicle designed for transporting persons or property on a street or highway. For purposes of this registration, however, gasoline specifically blended and marketed for motorcycles is excluded.

(b) All designated motor vehicle gasolines must be registered by September 7, 1976.

(c) In accordance with §§ 79.5(a)(2) and 79.11(f), and to the extent such information is known to the fuel manufacturer as a result of testing conducted for reasons other than fuel registration or reporting purposes, the fuel manufacturer shall furnish the data listed below. The highest, lowest, and average values of the listed characteristics/properties are to be reported. For initial registration, data shall be given for any 3-month or longer period prior to the date of submission. For annual reports thereafter, data shall be for the calendar year, except that if the first required annual report covers a period of less than a year, the data may be for such shorter period.

(1) Hydrocarbon composition (aromatic content, olefin content, saturate content), with the methods of analysis identified;

(2) Polynuclear organic material content, sulfur content, and trace element content, with the methods of analysis identified;

(3) Reid vapor pressure;

(4) Distillation temperatures (10 percent point, end point);

(5) Research octane number and motor octane number.

(d) In accordance with §§ 79.5(a)(2) and 79.11(f), and to the extent such information is known to the fuel manufacturer, he shall furnish summaries of any information developed by or specifically for him concerning the following items:

(1) Mechanisms of action of each additive he reports;

(2) Reactions between such additives and motor vehicle gasoline;

(3) Identification and measurement of the emission products of such additives when used in motor vehicle gasoline;

(4) Effects of such additives on all emissions;

(5) Toxicity and any other public health or welfare effects of the emission products of such additives;

(6) Effects of the emission products of such additives on the performance of emission control devices/systems. Such submissions shall be accompanied by a description of the test procedures used in obtaining the information. Information will be considered to be known to the fuel manufacturer if a report thereon has been prepared and circulated or distributed outside the research department or division.

[40 FR 52011, Nov. 7, 1975, as amended at 41 FR 21324, May 25, 1976]

§ 79.33 Motor vehicle diesel fuel.

(a) The following fuels commonly or commercially known or sold as motor vehicle diesel fuel are hereby individually designated:

(1) Motor vehicle diesel fuel, grade 1–D;

(2) Motor vehicle diesel fuel, grade 2–D.

The Act defines the term ''motor vehicle'' to mean any self-propelled vehicle designed for transporting persons or property on a street or highway.

(b) All designated motor vehicle diesel fuels must be registered within 12 months after promulgation of this part.

(c) In accordance with §§ 79.5(a)(2) and 79.11(f), and to the extent such information is known to the fuel manufacturer as a result of testing conducted for reasons other than fuel registration or reporting purposes, the fuel manufacturer shall furnish the data listed below. The highest, lowest, and average values of the listed characteristics/properties are to be reported. For initial registration, data shall be given for any 3-month or longer period prior to the date of submission. For annual reports thereafter, data shall be for the calendar year, except that if the first required annual report covers a period of less than a year, the data may be for such shorter period.

(1) Hydrocarbon composition (aromatic content, olefin content, saturate content), with the methods of analysis identified;

(2) Polynuclear organic material content, sulfur content, and trace element content, with the methods of analysis identified;

(3) Distillation temperatures (90 percent point, end point);

(4) Cetane number or cetane index;

(d) In accordance with §§ 79.5(a)(2) and 79.11(f), and to the extent such information is known to the fuel manufacturer, he shall furnish summaries of

any information developed by or specifically for him concerning the following items:

(1) Mechanisms of action of each additive he reports;

(2) Reactions between such additives and motor vehicle diesel fuel;

(3) Identification and measurement of the emission products of such additives when used in motor vehicle diesel fuel;

(4) Effects of such additives on all emissions;

(5) Toxicity and any other public health or welfare effects of the emission products of such additives.

Such submission shall be accompanied by a description of the test procedures used in obtaining the information. Information will be considered to be known to the fuel manufacturer if a report thereon has been prepared and circulated or distributed outside the research department or division.

Subpart E [Reserved]

Subpart F—Testing Requirements for Registration

SOURCE: 59 FR 33093, June 27, 1994, unless otherwise noted.

§ 79.50 Definitions.

The definitions listed in this section apply only to subpart F of this part.

Additive/base fuel mixture means the mixture resulting when a fuel additive is added in specified proportion to the base fuel of the fuel family to which the additive belongs.

Aerosol additive means a chemical mixture in aerosol form generally used as a motor vehicle engine starting aid or carburetor cleaner and not recommended to be placed in the fuel tank.

Aftermarket fuel additive means a product which is added by the end-user directly to fuel in a motor vehicle or engine to modify the performance or other characteristics of the fuel, the engine, or its emissions.

Atypical element means any chemical element found in a fuel or additive product which is not allowed in the baseline category of the associated fuel family, and an ''atypical fuel or fuel additive'' is a product which contains such an atypical element.

Base fuel means a generic fuel formulated from a set of specifications to be representative of a particular fuel family.

Basic emissions means the total hydrocarbons, carbon monoxide, oxides of nitrogen, and particulates occurring in motor vehicle or engine emissions.

Bulk fuel additive means a product which is added to fuel at the refinery as part of the original blending stream or after the fuel is transported from the refinery but before the fuel is purchased for introduction into the fuel tank of a motor vehicle.

Emission characterization means the determination of the chemical composition of emissions.

Emission generation means the operation of a vehicle or engine or the vaporization of a fuel or additive/fuel mixture under controlled conditions for the purpose of creating emissions to be used for testing purposes.

Emission sampling means the removal of a fraction of collected emissions for testing purposes.

Emission speciation means the analysis of vehicle or engine emissions to determine the individual chemical compounds which comprise those emissions.

Engine Dynamometer Schedule (EDS) means the transient engine speed versus torque time sequence commonly used in heavy-duty engine evaluation. The EDS for heavy-duty diesel engines is specified in 40 CFR part 86, appendix I(f)(2).

Evaporative Emission Generator (EEG) means a fuel tank or vessel to which heat is applied to cause a portion of the fuel to evaporate at a desired rate.

Evaporative emissions means chemical compounds emitted into the atmosphere by vaporization of contents of a fuel or additive/fuel mixture.

Evaporative fuel means a fuel which has a Reid Vapor Pressure (RVP, pursuant to 40 CFR part 80, appendix ''E'') of 2.0 pounds per square inch or greater and is not supplied to motor vehicle engines by way of sealed containment and delivery systems.

Evaporative fuel additive means a fuel additive which, when mixed with its specified base fuel, causes an increase

in the RVP of the base fuel by 0.4 psi or more relative to the RVP of the base fuel alone and results in an additive/base fuel mixture whose RVP is 2.0 psi, or greater. Excluded from this definition are fuel additives used with fuels which are supplied to motor vehicle engines by way of sealed containment and delivery systems.

Federal Test Procedure (FTP) means the body of exhaust and evaporative emissions test procedures described in 40 CFR 86 for the certification of new motor vehicles to Federal motor vehicle emissions standards.

Fuel family means a set of fuels and fuel additives which share basic chemical and physical formulation characteristics and can be used in the same engine or vehicle.

Manufacturer means a person who is a fuel manufacturer or additive manufacturer as defined in § 79.2 (d) and (f).

Nitrated polycyclic aromatic hydrocarbons (NPAH) means the class of compounds whose molecular structure includes two or more aromatic rings and contains one or more nitrogen substitutions.

Non-catalyzed emissions means exhaust emissions not subject to an effective aftertreatment device such as a functional catalyst or particulate trap.

Oxygenate compound means an oxygen-containing, ashless organic compound, such as an alcohol or ether, which may be used as a fuel or fuel additive.

Polycyclic aromatic hydrocarbons (PAH) means the class of hydrocarbon compounds whose molecular structure includes two or more aromatic rings.

Relabeled additive means a fuel additive which is registered by its original manufacturer with EPA and is also registered and sold, unchanged in composition, under a different label and/or by a different entity.

Semi-volatile organic compounds means that fraction of gaseous combustion emissions which consists of compounds with greater than twelve carbon atoms and can be trapped in sorbent polymer resins.

Urban Dynamometer Driving Schedule (UDDS) means the 1372 second transient speed driving sequence used by EPA to simulate typical urban driving. The UDDS for light-duty vehicles is described in 40 CFR part 86, appendix I(a).

Vapor phase means the gaseous fraction of combustion emissions.

Vehicle classes/subclasses means the divisions of vehicle groups within a vehicle type, including light-duty vehicles, light-duty trucks, and heavy-duty vehicles as specified in 40 CFR part 86.

Vehicle type means the divisions of motor vehicles according to combustion cycle and intended fuel class, including, but not necessarily limited to, Otto cycle gasoline-fueled vehicles, Otto cycle methanol-fueled vehicles, diesel cycle diesel-fueled vehicles, and diesel cycle methanol-fueled vehicles.

Whole emissions means all components of unfiltered combustion emissions or evaporative emissions.

§ 79.51 General requirements and provisions.

(a) *Overview of requirements.* (1) All manufacturers of fuels and fuel additives that are designated for registration under this part are required to comply with the requirements of subpart F of this part either on an individual basis or as a participant in a group of manufacturers of the same or similar fuels and fuel additives, as defined in § 79.56. If manufacturers elect to comply by participation in a group, each manufacturer continues to be individually subject to the requirements of subpart F of this part, and responsible for testing under this subpart. Each manufacturer, subject to the provisions for group applications in § 79.51(b) and the special provisions in § 79.58, shall submit all Tier 1 and Tier 2 information required by §§ 79.52, 79.53 and 79.59 for each fuel or additive, except that the Tier 1 emission characterization requirements in § 79.52(b) and/or the Tier 2 testing requirements in § 79.53 may be satisfied by adequate existing information pursuant to the Tier 1 literature search requirements in § 79.52(d). The adequacy of existing information to serve in compliance with specific Tier 1 and/or Tier 2 requirements shall be determined according to the criteria and procedures specified in §§ 79.52(b) and 79.53 (c) and (d). In all cases, EPA reserves the right to require, based upon the information contained in the application or any

other information available to the Agency, that manufacturers conduct additional testing of any fuel or additive (or fuel/additive group) if EPA determines that there is inadequate information upon which to base regulatory decisions for such product(s). In any case where EPA determines that the requirements of Tiers 1 and 2 have been satisfied but that further testing is required, the provisions of Tier 3 (§ 79.54) shall apply.

(2) Laboratory facilities shall perform testing in compliance with Good Laboratory Practice (GLP) requirements as those requirements apply to inhalation toxicology studies. All studies shall be monitored by the facilities' Quality Assurance units (as specified in § 79.60).

(b) *Group Applications.* Subject to the provisions of § 79.56 (a) through (c), EPA will consider any testing requirements of this subpart to have been met for any fuel or fuel additive when a fuel or fuel additive which meets the criteria for inclusion in the same group as the subject fuel or fuel additive has met that testing requirement, provided that all fuels and additives must be individually registered as described in § 79.59(b). For purposes of this subpart, a determination of which group contains a particular fuel or additive will be made pursuant to the provisions of § 79.56 (d) and (e). Nothing in this subsection (b) shall be deemed to require a manufacturer to rely on another manufacturer's testing.

(c) *Application Procedures and Dates.* Each application submitted in compliance with this subpart shall be signed by the manufacturer of the designated fuel or additive, or by the manufacturer's agent, and shall be submitted to the address and in the format prescribed in § 79.59. A manufacturer who chooses to comply as part of a group pursuant to § 79.56 shall be covered by the group's joint application. Subject to any modifications pursuant to the special provisions in §§ 79.51(f) or 79.58, the schedule for compliance with the requirements of this subpart is as follows:

(1) *Fuels and fuel additives with existing registrations.* (i) The manufacturer of a fuel or fuel additive product which, pursuant to subpart B or C of this part, is registered as of May 27, 1994 must submit the additional basic registration data specified in § 79.59(b) before November 28, 1994.

(ii) Except as provided in paragraphs (c)(1)(vi) and (vii) of this section, the manufacturer of such products must also satisfy the requirements and time schedules in either of the following paragraphs (c)(1)(ii) (A) or (B) of this section:

(A) No later than May 27, 1997, all applicable Tier 1 and Tier 2 requirements must be submitted to EPA, pursuant to §§ 79.52, 79.53, and 79.59; or

(B) No later than May 27, 1997, all applicable Tier 1 requirements (pursuant to §§ 79.52 and 79.59), plus evidence of a contract with a qualified laboratory (or other suitable arrangement) for completion of all applicable Tier 2 requirements, must be submitted to EPA. For this purpose, a qualified laboratory is one which can demonstrate the capabilities and credentials specified in § 79.53(c)(1). In addition, by May 26, 2000, all applicable Tier 2 requirements (pursuant to §§ 79.53 and 79.59) must be submitted to EPA.

(iii) In the case of such fuels and fuel additives which, pursuant to applicable special provisions in § 79.58, are not subject to Tier 2 requirements, all other requirements (except Tier 3) must be submitted to EPA before May 27, 1997.

(iv) In the event that Tier 3 testing is also required (under § 79.54), EPA shall determine an appropriate timeline for completion of the additional requirements and shall communicate this schedule to the manufacturer according to the provisions of § 79.54(b).

(v) The manufacturer may at any time modify an existing fuel registration by submitting a request to EPA to add or delete a bulk additive to the existing registration information for such fuel product, provided that any additional additive must be registered by EPA for use in the specific fuel family to which the fuel product belongs. However, the addition or deletion of a bulk additive to a fuel registration may effect the grouping of such registered fuel under the criteria of § 79.56, and thus may effect the testing responsibilities of the fuel manufacturer under this subpart.

(vi) In regard to atypical fuels or additives in the gasoline and diesel fuel families (pursuant to the specifications in § 79.56(e)(4)(iii)(A) (*1*) and (*2*)):

(A) All applicable Tier 1 requirements, pursuant to §§ 79.52 and 79.59, must be submitted to EPA by May 27, 1997.

(B) Tier 2 requirements, pursuant to §§ 79.53 and 79.59, must be satisfied according to the deadlines in either of the following paragraphs (c)(1)(vi)(B) (*1*) or (*2*) of this section:

(*1*) All applicable Tier 2 requirements shall be submitted to EPA by November 27, 1998; or

(*2*) Evidence of a contract with a qualified laboratory (or other suitable arrangement) for completion of all applicable Tier 2 requirements shall be submitted to EPA by November 27, 1998. For this purpose, a qualified laboratory is one which can demonstrate the capabilities and credentials specified in § 79.53(c)(1). In addition, all applicable Tier 2 requirements must be submitted to EPA by November 27, 2001.

(vii) In regard to nonbaseline diesel products formulated with mixed alkyl esters of plant and/or animal origin (i.e., ''biodiesel'' fuels, pursuant to § 79.56(e)(4)(ii)(B)(*2*)):

(A) All applicable Tier 1 requirements, pursuant to §§ 79.52 and 79.59, must be submitted to EPA by March 17, 1998.

(B) Tier 2 requirements, pursuant to §§ 79.53 and 79.59, must be satisfied according to the deadlines in either of the following paragraphs (c)(1)(vii)(B) (*1*) or (*2*) of this section:

(*1*) All applicable Tier 2 requirements shall be submitted to EPA by March 17, 1998; or

(*2*) Evidence of a contract with a qualified laboratory (or other suitable arrangement) for completion of all applicable Tier 2 requirements shall be submitted to EPA by March 17, 1998. For this purpose, a qualified laboratory is one which can demonstrate the capabilities and credentials specified in § 79.53(c)(1). In addition, all applicable Tier 2 requirements must be submitted to EPA by May 27, 2000.

(2) *Registrable fuels and fuel additives.* (i) A fuel product which is not registered pursuant to subpart B of this part as of May 27, 1994 shall be considered registrable if, under the criteria established by § 79.56, the fuel can be enrolled in the same fuel/additive group with one or more currently registered fuels. A fuel additive product which is not registered for a specific type of fuel pursuant to subpart C of this part as of May 27, 1994 shall be considered registrable for that type of fuel if, under the criteria established by § 79.56, the fuel/additive mixture resulting from use of the additive product in the specific type of fuel can be enrolled in the same fuel/additive group with one or more currently registered fuels or bulk fuel additives. For the purpose of this determination, currently registered fuels and bulk additives are those with existing registrations as of the date on which EPA receives the basic registration data (pursuant to § 79.59(b)) for the product in question.

(ii) A manufacturer seeking to register under subpart B of this part a fuel product which is deemed registrable under this section, or to register under subpart C of this part a fuel additive product for a specific type of fuel for which it is deemed registrable under this section, shall submit the basic registration data (pursuant to § 79.59(b)) for that product as part of the application for registration. If the Administrator determines that the product is registrable under this section, then the Administrator shall promptly register the product, provided that the applicant has satisfied all of the other requirements for registration under subpart B or subpart C of this part, and contingent upon satisfactory submission of required information under paragraph (c)(2)(iii) of this section.

(iii) Registration of a registrable fuel or additive shall be subject to the same requirements and compliance schedule as specified in paragraph (c)(1) of this section for existing fuels and fuel additives. Accordingly, manufacturers of registrable fuels or additives may be granted and may retain registration for such products only if any applicable and due Tier 1, 2, and 3 requirements have also been satisfied by either the manufacturer of the product or the fuel/additive group to which the product belongs.

(3) *New fuels and fuel additives.* A fuel product shall be considered new if it is not registered pursuant to subpart B of this part as of May 27, 1994 and if, under the criteria established by § 79.56, it cannot be enrolled in the same fuel/additive group with one or more currently registered fuels. A fuel additive product shall be considered new with respect to a specific type of fuel if it is not expressly registered for that type of fuel pursuant to subpart C of this part as of May 27, 1994 and if, under the criteria established by § 79.56, the fuel/additive mixture resulting from use of the additive product in the specific type of fuel cannot be enrolled in the same fuel/additive group with one or more currently registered fuels or bulk fuel additives. For the purpose of this determination, currently registered fuels and bulk additives are those with existing registrations as of the date on which EPA receives the basic registration data (pursuant to § 79.59(b)) for the product in question. For such new product, the manufacturer must satisfactorily complete all applicable Tier 1 and Tier 2 requirements, followed by any Tier 3 testing which the Administrator may require, before registration will be granted.

(d) *Notifications.* Upon receipt of a manufacturer's (or group's) submittal in compliance with the requirements of this subpart, EPA will notify such manufacturer (or group) that the application has been received and what, if any, information, testing, or retesting is necessary to bring the application into compliance with the requirements of this subpart. EPA intends to provide such notification of receipt in a timely manner for each such application.

(1) *Registered fuel and fuel additive notification.* (i) The manufacturer of a registered fuel or fuel additive product who is notified that the submittal for such product contains adequate information pursuant to the Tier 1 and Tier 2 testing and reporting requirements (§§ 79.52, 79.53, and 79.59 (a) through (c)) may continue to sell, offer for sale, or introduce into commerce the registered product as permitted by the existing registration for the product under § 79.4.

(ii) If the manufacturer of a registered fuel or fuel additive product is notified that testing or retesting is necessary to bring the Tier 1 and/or Tier 2 submittal into compliance, the continued sale or importation of the product shall be conditional upon satisfactorily completing the requirements within the time frame specified in paragraph (c)(1) of this section.

(iii) EPA intends to notify the manufacturer of the adequacy of the submitted data within two years of EPA's receipt of such data. However, EPA retains the right to require that adequate data be submitted to EPA if, upon subsequent review, EPA finds that the original Tier 1 and/or Tier 2 submittal is not consistent with the requirements of this subpart. If EPA does not notify the manufacturer of the adequacy of the Tier 1 and/or Tier 2 data within two years, EPA will not hold the manufacturer liable for penalties for violating this rule for the period beginning when the data was due until the time EPA notifies the manufacturer of the violation.

(iv) If the manufacturer of a registered fuel or fuel additive product is notified (pursuant to § 79.54(b)) that Tier 3 testing is required for its product, then the manufacturer may continue to sell, offer for sale, introduce into commerce the registered product as permitted by the existing registration for the product under § 79.4. However, if the manufacturer fails to complete the specified Tier 3 requirements within the specified time, the registration of the product will be subject to cancellation under § 79.51(f)(6).

(v) EPA retains the right to require additional Tier 3 testing pursuant to the procedures in § 79.54.

(2) *New fuel and fuel additive notification.* (i) Within six months following its receipt of the Tier 1 and Tier 2 submittal for a new product (as defined in paragraph (c)(3) of this section), EPA shall notify the manufacturer of the adequacy of such submittal in compliance with the requirements of §§ 79.52, 79.53, and 79.59 (a) through (c).

(A) If EPA notifies the manufacturer that testing, retesting, or additional information is necessary to bring the Tier 1 and Tier 2 submittal into compliance, the manufacturer shall remedy all inadequacies and provide Tier 3

data, if required, before EPA shall consider the requirements for registration to have been met for the product in question.

(B) If EPA does not notify the manufacturer of the adequacy of the Tier 1 and Tier 2 submittal within six months following the submittal, the manufacturer shall be deemed to have satisfactorily completed Tiers 1 and 2.

(ii) Within six months of the date on which EPA notifies the manufacturer of satisfactory completion of Tiers 1 and 2 for a new product, or within one year of the submittal of the Tier 1 and Tier 2 data (whichever is earlier), EPA shall determine whether additional testing is currently needed under the provisions of Tier 3 and, pursuant to § 79.54(b), shall notify the manufacturer of its determination.

(A) If the manufacturer of a new fuel or fuel additive product is notified that Tier 3 testing is required for such product, then EPA shall have the authority to withhold registration until the specified Tier 3 requirements have been satisfactorily completed. EPA shall determine whether the Tier 3 requirements have been met, and shall notify the manufacturer of this determination, within one year of receiving the manufacturer's Tier 3 submittal.

(B) If EPA does not notify the manufacturer of potential Tier 3 requirements within the prescribed timeframe, then additional testing at the Tier 3 level is deemed currently unnecessary and the manufacturer shall be considered to have complied with all current registration requirements for the new fuel or additive product.

(iii) Upon completion of all current Tier 1, Tier 2, and Tier 3 requirements, and submission of an application for registration which includes all of the information and assurances required by § 79.11 or § 79.21, the registration of the new fuel or additive shall be granted, and the registrant may then sell, offer for sale, or introduce into commerce the registered product as permitted by § 79.4.

(iv) Once the new product becomes registered, EPA reserves the right to require additional Tier 3 testing pursuant to the procedures specified in § 79.54.

(e) *Inspection of a testing facility*. (1) A testing facility, whether engaged in emissions analysis or health and/or welfare effects testing under the regulations in this subpart, shall permit an authorized employee or duly designated representative of EPA, at reasonable times and in a reasonable manner, to inspect the facility and to inspect (and in the case of records also to copy) all records and specimens required to be maintained regarding studies to which this subpart applies. The records inspection and copying requirements shall not apply to quality assurance unit records of findings and problems, or to actions recommended and taken, except the EPA may seek production of these records in litigation or informal hearings.

(2) EPA will not consider reliable for purposes of showing that a test substance does or does not present a risk of injury to health or the environment any data developed by a testing facility or sponsor that refuses to permit inspection in accordance with this section. The determination that a study will not be considered reliable does not, however, relieve the sponsor of a required test of any obligation under any applicable statute or regulation to submit the results of the study to EPA.

(3) Effects of non-compliance. Pursuant to sections 114, 208, and 211(d) of the CAA, it shall be a violation of this section and a violation of 40 CFR part 79, subpart F to deny entry to an authorized employee or duly designated representative of EPA for the purpose of auditing a testing facility or test data.

(f) *Penalties and Injunctive Relief*. (1) Any person who violates these regulations shall be subject to a civil penalty of up to $25,000 for each and every day of the continuance of the violation and the economic benefit or savings resulting from the violation. Action to collect such civil penalties shall be commenced in accordance with paragraph (b) of section 205 of the Clean Air Act or assessed in accordance with paragraph (c) of section 205 of the Clean Air Act, 42 U.S.C. 7524 (b) and (c).

(2) Under section 205(b) of the CAA, the Administrator may commence a civil action for violation of this subpart in the district court of the United

States for the district in which the violation is alleged to have occurred or in which the defendant resides or has a principal place of business.

(3) Under section 205(c) of the CAA, the Administrator may assess a civil penalty of $25,000 for each and every day of the continuance of the violation and the economic benefit or savings resulting from the violation, except that the maximum penalty assessment shall not exceed $200,000, unless the Administrator and the Attorney General jointly determine that a matter involving a larger penalty amount is appropriate for administrative penalty assessment. Any such determination by the Administrator and the Attorney General shall not be subject to judicial review.

(4) The Administrator may, upon application by the person against whom any such penalty has been assessed, remit or mitigate, with or without conditions, any such penalty.

(5) The district courts of the United States shall have jurisdiction to compel the furnishing of information and the conduct of tests required by the Administrator under these regulations and to award other appropriate relief. Actions to compel such actions shall be brought by and in the name of the United States. In any such action, subpoenas for witnesses who are required to attend a district court in any district may run into any other district.

(6) *Cancellation*. (i) The Administrator of EPA may issue a notice of intent to cancel a fuel or fuel additive registration if the Administrator determines that the registrant has failed to submit in a timely manner any data required to maintain registration under this part or under section 211(b) or 211(e) of the Clean Air Act.

(ii) Upon issuance of a notice of intent to cancel, EPA will forward a copy of the notice to the registrant by certified mail, return receipt requested, at the address of record given in the registration, along with an explanation of the reasons for the proposed cancellation.

(iii) The registrant will be afforded 60 days from the date of receipt of the notice of intent to cancel to submit written comments concerning the notice, and to demonstrate or achieve compliance with the specific data requirements which provide the basis for the proposed cancellation. If the registrant does not respond in writing within 60 days from the date of receipt of the notice of intent to cancel, the cancellation of the registration shall become final by operation of law and the Administrator shall notify the registrant of such cancellation. If the registrant responds in writing within 60 days from the date of receipt of the notice of intent to cancel, the Administrator shall review and consider all comments submitted by the registrant before taking final action concerning the proposed cancellation. The registrants' communications should be sent to the following address: Director, Field Operations and Support Division, 6406J—Fuel/Additives Registration, U.S. Environmental Protection Agency, 1200 Pennsylvania Ave., NW, Washington, DC 20460.

(iv) As part of a written response to a notice of intent to cancel, a registrant may request an informal hearing concerning the notice. Any such request shall state with specificity the information the registrant wishes to present at such a hearing. If an informal hearing is requested, EPA shall schedule such a hearing within 60 days from the date of receipt of the request. If an informal hearing is held, the subject matter of the hearing shall be confined solely to whether or not the registrant has complied with the specific data requirements which provide the basis for the proposed cancellation. If an informal hearing is held, the designated presiding officer may be any EPA employee, the hearing procedures shall be informal, and the hearing shall not be subject to or governed by 40 CFR part 22 or by 5 U.S.C. 554, 556, or 557. A verbatim transcript of each informal hearing shall be kept and the Administrator shall consider all relevant evidence and arguments presented at the hearing in making a final decision concerning a proposed cancellation.

(v) If a registrant who has received a notice of intent to cancel submits a timely written response, and the Administrator decides after reviewing the response and the transcript of any informal hearing to cancel the registration, the Administrator shall issue a

final cancellation order, forward a copy of the cancellation order to the registrant by certified mail, and promptly publish the cancellation order in the FEDERAL REGISTER. Any cancellation order issued after receipt of a timely written response by the registrant shall become legally effective five days after it is published in the FEDERAL REGISTER.

(g) *Modification of Regulation.* (1) In special circumstances, a manufacturer subject to the registration requirements of this rule may petition the Administrator to modify the mandatory testing requirements in the test standard for any test required by this rule by application to Director, Field Operations and Support Division, at the address in paragraph (f)(6)(iii) of this section.

(i) Such request shall be made as soon as the test sponsor is aware that the modification is necessary, but in no event shall the request be made after 30 days following the event which precipitated the request.

(ii) Upon such request, the Administrator may, in circumstances which are outside the control of the manufacturer(s) or his/their agent and which could not have been reasonably foreseen or avoided, modify the mandatory testing requirements in the rule if such requirements are infeasible.

(iii) If the Administrator determines that such modifications would not significantly alter the scope of the test, EPA will not ask for public comment before approving the modification. The Administrator will notify the test sponsor by certified mail of the response to the request. EPA will place copies of each application and EPA response in the public docket. EPA will publish a notice in the FEDERAL REGISTER annually describing such changes which have occurred during the previous year. Until such FEDERAL REGISTER notice is published, any modification approved by EPA shall apply only to the person or group who requested the modification; EPA shall state the applicability of each modification in such notice.

(iv) Where, in EPA's judgment, the requested modification of a test standard would significantly change the scope of the test, EPA will publish a notice in the FEDERAL REGISTER requesting comment on the request and proposed modification. However, EPA may approve a requested modification of a test standard without first seeking public comment if necessary to preserve the validity of an ongoing test undertaken in good faith.

(2) [Reserved]

(h) *Special Requirements for Additives.* When an additive is the test subject, the following rules apply:

(1) All required emission characterization and health effects testing procedures shall be performed on the mixture which results when the additive is combined with the base fuel for the appropriate fuel family (as specified in § 79.55) at the maximum concentration recommended by the additive manufacturer pursuant to § 79.21(d). This combination shall be known as the additive/base fuel mixture.

(i) The appropriate fuel family to be utilized for the additive/base fuel mixture is the fuel family which contains the specific type(s) of fuel for which the additive is presently registered or for which the manufacturer of the additive is seeking registration.

(ii) Additives belonging to more than one fuel family.

(A) If an additive product is registered in two or more fuel families as of May 27, 1994, then the manufacturer of that additive is responsible for testing (or participating in group testing of) the respective additive/base fuel mixtures in compliance with the requirements of this subpart for each fuel family in which the manufacturer wishes to maintain a registration for its additive.

(B) If a manufacturer is seeking to register such additive in two or more fuel families then, for testing and registration purposes, the additive shall be considered to be a member of each fuel family in which the manufacturer is seeking registration. The manufacturer is responsible for testing (or participating in group testing of) the respective additive/base fuel mixture in compliance with the requirements of this subpart for each fuel family in which the manufacturer wishes to obtain a product registration for its additive.

(iii) In the case of the methanol fuel family, which contains two base fuels (M100 and M85 base fuels, pursuant to § 79.55(d)), the applicable base fuel is the one which represents the fuel/additive group (specified in § 79.56(e)(4)(i)(C)) containing fuels of which the most gallons are sold annually.

(iv) Aftermarket additives which are intended by the manufacturer to be added to the fuel tank only at infrequent intervals shall be applied according to the manufacturer's specifications during mileage accumulation, pursuant to § 79.57(c). However, during emission generation and testing, each tankful of fuel used must contain the fuel additive at its maximum recommended level. If the additive manufacturer believes that this maximum treatment rate will cause adverse effects to the test engine and/or that the engine's emissions may be subject to artifacts due to overuse of the additive, then the manufacturer may submit a request to EPA for modification of this requirement and related test procedures. Such request must include objective evidence that the modification(s) are needed, along with data demonstrating the maximum concentration of the additive which may actually reach the fuel tanks of vehicles in use.

(v) Additives produced exclusively for use in #1 diesel fuel shall be tested in the diesel base fuel specified in § 79.55(c), even though that base fuel is formulated with #2 diesel fuel. If a manufacturer is concerned that emissions generated from this combination of fuel and additive are subject to artifacts due to this blending, then that manufacturer may submit a request for a modification in test procedure requirements to the EPA. Any such request must include supporting test results and suggested test modifications.

(vi) Bulk additives which are used intermittently for the direct purpose of conditioning or treating a fuel during storage or transport, or for treating or maintaining the storage, pipeline, and/or other components of the fuel distribution system itself and not the vehicle/engine for which the fuel is ultimately intended, shall, for purposes of this program, be added to the base fuel at the maximum concentration recommended by the additive manufacturer for treatment of the fuel or distribution system component. However, if the additive manufacturer believes that this treatment rate will cause adverse effects to the test engine and/or that the engine's emissions may be subject to artifacts due to overuse of the additive, then the manufacturer may submit a request to EPA for modification of this requirement and related test procedures. Such request must include objective evidence that the modification(s) are needed, along with data demonstrating the maximum concentration of the additive which may actually reach the fuel tanks of vehicles in use.

(2) EPA shall use emissions speciation and health effects data generated in the analysis of the applicable base fuel as control data for comparison with data generated for the additive/base fuel mixture.

(i) The base fuel control data may be:

(A) Generated internally as an experimental control in conjunction with testing done in compliance with registration requirements for a specific additive; or

(B) Generated externally in the course of testing different additive(s) belonging to the same fuel family, or in the testing of a base fuel serving as representative of the baseline group for the respective fuel family pursuant to § 79.56(e)(4)(i).

(ii) Control data generated using test equipment (including vehicle model and/or engine, or Evaporative Emissions Generator specifications, as appropriate) and protocols identical or nearly identical to those used in emissions and health effects testing of the subject additive/base fuel mixture would be most relevant for comparison purposes.

(iii) If an additive manufacturer chooses the same vehicle/engine to independently test the base fuel as an experimental control prior to testing the additive/base fuel mixture, then the test vehicle/engine shall undergo two mileage accumulation periods, pursuant to § 79.57(c). The initial mileage accumulation period shall be performed using the base fuel alone. After base fuel testing, and prior to testing of the

additive/base fuel mixture, a second mileage accumulation period shall be performed using the additive/base fuel mixture. The procedures outlined in this paragraph shall not preclude a manufacturer from testing a base fuel and the manufacturer's additive/base fuel mixture separately in identical, or nearly identical, vehicles/engines.

(i) *Multiple Test Potential for Non-Baseline Products.* (1) When the composition information reported in the registration application or basic registration data for a gasoline or diesel product meets criteria for classification as a non-baseline product (pursuant to § 79.56(e)(3)(i)(B) or § 79.56(e)(3)(ii)(B)), then the manufacturer is responsible for testing (or participating in group testing) of a separate formulation for each reported oxygenating compound, specified class of oxygenating compounds, or other substance which defines a separate non-baseline fuel/additive group pursuant to § 79.56(e)(4)(ii)(A) or (B). For each such substance, testing shall be performed on a mixture of the relevant substance in the appropriate base fuel, formulated according to the specifications for the corresponding group representatives in § 79.56(e)(4)(ii).

(2) When the composition information reported in the registration application or basic registration data for a non- baseline gasoline product contains a range of total oxygenate concentration-in-use which encompasses gasoline formulations with less than 1.5 weight percent oxygen as well as gasoline formulations with 1.5 weight percent oxygen or more, then the manufacturer is required to test (or participate in applicable group testing of) a baseline gasoline formulation as well as one or more non-baseline gasoline formulations as described in paragraph (h)(1) of this section.

(3) When the composition information reported in the registration application or basic registration data for a non- baseline diesel product contains a range of total oxygenate concentration-in-use which encompasses diesel formulations with less than 1.0 weight percent oxygen as well as diesel formulations with 1.0 weight percent oxygen or more, then the manufacturer is required to test (or participate in applicable group testing) of a baseline diesel formulation as well as one or more non-baseline diesel formulations as described in paragraph (h)(1) of this section.

(4) The presence in a particular oxygenating additive of small amounts of other unintended oxygenate compounds as byproducts of the manufacturing process of the given oxygenating additive does not affect the grouping of that additive and does not create multiple testing responsibilities for manufacturers who blend that additive into fuel.

(j) *Multiple Test Potential for Atypical Fuel Formulations.* When the composition information reported in the registration application or basic registration data for a fuel product includes more than one atypical bulk additive product (pursuant to § 79.56(e)(2)(iii)), and when these additives belong to different fuel/additive groups (pursuant to § 79.56(e)(4)(iii)), then:

(1) When such disparate additive products are for the same purpose-in-use and are not ordinarily used in the fuel simultaneously, the fuel manufacturer shall be responsible for testing (or participating in the group testing of) a separate formulation for each such additive product. Testing related to each additive product shall be performed on a mixture of the additive in the applicable base fuel, as described in paragraph (g)(1) of this section, or by participation in the costs of testing the designated representative of the fuel/additive group to which each separate atypical additive product belongs.

(2) When the disparate additive products are not for the same purpose-in-use, the fuel manufacturer shall nevertheless be responsible for testing a separate formulation for each such additive product, as described in paragraph (g)(1) of this section, if these additives are not ordinarily blended together in the same commercial formulation of the fuel.

(3) When the disparate additive products are ordinarily blended together in the same commercial formulation of the fuel, then the fuel manufacturer shall be responsible for the testing of a single test formulation containing all

such simultaneously used atypical additive products. Alternatively, this responsibility can be satisfied by enrolling such fuel product in a group which includes other fuel or additive products with the same total combination of atypical elements as that occurring in the fuel product in question. If the basic registration data for the subject fuel includes any alternative additives which contain atypical elements not represented in the test formulation, then the fuel manufacturer is also responsible for testing a separate formulation for each such additional disparate additive product.

(k) *Emission Control System Testing.* If any information submitted in accordance with this subpart or any other information available to EPA shows that a fuel or fuel additive may have a deleterious effect on the performance of any emission control system or device currently in use or which has been developed to a point where in a reasonable time it would be in general use were such effect avoided, EPA may, in its judgment, require testing to determine whether such effects in fact exist. Such testing will be required in accordance with such protocols and schedules as the Administrator shall reasonably require and shall be paid for by the fuel or fuel additive manufacturer.

[59 FR 33093, June 27, 1994, as amended at 61 FR 36511, July 11, 1996; 62 FR 12575, Mar. 17, 1997]

§ 79.52 Tier 1.

(a) *General Specifications.* Tier 1 requires manufacturers of designated fuels or fuel additives (or groups of manufacturers pursuant to § 79.56) to supply to the Administrator the identity and concentration of certain emission products of such fuels or additives and any available information regarding the health and welfare effects of the whole and speciated emissions of such fuels or additives. In addition to any information required under § 79.59 and in conformance with the reporting requirements thereof, manufacturers shall provide, pursuant to the timing provisions of § 79.51(c), the following information.

(b) *Emissions Characterization.* Manufacturers must provide a characterization of the emission products which are generated by evaporation (if required pursuant to § 79.58(b)) and by combustion of the fuel or additive/base fuel mixture in a motor vehicle. For this purpose, manufacturers may perform the characterization procedures described in this section or may rely on existing emission characterization data. To be considered adequate in lieu of performing new emission characterization procedures, the data must be the result of tests using the product in question or using a fuel or additive/base fuel mixture meeting the same grouping criteria as the product in question. In addition, the emissions must be generated in a manner reasonably similar to those described in § 79.57, and the characterization procedures must be adequately performed and documented and must give results reasonably comparable to those which would be obtained by performing the procedures described herein. Reports of previous tests must be sufficiently detailed to allow EPA to judge the adequacy of protocols, techniques, and conclusions. After the manufacturer's submittal of such data, if EPA finds that the manufacturer has relied upon inadequate test data, then the manufacturer will not be considered to be in compliance until the corresponding tests have been conducted and the results submitted to EPA.

(1) *General Provisions.* (i) The emissions to be characterized shall be generated, collected, and stored according to the processes described in § 79.57. Characterization of combustion and evaporative emissions shall be performed separately on each emission sample collected during the applicable emission generation procedure.

(ii) As provided in § 79.57(d), if the emission generation vehicle/engine is ordinarily equipped with an emission aftertreatment device, then all requirements in this section for the characterization of combustion emissions must be completed both with and without the aftertreatment device in a functional state. The emissions shall be generated three times (on three different days) without a functional aftertreatment device and, if applicable, three times (on three different days) with a functional aftertreatment device, and each such time shall be

analyzed according to the remaining provisions in this paragraph (b) of this section.

(iii) Measurement of background emissions: It is required that ambient/dilution air be analyzed for levels of background chemical species present at the time of emissions sampling (for both combustion and evaporative emissions) and that sample values be corrected by substracting the concentrations contributed by the ambient/dilution air. Background chemical species measurement/analysis during the FTP is specified in §§ 86.109–94(c)(5) and 86.135–94 of this chapter.

(iv) Concentrations of emission products shall be reported either in units of grams per mile (g/mi) or grams per brake-horsepower/hour (g/bhp-hr) (for chassis dynamometer and engine dynamometer test configurations, respectively), as well as in units of weight percent of measured total hydrocarbons.

(v) Laboratory practice must be of high quality and must be consistent with state-of-the-art methods as presented in current environmental and analytical chemistry literature. Examples of analytical procedures which may be used in conducting the emission characterization/speciation requirements of this section can be found among the references in paragraph (b)(5) of this section.

(2) Characterization of the combustion emissions shall include, for products in all fuel families (except when expressly noted in this section):

(i) Determination of the concentration of the basic emissions as follows: total hydrocarbons, carbon monoxide, oxides of nitrogen, and particulates. Manufacturers are referred to the vehicle certification procedures in 40 CFR part 86, subparts B and D (§§ 86.101 through 86.145 and §§ 86.301 through 86.348) for guidance on the measurement of the basic emissions of interest to this subpart.

(ii) Characterization of the vapor phase of combustion emissions, as follows:

(A) Determination of the identity and concentration of individual species of hydrocarbon compounds containing 12 or fewer carbon atoms. Such characterization shall begin within 30 minutes after emission collection is completed.

(B) Determination of the identity and concentration of individual species of aldehyde and ketone compounds containing eight or fewer carbon atoms. Characterization of these emissions captured in cartridges shall be performed within two weeks if the cartridge is stored at room temperature, and one month if the cartridge is stored at 0 °C or less. If the emissions are sampled using the impinger method, the sample must be stored in a capped sample vial at 0 °C or less and characterized within one week.

(C) Determination of the identity and concentration of individual species of alcohol and ether compounds containing six or fewer carbon atoms, for those fuels and additive/base fuel mixtures which contain alcohol and/or ether compounds containing from one to six carbon atoms in the uncombusted state. For fuel and additive formulations containing alcohols or ethers with more than six carbon atoms in the uncombusted state, alcohol and ether species with that higher number of carbon atoms or less must be identified and measured in the emissions. Such characterization shall begin within four hours after emission collection is completed.

(iii) Characterization of the semivolatile and particulate phases of combustion emissions to identify and measure polycyclic aromatic compounds, as follows:

(A) Analysis for polycyclic aromatic compounds shall not be conducted at or soon after the start of a recommended engine lubricant change interval.

(B) Analysis for polycyclic aromatic hydrocarbons (PAHs) and nitrated polycyclic aromatic hydrocarbons (NPAHs), specified in paragraph (b)(2)(iii)(D) of this section, need not be done for any fuels and additives in the methane or propane fuel families, nor for fuels and additives in the atypical categories of any other fuel families, pursuant to the definitions of such families and categories in § 79.56.

(C) Analysis for poly-chlorinated dibenzodioxins and dibenzofurans (PCDD/PCDFs), specified in paragraph (b)(2)(iii)(E) of this section, is required

only for fuels and additives which contain chlorine as an atypical element, pursuant to paragraph (b)(2)(iv) of this section, which requires all individual emission products containing atypical elements to be determined for atypical fuels and additives. However, manufacturers of baseline and nonbaseline fuels and fuel additives in all fuel families, except those in the methane and propane fuel families, are strongly encouraged to conduct these analyses on a voluntary basis.

(D) The analytical method used to measure species of PAHs and NPAHs should be capable of detecting at least 1 ppm (equivalent to 0.001 microgram (μg) of compound per milligram of organic extract) of these compounds in the extractable organic matter. The concentration of each individual PAH or NPAH compound identified shall be reported in units of microgram per mile or nanograms per brake-horsepower/hour (for chassis dynamometer and engine dynamometer test configurations, respectively). Each compound which is present at 0.001 μg per mile (0.5 nanograms per brake-horsepower/hour) or more must be identified, measured, and reported. The following individual species shall be measured:

(*1*) PAHs:

(*i*) Benzo(*a*)anthracene;

(*ii*) Benzo[*b*]fluoranthene;

(*iii*) Benzo[*k*]fluoranthene;

(*iv*) Benzo(*a*)pyrene;

(*v*) Chrysene;

(*vi*) Dibenzo[*a,h*]anthracene; and

(*vii*) Indeno[1,2,3-*c,d*]pyrene.

(*2*) NPAHs:

(*i*) 7-Nitrobenzo[*a*]anthracene;

(*ii*) 6-Nitrobenzo[*a*]pyrene;

(*iii*) 6-Nitrochrysene;

(*iv*) 2-Nitrofluorene; and

(*v*) 1-Nitropyrene.

(E) The analytical method used to measure species and classes of PCDD/PCDFs should be capable of detecting at least 1 part per trillion (ppt) (equivalent to 0.001 picogram (pg) of compound per milligram of organic extract) of these compounds in the extractable organic matter. The concentration of each individual PCDD/PCDF compound identified shall be reported in units of picograms (pg) per mile or picograms per brake-horsepower/hour (for chassis dynamometer and engine dynamometer test configurations, respectively). Each compound which is present at 0.5 pg/mile (0.3 pg/bhp-hr) or more must be identified, measured, and reported.

(*1*) With respect to measurement of PCDD/PCDFs only, the liquid extracts from the particulate and semi-volatile emissions fractions may be combined into one sample for analysis.

(*2*) The manufacturer is referred to 40 CFR part 60, appendix A, Method 23 for a protocol which may be used to identify and measure any potential PCDD/PCDFs which might be present in exhaust emissions from a fuel or additive/base fuel mixture.

(*3*) The following individual compounds and classes of compounds of PCDD/PCDFs shall be identified and measured:

(*i*) Individual tetra-chloro-substituted dibenzodioxins (tetra-CDDs);

(*ii*) Individual tetra-chloro-substituted dibenzofurans (tetra-CDFs);

(*iii*) Penta-CDDs and penta-CDFs, as one class;

(*iv*) Hexa-CDDs and hexa-CDFs, as one class;

(*v*) Hepta-CDDs and hepta-CDFs as one class; and

(*vi*) Octo-CDDs and octo-CDFs as one class.

(iv) With respect to all phases (vapor, semi-volatile, and particulate) of combustion emissions generated from those fuels and additive/base fuel mixtures classified in the atypical categories (pursuant to § 79.56), the identity and concentration of individual emission products containing such atypical elements shall also be determined.

(3) For evaporative fuels and evaporative fuel additives, characterization of the evaporative emissions shall include:

(i) Determination of the concentration of total hydrocarbons for the applicable vehicle type and class in 40 CFR part 86, subpart B (§§ 86.101 through 86.145).

(ii) Determination of the identity and concentration of individual species of hydrocarbon compounds containing 12 or fewer carbon atoms. Such characterization shall begin within 30 minutes after emission collection is completed.

(iii) In the case of those fuels and additive/base fuel mixtures which contain

alcohol and/or ether compounds in the uncombusted state, determination of the identity and concentration of individual species of alcohol and ether compounds containing six or fewer carbon atoms. For fuel and additive formulations containing alcohols or ethers with more than six carbon atoms in the uncombusted state, alcohol and ether species with that higher number of carbon atoms or less must be identified and measured in the emissions. Such characterization shall begin within four hours after emission collection is completed.

(iv) In the case of those fuels and additive/base fuel mixtures which contain atypical elements, determination of the identity and concentration of individual emission products containing such atypical elements.

(4) *Laboratory quality control.* (i) At a minimum, laboratories performing the procedures specified in this section shall conduct calibration testing of their emissions characterization equipment before each new fuel/additive product test start-up. Known samples representative of the compounds potentially to be found in emissions from the product to be characterized shall be used to calibrate such equipment.

(ii) Laboratories performing the procedures specified in this section shall agree to permit quality control inspections by EPA, and for this purpose shall admit any EPA Enforcement Officer, upon proper presentation of credentials, to any facility where vehicles are conditioned or where emissions are generated, collected, stored, sampled, or characterized in meeting the requirements of this section. Such laboratory audits may include EPA distribution of ''blind'' samples for analysis by participating laboratories.

(5) *References.* For additional background information on the emission characterization procedures outlined in this paragraph, the following references may be consulted:

(i) ''Advanced Emission Speciation Methodologies for the Auto/Oil Air Quality Improvement Program—I. Hydrocarbons and Ethers,'' Auto Oil Air Quality Improvement Research Program, SP–920, 920320, SAE, February 1992.

(ii) ''Advanced Speciation Methodologies for the Auto/Oil Air Quality Improvement Research Program—II. Aldehydes, Ketones, and Alcohols,'' Auto Oil Air Quality Improvement Research Program, SP–920, 920321, SAE, February 1992.

(iii) ASTM D 5197–91, ''Standard Test Method for Determination of Formaldehyde and Other Carbonyl Compounds in Air (Active Sampler Methodology).''

(iv) Johnson J. H., Bagley, S. T., Gratz, L. D., and Leddy, D. G., ''A Review of Diesel Particulate Control Technology and Emissions Effects—1992 Horning Memorial Award Lecture,'' SAE Technical Paper Series, SAE 940233, 1994.

(v) Keith *et al.*, ACS Committee on Environmental Improvement, ''Principles of Environmental Analysis,'' The Journal of Analytical Chemistry, Volume 55, pp. 2210–2218, 1983.

(vi) Perez, J.M., Jabs, R.E., Leddy, D.G., eds. ''Chemical Methods for the Measurement of Unregulated Diesel Emissions (CRC-APRAC Project No. CAPI–1–64), Coordinating Research Council, CRC Report No. 551, August, 1987.

(vii) Schuetzle, D., ''Analysis of Nitrated Polycyclic Aromatic Hydrocarbons in Diesel Particulates,'' Analytical Chemistry, Volume 54, pp. 265–271, 1982.

(viii) Siegl, W.O., *et al.*, ''Improved Emissions Speciation Methodology for Phase II of the Auto/Oil Air Quality Improvement Research Program—Hydrocarbons and Oxygenates'', SAE Technical Paper Series, SAE 930142, 1993.

(ix) Tejada, S. B. *et al.*, ''Analysis of Nitroaromatics in Diesel and Gasoline Car Emissions,'' SAE Paper No. 820775, 1982.

(x) Tejada, S. B. *et al.*, ''Fluorescence Detection and Identification of Nitro Derivatives of Polynuclear Aromatic Hydrocarbons by On-Column Catalytic Reduction to Aromatic Amines,'' Analytical Chemistry, Volume 58, pp. 1827–1834, July 1986.

(xi) ''Test Method for Determination of C1–C4 Alcohols and MTBE in Gasoline by Gas Chromatography,'' 40 CFR part 80, appendix F.

(c) [Reserved]

(d) *Literature Search*. (1) Manufacturers of fuels and fuel additives shall conduct a literature search and compilation of information on the potential toxicologic, environmental, and other public welfare effects of the emissions of such fuels and additives. The literature search shall include all available relevant information from in-house, industry, government, and public sources pertaining to the emissions of the subject fuel or fuel additive or the emissions of similar fuels or additives, with such similarity determined according to the provisions of § 79.56.

(2) The literature search shall address the potential adverse effects of whole combustion emissions, evaporative emissions, relevant emission fractions, and individual emission products of the subject fuel or fuel additive except as specified in the following paragraph. The individual emission products to be included are those identified pursuant to the emission characterization procedures specified in paragraph (b) of this section, other than carbon monoxide, carbon dioxide, nitrogen oxides, benzene, 1,3-butadiene, acetaldehyde, and formaldehyde.

(3) In the case of the individual emission products of non-baseline or atypical fuels and additives (pursuant to § 79.56(e)(2)), the literature data need not be submitted for those emission products which are the same as the combustion emission products of the respective base fuel for the product's fuel family (pursuant to § 79.55). For this purpose, data on the base fuel emission products for the product's fuel family:

(i) May be found in the literature of previously-conducted, adequate emission speciation studies for the base fuel, or for a fuel or additive/fuel mixture capable of grouping with the base fuel (see, for example, the references in paragraph (b)(5) of this section).

(ii) May be compiled while gathering internal control data during emissions characterization studies on the manufacturer's non-baseline or atypical product; or

(iii) May be obtained from various manufacturers in the course of their testing different additive(s) belonging to the same fuel family, or in the testing of a base fuel serving as representative of the baseline group for the respective fuel family.

(e) *Data bases*. The literature search must include the results of searching appropriate commercially available chemical, toxicologic, and environmental databases. The databases shall be searched using, at a minimum, CAS numbers (when applicable), chemical names, and common synonyms.

(f) *Search period*. The literature search shall cover a time period beginning at least thirty years prior to the date of submission of the reports specified in §§ 79.59(b) through (c) and ending no earlier than six months prior to the date on which testing is commenced or reports are submitted in compliance with this subpart.

(g) *References*. Information on base fuel emission inventories may be found in references in paragraphs (b)(5)(i) through (xi) of this section, as well as in the following:

(1) Auto/Oil Air Quality Improvement Research Program, Technical Bulletin #1, December 1990.

(2) Keith *et al.*, ACS Committee on Environmental Improvement, ''Principles of Environmental Analysis,'' The Journal of Analytical Chemistry, Volume 55, pp. 2210–2218, 1983.

(3) ''The Composition of Gasoline Engine Hydrocarbon Emissions—An Evaluation of Catalyst and Fuel Effects''—SAE 902074 and ''Speciated Hydrocarbon Emissions from Aromatic, Olefin, and Paraffinic Model Fuels''—SAE 930373.

[59 FR 33093, June 27, 1994, as amended at 61 FR 36511, July 11, 1996; 62 FR 12571, Mar. 17, 1997]

§ 79.53 Tier 2.

(a) *Generally*. Subject to the provisions of § 79.53(b) through (d), the combustion emissions of each fuel or fuel additive subject to testing under this subpart must be tested in accordance with each of the testing guidelines in §§ 79.60 through 79.68, except that fuels and additives in the methane and propane fuel families (pursuant to § 79.56(e)(1)(v) and (vi)) need not undergo the Salmonella mutagenicity assay in § 79.68). Similarly, subject to the provisions of § 79.53(b) through (d), the

evaporative emissions of each designated evaporative fuel and each designated evaporative fuel additive subject to testing under this subpart must be tested according to each of the testing guidelines in §§ 79.60 through 79.67 (excluding § 79.68, *Salmonella typhimurium* Reverse Mutation Assay).

(b) *Manufacturer Determination*. Manufacturers shall determine whether the information gathered pursuant to the literature search in § 79.52(d) contains the results of adequately performed and adequately documented previous testing which provides information reasonably comparable to that supplied by the health tests described in §§ 79.62 through 79.68 regarding the carcinogenicity, mutagenicity, neurotoxicity, teratogenicity, reproductive/fertility measures, and general toxicity effects of the emissions of the fuel or additive. When manufacturers make an affirmative determination, they need submit only the information gathered pursuant to § 79.52(d) for such tests. EPA maintains final authority in judging whether the information is an adequate substitution in lieu of conducting the associated tests. EPA's determination of the adequacy of existing information shall be guided by the considerations described in paragraph (d) of this section. If EPA finds that the manufacturer has relied upon inadequate test data, then the manufacturer will not be considered to be in compliance until the corresponding tests have been conducted and the results submitted to EPA.

(c) *Testing*. (1) All testing required pursuant to this section must be done in accordance with the procedures, equipment, and facility requirements described in §§ 79.57, 79.60, and 79.61 regarding emissions generation, good laboratory practices, and inhalation exposure testing, respectively, as well as any other requirements described in this subpart. The laboratory conducting the animal studies shall be registered and in good standing with the United States Department of Agriculture and regularly inspected by United States Department of Agriculture veterinarians. In addition, the facility must be accredited by a generally recognized independent organization which sets laboratory animal care standards. Use of inadequate test protocols or substandard laboratory techniques in performing any testing required by this subpart may result in cancellation of all affected registrations.

(2) Carcinogenic or mutagenic effects in animals from emissions exposures shall be determined pursuant to § 79.64 *In vivo* Micronucleus Assay, § 79.65 *In vivo* Sister Chromatid Exchange Assay, and § 79.68 *Salmonella typhimurium* Reverse Mutation Assay. Teratogenic effects and reproductive toxicity shall be examined pursuant to § 79.63 Fertility Assessment/Teratology. General toxicity and pulmonary effects shall be determined pursuant to § 79.62 Subchronic Toxicity Study with Specific Health Effect Assessments. Neurotoxic effects shall be determined pursuant to § 79.66 Neuropathology Assessment and § 79.67 Glial Fibrillary Acidic Protein Assay.

(d) *EPA Determination*. (1) After submission of all information and testing, EPA in its judgment shall determine whether previously conducted tests relied upon in the registration submission are adequately performed and documented and provide information reasonably comparable to that which would be provided by the tests described herein. Manufacturers' submissions shall be sufficiently detailed to allow EPA to judge the adequacy of protocols, techniques, experimental design, statistical analyses, and conclusions. Studies shall be performed using generally accepted scientific principles, good laboratory techniques, and the testing guidelines specified in these regulations.

(2) EPA shall give appropriate weight when making this determination to the following factors:

(i) The age of the data;

(ii) The adequacy of documentation of procedures, findings, and conclusions;

(iii) The extent to which the testing conforms to generally accepted scientific principles and practices;

(iv) The type and number of test subjects;

(v) The number and adequacy of exposure concentrations, *i.e.*, emission dilutions;

(vi) The degree to which the tested emissions were generated by procedures and under conditions reasonably comparable to those set forth in § 79.57; and

(vii) The degree to which the test procedures conform to the testing guidelines set forth in §§ 79.60 through 79.68 and/or furnish information comparable to that provided by such testing.

(3) The test animals shall be rodents, preferably a strain of rat, and testing shall include all of the endpoints covered in §§ 79.62 through 79.68. All studies shall be properly executed, with appropriate documentation, and in accord with the individual health testing guidelines (§§ 79.60 through 79.68) of this part, e.g., 90-day, 6-hour per day exposure, minimum.

(4) In general, the data in a manufacturer's registration submittal shall be adequate if the duration of a test's exposure period is at least as long, in days and hours, as the inhalation exposure specified in the related health test guideline(s). Data from tests with shorter exposure durations than those specified in the guidelines may be acceptable if the test results are positive (*i.e.*, exhibit adverse effects) and/or include a demonstrable concentration-response relationship.

(5) Data in support of a manufacturer's registration submittal shall directly address the effects of inhalation exposure to the whole evaporative and exhaust emissions of the respective fuel or additive or to the whole evaporative and exhaust emissions of other fuels or additives which satisfy the criteria in § 79.56 for classification into the same group as the subject fuel or fuel additive. Data obtained in the testing of a raw liquid fuel or additive/base fuel mixture or a raw, aerosolized fuel or additive/base fuel mixture shall not be adequate to support a manufacturer's registration submittal. Data from testing of evaporative emissions cannot substitute for test data on combustion emissions. Data from testing of combustion emissions cannot substitute for test data on evaporative emissions.

§ 79.54 Tier 3.

(a) *General Criteria for Requiring Tier 3 Testing.* (1) Tier 3 testing shall be required of a manufacturer or group of manufacturers at EPA's discretion when remaining uncertainties as to the significance of observed health effects, welfare effects, and/or emissions exposures from a fuel or fuel/additive mixture interfere with EPA's ability to make reasonable estimates of the potential risks posed by emissions from the fuel or additive products. Tier 3 testing may be conducted either on an individual basis or a group basis. If performed on a group basis, EPA may require either the same representative to be used in Tier 3 testing as was used in Tier 2 testing or may select a different member or members of the group to represent the group in the Tier 3 tests.

(2) In addition to the criteria specific to particular tests as summarized and detailed in the testing guidelines (§§ 79.62 through 79.68), EPA may consider a number of factors (including, but not limited to):

(i) The number of positive and negative outcomes related to each endpoint;

(ii) The identification of concentration-effect relationships;

(iii) The statistical sensitivity and significance of such studies;

(iv) The severity of the observed effects (e.g., whether the effects would be likely to lead to incapacitating or irreversible conditions);

(v) The type and number of species included in the reported tests;

(vi) The consistency and clarity of apparent mechanisms, target organs, and outcomes;

(vii) The presence or absence of effective health test control data for base-fuel-only versus additive/base fuel mixture comparisons;

(viii) The nature and amount of known toxic agents in the emissions stream; and

(ix) The observation of lesions which specifically implicate inhalation as an important exposure route.

(3) *Consideration of exposure.* EPA retains discretion to consider, in addition to available toxicity data, any Tier 1

data on potential exposures to emissions from a particular fuel or fuel additive (or group of fuels and/or fuel additives) in determining whether to require Tier 3 testing. EPA may consider, but is not limited to, the following factors:

(i) Types and emission rates of speciated emission components;

(ii) Types and emission rates of combinations of compounds or elements of concern;

(iii) Historical and/or projected production volumes and market distributions; and

(iv) Estimated population and/or environmental exposures obtained through extrapolation, modeling, or literature search findings on ambient, occupational, or epidemiological exposures.

(b) *Notice.* (1) EPA will determine whether Tier 3 testing is necessary upon receipt of a manufacturer's (or group's) submittal as prescribed under § 79.51(d). If EPA determines on the basis of the Tier 1 and 2 data submission and any other available information that further testing is necessary, EPA will require the responsible manufacturer(s) to conduct testing as described elsewhere in this section. EPA will notify the manufacturer (or group) by certified letter of the purpose and nature of any proposed testing and of the proposed deadline for completing the testing. A copy of the letter will be placed in the public record. EPA will provide the manufacturer a 60-day comment period after the manufacturer's receipt of such notice. EPA may extend the comment period if it appears from the nature of the issues raised that further discussion is warranted. In the event that no comment is received by EPA from the manufacturer (or group) within the comment period, the manufacturer (or group) shall be deemed to have consented to the adoption by EPA of the proposed Tier 3 requirements.

(2) EPA will issue a notice in the FEDERAL REGISTER of its intent to require testing under Tier 3 for a particular fuel or additive manufacturer and that a copy of the letter to the manufacturer outlining the Tier 3 testing for that manufacturer is available in the public record for review and comment. The public shall have a minimum of thirty (30) days after the publication of this notice to comment on the proposed Tier 3 testing.

(3) EPA will include in the public record a copy of any timely comments concerning the proposed Tier 3 testing requirements received from the affected manufacturer or group or from the public, and the responses of EPA to such comments. After reviewing all such comments received, EPA will adopt final Tier 3 requirements by sending a certified letter describing such final requirements to the manufacturer or group. EPA will also issue a notice in the FEDERAL REGISTER announcing that it has adopted such final Tier 3 requirements and that a copy of the letter adopting the requirements has been included in the public record.

(4) Prior to beginning any required Tier 3 testing, the manufacturer shall submit detailed test protocols to EPA for approval. Once EPA has determined the Tier 3 testing requirements and approves the test protocols, any modification to the requirements shall be governed by § 79.51(f).

(c) *Carcinogenicity and Mutagenicity Testing.* (1) A potential need for Tier 3 carcinogenicity and/or mutagenicity testing may be indicated if the results of the *In vivo* Micronucleus Assay, required under § 79.64, the *In vivo* Sister Chromatid Exchange Assay, required under § 79.65, the Salmonella mutagenicity assay required under § 79.68, or relevant pathologic findings under § 79.62 demonstrate a statistically significant dose-related positive response as compared with appropriate controls. Alternatively, Tier 3 carcinogenicity testing and/or mutagenicity testing may be required if there are positive outcomes for at least one concentration in two or more of the tests required under §§ 79.64, 79.65, and 79.68.

(2) The testing for carcinogenicity required under this paragraph may, at EPA's discretion, be conducted in accordance with 40 CFR 798.3300 or 798.3320, or their equivalents (see suggested references following each health effects testing guideline). The testing for mutagenicity required under this paragraph may likewise be conducted in accordance with 40 CFR 798.5195, 798.5500, 798.5955, 798.7100, and/or other

suitable equivalent testing (see suggested references following each health effects testing guideline). EPA may supplement or modify guidelines as required to ensure that the prescribed testing addresses the identified areas of concern.

(d) *Reproductive and Teratological Effects Testing.* (1) A potential need for Tier 3 testing may be indicated if the results of the Fertility Assessment/Teratology study required under § 79.63 or relevant findings under § 79.62 demonstrate, in comparison with appropriate controls, a statistically significant dose-related positive response in one or more of the possible test outcomes. Similarly, Tier 3 testing may be indicated if statistically significant positive results are confined to either sex, or to the fetus as opposed to the pregnant adult.

(2) The testing for reproductive and teratological effects required under this paragraph may, at EPA's discretion, be conducted in accordance with 40 CFR 798.4700 and/or by performance of a reproductive assay by continuous breeding. These guidelines may be modified or supplemented by EPA as required to ensure that the prescribed testing addresses the identified areas of concern.

(e) *Neurotoxicity Testing.* (1) A potential need for Tier 3 neurotoxicity testing may be indicated if either the results of the Neuropathology Assessment required under § 79.67 shows concentration-related effects in exposed animals or the Glial Fibrillary Acidic Protein Assay required under § 79.66 demonstrates a statistically significant concentration-related positive response as compared with appropriate controls. Similarly, Tier 3 neurotoxicity testing may be indicated if relevant results under § 79.62 demonstrate a statistically significant positive response in comparison to appropriate controls.

(2) The testing for neurotoxicity required under this paragraph may, at EPA's discretion, be conducted in accordance with 40 CFR 798.3260 and 40 CFR part 798 subpart G. These guidelines may be modified or supplemented by EPA as required to ensure that the prescribed testing addresses the identified areas of concern.

(f) *General and Pulmonary Toxicity Testing.* (1) A potential need for Tier 3 general and/or pulmonary toxicity testing may be indicated if, in comparison with appropriate controls, the results of the Subchronic Toxicity Study, pursuant to § 79.62, demonstrate abnormal gross analysis or histopathological findings (especially as relates to lung pathology from whole-body preserved test animals) or persistence or delayed occurrence of toxic effects beyond the exposure period.

(2) A potential need for Tier 3 testing with respect to other organ systems or endpoints not addressed by specific Tier 2 tests, e.g., hepatic, renal, or endocrine toxicity, may be demonstrated by findings in the Tier 2 Subchronic Toxicity Study (pursuant to § 79.62) or by findings in the Tier 1 literature search of adverse functional, physiologic, metabolic, or histopathologic effects of fuel or additive emissions to such other organ systems or any other information available to EPA. In addition, findings in the Tier 1 emission characterization of significant levels of a known toxicant to such other organ systems and endpoints may also indicate a need for relevant health effects testing. The testing required under this paragraph may include tests conducted in accordance with 40 CFR 798.3260 or 798.3320. These guidelines may be modified or supplemented by EPA as necessary to ensure that the prescribed testing addresses the identified areas of concern.

(3) The testing for general/pulmonary toxicity required under this paragraph may, at EPA's discretion, be conducted in accordance with 40 CFR 798.2450 or 798.3260. These guidelines may be modified or supplemented by EPA as necessary to ensure that the prescribed testing addresses the identified areas of concern. Pulmonary function measurements, host defense assays, immunotoxicity tests, cell morphology/morphometry, and/or enzyme assays of lung lavage cells and fluids may be specifically required.

(g) *Other Tier 3 Testing.* (1) A manufacturer or group may be required to use up-to-date modeling, sampling, monitoring, and/or analytic approaches at the Tier 3 level to provide:

(i) Estimates of exposures to the emission products of a fuel or fuel additive or group of products;

(ii) The expected atmospheric transformation products of such emissions; and

(iii) The environmental partitioning of such emissions to the air, soil, water, and biota.

(2) Additional emission characterization may be required if uncertainty over the identity of chemical species or rate of their emission interferes with reasonable judgments as to the presence and/or concentration of potentially toxic substances in the emissions of a fuel or fuel additive. The required tests may include characterization of additional classes of emissions, the characterization of emissions generated by additional vehicles/engines of various technology mixes (e.g., catalyzed versus non-catalyzed emissions), and/or other more precise analytic procedures for identification or quantification of emissions compounds. Additional emissions testing may also be required to evaluate concerns which may arise regarding the potential effects of a fuel or fuel additive on the performance of emission control equipment.

(3) A manufacturer or group may be required to conduct biological and/or exposure studies at the Tier 3 level to evaluate directly the potential public welfare or environmental effects of the emissions of a fuel or additive, if significant concerns about such effects arise as a result of EPA's review of the literature search or emission characterization findings in Tier 1 or the results of the toxicological tests in Tier 2.

(4) With regard to group submittals, Tier 3 studies on a fuel or additive product(s) other than the originally specified group representative may be required if specific differences in the product's composition indicate that its emissions may have different toxicologic properties from those of the original group representative.

(5) Additional emission characterization and/or toxicologic tests may be required to evaluate the impact of different vehicle, engine, or emission control technologies on the observed composition or health or welfare effects of the emissions of a fuel or additive.

(6) Toxicological tests on individual emission products may be required.

(7) Upon review of information submitted for an aerosol product under § 79.58(e), emissions characterization, exposure, and/or toxicologic testing at a Tier 3 level may be required.

(8) A manufacturer which qualifies for and has elected to use the special provisions for the products of small businesses (pursuant to § 79.58(d)) may be required to conduct emission characterization, exposure, and/or toxicologic studies at the Tier 3 level for such products, as specified in § 79.58(d)(4).

(9) The examples of potential Tier 3 tests described in this section do not in any way limit EPA's broad discretion and authority under Tier 3.

§ 79.55 Base fuel specifications.

(a) *General Characteristics.* (1) The base fuel(s) in each fuel family shall serve as the group representative(s) for the baseline group(s) in each fuel family pursuant to § 79.56. Also, as specified in § 79.51(h)(1), for fuel additives undergoing testing, the designated base fuel for the respective fuel family shall serve as the substrate in which the additive shall be mixed prior to the generation of emissions.

(2) Base fuels shall contain a limited complement of the additives which are essential for the fuel's production or distribution and/or for the successful operation of the test vehicle/engine throughout the mileage accumulation and emission generation periods. Such additives shall be used at the minimum effective concentration-in-use for the base fuel in question.

(3) Unless otherwise restricted, the presence of trace contaminants does not preclude the use of a fuel or fuel additive as a component of a base fuel formulation.

(4) When an additive is the test subject, any additive normally contained in the base fuel which serves the same function as the subject additive shall be removed from the base fuel formulation. For example, if a corrosion inhibitor were the subject of testing and if this additive were to be tested in a base

fuel which normally contained a corrosion inhibitor, this test additive would replace the corrosion inhibitor normally included as a component of the base fuel.

(5) Additive components of the methanol, ethanol, methane, and propane base fuels in addition to any such additives included below shall be limited to those recommended by the manufacturers of the vehicles and/or engines used in testing such fuels. For this purpose, EPA will review requests from manufacturers (or their agents) to modify the additive specifications for the alternative fuels and, if necessary, EPA shall change these specifications based on consistency of those changes with the associated vehicle manufacturer's recommendations for the operation of the vehicle. EPA shall publish notice of any such changes to a base fuel and/or its base additive package specifications in the FEDERAL REGISTER.

(b) *Gasoline Base Fuel.* (1) The gasoline base fuel is patterned after the reformulated gasoline summer baseline fuel as specified in CAA section 211(k)(10)(B)(i). The specifications and blending tolerances for the gasoline base fuel are listed in table F94–1. The additive types which shall be required and/or permissible in the gasoline base fuel are listed in table 1 as well.

TABLE F94–1—GASOLINE BASE FUEL PROPERTIES

API Gravity	57.4±0.3
Sulfur, ppm	339±25
Benzene, vol%	1.53±0.3
RVP, psi	8.7±0.3
Octane, (R+M)/2	87.3±0.5
Distillation Parameters:	
10%, °F	128±5
50%, °F	218±5
90%, °F	330±5
Aromatics, vol%	32.0±2.7
Olefins, vol%	9.2±2.5
Saturates, vol%	58.8±2.0
Additive Types:	
Required	Deposit Control Corrosion Inhibitor Demulsifier Anti-oxidant Metal Deactivator
Permissible	Anti-static

(2) The additive components of the gasoline base fuel shall contain compounds comprised of no elements other than carbon, hydrogen, oxygen, nitrogen, and sulfur. Additives shall be used at the minimum concentration needed to perform effectively in the gasoline base fuel. In no case shall their concentration in the base fuel exceed the maximum concentration recommended by the additive manufacturer. The increment of sulfur contributed to the formulation by any additive shall not exceed 15 parts per million sulfur by weight and shall not cause the gasoline base fuel to exceed the sulfur specifications in table F94–1 of this section.

(c) *Diesel Base Fuel.* (1) The diesel base fuel shall be a #2 diesel fuel having the properties and blending tolerances shown in table F94–2 of this section. The additive types which shall be permissible in diesel base fuel are presented in table F94–2 as well.

TABLE F94–2—DIESEL BASE FUEL PROPERTIES

API Gravity	33±1
Sulfur, wt%	0.05±0.0025
Cetane Number	45.2±2
Cetane Index	45.7±2
Distillation Parameters:	
10%, °F	433±5
50%, °F	516±5
90%, °F	606±5
Aromatics, vol%	38.4±2.7
Olefins, vol%	1.5±0.4
Saturates, vol%	60.1±2.0
Additive Types:	
Required	Corrosion Inhibitor Demulsifier Anti-oxidant Metal Deactivator
Permitted	Anti-static Flow Improver
Not Permitted	Deposit Control

(2) The additive components of the diesel base fuel shall contain compounds comprised of no elements other than carbon, hydrogen, oxygen, nitrogen, and sulfur. Additives shall be used at the minimum concentration needed to perform effectively in the diesel base fuel. In no case shall their concentration in the base fuel exceed the maximum concentration recommended by the additive manufacturer. The increment of sulfur contributed to the base fuel by additives shall not cause the diesel base fuel to exceed the sulfur specifications in table F94–2 of this section.

(d) *Methanol Base Fuels.* (1) The methanol base fuels shall contain no elements other than carbon, hydrogen, oxygen, nitrogen, sulfur, and chlorine.

(2) The M100 base fuel shall consist of 100 percent by volume chemical grade methanol.

(3) The M85 base fuel is to contain 85 percent by volume chemical grade methanol, blended with 15 percent by volume gasoline base fuel meeting the gasoline base fuel specifications outlined in paragraph (b)(1) of this section. Manufacturers shall ensure the methanol compatibility of lubricating oils as well as fuel additives used in the gasoline portion of the M85 base fuel.

(4) The methanol base fuels shall meet the specifications listed in table F94–3.

TABLE F94–3—METHANOL BASE FUEL PROPERTIES

M100:	
Chemical Grade MeOH, vol%	100
Chlorine (as chlorides), wt%, max	0.0001
Water, wt%, max	0.5
Sulfur, wt%, max	0.002
M85	
Chemical Grade MeOH, vol%,	85
Gasoline Base Fuel, vol%	15
Chlorine (as chlorides), wt%, max	0.0001
Water, wt%, max	0.5
Sulfur, wt%, max	0.004

(e) *Ethanol Base Fuel.* (1) The ethanol base fuel, E85, shall contain no elements other than carbon, hydrogen, oxygen, nitrogen, sulfur, chlorine, and copper.

(2) The ethanol base fuel shall contain 85 percent by volume chemical grade ethanol, blended with 15 percent by volume gasoline base fuel that meets the specifications listed in paragraph (b)(1) of this section. Additives used in the gasoline component of E85 shall be ethanol-compatible.

(3) The ethanol base fuel shall meet the specifications listed in table F94–4.

TABLE F94–4—ETHANOL BASE FUEL PROPERTIES

E85:	
Chemical Grade EtOH, vol%, min	85
Gasoline Base Fuel, vol%	15
Chlorine (as chloride), wt%, max	0.0004
Copper, mg/L, max	0.07
Water, wt%, max	0.5
Sulfur, wt%, max	0.004

(f) *Methane Base Fuel.* (1) The methane base fuel is a gaseous motor vehicle fuel marketed commercially as compressed natural gas (CNG), whose primary constituent is methane.

(2) The methane base fuel shall contain no elements other than carbon, hydrogen, oxygen, nitrogen, and sulfur. The fuel shall contain an odorant additive for leak detection purposes. The added odorant shall be used at a level such that, at ambient conditions, the fuel must have a distinctive odor potent enough for its presence to be detected down to a concentration in air of not over ⅕ (one-fifth) of the lower limit of flammability. After addition of the odorant, the methane base fuel shall contain no more than 16 ppm sulfur by volume.

(3) The methane base fuel shall meet the specifications listed in table F94–5.

TABLE F94–5—METHANE BASE FUEL SPECIFICATIONS

Methane, mole%, min	89.0
Ethane, mole%, max	4.5
Propane and higher HC, mole%, max	2.3
C6 and higher HC, mole%, max	0.2
Oxygen, mole%, max	0.6
Sulfur (including odorant additive) ppmv, max	16
Inert gases:	
Sum of CO_2 and N_2, mole%, max	4.0

(g) *Propane Base Fuel.* (1) The propane base fuel is a gaseous motor vehicle fuel, marketed commercially as liquified petroleum gas (LPG), whose primary constituent is propane.

(2) The propane base fuel may contain no elements other than carbon, hydrogen, oxygen, nitrogen, and sulfur. The fuel shall contain an odorant additive for leak detection purposes. The added odorant shall be used at a level such that at ambient conditions the fuel must have a distinctive odor potent enough for its presence to be detected down to a concentration in air of not over ⅕ (one-fifth) of the lower limit of flammability. After addition of the odorant, the propane base fuel shall contain no more than 120 ppm sulfur by weight.

(3) The propane base fuel shall meet the specifications listed in table F94–6.

TABLE F94–6—PROPANE BASE FUEL SPECIFICATIONS

Vapor pressure at 100–F, psig, max	208
Evaporative temperature, 95%, °F, max	−37
Propane, vol%, min	92.5
Propylene, vol%, max	5.0
Butane and heavier, vol%, max	2.5
Residue-evaporation of 100mL, max, mL	0.05
Sulfur (including odorant additive) ppmw, max	123

§ 79.56 Fuel and fuel additive grouping system.

(a) Manufacturers of fuels and fuel additives are allowed to satisfy the testing requirements in §§ 79.52, 79.53, and 79.54 and the associated reporting requirements in § 79.59 on an individual or group basis, provided that such products meet the criteria in this section for enrollment in the same fuel/additive group. However, each manufacturer of a fuel or fuel additive must individually comply with the notification requirements of § 79.59(b). Further, if a manufacturer elects to comply by participation in a group, each manufacturer continues to be individually subject to the information requirements of this subpart.

(1) The use of the grouping provision to comply with Tier 1 and Tier 2 testing requirements is voluntary. No manufacturer is prohibited from testing and submitting its own data for its own product registration, despite its qualification for membership in a particular group.

(2) The only groups permitted are those established in this section.

(b) Each manufacturer who chooses to enroll a fuel or fuel additive in a group of similar fuels and fuel additives as designated in this section may satisfy the registration requirements through a group submission of jointly-sponsored testing and analysis conducted on a product which is representative of all products in that group, provided that the group representative is chosen according to the specifications in this section.

(1) The health effects information submitted by a group shall be considered applicable to all fuels and fuel additives in the group. A fuel or fuel additive manufacturer who has chosen to participate in a group may subsequently choose to perform testing of such fuel or fuel additive on an individual basis; however, until such independent registration information has been received and reviewed by EPA, the information initially submitted by the group on behalf of the manufacturer's fuel or fuel additive shall be considered applicable and valid for that fuel or fuel additive. It could therefore be used to support requirements for further testing under the provisions of Tier 3 or to support regulatory decisions affecting that fuel or fuel additive.

(2) Manufacturers are responsible for determining the appropriate groups for their products according to the criteria in this section and for enrolling their products into those groups under industry-sponsored or other independent brokering arrangements.

(3) Manufacturers who enroll a fuel or fuel additive into a group shall share the applicable costs according to appropriate arrangements established by the group. The organization and administration of group functions and the development of cost-sharing arrangements are the responsibility of the participating manufacturers. If manufacturers are unable to agree on fair and equitable cost sharing arrangements and if such dispute is referred by one or more manufacturers to EPA for resolution, then the provisions in § 79.56(c) (1) and (2) shall apply.

(c) In complying with the registration requirements for a given fuel or fuel additive, notwithstanding the enrollment of such fuel or additive in a group, a manufacturer may make use of available information for any product which conforms to the same grouping criteria as the given product. If, for this purpose, a manufacturer wishes to rely upon the information previously submitted by another manufacturer (or group of manufacturers) for registration of a similar product (or group of products), then the previous submitter is entitled to reimbursement by the manufacturer for an appropriate portion of the applicable costs incurred to obtain and report such information. Such entitlement shall remain in effect for a period of fifteen years following the date on which the original information was submitted. Pursuant to § 79.59(b)(4)(ii), the manufacturer who relies on previously-submitted registration data shall certify to EPA that the original submitter has been notified and that appropriate reimbursement arrangements have been made.

(1) When private efforts have failed to resolve a dispute about a fair amount or method of cost-sharing or reimbursement for testing costs incurred under this subpart, then any

party involved in that dispute may initiate a hearing by filing two signed copies of a request for a hearing with a regional office of the American Arbitration Association and mailing a copy of the request to EPA. A copy must also be sent to each person from whom the filing party seeks reimbursement or who seeks reimbursement from that party. The information and fees to be included in the request for hearing are specified in 40 CFR 791.20(b) and (c).

(2) Additional procedures and requirements governing the hearing process are those specified in 40 CFR 791.22 through 791.50, 791.60, 791.85, and 791.105, excluding 40 CFR 791.39(a)(3) and 791.48(d).

(d) *Basis for Classification*. (1) Rather than segregating fuels and fuel additives into separate groups, the grouping system applies the same grouping criteria and creates a single set of groups applicable both to fuels and fuel additives.

(2) Fuels shall be classified pursuant to § 79.56(e) into categories and groups of similar fuels and fuel additives according to the components and characteristics of such fuels in their uncombusted state. The classification of a fuel product must take into account the components of all bulk fuel additives which are listed in the registration application or basic registration data submitted for the fuel product.

(3) Fuel additives shall be classified pursuant to § 79.56(e) into categories and groups of similar fuels and fuel additives according to the components and characteristics of the respective uncombusted additive/base fuel mixture pursuant to § 79.51(h)(1).

(4) In determining the category and group to which a fuel or fuel additive belongs, impurities present in trace amounts shall be ignored unless otherwise noted. Impurities are those substances which are present through contamination or which remain in the fuel or additive naturally after processing is completed.

(5) *Reference Standards*. (i) American Society for Testing and Materials (ASTM) standard D 4814–93a, ''Standard Specification for Automotive Spark-Ignition Engine Fuel'', used to define the general characteristics of gasoline fuels (paragraph (e)(3)(i)(A)(3) of this section) and ASTM standard D 975–93, ''Standard Specification for Diesel Fuel Oils'', used to define the general characteristics of diesel fuels (paragraph (e)(3)(ii)(A)(3) of this section) have been incorporated by reference.

(ii) This incorporation by reference was approved by the Director of the Federal Register in accordance with 5 U.S.C. 552(a) and 1 CFR part 51. Copies may be obtained from the American Society for Testing and Materials (ASTM), 1916 Race Street, Philadelphia, PA 19103. Copies may be inspected at U.S. EPA, OAR, 401 M Street SW., Washington, DC 20460 or at the National Archives and Records Administration (NARA). For information on the availability of this material at NARA, call 202–741–6030, or go to: *http://www.archives.gov/federal_register/code_of_federal_regulations/ibr_locations.html*.

(e) *Grouping Criteria*. The grouping system is represented by a matrix of three fuel/additive categories within six specified fuel families (see table F94–7, Grouping System for Fuels and Fuel Additives). Each category may include one or more groups. Within each group, a representative may be designated based on the criteria in this section and joint registration information may be developed and submitted for member fuels and fuel additives.

TABLE F94–7—GROUPING SYSTEM FOR FUELS AND FUEL ADDITIVES

Category	Conventional Fuel Families		Alternative Fuel Families			
	Gasoline (A)	Diesel (B)	Methanol (C)	Ethanol (D)	Methane (CNG, LNG) (E)	Propane (LPG) (F)
Baseline ..	One group represented by gasoline base fuel.	One group represented by diesel base fuel.	Two groups: (1) M100 group (includes methanol-gasoline formulations with at least 96% methanol) represented by M100 base fuel (2) M85 (includes methanol-gasoline formulations with 50–95% methanol) represented by M85 base fuel.	One group (includes ethanol-gasoline formulations with at least 50% ethanol) represented by E85 base fuel.	One group (includes both CNG and LNG), represented by CNG base fuel.	One group represented by LPG base fuel.
Non-baseline.	One group for each gasoline-oxygenate blend or each gasoline-methanol/co-solvent blend; one group for each synthetic crude-derived fuel.	One group for each oxygen-contributing compound or class of compounds; one group for each synthetic crude-derived fuel.	One group for each individual non-methanol, non-gasoline component and one group for each unique combination of such components.	One group for each individual non-ethanol, non-gasoline component and one group for each unique combination of such components.	One group to include methane formulations exceeding the specified limit for non-methane hydrocarbons.	One group to include propane formulations exceeding the specified limit for butane and higher hydrocarbons.
Atypical ...	One group for each atypical element/characteristic, or unique combination of atypical elements/characteristics.	One group for each atypical element/characteristic, or unique combination of atypical elements/characteristics.	One group for each atypical element/characteristic, or unique combination of atypical elements/characteristics.	One group for each atypical element/characteristic, or unique combination of atypical elements/characteristics.	One group for each atypical element/characteristic, or unique combination of atypical elements/characteristics.	One group for each atypical element/characteristic, or unique combination of atypical elements/characteristics.

(1) *Fuel Families*. Each of the following six fuel families (Table F94–7, columns A-F) includes fuels of the type referenced in the name of the family as well as bulk and aftermarket additives which are intended for use in those fuels. When applied to fuel additives, the criteria in these descriptions refer to the associated additive/base fuel mixture, pursuant to § 79.51(h)(1). One or more base fuel formulations are specified for each fuel family pursuant to § 79.55.

(i) The Gasoline Family includes fuels composed of more than 50 percent gasoline by volume and their associated fuel additives. The base fuel for this family is specified in § 79.55(b).

(ii) The Diesel Family includes fuels composed of more than 50 percent diesel fuel by volume and their associated fuel additives. The Diesel fuel family includes both Diesel #1 and Diesel #2 formulations. The base fuel for this family is specified in § 79.55(c).

(iii) The Methanol Family includes fuels composed of at least 50 percent methanol by volume and their associated fuel additives. The M100 and M85 base fuels are specified in § 79.55(d).

(iv) The Ethanol Family includes fuels composed of at least 50 percent ethanol by volume and their associated fuel additives. The base fuel for this family is E85 as specified in § 79.55(e).

(v) The Methane Family includes compressed natural gas (CNG) and liquefied natural gas (LNG) fuels containing at least 50 mole percent methane and their associated fuel additives. The base fuel for the family is a CNG formulation specified in § 79.55(f).

(vi) The Propane Family includes propane fuels containing at least 50 percent propane by volume and their associated fuel additives. The base fuel for this family is a liquefied petroleum gas (LPG) as specified in § 79.55(g).

(vii) A manufacturer seeking registration for formulation(s) which do not fit the criteria for inclusion in any of the fuel families described in this section shall contact EPA at the address in § 79.59(a)(1) for further guidance in classifying and testing such formulation(s).

(2) *Fuel/Additive Categories.* Fuel/additive categories (Table F94–7, rows 1–3) are subdivisions of fuel families which represent the degree to which fuels and fuel additives in the family resemble the base fuel(s) designated for the family. Three general category types are defined in this section. When applied to fuel additives, the criteria in these descriptions refer to the associated additive/base fuel mixture, pursuant to § 79.51(h)(1).

(i) Baseline categories consist of fuels and fuel additives which contain no elements other than those permitted in the base fuel for the respective fuel family and conform to specified limitations on the amounts of certain components or characteristics applicable to that fuel family.

(ii) Non-Baseline Categories consist of fuels and fuel additives which contain no elements other than those permitted in the base fuel for the respective fuel family, but which exceed one or more of the limitations for certain specified components or characteristics applicable to baseline formulations in that fuel family.

(iii) Atypical Categories consist of fuels and fuel additives which contain elements or classes of compounds other than those permitted in the base fuel for the respective fuel family or which otherwise do not meet the criteria for either baseline or non-baseline formulations in that fuel family. A fuel or fuel additive product having both non-baseline and atypical characteristics pursuant to § 79.56(e)(3), shall be considered to be an atypical product.

(3) This section defines the specific categories applicable to each fuel family. When applied to fuel additives, the criteria in these descriptions refer to the associated additive/base fuel mixture, pursuant to § 79.51(h)(1).

(i) *Gasoline Categories.* (A) The Baseline Gasoline category contains gasoline fuels and associated additives which satisfy all of the following criteria:

(*1*) Contain no elements other than carbon, hydrogen, oxygen, nitrogen, and/or sulfur.

(*2*) Contain less than 1.5 percent oxygen by weight.

(*3*) Sulfur concentration is limited to 1000 ppm per the specifications cited in the following paragraph.

(*4*) Possess the physical and chemical characteristics of unleaded gasoline as specified by ASTM standard D 4814–93a (incorporated by reference, pursuant to paragraph (d)(5) of this section), in at least one Seasonal and Geographical Volatility Class.

(*5*) Derived only from conventional petroleum, heavy oil deposits, coal, tar sands, and/or oil sands.

(B) The Non-Baseline Gasoline category is comprised of gasoline fuels and associated additives which conform to the specifications in paragraph (e)(3)(i)(A) of this section for the Baseline Gasoline category except that they contain 1.5 percent or more oxygen by weight and/or may be derived from sources other than those listed in paragraph (e)(3)(i)(A)(*5*) of this section.

(C) The Atypical Gasoline category is comprised of gasoline fuels and associated additives which contain one or more elements other than carbon, hydrogen, oxygen, nitrogen, and sulfur.

(ii) *Diesel Categories.* (A) The Baseline Diesel category is comprised of diesel fuels and associated additives which satisfy all of the following criteria:

(*1*) Contain no elements other than carbon, hydrogen, oxygen, nitrogen, and/or sulfur. Pursuant to 40 CFR 80.29, highway diesel sold after October 1, 1993 shall contain 0.05 percent or less sulfur by weight;

(*2*) Contain less than 1.0 percent oxygen by weight;

(*3*) Diesel formulations containing more than 0.05 percent sulfur by weight are precluded by 40 CFR 80.29;

(*4*) Possess the characteristics of diesel fuel as specified by ASTM standard D 975–93 (incorporated by reference,

pursuant to paragraph (d)(5) of this section); and

(*5*) Derived only from conventional petroleum, heavy oil deposits, coal, tar sands, and/or oil sands.

(B) The Non-Baseline Diesel category is comprised of diesel fuels and associated additives which conform to the specifications in paragraph (e)(3)(ii)(A) of this section for the Baseline Diesel category except that they contain 1.0 percent or more oxygen by weight and/or may be derived from sources other than those listed in paragraph (e)(3)(ii)(A)(*5*) of this section.

(C) The Atypical Diesel category is comprised of diesel fuels and associated additives which contain one or more elements other than carbon, hydrogen, oxygen, nitrogen, and sulfur.

(iii) *Methanol Categories.* (A) The Baseline Methanol category is comprised of methanol fuels and associated additives which contain at least 50 percent methanol by volume, no more than 4.0 percent by volume of substances other than methanol and gasoline, and no elements other than carbon, hydrogen, oxygen, nitrogen, sulfur, and/or chlorine. Baseline methanol shall contain no more than 0.004 percent by weight of sulfur or 0.0001 percent by weight of chlorine.

(B) The Non-Baseline Methanol category is comprised of fuel blends which contain at least 50 percent methanol by volume, more than 4.0 percent by volume of a substance(s) other than methanol and gasoline, and meet the baseline limitations on elemental composition in paragraph (e)(3)(iii)(A) of this section.

(C) The Atypical Methanol category consists of methanol fuels and associated additives which do not meet the criteria for either the Baseline or the Non-Baseline Methanol category.

(iv) *Ethanol Categories.* (A) The Baseline Ethanol category is comprised of ethanol fuels and associated additives which contain at least 50 percent ethanol by volume, no more than five (5) percent by volume of substances other than ethanol and gasoline, and no elements other than carbon, hydrogen, oxygen, nitrogen, sulfur, chlorine, and copper. Baseline ethanol formulations shall contain no more than 0.004 percent by weight of sulfur, 0.0004 percent by weight of chlorine, and/or 0.07 mg/L of copper.

(B) The Non-Baseline Ethanol category is comprised of fuel blends which contain at least 50 percent ethanol by volume, more than five (5) percent by volume of a substance(s) other than ethanol and gasoline, and meet the baseline limitations on elemental composition in paragraph (e)(3)(iv)(A) of this section.

(C) The Atypical Ethanol category consists of ethanol fuels and associated additives which do not meet the criteria for either the Baseline or the Non-Baseline Ethanol categories.

(v) *Methane Categories.* (A) The Baseline Methane category is comprised of methane fuels and associated additives (including at least an odorant additive) which contain no elements other than carbon, hydrogen, oxygen, nitrogen, and/or sulfur, and contain no more than 20 mole percent non-methane hydrocarbons. Baseline methane formulations shall not contain more than 16 ppm by volume of sulfur, including any sulfur which may be contributed by the odorant additive.

(B) The Non-Baseline Methane category consists of methane fuels and associated additives which conform to the specifications in paragraph (e)(3)(v)(A) of this section for the Baseline Methane category except that they exceed 20 mole percent non-methane hydrocarbons.

(C) The Atypical Methane category consists of methane fuels and associated additives which contain one or more elements other than carbon, hydrogen, oxygen, nitrogen, and/or sulfur, or exceed 16 ppm by volume of sulfur.

(vi) *Propane categories.* (A) The Baseline Propane category is comprised of propane fuels and associated additives (including at least an odorant additive) which contain no elements other than carbon, hydrogen, oxygen, nitrogen, and/or sulfur, and contain no more than 20 percent by volume non-propane hydrocarbons. Baseline Propane formulations shall not contain more than 123 ppm by weight of sulfur, including any sulfur which may be contributed by the odorant additive.

(B) The Non-Baseline Propane category consists of propane fuels and associated additives which conform to

the specifications in paragraph (e)(3)(vi)(A) of this section for the Baseline Propane category, except that they exceed the 20 percent by volume limit for butane and higher hydrocarbons.

(C) The Atypical Propane category consists of propane fuels and associated additives which contain elements other than carbon, hydrogen, oxygen, nitrogen, and/or sulfur, or exceed 123 ppm by weight of sulfur.

(4) *Fuel/Additive groups.* Fuel/additive groups are subdivisions of the fuel/additive categories. One or more group(s) are defined within each category in each fuel family according to the presence of differing characteristics in the fuel or additive/base fuel mixture. For each group, one formulation (either a base fuel or a member fuel or additive product) is chosen to represent all the member products in the group in any tests required under this subpart. The section which follows describes the fuel/additive groups.

(i) *Baseline groups.* (A) The Baseline Gasoline category comprises a single group. The gasoline base fuel specified in § 79.55(b) shall serve as the representative of this group.

(B) The Baseline Diesel category comprises a single group. The diesel base fuel specified in § 79.55(c) shall serve as the representative of this group.

(C) The Baseline Methanol category includes two groups: M100 and M85. The M100 group consists of methanol-gasoline formulations containing at least 96 percent methanol by volume. These formulations must contain odorants and bitterants (limited in elemental composition to carbon, hydrogen, oxygen, nitrogen, sulfur, and chlorine) for prevention of purposeful or inadvertent consumption. The M100 base fuel specified in § 79.55(d) shall serve as the representative for this group. The M85 group consists of methanol-gasoline formulations containing at least 50 percent by volume but less than 96 percent by volume methanol. The M85 base fuel specified in § 79.55(d) shall serve as the representative of this group.

(D) The Baseline Ethanol category comprises a single group. The E85 base fuel specified in § 79.55(e) shall serve as the representative of this group.

(E) The Baseline Methane category comprises a single group. The CNG base fuel specified in § 79.55(f) shall serve as the representative of this group.

(F) The Baseline Propane category comprises a single group. The LPG base fuel specified in § 79.55(g) shall serve as the representative of this group.

(ii) *Non-Baseline groups*—(A) *Non-Baseline Gasoline.* The Non-Baseline gasoline fuels and associated additives shall sort into groups according to the following criteria:

(*1*) For gasoline fuel and additive products which contain 1.5 percent oxygen by weight or more, a separate non-baseline gasoline group shall be defined by each oxygenate compound or methanol/co-solvent blend listed as a component in the registration application or basic registration data of any such fuel or additive.

(*i*) Examples of oxygenates occurring in non-baseline gasoline formulations include ethanol, methyl tertiary butyl ether (MTBE), ethyl tertiary butyl ether (ETBE), tertiary amyl methyl ether (TAME), diisopropyl ether (DIPE), dimethyl ether (DME), tertiary amyl ethyl ether (TAEE), and any other compound(s) which increase the oxygen content of the gasoline formulation. A separate non-baseline gasoline group is defined for each such oxygenating compound.

(*ii*) Each unique methanol and co-solvent combination (whether one, two, or more additional oxygenate compounds) used in a non-baseline fuel shall also define a separate group. An oxygenate compound used as a co-solvent for methanol in a non-baseline gasoline formulation must be identified as such in its registration. If the oxygenate is not identified as a methanol co-solvent, then the compound shall be regarded by EPA as defining a separate non-baseline gasoline group. Examples of methanol/co-solvent combinations occurring in non-baseline gasoline formulations include methanol/isopropyl alcohol, methanol/butanol, and methanol with alcohols up to C8/octanol (Octamix).

(*iii*) For each such group, the representative to be used in testing shall

be a formulation consisting of the gasoline base fuel blended with the relevant oxygenate compound (or methanol/co-solvent combination) in an amount equivalent to the highest actual or recommended concentration-in-use of the oxygenate (or methanol/co-solvent combination) recorded in the basic registration data of any member fuel or additive product. In the event that two or more products in the same group contain the same and highest amount of the oxygenate or methanol/co-solvent blend, then the representative shall be chosen at random for such candidate products.

(*2*) An oxygenate compound or methanol/co-solvent combination to be blended with the gasoline base fuel for testing purposes shall be chemical-grade quality, at a minimum, and shall not contain a significant amount of other contaminating oxygenate compounds.

(*3*) Separate non-baseline gasoline groups shall also be defined for gasoline formulations derived from each particular petroleum source not listed in paragraph (e)(3)(i)(A)(*5*) of this section.

(*i*) Such groups may include, but are not limited to, those derived from shale, used oil, waste plastics, and other recycled chemical/petrochemical products.

(*4*) Pursuant to § 79.51(i), non-baseline gasoline products may belong to more than one fuel/additive group.

(B) *Non-Baseline Diesel*. The Non-Baseline diesel fuels and associated additives shall sort into groups according to the following criteria:

(*1*) For diesel fuel and additive products which contain 1.0 percent or more oxygen by weight in the form of alcohol(s) and/or ether(s):

(*i*) A separate non-baseline diesel group shall be defined by each individual alcohol or ether listed as a component in the registration application or basic registration data of any such fuel or additive.

(*ii*) For each such group, the representative to be used in testing shall be a formulation consisting of the diesel base fuel blended with the relevant alcohol or ether in an amount equivalent to the highest actual or recommended concentration-in-use of the alcohol or ether recorded in the basic registration data of any member fuel or additive product.

(*2*) A separate non-baseline diesel group is also defined for each of the following classes of oxygenating compounds: mixed nitroso-compounds; mixed nitro-compounds; mixed alkyl nitrates; mixed alkyl nitrites; peroxides; furans; mixed alkyl esters of plant and/or animal origin (biodiesel). For each such group, the representative to be used in testing shall be formulated as follows:

(*i*) From the class of compounds which defines the group, a particular oxygenate compound shall be chosen from among all such compounds recorded in the registration application or basic registration data of any fuel or additive in the group.

(*ii*) The selected compound shall be the one recorded in any member product's registration application with the highest actual or recommended maximum concentration-in-use.

(*iii*) In the event that two or more oxygenate compounds in the relevant class have the highest recorded concentration-in-use, then the oxygenate compound to be used in the group representative shall be chosen at random from the qualifying candidate compounds.

(*iv*) The compound thus selected shall be the group representative, and shall be used in testing at the following concentration:

(*A*) For biodiesel groups, the representative shall be 100 percent biodiesel fuel.

(*B*) Otherwise, the group representative shall be the selected compound mixed into diesel base fuel at the maximum recommended concentration-in-use.

(*3*) Separate non-baseline diesel groups shall also be defined for diesel formulations derived from each particular petroleum source not listed in paragraph (e)(3)(i)(A)(*5*) of this section.

(*i*) Such groups may include, but are not limited to, those derived from shale, used oil, waste plastics, and other recycled chemical/petrochemical products.

(*ii*) In any such group, the first product to be registered or to apply for

EPA registration shall be the representative of that group. If two or more products are registered or apply for first registration simultaneously, then the representative shall be chosen by a random method from among such candidate products.

(*4*) Pursuant to § 79.51(i), non-baseline diesel products may belong to more than one fuel/additive group.

(C) *Non-Baseline Methanol*. The Non-Baseline methanol formulations are sorted into groups based on the non-methanol, non-gasoline component(s) of the blended fuel. Each such component occurring separately and each unique combination of such components shall define a separate group.

(*1*) The representative of each such non-baseline methanol group shall be the group member with the highest percent by volume of non-methanol, non-gasoline component(s).

(*2*) In case two or more such members have the same and highest concentration of non-methanol, non-gasoline component(s), the representative of the group shall be chosen at random from among such equivalent member products.

(D) *Non-Baseline Ethanol*. The Non-Baseline ethanol formulations are sorted into groups based on the non-ethanol, non-gasoline component(s) of the blended fuel. Each such component occurring separately and each unique combination of such components shall define a separate group.

(*1*) The representative of each such non-baseline ethanol group shall be the group member with the highest percent by volume of non-ethanol, non-gasoline component(s).

(*2*) In case two or more such members have the same and highest concentration of non-ethanol, non-gasoline component(s), the representative of the group shall be chosen at random from among such equivalent member products.

(E) *Non-Baseline Methane*. The Non-Baseline methane category consists of one group. The group representative shall be the member fuel or fuel/additive formulation containing the highest concentration-in-use of non-methane hydrocarbons. If two or more member products have the same and the highest concentration-in-use, then the representative shall be chosen at random from such products.

(F) *Non-Baseline Propane*. The Non-Baseline propane category consists of one group. The group representative shall be the member fuel or fuel/additive formulation containing the highest concentration-in-use of butane and higher hydrocarbons. If two or more products have the same and the highest concentration-in-use, then the representative shall be chosen at random from such products.

(iii) *Atypical groups*. (A) As defined for each individual fuel family in § 79.56(e)(3), fuels and additives meeting any one of the following criteria are considered atypical.

(*1*) Gasoline Atypical fuels and additives contain one or more elements in addition to carbon, hydrogen, oxygen, nitrogen, and sulfur.

(*2*) Diesel Atypical fuels and additives contain one or more element in addition to carbon, hydrogen, oxygen, nitrogen, and sulfur.

(*3*) Methanol Atypical fuels and additives contain:

(*i*) one or more element in addition to carbon, hydrogen, oxygen, nitrogen, sulfur, and chlorine, and/or

(*ii*) sulfur in excess of 0.004 percent by weight, and/or

(*iii*) chlorine in excess of 0.0001 percent by weight.

(*4*) Ethanol Atypical fuels and additives contain:

(*i*) one or more element in addition to carbon, hydrogen, oxygen, nitrogen, sulfur, chlorine, and copper, and/or

(*ii*) sulfur in excess of 0.004 percent by weight, and/or

(*iii*) contain chlorine (as chloride) in excess of 0.0004 percent by weight, and/or

(*iv*) contain copper in excess of 0.07 mg/L.

(*5*) Methane Atypical fuels and additives contain:

(*i*) one or more element in addition to carbon, hydrogen, oxygen, nitrogen, and sulfur, and/or

(*ii*) sulfur in excess of 16 ppm by volume.

(*6*) Propane Atypical fuels and additives contain:

(*i*) one or more element in addition to carbon, hydrogen, oxygen, nitrogen, and sulfur, and/or

(*ii*) sulfur in excess of 123 ppm by weight.

(B) General rules for sorting these atypical fuels and additives into separate groups are as follows:

(*1*) Pursuant to § 79.51(j), a given atypical product may belong to more than one atypical group.

(*2*) Fuels and additives in different fuel families may not be grouped together, even if they contain the same atypical element(s) or other atypical characteristic(s).

(*3*) A fuel or additive containing one or more atypical elements attached to a polymer compound must be sorted into a separate group from atypical fuels or fuel additives containing the same atypical element(s) in non-polymer form. However, the occurrence of a polymer compound which does not contain an atypical element does not affect the grouping of a fuel or additive.

(C) Specific rules for sorting each family's atypical fuels and additives into separate groups, and for choosing each such group's representative for testing, are as follows:

(*1*) A separate group is created for each atypical element (or other atypical characteristic) occurring separately, *i.e.*, in the absence of any other atypical element or characteristic, in one or more fuels and/or additives within a given fuel family.

(*i*) Consistent with the basic grouping guidelines provided in § 79.56(d), a fuel product which is classified as atypical because its basic registration data or application lists a bulk additive containing an atypical characteristic, may be grouped with that additive and/or with other fuels and additives containing the same atypical characteristic.

(*ii*) Within a group of products containing only one atypical element or characteristic, the fuel or additive/base fuel mixture with the highest concentration-in-use or recommended concentration-in-use of the atypical element or characteristic shall be the designated representative of that group. In the event that two or more fuels or additive/base fuel mixtures within the group contain the same and highest concentration of the single atypical element or characteristic, then the group representative shall be selected by a random method from among such candidate products.

(*2*) A separate group is also created for each unique combination of atypical elements (and/or other specified atypical characteristics) occurring together in one or more fuels and/or additives within a given fuel family.

(*i*) Consistent with the basic grouping guidelines provided in § 79.56(d), a fuel which is classified as atypical because its basic registration data lists one bulk additive containing two or more atypical characteristics, may be grouped with that additive and/or with other fuels and/or additives containing the same combination of atypical characteristics. Grouping of fuels containing more than one atypical additive shall be guided by provisions of § 79.51(j).

(*ii*) Within a group of such products containing a unique combination of two or more atypical elements or characteristics, the designated representative shall be the product within the group which contains the highest total concentration of the atypical elements or characteristics.

(*iii*) In the event that two or more products within a given atypical group contain the same and highest concentration of the same atypical elements or characteristics then, among such candidate products, the designated representative shall be the product which, first, has the highest total concentration of metals, followed in order by highest total concentration of halogens, highest total concentration of other atypical elements (including sulfur concentration, as applicable), highest total concentration of polymers containing atypical elements, and, lastly, highest total concentration of oxygen.

(*iv*) If two or more products have the same and highest concentration of the variable identified in the preceding paragraph, then, among such products, the one with the greatest concentration of the next highest variable on the list shall be the group representative.

(*v*) This decision-making process shall continue until a single product is determined to be the representative. If two or more products remain tied at

the end of this process, then the representative shall be chosen by a random method from among such remaining products.

[59 FR 33093, June 27, 1994, as amended at 62 FR 12571, Mar. 17, 1997]

§ 79.57 Emission generation.

This section specifies the equipment and procedures that must be used in generating the emissions which are to be subjected to the characterization procedures and/or the biological tests specified in §§ 79.52(b) and 79.53 of these regulations. When applicable, they may also be required in conjunction with testing under §§ 79.54 and 79.58(c). Additional requirements concerning emission generation, delivery, dilution, quality control, and safety practices are outlined in § 79.61.

(a) *Vehicle and engine selection criteria.* (1) All vehicles and engines used to generate emissions for testing a fuel or additive/fuel mixture must be new (i.e., never before titled) and placed into the program with less than 500 miles on the odometer or 12 hours on the engine chronometer. The vehicles and engines shall be unaltered from the specifications of the original equipment manufacturer.

(2) The vehicle/engine type, vehicle/engine class, and vehicle/engine subclass designated to generate emissions for a given fuel or additive shall be the same type, class, and subclass which, over the previous three years, has consumed the most gallons of fuel in the fuel family applicable to the given fuel or additive. No distinction shall be made between light-duty vehicles and light-duty trucks for purposes of this classification.

(3) Within this vehicle/engine type, class, and subclass, the specific vehicles and engines acceptable for emission generation are those that represent the most common fuel metering system and the most common of the most important emission control system devices or characteristics with respect to emission reduction performance for the model year in which testing begins. These vehicles will be determined through a survey of the previous model year's vehicle/engine sales within the given subclass. These characteristics shall include, but need not be limited to, aftertreatment device(s), fuel aspiration, air injection, exhaust gas recirculation, and feedback type.

(4) Within the applicable subclass, the five highest selling vehicle/engine models that contain the most common such equipment and characteristics shall be determined. Any of these five models of the current model year (at the time testing begins) may be selected for emission generation.

(i) If one or more of the five models is not available for the current model year, the choice of model for emission generation shall be limited to those remaining among the five.

(ii) If fewer than five models of the given vehicle/engine type are available for the current model year, all such models shall be eligible.

(5) When the fuel or fuel additive undergoing testing is not commonly used or intended to be used in the vehicle/engine types prescribed by this selection procedure, or when rebuilding or alteration is required to obtain a suitable vehicle/engine for emission generation, the manufacturer may submit a request to EPA for a modification in test procedure requirements. Any such request must include objective test results which support the claim that a more appropriate vehicle/engine type is needed as well as a suggested substitute vehicle/engine type. The vehicle/engine selection in this case shall be approved by EPA prior to the start of testing.

(6) Once a particular model has been chosen on which to test a fuel or additive product, all mileage accumulation and generation of emissions for characterization and biological testing of such product shall be conducted on that same model.

(i) If the initial test vehicle/engine fails or must be replaced for any reason, emission generation shall continue with a second vehicle/engine which is identical to, or resembles to the greatest extent possible, the initial test vehicle/engine. If more than one replacement vehicle/engine is necessary, all such vehicles/engines shall be identical, or resemble to the greatest extent possible, the initial test vehicle/engine.

(ii) Manufacturers are encouraged to obtain, at the start of a test program,

more than one emission generation vehicle/engine of the identical model, to ensure the availability of back-up emission generator(s). All backup vehicles/engines must be conditioned and must have their emissions fully characterized, as done for the initial test vehicle/engine, prior to their use as emission generators for biological testing. Alternating between such vehicles/engines regularly during the course of testing is permissible and advisable, particularly to allow regular maintenance on such vehicles/engines during prolonged health effects testing.

(b) *Vehicle/engine operation and maintenance.* (1) For the purpose of generating combustion emissions from a fuel or additive/base fuel mixture for which the relevant class is light duty, either a light-duty vehicle shall be operated on a chassis dynamometer or a light-duty engine shall be operated on an engine dynamometer. When the relevant class is heavy duty, the emissions shall be generated on a heavy-duty engine operated on an engine dynamometer. In both cases, the vehicle or engine model shall be selected as described in paragraph (a) of this section and shall have all applicable fuel and emission control systems intact.

(2) Except as provided in § 79.51(h)(2)(iii), the fuel or additive/base fuel mixture being tested shall be used at all times during operation of the test vehicle or engine. No other fuels or additives shall be used in the test vehicle or engine once mileage accumulation has begun until emission generation for emission characterization and biological testing purposes is completed.

(i) A vehicle or engine may be used to generate emissions for the testing of more than one fuel or additive, provided that all such fuels and additives belong to the same fuel family pursuant to § 79.56(e)(i), and that, once a vehicle or engine has been used to generate emissions for an atypical fuel or additive (pursuant to § 79.56(e)(2)(iii)), it shall not be used in the testing of any other fuel or additive. Paragraphs (a) (2) and (3) of this section shall apply only to the first fuel or additive tested.

(ii) Prior to being used to generate emissions for testing an additional fuel or additive, a vehicle or engine which has previously been used for testing a different fuel or additive shall undergo an effective intermediate preconditioning cycle to remove the previously used fuel and its emissions from the vehicle's fuel and exhaust systems and from the combustion emission and evaporative emission control systems, if any.

(iii) Such preconditioning shall include, at a minimum, the following steps:

(A) The canister (if any) shall be removed from the vehicle and purged with 300 °F nitrogen at 20 liters per minute until the incremental weight loss of the canister is less than 1 gram in 30 minutes. This typically takes 3–4 hours and removes 100 to 120 grams of adsorbed gasoline vapors.

(B) The fuel tank shall be drained and filled to capacity with the new test fuel or additive/fuel mixture.

(C) The vehicle or engine shall be operated until at least 95% of the fuel tank capacity is consumed.

(D) The purged canister shall be returned to the vehicle.

(E) The fuel tank shall be drained and filled to 40% capacity with test fuel.

(F) Two-hour fuel tank heat builds from 72–120 °F shall be performed repeatedly as necessary to achieve canister breakthrough. The fuel tank must be drained and filled prior to each heat build.

(3) Scheduled and unscheduled vehicle/engine maintenance. (i) During emission generation, vehicles and engines must be maintained in good condition by following the recommendations of the original equipment manufacturer (OEM) for scheduled service and parts replacement, with repairs performed only as necessary. Modifications, adjustments, and maintenance procedures contrary to procedures found in 40 CFR part 86 for the maintenance of test vehicles/engines or performed solely for the purpose of emissions improvement are not allowed.

(ii) If unscheduled maintenance becomes necessary, the vehicle or engine must be repaired to OEM specifications, using OEM or OEM-approved parts. In addition, the tester is required to measure the basic emissions

pursuant to § 79.52(b)(2)(i) after the unscheduled maintenance and before resuming testing to ensure that the post-maintenance emissions shall be within 20 percent of pre-maintenance emissions levels. If the basic emissions cannot be brought within 20 percent of their previous levels, then the manufacturer shall restart the emissions characterization and health testing of its products combustion emissions using a new vehicle/engine.

(c) *Mileage accumulation.* (1) A vehicle/engine break-in period is required prior to generating emissions for characterization and/or biological testing under this subpart. The required mileage accumulation may be accomplished on a test track, on the street, on a dynamometer, or using any other conventionally accepted method.

(2) Vehicles to be used in the evaluation of baseline and non-baseline fuels and fuel additives shall accumulate 4,000 miles prior to emission testing. Engines to be used in the evaluation of baseline and non-baseline fuels and fuel additives shall accumulate 125 hours of operation on an engine dynamometer prior to emission testing.

(3) When the test formulation is classified as an atypical fuel or fuel additive formulation (pursuant to definitions in § 79.56(e)(4)(iii)), the following additional mileage accumulation requirements apply:

(i) The test vehicle/engine must be operated for a minimum of 4,000 vehicle miles or 125 hours of engine operation.

(ii) Thereafter, at intervals determined by the tester, all emission fractions (*i.e.,* vapor, semi-volatile, and particulate) shall be sampled and analyzed for the presence and amount of the atypical element(s) and/or other atypical constituents. Pursuant to paragraph (d) of this section, the sampled emissions must be generated in the absence of an intact aftertreatment device. Immediately before the samples are taken, a brief warmup period (at least ten miles or the engine equivalent) is required.

(iii) Mileage accumulation shall continue until either 50 percent or more of the mass of each atypical element (or other atypical constituent) entering the engine can be measured in the exhaust emissions (all fractions combined), or the vehicle/engine has accumulated mileage (or hours) equivalent to 40 percent of the average useful life of the applicable vehicle/engine class (pursuant to regulations in 40 CFR part 86). For example, the maximum mileage required for light-duty vehicles is 40 percent of 100,000 miles (*i.e.,* 40,000 miles), while the maximum time of operation for heavy-duty engines is the equivalent of 40 percent of 290,000 miles (*i.e.,* the equivalent in engine hours of 116,000 miles).

(iv) When either condition in paragraph (c)(3)(iii) of this section has been reached, additional emission characterization and biological testing of the emissions may begin.

(d) *Use of exhaust aftertreatment devices.* (1) If the selected test vehicle/engine, as certified by EPA, does not come equipped with an emissions aftertreatment device (such as a catalyst or particulate trap), such device shall not be used in the context of this program.

(2) Except as provided in paragraph (d)(3) of this section for certain specialized additives, the following provisions apply when the test vehicle/engine, as certified by EPA, comes equipped with an emissions aftertreatment device.

(i) For mileage accumulation:

(A) When the test formulation does not contain any atypical elements (pursuant to definitions in § 79.56(e)(4)(iii)), an intact aftertreatment device must be used during mileage accumulation.

(B) When the test formulation does contain atypical elements, then the manufacturer may choose to accumulate the required mileage using a vehicle/engine equipped with either an intact aftertreatment device or with a non-functional aftertreatment device (e.g., a blank catalyst without its catalytic wash coat). In either case, sampling and analysis of emissions for measurement of the mass of the atypical element(s) (as described in § 79.57(c)(3)) must be done on emissions generated with a non-functional (blank) aftertreatment device.

(*1*) If the manufacturer chooses to accumulate mileage without a functional aftertreatment device, and if the manufacturer wishes to do this outside of a laboratory/test track setting, then a

memorandum of exemption for product testing must be obtained by applying to the Director of the Field Operations and Support Division (see § 79.59(a)(1)).

(*2*) [Reserved]

(ii) For Tier 1 (§ 79.52), the total set of requirements for the characterization of combustion emissions (§ 79.52(b)) must be completed two times, once using emissions generated with the aftertreatment device intact and a second time with the aftertreatment device rendered nonfunctional or replaced with a non-functional aftertreatment device as described in paragraph (d)(2)(i)(B) of this section.

(iii) For Tier 2 (§ 79.53), the standard requirements for biological testing of combustion emissions shall be conducted using emissions generated with a non-functioning aftertreatment device as described in paragraph (d)(2)(i)(B) of this section.

(iv) For alternative Tier 2 requirements (§ 79.58(c)) or Tier 3 requirements (§ 79.54) which may be prescribed by EPA, the use of functional or nonfunctional aftertreatment devices shall be specified by EPA as part of the test guidelines.

(v) In the case where an intact aftertreatment device is not in place, all other manufacturer-specified combustion characteristics (e.g., back pressure, residence time, and mixing characteristics) of the altered vehicle/engine shall be retained to the greatest extent possible.

(3) Notwithstanding paragraphs (d)(1) and (d)(2) of this section, when the subject of testing is a fuel additive specifically intended to enhance the effectiveness of exhaust aftertreatment devices, the related aftertreatment device may be used on the emission generation vehicle/engine during all mileage accumulation and testing.

(e) *Generation of combustion emissions*—(1) *Generating combustion emissions for emission characterization.* (i) Combustion emissions shall be generated according to the exhaust emission portion of the Federal Test Procedure (FTP) for the certification of new motor vehicles, found in 40 CFR part 86, subpart B for light-duty vehicles/engines, and subparts D, M and N for heavy-duty vehicles/engines. The Urban Dynamometer Driving Schedule (UDDS), pursuant to 40 CFR part 86, appendix I(a), shall apply to light-duty vehicles/engines and the Engine Dynamometer Driving Schedule (EDS), pursuant to 40 CFR part 86, appendix I(f)(2), shall apply to heavy-duty vehicles/engines. The motoring portion of the heavy-duty test cycle may be eliminated, at the manufacturer's option, for the generation of emissions.

(A) For light-duty engines operated on an engine dynamometer, the tester shall determine the speed-torque equivalencies (''trace'') for its test engine from valid FTP testing performed on a chassis dynamometer, using a test vehicle with an engine identical to that being tested. The test engine must then be operated under these speed and torque specifications to simulate the FTP cycle.

(B) Special procedures not included in the FTP may be necessary in order to characterize emissions from fuels and fuel additives containing atypical elements or to collect some types of emissions (e.g., particulate emissions from light-duty vehicles/engines, semi-volatile emissions from both light-duty and heavy-duty vehicles/engines). Such alterations to the FTP are acceptable.

(C) For Tier 2 testing, the engines shall operate on repeated bags 2 and 3 of the UDDS or back to back repeats of the heavy-duty transient cycle of the EDS.

(ii) Pursuant to § 79.52(b)(1)(i) and § 79.57(d)(2)(ii), emission generation and characterization must be repeated three times when the selected vehicle/engine is normally operated without an emissions aftertreatment device and six times when the selected vehicle/engine is normally operated with an emissions aftertreatment device. In the latter case, the emission generation and characterization process shall be repeated three times with the intact aftertreatment device in place and three times with a non-functioning (blank) aftertreatment device in place.

(iii) From both light-duty and heavy-duty vehicles/engines, samples of vapor phase, semi-volatile phase, and particulate phase emissions shall be collected, except that semi-volatile phase, and particulate emissions need not be sampled for fuels and additives in the

methane and propane families (pursuant to § 79.56(e)(1)(v) and (vi)). The number and type of samples to be collected and separately analyzed during one emission generation/characterization process are as follows:

(A) In the case of combustion emissions generated from light-duty vehicles/engines, the samples consist of three bags of vapor emissions (one from each segment of the light-duty exhaust emission cycle) plus one sample of particulate-phase emissions and one sample of semi-volatile-phase emissions (collected over all segments of the exhaust emission cycle). If the mass of particulate emissions or semi-volatile emissions obtained during one driving cycle is not sufficient for characterization, up to three driving cycles may be performed and the extracted fractions combined prior to chemical analysis. Particulate-phase emissions shall not be combined with semi-volatile-phase emissions. The test laboratory should focus on the characterization of the limit of detection for particulates and semi-volatile emissions.

(B) In the case of combustion emissions generated from heavy-duty engines, the samples consist of one sample of each emission phase (vapor, particulate, and semi-volatile) collected over the entire cold-start cycle and a second sample of each such phase collected over the entire hot-start cycle (see 40 CFR 86.334 through 86.342).

(iv) *Emission collection and storage.* (A) Vapor phase emissions shall be collected and stored in Tedlar bags for subsequent chemical analysis. Storage conditions are specified in § 79.52(b)(2).

(B) Particulate phase emissions shall be collected on a particulate filter (or more than one, if required) using methods described in 40 CFR 86.1301 through 86.1344. These methods, ordinarily applied only to heavy-duty emissions, are to be adapted and used for collection of particulates from light-duty vehicles/engines, as well. The particulate matter may be stored on the filter in a sealed container, or the soluble organic fraction may be extracted and stored in a separate sealed container. Both the particulate and the extract shall be shielded from ultraviolet light and stored at −20 °C or less. Particulate emissions shall be tested no later than six months from the date they were generated.

(C) Semi-volatile emissions shall be collected immediately downstream from the particulate collection filters using porous polymer resin beds, or their equivalent, designed for their capture. The soluble organic fraction of semi-volatile emissions shall be extracted immediately and tested within six months of being generated. The extract shall be stored in a sealed container which is shielded from ultraviolet light and stored at −20 °C or less.

(D) Particulate and semi-volatile phase emission collection, handling and extraction methods shall not alter the composition of the collected material, to the extent possible.

(v) Additional requirements for combustion emission sampling, storage, and characterization are specified in § 79.52(b).

(2) *Generating whole combustion emissions for biological testing.* (i) Biological tests requiring whole combustion emissions shall be conducted using emissions generated from the test vehicle or engine operated in accordance with general FTP requirements.

(ii) Light-duty test vehicles/engines shall be repeatedly operated over the Urban Dynamometer Driving Schedule (UDDS) (or equivalent engine dynamometer trace, per paragraph (e)(1)(i)(A) of this section) and heavy-duty test engines shall be repeatedly operated over the Engine Dynamometer Schedule (EDS) (see 40 CFR part 86, appendix I).

(A) The tolerances of the driving cycle shall be two times those of the Federal Test Procedure and must be met 95 percent of the time.

(B) The UDDS or EDS shall be repeated as many times as required for the biological test session.

(C) Light-duty dynamometers shall be calibrated prior to the start of a biological test (40 CFR 86.118–78), verified weekly (40 CFR 86.118–78), and recalibrated as required. Heavy-duty dynamometers shall be calibrated and checked prior to the start of a biological test (40 CFR 86.1318–84), recalibrated every two weeks (40 CFR 86.1318–84(a)) and checked as stated in 40 CFR 86.1318–84(b) and (c).

(D) The fuel reservoir for the test vehicle/engine shall be large enough to operate the test vehicle/engine throughout the daily biological exposure period, avoiding the need for refueling during testing.

(iii) An apparatus to integrate the large concentration swings typical of transient-cycle exhaust is to be used between the source of emissions and the exposure chamber containing the animal test cages(s). The purpose of such apparatus is to decrease the variability of the biological exposure atmosphere and achieve the necessary concentration of CO or NO_X, whichever is limiting.

(A) A large mixing chamber is suggested for this purpose. The mixing chamber would be charged from the CVS at a constant rate determined by the exposure chamber purge rate. Flow to the exposure chamber would begin at the conclusion of the initial transient cycle with the associated mixing chamber charge.

(B) A potential alternative apparatus is a mini-diluter (see, for example, AIGER/CRADA, February, 1994 in § 79.57(g)).

(C) [Reserved]

(iv) *Emission dilution.* (A) Dilution air can be pre-dried to lower the relative humidity, thus permitting a lower dilution rate and a higher concentration of hydrocarbons to be achieved without condensation of water vapor.

(B) These procedures include requirements that the mean exposure concentration in the inhalation test chamber on 90 percent or more of the exposure days shall be controlled as follows:

(*1*) If the species being controlled is hydrocarbon or particulate, the mean exposure concentration must be within 15 percent of the target concentration for the single species being controlled.

(*2*) For other species, the mean exposure concentration must be within 10 percent of the target concentration for the single species being controlled.

(*3*) For all species, daily monitoring of CO, CO_2, NO_X, SO_X, and total hydrocarbons in the exposure chamber shall be required. Analysis of the particle size distribution shall also be performed to establish the stability and consistency of particle size distribution in the test exposure.

(C) After the initial exhaust dilution to preserve the character of the exhaust, the exhaust stream can be further diluted in the mixing chamber (and/or after leaving the chamber) to achieve the desired biological exposure concentrations.

(v) *Verification procedures.* (A) The entire system used to dilute and transport whole combustion emissions (*i.e.*, from exhaust pipe to outlet in the biological testing chamber) shall be verified before any animal exposures begin, and verified at least weekly during testing. (See procedures at 40 CFR 86.119–90 for light-duty vehicles and § 86.1319–90 for heavy-duty engines.) Verification testing shall be accomplished by introducing a known sample at the end of the vehicle/engine exhaust pipe into the dilution system and measuring the amount exiting the system. For example, an injected hydrocarbon sample could be detected with a gas chromatograph (GC) and flame ionization detector (FID) to determine the recovery factor.

(B) [Reserved]

(vi) *Emission exposure quality control.* (A) The tester shall incorporate the additional quality assurance and safety procedures outlined in § 79.61(d) to control variability of emissions during the generation of exposure emissions during health effect testing.

(B) These procedures include requirements that the mean exposure concentration in the inhalation test chamber on 90 percent or more of the exposure days shall be controlled as follows:

(*1*) If the species being controlled is hydrocarbon or particulate, the mean exposure concentration must be within 15 percent of the target concentration for the single species being controlled.

(*2*) For other species, the mean exposure concentration must be within 10 percent of the target concentration for the single species being controlled.

(*3*) For all species, daily monitoring of CO, CO_2, NO_X, SO_X, and total hydrocarbons in the exposure chamber shall be required. Analysis of the particle size distribution shall also be performed to establish the stability and consistency of particle size distribution in the test exposure.

(C) The testing facility shall allow an audit of its premises, the qualifications, e.g., curriculum vitae, of its staff assigned to testing, and the specimens and records of the testing for registration purposes (as specified in § 79.60).

(vii) To allow for customary laboratory scheduling and unforeseen problems affecting the combustion emission generation or dilution equipment, biological exposures may be interrupted on limited occasions, as specified in § 79.61(d)(5). Interruptions exceeding these limitations shall cause the affected test(s) to be void. Testers shall be aware of concerns for backup vehicles/engines cited in paragraph (a)(7)(ii) of this section.

(3) *Generating particulate and semi-volatile emissions for biological testing.* (i) Salmonella mutagenicity testing, pursuant to § 79.68, shall be conducted on extracts of the particulate and semi-volatile emission phases separately. These emissions shall be generated by operating the test vehicle/engine over the appropriate FTP driving schedule (see paragraph (e)(2)(ii) of this section) and collected and analyzed according to methods described in 40 CFR 86.1301 through 1344 (further information on this subject may be found in Perez, *et al.* CRC Report No. 551, 1987 listed in § 79.57(g)).

(A) Particulate emissions shall be collected on particulate filters and extracted from the collection equipment for use in biological tests. The number of repetitions of the applicable driving schedule required to collect sufficient quantities of the particulate emissions will vary, depending on the characteristics of the engine, the test fuel, and the requirements of the biological test protocol. The particulate sample may be collected on one or more filters, as necessary.

(B) Semi-volatile emissions shall be collected immediately downstream from the particulate collection filters using porous polymer resin beds, or their equivalent, designed for their capture. Semi-volatile phase emissions shall be collected on one apparatus. The time spent collecting sufficient quantities of the test substances in emissions samples will vary, depending on the emission characteristics of the engine and fuel or additive/base fuel mixture and on the requirements of the biological test protocol.

(ii) The extraction method shall be determined by the specifications of the biological test for which the emissions are used.

(iii) Particulate and semi-volatile emission storage requirements are as specified in § 79.57(e)(1)(iv).

(iv) Particulate and semi-volatile phase emission collection, handling and extraction methods shall not alter the composition of the collected material, to the extent possible.

(v) Particulate emissions shall not be combined with semi-volatile phase emissions.

(f) *Generation of evaporative emissions for characterization and biological testing.* (1) Except as provided in paragraph (f)(5) of this section, an evaporative emissions generator shall be used to volatilize samples of a fuel or additive/base fuel mixture for evaporative emissions characterization and biological testing. Emissions shall be collected and sampled using equipment and methods appropriate for use with the compounds being characterized and the requirements of the emission characterization analysis. In the case of potentially explosive test substance concentrations, care must be taken to avoid generating explosive atmospheres. The tester is referred to § 79.61(d)(8) for considerations involving explosivity.

(2) *Evaporative Emissions Generator (EEG) Description.* An EEG is a fuel tank or vessel to which heat is applied causing a portion of the fuel to evaporate at a desired rate. The manufacturer has flexibility in designing an EEG for testing a particular fuel or fuel additive. The sample used to generate emissions in the EEG shall be renewed at least daily.

(i) The evaporation chamber shall be made from materials compatible with the fuels and additives being tested and shall be equipped with a drain.

(ii) The chamber shall be filled to 40 ±5 percent of its interior volume with the fuel or additive/base fuel mixture being tested, with the remainder of the volume containing air.

(iii) The concentration of the evaporated fuel or additive/base fuel mixture in the vapor space of the evaporation

chamber during the time emissions are being withdrawn for testing shall not vary by more than 10 percent from the equilibrium concentration in the vapor space of emissions generated from the fresh fuel or additive/base fuel mixture in the chamber.

(A) During the course of a day's emission generation period, the level of fuel in the EEG shall be maintained to within 7 percent of its height at the start of the daily exposure period.

(B) The fuel used in the EEG shall be drained at the end of each daily exposure. The EEG shall be refilled with a fresh supply of the test formulation before the start of each daily exposure.

(C) The vapor space of the evaporation chamber shall be well mixed throughout the time emissions are being withdrawn for testing.

(iv) The size of the evaporation chamber shall be determined by the rate at which evaporative emissions shall be needed in the test animal exposure chambers and the rate at which the fuel or the additive/base fuel mixture evaporates. The rate of evaporative emissions may be adjusted by altering the size of the EEG or by using one or more additional EEG(s). Emission rate modifications shall not be adjusted by temperature control or pressure control.

(v) The temperature of the fuel or additive/base fuel mixture in the evaporation chamber shall be 130 °F±5 °F. The vapors shall maintain this temperature up to the point in the system where the vapors are diluted.

(vi) The pressure in the vapor space of the evaporation chamber and the dilution and sampling apparatus shall stay within 10 percent of ambient atmospheric pressure.

(vii) There shall be no controls or equipment on the evaporation chamber system that change the concentration or composition of the vapors generated for testing.

(viii) Manufacturers shall perform verification testing of evaporative emissions in a manner analogous to the verification testing performed for combustion emissions.

(3) For biological testing, vapor shall be withdrawn from the EEG at a constant rate, diluted with air as required for the particular study, and conducted immediately to the biological testing chamber(s) in a manner similar to the method used in § 79.57(e), excluding the mixing chamber therein. The rate of emission generation shall be high enough to supply the biological exposure chamber with sufficient emissions to allow for a minimum of fifteen air changes per exposure chamber per hour. To allow for customary laboratory scheduling and for unforeseen problems with the evaporative emission generation or dilution equipment, biological exposures may be interrupted on limited occasions, as specified in § 79.61(d)(5). Interruptions exceeding these limitations shall cause the affected test(s) to be void.

(4) For characterization of evaporative emissions, samples of equilibrated emissions to the vapor space of the EEG shall be withdrawn into Tedlar bags, then stored and analyzed as specified in § 79.52(b).

(5) A manufacturer (or group of manufacturers) may submit to EPA a request for approval of an alternative method of generating evaporative emissions for use in emission characterization and biological tests required under this subpart.

(i) To be approved by EPA, the request must fully explain the rationale for the proposed method as well as the technical procedures, quality control, and safety precautions to be used, and must demonstrate that the proposed method will meet the following criteria:

(A) The emission mixture generated by the proposed procedures must be reasonably similar to the equilibrium composition of the vapor which occurs in the vehicle fuel tank head space when the subject fuel or additive/base fuel mixture is in use and near-maximum in-use temperatures are encountered.

(B) The emissions mixture generated by the proposed method must be sufficiently concentrated to provide adequate exposure levels in the context of the required toxicologic tests.

(C) The proposed method must include procedures to ensure that the emissions delivered to the biologic exposure chambers will provide a reasonably constant exposure atmosphere over time.

(ii) If EPA approves the request, EPA will place in the public record a copy of the request, together with all supporting procedural descriptions and justifications, and will notify the public of its availability by publishing a notice in the FEDERAL REGISTER.

(g) *References.* For additional background information on the emission generation procedures outlined in this paragraph (g), the following references may be consulted. Additional references can be found in § 79.61(f).

(1) AIGER/CRADA (American Industry/Government Emissions Research Cooperative Research and Development Agreement, ''Specifications for Advanced Emissions Test Instrumentation'' AIGER PD–94–1, Revision 5.0, February, 1994

(2) Black, F. and R. Snow, ''Constant Volume Sampling System Water Condensation'' SAE #940970 in ''Testing and Instrumentation'' SP–1039, Society of Automotive Engineers, Feb. 28–Mar. 3, 1994.

(3) Perez, J.M., Jass, R.E., Leddy, D.G., eds. ''Chemical Methods for the Measurement of Unregulated Diesel Emissions (CRC-APRAC Project No. CAPI–1–64), Coordinating Research Council, CRC Report No. 551, August, 1987.

(4) Phalen, R.F., ''Inhalation Studies: Foundations and Techniques'', CRC Press, Inc., Boca Raton, Florida, 1984.

[59 FR 33093, June 27, 1994, as amended at 61 FR 36511, July 11, 1996; 63 FR 63792, Nov. 17, 1998]

§ 79.58 Special provisions.

(a) *Relabeled Additives.* Sellers of relabeled additives (pursuant to § 79.50) are not required to comply with the provisions of § 79.52, 79.53 or 79.59, except that such sellers are required to comply with § 79.59(b).

(b) *Low Vapor Pressure Fuels and Additives.* Fuels which are not designated as ''evaporative fuels'' and fuel additives which are not designated as ''evaporative fuel additives'' pursuant to the definitions in § 79.50 need not undergo the emission characterization or health effects testing specified in §§ 79.52 and 79.53 for evaporative emissions. At EPA's discretion, the evaporative emissions of such fuels and additives may be required to undergo Tier 3 testing, pursuant to § 79.54.

(c) *Alternative Tier 2 Provisions.* At EPA's discretion, EPA may modify the standard Tier 2 health effects testing requirements for a fuel or fuel additive (or group). Such modification may encompass substitution, addition, or deletion of Tier 2 studies or study specifications, and/or changes in underlying engine or equipment requirements, except that a Tier 2 endpoint will not be deleted in the absence of existing information deemed adequate by EPA or alternative testing requirements for such endpoint. If warranted by the particular requirements, EPA will allow additional time for completion of the alternative Tier 2 testing program.

(1) When EPA intends to require testing in lieu of or in addition to standard Tier 2 health testing, EPA will notify the responsible manufacturer (or group) by certified letter of the specific tests which EPA is proposing to require in lieu of or in addition to Tier 2, and the proposed schedule for completion and submission of such tests. A copy of the letter will be placed in the public record. EPA intends to send the notification prior to November 27, 1995, or in the case of new fuels and additives (as defined in § 79.51(c)(3)), within 18 months of EPA's receipt of an intent to register such product. However, EPA's notification to the manufacturer (or group) may occur at any time up to EPA's receipt of Tier 2 data for the product(s) in question. EPA will provide the manufacturer with 60 days from the date of receipt of the notice to comment on the tests which EPA is proposing to require and on the proposed schedule. If the manufacturer believes that undue costs or hardships will occur as a result of EPA's delay in providing notification of alternative Tier 2 requirements, then the manufacturer's comments should describe and include evidence of such hardship. In particular, if the standard Tier 2 toxicology testing for the fuel or additive in question has already begun at the time the manufacturer receives EPA's notification of proposed alternative Tier 2 requirements, then EPA shall refrain from requiring alternative Tier 2 tests provided that EPA receives the

standard Tier 2 data and report (pursuant to § 79.59(c)) within one year of the date on which the toxicology testing began.

(2) EPA will issue a notice in the FEDERAL REGISTER announcing its intent to require special testing in lieu of or in addition to the standard Tier 2 testing for a particular fuel or additive manufacturer or group, and that a copy of the letter to the manufacturer or group describing the proposed alternative Tier 2 testing for that manufacturer or group is available in the public record for review and comment. The public shall have a minimum of 30 days after the publication of this notice to comment on the proposed alternative Tier 2 testing.

(3) EPA will include in the public record a copy of any timely comments concerning the proposed alternative Tier 2 testing requirements received from the affected manufacturer or group or from the public, and the responses of EPA to such comments. After reviewing all such comments received, EPA may adopt final alternative Tier 2 requirements by sending a certified letter describing such final requirements to the manufacturer or group. In that event, EPA will also issue a notice in the FEDERAL REGISTER announcing that it has adopted final alternative Tier 2 requirements and that a copy of the letter adopting the requirements has been included in the public record.

(4) After EPA's receipt of a manufacturer's (or group's) submittals, EPA will notify the responsible manufacturer (or group) regarding the adequacy of the submittal and potential Tier 3 testing requirements according to the same relative time intervals and by the same procedures as specified in § 79.51 (c) and (d) for routine Tier 1 and Tier 2 submittals.

(d) *Small Business Provisions.* (1) For purposes of these provisions, when subsidiary, divisional, or other complex business arrangements exist, *manufacturer* is defined as the business entity with ultimate ownership of all related parents, subsidiaries, divisions, branches, or other operating units. *Total annual sales* means the average of the manufacturer's total sales revenue, excluding any revenue which represents the collection of Federal, State, or local excise taxes or sales taxes, in each of the three years prior to such manufacturer's submittal to EPA of the basic registration information pursuant to § 79.59(b)(2) through (b)(5).

(2) *Provisions Applicable to Baseline and Non-baseline Products.* A manufacturer with total annual sales less than $50 million is not required to meet the requirements of Tier 1 and Tier 2 (specified in §§ 79.52 and 79.53) with regard to such manufacturer's fuel and/or additive products which meet the criteria for inclusion in a Baseline or Non-baseline group pursuant to § 79.56. Upon such manufacturer's satisfactory completion and submittal to EPA of basic registration data specified in § 79.59(b), the manufacturer may request and EPA shall issue a registration for such product, subject to § 79.51(c) and paragraphs (d)(4) and (d)(5) of this section.

(3) *Provisions Applicable to Atypical Products.* A manufacturer with total annual sales less than $10 million is not required to meet the requirements of Tier 2 (specified in § 79.53) in regard to such manufacturer's fuel and/or additive products which meet the criteria for inclusion in an Atypical group pursuant to § 79.56. Upon such manufacturer's satisfactory completion and submittal to EPA of basic registration data specified in § 79.59(b) and Tier 1 information specified in § 79.52 for an Atypical fuel or additive, the manufacturer may request and EPA shall issue a registration for such product, subject to § 79.51(c) and paragraphs (d)(4) and (d)(5) of this section. Compliance with Tier 1 requirements under this paragraph may be accomplished by the individual manufacturer or as a part of a group pursuant to § 79.56.

(4) Any registration granted by EPA under the provisions of this section are conditional upon satisfactory completion of any Tier 3 requirements which EPA may subsequently impose pursuant to § 79.54. In such circumstances, the Tier 3 requirements might include (but would not necessarily be limited to) information which would otherwise have been required under the provisions of Tier 1 and/or Tier 2.

(5) The provisions in paragraphs (d)(2) and (d)(3) of this section are voluntary

on the part of qualifying small manufacturers. Such manufacturers may choose to fulfill the standard requirements for their fuels and additives, individually or as a part of a group, rather than satisfying only the requirements specified in paragraphs (d)(2) and/or (d)(3) of this section. If a qualifying small manufacturer elects these special provisions rather than the standard requirements for a product, then EPA will generally assume that any additional information submitted by other manufacturers, for fuels and additives meeting the same grouping criteria (under § 79.56) as that of the small manufacturer's product, is pertinent to further testing and/or regulatory decisions that may affect the small manufacturer's product.

(6) In the case of an additive for which the manufacturer is not required to meet the requirements of Tier 2 pursuant to paragraph (d)(3) of this section:

(i) A fuel manufacturer which blends such an additive into fuel shall not be required to meet the requirements of Tier 2 with respect to such additive/fuel mixture.

(ii) An additive manufacturer which blends such an additive with one or more other registered additive products and/or with substances containing only carbon and/or hydrogen shall not be required to meet the requirements of Tier 2 with respect to such additive or additive blend.

(e) *Aftermarket Aerosol Additives.* (1) To obtain registration for an aftermarket aerosol fuel additive, the manufacturer shall provide existing information in the form of a literature search, a discussion of the potential exposure(s) to such product, and the basic registration data specified in § 79.59(b).

(2) The literature search shall include existing data on potential health and welfare effects due to exposure to the aerosol product itself and its raw (uncombusted) components. The analysis for potential exposures shall be based on the actual or anticipated production volume and market distribution of the particular aerosol product, and its estimated frequency of use. Other Tier 1 and Tier 2 requirements are not routinely required for aerosol products. EPA will review the submitted information and, at EPA's discretion, may require from the manufacturer further information and/or testing under Tier 3 on a case-by-case basis.

[59 FR 33093, June 27, 1994, as amended at 62 FR 12571, Mar. 17, 1997]

§ 79.59 Reporting requirements.

(a) *Timing.* (1) The manufacturer of each designated fuel or fuel additive shall submit to EPA the basic registration data detailed in paragraph (b) of this section. Forms for submitting this data may be obtained from EPA at the following address: Director, Field Operations and Support Division, 6406J—Fuel/Additives Registration, U.S. Environmental Protection Agency, 1200 Pennsylvania Ave., NW., Washington, DC 20460.

(i) For existing products (pursuant to § 79.51(c)(1)), manufacturers shall submit the basic registration data as specified in § 79.59(b) to EPA by November 28, 1994.

(ii) For registrable products (pursuant to § 79.51(c)(2)), manufacturers shall submit the basic registration data as specified in § 79.59(b) to apply for registration for such product.

(iii) For new products (pursuant to § 79.51(c)(3)), manufacturers are strongly encouraged to notify EPA of an intent to obtain product registration by submitting the basic registration data as specified in § 79.59(b) prior to starting Tiers 1 and 2.

(2) The information specified in paragraph (c) of this section shall be submitted to the address in paragraph (a)(1) of this section at the conclusion of activities performed in compliance with Tiers 1 and 2 under the provisions of §§ 79.52 and 79.53, according to the time constraints specified in § 79.51 (c) through (d).

(3) The information specified in paragraph (d) of this section shall be submitted to EPA at the address in paragraph (a)(1) of this section at the conclusion of activities performed in compliance with Tier 3 under the provisions of § 79.54.

(b) *Basic Registration Data.* Each manufacturer of a designated fuel or fuel additive shall submit the following data in regard to such fuel or fuel additive:

(1) The information specified in § 79.11 or § 79.21. If such information has already been submitted to EPA in compliance with subpart B or C of this part, and if such previous information is accurate and up-to-date, the manufacturer need not resubmit this information.

(2) Annual production volume of the fuel or fuel additive product, in units of gallons per year if most commonly sold in liquid form or kilograms per year if most commonly sold in solid form. For fuels and fuel additives already in production, the most recent annual production volume and the volume projected to be produced in the third subsequent year shall be provided. For products not yet in production, the best estimate of expected annual volume during the third year of production shall be provided.

(3) *Market distribution of the product.* For fuels and bulk additives, this information shall be presented as the percent of total annual sales volume marketed in each Petroleum Administration for Defense District (PADD). The States comprising each PADD are listed in the following section. For aftermarket additives, the distribution data shall be presented as the percent of total annual sales volume marketed in each State. For a product not yet in production, the manufacturer shall present the distribution (by PADD or State, as applicable) projected to occur during the third year of production.

(i) The following States and jurisdictions are included in PADD I:

Connecticut	New Jersey
Delaware	New York
District of Columbia	North Carolina
Florida	Pennsylvania
Georgia	Rhode Island
Maine	South Carolina
Maryland	Vermont
Massachusetts	Virginia
New Hampshire	West Virginia

(ii) The following States are included in PADD II:

Illinois	Nebraska
Indiana	North Dakota
Iowa	Ohio
Kansas	Oklahoma
Kentucky	South Dakota
Michigan	Tennessee
Minnesota	Wisconsin
Missouri	

(iii) The following States are included in PADD III:

Alabama	Mississippi
Arkansas	New Mexico
Louisiana	Texas

(iv) The following States are included in PADD IV:

Colorado	Montana
Idaho	Utah
	Wyoming

(v) The following States are included in PADD V:

Alaska	Hawaii
Arizona	Nevada
California	Oregon
	Washington

(4) Any applicable information pursuant to the grouping provisions in § 79.56, as follows:

(i) If the manufacturer has enrolled or intends to enroll the product in a fuel/additive group, the relevant group and the person(s) or entity expected to submit information on behalf of the group must be identified.

(ii) If the manufacturer intends to rely on registration information previously submitted by another manufacturer (or group) for registration of other product(s) in the same fuel/additive group, then the original submitter and its product (or product group) shall be identified. In such cases, the manufacturer shall provide evidence that the original submitter has been notified of the use of its registration data and that the manufacturer has complied or intends to comply with the proportional reimbursement required under § 79.56(c) of this rule.

(5) Any applicable information pursuant to the special provisions in § 79.58, as follows:

(i) If the manufacturer claims applicability of the special provisions for relabeled additives, pursuant to § 79.58(a), then the manufacturer and brand name of the original product shall be given.

(ii) If the manufacturer claims applicability of any small business provisions pursuant to § 79.58(d), the average of the manufacturer's total annual sales revenue for the previous three years shall be given.

(iii) If the manufacturer claims applicability of the special provisions for aerosol products, pursuant to § 79.58(e),

then the purpose and recommended frequency of use shall be given.

(c) *Tier 1 and Tier 2 Reports*. If the results of Tiers 1 and 2 are reported to EPA at the same time, then the report shall include the following documents in paragraphs (c)(1) through (7) of this section. If Tier 1 and Tier 2 results are submitted to EPA separately, then the separate Tier 1 report shall include only documents in paragraphs (c) (1) through (4), (c)(6), and associated appendices in paragraphs (c)(7) of this section, and the separate Tier 2 report shall include only documents in paragraphs (c)(1) through (3), (c)(5), (c)(6), and associated appendices in paragrpah (c)(7) of this section. In addition, manufacturers complying with Tier 2 requirements according to one of the time schedules specified in § 79.51(c)(1)(ii)(B), § 79.51(c)(1)(vi)(B)(*2*), or § 79.51(c)(1)(vii)(B)(*2*) must submit evidence of a suitable arrangement for completion of Tier 2 (e.g., a copy of a signed contract with a qualified laboratory for applicable Tier 2 services) by the date specified in the applicable time schedule.

(1) *Cover page*. (i) Identification of test substance,

(ii) Name and address of the manufacturer of the test substance,

(iii) Name and phone number of a designated contact person,

(iv) Group information, if applicable, including:

(A) Group name or grouping criteria,

(B) Name and address of responsible organization or entity reporting for the group,

(C) Product trade name and manufacturer of each member fuel and additive to which the report pertains.

(2) *Executive Summary*. Text overview of the significant results and conclusions obtained as a result of completing the requirements of Tier 1 and/or Tier 2, including references if used to support such results and conclusions.

(3) *Test Substance Information*. Test substance description, including, as applicable,

(i) Base fuel parameter values (including types and concentrations of base fuel additives) or test fuel composition (if a fuel other than the base fuel is used in testing). These values must be provided for each of the fuel parameters specified in § 79.55 for the applicable fuel family.

(ii) Test additive composition and concentration

(4) *Summary of Tier 1*. (i) *Literature Search*. Pursuant to § 79.52(d), the literature search shall include a text summary of the methods and results of the literature search, including the following:

(A) Identification of person(s) performing the literature search,

(B) Description of data sources accessed, search strategy used, search period, and terms included in literature search,

(C) Documentation of all unpublished in-house and other privately-conducted studies,

(D) Tables summarizing the protocols and results of all cited studies,

(E) Summary of significant results and conclusions with respect to the effects of the emissions of the subject fuel or fuel additive on the public health and welfare, including references if used to support such results and conclusions.

(F) Statement of the extent to which the literature search has produced adequate information comparable to that which would otherwise be obtained through the performance of applicable emission characterization requirements under § 79.52(b) and/or health effects testing requirements under § 79.53, including justifications and specific references.

(ii) *Emission Characterization*. Pursuant to § 79.52(b), the emission characterization shall include:

(A) Name, address, and telephone number of the laboratory performing the characterization,

(B) Name and description of analytic methods used for characterization.

(5) *Summary of Tier 2*. For each health effects test performed pursuant to the provisions of § 79.53, the Tier 2 summary shall contain the following information:

(i) Name, address, and telephone number of the testing facility,

(ii) Summary of procedures (including quality assurance, quality control and compliance with Good Laboratory Practice Standards as specified in

§ 79.60), findings, and conclusions, including references if used to support such results and conclusions,

(iii) Description of any problems and their resolution.

(6) *Conclusions*. The conclusions shall identify the need for further testing, if that need exists, or justify that current testing and/or available information is adequate for the tier(s) included in the report.

(7) *Appendices*. The appendices shall contain detailed documentation related to the summary information described in this section, including, at a minimum, the following five appendices:

(i) Literature search appendices shall contain:

(A) Copies of literature source outputs, including reference lists and associated abstracts from database searches, printed or on 3½ inch IBM-compatible computer diskettes;

(B) Summary tables organized by health or welfare endpoint and type of emission (e.g., combustion, evaporation, individual emission product), presenting in tabular form the following information at a minimum: number and species of test subjects, exposure concentrations/duration, positive (*i.e.*, abnormal) findings including numbers of test subjects involved, and bibliographic references;

(C) Complete documentation and/or reprints of articles for any previous study relied upon for satisfying emission characterization and/or Tier 2 test requirements; and

(D) Full reports for unpublished/in-house studies.

(ii) Emissions characterization appendices shall contain:

(A) Complete laboratory reports, including documentation of calibration and verification procedures;

(B) Documentation of the emissions generation procedures used; and

(C) Lists of speciated emission products and their emission rates reported in units of grams/mile.

(iii) [Reserved]

(iv) Tier 2 appendices shall contain, for each test performed:

(A) Complete protocol used;

(B) Documentation of emission generation procedures; and

(C) Complete laboratory report in compliance with the reporting standards in § 79.60, including detailed test results and conclusions, and descriptions of any problems encountered and their resolution.

(v) Laboratory certification/accreditation information, personnel credentials, and statements of compliance with the Good Laboratory Practices Standards specified in § 79.60 and the requirements in § 79.53(c)(1).

(d) *Tier 3 Report*. Subject to applicability as specified in § 79.54, each manufacturer of a designated fuel or fuel additive, or each group of such manufacturers pursuant to the provisions of § 79.56, shall submit the following information with respect to each Tier 3 test conducted for such fuels or fuel additives:

(1) The test objectives, including a summary of the reason(s) why such additional testing, beyond Tiers 1 and 2, was required;

(2) Name, address, and telephone number of each testing facility;

(3) Summary of test procedures, results and conclusions;

(4) Complete documentation of test protocols and emission generation procedures, complete laboratory reports in compliance with the reporting standards of § 79.60, detailed test results and conclusions, including references if used to support such results and conclusions, and descriptions of any problems encountered and their resolution; and

(5) Laboratory certification information, personnel credentials, and statements of compliance with the Good Laboratory Practices Standards specified in § 79.60.

(e) *Availability of Information*. (1) All health and safety test data and other information concerning health and welfare effects which is submitted by any manufacturer or group pursuant to §§ 79.52(c), 79.53, or 79.54, shall be considered to be public information and shall be made available to the public by EPA upon request. A reasonable fee may be charged by EPA for copying such materials. Any manufacturer or group who claims that any information concerning the composition of a fuel or

fuel additive product, or any other information, submitted under this subpart is confidential business information must state this claim in writing at the time of the submittal.

(2) To assert a business confidentiality claim concerning any information submitted under this subpart, the submitter must:

(i) Clearly mark the information as confidential at each location it appears in the submission; and

(ii) Submit with the information claimed as confidential a separate document setting forth the claim and listing each location at which the information appears in the submission.

(3) If any person subsequently requests access to information submitted under this subpart (other than health and safety test data and other information concerning health and welfare effects), and such information is subject to a claim of business confidentiality, the request and any subsequent disclosure shall be governed by the provisions of 40 CFR part 2.

[59 FR 33093, June 27, 1994, as amended at 62 FR 12572, 12576, Mar. 17, 1997]

§ 79.60 Good laboratory practices (GLP) standards for inhalation exposure health effects testing.

(a) *General Provisions*—(1) *Scope*. (i) This section prescribes good laboratory practices (GLPs) for conducting inhalation exposure studies relating to motor vehicle emissions health effects testing under this part. These directions are intended to ensure the quality and integrity of health effects data submitted pursuant to registration regulations issued under sections 211(b) or 211(e) of the Clean Air Act (CAA) (42 U.S.C. 7545).

(ii) This section applies to any study described by paragraph (a)(1)(i) of this section which any person conducts, initiates, or supports on or after May 27, 1994.

(iii) It is EPA's policy that all health effects data developed under sections 211(b) and (e) of CAA be in accordance with provisions of this section. If data are not developed in accordance with the provisions of this section, EPA may consider such data insufficient to evaluate the health effects of a motor vehicle's fuel or fuel additive emissions, unless the submitter provides additional information demonstrating that the data are reliable and adequate and EPA determines that the data are sufficient.

(2) *Definitions*. As used in this section, the following terms shall have the meanings specified:

Batch means a specific quantity or lot of a test fuel, additive/base fuel mixture, or reference substance that has been characterized according to § 79.60(f)(1)(i).

CAA means the Clean Air Act.

Carrier means any material which is combined with engine/motor vehicle emissions or a reference substance for administration to a test system. ''Carrier'' includes, but is not limited to, clean, filtered air, water, feed, and nutrient media.

Control atmosphere means clean, filtered air which is administered to the test system in the course of a study for the purpose of establishing a basis for comparison with the test atmosphere for chemical or biological measurements.

Experimental start date means the first date the test atmosphere is applied to the test system.

Experimental termination date means the last date on which data are collected directly from the study.

Person includes an individual, partnership, corporation, association, scientific or academic establishment, government agency, or organizational unit thereof, and any other legal entity.

Quality assurance unit means any person or organizational element, except the study director, designated by testing facility management to perform the duties relating to quality assurance of the studies.

Raw data means any laboratory worksheets, records, memoranda, notes, or exact copies thereof, that are the result of original observations and activities of a study and are necessary for the reconstruction and evaluation of the report of that study. In the event that exact transcripts of raw data have been prepared (e.g., tapes which have been transcribed verbatim, dated, and verified accurate by signature), the exact copy or exact transcript may be substituted for the original source as raw data. ''Raw data'' may include

photographs, videotape, microfilm or microfiche copies, computer printouts, magnetic media, including dictated observations, and recorded data from automated instruments.

Reference substance means any chemical substance or mixture, analytical standard, or material other than engine/motor vehicle emissions and/or its carrier, that is administered to or used in analyzing the test system in the course of a study. A ''reference substance'' is used to establish a basis for comparison with the test atmosphere for known chemical or biological measurements, *i.e.*, positive or negative control substance.

Specimen means any material derived from a test system for examination or analysis.

Sponsor means person who initiates and supports, by provision of financial or other resources, a study or a person who submits a study to EPA in response to the CAA Section 211(b) or 211(e) Fuels and Fuel Additives Registration Rule or a testing facility, if it both initiates and actually conducts the study.

Study means any experiment, at one or more test sites, in which a test system is exposed to a test atmosphere under laboratory conditions to determine or help predict the health effects of that exposure in humans, other living organisms, or media.

Study completion date means the date the final report is signed by the study director.

Study director means the individual responsible for the overall conduct of a study.

Study initiation date means the date the protocol is signed by the study director.

Test substance means a vapor and/or aerosol mixture composed of engine/motor vehicle emissions and clean, filtered air which is administered directly, or indirectly, by the inhalation route to a test system in a study which develops data to meet the registration requirements of CAA section 211(b) or (e).

Test system means any animal, microorganism, chemical or physical matrix, to which the test, control, or reference substance is administered or added for study. This definition also includes appropriate groups or components of the system not treated with the test, control, or reference substance.

Testing facility means a person who actually conducts a study, *i.e.*, actually uses the test substance in a test system. ''Testing facility'' encompasses only those operational units that are being or have been used to conduct studies.

TSCA means the Toxic Substances Control Act (15 U.S.C. 2601 *et seq.*).

(3) *Applicability to studies performed under grants and contracts.* When a sponsor or other person utilizes the services of a consulting laboratory, contractor, or grantee to perform all or a part of a study to which this section applies, it shall notify the consulting laboratory, contractor, or grantee that the service is, or is part of, a study that must be conducted in compliance with the provisions of this section.

(4) *Statement of compliance or non-compliance.* Any person who submits to EPA a test in compliance with registration regulations issued under CAA section 211(b) or section 211(e) shall include in the submission a true and correct statement, signed by the sponsor and the study director, of one of the following types:

(i) A statement that the study was conducted in accordance with this section; or

(ii) A statement describing in detail all differences between the practices used in the study and those required by this section; or

(iii) A statement that the person was not a sponsor of the study, did not conduct the study, and does not know whether the study was conducted in accordance with this section.

(5) *Inspection of a testing facility.* (i) A testing facility shall permit an authorized employee or duly designated representative of EPA, at reasonable times and in a reasonable manner, to inspect the facility and to inspect (and in the case of records also to copy) all records and specimens required to be maintained regarding studies to which this section applies. The records inspection and copying requirements shall not apply to quality assurance unit records of findings and problems, or to actions recommended and taken, except the EPA may seek production of

these records in litigation or formal adjudicatory hearings.

(ii) EPA will not consider reliable for purposes of showing that a test substance does or does not present a risk of injury to health or the environment any data developed by a testing facility or sponsor that refuses to permit inspection in accordance with this section. The determination that a study will not be considered reliable does not, however, relieve the sponsor of a required test of any obligation under any applicable statute or regulation to submit the results of the study to EPA.

(6) *Effects of non-compliance.* (i) Pursuant to sections 114, 208, and 211(d) of the CAA, it shall be a violation of this section and a violation of this rule (40 CFR part 79, subpart F) if:

(A) The test is not being or was not conducted in accordance with any requirement of this part; or

(B) Data or information submitted to EPA under part 79, including the statement required by § 79.60(a)(4), include information or data that are false or misleading, contain significant omissions, or otherwise do not fulfill the requirements of this part; or

(C) Entry in accordance with § 79.60(a)(5) for the purpose of auditing test data is denied.

(ii) EPA, at its discretion, may not consider reliable for purposes of showing that a chemical substance or mixture does not present a risk of injury to health any study which was not conducted in accordance with this part. EPA, at its discretion, may rely upon such studies for purposes of showing adverse effects. The determination that a study will not be considered reliable does not, however, relieve the sponsor of a required test of the obligation under any applicable statute or regulation to submit the results of the study to EPA.

(iii) If data submitted in compliance with registration regulations issued under CAA section 211(b) or section 211(e) are not developed in accordance with this section, EPA may determine that the sponsor has not fulfilled its obligations under 40 CFR part 79 and may require the sponsor to develop data in accordance with the requirements of this section in order to satisfy such obligations.

(b) *Organization and Personnel*—(1) *Personnel.* (i) Each individual engaged in the conduct of or responsible for the supervision of a study shall have education, training, and experience, or combination thereof, to enable that individual to perform the assigned functions.

(ii) Each testing facility shall maintain a current summary of training and experience and job description for each individual engaged in or supervising the conduct of a study.

(iii) There shall be a sufficient number of personnel for the timely and proper conduct of the study according to the protocol.

(iv) Personnel shall take necessary personal sanitation and health precautions designed to avoid contamination of test fuel and additive/base fuel mixtures, test and reference substances, and test systems.

(v) Personnel engaged in a study shall wear clothing appropriate for the duties they perform. Such clothing shall be changed as often as necessary to prevent microbiological, radiological, or chemical contamination of test systems and test, control, and reference substances.

(vi) Any individual found at any time to have an illness that may adversely affect the quality and integrity of the study shall be excluded from direct contact with test systems, fuel and fuel/additive mixtures, test and reference substances and any other operation or function that may adversely affect the study until the condition is corrected. All personnel shall be instructed to report to their immediate supervisors any health or medical conditions that may reasonably be considered to have an adverse effect on a study.

(2) *Testing facility management.* For each study, testing facility management shall:

(i) Designate a study director as described in § 79.60(b)(3) before the study is initiated.

(ii) Replace the study director promptly if it becomes necessary to do so during the conduct of a study.

(iii) Assure that there is a quality assurance unit as described in § 79.60(b)(4).

(iv) Assure that test fuels and fuel/additive mixtures and test and reference substances have been identified as to content, strength, purity, stability, and uniformity, as applicable.

(v) Assure that personnel, resources, facilities, equipment, materials and methodologies are available as scheduled.

(vi) Assure that personnel clearly understand the functions they are to perform.

(vii) Assure that any deviations from these regulations reported by the quality assurance unit are communicated to the study director and corrective actions are taken and documented.

(3) *Study director*. For each study, a scientist or other professional person with a doctorate degree or equivalent in toxicology or other appropriate discipline shall be identified as the study director. The study director has overall responsibility for the technical conduct of the study, as well as for the interpretation, analysis, documentation, and reporting of results, and represents the single point of study control. The study director shall assure that:

(i) The protocol, including any changes, is approved as provided by § 79.60(g)(1)(i) and is followed;

(ii) All experimental data, including observations of unanticipated responses of the test system are accurately recorded and verified;

(iii) Unforeseen circumstances that may affect the quality and integrity of the study are noted when they occur, and corrective action is taken and documented;

(iv) Test systems are as specified in the protocol;

(v) All applicable good laboratory practice regulations are followed; and

(vi) All raw data, documentation, protocols, specimens, and final reports are archived properly during or at the close of the study.

(4) *Quality assurance unit*. A testing facility shall have a quality assurance unit which shall be responsible for monitoring each study to assure management that the facilities, equipment, personnel, methods, practices, records, and controls are in conformance with the regulations in this section. For any given study, the quality assurance unit shall be entirely separate from and independent of the personnel engaged in the direction and conduct of that study. The quality assurance unit shall conduct inspections and maintain records appropriate to the study.

(i) *Quality assurance unit duties*. (A) Maintain a copy of a master schedule sheet of all studies conducted at the testing facility indexed by test substance and containing the test system, nature of study, date study was initiated, current status of each study, identity of the sponsor, and name of the study director.

(B) Maintain copies of all protocols pertaining to all studies for which the unit is responsible.

(C) Inspect each study at intervals adequate to ensure the integrity of the study and maintain written and properly signed records of each periodic inspection showing the date of the inspection, the study inspected, the phase or segment of the study inspected, the person performing the inspection, findings and problems, action recommended and taken to resolve existing problems, and any scheduled date for re-inspection. Any problems which are likely to affect study integrity found during the course of an inspection shall be brought to the attention of the study director and management immediately.

(D) Periodically submit to management and the study director written status reports on each study, noting any problems and the corrective actions taken.

(E) Determine that no deviations from approved protocols or standard operating procedures were made without proper authorization and documentation.

(F) Review the final study report to assure that such report accurately describes the methods and standard operating procedures, and that the reported results accurately reflect the raw data of the study.

(G) Prepare and sign a statement to be included with the final study report which shall specify the dates inspections were made and findings reported to management and to the study director.

(ii) The responsibilities and procedures applicable to the quality assurance unit, the records maintained by

the quality assurance unit, and the method of indexing such records shall be in writing and shall be maintained. These items including inspection dates, the study inspected, the phase or segment of the study inspected, and the name of the individual performing the inspection shall be made available for inspection to authorized employees or duly designated representatives of EPA.

(iii) An authorized employee or a duly designated representative of EPA shall have access to the written procedures established for the inspection and may request test facility management to certify that inspections are being implemented, performed, documented, and followed up in accordance with this paragraph.

(c) *Facilities*—(1) *General*. Each testing facility shall be of suitable size and construction to facilitate the proper conduct of studies. Testing facilities which are not completely located within an indoor controlled environment shall be of suitable location/proximity to facilitate the proper conduct of studies. Testing facilities shall be designed so that there is a degree of separation that will prevent any function or activity from having an adverse effect on the study.

(2) *Test system care facilities*. (i) A testing facility shall have a sufficient number of animal rooms or other test system areas, as needed, to ensure proper separation of species or test systems, quarantine or isolation of animals or other test systems, and routine or specialized housing of animals or other test systems.

(ii) A testing facility shall have a number of animal rooms or other test system areas separate from those described in paragraph (a) of this section to ensure isolation of studies being done with test systems or test, control, and reference substances known to be biohazardous, including volatile atmospheres and aerosols, radioactive materials, and infectious agents. The animal handling facility must operate under the supervision of a veterinarian.

(iii) Separate areas shall be provided, as appropriate, for the diagnosis, treatment, and control of laboratory test system diseases. These areas shall provide effective isolation for the housing of test systems either known or suspected of being diseased, or of being carriers of disease, from other test systems.

(iv) Facilities shall have proper provisions for collection and disposal of contaminated air, water, or other spent materials. When animals are housed, facilities shall exist for the collection and disposal of all animal waste and refuse or for safe sanitary storage of waste before removal from the testing facility. Disposal facilities shall be so provided and operated as to minimize vermin infestation, odors, disease hazards, and environmental contamination.

(v) Facilities shall have provisions to regulate environmental conditions (e.g., temperature, humidity, day length, etc.) as specified in the protocol.

(3) *Test system supply/operation areas*. (i) There shall be storage areas, as needed, for feed, bedding, supplies, and equipment. Storage areas for feed and bedding shall be separated from areas where the test systems are located and shall be protected against infestation or contamination. Perishable supplies shall be preserved by appropriate means.

(ii) Separate laboratory space and other space shall be provided, as needed, for the performance of the routine and specialized procedures required by studies.

(4) *Facilities for handling test fuels and fuel/additive mixtures and reference substances*. (i) As necessary to prevent contamination or mixups, there shall be separate areas for:

(A) Receipt and storage of the test fuels and fuel/additive mixtures and reference substances;

(B) Mixing of the test fuels, fuel/additive mixtures, and reference substances with a carrier, *i.e.*, liquid hydrocarbon; and

(C) Storage of the test fuels, fuel/additive mixtures, and reference substance/carrier mixtures.

(ii) Storage areas for test fuels and fuel/additive mixtures and reference substances and for reference mixtures shall be separate from areas housing the test systems and shall be adequate

to preserve the identity, strength, purity, and stability of the substances and mixtures.

(5) *Specimen and data storage facilities.* Space shall be secured for archives for the storage and retrieval of all raw data and specimens from completed studies.

(d) *Equipment*—(1) *Equipment design.* Equipment used in the generation, measurement, or assessment of data and equipment used for facility environmental control shall be of appropriate design and adequate capacity to function according to the protocol and shall be suitably located for operation, inspection, cleaning, and maintenance.

(2) *Maintenance and calibration of equipment.* (i) Equipment shall be adequately inspected, cleaned, and maintained. Equipment used for the generation, measurement, or assessment of data shall be adequately tested, calibrated, and/or standardized.

(ii) The written standard operating procedures required under § 79.60(e)(1)(ii)(K) shall set forth in sufficient detail the methods, materials, and schedules to be used in the routine inspection, cleaning, maintenance, testing, calibration, and/or standardization of equipment, and shall specify, when appropriate, remedial action to be taken in the event of failure or malfunction of equipment. The written standard operating procedures shall designate the person responsible for the performance of each operation.

(iii) Written records shall be maintained of all inspection, maintenance, testing, calibrating, and/or standardizing operations. These records, containing the date of the operation, shall describe whether the maintenance operations were routine and followed the written standard operating procedures. Written records shall be kept of nonroutine repairs performed on equipment as a result of failure and malfunction. Such records shall document the nature of the defect, how and when the defect was discovered, and any remedial action taken in response to the defect.

(e) *Testing Facilities Operation*—(1) *Standard operating procedures.* (i) A testing facility shall have standard operating procedures in writing, setting forth study methods that management is satisfied are adequate to insure the quality and integrity of the data generated in the course of a study. All deviations in a study from standard operating procedures shall be authorized by the study director and shall be documented in the raw data. Significant changes in established standard operating procedures shall be properly authorized in writing by management.

(ii) Standard operating procedures shall be established for, but not limited to, the following:

(A) Test system room preparation;

(B) Test system care;

(C) Receipt, identification, storage, handling, mixing, and method of sampling of test fuels and fuel/additive mixtures and reference substances;

(D) Test system observations;

(E) Laboratory or other tests;

(F) Handling of test animals found moribund or dead during study;

(G) Necropsy or postmortem examination of test animals;

(H) Collection and identification of specimens;

(I) Histopathology

(J) Data handling, storage and retrieval.

(K) Maintenance and calibration of equipment.

(L) Transfer, proper placement, and identification of test systems.

(iii) Each laboratory or other study area shall have immediately available manuals and standard operating procedures relative to the laboratory procedures being performed. Published literature may be used as a supplement to standard operating procedures.

(iv) A historical file of standard operating procedures, and all revisions thereof, including the dates of such revisions, shall be maintained.

(2) *Reagents and solutions.* All reagents and solutions in the laboratory areas shall be labeled to indicate identity, titer or concentration, storage requirements, and expiration date. Deteriorated or outdated reagents and solutions shall not be used.

(3) *Animal and other test system care.* (i) There shall be standard operating procedures for the housing, feeding, handling, and care of animals and other test systems.

(ii) All newly received test systems from outside sources shall be isolated

and their health status or appropriateness for the study shall be evaluated. This evaluation shall be in accordance with acceptable veterinary medical practice or scientific methods.

(iii) At the initiation of a study, test systems shall be free of any disease or condition that might interfere with the purpose or conduct of the study. If during the course of the study, the test systems contract such a disease or condition, the diseased test systems shall be isolated, if necessary. These test systems may be treated for disease or signs of disease provided that such treatment does not interfere with the study. The diagnosis, authorization of treatment, description of treatment, and each date of treatment shall be documented and shall be retained.

(iv) When laboratory procedures require test animals to be manipulated and observed over an extended period of time or when studies require test animals to be removed from and returned to their housing units for any reason (e.g., cage cleaning, treatment, etc.), these test systems shall receive appropriate identification (e.g., tattoo, color code, etc.). Test system identification shall conform with current laboratory animal handling practice. All information needed to specifically identify each test system within the test system-housing unit shall appear on the outside of that unit. Suckling animals are excluded from the requirement of individual identification unless otherwise specified in the protocol.

(v) Except as specified in paragraph (e)(3)(v)(A) of this section, test animals of different species shall be housed in separate rooms when necessary. Test animals of the same species, but used in different studies, shall not ordinarily be housed in the same room when inadvertent exposure to the test or reference substances or test system mixup could affect the outcome of either study. If such mixed housing is necessary, adequate differentiation by space and identification shall be made.

(A) Test systems that may be used in multispecies tests need not be housed in separate rooms, provided that they are adequately segregated to avoid mixup and cross-contamination.

(B) [Reserved]

(vi) Cages, racks, pens, enclosures, and other holding, rearing, and breeding areas, and accessory equipment, shall be cleaned and sanitized at appropriate intervals.

(vii) Feed and water used for the test animals shall be analyzed periodically to ensure that contaminants known to be capable of interfering with the study and reasonably expected to be present in such feed or water are not present at greater than trace levels. Documentation of such analyses shall be maintained as raw data.

(viii) Bedding used in animal cages or pens shall not interfere with the purpose or conduct of the study and shall be changed as often as necessary to keep the animals dry and clean.

(ix) If any pest control materials are used, the use shall be documented. Cleaning and pest control materials that interfere with the study shall not be used.

(x) All test systems shall be acclimatized to the environmental conditions of the test, prior to their use in a study.

(f) T*est fuels, additive/base fuel mixtures, and reference substances*—(1) *Test fuel, fuel/additive mixture, and reference substance identity*. (i) The product brand name/service mark, strength, purity, content, or other characteristics which appropriately define the test fuel, fuel/additive mixture, or reference substance shall be reported for each batch and shall be documented before its use in a study. Methods of synthesis, fabrication, or derivation, as appropriate, of the test fuel, fuel/additive mixture, or reference substance shall be documented by the sponsor or the testing facility, and such location of documentation shall be specified.

(ii) The stability of test fuel, fuel/additive mixture, and reference substances under storage conditions at the test site shall be known for all studies.

(2) *Test fuel, additive/base fuel mixture, and reference substance handling*. Procedures shall be established for a system for the handling of the test fuel, fuel/additive mixture, and reference substance(s) to ensure that:

(i) There is proper storage.

(ii) Distribution is made in a manner designed to preclude the possibility of

contamination, deterioration, or damage.

(iii) Proper identification is maintained throughout the distribution process.

(iv) The receipt and distribution of each batch is documented. Such documentation shall include the date and quantity of each batch distributed or returned.

(3) Mixtures of test emissions or reference solutions with carriers.

(i) For test emissions or each reference substance mixed with a carrier, tests by appropriate analytical methods shall be conducted:

(A) To determine the uniformity of the test substance and to determine, periodically, the concentration of the test emissions or reference substance in the mixture;

(B) When relevant to the conduct of the experiment, to determine the solubility of each reference substance in the carrier mixture before the experimental start date; and

(C) To determine the stability of test emissions or a reference solution in the test substance before the experimental start date or concomitantly according to written standard operating procedures, which provide for periodic analysis of each batch.

(ii) Where any of the components of the reference substance/carrier mixture has an expiration date, that date shall be clearly shown on the container. If more than one component has an expiration date, the earliest date shall be shown.

(iii) If a chemical or physical agent is used to facilitate the mixing of a test substance with a carrier, assurance shall be provided that the agent does not interfere with the integrity of the test.

(g) *Protocol for and conduct of a study*—(1) *Protocol.* (i) Each study shall have a written protocol that clearly indicates the objectives and all methods for the conduct of the study. The protocol shall contain but shall not be limited to the following information:

(A) A descriptive title and statement of the purpose of the study.

(B) Identification of the test fuel, fuel/additive mixture, and reference substance by name, chemical abstracts service (CAS) number or code number, as applicable.

(C) The name and address of the sponsor and the name and address of the testing facility at which the study is being conducted.

(D) The proposed experimental start and termination dates.

(E) Justification for selection of the test system, as necessary.

(F) Where applicable, the number, body weight, sex, source of supply, species, strain, substrain, and age of the test system.

(G) The procedure for identification of the test system.

(H) A description of the experimental design, including methods for the control of bias.

(I) Where applicable, a description and/or identification of the diet used in the study. The description shall include specifications for acceptable levels of contaminants that are reasonably expected to be present in the dietary materials and are known to be capable of interfering with the purpose or conduct of the study if present at levels greater than established by the specifications.

(J) Each concentration level, expressed in milligrams per cubic meter of air or other appropriate units, of the test or reference substance to be administered and the frequency of administration.

(K) The type and frequency of tests, analyses, and measurements to be made.

(L) The records to be maintained.

(M) The date of approval of the protocol by the sponsor and the dated signature of the study director.

(N) A statement of the proposed statistical method.

(ii) All changes in or revisions of an approved protocol and the reasons therefor shall be documented, signed by the study director, dated, and maintained with the protocol.

(2) *Conduct of a study.* (i) The study shall be conducted in accordance with the protocol.

(ii) The test systems shall be monitored in conformity with the protocol.

(iii) Specimens shall be identified by test system, study, nature, and date of collection. This information shall be located on the specimen container or

shall accompany the specimen in a manner that precludes error in the recording and storage of data.

(iv) In animal studies where histopathology is required, records of gross findings for a specimen from postmortem observations shall be available to a pathologist when examining that specimen histopathologically.

(v) All data generated during the conduct of a study, except those that are generated by automated data collection systems, shall be recorded directly, promptly, and legibly in ink. All data entries shall be dated on the day of entry and signed or initialed by the person entering the data. Any change in entries shall be made so as not to obscure the original entry, shall indicate the reason for such change, and shall be dated and signed or identified at the time of the change. In automated data collection systems, the individual responsible for direct data input shall be identified at the time of data input. Any change in automated data entries shall be made so as not to obscure the original entry, shall indicate the reason for change, shall be dated, and the responsible individual shall be identified.

(h) *Records and Reports*—(1) *Reporting of study results*. (i) A final report shall be prepared for each study and shall include, but not necessarily be limited to, the following:

(A) Name and address of the facility performing the study and the dates on which the study was initiated and was completed, terminated, or discontinued.

(B) Objectives and procedures stated in the approved protocol, including any changes in the original protocol.

(C) Statistical methods employed for analyzing the data.

(D) The test fuel, additive/base fuel mixture, and test and reference substances identified by name, chemical abstracts service (CAS) number or code number, strength, purity, content, or other appropriate characteristics.

(E) Stability, and when relevant to the conduct of the study, the solubility of the test emissions and reference substances under the conditions of administration.

(F) A description of the methods used.

(G) A description of the test system used. Where applicable, the final report shall include the number of animals or other test organisms used, sex, body weight range, source of supply, species, strain and substrain, age, and procedure used for identification.

(H) A description of the concentration regimen as daily exposure period, *i.e.*, number of hours, and exposure duration, *i.e.*, number of days.

(I) A description of all circumstances that may have affected the quality or integrity of the data.

(J) The name of the study director, the names of other scientists or professionals and the names of all supervisory personnel, involved in the study.

(K) A description of the transformations, calculations, or operations performed on the data, a summary and analysis of the data, and a statement of the conclusions drawn from the analysis.

(L) The signed and dated reports of each of the individual scientists or other professionals involved in the study, including each person who, at the request or direction of the testing facility or sponsor, conducted an analysis or evaluation of data or specimens from the study after data generation was completed.

(M) The locations where all specimens, raw data, and the final report are to be kept or stored.

(N) The statement, prepared and signed by the quality assurance unit, as described in § 79.60(b)(4)(i)(G).

(ii) The final report shall be signed and dated by the study director.

(iii) Corrections or additions to a final report shall be in the form of an amendment by the study director. The amendment shall clearly identify that part of the final report that is being added to or corrected and the reasons for the correction or addition, and shall be signed and dated by the person responsible. Modification of a final report to comply with the submission requirements of EPA does not constitute a correction, addition, or amendment to a final report.

(iv) A copy of the final report and of any amendment to it shall be maintained by the sponsor and the test facility.

(2) *Storage and retrieval of records and data.* (i) All raw data, documentation, records, protocols, specimens, and final reports generated as a result of a study shall be retained. Specimens obtained from mutagenicity tests, wet specimens of blood, urine, feces, and biological fluids, do not need to be retained after quality assurance verification. Correspondence and other documents relating to interpretation and evaluation of data, other than those documents contained in the final report, also shall be retained.

(ii) All raw data, documentation, protocols, specimens, and interim and final reports shall be archived for orderly storage and expedient retrieval. Conditions of storage shall minimize deterioration of the documents or specimens in accordance with the requirements for the time period of their retention and the nature of the documents of specimens. A testing facility may contract with commercial archives to provide a repository for all material to be retained. Raw data and specimens may be retained elsewhere provided that the archives have specific reference to those other locations.

(iii) An individual shall be identified as responsible for the archiving of records.

(iv) Access to archived material shall require authorization and documentation.

(v) Archived material shall be indexed to permit expedient retrieval.

(3) *Retention of records.* (i) Record retention requirements set forth in this section do not supersede the record retention requirements of any other regulations in this subchapter.

(ii) Except as provided in paragraph (h)(3)(iii) of this section, documentation records, raw data, and specimens pertaining to a study and required to be retained by this part shall be archived for a period of at least ten years following the completion of the study.

(iii) Wet specimens, samples of test fuel, additive/base fuel mixtures, or reference substances, and specially prepared material which are relatively fragile and differ markedly in stability and quality during storage, shall be retained only as long as the quality of the preparation affords evaluation. Specimens obtained from mutagenicity tests, wet specimens of blood, urine, feces, biological fluids, do not need to be retained after quality assurance verification. In no case shall retention be required for a longer period than that set forth in paragraph (h)(3)(ii) of this section.

(iv) The master schedule sheet, copies of protocols, and records of quality assurance inspections, as required by § 79.60(b)(4)(iii) shall be maintained by the quality assurance unit as an easily accessible system of records for the period of time specified in paragraph (h)(3)(ii) of this section.

(v) Summaries of training and experience and job descriptions required to be maintained by § 79.60(b)(1)(ii) may be retained along with all other testing facility employment records for the length of time specified in paragraph (h)(3)(ii) of this section.

(vi) Records and reports of the maintenance and calibration and inspection of equipment, as required by § 79.60(d)(2) (ii) and (iii), shall be retained for the length of time specified in paragraph (h)(3)(ii) of this section.

(vii) If a facility conducting testing or an archive contracting facility goes out of business, all raw data, documentation, and other material specified in this section shall be transferred to the sponsor of the study for archival.

(viii) Records required by this section may be retained either as original records or as true copies such as photocopies, microfilm, microfiche, or other accurate reproductions of the original records.

§ 79.61 Vehicle emissions inhalation exposure guideline.

(a) *Purpose.* This guideline provides additional information on methodologies required to conduct health effects tests involving inhalation exposures to vehicle combustion emissions from fuels or fuel/additive mixtures. Where this guideline and the other health effects testing guidelines in 40 CFR 79.62 through 79.68 specify differing values

for the same test parameter, the specifications in the individual health test guideline shall prevail for that health effect endpoint.

(b) *Definitions.* For the purposes of this section the following definitions apply.

Acute inhalation study means a short-term toxicity test characterized by a single exposure by inhalation over a short period of time (at least 4 hours and less than 24 hours), followed by at least 14 days of observation.

Aerodynamic diameter means the diameter of a sphere of unit density that has the same settling velocity as the particle of the test substance. It is used to compare particles of different sizes, densities and shapes, and to predict where in the respiratory tract such particles may be deposited. It applies to the size of aerosol particles.

Chronic inhalation study means a prolonged and repeated exposure by inhalation for the life span of the test animal; technically, two years in the rat.

Concentration means an exposure level. Exposure is expressed as weight or volume of test aerosol/substance per volume of air, usually mg/m^3 or as parts per million (ppm) over a given time period. Micrograms per cubic meter ($\mu g/m^3$) or parts per billion may be appropriate, as well.

Cumulative toxicity means the adverse effects of repeated exposures occurring as a result of prolonged action or increased concentration of the administered test substance or its metabolites in the susceptible tissues.

Inhalable diameter means that aerodynamic diameter of a particle which is considered to be inhalable for the organism. It is used to refer to particles which are capable of being inhaled and may be deposited anywhere within the respiratory tract from the trachea to the alveoli.

Mass median aerodynamic diameter (MMAD) means the calculated aerodynamic diameter, which divides the particles of an aerosol in half based on the mass of the particles. Fifty percent of the particles in mass will be larger than the median diameter, and fifty percent will be smaller than the median diameter. MMAD describes the particle distribution of any aerosol based on the weight and size of the particles. MMAD and the geometric standard deviation describe the particle-size distribution.

Material safety data sheet (MSDS) means documentation or information on the physical, chemical, and hazardous characteristics of a given chemical, usually provided by the product's manufacturer.

Reynolds number means a dimensionless number that is proportional to the ratio of inertial forces to frictional forces acting on a fluid. It quantitatively provides a measure of whether flow is laminar or turbulent. A fluid traveling through a pipe is fully developed into a laminar flow for a Reynolds number less than 2000, and fully developed into a turbulent flow for a Reynolds number greater than 4000.

Subacute inhalation toxicity means the adverse effects occurring as a result of the repeated daily exposure of experimental animals to a chemical by inhalation for part (less than 10 percent) of a lifespan; generally, less than 90 days.

Subchronic inhalation study means a repeated exposure by inhalation for part (approximately 10 percent) of a life span of the exposed test animal.

Toxic effect means an adverse change in the structure or function of an experimental animal as a result of exposure to a chemical substance.

(c) *Principles and design criteria of inhalation exposure systems.* Proper conduct of inhalation toxicity studies of the emissions of fuels and additive/fuel mixtures requires that the exposure system be designed to ensure the controlled generation of the exposure atmosphere, the adequate dilution of the test emissions, delivery of the diluted exposure atmosphere to the test animals, and use of appropriate exposure chamber systems selected to meet criteria for a given exposure study.

(1) *Emissions generation.* Emissions shall be generated according to the specifications in 40 CFR 79.57.

(2) *Dilution and delivery systems.* (i) The delivery system is the means used to transport the emissions from the generation system to the exposure system. The dilution system is generally a component of the delivery system.

(ii) Dilution provides control of the emissions concentration delivered to

the exposure system, serving the function of diluting the associated combustion gases, such as carbon monoxide, carbon dioxide, nitrogen oxides, sulfur dioxide and other noxious gases and vapors, to levels that will ensure that there are no significant or measurable responses in the test animals as a result of exposure to the combustion gases. The formation of particle species is strongly dependent on the dilution rate, as well.

(iii) The engine exhaust system shall connect to the first-stage-dilution section at 90° to the axis of the dilution section. This is then connected to a right angle elbow on the center line of the dilution section. Engine emissions are injected through the elbow so that exhaust flow is concurrent to dilution flow.

(iv) *Materials*. In designing the dilution and delivery systems, the use of plastic, e.g., PVC and similar materials, copper, brass, and aluminum pipe and tubing shall be avoided if there exists a possibility of chemical reaction occurring between emissions and tubing. Stainless steel pipe and tubing is recommended as the best choice for most emission dilution and delivery applications, although glass and teflon may be appropriate, as well.

(v) *Flow requirements*. (A) Conduit for dilute raw emissions shall be of such dimensions as to provide residence times for the emissions on the order of less than one second to several seconds before the emissions are further diluted and introduced to the test chambers. With the high flow rates in the dilute raw emissions conduit, it will be necessary to sample various portions of the dilute emissions for delivering differing concentrations to the test chambers. The unused portions of the emissions stream are normally exhausted to the atmosphere outside of the exposure facility.

(B) Dimensions of the dilute raw exhaust conduit shall be such that, at a minimum, the flow Reynolds number is 70,000 or greater (see Mokler, *et al.*, 1984 in paragraph (f)(13) of this section). This will maintain highly turbulent flow conditions so that there is more complete mixing of the exhaust emissions.

(C) *Wall losses*. The delivery system shall be designed to minimize wall losses. This can be done by sizing the tubing or pipe to maintain laminar flow of the diluted emissions to the exposure chamber. A flow Reynolds number of 1000–3000 will ensure minimal wall losses. Also, the length of and number and degree of bends in the delivery lines to the exposure chamber system shall be minimized.

(D) Whole-body exposure vs. nose-only exposure delivery systems. Flow rates through whole-body chamber systems are of the order of 100 liters per minute to 500 liters per minute. Nose-only systems are on the order of less than 50 liters per minute. To maintain laminar flow conditions, the principles described in paragraph (c)(2)(v)(C) of this section apply to both systems.

(vi) *Dilution requirements*. (A) To maintain the water vapor, and dissolved organic compounds, in the raw exhaust emissions stream, a manufacturer/tester will initially dilute one part emissions with a minimum of five parts clean, filtered air (see Hinners, *et al.*, 1979 in paragraph (f)(11) of this section). Depending on the water vapor content of a particular fuel/additive mixture's combustion emissions and the humidity of the dilution air, initial exhaust dilutions as high as 1:15 or 1:20 may be necessary to maintain the general character of the exhaust as it cools, e.g., M100. At this point, it is expected that the exhaust stream would be further diluted to more appropriate levels for rodent health effects testing.

(B) A maximum concentration (minimum dilution) of the raw exhaust going into the test animal cages is anticipated to lie in the range between 1:5 and 1:50 exhaust emissions to clean, filtered air. The minimum concentration (maximum dilution) of raw exhaust for health effects testing is anticipated to be in range between 1:100 and 1:150. Individual manufacturers will treat these ranges as approximations only and will determine the optimum range of emission concentrations to elicit effects in Tier 2 health testing for their particular fuel/fuel additive mixture.

(3) *Exposure chamber systems*—(i) *Referenced Guidelines*. (A) The U.S. Department of Health and Human Services

''Guide for the Care and Use of Laboratory Animals'' (*Guide*), 1985 cited in paragraph (c)(3)(ii)(A)(*4*), and in paragraphs (d)(2)(i), (d)(2)(ii), (d)(2)(iii), (d)(4)(ii), and (d)(4)(iii) of this section, has been incorporated by reference.

(B) This incorporation by reference was approved by the Director of the Federal Register in accordance with 5 U.S.C. 552(a) and 1 CFR part 51. Copies may be purchased from the Superintendent of Documents, U.S. Government Printing Office, Washington, DC 20402. Copies may be inspected at U.S. EPA, OAR, 401 M Street SW, Washington, DC 20460 or at the National Archives and Records Administration (NARA). For information on the availability of this material at NARA, call 202–741–6030, or go to: *http://www.archives.gov/federal_register/code_of_federal_regulations/ibr_locations.html*.

(ii) *Exposure chambers*. There are two basic types of dynamic inhalation exposure chambers, whole-body chambers and nose-/head-only exposure chambers (see Cheng and Moss, 1989 in paragraph (f)(8) of this section).

(A) *Whole-body chambers*. (*1*) The flow rate through a chamber shall be maintained at 15 air changes per hour.

(*2*) The chambers are usually maintained at a slightly negative pressure (0.5 to 1.5 inch of water) to prevent leakage of test substance into the exposure room.

(*3*) The exposure chamber shall be designed in such a way as to provide uniform distribution of exposure concentrations in all compartments (see Cheng *et al.*, 1989 in paragraph (f)(7) of this section).

(*4*) Animals are housed in separate compartments inside the chamber, where the whole surface area of an animal is exposed to the test material. The spaces required for different animal species shall follow the *Guide*. In general, the volume of animal bodies occupy less than 5 percent of the chamber volume.

(B) *Head/nose-only exposure chambers*. (*1*) In head/nose-only exposure chambers, only the head (oronasal) portion of the animal is exposed to the test material.

(*2*) The chamber volume and flow rates are much less than in the whole-body exposure chambers because the subjects are usually restrained in a tube holder where the animal's breathing can be easily monitored. The head/nose-only exposure chamber is suitable for short-term exposures or when use of a small amount of test material is required.

(iii) Since whole-body exposure appears to be the least stressful mode of exposure, it is the preferred method. In general, head/nose only exposure, which is sometimes used to avoid concurrent exposure by the dermal or oral routes, *i.e.*, grooming, is not recommended because of the stress accompanying the restraining of the animals. However, there may be specific instances where it may be more appropriate than whole-body exposure. The tester shall provide justification for its selection.

(d) *Inhalation exposure procedures*—(1) *Animal selection*. (i) The rat is the preferred species for vehicle emission inhalation health effects testing. Commonly used laboratory strains shall be used. Any rodent species may be used, but the tester shall provide justification for the choice of that species.

(ii) Young adult animals, approximately ten weeks of age for the rat, shall be used. At the commencement of the study, the weight variation of animals used shall not exceed ±20 percent of the mean weight for each sex. Animals shall be randomly assigned to treatment and control groups according to their weight.

(iii) An equal number of male and female rodents shall be used at each concentration level. Situations may arise where use of a single sex may be appropriate. Females, in general, shall be nulliparous and nonpregnant.

(iv) The number of animals used at each concentration level and in the control group(s) depends on the type of study, number of biological end points used in the toxicity evaluation, the pre-determined sensitivity of detection and power of significance of the study, and the animal species. For an acute study, at least five animals of each sex shall be used in each test group. For both the subacute and subchronic studies, at least 10 rodents of each sex shall be used in each test group. For a chronic study, at least 20 male and 20 female

rodents shall be used in each test group.

(A) If interim sacrifices are planned, the number of animals shall be increased by the number of animals scheduled to be sacrificed during the course of the study.

(B) For a chronic study, the number of animals at the termination of the study must be adequate for a meaningful and valid statistical evaluation of chronic effects.

(v) A concurrent control group is required. This group shall be exposed to clean, filtered air under conditions identical to those used for the group exposed to the test atmosphere.

(vi) The same species/strain shall be used to make comparisons between fuel-only and fuel/additive mixture studies. If another species/strain is used, the tester shall provide justification for its selection.

(2) *Animal handling and care.* (i) A key element in the conduct of inhalation exposure studies is the proper handling and care of the test animal population. Therefore, the exposure conditions must conform strictly with the conditions for housing and animal care and use set forth in the *Guide*.

(ii) In whole-body exposure chambers, animals shall be housed in individual caging. The minimum cage size per animal will be in accordance with instructions set forth in the *Guide*.

(iii) Chambers shall be cleaned and maintained in accordance with recommendations and schedules set forth in the *Guide*.

(A) Observations shall be made daily with appropriate actions taken to minimize loss of animals to the study (e.g., necropsy or refrigeration of animals found dead and isolation or sacrifice of weak or moribund animals). Exposure systems using head/nose-only exposure chambers require no special daily chamber maintenance. Chambers shall be inspected to ensure that they are clean, and that there are no obstructions in the chamber which would restrict air flow to the animals. Whole-body exposure chambers will be inspected on a minimum of twice daily, once before exposures and once after exposures.

(B) Signs of toxicity shall be recorded as they are observed, including the time of onset, degree, and duration.

(C) Cage-side observations shall include, but are not limited to: changes in skin, fur, eye and mucous membranes, respiratory, autonomic, and central nervous systems, somatomotor activity, and behavioral patterns. Particular attention shall be directed to observation of tremors, convulsions, salivation, diarrhea, lethargy, sleep, and coma.

(iv) Food and water will be withheld from animals for head/nose-only exposure systems. For whole-body-exposure systems, water only may be provided. When the exposure generation system is not operating, food will be available *ad libitum*. During operation of the generation system, food will be withheld to avoid possible contamination by emissions.

(v) At the end of the study period, all survivors in the main study population shall be sacrificed. Moribund animals shall be removed and sacrificed when observed.

(3) *Concentration levels and selection.* (i) In acute and subacute toxicity tests, at least three exposure concentrations and a control group shall be used and spaced appropriately to produce test groups with a range of toxic effects and mortality rates. The data shall be sufficient to produce a concentration-response curve and permit an acceptable estimation of the median lethal concentration.

(ii) In subchronic and chronic toxicity tests, testers shall use at least three different concentration levels, with a control exposure group, to determine a concentration-response relationship. Concentrations shall be spaced appropriately to produce test groups with a range of toxic effects. The concentration-response data may also be sufficient to determine a NOAEL, unless the result of a limit test precludes such findings. The criteria for selecting concentration levels has been published (40 CFR 798.2450 and 798.3260).

(A) The highest concentration shall result in toxic effects but not produce an incidence of fatalities which would prevent a meaningful evaluation of the study.

(B) The lowest concentration shall not produce toxic effects which are directly attributable to the test exposure. Where there is a useful estimation of human exposure, the lowest concentration shall exceed this.

(C) The intermediate concentration level(s) shall produce minimal observable toxic effects. If more than one intermediate concentration level is used, the concentrations shall be spaced to produce a gradation of toxic effects.

(D) In the low, intermediate, and control exposure groups, the incidence of fatalities shall be low to absent, so as not to preclude a meaningful evaluation of the results.

(4) Exposure chamber environmental conditions. The following environmental conditions in the exposure chamber are critical to the maintenance of the test animals: flow; temperature; relative humidity; lighting; and noise.

(i) Filtered and conditioned air shall be used during exposure, to dilute the exhaust emissions, and during non- exposure periods to maintain environmental conditions that are free of trace gases, dusts, and microorganisms on the test animals. Twelve to fifteen air changes per hour will be provided at all times to whole-body-exposure chambers. The minimum air flow rate for head/nose-only exposure chambers will be a function of the number of animals and the average minute volume of the animals:

$$Q_{minimum}(L/min)=2 \times \text{number of animals} \times \text{average minute volume}$$

(see Cheng and Moss, 1989 in paragraph (f)(8) of this section).

(ii) Recommended ranges of temperature for various species are given in the *Guide*. The recommended temperature ranges will be used for establishing temperature conditions of whole-body-exposure chambers. For rodents in whole-body-exposure chambers, the recommended temperature is 22 °C ±2 °C and for rabbits, it is 20 °C ±3 °C. Temperature ranges have not been established for head/nose-only tubes; however, recommended maximum temperature limits have been established at the Inhalation Toxicology Research Institute (see Barr, 1988 in paragraph (f)(1) of this section). Maximum temperature for rats and mice in head/nose-only tubes is 23 °C.

(iii) *Relative humidity*. The relative humidity in the chamber air is important for heat balance and shall be maintained between 40 percent and 60 percent, but in certain instances, this may not be practicable. Testers shall follow *Guide* recommends for a 30 percent to 70 percent relative humidity range for rodents in exposure chambers.

(iv) *Lighting*. Light intensity of 30 foot candles at 3 ft. from the floor of the exposure facility is recommended (see Rao, 1986 in paragraph (f)(16) of this section).

(5) *Exposure conditions*. Unless precluded by the requirements of a particular test protocol, animal subjects shall be exposed to the test atmosphere based on a nominal 5-day-per-week regimen, subject to the following rules:

(i) Each daily exposure must be at least 6 hours plus the time necessary to build the chamber atmosphere to 90 percent of the target exposure atmosphere. Interruptions of daily exposures caused by technical difficulties, if infrequent in occurrence and limited in duration, may be made up the same day by adding equivalent exposure time after the technical problem has been corrected and the exposure atmosphere restored to the required level.

(ii) Normally, no more than two non-exposure days may occur consecutively during the test period. However, if a third consecutive non-exposure day should occur due to circumstances beyond the tester's control, it may be remedied by adding a supplementary exposure day. Federal and other holidays do not constitute such circumstances. Whenever possible, a make-up day should be taken at the first opportunity, i.e., on the next day which would otherwise have been an intentional non-exposure day. If a compensatory day must be scheduled at the end of the standard test period, then it may occur either:

(A) Immediately following the last standard exposure day, with no intervening non-exposure days; or

(B) With up to two intervening non-exposure days, provided that no fewer than two consecutive compensatory exposure days are completed before the

test is terminated and the animals sacrificed.

(iii) Except as allowed in paragraph (d)(5)(ii)(B) of this section, in no case shall there be fewer than four exposure days per week at any time during the test period.

(iv) A nominal 90-day (13-week) subchronic test period shall include no fewer than 63 total exposure days.

(6) *Exposure atmosphere.* (i) The exposure atmosphere shall be held as constant as is practicable and must be monitored continuously or intermittently, depending on the method of analysis, to ensure that exposure levels are at the target values or within stated limits during the exposure period. Sampling methodology will be determined based on the type of generation system and the type of exposure chamber system specified for the exposure study.

(A) Integrated samples of test atmosphere aerosol shall be taken daily during the exposure period from a single representative sample port in the chamber near the breathing zone of the animals. Gas samples shall be taken daily to determine concentrations (ppm) of the major vapor components of the test atmosphere including CO, CO_2, NO_X, SO_2, and total hydrocarbons.

(B) To ensure that animals in different locations of the chamber receive a similar exposure atmosphere, distribution of an aerosol or vapor concentration in exposure chambers can be determined without animals during the developmental phase of the study, or it can be determined with animals early in the study. For head/nose-only exposure chambers, it may not be possible to monitor the chamber distribution during the exposure, because the exposure port contains the animal.

(C) During the development of the emissions generation system, particle size analysis shall be performed to establish the stability of an aerosol concentration with respect to particle size. Over the course of the exposure, analysis shall be conducted as often as is necessary to determine the consistency of particle size distribution.

(D) *Chamber rise and fall times.* The rise time required for the exposure concentration to reach 90 percent of the stable concentration after the generator is turned on, and the fall time when the chamber concentration decreases to 10 percent of the stable concentration after the generation system is stopped shall be determined in the developmental phase of the study. Time-integrated samples collected for calculating exposure concentrations shall be taken after the rise time. The daily exposure time is exclusive of the rise or the fall time.

(ii) Instrumentation used for a given study will be determined based on the type of generation system and the type of exposure chamber system specified for the exposure study.

(A) For exhaust studies, combustion gases shall be sampled by collecting exposure air in bags and then analyzing the collected air sample to determine major components of the combustion gas using gas analyzers. Exposure chambers can also be connected to gas analyzers directly by using sampling lines and switching valves. Samples can be taken more frequently using the latter method. Aerosol instruments, such as photometers, or time-integrated gravimetric determination may be used to determine the stability of any aerosol concentration in the chamber.

(B) For evaporative emission studies, concentration of fuel vapors can usually be determined by using a gas chromatograph (GC) and/or infrared (IR) spectrometry. Grab samples for intermittent sampling can be taken from the chamber by using bubble samplers with the appropriate solvent to collect the vapors, or by collecting a small volume of air in a syringe. Intermediate or continuous monitoring of the chamber concentration is also possible by connecting the chamber with a GC or IR detector.

(7) Monitoring chamber environmental conditions may be performed by a computer system or by exposure system operating personnel.

(i) The flow-metering device used for the exposure chambers must be a continuous monitoring device, and actual flow measurements must be recorded at least every 30 minutes. Accuracy must be ±5 percent of full scale range. Measurement of air flow through the

exposure chamber may be accomplished using any device that has sufficient range to accurately measure the air flow for the given chamber. Types of flow metering devices include rotameters, orifice meters, venturi meters, critical orifices, and turbinemeters (see Benedict, 1984 in paragraph (f)(4) and Spitzer, 1984 in paragraph (f)(17) of this section).

(ii) *Pressure*. Pressure measurement may be accomplished using manometers, electronic pressure transducers, magnehelics, or similar devices (see Gillum, 1982 in paragraph (f)(10) of this section). Accuracy of the pressure device must be ±5 percent of full scale range. Pressure measurements must be continuous and recorded at least every 30 minutes.

(iii) *Temperature*. The temperature of exposure chambers must be monitored continuously and recorded at least every 30 minutes. Temperature may be measured using thermometers, RTD's, thermocouples, thermistors, or other devices (see Benedict, 1984 in paragraph (f)(4) of this section). It is necessary to incorporate an alarm system into the temperature monitoring system. The exposure operators must be notified by the alarm system when the chamber temperature exceeds 26.7 °C (80 °F). The exposure must be discontinued and emergency procedures enacted to immediately reduce temperatures or remove test animals from high temperature environment when chamber temperatures exceed 29 °C. Accuracy of the temperature monitoring device will be ±1 °C for the temperature range of 20–30 °C.

(iv) *Relative humidity*. The relative humidity of exposure chambers must be monitored continuously and recorded at least every 30 minutes. Relative humidity may be measured using various devices (see Chaddock, 1985 in paragraph (f)(6) of this section).

(v) Lighting shall be measured quarterly, or once at the beginning, middle, and end of the study for shorter studies.

(vi) Noise level in the exposure chamber(s) shall be measured quarterly, or once at the beginning, middle, and end of the study for shorter studies.

(vii) Oxygen content is critical, especially in nose-only chamber systems, and shall be greater than or equal to 19 percent in the test cages. An oxygen sensor shall be located at a single position in the test chamber and a lower alarm limit of 18 percent shall be used to activate an alarm system.

(8) *Safety procedures and requirements*. In the case of potentially explosive test substance concentrations, care shall be taken to avoid generating explosive atmospheres.

(i) It is mandatory that the upper explosive limit (UEL) and lower explosive limit (LEL) for the fuel and/or fuel additive(s) that are being tested be determined. These limits can be found in the material safety data sheets (MSDS) for each substance and in various reference texts. The air concentration of the fuel or additive-base fuel mixture in the generation system, dilution/delivery system, and the exposure chamber system shall be calculated to ensure that explosive limits are not present.

(ii) Storage, handling, and use of fuels or fuel/additive mixtures shall follow guidelines given in 29 CFR 1910.106.

(iii) Monitoring for carbon monoxide (CO) levels is mandatory for combustion systems. CO shall be continuously monitored in the immediate area of the engine/vehicle system and in the exposure chamber(s).

(iv) Air samples shall be taken quarterly in the immediate area of the vapor generation system and the exposure chamber system, or once at the beginning, middle, and end of the study for shorter studies. These samples shall be analyzed by methods described in paragraph (d)(6)(ii)(B) of this section.

(v) With the presence of fuels and/or fuel additives, all electrical and electronic equipment must be grounded. Also, the dilution/delivery system and chamber exposure system must be grounded. Guidelines for grounding are given in 29 CFR 1910.304.

(9) *Quality control and quality assurance procedures*—(i) *Standard operating procedures (SOPs)*. SOPs for exposure operations, sampling instruments, animal handling, and analytical methods shall be written during the developmental phase of the study.

(ii) Technicians/operators shall be trained in exposure operation, maintenance, and documentation, as appropriate, and their training shall be documented.

(iii) Flow meters, sampling instruments, and balances used in the inhalation experiments shall be calibrated with standards during the developmental phase to determine their sensitivity, detection limits, and linearity. During the exposure period, instruments shall be checked for calibration and documented to ensure that each instrument still functions properly.

(iv) The mean exposure concentration shall be within 10 percent of the target concentration on 90 percent or more of exposure days. The coefficient of variation shall be within 25 percent of target on 90 percent or more of exposure days. For example, a manufacturer might determine a mean exposure concentration of its product's exposure emissions by identifying ''marker'' compound(s) typical of the emissions of the fuel or fuel/additive mixture under study as a surrogate for the total of individual compounds in those exposure emissions. The manufacturer would note any concentration changes in the level of the ''marker'' compound(s) in the sample's daily emissions for biological testing.

(v) The spatial variation of the chamber concentration shall be 10 percent, or less. If a higher spatial variation is observed during the developmental phase, then air mixing in the chamber shall be increased. In any case, animals shall be rotated among the various cages in the exposure chamber(s) to insure each animal's uniform exposure during the study.

(e) *Data and reporting*. Data shall be summarized in tabular form, showing for each group the number of animals at the start of the test, the number of animals showing lesions, the types of lesions, and the percentage of animals displaying each type of lesion.

(1) *Treatment of results*. All observed results, quantitative and incidental, shall be evaluated by an appropriate statistical method. Any generally accepted statistical method may be used; the statistical methods shall be selected during the design of the study.

(2) *Evaluation of results*. The findings of an inhalation toxicity study should be evaluated in conjunction with the findings of preceding studies and considered in terms of the observed toxic effects and the necropsy and histopathological findings. The evaluation will include the relationship between the concentration of the test atmosphere and the duration of exposure, and the severity of abnormalities, gross lesions, identified target organs, body weight changes, effects on mortality and any other general or specific toxic effects.

(3) *Test conditions*. (i) The exposure apparatus shall be described, including:

(A) The vehicle/engine design and type, the dynamometer, the cooling system, if any, the computer control system, and the dilution system for exhaust emission generation;

(B) The evaporative emissions generator model, type, or design and its dilution system; and

(C) Other test conditions, such as the source and quality of mixing air, fuel or fuel/additive mixture used, treatment of exhaust air, design of exposure chamber and the method of housing animals in a test chamber shall be described.

(ii) The equipment for measuring temperature, humidity, particulate aerosol concentrations and size distribution, gas analyzers, fuel vapor concentrations, chamber distribution, and rise and fall time shall be described.

(iii) *Daily exposure results*. The daily record shall document the date, the start and stop times of the exposure, number of samples taken during the day, daily concentrations determined, calibration of instruments, and problems encountered during the exposure. The daily exposure data shall be signed by the exposure operator and reviewed and signed by the exposure supervisor responsible for the study.

(4) Exposure data shall be tabulated and presented with mean values and a measure of variability (*e.g.*, standard deviation), and shall include:

(i) Airflow rates through the inhalation equipment;

(ii) Temperature and humidity of air;

(iii) Chamber concentrations in the chamber breathing zone;

(iv) Concentration of combustion exhaust gases in the chamber breathing zone;

(v) Particle size distribution (e.g., mass median aerodynamic diameter and geometric standard deviation from the mean);

(vi) Rise and fall time;

(vii) Chamber concentrations during the non-exposure period; and

(viii) Distribution of test substance in the chamber.

(5) *Animal data*. Tabulation of toxic response data by species, strain, sex and exposure level for:

(i) Number of animals exposed;

(ii) Number of animals showing signs of toxicity; and

(iii) Number of animals dying.

(f) *References*. For additional background information on this exposure guideline, the following references should be consulted.

(1) Barr, E.B. (1988) Operational Limits for Temperature and Percent Oxygen During HM Nose-Only Exposures—Emergency Procedures [interoffice memorandum]. Albuquerque, NM: Lovelace Inhalation Toxicology Research Institute; May 13.

(2) Barr, E.B.; Cheng, Y.S.; Mauderly, J.L. (1990) Determination of Oxygen Depletion in a Nose-Only Exposure Chamber. Presented at: 1990 American Association for Aerosol Research; June; Philadelphia, PA: American Association for Aerosol Research; abstract no. P2e1.

(3) Barrow, C.S. (1989) Generation and Characterization of Gases and Vapors. In: McClellan, R.O., Henderson, R.F. ed. Concepts in Inhalation Toxicology. New York, NY: Hemisphere Publishing Corp., 63–84.

(4) Benedict, R.P. (1984) Fundamentals of Temperature, Pressure, and Flow Measurements. 3rd ed. New York, NY: John Wiley and Sons.

(5) Cannon, W.C.; Blanton, E.F.; McDonald, K.E. The Flow-Past Chamber. (1983) An Improved Nose-Only Exposure System for Rodents. Am. Ind. Hyg. Assoc. J. 44: 923–928.

(6) Chaddock, J.B. ed. (1985) Moisture and humidity. Measurement and Control in Science and Industry: Proceedings of the 1985 International Symposium on Moisture and Humidity; April 1985; Washington, D.C. Research Triangle Park, NC: Instrument Society of America.

(7) Cheng, Y.S.; Barr, E.B.; Carpenter, R.L.; Benson, J.M.; Hobbs, C.H. (1989) Improvement of Aerosol Distribution in Whole-Body Inhalation Exposure Chambers. Inhal. Toxicol. 1: 153–166.

(8) Cheng,Y.S.; Moss, O.R. (1989) Inhalation Exposure Systems. In: McClellan, R.O.; Henderson, R.F. ed. Concepts in Inhalation Toxicology. New York, NY: Hemisphere Publishing Corp., 19–62.

(9) Cheng, Y.S.; Yeh, H.C.; Mauderly, J.L.; Mokler, B.V. (1984) Characterization of Diesel Exhaust in a Chronic Inhalation Study. Am. Ind. Hyg. Assoc. J. 45: 547–555.

(10) Gillum, D.R. (1982) Industrial Pressure Measurement. Research Triangle Park, NC: Instrument Society of America.

(11) Hinners, R.G.; Burkart, J.K.; Malanchuk, M. (1979) Animal Exposure Facility for Diesel Exhaust Studies.

(12) Kittelson, D.B.; Dolan, D.F. (1979) Diesel exhaust aerosols. In Willeke, K. ed. Generation of Aerosols and Facilities for Exposure Experiments. Ann Arbor, MI: Ann Arbor Science Publishers Inc., 337–360.

(13) Mokler, B.V.; Archibeque, F.A.; Beethe, R.L.; Kelly, C.P.J.; Lopez, J.A.; Mauderly, J.L.; Stafford, D.L. (1984) Diesel Exhaust Exposure System for Animal Studies. Fundamental and Applied Toxicology 4: 270–277.

(14) Moore, W.; *et al*. (1978) Preliminary finding on the Deposition and Retention of Automotive Diesel Particulate in Rat Lungs. Proc. of Annual Meeting of the Air Pollution Control Assn, 3, paper 78–33.7.

(15) Raabe, O.G., Bennick, J.E., Light, M.E., Hobbs, C.H., Thomas, R.L., Tillery, M.I. (1973) An Improved Apparatus for Acute Inhalation Exposure of Rodents to Radioactive Aerosols. Toxicol & Applied Pharmaco.; 1973; 26: 264–273.

(16) Rao, G.N. (1986) Significance of Environmental Factors on the Test System. In: Hoover, B.K.; Baldwin, J.K.; Uelner, A.F.; Whitmire, C.E.; Davies, C.L.; Bristol, D.W. ed. Managing conduct and data quality of toxicology studies. Raleigh, NC: Princeton Scientific Publishing Co., Inc.: 173–185.

(17) Spitzer, D.W. (1984) Industrial Flow Measurement. Research Triangle Park, NC: Instrument Society of America.

(18) 40 CFR part 798, Health effects testing guidelines.

(19) 29 CFR part 1910, Occupational safety and health standards for general industry.

(20) FEDERAL REGISTER, 42 FR 26748, May 25, 1977.

[59 FR 33093, June 27, 1994, as amended at 61 FR 58746, Nov. 18, 1996; 61 FR 36512, July 11, 1996]

§ 79.62 Subchronic toxicity study with specific health effect assessments.

(a) *Purpose*—(1) *General toxicity*. This subchronic inhalation study is designed to determine a concentration-response relationship for potential toxic effects in rats resulting from continuous or repeated inhalation exposure to vehicle/engine emissions over a period of 90 days. A subgroup of perfusion-fixed animals is required, in addition to the main study population, for more exacting organ and tissue histology. This test will provide screening information on target organ toxicities and on concentration levels useful for running chronic studies and establishing exposure criteria. Initial information on effective concentrations/exposures of the test atmosphere may be determined from the literature of previous studies or through concentration range-finding trials prior to starting this study. This health effects screening test is not capable of directly determining those effects which have a long latency period for development (e.g., carcinogenicity and life-shortening), though it may permit the detremination of a no-observed-adverse-effect level, or NOAEL.

(2) *Specific health effects assessments (HEAs)*. These supplemental studies are designed to determine the potential for reproductive/teratologic, carcinogenic, mutagenic, and neurotoxic health effect outcomes from vehicle/engine emission exposures. They are done in combination with the subchronic toxicity study and paragraph (c) of this section or may be done separately as outlined by the appropriate test guideline.

(i) *Fertility assessment/teratology*. The fertility assessment is an *in vivo* study designed to provide information on potential health hazards to the fetus arising from the mother's repeated exposure to vehicle/engine emissions before and during her pregnancy. By including a mating of test animals, the study provides preliminary data on the effects of repeated vehicle/engine emissions exposure on gonadal function, conception, and fertility. The fertility assessment/teratology guideline is found in § 79.63.

(ii) *Micronucleus (MN) Assay*. The MN assay is an *in vivo* cytogenetic test which gives information on potential carcinogenic and/or mutagenic effects of exposure to vehicle/engine emissions. The MN assay detects damage to the chromosomes or mitotic apparatus of cells in the tissues of a test subject exposed repeatedly to vehicle/engine emissions. The assay is based on an increase in the frequency of micronucleated erythrocytes found in bone marrow from treated animals compared to that of control animals. The guideline for the MN assay is found in § 79.64.

(iii) *Sister Chromatid Exchange (SCE) Assay*. The SCE assay is an *in vivo* analysis which gives information on potential mutagenic and/or carcinogenic effects of exposure to vehicle/engine emissions. The assay detects the ability of a chemical to enhance the exchange of DNA between two sister chromatids of a duplicating chromosome. This assay uses peripheral blood lymphocytes isolated from an exposed rodent test species and grown to confluence in cell culture. The guideline for the SCE assay is found in § 79.65.

(iv) *Neurotoxicity (NTX) measures*. NTX measures include (A) histopathology of specified central and peripheral nervous system tissues taken from emission-exposed rodents, and (B) an assay of brain tissue levels of glial fibrillary acidic protein (GFAP), a major filament protein of astrocytes, from emission-exposed rodents. The guidelines for the neurohistopathology and GFAP studies are found in § 79.66 and § 79.67, respectively.

(b) *Definitions*. For the purposes of this section, the following definitions apply:

No-observed-adverse-effect-level (NOAEL) means the maximum concentration used in a test which produces no observed adverse effects. A NOAEL is expressed in terms of weight or volume of test substance given daily per unit volume of air (μg/L or ppm).

Subchronic inhalation toxicity means the adverse effects occurring as a result of the continuous or repeated daily exposure of experimental animals to a chemical by inhalation for part (approximately 10 percent) of a life span.

(c) *Principle of the test method.* As long as none of the requirements of any study are violated by the combination, one or more HEAs may be combined with the general toxicity study through concurrent exposures of their study populations and/or by sharing the analysis of the same animal subjects. Requirements duplicated in combined studies need not be repeated. Guidelines for combining HEAs with the general toxicity study are as follows.

(1) *Fertility assessment.* (i) The number of study animals in the test population is increased when the fertility assessment is run concurrently with the 90-day toxicity study. A minimum of 40 females per test group shall undergo vaginal lavage daily for two weeks before the start of the exposure period. The resulting wet smears are examined to cull those animals which are acyclic. Twenty-five females shall be randomly assigned to a for-breeding group with the balance of females assigned to a group for histopathologic examination.

(ii) All test groups are exposed over a period of 90 days to various concentrations of the test atmosphere for a minimum of six hours per day. After seven weeks of exposures, analysis of vaginal cell smears shall resume on a daily basis for the 25 for-breeding females and shall continue for a period of four weeks or until each female in the group is confirmed pregnant. Following the ninth week of exposures, each for-breeding female is housed overnight with a single study male. Matings shall continue for as long as two weeks, or until pregnancy is confirmed (pregnancy day 0). Pregnant females are only exposed through day 15 of their pregnancy while daily exposures continue throughout the course of the study for non-pregnant females and study males.

(iii) On pregnancy day 20, pregnant females are sacrificed and their uteri are examined. Pregnancy status and fetal effects are recorded as described in § 79.63. At the end of the exposure period, all males and non-pregnant females are sacrificed and necropsied. Testes and epididymal tissue samples are taken from five perfusion-fixed test subjects and histopathological examinations are carried out on the remainder of the non-pregnant females and study males.

(2) *Carcinogenicity/mutagenicity(C/M) assessment.* When combined with the subchronic toxicity study, the main study population is used to perform both the *in vivo* MN and SCE assays. Because of the constant turnover of the cells to be analyzed in these assays, a separate study population may be used for this assessment. A study population needs only to be exposed a minimum of four weeks. At exposure's end, ten animals per exposure and control groups are anaesthetized and heart punctures are performed on all members. After separating blood components, individual lymphocyte cell cultures are set up for SCE analysis. One femur from each study subject is also removed and the marrow extracted. The marrow is smeared onto a glass slide, and stained for analysis of micronuclei in erythrocytes.

(3) *Neurotoxicity (NTX) measures.* (i) When combined with this subchronic toxicity study, test animals designated for whole-body perfusion fixation/lung histology and exposed as part of the main animal population are used to perform the neurohistology portion of these measures. After the last exposure period, a minimum of ten animals from each exposure group shall be preserved *in situ* with fixative. Sections of brain, spinal cord, and proximal sciatic or tibial nerve are then cut, processed further in formalin, and mounted for viewing under a light microscope. Fibers from the sciatic or tibial nerve sample are teased apart for further analysis under the microscope.

(ii) *GFAP assay.* After the last exposure period, a minimum of ten rodents

from each exposure group shall be sacrificed, and their brains excised and divided into regions. The tissue samples are then applied to filter paper, washed with anti-GFAP antibody, and visualized with a radio-labelled Protein A. The filters are quantified for degree of immunoreactivity between the antibody and GFAP in the tissue samples. A non-radioactive ELISA format is also referenced in the GFAP guideline cited in paragraph (a)(2)(iv) of this section. Note: Because the GFAP assay requires fresh, *i.e.*, non-preserved, brain tissue, the number of test animals may need to be increased to provide an adequate number of test subjects to complete the histopathology requirements of both the GFAP and the general toxicity portion of the 90-day inhalation study.

(iii) The start of the exposure period for the NTX measures study population may be staggered from that of the main study group to more evenly distribute the analytical work required in both study populations. The exposures would remain the same in all other respects.

(d) *Test procedures*—(1) *Animal selection*—(i) *Species and sex*. The rat is the recommended species. If another rodent species is used, the tester shall provide justification for its selection. Both sexes shall be used in any assessment unless it is demonstrated that one sex is refractory to the effects of exposure.

(ii) *Age and number*. Rats shall be at least ten weeks of age at the beginning of the study exposure. The number of animals necessary for individual health effect outcomes is as follows:

(A) Thirty rodents per concentration level/group, fifteen of each sex, shall be used to satisfy the reporting requirements of the 90-day toxicity study. Ten animals per concentration level/group shall be designated for whole body perfusion with fixative (by gravity) for lung studies, and neurohistology and testes studies, as appropriate.

(B) Thirty-five rodents, 25 females and ten males, shall be added for each test concentration or control group when combining a 90-day toxicity study with a fertility assessment.

(C) The tester shall provide a group of 10 animals (five animals per sex per experimental/control groups) in addition to the main test population when performing the GFAP neurotoxicity HEA.

(2) *Recovery group*. The manufacturer shall include a group of 20 animals (10 animals per sex) in the test population, exposing them to the highest concentration level for the entire length of the study's exposure period. This group shall then be observed for reversibility, persistence, or delayed occurrence of toxic effects during a post-exposure period of not less than 28 days.

(3) *Inhalation exposure*. (i) All data developed within this study shall be in accordance with good laboratory practice provisions under § 79.60.

(ii) The general conduct of this study shall be in accordance with the vehicle emissions inhalation exposure guideline in § 79.61.

(4) *Observation of animals*. (i) All toxicological (e.g., weight loss) and neurological signs (e.g., motor disturbance) shall be recorded frequently enough to observe any abnormality, and not less than weekly for all study animals. Animals shall be weighed weekly.

(ii) The following is a minimal list of measures that shall be noted:

(A) Body weight;

(B) Subject's reactivity to general stimuli such as removal from the cage or handling;

(C) Description, incidence, and severity of any convulsions, tremors, or abnormal motor movements in the home cage;

(D) Descriptions and incidence of posture and gait abnormalities observed in the home cage;

(E) Description and incidence of any unusual or abnormal behaviors, excessive or repetitive actions (stereotypies), emaciation, dehydration, hypotonia or hypertonia, altered fur appearance, red or crusty deposits around the eyes, nose, or mouth, and any other observations that may facilitate interpretation of the data.

(iii) Any animal which dies during the test is necropsied as soon as possible after discovery.

(5) *Clinical examinations*. (i) The following examinations shall be performed on the twenty animals designated as the 90-day study population, exclusive of pregnant dams and those

study animals targeted for perfusion by gravity:

(A) The following hematology determinations shall be carried out at least two times during the test period (after 30 days of exposure and just prior to terminal sacrifice at the end of the exposure period): hematocrit, hemoglobin concentration, erythrocyte count, total and differential leukocyte count, and a measure of clotting potential such as prothrombin time, thromboplastin time, or platelet count.

(B) Clinical biochemistry determinations on blood shall be carried out at least two times during the test period, after 30 days of exposure and just prior to terminal sacrifice at the end of the exposure period, on all groups of animals including concurrent controls. Clinical biochemical testing shall include assessment of electrolyte balance, carbohydrate metabolism, and liver and kidney function. The selection of specific tests will be influenced by observations on the mode of action of the substance. In the absence of more specific tests, the following determinations may be made: calcium, phosphorus, chloride, sodium, potassium, fasting glucose (with period of fasting appropriate to the species), serum alanine aminotransferase, serum aspartate aminotransferase, sorbitol dehydrogenase, gamma glutamyl transpeptidase, urea nitrogen, albumen, blood creatinine, methemoglobin, bile acids, total bilirubin, and total serum protein measurements. Additional clinical biochemistry shall be employed, where necessary, to extend the investigation of observed effects, e.g., analyses of lipids, hormones, acid/base balance, and cholinesterase activity.

(ii) The following examinations shall initially be performed on the high concentration and control groups only:

(A) Ophthalmological examination, using an ophthalmoscope or equivalent suitable equipment, shall be made prior to exposure to the test substance and at the termination of the study. If changes in the eyes are detected, all animals shall be examined.

(B) Urinalysis is not required on a routine basis, but shall be done when there is an indication based on expected and/or observed toxicity.

(iii) Preservation by whole-body perfusion of fixative into the anaesthetized animal for lung histology of ten animals from the 90-day study population for each experimental and control group.

(6) *Gross pathology*. With the exception of the whole body perfusion-fixed test animals cited in paragraph (d)(1)(ii)(A) of this section, all rodents shall be subjected to a full gross necropsy which includes examination of the external surface of the body, all orifices and the cranial, thoracic, and abdominal cavities and their contents. Gross pathology shall be performed on the following organs and tissues:

(i) The liver, kidneys, lungs, adrenals, brain, and gonads, including uterus, ovaries, testes, epididymides, seminal vesicles (with coagulating glands), and prostate, constitute the group of target organs for histology and shall be weighed as soon as possible after dissection to avoid drying. In addition, for other than rodent test species, the thyroid with parathyroids, when present, shall also be weighed as soon as possible after dissection to avoid drying.

(ii) The following organs and tissues, or representative samples thereof, shall be preserved in a suitable medium for possible future histopathological examination: All gross lesions; lungs—which shall be removed intact, weighed, and treated with a suitable fixative to ensure that lung structure is maintained (perfusion with the fixative is considered to be an effective procedure); nasopharyngeal tissues; brain—including sections of medulla/pons, cerebellar cortex, and cerebral cortex; pituitary; thyroid/parathyroid; thymus; trachea; heart; sternum with bone marrow; salivary glands; liver; spleen; kidneys; adrenals; pancreas; reproductive organs: uterus; cervix; ovaries; vagina; testes; epididymides; prostate; and, if present, seminal vesicles; aorta; (skin); gall bladder (if present); esophagus; stomach; duodenum; jejunum; ileum; cecum; colon; rectum; urinary bladder; representative lymph node; (mammary gland); (thigh musculature); peripheral nerve/tissue; (eyes); (femur—including articular surface); (spinal cord at three

levels—cervical, midthoracic, and lumbar); and (zymbal and exorbital lachrymal glands).

(7) *Histopathology*. Histopathology shall be performed on the following organs and tissues from all rodents:

(i) All gross lesions.

(ii) Respiratory tract and other organs and tissues, listed in paragraph (d)(6)(ii) of this section (except organs/tissues in parentheses), of all animals in the control and high dose groups.

(iii) The tissues mentioned in parentheses, listed in paragraph (d)(6)(ii) of this section, if indicated by signs of toxicity or target organ involvement.

(iv) Lungs of animals in the low and intermediate dose groups shall also be subjected to histopathological examination, primarily for evidence of infection since this provides a convenient assessment of the state of health of the animals.

(v) Lungs and trachea of the whole-body perfusion-fixed test animals cited in paragraph (d)(1)(ii)(A) of this section are examined for inhaled particle distribution.

(e) Interpretation of results. All observed results, quantitative and incidental, shall be evaluated by an appropriate statistical method. The specific methods, including consideration of statistical power, shall be selected during the design of the study.

(f) *Test report*. In addition to the reporting requirements as specified under §§ 79.60 and 79.61(e), the following individual animal data information shall be reported:

(1) Date of death during the study or whether animals survived to termination.

(2) Date of observation of each abnormal sign and its subsequent course.

(3) Individual body weight data, and group average body weight data vs. time.

(4) Feed consumption data, when collected.

(5) Hematological tests employed and all results.

(6) Clinical biochemistry tests employed and all results.

(7) Necropsy findings.

(8) Type of stain/fixative and procedures used in preparing tissue samples.

(9) Detailed description of all histopathological findings.

(10) Statistical treatment of the study results, where appropriate.

(g) *References*. For additional background information on this test guideline, the following references should be consulted.

(1) 40 CFR 798.2450, Inhalation toxicity.

(2) 40 CFR 798.2675, Oral Toxicity with Satellite Reproduction and Fertility Study.

(3) General Statement of Work for the Conduct of Toxicity and Carcinogenicity Studies in Laboratory Animals (revised April, 1987/modifications through January, 1990) appendix G, National Toxicology Program—U.S. Dept. of Health and Human Services (Public Health Service), P.O. Box 12233, Research Triangle Park, NC 27709.

[59 FR 33093, June 27, 1994, as amended at 63 FR 63793, Nov. 17, 1998]

§ 79.63 Fertility assessment/teratology.

(a) *Purpose*. Fertility assessment/teratology is an *in vivo* study designed to provide information on potential health hazards to the fetus arising from the mother's repeated inhalation exposure to vehicle/engine emissions before and during her pregnancy. By including a mating of test animals, the study provides preliminary data on the effects of repeated vehicle/engine emissions exposure on gonadal function, conception, and fertility. Since this is a one-generation test that ends with examination of full-term fetuses, but not of live pups, it is not capable of determining effects on reproductive development which would only be detected in viable offspring of treated parents.

(b) *Definitions*. For the purposes of this section, the following definitions apply:

Developmental toxicity means the ability of an agent to induce *in utero* death, structural or functional abnormalities, or growth retardation after contact with the pregnant animal.

Estrous cycle means the periodic recurrence of the biological phases of the female reproductive system which prepare the animal for conception and the development of offspring. The phases of the estrous cycle for a particular animal can be characterized by the general condition of the cells present in

the vagina and the presence or absence of various cell types.

Vaginal cytology evaluation means the use of wet vaginal cell smears to determine the phase of a test animal's estrous cycle and the potential for adverse exposure effects on the regularity of the animal's cycle. In the rat, common cell types found in the smears correlate well with the various stages of the estrous cycle and to changes occurring in the reproductive tract.

(c) *Principle of the test method.* (1) For a two week period before exposures start, daily vaginal cell smears are examined from a surplus of female test animals to identify and cull those females which are acyclic. After culling, testers shall randomly assign at each exposure concentration (including unexposed) a minimum of twenty-five females for breeding and fifteen non-bred females for later histologic evaluation. Test animals shall be exposed by inhalation to graduated concentrations of the test atmosphere for a minimum of six hours per day over the next 13 weeks. Males and females in both test and control groups are mated after nine weeks of exposure. Exposures for pregnant females continue through gestation day 15, while exposures for males and all non-pregnant females shall continue for the full exposure period.

(2) Beginning two weeks before the start of the mating period, daily vaginal smears resume for all to-be-bred females to characterize their estrous cycles. This will continue for four weeks or until a rat's pregnancy is confirmed, *i.e.*, day 0, by the presence of sperm in the cell smear. On pregnancy day 20, shortly before the expected date of delivery, each pregnant female is sacrificed, her uterus removed, and the contents examined for embryonic or fetal deaths, and live fetuses. At the end of the exposure period, males and all non-pregnant females shall be weighed, and various organs and tissues, as appropriate, shall be removed and weighed, fixed with stain, and sectioned for viewing under a light microscope.

(3) This assay may be done separately or in combination with the subchronic toxicity study, pursuant to the provisions in § 79.62.

(d) *Limit test.* If a test at one dose level of the highest concentration that can be achieved while maintaining a particle size distribution with a mass median aerodynamic diameter (MMAD) of 4 micrometers (μm) or less, using the procedures described in section 79.60 of this part produces no observable toxic effects and if toxicity would not be expected based upon data of structurally related compounds, then a full study using three dose levels might not be necessary. Expected human exposure though may indicate the need for a higher dose level.

(e) *Test procedures*—(1) *Animal selection*—(i) *Species and strain.* The rat is the preferred species. Strains with low fecundity shall not be used and the candidate species shall be characterized for its sensitivity to developmental toxins. If another rodent species is used, the tester shall provide justification for its selection.

(ii) Animals shall be a minimum of 10 weeks old at the start of the exposure period.

(iii) *Number and sex.* Each test and control group shall have a minimum of 25 males and 40 females. In order to ensure that sufficient pups are produced to permit meaningful evaluation of the potential developmental toxicity of the test substance, twenty pregnant test animals are required for each exposure and control level.

(2) *Observation period.* The observation period shall be 13 weeks, at a minimum.

(3) *Concentration levels and concentration selection.* (i) To select the appropriate concentration levels, a pilot or trial study may be advisable. Since pregnant animals have an increased minute ventilation as compared to non-pregnant animals, it is recommended that the trial study be conducted in pregnant animals. Similarly, since presumably the minute ventilation will vary with progression of pregnancy, the animals should be exposed during the same period of gestation as in the main study. It is not always necessary, though, to carry out a trial study in pregnant animals. Comparisons between the results of a trial study in non-pregnant animals, and the main study in pregnant animals will demonstrate whether or not the test

substance is more toxic in pregnant animals. In the trial study, the concentration producing embryonic or fetal lethalities or maternal toxicity should be determined.

(ii) The highest concentration level shall induce some overt maternal toxicity such as reduced body weight or body weight gain, but not more than 10 percent maternal deaths.

(iii) The lowest concentration level shall not produce any grossly observable evidence of either maternal or developmental toxicity.

(4) *Inhalation exposure.* (i) All data developed within this study shall be in accordance with good laboratory practice provisions under § 79.60.

(ii) The general conduct of this study shall be in accordance with the vehicle emissions inhalation exposure guideline in § 79.61.

(iii) Pregnant females shall be exposed to the test atmosphere on each and every day between (and including) the first and fifteenth day of gestation.

(f) *Test performance*—(1) *Study conduct.* Directions specific to this study are:

(i) The duration of exposure shall be at least six hours daily, allowing appropriate additional time for chamber equilibrium.

(ii) Where an exposure chamber is used, its design shall minimize crowding of the test animals. This is best accomplished by individual caging.

(iii) Pregnant animals shall not be subjected to beyond the minimum amount of stress. Since whole-body exposure appears to be the least stressful mode of exposure, it is the preferred method. In general oronasal or head-only exposure, which is sometimes used to avoid concurrent exposure by the dermal or oral routes, is not recommended because of the associated stress accompanying the restraining of the animals. However, there may be specific instances where it may be more appropriate than whole-body exposure. The tester shall provide justification/reasoning for its selection.

(iv) Measurements shall be made at least every other day of food consumption for all animals in the study. Males and females shall be weighed on the first day of exposure and 2–3 times per week thereafter, except for pregnant dams.

(v) The test animal housing, mating, and exposure chambers shall be operated on a twenty-four hour lighting schedule, with twelve hours of light and twelve hours of darkness. Test animal exposure shall only occur during the light portion of the cycle.

(vi) Signs of toxicity shall be recorded as they are observed including the time of onset, degree, and duration.

(vii) Females showing signs of abortion or premature delivery shall be sacrificed and subjected to a thorough macroscopic examination.

(viii) Animals that die or are euthanized because of morbidity will be necropsied promptly.

(2) *Vaginal cytology.* (i) For a two week period before the mating period starts, each female in the to-be-bred population shall undergo a daily saline vaginal lavage. Two wet cell smears from this lavage shall be examined daily for each subject to determine a baseline pattern of estrus. Testers shall avoid excessive handling and roughness in obtaining the vaginal cell samples, as this may induce a condition of pseudo-pregnancy in the test animals.

(ii) This will continue for four weeks or until day 0 of a rat's pregnancy is confirmed by the presence of sperm in the cell smear.

(3) *Mating and fertility assessment.* (i) Beginning nine weeks after the start of exposure, each exposed and control group female (exclusive of the histology group females) shall be paired during non-exposure hours with a male from the same exposure concentration group. Matings shall continue for a period of two weeks, or until all mated females are determined to be pregnant. Mating pairs shall be clearly identified.

(ii) Each morning, including weekends, cages shall be examined for the presence of a sperm plug. When found, this shall mark gestation day 0 and pregnancy shall be confirmed by the presence of sperm in the day's wet vaginal cell smears.

(iii) Two weeks after mating is begun, or as females are determined to be pregnant, bred animals are returned to pre-mating housing. Daily exposures continues through gestation day 15 for all pregnant females or through the

balance of the exposure period for nonpregnant females and all males.

(iv) Those pairs which fail to mate shall be evaluated in the course of the study to determine the cause of the apparent infertility. This may involve such procedures as additional opportunities to mate with a proven fertile partner, histological examination of the reproductive organs, and, in males, examination of the spermatogenic cycles. The stage of estrus for each nonpregnant female in the breeding group will be determined at the end of the exposure period.

(4) All animals in the histology group shall be subject to histopathologic examination at the end of the study's exposure period.

(g) *Treatment of results.* (1) All observed results, quantitative and incidental, shall be evaluated by an appropriate statistical method. The specific methods, including consideration of statistical power, shall be selected during the design of the study.

(2) Data and reporting. In addition to the reporting requirements specified under §§ 79.60 and 79.61, the final test report must include the following information:

(i) *Gross necropsy.* (A) All animals shall be subjected to a full necropsy which includes examination of the external surface of the body, all orifices, and the cranial, thoracic, and abdominal cavities and their contents. Special attention shall be directed to the organs of the reproductive system.

(B) The liver, kidneys, adrenals, pituitary, uterus, vagina, ovaries, testes, epididymides and seminal vesicles (with coagulating glands), and prostate shall be weighed wet, as soon as possible after dissection, to avoid drying.

(*i*) At the time of sacrifice on gestation day 20 or at death during the study, each dam shall be examined macroscopically for any structural abnormalities or pathological changes which may have influenced the pregnancy.

(*ii*) The contents of the uterus shall be examined for embryonic or fetal deaths and the number of viable fetuses. Gravid uterine weights need not be obtained from dead animals where decomposition has occurred. The degree of resorption shall be described in order to help estimate the relative time of death.

(*iii*) The number of corpora lutea shall be determined in each pregnant dam.

(*iv*) Each fetus shall be weighed, all weights recorded, and mean fetal weights determined.

(*v*) Each fetus shall be examined externally and the sex determined.

(*vi*) One-half of the rat fetuses in each litter shall be examined for skeletal anomalies, and the remaining half shall be examined for soft tissue anomalies, using appropriate methods.

(ii) *Histopathology.* (A) Histopathology on vagina, uterus, ovaries, testes, epididymides, seminal vesicles, and prostate as appropriate for all males and histology group females in the control and high concentration groups and for all animals that died or were euthanized during the study. If abnormalities or equivocal results are seen in any of these organs/tissues, the same organ/tissue from test animals in lower concentration groups shall be examined.

NOTE: Testes, seminal vesicles, epididymides, and ovaries, at a minimum, shall be examined in perfusion-fixed (pressure or gravity method) test subjects, when available.

(B) All gross lesions in all study animals shall be examined.

(C) As noted under mating procedures, reproductive organs of animals suspected of infertility shall be subject to microscopic examination.

(D) The following organs and tissues, or representative samples thereof, shall be preserved in a suitable medium for future histopathological examination: all gross lesions; vagina; uterus; ovaries; testes; epididymides; seminal vesicles; prostate; liver; and kidneys/adrenals.

(3) *Evaluation of results.* (i) The findings of a developmental toxicity study shall be evaluated in terms of the observed effects and the exposure levels producing effects. It is necessary to consider the historical developmental toxicity data on the species/strain tested.

(ii) There are several criteria for determining a positive result for reproductive/teratologic effects; a statistically significant dose-related decrease in the weight of the testes for treated subjects over control subjects, a decrease in neonatal viability, a significant change in the presence of soft tissue or skeletal abnormalities, or an increased rate of embryonic or fetal resorption or death. Other criteria, e.g., lengthening of the estrous cycle or the time spent in any one stage of estrus, changes in the proportion of viable male vs female fetuses or offspring, the number and type of cells in vaginal smears, or pathologic changes found during gross or microscopic examination of male or female reproductive organs may be based upon detection of a reproducible and statistically significant positive response for that evaluation parameter. A positive result indicates that, under the test conditions, the test substance does induce reproductive organ or fetal toxicity in the test species.

(iii) A test substance which does not produce either a statistically significant dose-related change in the reproductive organs or cycle or a statistically significant and reproducible positive response at any one of the test points may not induce reproductive organ toxicity in this test species, but further investigation , e.g., to establish absorption and bioavailability of the test substance, should be considered.

(h) *Test report.* In addition to the reporting requirements as specified under 40 CFR 79.60 and the vehicle emissions inhalation toxicity guideline as published in 40 CFR 79.61, the following specific information shall be reported:

(1) *Individual animal data.* (i) Time of death during the study or whether animals survived to termination.

(ii) Date of onset and duration of each abnormal sign and its subsequent course.

(iii) Feed and body weight data.

(iv) Necropsy findings.

(v) Male test subjects.

(A) Testicle weight, and body weight: testicle weight ratio.

(B) Detailed description of all histopathological findings, especially for the testes and the epididymides.

(vi) Female test subjects.

(A) Uterine weight data.

(B) Beginning and ending collection dates for vaginal cell smears.

(C) Estrous cycle length compared within and between groups including mean cycle length for groups.

(D) Percentage of time spent in each stage of cycle.

(E) Stage of estrus at time of mating/sacrifice and proportion of females in estrus between concentration groups.

(F) Detailed description of all histopathological findings, especially for uterine/ovary samples.

(vii) Pregnancy and litter data. Toxic response data by exposure level, including but not limited to, indices of fertility and time-to-mating, including the number of days until mating and the number of full or partial estrous cycles until mating.

(A) Number of pregnant animals,

(B) Number and percentage of live fetuses, resorptions.

(viii) *Fetal data.* (A) Numbers of each sex.

(B) Number of fetuses with any soft tissue or skeletal abnormalities.

(2) Type of stain/fixative and procedures used in preparing tissue samples.

(3) Statistical treatment of the study results.

(i) *References.* For additional background information on this test guideline, the following references should be consulted.

(1) 40 CFR 798.2675, Oral Toxicity with Satellite Reproduction and Fertility Study.

(2) 40 CFR 798.4350, Inhalation Developmental Toxicity Study.

(3) Chapin, R.E. and J.J. Heindel (1993) Methods in Toxicology, Vol. 3, Parts A and B: Reproductive Toxicology, Academic Press, Orlando, FL.

(4) Gray, L.E., et al. (1989) ''A Dose-Response Analysis of Methoxychlor-Induced Alterations of Reproductive Development and Function in the Rat'' Fund. App. Tox. 12, 92–108.

(5) Leblond, C.P. and Y. Clermont (1952) ''Definition of the Stages of the Cycle of the Seminiferous Epithelium of the Rat.'' Ann. N. Y. Acad. Sci. 55:548–73.

(6) Morrissey, R.E., et al. (1988) ''Evaluation of Rodent Sperm, Vaginal Cytology, and Reproductive Organ Weight Data from National Toxicology

Program 13-week Studies.'' Fundam. Appl. Toxicol. 11:343–358.

(7) Russell, L.D., Ettlin, R.A., Sinhattikim, A.P., and Clegg, E.D (1990) Histological and Histopathological Evaluation of the Testes, Cache River Press, Clearwater, FL.

[59 FR 33093, June 27, 1994, as amended at 61 FR 36513, July 11, 1996]

§ 79.64 *In vivo* micronucleus assay.

(a) *Purpose*. The micronucleus assay is an *in vivo* cytogenetic test which uses erythrocytes in the bone marrow of rodents to detect chemical damage to the chromosomes or mitotic apparatus of mammalian cells. As the erythroblast develops into an erythrocyte (red blood cell), its main nucleus is extruded and may leave a micronucleus in the cell body; a few micronuclei form under normal conditions in blood elements. This assay is based on an increase in the frequency of micronucleated erythrocytes found in bone marrow from treated animals compared to that of control animals. The visualization of micronuclei is facilitated in these cells because they lack a main nucleus.

(b) *Definitions*. For the purposes of this section the following definitions apply:

Micronuclei mean small particles consisting of acentric fragments of chromosomes or entire chromosomes, which lag behind at anaphase of cell division. After telophase, these fragments may not be included in the nuclei of daughter cells and form single or multiple micronuclei in the cytoplasm.

Polychromatic erythrocyte (PCE) means an immature red blood cell that, because it contains RNA, can be differentiated by appropriate staining techniques from a normochromatic erythrocyte (NCE), which lacks RNA. In one to two days, a PCE matures into a NCE.

(c) *Test method*—(1) *Principle of the test method*. (i) Groups of rodents are exposed by the inhalation route for a minimum of 6 hours/day over a period of not less than 28 days to three or more concentrations of a test substance in air. Groups of animals are sacrificed at the end of the exposure period and femoral bone marrow is extracted. The bone marrow is then smeared onto glass slides, stained, and PCEs are scored for micronuclei. Researchers may need to run a trial at the highest tolerated concentration of the test atmosphere to optimize the sample collection time for micronucleated cells.

(ii) This assay may be done separately or in combination with the subchronic toxicity study, pursuant to the provisions in § 79.62.

(2) *Species and strain*. (i) The rat is the recommended test animal. Other rodent species may be used in this assay, but use of that species will be justified by the tester.

(ii) If a strain of mouse is used in this assay, the tester shall sample peripheral blood from an appropriate site on the test animal, e.g., the tail vein, as a source of normochromatic erythrocytes. Results shall be reported as outlined later in this guideline with ''normochromatic'' interchanged for ''polychromatic'', where specified.

(3) *Animal number and sex*. At least five female and five male animals per experimental/sample and control group shall be used. The use of a single sex or a smaller number of animals shall be justified.

(4) *Positive control group*. A single concentration of a compound known to produce micronuclei *in vivo* is adequate as a positive control if it shows a significant response at any one time point; additional concentration levels may be used. To select an appropriate concentration level, a pilot or trial study may be advisable. Initially, one concentration of the test substance may be used, the maximum tolerated dose or that producing some indication of toxicity, e.g., a drop in the ratio of polychromatic to normochromatic erythrocytes. Intraperitoneal injection of 1,2-dimethyl-benz-anthracene or benzene are examples of positive control exposures. A concentration of 50–80 percent of an LD50 may be a suitable guide.

(d) *Test performance*—(1) *Inhalation exposure*. (i) All data developed within this study shall be in accordance with good laboratory practice provisions under § 79.60.

(ii) The general conduct of this study shall be in accordance with the vehicle emissions inhalation exposure guideline in § 79.61.

(2) *Preparation of slides and sampling times.* Within twenty-four hours of the last exposure, test animals will be sacrificed. One femur from each test animal will be removed and placed in fetal bovine serum. The bone marrow is removed, cells processed, and two bone marrow smears are made for each animal on glass microscope slides. The slides are stained with acridine- orange (AO) or another appropriate stain (Giemsa + Wright's, etc.) and examined under a microscope.

(3) *Analysis.* Slides shall be coded for study before microscopic analysis. At least 1,000 first-division erythrocytes per animal shall be scored for the incidence of micronuclei. Sexes will be analyzed separately.

(e) *Data and report*—(1) *Treatment of results.* In addition to the reporting requirements specified under §§ 79.60 and 79.61, the final test report must include the criteria for scoring micronuclei. Individual data shall be presented in a tabular form including both positive and negative controls and experimental groups. The number of polychromatic erythrocytes scored, the number of micronucleated erythrocytes, the percentage of micronucleated cells, and, where applicable, the percentage of micronucleated erythrocytes shall be listed separately for each experimental and control animal. Absolute numbers shall be included if percentages are reported.

(2) *Interpretation of data.* (i) There are several criteria for determining a positive response, one of which is a statistically significant dose-related increase in the number of micronucleated polychromatic erythrocytes. Another criterion may be based upon detection of a reproducible and statistically significant positive response for at least one of the test substance concentrations.

(ii) A test substance which does not produce either a statistically significant dose-related increase in the number of micronucleated polychromatic erythrocytes or a statistically significant and reproducible positive response at any one of the test points is considered nonmutagenic in this system.

(3) *Test evaluation.* (i) Positive results in the micronucleus test provide information on the ability of a chemical to induce micronuclei in erythrocytes of the test species under the conditions of the test. This damage may have been the result of chromosomal damage or damage to the mitotic apparatus.

(ii) Negative results indicate that under the test conditions the test substance does not produce micronuclei in the bone marrow of the test species.

(f) *Test report.* In addition to the reporting recommendations as specified under § 79.60, the following specific information shall be reported:

(1) Test atmosphere concentration(s) used and rationale for concentration selection.

(2) Rationale for and description of treatment and sampling schedules, toxicity data, negative and positive controls.

(3) Historical control data (negative and positive), if available.

(4) Details of the protocol used for slide preparation.

(5) Criteria for identifying micronucleated erythrocytes.

(6) Micronucleus analysis by animal and by group for each concentration (sexes analyzed separately).

(i) Ratio of polychromatic to normochromatic erythrocytes.

(ii) Number of polychromatic erythrocytes with micronuclei.

(iii) Number of polychromatic erythrocytes scored.

(7) Statistical methodology chosen for test analysis.

(g) *References.* For additional background information on this test guideline, the following references should be consulted.

(1) 40 CFR 798.5395, *In Vivo*, Mammalian Bone Marrow Cytogenetics Tests: Micronucleus Assay.

(2) Cihak, R. ''Evaluation of Benzidine by the Micronucleus Test.'' Mutation Research, 67: 383–384 (1979).

(3) Evans, H.J. ''Cytological Methods for Detecting Chemical Mutagens.'' Chemical Mutagens: Principles and Methods for Their Detection, Vol. 4. Ed. A. Hollaender (New York and London: Plenum Press, 1976) pp. 1–29.

(4) Heddle, J.A., *et al.* ''The Induction of Micronuclei as a Measure of Genotoxicity. A Report of the U.S. Environmental Protection Agency Gene-Tox Program.'' Mutation Research, 123:61–118 (1983).

(5) Preston, J.R. *et al.* ''Mammalian *In Vivo* and *In Vitro* Cytogenetics Assays: Report of the Gene-Tox Program.'' Mutation Research, 87:143–188 (1981).

(6) Schmid, W. ''The micronucleus test for cytogenetic analysis'', Chemical Mutagens, Principles and Methods for their Detection. Vol. 4 Hollaender A, (Ed. A ed. (New York and London: Plenum Press, (1976) pp. 31–53.

(7) Tice, R.E., and Al Pellom ''User's guide: Micronucleus assay data management and analysis system'', NTIS Order no. PB–90–212–598AS.

§ 79.65 *In vivo* sister chromatid exchange assay.

(a) *Purpose.* The *in vivo* sister chromatid exchange (SCE) assay detects the ability of a chemical to enhance the exchange of DNA between two sister chromatids of a duplicating chromosome. The most commonly used assays employ mammalian bone marrow cells or peripheral blood lymphocytes, often from rodent species.

(b) *Definitions.* For the purposes of this section, the following definitions apply:

C-metaphase means a state of arrested cell growth typically seen after treatment with a spindle inhibitor, *i.e.*, colchicine.

Sister chromatid exchange means a reciprocal interchange of the two chromatid arms within a single chromosome. This exchange is visualized during the metaphase portion of the cell cycle and presumably requires the enzymatic incision, translocation and ligation of at least two DNA helices.

(c) *Test method*—(1) *Principle of the test method.* (i) Groups of rodents are exposed by the inhalation route for a minimum of 6 hours/day over a period of not less than 28 days to three or more concentrations of a test substance in air. Groups of animals are sacrificed at the end of the exposure period and blood lymphocyte cell cultures are prepared from study animals. Cell growth is suspended after a time and cells are harvested, fixed and stained before scoring for SCEs. Researchers may need to run a trial at the highest tolerated concentration of the test atmosphere to optimize the sample collection time for second division metaphase cells.

(ii) This assay may be done separately or in combination with the subchronic toxicity study, pursuant to the provisions in § 79.62.

(2) *Description.* (i) The method described here employs peripheral blood lymphocytes (PBL) of laboratory rodents exposed to the test atmosphere.

(ii) Within twenty-four hours of the last exposure, test animal lymphocytes are obtained by heart puncture and duplicate cell cultures are started for each animal. Cultures are grown in bromo-deoxyuridine (BrdU), and then a spindle inhibitor (e.g., colchicine) is added to arrest cell growth. Cells are harvested, fixed, and stained and their chromosomes are scored for SCEs.

(3) *Species and strain.* The rat is the recommended test animal. Other rodent species may be used in this assay, but use of that species will be justified by the tester.

(4) *Animal number and sex.* At least five female and five male animals per experimental and control group shall be used. The use of a single sex or different number of animals shall be justified.

(5) *Positive control group.* A single concentration of a compound known to produce SCEs *in vivo* is adequate as a positive control if it shows a significant response at any one time point; additional concentration levels may be used. To select an appropriate concentration level, a pilot or trial study may be advisable. Initially, one concentration of the test substance may be used, the maximum tolerated dose or that producing some indication of toxicity as evidenced by animal morbidity (including death) or target cell toxicity. Intraperitoneal injection of 1,2-dimethyl-benz-anthracene or benzene are examples of positive control exposures. A concentration of 50–80 percent of an LD50 would also be a suitable guide.

(6) *Inhalation exposure.* (i) All data developed within this study shall be in

accordance with good laboratory practice provisions under § 79.60.

(ii) The general conduct of this study shall be in accordance with the vehicle emissions inhalation exposure guideline in § 79.61.

(d) *Test performance*—(1) *Treatment*. At the conclusion of the exposure period, all test animals are anaesthetized and heart punctures are performed. Lymphocytes are isolated over a Ficoll gradient and replicate cell cultures are started for each animal. After some 21 hours, the cells are treated with BrdU and returned to incubation. The following day, a spindle inhibitor (e.g., colchicine) is added to arrest cell growth in c-metaphase. Cells are harvested 4 hours later and second-division metaphase cells are washed and fixed in methanol:acetic acid, stained, and chromosome preparations are scored for SCEs.

(2) *Staining method*. Staining of slides to reveal SCEs can be performed according to any of several protocols. However, the fluorescence plus Giemsa method is recommended.

(3) *Number of cells scored*. (i) A minimum of 25 well-stained, second-division metaphase cells shall be scored for each animal for each cell type.

(ii) At least 100 consecutive metaphase cells shall be scored for the number of first, second, and third division metaphases for each animal for each cell type.

(iii) At least 1000 consecutive PBL's shall be scored for the number of metaphase cells present.

(iv) The number of cells to be analyzed per animal shall be based upon the number of animals used, the negative control frequency, the pre-determined sensitivity and the power chosen for the test. Slides shall be coded before microscopic analysis.

(e) *Data and report*—(1) *Treatment of results*. In addition to the reporting requirements specified under §§ 79.60 and 61, data shall be presented in tabular form, providing scores for both the number of SCE for each metaphase. Differences among animals within each group shall be considered before making comparisons between treated and control groups.

(2) *Statistical evaluation*. Data shall be evaluated by appropriate statistical methods.

(3) *Interpretation of results*. (i) There are several criteria for determining a positive result, one of which is a statistically significant dose-related increase in the number of SCE. Another criterion may be based upon detection of a reproducible and statistically significant positive response for at least one of the test concentrations.

(ii) A test substance which does not produce either a statistically significant dose-related increase in the number of SCE or a statistically significant and reproducible positive response at any one of the test concentrations is considered not to induce rearrangements of DNA segments in this system.

(iii) Both biological and statistical significance shall be considered together in the evaluation.

(4) *Test evaluation*. (i) A positive result in the *in vivo* SCE assay for either, or both, the lung or lymphocyte cultures indicates that under the test conditions the test substance induces reciprocal interchanges of DNA in duplicating chromosomes from lung or lymphocyte cells of the test species.

(ii) Negative results indicate that under the test conditions the test substance does not induce reciprocal interchanges in lung or lymphocyte cells of the test species.

(5) *Test report*. In addition to the reporting recommendations as specified under §§ 79.60 and 79.61, the following specific information shall be reported:

(i) Test concentrations used, rationale for concentration selection, negative and positive controls;

(ii) Toxic response data by concentration;

(iii) Schedule of administration of test atmosphere, BrdU, and spindle inhibitor;

(iv) Time of harvest after administration of BrdU;

(v) Identity of spindle inhibitor, its concentration and timing of treatment;

(vi) Details of the protocol used for cell culture and slide preparation;

(vii) Criteria for scoring SCE;

(viii) Replicative index, *i.e.*, [percent 1st division+(2×percent 2nd division) + (3×percent 3rd division) metaphases]/100; and

(ix) Mitotic activity, *i.e.*, # of metaphases/1000 cells.

(f) *References*. For additional background information on this test guideline, the following references should be consulted.

(1) 40 CFR 798.5915, *In vivo* Sister Chromatid Exchange Assay.

(2) Kato, H. ''Spontaneous Sister Chromatid Exchanges Detected by a BudR-Labeling Method.'' Nature, 251:70–72 (1974).

(4) Kligerman, A. D., *et al*. ''Sister Chromatid Exchange Analysis in Lung and Peripheral Blood Lymphocytes of Mice Exposed to Methyl Isocyanate by Inhalation.'' Environmental Mutagenesis 9:29–36 (1987).

(5) Kligerman, A.D., *et al.*, ''Cytogenetic Studies of Rodents Exposed to Styrene by Inhalation'', IARC Monographs no. 127 ''Butadiene and Styrene: Assesment of Health Hazards'' (Sorsa, *et al*., eds), pp 217–224, 1993.

(6) Kligerman, A., *et al.*, ''Cytogenetic Studies of Mice Exposed to Styrene by Inhalation.'', Mutation Research, 280:35–43, 1992.

(7) Wolff, S., and P. Perry. ''Differential Giemsa Staining of Sister Chromatids and the Study of Sister Chromatid Exchanges Without Autoradiography.'' Chromosoma 48: 341–53 (1974).

§ 79.66 Neuropathology assessment.

(a) *Purpose*. (1) The histopathological and biochemical techniques in this guideline are designed to develop data in animals on morphologic changes in the nervous system associated with repeated inhalation exposures to motor vehicle emissions. These tests are not intended to provide a detailed evaluation of neurotoxicity. Neuropathological evaluation should be complemented by other neurotoxicity studies, e.g. behavioral and neurophysiological studies and/or general toxicity testing, to more completely assess the neurotoxic potential of an exposure.

(2) [Reserved]

(b) *Definition*. Neurotoxicity (NTX) or a neurotoxic effect is an adverse change in the structure or function of the nervous system following exposure to a chemical substance.

(c) *Principle of the test method*. (1) Laboratory rodents are exposed to one of several concentration levels of a test atmosphere for at least six hours daily over a period of 90 days. At the end of the exposure period, the animals are anaesthetized, perfused *in situ* with fixative, and tissues in the nervous system are examined grossly and prepared for microscopic examination. Starting with the highest dosage level, tissues are examined under the light microscope for morphologic changes, until a no-observed-adverse-effect level is determined. In cases where light microscopy has revealed neuropathology, the NOAEL may be confirmed by electron microscopy.

(2) The tests described herein may be combined with any other toxicity study, as long as none of the requirements of either are violated by the combination. Specifically, this assay may be combined with a subchronic toxicity study, pursuant to provisions in § 79.62.

(d) *Limit test*. If a test at one dose level of the highest concentration that can be achieved while maintaining a particle size distribution with a mass median aerodynamic diameter (MMAD) of 4 micrometers (μm) or less, using the procedures described in paragraph (a) of this section, produces no observable toxic effects and if toxicity would not be expected based upon data of structurally related compounds, then a full study using three dose levels might not be necessary. Expected human exposure though may indicate the need for a higher dose level.

(e) *Test procedures*—(1) *Animal selection*—(i) *Species and strain*. Testing shall be performed in the species being used in other NTX tests. A standard strain of laboratory rat is recommended. The choice of species shall take into consideration such factors as the comparative metabolism of the chemical and species sensitivity to the toxic effects of the test substance, as evidenced by the results of other studies, the potential for combined studies, and the availability of other toxicity data for the species.

(ii) *Age*. Animals shall be at least ten weeks of age at the start of exposure.

(iii) *Sex*. Both sexes shall be used unless it is demonstrated that one sex is refractory to the effects of exposure.

(2) *Number of Animals*. A minimum of ten animals per group shall be used. The tissues from each animal shall be examined separately.

(3) *Control Groups*. (i) A concurrent control group, exposed to clean, filtered air only, is required.

(ii) The laboratory performing the testing shall provide positive control data, e.g., results from repeated acrylamide exposure, as evidence of the ability of their histology procedures to detect neurotoxic endpoints. Positive control data shall be collected at the time of the test study unless the laboratory can demonstrate the adequacy of historical data for the planned study.

(iii) A satellite group of 10 female and 10 male test subjects shall be treated with the highest concentration level for the duration of the exposure and observed thereafter for reversibility, persistence, or delayed occurrence of toxic effects during a post-treatment period of not less than 28 days.

(4) *Inhalation exposure*. (i) All data developed within this study shall be in accordance with good laboratory practice provisions under § 79.60.

(ii) The general conduct of this study shall be in accordance with the vehicle emissions inhalation exposure guideline in § 79.61.

(5) *Study conduct*—(i) *Observation of animals*. All toxicological (e.g., weight loss) and neurological signs (e.g., motor disturbance) shall be recorded frequently enough to observe any abnormality, and not less than weekly.

(ii) The following is a minimal list of measures that shall be noted:

(A) Body weight;

(B) Subject's reactivity to general stimuli such as removal from the cage or handling;

(C) Description, incidence, and severity of any convulsions, tremors, or abnormal motor movements in the home cage;

(D) Descriptions and incidence of posture and gait abnormalities observed in the home cage; and

(E) Description and incidence of any unusual or abnormal behaviors, excessive or repetitive actions (stereotypies), emaciation, dehydration, hypotonia or hypertonia, altered fur appearance, red or crusty deposits around the eyes, nose, or mouth, and any other observations that may facilitate interpretation of the data.

(iii) *Sacrifice of animals*—(A) *General*. The goal of the techniques outlined for sacrifice of animals and preparation of tissues is preservation of tissue morphology to simulate the living state of the cell.

(B) *Perfusion technique*. Animals shall be perfused *in situ* by a generally recognized technique. For fixation suitable for light or electronic microscopy, saline solution followed by buffered 2.5 percent glutaraldehyde or buffered 4.0 percent paraformaldehyde, is recommended. While some minor modifications or variations in procedures are used in different laboratories, a detailed and standard procedure for vascular perfusion may be found in the text by Zeman and Innes (1963), Hayat (1970), and Spencer and Schaumburg (1980) under paragraph (g) of this section. A more sophisticated technique is described by Palay and Chan-Palay (1974) under paragraph (g) of this section. In addition, the lungs shall be instilled with fixative via the trachea during the fixation process in order to preserve the lungs and achieve whole-body fixation.

(C) *Removal of brain and cord*. After perfusion, the bony structure (cranium and vertebral column) shall be exposed. Animals shall then be stored in fixative-filled bags at 4 °C for 8–12 hours. The cranium and vertebral column shall be removed carefully by trained technicians without physical damage of the brain and cord. Detailed dissection procedures may be found in the text by Palay and Chan-Palay (1974) under paragraph (g) of this section. After removal, simple measurement of the size (length and width) and weight of the whole brain (cerebrum, cerebellum, pons-medulla) shall be made. Any abnormal coloration or discoloration of the brain and cord shall also be noted and recorded.

(D) *Sampling*. Cross-sections of the following areas shall be examined: The forebrain, the center of the cerebrum, the midbrain, the cerebellum, and the medulla oblongata; the spinal cord at

the cervical swelling (C_3–C_6), and proximal sciatic nerve (mid-thigh and sciatic notch) or tibial nerve (at knee). Other sites and tissue elements (e.g., gastrocnemius muscle) shall be examined if deemed necessary. Any observable gross changes shall be recorded.

(iv) *Specimen storage.* Tissue samples from both the central and peripheral nervous system shall be further immersion fixed and stored in appropriate fixative (e.g., 10 percent buffered formalin for light microscopy; 2.5 percent buffered gluteraldehyde or 4.0 percent buffered paraformaldehyde for electron microscopy) for future examination. The volume of fixative versus the volume of tissues in a specimen jar shall be no less than 25:1. All stored tissues shall be washed with buffer for at least 2 hours prior to further tissue processing.

(v) *Histopathology examination*—(A) *Fixation.* Tissue specimens stored in 10 percent buffered formalin may be used for this purpose. All tissues must be immersion fixed in fixative for at least 48 hours prior to further tissue processing.

(B) *Dehydration.* All tissue specimens shall be washed for at least 1 hour with water or buffer, prior to dehydration. (A longer washing time is needed if the specimens have been stored in fixative for a prolonged period of time.) Dehydration can be performed with increasing concentration of graded ethanols up to absolute alcohol.

(C) *Clearing and embedding.* After dehydration, tissue specimens shall be cleared with xylene and embedded in paraffin or paraplast. Multiple tissue specimens (e.g. brain, cord, ganglia) may be embedded together in one single block for sectioning. All tissue blocks shall be labelled showing at least the experiment number, animal number, and specimens embedded.

(D) *Sectioning.* Tissue sections, 5 to 6 microns in thickness, shall be prepared from the tissue blocks and mounted on standard glass slides. It is recommended that several additional sections be made from each block at this time for possible future needs for special stainings. All tissue blocks and slides shall be filed and stored in properly labeled files or boxes.

(E) *Histopathological techniques.* The following general testing sequence is proposed for gathering histopathological data:

(*1*) *General staining.* A general staining procedure shall be performed on all tissue specimens in the highest treatment group. Hematoxylin and eosin (H&E) shall be used for this purpose. The staining shall be differentiated properly to achieve bluish nuclei with pinkish background.

(*2*) *Peripheral nerve teasing.* Peripheral nerve fiber teasing shall be used. Detailed staining methodology is available in standard histotechnological manuals such as AFIP (1968), Ralis *et al.* (1973), and Chang (1979) under paragraph (g) of this section. The nerve fiber teasing technique is discussed in Spencer and Schaumberg (1980) under paragraph (g) of this section. A section of normal tissue shall be included in each staining to assure that adequate staining has occurred. Any changes shall be noted and representative photographs shall be taken. If a lesion(s) is observed, the special techniques shall be repeated in the next lower treatment group until no further lesion is detectable.

(F) *Examination.* All stained microscopic slides shall be examined with a standard research microscope. Examples of cellular alterations (e.g., neuronal vacuolation, degeneration, and necrosis) and tissue changes (e.g., gliosis, leukocytic infiltration, and cystic formation) shall be recorded and photographed.

(f) Data collection, reporting, and evaluation. In addition to information meeting the requirements stated under 40 CFR 79.60 and 79.61, the following specific information shall be reported:

(1) *Description of test system and test methods.* (i) A description of the general design of the experiment shall be provided. This shall include a short justification explaining any decisions where professional judgment is involved such as fixation technique and choice of stains; and

(ii) Positive control data from the laboratory performing the test that demonstrate the sensitivity of the procedures being used. Historical data may be used if all essential aspects of

the experimental protocol are the same.

(2) *Results*. All observations shall be recorded and arranged by test groups. This data may be presented in the following recommended format:

(i) *Description of signs and lesions for each animal*. For each animal, data must be submitted showing its identification (animal number, treatment, dose, duration), neurologic signs, location(s) nature of, frequency, and severity of lesion(s). A commonly-used scale such as 1+, 2+, 3+, and 4+ for degree of severity ranging from very slight to extensive may be used. Any diagnoses derived from neurologic signs and lesions including naturally occurring diseases or conditions, shall also be recorded;

(ii) *Counts and incidence of lesions, by test group*. Data shall be tabulated to show:

(A) The number of animals used in each group, the number of animals displaying specific neurologic signs, and the number of animals in which any lesion was found; and

(B) The number of animals affected by each different type of lesion, the average grade of each type of lesion, and the frequency of each different type and/or location of lesion.

(iii) *Evaluation of data*. (A) An evaluation of the data based on gross necropsy findings and microscopic pathology observations shall be made and supplied. The evaluation shall include the relationship, if any, between the animal's exposure to the test atmosphere and the frequency and severity of any lesions observed; and

(B) The evaluation of dose-response, if existent, for various groups shall be given, and a description of statistical method must be presented. The evaluation of neuropathology data shall include, where applicable, an assessment in conjunction with any other neurotoxicity studies, electrophysiological, behavioral, or neurochemical, which may be relevant to this study.

(g) *References*. For additional background information on this test guideline, the following references should be consulted.

(1) 40 CFR 798.6400, Neuropathology.

(2) AFIP Manual of Histologic Staining Methods. (New York: McGraw-Hill (1968).

(3) Chang, L.W. A Color Atlas and Manual for Applied Histochemistry. (Springfield, IL: Charles C. Thomas, 1979).

(4) Dunnick, J.K., et.al. Thirteen-week Toxicity Study of N-Hexane in B6C3F1 Mice After Inhalation Exposure (1989) Toxicology, 57, 163–172.

(5) Hayat, M.A. ''Vol. 1. Biological applications,'' Principles and techniques of electron microscopy. (New York: Van Nostrand Reinhold, 1970).

(6) Palay S.L., Chan-Palay, V. Cerebellar Cortex: Cytology and Organization. (New York: Springer-Verlag, 1974).

(7) Ralis, H.M., Beesley, R.A., Ralis, Z.A. Techniques in Neurohistology. (London: Butterworths, 1973).

(8) Sette, W. ''Pesticide Assessment Guidelines, Subdivision F, Neurotoxicity Test Guidelines.'' Report No. 540/09–91–123 U.S. Environmental Protection Agency 1991 (NTIS # PB91–154617).

(9) Spencer, P.S., Schaumburg, H.H. (eds). Experimental and Clinical Neurotoxicology. (Baltimore: Williams and Wilkins, 1980).

(10) Zeman, W., Innes, J.R.M. Craigie's Neuroanatomy of the Rat. (New York: Academic, 1963).

[59 FR 33093, June 27, 1994, as amended at 63 FR 63793, Nov. 17, 1999]

§ 79.67 Glial fibrillary acidic protein assay.

(a) *Purpose*. Chemical-induced injury of the nervous system, *i.e.*, the brain, is associated with astrocytic hypertrophy at the site of damage (see O'Callaghan, 1988 in paragraph (e)(3) in this section). Assays of glial fibrillary acidic protein (GFAP), the major intermediate filament protein of astrocytes, can be used to document this response. To date, a diverse variety of chemical insults known to be injurious to the central nervous system have been shown to increase GFAP. Moreover, increases in GFAP can be seen at concentrations below those necessary to produce cytopathology as determined by routine Nissl stains (standard neuropathology). Thus it appears that assays of GFAP represent a sensitive

approach for documenting the existence and location of chemical-induced injury of the central nervous system. Additional functional, histopathological, and biochemical tests are necessary to assess completely the neurotoxic potential of any chemical. This biochemical test is intended to be used in conjunction with neurohistopathological studies.

(b) *Principle of the test method.* (1) This guideline describes the conduct of a radioimmunoassay for measurement of the amount of GFAP in the brain of vehicle emission-exposed and unexposed control animals. It is based on modifications (O'Callaghan & Miller 1985 in paragraph (e)(5), O'Callaghan 1987 in paragraph (e)(1) of this section) of the dot-immunobinding procedure described by Jahn *et al.* (1984) in paragraph (e)(2) of this section. Briefly, brain tissue samples from study animals are assayed for total protein, diluted in dot-immunobinding buffer, and applied to nitrocellulose sheets. The spotted sheets are then fixed, blocked, washed and incubated in anti-GFAP antibody and [I^{125}] Protein A. Bound protein A is then quantified by gamma spectrometry. In lieu of purified protein standards, standard curves are constructed from dilution of a single control sample. By comparing the immunoreactivity of individual samples (both control and exposed groups) with that of the sample used to generate the standard curve, the relative immunoreactivity of each sample is obtained. The immunoreactivity of the control groups is normalized to 100 percent and all data are expressed as a percentage of control. A variation on this radioimmunoassay procedure has been proposed (O'Callaghan 1991 in paragraph (e)(4) of this section) which uses a ''sandwich'' of GFAP, anti-GFAP, and a chromophore in a microtiter plate format enzyme-link immunosorbent assay (ELISA). The use of this variation shall be justified.

(2) This assay may be done separately or in combination with the subchronic toxicity study, pursuant to the provisions of § 79.62.

(c) *Test procedure*—(1) *Animal selection*—(i) *Species and strain.* Test shall be performed on the species being used in concurrent testing for neurotoxic or other health effect endpoints. This will generally be a species of laboratory rat. The use of other rodent or non-rodent species shall be justified.

(ii) *Age.* Based on other concurrent testing, young adult rats shall be used. Study rodents shall not be older than ten weeks at the start of exposures.

(iii) *Number of animals.* A minimum of ten animals per group shall be used. The tissues from each animal shall be examined separately.

(iv) *Sex.* Both sexes shall be used unless it is demonstrated that one sex is refractory to the effects.

(2) *Materials.* The materials necessary to perform this study are [I^{125}] Protein A (2–10 μCi/μg), Anti-sera to GFAP, nitrocellulose paper (0.1 or 0.2 μm pore size), sample application template (optional; e.g., ''Minifold II'', Schleicher & Schuell, Keene, NH), plastic sheet incubation trays.

(3) *Study conduct.* (i) All data developed within this study shall be in accordance with good laboratory practice provisions under § 79.60.

(ii) *Tissue Preparation.* Animals are euthanized 24 hours after the last exposure and the brain is excised from the skull. On a cold dissecting platform, the following six regions are dissected freehand: cerebellum; cerebral cortex; hippocampus; striatum; thalamus/hypothalamus; and the rest of the brain. Each region is then weighed and homogenized in 10 volumes of hot (70–90 °C) 1 percent (w/v) sodium dodecyl sulfate (SDS). Homogenization is best achieved through sonic disruption. A motor driven pestle inserted into a tissue grinding vessel is a suitable alternative. The homogenized samples can then be stored frozen at −70 °C for at least 4 years without loss of GFAP content.

(iii) *Total Protein Assay.* Aliquots of the tissue samples are assayed for total protein using the method of Smith *et al.* (1985) in paragraph (e)(7) of this section. This assay may be purchased in kit form (e.g., Pierce Chemical Company, Rockford, IL).

(iv) *Sample Preparation.* Dilute tissue samples in sample buffer (120 mM KCl, 20 mM NaCl, 2 mM $MgCl_2$), 5 mM Hepes, pH 7.4, 0.7 percent Triton X–100) to a final concentration of 0.25 mg total protein per ml (5 μg/20 μl).

(v) *Preparation of Standard Curve.* Dilute a single control sample in sample buffer to give at least five standards, between 1 and 10 µg total protein per 20 µl. The suggested values of total protein per 20 µl sample buffer are 1.25, 2.50, 3.25, 5.0, 6.25, 7.5, 8.75, and 10.0 µg.

(vi) *Preparation of Nitrocellulose Sheets.* Nitrocellulose sheets of 0.1 or 0.2 micron pore size are rinsed by immersion in distilled water for 5 minutes and then air dried.

(vii) *Sample Application.* Samples can be spotted onto the nitrocellulose sheets free-hand or with the aid of a template. For free-hand application, draw a grid of squares approximately 2 centimeters by 2 centimeters (cm) on the nitrocellulose sheets using a soft pencil. Spot 5–10 µl portions to the center of each square for a total sample volume of 20 µl. For template aided sample application a washerless microliter capacity sample application manifold is used. Position the nitrocellulose sheet in the sample application device as recommended by the manufacturer and spot a 20 µl sample in one application. Do not wet the nitrocellulose or any support elements prior to sample application. Do not apply vacuum during or after sample application. After spotting samples (using either method), let the sheets air dry. The sheets can be stored at room temperature for several days after sample application.

(viii) *Standard Incubation Conditions.* These conditions have been described by Jahn *et al.* (1984) in paragraph (e)(2) of this section. All steps are carried out at room temperature on a flat shaking platform (one complete excursion every 2–3 seconds). For best results, do not use rocking or orbital shakers. Perform the following steps in enough solution to cover the nitrocellulose sheets to a depth of 1 cm.

(A) Incubate 20 minutes in fixer (25 percent (v/v) isopropanol, 10 percent (v/v) acetic acid).

(B) Discard fixer, wash several times in deionized water to eliminate the fixer, and then incubate for 5 minutes in Tris-buffered saline (TBS): 200 mM NaCL, 60 mM Tris-HCl to pH 7.4.

(C) Discard TBS and incubate 1 hour in blocking solution (0.5 percent gelatin (w/v)) in TBS.

(D) Discard blocking solution and incubate for 2 hours in antibody solution (anti-GFAP antiserum diluted to the desired dilution in blocking solution containing 0.1 percent Triton X–100). Serum anti-bovine GFAP, which cross reacts with GFAP from rodents and humans, can be obtained commercially (e.g., Dako Corp.) and used at a dilution of 1:500.

(E) Discard antibody solution, and wash in 4 changes of TBS for 5 minutes each time. Then wash in TBS for 10 minutes.

(F) Discard TBS and incubate in blocking solution for 30 minutes.

(G) Discard blocking solution and incubate for 1 hour in Protein A solution ([I^{125}]-labeled Protein A diluted in blocking solution containing 0.1 percent Triton X–100, sufficient to produce 2000 counts per minute (cpm) per 10 µl of Protein A solution).

(H) Remove Protein A solution (it may be reused once). Wash in 0.1 percent Triton X–100 in TBS (TBSTX) for 5 minutes, 4 times. Then wash in TBSTX for 2–3 hours for 4 additional times. An overnight wash in a larger volume can be used to replace the last 4 washes.

(I) Hang sheets to air-dry. Cut out squares or spots and count radioactivity in a gamma counter.

(ix) *Expression of data.* Compare radioactivity counts for samples obtained from control and treated animals with counts obtained from the standard curve. By comparing the immunoreactivity (counts) of each sample with that of the standard curve, the relative amount of GFAP in each sample can be determined and expressed as a percent of control.

(d) *Data Reporting and Evaluation*—(1) *Test Report.* In addition to information meeting the requirements stated under 40 CFR 79.60, the following specific information shall be reported:

(i) Body weight and brain region weights at time of sacrifice for each subject tested;

(ii) Indication of whether each subject survived to sacrifice or time of death;

(iii) Data from control animals and blank samples; and

(iv) Statistical evaluation of results;

(2) *Evaluation of Results.* (i) Results shall be evaluated in terms of the extent of change in the amount of GFAP as a function of treatment and dose. GFAP assays (of any brain region) from a minimum of 6 samples typically will result in a standard error of the mean of ±5 percent. In this case, a chemically-induced increase in GFAP of 115 percent of control is likely to be statistically significant.

(ii) The results of this assay shall be compared to and evaluated with any relevant behavioral and histopathological data.

(e) *References.* For additional background information on this test guideline the following references should be consulted.

(1) Brock, T.O and O'Callaghan, J.P. 1987. Quantitative changes in the synaptic vesicle proteins, synapsin I and p38 and the astrocyte specific protein, glial fibrillary acidic protein, are associated with chemical-induced injury to the rat central nervous system, J. Neurosci. 7:931–942.

(2) Jahn, R., Schiebler, W. Greengard, P. 1984. A quantitative dot-immunobinding assay for protein using nitrocellulose membrane filters. Proc. Natl. Acad. Sci. U.S.A. 81:1684–1687.

(3) O'Callaghan, J.P. 1988. Neurotypic and gliotypic protein as biochemical markers of neurotoxicity. Neurotoxicol. Teratol. 10:445–452.

(4) O'Callaghan, J.P. 1991. Quantification of glial fibrillary acidic protein: comparison of slot-immunobinding assays with a novel sandwich ELISA. Neurotoxicol. Teratol. 13:275–281.

(5) O'Callaghan, J.P. and Miller, D.B. 1985. Cerebellar hypoplasia in the Gunn rat is associated with quantitative changes in neurotypic and gliotypic proteins. J. Pharmacol. Exp. Ther. 234:522–532.

(6) Sette, W.F. ''Pesticide Assessment Guidelines, Subdivision 'F', Hazard Evaluation: Human and Domestic Animals, Addendum 10, Neurotoxicity, Series 81, 82, and 83'' US-EPA, Office of Pesticide Programs, EPA–540/09–91–123, March 1991.

(7) Smith, P.K., Krohn, R.I., Hermanson, G.T., Mallia, A.K., Gartner, F.H., Provenzano, M.D., Fujimoto, E.K., Goeke, N.M., Olson, B.J., Klenk, D.C. 1985. Measurement of protein using bicinchoninic acid. Annal. Biochem. 150:76–85.

§ 79.68 *Salmonella typhimurium* reverse mutation assay.

(a) *Purpose.* The *Salmonella typhimurium* histidine (his) reversion system is a microbial assay which measures $his^- \rightarrow his^+$ reversion induced by chemicals which cause base changes or frameshift mutations in the genome of the microorganism *Salmonella typhimurium.*

(b) *Definitions.* For the purposes of this section, the following definitions apply:

Base pair mutagen means an agent which causes a base change in DNA. In a reversion assay, this change may occur at the site of the original mutation or at a second site in the chromosome.

Frameshift mutagen is an agent which causes the addition or deletion of single or multiple base pairs in the DNA molecule.

Salmonella typhimurium reverse mutation assay detects mutation in a gene of a histidine-requiring strain to produce a histidine independent strain of this organism.

(c) *Reference substances.* These may include, but need not be limited to, sodium azide, 2-nitrofluorene, 9-aminoacridine, 2-aminoanthracene, congo red, benzopurpurin 4B, trypan blue or direct blue 1.

(d) *Test method*—(1) *Principle.* Motor vehicle combustion emissions from fuel or additive/base fuel mixtures are, first, filtered to trap particulate matter and, then, passed through a sorbent resin to trap semi-volatile gases. Bacteria are separately exposed to the extract from both the filtered particulates and the resin-trapped organics. Assays are conducted using both test mixtures with and without a metabolic activation system and exposed cells are plated onto minimal medium. After a suitable period of incubation, revertant colonies are counted in test cultures and compared to the number of spontaneous revertants in unexposed control cultures.

(2) *Description.* Several methods for performing the test have been described. The procedures described here are for the direct plate incorporation

method and the azo-reduction method. Among those used are:

(i) Direct plate incorporation method;

(ii) Preincubation method;

(iii) Azo-reduction method;

(iv) Microsuspension method; and

(v) Spiral assay.

(3) *Strain selection*—(i) *Designation.* Five tester strains shall be used in the assay. At the present time, TA1535, TA1537, TA98, and TA100 are designated as tester strains. The fifth strain will be chosen from the pool of Salmonella strains commonly used to determine the degree to which nitrated organic compounds, *i.e.*, nitroarenes, contribute to the overall mutagenic activity of a test substance. TA98/1,8–DNP_6 or other suitable Rosenkranz nitro-reductase resistant strains will be considered acceptable. The choice of the particular strain is left to the discretion of the researcher. However, the researcher shall justify the use of the selected bacterial tester strains.

(ii) *Preparation and storage of bacterial tester strains.* Recognized methods of stock culture preparation and storage shall be used. The requirement of histidine for growth shall be demonstrated for each strain. Other phenotypic characteristics shall be checked using such methods as crystal violet sensitivity and resistance to ampicillin. Spontaneous reversion frequency shall be in the range expected as reported in the literature and as established in the laboratory by historical control values.

(iii) *Bacterial growth.* Fresh cultures of bacteria shall be grown up to the late exponential or early stationary phase of growth (approximately 108–109 cells per ml).

(4) *Exogenous metabolic activation.* Bacteria shall be exposed to the test substance both in the presence and absence of an appropriate exogenous metabolic activation system. For the direct plate incorporation method, the most commonly used system is a cofactor-supplemented postmitochondrial fraction prepared from the livers of rodents treated with enzyme-inducing agents, such as Aroclor 1254. For the azo-reduction method, a cofactor- supplemented postmitochondrial fraction (S-9) prepared from the livers of untreated hamsters is preferred. For this method, the cofactor supplement shall contain flavin mononucleotide, exogenous glucose 6-phosphate dehydrogenase, NADH and excess of glucose-6-phosphate.

(5) *Control groups*—(i) *Concurrent controls.* Concurrent positive and negative (untreated) controls shall be included in each experiment. Positive controls shall ensure both strain responsiveness and efficacy of the metabolic activation system.

(ii) Strain specific positive controls shall be included in the assay. Examples of strain specific positive controls are as follows:

(A) Strain TA1535, TA100: sodium azide;

(B) TA98: 2-nitrofluorene (without activation), 2-anthramine (with activation);

(C) TA1537: 9-aminoacridine; and

(D) TA98/1,8–DNP_6: benzo(a)pyrene (with activation).

The papers by Claxton *et al.*, 1991 and 1992 in paragraph (g) in this section will provide helpful information for the selection of positive controls.

(iii) *Positive controls to ensure the efficacy of the activation system.* The positive control reference substances for tests including a metabolic activation system shall be selected on the basis of the type of activation system used in the test. 2-Aminoanthracene is an example of a positive control compound in plate-incorporation tests using postmitochondrial fractions from the livers of rodents treated with enzyme-inducing agents such as Aroclor-1254. Congo red is an example of a positive control compound in the azo-reduction method. Other positive control reference substances may be used.

(iv) *Class-specific positive controls.* The azo-reduction method shall include positive controls from the same class of compounds as the test agent wherever possible.

(6) *Sampling the test atmosphere.*(i) Extracts of test emissions are collected on Teflon®-coated glass fiber filters using an exhaust dilution setup. The particulates are extracted with dichloromethane (DCM) using Soxhlet extraction techniques. Extracts in DCM can be stored at dry ice temperatures until use.

(ii) Gaseous hydrocarbons passing through the filter are trapped by a porous, polymer resin, like XAD–2/styrene-divinylbenzene, or an equivalent product. Methylene chloride is used to extract the resin and the sample is evaporated to dryness before storage or use.

(iii) Samples taken from this material are then used to expose the cells in this assay. Final concentration of extracts in solvent/vehicle, or after solvent exchange, shall not interfere with cell viability or growth rate. The paper by Stump (1982) in paragraph (g) of this section is useful for preparing extracts of particulate and semi-volatile organic compounds from diesel and gasoline exhaust stream.

(iv) Exposure concentrations. (A) The test should initially be performed over a broad range of concentrations. Among the criteria to be taken into consideration for determining the upper limits of test substance concentration are cytotoxicity and solubility. Cytotoxicity of the test chemical may be altered in the presence of metabolic activation systems. Toxicity may be evidenced by a reduction in the number of spontaneous revertants, a clearing of the background lawn or by the degree of survival of treated cultures. Relatively insoluble samples shall be tested up to the limits of solubility. The upper test chemical concentration shall be determined on a case by case basis.

(B) Generally, a maximum of 5 mg/plate for pure substances is considered acceptable. At least 5 different concentrations of test substance shall be used with adequate intervals between test points.

(C) When appropriate, a single positive response shall be confirmed by testing over a narrow range of concentrations.

(e) *Test performance*. All data developed within this study shall be in accordance with good laboratory practice provisions under § 79.60.

(1) Direct plate incorporation method. When testing with metabolic activation, test solution, bacteria, and 0.5 ml of activation mixture containing an adequate amount of postmitochondrial fraction shall be added to the liquid overlay agar and mixed. This mixture is poured over the surface of a selective agar plate. Overlay agar shall be allowed to solidify before incubation. At the end of the incubation period, revertant colonies per plate shall be counted. When testing without metabolic activation, the test sample and 0.1 ml of a fresh bacterial culture shall be added to 2.0 ml of overlay agar.

(2) Azo-reduction method. When testing with metabolic activation, 0.5 ml of activation mixture containing 150 µl of postmitochondrial fraction and 0.1 ml of bacterial culture shall be added to a test tube kept on ice. 0.1 ml of test solution shall be added, and the tubes shall be incubated with shaking at 30 °C for 30 minutes. At the end of the incubation period, 2.0 ml of agar shall be added to each tube, the contents mixed and poured over the surface of a selective agar plate. Overlay agar shall be allowed to solidify before incubation. At the end of the incubation period, revertant colonies per plate shall be counted. For tests without metabolic activation, 0.5 ml of buffer shall be used in place of the 0.5 ml of activation mixture. All other procedures shall be the same as those used for the test with metabolic activation.

(3) Other methods/modifications may also be appropriate.

(4) Media. An appropriate selective medium with an adequate overlay agar shall be used.

(5) Incubation conditions. All plates within a given experiment shall be incubated for the same time period. This incubation period shall be for 48–72 hours at 37 °C.

(6) Number of cultures. All plating shall be done at least in triplicate.

(f) *Data and report*—(1) *Treatment of results*. Data shall be presented as number of revertant colonies per plate, revertants per kilogram (or liter) of fuel, and as revertants per kilometer (or mile, or brake-horsepower/hour, as appropriate) for each replicate and dose. These same measures shall be recorded on both the negative and positive control plates. The mean number of revertant colonies per plate, revertants per kilogram (or liter) of fuel, and revertants per kilometer (or mile, or brake-horsepower/hour), as well as individual plate counts and standard deviations shall be presented

for the test substance, positive control, and negative control plates.

(2) *Statistical evaluation*. Data shall be evaluated by appropriate statistical methods. Those methods shall include, at a minimum, means and standard deviations of the reversion data.

(3) *Interpretation of results*. (i) There are several criteria for determining a positive result, one of which is a statistically significant dose-related increase in the number of revertants. Another criterion may be based upon detection of a reproducible and statistically significant positive response for at least one of the test substance concentrations.

(ii) A test substance which does not produce either a statistically significant dose-related increase in the number of revertants or a statistically significant and reproducible positive response at any one of the test points is considered nonmutagenic in this system.

(iii) Both biological and statistical significance shall be considered together in the evaluation.

(4) *Test evaluation*. (i) Positive results from the *Salmonella typhimurium* reverse mutation assay indicate that, under the test conditions, the test substance induces point mutations by base changes or frameshifts in the genome of this organism.

(ii) Negative results indicate that under the test conditions the test substance is not mutagenic in *Salmonella typhimurium*.

(5) *Test report*. In addition to the reporting recommendations as specified under 40 CFR 79.60, the following specific information shall be reported:

(i) Sampling method(s) used and manner in which cells are exposed to sample solution;

(ii) Bacterial strains used;

(iii) Metabolic activation system used (source, amount and cofactor); details of preparation of postmitochondrial fraction;

(iv) Concentration levels and rationale for selection of concentration range;

(v) Description of positive and negative controls, and concentrations used, if appropriate;

(vi) Individual plate counts, mean number of revertant colonies per plate, number of revertants per kilometer (or mile, or brake-horsepower/hour), and standard deviation; and

(vii) Dose-response relationship, if applicable.

(g) *References*. For additional background information on this test guideline, the following references should be consulted.

(1) 40 CFR 798.5265, The *Salmonella typhimurium* reverse mutation asay.

(2) Ames, B.N., McCann, J., Yamasaki, E. ''Methods for detecting carcinogens and mutagens with the Salmonella/mammalian microsome mutagenicity test,'' Mutation Research 31:347–364 (1975).

(3) Huisingh, J.L., et al.,''Mutagenic and Carcinogenic Potency of Extracts of Diesel and Related Environmental Emissions: Study Design, Sample Generation, Collection, and Preparation''. In: Health Effects of Diesel Engine Emissions, Vol. II, W.E. Pepelko, R., M., Danner and N. A. Clarke (Eds.), US EPA, Cincinnati, EPA–600/9–80–057b, pp. 788–800 (1980).

(4) [Reserved]

(5) Claxton, L.D., Allen, J., Auletta, A., Mortelmans, K., Nestmann, E., Zeiger, E. ''Guide for the *Salmonella typhimurium*/mammalian microsome tests for bacterial mutagenicity'' Mutation Research 189(2):83–91 (1987).

(6) Claxton, L., Houk, V.S., Allison, J.C., Creason, J., ''Evaluating the relationship of metabolic activation system concentrations and chemical dose concentrations for the Salmonella Spiral and Plate Assays'' Mutation Research 253:127–136 (1991).

(7) Claxton, L., Houk, V.S., Monteith, L.G., Myers, L.E., Hughes, T.J., ''Assessing the use of known mutagens to calibrate the *Salmonella typhimurium* mutagenicity assay: I. Without exogenous activation.'' Mutation Research 253:137–147 (1991).

(8) Claxton, L., Houk, V.S., Warner, J.R., Myers, L.E., Hughes, T.J., ''Assessing the use of known mutagens to calibrate the *Salmonella typhimurium* mutagenicity assay: II. With exogenous activation.'' Mutation Research 253:149–159 (1991).

(9) Claxton, L., Creason, J., Lares, B., Augurell, E., Bagley, S., Bryant, D.W., Courtois, Y.A., Douglas, G., Clare, C.B., Goto, S., Quillardet, P., Jagannath,

D.R., Mohn, G., Neilsen, P.A., Ohnishi, Y., Ong, T., Pederson, T.C., Shimizu, H., Nylund, L., Tokiwa, H., Vink, I.G.R., Wang, Y., Warshawsky, D., ''Results of the IPCS Collaborative Study on Complex Mixtures'' Mutation Research 276:23–32 (1992).

(10) Claxton, L., Douglas, G., Krewski, D., Lewtas, J., Matsushita, H., Rosenkranz, H., ''Overview, conclusions, and recommendations of the IPCS Collaborative Study on Complex Mixtures'' Mutation Research 276:61–80 (1992).

(11) Houk, V.S., Schalkowsky, S., and Claxton, L.D., ''Development and Validation of the Spiral Salmonella Assay: An Automated Approach to Bacterial Mutagenicity Testing'' Mutation Research 223:49–64 (1989).

(12) Jones, E., Richold, M., May, J.H., and Saje, A. ''The Assessment of the Mutagenic Potential of Vehicle Engine Exhaust in the Ames Salmonella Assay Using a Direct Exposure Method'' Mutation Research 97:35–40 (1985).

(13) Maron, D., and Ames, B. N., Revised methods for the Salmonella mutagenicity test, Mutation Research, 113:173–212 (1983).

(14) Prival, M.J., and Mitchell, V.D. ''Analysis of a method for testing azo dyes for mutagenic activity in *Salmonella typhimurium* in the presence of flavin mononucleotide and hamster liver S-9,'' Mutation Research 97:103–116 (1982).

(15) Rosenkranz, H.S., et.al. ''Nitropyrenes: Isolation, identification, and reduction of mutagenic impurities in carbon black and toners'' Science 209:1039–43 (1980).

(16) Stump, F., Snow, R., et.al., ''Trapping gaseous hydrocarbons for mutagenic testing'' SAE Technical Paper Series, No. 820776 (1982).

(17) Vogel, H.J., Bonner, D.M. ''Acetylornithinase of E. coli: partial purification and some properties,'' Journal of Biological Chemistry. 218:97–106 (1956).

[59 FR 33093, June 27, 1994, as amended at 61 FR 36513, July 11, 1996]

PART 80—REGULATION OF FUELS AND FUEL ADDITIVES

Subpart A—General Provisions

Sec.
80.1 Scope.
80.2 Definitions.
80.3 Test methods.
80.4 Right of entry; tests and inspections.
80.5 Penalties.
80.7 Requests for information.
80.8 Sampling methods for gasoline and diesel fuel.
80.9 Rounding a test result for determining conformance with a fuels standard.

Subpart B—Controls and Prohibitions

80.20–80.21 [Reserved]
80.22 Controls and prohibitions.
80.23 Liability for violations.
80.24 Controls applicable to motor vehicle manufacturers.
80.25 [Reserved]
80.26 Confidentiality of information.
80.27 Controls and prohibitions on gasoline volatility.
80.28 Liability for violations of gasoline volatility controls and prohibitions.
80.29 Controls and prohibitions on diesel fuel quality.
80.30 Liability for violations of diesel fuel control and prohibitions.
80.32 Controls applicable to liquefied petroleum gas retailers and wholesale purchaser-consumers.
80.33 Controls applicable to natural gas retailers and wholesale purchaser-consumers.

Subpart C—Oxygenated Gasoline

80.35 Labeling of retail gasoline pumps; oxygenated gasoline.
80.36–80.39 [Reserved]

Subpart D—Reformulated Gasoline

80.40 Fuel certification procedures.
80.41 Standards and requirements for compliance.
80.42 Simple emissions model.
80.43–80.44 [Reserved]
80.45 Complex emissions model.
80.46 Measurement of reformulated gasoline fuel parameters.
80.47 [Reserved]
80.48 Augmentation of the complex emission model by vehicle testing.
80.49 Fuels to be used in augmenting the complex emission model through vehicle testing.
80.50 General test procedure requirements for augmentation of the emission models.
80.51 Vehicle test procedures.
80.52 Vehicle preconditioning.

80.53–80.54 [Reserved]
80.55 Measurement methods for benzene and 1,3-butadiene.
80.56 Measurement methods for formaldehyde and acetaldehyde.
80.57–80.58 [Reserved]
80.59 General test fleet requirements for vehicle testing.
80.60 Test fleet requirements for exhaust emission testing.
80.61 [Reserved]
80.62 Vehicle test procedures to place vehicles in emitter group sub-fleets.
80.63–80.64 [Reserved]
80.65 General requirements for refiners and importers.
80.66 Calculation of reformulated gasoline properties.
80.67 Compliance on average.
80.68 Compliance surveys.
80.69 Requirements for downstream oxygenate blending.
80.70 Covered areas.
80.71 Descriptions of VOC-control regions.
80.72 Procedures for opting out of the covered areas.
80.73 Inability to produce conforming gasoline in extraordinary circumstances.
80.74 Recordkeeping requirements.
80.75 Reporting requirements.
80.76 Registration of refiners, importers or oxygenate blenders.
80.77 Product transfer documentation.
80.78 Controls and prohibitions on reformulated gasoline.
80.79 Liability for violations of the prohibited activities.
80.80 Penalties.
80.81 Enforcement exemptions for California gasoline.
80.82 Butane blending.
80.83 Renewable oxygenate requirements.
80.84 Treatment of interface and transmix.
80.85–80.89 [Reserved]

Subpart E—Anti-Dumping

80.90 Conventional gasoline baseline emissions determination.
80.91 Individual baseline determination.
80.92 Baseline auditor requirements.
80.93 Individual baseline submission and approval.
80.94 Requirements for gasoline produced at foreign refineries.
80.95–80.100 [Reserved]
80.101 Standards applicable to refiners and importers.
80.102 [Reserved]
80.103 Registration of refiners and importers.
80.104 Recordkeeping requirements.
80.105 Reporting requirements.
80.106 Product transfer documents.
80.107–80.124 [Reserved]

Subpart F—Attest Engagements

80.125 Attest engagements.
80.126 Definitions.
80.127 Sample size guidelines.
80.128 Alternative agreed upon procedures for refiners and importers.
80.129 [Reserved]
80.130 Agreed upon procedures reports.
80.131 Agreed upon procedures for GTAB, certain conventional gasoline imported by truck, previously certified gasoline used to produce gasoline, and butane blenders.
80.132 [Reserved]
80.133 Agreed-upon procedures for refiners and importers.
80.134–80.135 [Reserved]

Subpart G—Detergent Gasoline

80.140 Definitions.
80.141 Interim detergent gasoline program.
80.142–80.154 [Reserved]
80.155 Interim detergent program controls and prohibitions.
80.156 Liability for violations of the interim detergent program controls and prohibitions.
80.157 Volumetric additive reconciliation (''VAR''), equipment calibration, and recordkeeping requirements.
80.158 Product transfer documents (PTDs).
80.159 Penalties.
80.160 Exemptions.
80.161 Detergent additive certification program.
80.162 Additive compositional data.
80.163 Detergent certification options.
80.164 Certification test fuels.
80.165 Certification test procedures and standards.
80.166 Carburetor deposit control performance test and test fuel guidelines.
80.167 Confirmatory testing.
80.168 Detergent certification program controls and prohibitions.
80.169 Liability for violations of the detergent certification program controls and prohibitions.
80.170 Volumetric additive reconciliation (VAR), equipment calibration, and recordkeeping requirements.
80.171 Product transfer documents (PTDs).
80.172 Penalties.
80.173 Exemptions.
80.174 Addresses.

Subpart H—Gasoline Sulfur

GENERAL INFORMATION

80.180–80.185 [Reserved]
80.190 Who must register with EPA under the sulfur program?

GASOLINE SULFUR STANDARDS

80.195 What are the gasoline sulfur standards for refiners and importers?
80.200 What gasoline is subject to the sulfur standards and requirements?
80.205 How is the annual refinery or importer average and corporate pool average sulfur level determined?
80.210 What sulfur standards apply to gasoline downstream from refineries and importers?
80.211 What are the requirements for treating imported gasoline as blendstock?
80.212 What requirements apply to oxygenate blenders?
80.213 What alternative sulfur standards and requirements apply to transmix processors and transmix blenders?
80.214 [Reserved]

GEOGRAPHIC PHASE-IN PROGRAM

80.215 What is the scope of the geographic phase-in program?
80.216 What standards apply to gasoline produced or imported for use in the GPA?
80.217 How does a refiner or importer apply for the GPA standards?
80.218 [Reserved]
80.219 Designation and downstream requirements for GPA gasoline.
80.220 What are the downstream standards for GPA gasoline?

HARDSHIP PROVISIONS

80.225 What is the definition of a small refiner?
80.230 Who is not eligible for the hardship provisions for small refiners?
80.235 How does a refiner obtain approval as a small refiner?
80.240 What are the small refiner gasoline sulfur standards?
80.245 How does a small refiner apply for a sulfur baseline?
80.250 How is the small refiner sulfur baseline and volume determined?
80.255 Compliance plans and demonstration of commitment to produce low sulfur gasoline.
80.260 What are the procedures and requirements for obtaining a hardship extension?
80.265 How will the EPA approve or disapprove a hardship extension application?
80.270 Can a refiner seek temporary relief from the requirements of this subpart?

ALLOTMENT TRADING PROGRAM

80.271 How can a small refiner obtain an adjustment of its 2004–2007 per-gallon cap standard?
80.275 How are allotments generated and used?

AVERAGING, BANKING AND TRADING (ABT) PROGRAM—GENERAL INFORMATION

80.280 [Reserved]
80.285 Who may generate credits under the ABT program?
80.290 How does a refiner apply for a sulfur baseline?

ABT PROGRAM—BASELINE DETERMINATION

80.295 How is a refinery sulfur baseline determined?
80.300 [Reserved]

ABT PROGRAM—CREDIT GENERATION

80.305 How are credits generated during the time period 2000 through 2003?
80.310 How are credits generated beginning in 2004?

ABT PROGRAM—CREDIT USE

80.315 How are credits used and what are the limitations on credit use?
80.320–80.325 [Reserved]

SAMPLING, TESTING AND RETENTION REQUIREMENTS FOR REFINERS AND IMPORTERS

80.330 What are the sampling and testing requirements for refiners and importers?
80.335 What gasoline sample retention requirements apply to refiners and importers?
80.340 What standards and requirements apply to refiners producing gasoline by blending blendstocks into previously certified gasoline (PCG)?
80.345 [Reserved]
80.350 What alternative sulfur standards and requirements apply to importers who transport gasoline by truck?
80.355 [Reserved]

RECORDKEEPING AND REPORTING REQUIREMENTS

80.360 [Reserved]
80.365 What records must be kept?
80.370 What are the sulfur reporting requirements?
80.371–80.373 [Reserved]

EXEMPTIONS

80.374 What if a refiner or importer is unable to produce gasoline conforming to the requirements of this subpart?
80.375 What requirements apply to California gasoline?
80.380 What are the requirements for obtaining an exemption for gasoline used for research, development or testing purposes?
80.382 What requirements apply to gasoline for use in American Samoa, Guam and the Commonwealth of the Northern Mariana Islands?

VIOLATION PROVISIONS

80.385 What acts are prohibited under the gasoline sulfur program?
80.390 What evidence may be used to determine compliance with the prohibitions and requirements of this subpart and liability for violations of this subpart?
80.395 Who is liable for violations under the gasoline sulfur program?
80.400 What defenses apply to persons deemed liable for a violation of a prohibited act?
80.405 What penalties apply under this subpart?

PROVISIONS FOR FOREIGN REFINERS WITH INDIVIDUAL SULFUR BASELINES

80.410 What are the additional requirements for gasoline produced at foreign refineries having individual small refiner sulfur baselines, foreign refineries granted temporary relief under §80.270, or baselines for generating credits during 2000 through 2003?

ATTEST ENGAGEMENTS

80.415 What are the attest engagement requirements for gasoline sulfur compliance applicable to refiners and importers?

Subpart I—Motor Vehicle Diesel Fuel; Nonroad, Locomotive, and Marine Diesel Fuel; and ECA Marine Fuel

GENERAL INFORMATION

80.500 What are the implementation dates for the motor vehicle diesel fuel sulfur control program?
80.501 What fuel is subject to the provisions of this subpart?
80.502 What definitions apply for purposes of this subpart?
80.503–80.509 [Reserved]
80.510 What are the standards and marker requirements for NRLM diesel fuel and ECA marine fuel?
80.511 What are the per-gallon and marker requirements that apply to NRLM diesel fuel, ECA marine fuel, and heating oil downstream of the refiner or importer?
80.512 May an importer treat diesel fuel as blendstock?
80.513 What provisions apply to transmix processing facilities?
80.514–80.519 [Reserved]

MOTOR VEHICLE DIESEL FUEL STANDARDS AND REQUIREMENTS

80.520 What are the standards and dye requirements for motor vehicle diesel fuel?
80.521 What are the standards and identification requirements for diesel fuel additives?
80.522 May used motor oil be dispensed into diesel motor vehicles or nonroad diesel engines?
80.523 [Reserved]
80.524 What sulfur content standard applies to motor vehicle diesel fuel downstream of the refinery or importer?
80.525 What requirements apply to kerosene blenders?
80.526 [Reserved]
80.527 Under what conditions may motor vehicle diesel fuel subject to the 15 ppm sulfur standard be downgraded to motor vehicle diesel fuel subject to the 500 ppm sulfur standard?
80.528–80.529 [Reserved]

TEMPORARY COMPLIANCE OPTION

80.530 Under what conditions can 500 ppm motor vehicle diesel fuel be produced or imported after May 31, 2006?
80.531 How are motor vehicle diesel fuel credits generated?
80.532 How are motor vehicle diesel fuel credits used and transferred?
80.533 How does a refiner or importer apply for a motor vehicle or non-highway baseline for the generation of NRLM credits or the use of the NRLM small refiner compliance options?
80.534 [Reserved]
80.535 How are NRLM diesel fuel credits generated?
80.536 How are NRLM diesel fuel credits used and transferred?
80.537–80.539 [Reserved]

GEOGRAPHIC PHASE-IN PROVISIONS

80.540 How may a refiner be approved to produce gasoline under the GPA gasoline sulfur standards in 2007 and 2008?
80.541–80.549 [Reserved]

SMALL REFINER HARDSHIP PROVISIONS

80.550 What is the definition of a motor vehicle diesel fuel small refiner or a NRLM diesel fuel small refiner under this subpart?
80.551 How does a refiner obtain approval as a small refiner under this subpart?
80.552 What compliance options are available to motor vehicle diesel fuel small refiners?
80.553 Under what conditions may the small refiner gasoline sulfur standards be extended for a small refiner of motor vehicle diesel fuel?
80.554 What compliance options are available to NRLM diesel fuel small refiners?
80.555 What provisions are available to a large refiner that acquires a small refiner or one or more of its refineries?
80.556–80.559 [Reserved]

OTHER HARDSHIP PROVISIONS

80.560 How can a refiner seek temporary relief from the requirements of this subpart in case of extreme hardship circumstances?
80.561 How can a refiner or importer seek temporary relief from the requirements of this subpart in case of extreme unforeseen circumstances?
80.562–80.569 [Reserved]

LABELING REQUIREMENTS

80.570 What labeling requirements apply to retailers and wholesale purchaser-consumers of diesel fuel beginning June 1, 2006?
80.571 What labeling requirements apply to retailers and wholesale purchaser-consumers of NRLM diesel fuel or heating oil beginning June 1, 2007?
80.572 What labeling requirements apply to retailers and wholesale purchaser-consumers of NR and NRLM diesel fuel and heating oil beginning June 1, 2010?
80.573 What labeling requirements apply to retailers and wholesale purchaser-consumers of NRLM diesel fuel and heating oil beginning June 1, 2012?
80.574 What labeling requirements apply to retailers and wholesale purchaser-consumers of ECA marine fuel beginning June 1, 2014?
80.575–80.579 [Reserved]

SAMPLING AND TESTING

80.580 What are the sampling and testing methods for sulfur?
80.581 What are the batch testing and sample retention requirements for motor vehicle diesel fuel, NRLM diesel fuel, and ECA marine fuel?
80.582 What are the sampling and testing methods for the fuel marker?
80.583 What alternative sampling and testing requirements apply to importers who transport motor vehicle diesel fuel, NRLM diesel fuel, or ECA marine fuel by truck or rail car?
80.584 What are the precision and accuracy criteria for approval of test methods for determining the sulfur content of motor vehicle diesel fuel, NRLM diesel fuel, and ECA marine fuel?
80.585 What is the process for approval of a test method for determining the sulfur content of diesel or ECA marine fuel?
80.586 What are the record retention requirements for test methods approved under this subpart?
80.587–80.589 [Reserved]

RECORDKEEPING AND REPORTING REQUIREMENTS

80.590 What are the product transfer document requirements for motor vehicle diesel fuel, NRLM diesel fuel, heating oil, ECA marine fuel, and other distillates?
80.591 What are the product transfer document requirements for additives to be used in diesel fuel?
80.592 What records must be kept by entities in the motor vehicle diesel fuel and diesel fuel additive distribution systems?
80.593 What are the reporting requirements for refiners and importers of motor vehicle diesel fuel subject to temporary refiner relief standards?
80.594 What are the pre-compliance reporting requirements for motor vehicle diesel fuel?
80.595 How does a small or GPA refiner apply for a motor vehicle diesel fuel volume baseline for the purpose of extending their gasoline sulfur standards?
80.596 How is a refinery motor vehicle diesel fuel volume baseline calculated?
80.597 What are the registration requirements?
80.598 What are the designation requirements for refiners, importers, and distributors?
80.599 How do I calculate volume balances for designation purposes?
80.600 What records must be kept for purposes of the designate and track provisions?
80.601 What are the reporting requirements for purposes of the designate and track provisions?
80.602 What records must be kept by entities in the NRLM diesel fuel, ECA marine fuel, and diesel fuel additive production, importation, and distribution systems?
80.603 What are the pre-compliance reporting requirements for NRLM diesel fuel?
80.604 What are the annual reporting requirements for refiners and importers of NRLM diesel fuel?

EXEMPTIONS

80.605 [Reserved]
80.606 What national security exemption applies to fuels covered under this subpart?
80.607 What are the requirements for obtaining an exemption for diesel fuel or ECA marine fuel used for research, development or testing purposes?
80.608 What requirements apply to diesel fuel and ECA marine fuel for use in the Territories?
80.609 [Reserved]

VIOLATION PROVISIONS

80.610 What acts are prohibited under the diesel fuel sulfur program?
80.611 What evidence may be used to determine compliance with the prohibitions and requirements of this subpart and liability for violations of this subpart?
80.612 Who is liable for violations of this subpart?

80.613 What defenses apply to persons deemed liable for a violation of a prohibited act under this subpart?
80.614 What are the alternative defense requirements in lieu of §80.613(a)(1)(vi)?
80.615 What penalties apply under this subpart?
80.616 What are the enforcement exemptions for California diesel distributed within the State of California?
80.617 How may California diesel fuel be distributed or sold outside of the State of California?
80.618–80.619 [Reserved]

PROVISIONS FOR FOREIGN REFINERS AND IMPORTERS FOR MOTOR VEHICLE DIESEL FUEL SUBJECT TO A TEMPORARY COMPLIANCE OPTION OR HARDSHIP PROVISION

80.620 What are the additional requirements for diesel fuel or distillates produced by foreign refineries subject to a temporary refiner compliance option, hardship provisions, or motor vehicle or NRLM diesel fuel credit provisions?

Subpart J—Gasoline Toxics

GENERAL INFORMATION

80.800–80.805 [Reserved]
80.810 Who shall register with EPA under the gasoline toxics program?

GASOLINE TOXICS PERFORMANCE REQUIREMENTS

80.815 What are the gasoline toxics performance requirements for refiners and importers?
80.820 What gasoline is subject to the toxics performance requirements of this subpart?
80.825 How is the refinery or importer annual average toxics value determined?
80.830 What requirements apply to oxygenate blenders?
80.835 What requirements apply to butane blenders?
80.840 What requirements apply to transmix processors?
80.845 What requirements apply to California gasoline?
80.850 How is the compliance baseline determined?
80.855 What is the compliance baseline for refineries or importers with insufficient data?
80.860–80.905 [Reserved]

BASELINE DETERMINATION

80.910 How does a refiner or importer apply for a toxics baseline?
80.915 How are the baseline toxics value and the baseline toxics volume determined?
80.920–80.980 [Reserved]

RECORDKEEPING AND REPORTING REQUIREMENTS

80.985 What records shall be kept?
80.990 What are the toxics reporting requirements?

EXEMPTIONS

80.995 What if a refiner or importer is unable to produce gasoline conforming to the requirements of this subpart?
80.1000 What are the requirements for obtaining an exemption for gasoline used for research, development or testing purposes?

VIOLATION PROVISIONS

80.1005 What acts are prohibited under the gasoline toxics program?
80.1010 [Reserved]
80.1015 Who is liable for violations under the gasoline toxics program?
80.1020 [Reserved]
80.1025 What penalties apply under this subpart?

PROVISIONS FOR FOREIGN REFINERS WITH INDIVIDUAL TOXICS BASELINES

80.1030 What are the requirements for gasoline produced at foreign refineries having individual refiner toxics baselines?

ATTEST ENGAGEMENTS

80.1035 What are the attest engagement requirements for gasoline toxics compliance applicable to refiners and importers?
80.1040 [Reserved]

ADDITIONAL RULEMAKING

80.1045 What additional rulemaking will EPA conduct?

Subpart K—Renewable Fuel Standard

80.1100 How is the statutory default requirement for 2006 implemented?
80.1101 Definitions.
80.1102–80.1103 [Reserved]
80.1104 What are the implementation dates for the Renewable Fuel Standard Program?
80.1105 What is the Renewable Fuel Standard?
80.1106 To whom does the Renewable Volume Obligation apply?
80.1107 How is the Renewable Volume Obligation calculated?
80.1108–80.1114 [Reserved]
80.1115 How are equivalence values assigned to renewable fuel?
80.1116–80.1124 [Reserved]
80.1125 Renewable Identification Numbers (RINs).

80.1126 How are RINs generated and assigned to batches of renewable fuel by renewable fuel producers or importers?
80.1127 How are RINs used to demonstrate compliance?
80.1128 General requirements for RIN distribution.
80.1129 Requirements for separating RINs from volumes of renewable fuel.
80.1130 Requirements for exporters of renewable fuels.
80.1131 Treatment of invalid RINs.
80.1132 Reported spillage or disposal of renewable fuel.
80.1133–80.1140 [Reserved]
80.1141 Small refinery exemption.
80.1142 What are the provisions for small refiners under the RFS program?
80.1143 What are the opt-in provisions for noncontiguous states and territories?
80.1144–80.1149 [Reserved]
80.1150 What are the registration requirements under the RFS program?
80.1151 What are the recordkeeping requirements under the RFS program?
80.1152 What are the reporting requirements under the RFS program?
80.1153 What are the product transfer document (PTD) requirements for the RFS program?
80.1154 What are the provisions for renewable fuel producers and importers who produce or import less than 10,000 gallons of renewable fuel per year?
80.1155 What are the additional requirements for a producer of cellulosic biomass ethanol or waste derived ethanol?
80.1156–80.1159 [Reserved]
80.1160 What acts are prohibited under the RFS program?
80.1161 Who is liable for violations under the RFS program?
80.1162 [Reserved]
80.1163 What penalties apply under the RFS program?
80.1164 What are the attest engagement requirements under the RFS program?
80.1165 What are the additional requirements under this subpart for a foreign small refiner?
80.1166 What are the additional requirements under this subpart for a foreign producer of cellulosic biomass ethanol or waste derived ethanol?
80.1167 What are the additional requirements under this subpart for a foreign RIN owner?

Subpart L—Gasoline Benzene

80.1200–80.1219 [Reserved]

GENERAL INFORMATION

80.1220 What are the implementation dates for the gasoline benzene program?
80.1225 Who must register with EPA under the gasoline benzene program?

GASOLINE BENZENE REQUIREMENTS

80.1230 What are the gasoline benzene requirements for refiners and importers?
80.1235 What gasoline is subject to the benzene requirements of this subpart?
80.1236 What requirements apply to California gasoline?
80.1238 How is a refinery's or importer's average benzene concentration determined?
80.1240 How is a refinery's or importer's compliance with the gasoline benzene requirements of this subpart determined?

AVERAGING, BANKING AND TRADING (ABT) PROGRAM

80.1270 Who may generate benzene credits under the ABT program?
80.1275 How are early benzene credits generated?
80.1280 How are refinery benzene baselines calculated?
80.1285 How does a refiner apply for a benzene baseline?
80.1290 How are standard benzene credits generated?
80.1295 How are gasoline benzene credits used?

HARDSHIP PROVISIONS

80.1334 What are the requirements for early compliance with the gasoline benzene program?
80.1335 Can a refiner seek relief from the requirements of this subpart?
80.1336 What if a refiner or importer cannot produce gasoline conforming to the requirements of this subpart?

SMALL REFINER PROVISIONS

80.1338 What criteria must be met to qualify as a small refiner for the gasoline benzene requirements of this subpart?
80.1339 Who is not eligible for the provisions for small refiners?
80.1340 How does a refiner obtain approval as a small refiner?
80.1342 What compliance options are available to small refiners under this subpart?
80.1343 What hardship relief provisions are available only to small refiners?
80.1344 What provisions are available to a non-small refiner that acquires one or more of a small refiner's refineries?

SAMPLING, TESTING AND RETENTION REQUIREMENTS

80.1347 What are the sampling and testing requirements for refiners and importers?
80.1348 What gasoline sample retention requirements apply to refiners and importers?

RECORDKEEPING AND REPORTING REQUIREMENTS

80.1350 What records must be kept?

80.1352 What are the pre-compliance reporting requirements for the gasoline benzene program?
80.1354 What are the reporting requirements for the gasoline benzene program?

ATTEST ENGAGEMENTS

80.1356 What are the attest engagement requirements for gasoline benzene compliance?

VIOLATIONS AND PENALTIES

80.1358 What acts are prohibited under the gasoline benzene program?
80.1359 What evidence may be used to determine compliance with the prohibitions and requirements of this subpart and liability for violations of this subpart?
80.1360 Who is liable for violations under the gasoline benzene program?
80.1361 What penalties apply under the gasoline benzene program?

FOREIGN REFINERS

80.1363 What are the additional requirements under this subpart for gasoline produced at foreign refineries?

Subpart M—Renewable Fuel Standard

80.1400 Applicability.
80.1401 Definitions.
80.1402 [Reserved]
80.1403 Which fuels are not subject to the 20% GHG thresholds?
80.1404 [Reserved]
80.1405 What are the Renewable Fuel Standards?
80.1406 Who is an obligated party under the RFS program?
80.1407 How are the Renewable Volume Obligations calculated?
80.1408–80.1414 [Reserved]
80.1415 How are equivalence values assigned to renewable fuel?
80.1416 Petition process for evaluation of new renewable fuels pathways.
80.1417–80.1424 [Reserved]
80.1425 Renewable Identification Numbers (RINs).
80.1426 How are RINs generated and assigned to batches of renewable fuel by renewable fuel producers or importers?
80.1427 How are RINs used to demonstrate compliance?
80.1428 General requirements for RIN distribution.
80.1429 Requirements for separating RINs from volumes of renewable fuel.
80.1430 Requirements for exporters of renewable fuels.
80.1431 Treatment of invalid RINs.
80.1432 Reported spillage or disposal of renewable fuel.
80.1433–80.1439 [Reserved]
80.1440 What are the provisions for blenders who handle and blend less than 125,000 gallons of renewable fuel per year?
80.1441 Small refinery exemption.
80.1442 What are the provisions for small refiners under the RFS program?
80.1443 What are the opt-in provisions for noncontiguous states and territories?
80.1444–80.1448 [Reserved]
80.1449 What are the Production Outlook Report requirements?
80.1450 What are the registration requirements under the RFS program?
80.1451 What are the reporting requirements under the RFS program?
80.1452 What are the requirements related to the EPA Moderated Transaction System (EMTS)?
80.1453 What are the product transfer document (PTD) requirements for the RFS program?
80.1454 What are the recordkeeping requirements under the RFS program?
80.1455 What are the small volume provisions for renewable fuel production facilities and importers?
80.1456 What are the provisions for cellulosic biofuel waiver credits?
80.1457–80.1459 [Reserved]
80.1460 What acts are prohibited under the RFS program?
80.1461 Who is liable for violations under the RFS program?
80.1462 [Reserved]
80.1463 What penalties apply under the RFS program?
80.1464 What are the attest engagement requirements under the RFS program?
80.1465 What are the additional requirements under this subpart for foreign small refiners, foreign small refineries, and importers of RFS–FRFUEL?
80.1466 What are the additional requirements under this subpart for RIN-generating foreign producers and importers of renewable fuels for which RINs have been generated by the foreign producer?
80.1467 What are the additional requirements under this subpart for a foreign RIN owner?
80.1468 Incorporation by reference.

APPENDIX A TO PART 80—TEST FOR THE DETERMINATION OF PHOSPHORUS IN GASOLINE
APPENDIX B TO PART 80—TEST METHODS FOR LEAD IN GASOLINE
APPENDIXES C–G TO PART 80 [RESERVED]

AUTHORITY: 42 U.S.C. 7414, 7521(1), 7545 and 7601(a).

SOURCE: 38 FR 1255, Jan. 10, 1973, unless otherwise noted.

EFFECTIVE DATE NOTE: At 59 FR 7716, Feb. 16, 1994, EPA published amendments to part

80 containing information collection and recordkeeping requirements, which will not become effective until approval has been given by the Office of Management and Budget.

Subpart A—General Provisions

§ 80.1 Scope.

(a) This part prescribes regulations for the control and/or prohibition of fuels and additives for use in motor vehicles and motor vehicle engines. These regulations are based upon a determination by the Administrator that the emission product of a fuel or additive will endanger the public health, or will impair to a significant degree the performance of a motor vehicle emission control device in general use or which the Administrator finds has been developed to a point where in a reasonable time it would be in general use were such regulations promulgated; and certain other findings specified by the Act.

(b) Nothing in this part is intended to preempt the ability of State or local governments to control or prohibit any fuel or additive for use in motor vehicles and motor vehicle engines which is not explicitly regulated by this part.

[38 FR 1255, Jan. 10, 1973, as amended at 38 FR 33741, Dec. 6, 1973; 42 FR 25732, May 19, 1977]

§ 80.2 Definitions.

As used in this part:

(a) *Act* means the Clean Air Act, as amended (42 U.S.C. 1857 *et seq.*).

(b) *Administrator* means the Administrator of the Environmental Protection Agency.

(c) *Gasoline* means any fuel sold in any State[1] for use in motor vehicles and motor vehicle engines, and commonly or commercially known or sold as gasoline.

(d) *Previously certified gasoline*, or PCG, means gasoline or RBOB that previously has been included in a batch for purposes of complying with the standards in Subparts D, E, H, and J of this part, as appropriate.

(e) *Lead additive* means any substance containing lead or lead compounds.

(f) *Previously designated diesel fuel* or *PDD* means diesel fuel that has been previously designated and included by a refiner or importer in a batch for purposes of complying with the standards and requirements of subpart I of this part.

(g) *Unleaded gasoline* means gasoline which is produced without the use of any lead additive and which contains not more than 0.05 gram of lead per gallon and not more than 0.005 gram of phosphorus per gallon.

(h) *Refinery* means any facility, including but not limited to, a plant, tanker truck, or vessel where gasoline or diesel fuel is produced, including any facility at which blendstocks are combined to produce gasoline or diesel fuel, or at which blendstock is added to gasoline or diesel fuel.

(i) *Refiner* means any person who owns, leases, operates, controls, or supervises a refinery.

(j) *Retail outlet* means any establishment at which gasoline, diesel fuel, methanol, natural gas or liquified petroleum gas is sold or offered for sale for use in motor vehicles or nonroad engines, including locomotive engines or marine engines.

(k) *Retailer* means any person who owns, leases, operates, controls, or supervises a retail outlet.

(l) *Distributor* means any person who transports or stores or causes the transportation or storage of gasoline or diesel fuel at any point between any gasoline or diesel fuel refinery or importer's facility and any retail outlet or wholesale purchaser-consumer's facility.

(m) *Lead additive manufacturer* means any person who produces a lead additive or sells a lead additive under his own name.

(n) *Reseller* means any person who purchases gasoline or diesel fuel identified by the corporate, trade, or brand name of a refiner from such refiner or a distributor and resells or transfers it to retailers or wholesale purchaser-consumers displaying the refiner's brand, and whose assets or facilities are not substantially owned, leased, or controlled by such refiner.

[1] *State* means a State, the District of Columbia, the Commonwealth of Puerto Rico, the Virgin Islands, Guam, American Samoa and the Commonwealth of the Northern Mariana Islands.

(o) *Wholesale purchaser-consumer* means any person that is an ultimate consumer of gasoline, diesel fuel, methanol, natural gas, or liquified petroleum gas and which purchases or obtains gasoline, diesel fuel, natural gas or liquified petroleum gas from a supplier for use in motor vehicles or nonroad engines, including locomotive engines or marine engines and, in the case of gasoline, diesel fuel, methanol or liquified petroleum gas, receives delivery of that product into a storage tank of at least 550-gallon capacity substantially under the control of that person.

(p)–(q) [Reserved]

(r) *Importer* means a person who imports gasoline, gasoline blending stocks or components, or diesel fuel from a foreign country into the United States (including the Commonwealth of Puerto Rico, the Virgin Islands, Guam, American Samoa, and the Northern Mariana Islands).

(s) *Gasoline blending stock, blendstock, or component* means any liquid compound which is blended with other liquid compounds to produce gasoline.

(t) *Carrier* means any distributor who transports or stores or causes the transportation or storage of gasoline or diesel fuel without taking title to or otherwise having any ownership of the gasoline or diesel fuel, and without altering either the quality or quantity of the gasoline or diesel fuel.

(u) *Ethanol blending plant* means any refinery at which gasoline is produced solely through the addition of ethanol to gasoline, and at which the quality or quantity of gasoline is not altered in any other manner.

(v) *Ethanol blender* means any person who owns, leases, operates, controls, or supervises an ethanol blending plant.

(w) *Cetane index* or *''Calculated cetane index''* is a number representing the ignition properties of diesel fuel oils from API gravity and mid-boiling point as determined by ASTM standard method D 976–80, entitled ''Standard Methods for Calculated Cetane Index of Distillate Fuels''. ASTM test method D 976–80 is incorporated by reference. This incorporation by reference was approved by the Director of the Federal Register in accordance with 5 U.S.C. 552(a) and 1 CFR part 51. A copy may be obtained from the American Society for Testing and Materials, 1916 Race Street, Philadelphia, PA 19103. A copy may be inspected at the Air Docket Section (A–130), Room M–1500, U.S. Environmental Protection Agency, Docket No. A–86–03, 401 M Street SW., Washington, DC 20460 or at the National Archives and Records Administration (NARA). For information on the availability of this material at NARA, call 202–741–6030, or go to: *http://www.archives.gov/federal_register/code_of_federal_regulations/ibr_locations.html.*

(x) *Diesel fuel* means any fuel sold in any State or Territory of the United States and suitable for use in diesel engines, and that is—

(1) A distillate fuel commonly or commercially known or sold as No. 1 diesel fuel or No. 2 diesel fuel;

(2) A non-distillate fuel other than residual fuel with comparable physical and chemical properties (*e.g.*, biodiesel fuel); or

(3) A mixture of fuels meeting the criteria of paragraphs (1) and (2) of this definition.

(y) *Motor vehicle diesel fuel* means any diesel fuel or other distillate fuel that is used, intended for use, or made available for use in motor vehicles or motor vehicle engines.

(z) *Aromatic content* is the aromatic hydrocarbon content in volume percent as determined by ASTM standard test method D1319–03 $^{\varepsilon 1}$, entitled, ''Standard Test Method for Hydrocarbon Types in Liquid Petroleum Products by Fluorescent Indicator Adsorption''. ASTM standard test method D1319–03$^{\varepsilon 1}$, approved November 1, 2003, is incorporated by reference. This incorporation by reference was approved by the Director of the Federal Register in accordance 5 U.S.C. 552(a) and 1 CFR part 51. Copies may be obtained from the American Society for Testing and Materials, 100 Barr Harbor Dr., West Conshohocken, PA 19428–2959, or by contacting ASTM customer service at 610–832–9585, or by contacting the e-mail address of *service@astm.org* from the ASTM Web site of *http://www.astm.org*. For further information on this test method, please contact the Environmental Protection Agency at 734–214–4582. Copies may be inspected at

the Air Docket, EPA/DC, EPA West, Room B102, 1301 Constitution Ave., NW., Washington, DC, or at the National Archives and Records Administration (NARA). The telephone number for the Air Docket Public Reading Room is (202) 566–1742. For information on the availability of this material at NARA, call 202–741–6030 or go to: *http://www.archives.gov/federal_register/code_of_federal_regulations/ibr_locations.html.*

(aa) [Reserved]

(bb) *Sulfur percentage* is the percentage of sulfur in diesel fuel by weight, as determined using the applicable sampling and testing methodologies set forth in § 80.580.

(cc) *Designated Volatility Nonattainment Area* means any area designated as being in nonattainment with the National Ambient Air Quality Standard for ozone pursuant to rulemaking under section 107(d)(4)(A)(ii) of the Clean Air Act.

(dd) *Designated Volatility Attainment Area* means an area not designated as being in nonattainment with the National Ambient Air Quality Standard for ozone pursuant to rulemaking under section 107(d)(4)(A)(ii) of the Clean Air Act.

(ee) *Reformulated gasoline* means any gasoline whose formulation has been certified under § 80.40, and which meets each of the standards and requirements prescribed under § 80.41.

(ff) *Conventional gasoline* means any gasoline which has not been certified under § 80.40.

(gg) *Batch of gasoline* means a quantity of gasoline that is homogeneous with regard to those properties that are specified for conventional or reformulated gasoline.

(hh) *Covered area* means each of the geographic areas specified in § 80.70 in which only reformulated gasoline may be sold or dispensed to ultimate consumers.

(ii) *Reformulated gasoline credit* means the unit of measure for the paper transfer of benzene content resulting from reformulated gasoline which contains less than 0.95 volume percent benzene.

(jj) *Oxygenate* means any substance which, when added to gasoline, increases the oxygen content of that gasoline. Lawful use of any of the substances or any combination of these substances requires that they be ''substantially similar'' under section 211(f)(1) of the Clean Air Act, or be permitted under a waiver granted by the Administrator under the authority of section 211(f)(4) of the Clean Air Act.

(kk) *Reformulated gasoline blendstock for oxygenate blending, or RBOB* means a petroleum product which, when blended with a specified type and percentage of oxygenate, meets the definition of reformulated gasoline, and to which the specified type and percentage of oxygenate is added other than by the refiner or importer of the RBOB at the refinery or import facility where the RBOB is produced or imported.

(ll) *Oxygenate blending facility* means any facility (including a truck) at which oxygenate is added to gasoline or blendstock, and at which the quality or quantity of gasoline is not altered in any other manner except for the addition of deposit control additives.

(mm) *Oxygenate blender* means any person who owns, leases, operates, controls, or supervises an oxygenate blending facility, or who owns or controls the blendstock or gasoline used or the gasoline produced at an oxygenate blending facility.

(nn) [Reserved]

(oo) *Liquefied petroleum gas* means a liquid hydrocarbon fuel that is stored under pressure and is composed primarily of species that are gases at atmospheric conditions (temperature = 25 °C and pressure = 1 atm), excluding natural gas.

(pp) *Control area* means a geographic area in which only oxygenated gasoline under the oxygenated gasoline program may be sold or dispensed, with boundaries determined by section 211(m) of the Act.

(qq) *Control period* means the period during which oxygenated gasoline must be sold or dispensed in any control area, pursuant to section 211(m)(2) of the Act.

(rr) *Oxygenated gasoline* means gasoline which contains a measurable amount of oxygenate.

(ss) *Tank truck* means a truck and/or trailer used to transport or cause the transportation of gasoline or diesel

fuel, that meets the definition of motor vehicle in section 216(2) of the Act.

(tt) *Natural gas* means a fuel whose primary constituent is methane.

(uu) *Methanol* means any fuel sold for use in motor vehicles and commonly known or commercially sold as methanol or MXX, where XX is the percent methanol (CH_3OH) by volume.

(vv) *Opt-in area*. An area which becomes a covered area under § 80.70 pursuant to section 211(k)(6) of the Clean Air Act.

(ww) *Gasoline Treated as Blendstock, or GTAB*, means imported gasoline that is excluded from the import facility's compliance calculations, but is treated as blendstock in a related refinery that includes the GTAB in its refinery compliance calculations.

(xx) *Diesel fuel additive* means any substance not composed solely of carbon and/or hydrogen, or of diesel blendstocks, that is added to, intended to be added to, used in, or offered for use in motor vehicle diesel fuel or NRLM diesel fuel or in diesel motor vehicle or diesel NRLM engine fuel systems subsequent to the production of diesel fuel by processing crude oil from refinery processing units.

(yy)–(zz) [Reserved]

(aaa) *Distillate fuel* means diesel fuel and other petroleum fuels that can be used in engines that are designed for diesel fuel. For example, jet fuel, heating oil, kerosene, No. 4 fuel, DMX, DMA, DMB, and DMC are distillate fuels; and natural gas, LPG, gasoline, and residual fuel are not distillate fuels. Blends containing residual fuel may be distillate fuels.

(bbb) *Residual fuel* means a petroleum fuel that can only be used in diesel engines if it is preheated before injection. For example, No. 5 fuels, No. 6 fuels, and RM grade marine fuels are residual fuels. Note: Residual fuels do not necessarily require heating for storage or pumping.

(ccc) *Heating oil* means any #1, #2, or non-petroleum diesel blend that is sold for use in furnaces, boilers, and similar applications and which is commonly or commercially known or sold as heating oil, fuel oil, and similar trade names, and that is not jet fuel, kerosene, or MVNRLM diesel fuel.

(ddd) *Jet fuel* means any distillate fuel used, intended for use, or made available for use in aircraft.

(eee) *Kerosene* means any No.1 distillate fuel commonly or commercially sold as kerosene.

(fff) *#1D* means the distillate fuel classification relating to ''No. 1–D'' diesel fuels as described in ASTM D 975–04. The Director of the Federal Register approved the incorporation by reference of ASTM D 975–04, Standard Specification for Diesel Fuel Oils, as prescribed in 5 U.S.C. 552(a) and 1 CFR part 51. Anyone may purchase copies of this standard from the American Society for Testing and Materials, 100 Barr Harbor Dr., West Conshohocken, PA 19428. Anyone may inspect copies at the U.S. EPA, Air and Radiation Docket and Information Center, 1301 Constitution Ave., NW., Room B102, EPA West Building, Washington, DC 20460 or at the National Archives and Records Administration (NARA). For information on the availability of this material at NARA, call 202–741–6030, or go to: *http://www.archives.gov/federal_register/code_of_federal_regulations/ibr_locations.html*.

(ggg) *#2D* means the distillate fuel classification relating to ''No. 2–D'' diesel fuels as described in ASTM D 975–04.

(hhh)–(jjj) [Reserved]

(kkk) *Nonroad diesel engine* means an engine that is designed to operate with diesel fuel that meets the definition of nonroad engine in 40 CFR 1068.30, including locomotive and marine diesel engines.

(lll) *Locomotive engine* means an engine used in a locomotive as defined under 40 CFR 92.2.

(mmm) *Marine engine* and *Category 3* have the meanings given under 40 CFR 94.2.

(nnn) *Nonroad, locomotive, or marine (NRLM) diesel fuel* means any diesel fuel or other distillate fuel that is used, intended for use, or made available for use, as a fuel in any nonroad diesel engines, including locomotive and marine diesel engines, except the following: Distillate fuel with a T90 at or above 700 °F that is used only in Category 2 and 3 marine engines is not NRLM diesel fuel, and ECA marine fuel

is not NRLM diesel fuel (note that fuel that conforms to the requirements of NRLM diesel fuel is excluded from the definition of ''ECA marine fuel'' in this section without regard to its actual use). Use the distillation test method specified in 40 CFR 1065.1010 to determine the T90 of the fuel. NR diesel fuel and LM diesel fuel are subcategories of NRLM diesel fuel.

(1) Any diesel fuel that is sold for use in stationary engines that are required to meet the requirements of § 80.510(a) and/or (b), when such provisions are applicable to nonroad engines, shall be considered NRLM diesel fuel.

(2) [Reserved]

(ooo) *Nonroad (NR) diesel fuel* means any NRLM diesel fuel that is not ''locomotive or marine (LM) diesel fuel.''

(ppp) *Locomotive or marine (LM) diesel fuel* means any diesel fuel or other distillate fuel that is used, intended for use, or made available for use, as a fuel in locomotive or marine diesel engines, except for the following fuels:

(1) Fuel that is also used, intended for use, or made available for use in motor vehicle engines or nonroad engines other than locomotive and marine diesel engines is not LM diesel fuel.

(2) Distillate fuel with a T90 greater than 700 °F that is used only in Category 2 and 3 marine engines is not LM diesel fuel. Use the distillation test method specified in 40 CFR 1065.1010 to determine the T90 of the fuel.

(qqq) *MVNRLM diesel fuel* means any diesel fuel or other distillate fuel that meets the definition of motor vehicle (MV) or nonroad, locomotive, or marine (NRLM) diesel fuel. Motor vehicle diesel fuel, NRLM diesel fuel, NR diesel fuel, and LM diesel fuel are subcategories of MVNRLM diesel fuel.

(rrr) *Solvent yellow 124* means N-ethyl-N-[2-[1-(2-methylpropoxy)ethoxyl]-4-phenylazo]-benzeneamine.

(sss) *Non-petroleum diesel (NP diesel)* means a diesel fuel that contains at least 80 percent mono-alkyl esters of long chain fatty acids derived from vegetable oils or animal fats.

(ttt) *ECA marine fuel* is diesel, distillate, or residual fuel that meets the criteria of paragraph (ttt)(1) of this section, but not the criteria of paragraph (ttt)(2) of this section.

(1) All diesel, distillate, or residual fuel used, intended for use, or made available for use in Category 3 marine vessels while the vessels are operating within an Emission Control Area (ECA) is ECA marine fuel, unless it meets the criteria of paragraph (ttt)(2) of this section.

(2) ECA marine fuel does not include any of the following fuel:

(i) Fuel that is allowed by 40 CFR part 1043 to exceed the fuel sulfur limits for operation in an ECA (such as fuel used by excluded vessels or vessels equipped with equivalent emission controls in conformance with 40 CFR 1043.55).

(ii) Fuel that conforms fully to the requirements of this part for NRLM diesel fuel (including being designated as NRLM).

(iii) Fuel used, or made available for use, in any diesel engines not installed on a Category 3 marine vessel.

(uuu) *Category 3 marine vessels*, for the purposes of this part 80, are vessels that are propelled by engines meeting the definition of ''Category 3'' in 40 CFR part 1042.901.

(Sec. 211, (Sec. 223, Pub. L. 95-95, 91 Stat. 764, 42 U.S.C. 7545(g)) and sec. 301(a) 42 U.S.C. 7602(a), formerly 42 U.S.C. 1857g(a)) of the Clean Air Act, as amended)

[38 FR 1255, Jan. 10, 1973]

EDITORIAL NOTE: For FEDERAL REGISTER citations affecting § 80.2, see the List of CFR Sections Affected, which appears in the Finding Aids section of the printed volume and on GPO Access.

§ 80.3 Test methods.

The lead and phosphorus content of gasoline shall be determined in accordance with test methods set forth in the appendices to this part.

[47 FR 765, Jan. 7, 1982]

§ 80.4 Right of entry; tests and inspections.

The Administrator or his authorized representative, upon presentation of appropriate credentials, shall have a right to enter upon or through any refinery, retail outlet, wholesale purchaser-consumer facility, or detergent manufacturer facility; or the premises

or property of any gasoline or detergent distributor, carrier, or importer; or any place where gasoline or detergent is stored; and shall have the right to make inspections, take samples, obtain information and records, and conduct tests to determine compliance with the requirements of this part.

[61 FR 35356, July 5, 1996]

§ 80.5 Penalties.

Any person who violates these regulations shall be liable to the United States for a civil penalty of not more than the sum of $25,000 for every day of such violation and the amount of economic benefit or savings resulting from the violation. Any violation with respect to a regulation proscribed under section 211(c), (k), (l) or (m) of the Act which establishes a regulatory standard based upon a multi-day averaging period shall constitute a separate day of violation for each and every day in the averaging period. Civil penalties shall be assessed in accordance with section 205(b) and (c) of the Act.

[58 FR 65554, Dec. 15, 1993]

§ 80.7 Requests for information.

(a) When the Administrator, the Regional Administrator, or their delegates have reason to believe that a violation of section 211(c) or section 211(n) of the Act and the regulations thereunder has occurred, they may require any refiner, distributor, wholesale purchaser-consumer, or retailer to report the following information regarding receipt, transfer, delivery, or sale of gasoline represented to be unleaded gasoline and to allow the reproduction of such information at all reasonable times.

(1) For any bulk shipment of gasoline represented to be unleaded gasoline which is transferred, sold, or delivered within the previous 6 months by a refiner or a distributor to a distributor, wholesale purchaser-consumer or a retail outlet, the refiner or distributor shall maintain and provide the following information as applicable:

(i) Business or corporate name and address of distributors, wholesale purchaser-consumers or retail outlets to which the gasoline has been transferred, sold, or delivered.

(ii) Quantity of gasoline involved.

(iii) Date of delivery.

(iv) Storage location of gasoline prior to transit via delivery vessel (e.g., location of a bulk terminal).

(v) Business or corporate name and address of the person who delivered the gasoline.

(vi) Identification of delivery vessel (e.g., truck number). This information shall be supplied by the person in paragraph (a)(1)(v) of this section who performed the delivery, e.g., common or contract carrier.

(2) For any bulk shipment of gasoline represented to be unleaded gasoline received by a retail outlet or a wholesale-purchaser-consumer facility within the previous 6 months, whether by purchase or otherwise, the retailer or wholesale purchaser-consumer shall maintain accessibility to and provide the following information:

(i) Business or corporate name and address of the distributor.

(ii) Quantity of gasoline received.

(iii) Date of receipt.

(b) Upon request by the Administrator, the Regional Administrator, or their delegates, any retailer shall provide documentation of his annual total sales volume in gallons of gasoline for each retail outlet for each calendar year beginning with 1971.

(c) Any refiner, distributor, wholesale purchaser-consumer, retailer, or importer shall provide such other information as the Administrator or his authorized representative may reasonably require to enable him to determine whether such refiner, distributor, wholesale purchaser-consumer, retailer, or importer has acted or is acting in compliance with sections 211(c) and 211(n) of the Act and the regulations thereunder and shall, upon request of the Administrator or his authorized representative, produce and allow reproduction of any relevant records at all reasonable times. Such information may include but is not limited to records of unleaded gasoline inventory at a wholesale purchaser-consumer facility or a retail outlet, unleaded pump meter readings at a wholesale purchaser-consumer facility or a retail outlet, and receipts providing the date of acquisition of signs, labels, and nozzles required by § 80.22.

No person shall be required to furnish information requested under this paragraph if he can establish that such information is not maintained in the normal course of his business.

(Secs. 211, 301, Clean Air Act, as amended (42 U.S.C. 1857f–6c, 1857g))

[40 FR 36336, Aug. 20, 1975, as amended at 42 FR 45307, Sept. 9, 1977; 47 FR 49332, Oct. 29, 1982; 61 FR 3837, Feb. 2, 1996]

§ 80.8 Sampling methods for gasoline and diesel fuel.

The sampling methods specified in this section shall be used to collect samples of gasoline and diesel fuel for purposes of determining compliance with the requirements of this part.

(a) *Manual sampling*. Manual sampling of tanks and pipelines shall be performed according to the applicable procedures specified in American Society for Testing and Materials (ASTM) method D 4057–95(2000), entitled ''Standard Practice for Manual Sampling of Petroleum and Petroleum Products.''

(b) *Automatic sampling*. Automatic sampling of petroleum products in pipelines shall be performed according to the applicable procedures specified in ASTM method D 4177–95(2000), entitled ''Standard Practice for Automatic Sampling of Petroleum and Petroleum Products.''

(c) *Sampling and sample handling for volatility measurement*. Samples to be analyzed for Reid Vapor Pressure (RVP) shall be collected and handled according to the applicable procedures in ASTM method D 5842–95(2000), entitled ''Standard Practice for Sampling and Handling of Fuels for Volatility Measurement.''

(d) *Sample compositing*. Composite samples shall be prepared using the applicable procedures in ASTM method D 5854–96(2000), entitled ''Standard Practice for Mixing and Handling of Liquid Samples of Petroleum and Petroleum Products.''

(e) *Incorporations by reference*. ASTM standard practices D 4057–95(2000), D 4177–95(2000), D 5842–95(2000), and D 5854–96(2000), are incorporated by reference. These incorporations by reference were approved by the Director of the Federal Register in accordance with 5 U.S.C. 552(a) and 1 CFR part 51. Copies may be obtained from the American Society for Testing and Materials, 100 Barr Harbor Dr., West Conshohocken, PA 19428–2959. Copies may be inspected at the Air Docket Section (LE–131), room M–1500, U.S. Environmental Protection Agency, Docket No. A–97–03, 401 M Street, SW., Washington, DC 20460, or at the National Archives and Records Administration (NARA). For information on the availability of this material at NARA, call 202–741–6030, or go to: *http://www.archives.gov/federal_register/code_of_federal_regulations/ibr_locations.html.*

[67 FR 8736, Feb. 26, 2002]

§ 80.9 Rounding a test result for determining conformance with a fuels standard.

(a) For purposes of determining compliance with the fuel standards of 40 CFR part 80, a test result will be rounded to the nearest unit of significant digits specified in the applicable fuel standard in accordance with the rounding method described in the ASTM standard practice, ASTM E 29–02$^{\epsilon 1}$, entitled, ''Standard Practice for Using Significant Digits in Test Data to Determine Conformance with Specifications''.

(b) ASTM standard practice, E 29–02$^{\epsilon 1}$ is incorporated by reference. This incorporation by reference was approved by the Director of the Federal Register in accordance with 5 U.S.C. 552(a) and 1 CFR part 51. A copy may be obtained from the American Society for Testing and Materials, 100 Barr Harbor Dr., West Conshohocken, PA 19428–2959. Copies may be inspected at the Air Docket, EPA/DC, EPA West, Room B102, 1301 Constitution Ave., NW., Washington, DC, or at the National Archives and Records Administration (NARA). For information on the availability of this material at NARA, call 202–741–6030 or go to: *http://www.archives.gov/federal_register/code_of_federal_regulations/ibr_locations.html.*

[71 FR 16499, Apr. 3, 2006]

Subpart B—Controls and Prohibitions

§§ 80.20–80.21 [Reserved]

§ 80.22 Controls and prohibitions.

(a) After December 31, 1995, no person shall sell, offer for sale, supply, offer for supply, dispense, transport, or introduce into commerce gasoline represented to be unleaded gasoline unless such gasoline meets the defined requirements for unleaded gasoline in § 80.2(g); nor shall he dispense, or cause or allow the gasoline other than unleaded gasoline to be dispensed into any motor vehicle which is equipped with a gasoline tank filler inlet which is designed for the introduction of unleaded gasoline.

(b) After December 31, 1995, no person shall sell, offer for sale, supply, offer for supply, dispense, transport, or introduce into commerce for use as fuel in any motor vehicle (as defined in Section 216(2) of the Clean Air Act, 42 U.S.C. 7550(2)), any gasoline which is produced with the use of lead additives or which contains more than 0.05 gram of lead per gallon.

(c)–(e) [Reserved]

(f) Every retailer and wholesale purchaser-consumer shall equip all gasoline pumps from which gasoline is dispensed into motor vehicles with a nozzle spout that meets all the following specifications:

(1) The outside diameter of the terminal end shall not be greater than 0.840 inches (2.134 centimeters).

(2) The terminal end shall have a straight section of at least 2.5 inches (6.34 centimeters).

(3) The retaining spring shall terminate at least 3.0 inches (7.6 centimeters) from the terminal end.

(g) The specifications in this paragraph (g) apply for any new nozzle installations used primarily for dispensing gasoline into marine vessels beginning January 1, 2009. (Note that nozzles meeting the specifications of this paragraph (g) also meet the specifications of paragraph (f) of this section. Note also that the additional specifications in this paragraph (g) do not apply for nozzles used primarily for dispensing gasoline into motor vehicles rather than marine vessels.) Every retailer and wholesale purchaser-consumer shall use nozzles meeting these specifications for any new construction or for nozzle replacements. This does not require replacement of existing nozzles for refueling marine vessels before they would be replaced for other reasons. The following specifications apply to spouts on new or replacement nozzles intended for dispensing gasoline into marine vessels:

(1) The outside diameter of the terminal end shall have a diameter of 0.824 ± 0.017 inches (2.093 ± 0.043 centimeters).

(2) The spout shall include an aspirator hole for automatic shutoff positioned with a center that is 0.67 ± 0.05 inches (1.70 ± 0.13 centimeters) from the terminal end of the spout.

(3) The terminal end shall have a straight section of at least 2.5 inches (6.34 centimeters) with no holes or grooves other than the aspirator hole.

(4) The retaining spring (if applicable) shall terminate at least 3.0 inches (7.6 centimeters) from the terminal end.

(h)–(i) [Reserved]

(j) After July 1, 1996 every retailer and wholesale purchaser-consumer handling over 10,000 gallons (37,854 liters) of fuel per month shall limit each nozzle from which gasoline or methanol is introduced into motor vehicles to a maximum fuel flow rate not to exceed 10 gallons per minute (37.9 liters per minute). The flow rate may be controlled through any means in the pump/dispenser system, provided the nozzle flow rate does not exceed 10 gallons per minute (37.9 liters per minute). After January 1, 1998 this requirement applies to every retailer and wholesale purchaser-consumer. Any dispensing pump that is dedicated exclusively to heavy-duty vehicles, boats, or airplanes is exempt from this requirement.

[38 FR 1255, Jan. 10, 1973, as amended at 39 FR 16125, May 17, 1974; 39 FR 43283, Dec. 12, 1974; 48 FR 4287, Jan. 31, 1983; 56 FR 13768, Apr. 4, 1991; 58 FR 16019, Mar. 24, 1993; 61 FR 3837, Feb. 2, 1996; 61 FR 33039, June 26, 1996; 73 FR 59178, Oct. 8, 2008]

§ 80.23 Liability for violations.

Liability for violations of paragraphs (a) and (b) of § 80.22 shall be determined as follows:

(a)(1) Where the corporate, trade, or brand name of a gasoline refiner or any of its marketing subsidiaries appears on the pump stand or is displayed at the retail outlet or wholesale purchaser-consumer facility from which the gasoline was sold, dispensed, or offered for sale, the retailer or wholesale purchaser-consumer, the reseller (if any), and such gasoline refiner shall be deemed in violation. Except as provided in paragraph (b)(2) of this section, the refiner shall be deemed in violation irrespective of whether any other refiner, distributor, retailer, or wholesale purchaser-consumer or the employee or agent of any refiner, distributor, retailer, or wholesale purchaser-consumer may have caused or permitted the violation.

(2) Where the corporate, trade, or brand name of a gasoline refiner or any of its marketing subsidiaries does not appear on the pump stand and is not displayed at the retail outlet or wholesale purchaser-consumer facility from which the gasoline was sold, dispensed, or offered for sale, the retailer or wholesale purchaser-consumer and any distributor who sold that person gasoline contained in the storage tank which supplied that pump at the time of the violation shall be deemed in violation.

(b)(1) In any case in which a retailer or wholesale purchaser-consumer and any gasoline refiner or distributor would be in violation under paragraph (a) (1) or (2) of this section, the retailer or wholesale purchaser-consumer shall not be liable if he can demonstrate that the violation was not caused by him or his employee or agent.

(2) In any case in which a retailer or wholesale purchaser-consumer, a reseller (if any), and any gasoline refiner would be in violation under paragraph (a)(1) of this section, the refiner shall not be deemed in violation if he can demonstrate:

(i) That the violation was not caused by him or his employee or agent, and

(ii) That the violation was caused by an act in violation of law (other than the Act or this part), or an act of sabotage, vandalism, or deliberate commingling of gasoline which is produced with the use of lead additives or phosphorus additives with unleaded gasoline, whether or not such acts are violations of law in the jurisdiction where the violation of the requirements of this part occurred, or

(iii) That the violation was caused by the action of a reseller or a retailer supplied by such reseller, in violation of a contractual undertaking imposed by the refiner on such reseller designed to prevent such action, and despite reasonable efforts by the refiner (such as periodic sampling) to insure compliance with such contractual obligation, or

(iv) That the violation was caused by the action of a retailer who is supplied directly by the refiner (and not by a reseller), in violation of a contractual undertaking imposed by the refiner on such retailer designed to prevent such action, and despite reasonable efforts by the refiner (such as periodic sampling) to insure compliance with such contractual obligation, or

(v) That the violation was caused by the action of a distributor subject to a contract with the refiner for transportation of gasoline from a terminal to a distributor, retailer or wholesale purchaser-consumer, in violation of a contractual undertaking imposed by the refiner on such distributor designed to prevent such action, and despite reasonable efforts by the refiner (such as periodic sampling) to insure compliance with such contractual obligation, or

(vi) That the violation was caused by a distributor (such as a common carrier) not subject to a contract with the refiner but engaged by him for transportation of gasoline from a terminal to a distributor, retailer or wholesale purchaser-consumer, despite reasonable efforts by the refiner (such as specification or inspection of equipment) to prevent such action, or

(vii) That the violation occurred at a wholesale purchaser-consumer facility: *Provided, however,* That if such wholesale purchaser-consumer was supplied by a reseller, the refiner must demonstrate that the violation could not have been prevented by such reseller's compliance with a contractual undertaking imposed by the refiner on such reseller as provided in paragraph (b)(2)(iii) of this section.

(viii) In paragraphs (b)(2)(ii) through (vi) hereof, the term ''was caused'' means that the refiner must demonstrate by reasonably specific showings by direct or circumstantial evidence that the violation was caused or must have been caused by another.

(c) In any case in which a retailer or wholesale purchaser-consumer, a reseller, and any gasoline refiner would be in violation under paragraph (a)(1) of this section, the reseller shall not be deemed in violation if he can demonstrate that the violation was not caused by him or his employee or agent.

(d) In any case in which a retailer or wholesale purchaser-consumer and any gasoline distributor would be in violation under paragraph (a)(2) of this section, the distributor will not be deemed in violation if he can demonstrate that the violation was not caused by him or his employee or agent.

(e)(1) In any case in which a retailer or his employee or agent or a wholesale purchase-consumer or his employee or agent introduced gasoline other than unleaded gasoline into a motor vehicle which is equipped with a gasoline tank filler inlet designed for the introduction of unleaded gasoline, only the retailer or wholesale purchaser-consumer shall be deemed in violation.

(2) [Reserved]

(Secs. 211, 301 of the Clean Air Act, as amended (42 U.S.C. 1857f–6c, 1857g))

[38 FR 1255, Jan. 10, 1973, as amended at 39 FR 42360, Dec. 5, 1974; 39 FR 43284, Dec. 12, 1974; 42 FR 45307, Sept. 9, 1977; 61 FR 3837, Feb. 2, 1996]

§ 80.24 Controls applicable to motor vehicle manufacturers.

(a) [Reserved]

(b) The manufacturer of any motor vehicle equipped with an emission control device which the Administrator has determined will be significantly impaired by the use of gasoline other than unleaded gasoline shall manufacture such vehicle with each gasoline tank filler inlet having a restriction which prevents the insertion of a nozzle with a spout having a terminal end with an outside diameter of 0.930 inch (2.363 centimeters) or more and allows the insertion of a nozzle with a spout meeting the specifications of § 80.22(f)(2).

(c) A motorcycle, as defined at 40 CFR 86.402 for the applicable model year, is exempt from the requirements of paragraph (b) of this section.

[38 FR 26450, Sept. 21, 1973, as amended at 39 FR 34538, Sept. 26, 1974; 46 FR 50472, Oct. 13, 1981; 48 FR 29692, June 28, 1983; 51 FR 33731, Sept. 22, 1986; 61 FR 3838, Feb. 2, 1996; 61 FR 8221, Mar. 4, 1996; 61 FR 28766, June 6, 1996; 67 FR 36771, May 24, 2002]

§ 80.25 [Reserved]

§ 80.26 Confidentiality of information.

Information obtained by the Administrator or his representatives pursuant to this part shall be treated, in so far as its confidentiality is concerned, in accordance with the provisions of 40 CFR part 2.

[38 FR 33741, Dec. 6, 1973]

§ 80.27 Controls and prohibitions on gasoline volatility.

(a)(1) *Prohibited activities in 1991*. During the 1991 regulatory control periods, no refiner, importer, distributor, reseller, carrier, retailer or wholesale purchaser-consumer shall sell, offer for sale, dispense, supply, offer for supply, or transport gasoline whose Reid vapor pressure exceeds the applicable standard. As used in this section and § 80.28, ''applicable standard'' means the standard listed in this paragraph for the geographical area and time period in which the gasoline is intended to be dispensed to motor vehicles or, if such area and time period cannot be determined, the standard listed in this paragraph that specifies the lowest Reid vapor pressure for the year in which the gasoline is being sampled. As used in this section and § 80.28, ''regulatory control periods'' mean June 1 to September 15 for retail outlets and wholesale purchaser-consumers and May 1 to September 15 for all other facilities.

APPLICABLE STANDARDS [1]

State	May	June	July	Aug.	Sept.
Alabama	10.5	10.5	9.5	9.5	10.5

APPLICABLE STANDARDS [1]—Continued

State	May	June	July	Aug.	Sept.
Arizona:					
North of 34 degrees latitude and east of 111 degrees longitude	9.5	9.0	9.0	9.5	9.5
All areas except North of 34 degrees latitude and east of 111 degrees longitude	9.5	9.0	9.0	9.0	9.5
Arkansas	10.5	10.5	9.5	9.5	10.5
California: [2]					
North Coast	10.5	9.5	9.5	9.5	9.5
South Coast	9.5	9.5	9.5	9.5	9.5
Southeast	9.5	9.5	9.5	9.5	9.5
Interior	9.5	9.5	9.5	9.5	9.5
Colorado	10.5	9.5	9.5	9.5	9.5
Connecticut	10.5	10.5	10.5	10.5	10.5
Delaware	10.5	10.5	10.5	10.5	10.5
District of Columbia	10.5	10.5	10.5	10.5	10.5
Florida	10.5	10.5	10.5	10.5	10.5
Georgia	10.5	10.5	9.5	9.5	10.5
Idaho	10.5	10.5	10.5	10.5	10.5
Illinois:					
North of 40° Latitude	10.5	10.5	10.5	10.5	10.5
South of 40° Latitude	10.5	10.5	9.5	9.5	10.5
Indiana	10.5	10.5	10.5	10.5	10.5
Iowa	10.5	10.5	10.5	10.5	10.5
Kansas	10.5	10.5	9.5	9.5	10.5
Kentucky	10.5	10.5	10.5	10.5	10.5
Louisiana	10.5	10.5	9.5	9.5	10.5
Maine	10.5	10.5	10.5	10.5	10.5
Maryland	10.5	10.5	10.5	10.5	10.5
Massachusetts	10.5	10.5	10.5	10.5	10.5
Michigan	10.5	10.5	10.5	10.5	10.5
Minnesota	10.5	10.5	10.5	10.5	10.5
Mississippi	10.5	10.5	9.5	9.5	10.5
Missouri	10.5	10.5	9.5	9.5	10.5
Montana	10.5	10.5	10.5	10.5	10.5
Nebraska	10.5	10.5	10.5	10.5	10.5
Nevada:					
North of 38° Latitude	10.5	9.5	9.5	9.5	9.5
South of 38° Latitude	9.5	9.5	9.5	9.5	9.5
New Hampshire	10.5	10.5	10.5	10.5	10.5
New Jersey	10.5	10.5	10.5	10.5	10.5
New Mexico:					
North of 34° Latitude	9.5	9.0	9.0	9.5	9.5
South of 34° Latitude	9.5	9.0	9.0	9.0	9.5
New York	10.5	10.5	10.5	10.5	10.5
North Carolina	10.5	10.5	9.5	9.5	10.5
North Dakota	10.5	10.5	10.5	10.5	10.5
Ohio	10.5	10.5	10.5	10.5	10.5
Oklahoma	10.5	9.5	9.5	9.5	9.5
Oregon:					
East of 122° Longitude	10.5	10.5	10.5	10.5	10.5
West of 122° Longitude	10.5	10.5	10.5	10.5	10.5
Pennsylvania	10.5	10.5	10.5	10.5	10.5
Rhode Island	10.5	10.5	10.5	10.5	10.5
South Carolina	10.5	10.5	9.5	9.5	10.5
South Dakota	10.5	10.5	10.5	10.5	10.5
Tennessee	10.5	10.5	9.5	9.5	10.5
Texas:					
East of 99° Longitude	9.5	9.0	9.0	9.0	9.5
West of 99° Longitude	9.5	9.0	9.0	9.0	9.5
Utah	10.5	9.5	9.5	9.5	9.5
Vermont	10.5	10.5	10.5	10.5	10.5
Virginia	10.5	10.5	10.5	10.5	10.5
Washington:					
East of 122° Longitude	10.5	10.5	10.5	10.5	10.5
West of 122° Longitude	10.5	10.5	10.5	10.5	10.5
West Virginia	10.5	10.5	10.5	10.5	10.5
Wisconsin	10.5	10.5	10.5	10.5	10.5
Wyoming	10.5	10.5	10.5	10.5	10.5

[1] Standards are expressed in pounds per square inch (psi).
[2] California areas include the following counties:
North Coast—Alameda, Contra Costa, Del Norte, Humbolt, Lake, Marin, Mendocino, Monterey, Napa, San Benito, San Francisco, San Mateo, Santa Clara, Santa Cruz, Solano, Sonoma, and Trinity.

Interior—Lassen, Modoc, Plumas, Sierra, Siskiyou, Alpine, Amador, Butte, Calaveras, Colusa, El Dorado, Fresno, Glenn, Kern (except that portion lying east of the Los Angeles County Aqueduct), Kings, Madera, Mariposa, Merced, Placer, Sacramento, San Joaquin, Shasta, Stanislaus, Sutter, Tehama, Tulare, Tuolumne, Yolo, Yuba, and Nevada.

South Coast—Orange, San Diego, San Luis Obispo, Santa Barbara, Ventura, and Los Angeles (except that portion north of the San Gabriel mountain range and east of the Los Angeles County Aqueduct).

Southeast—Imperial, Riverside, San Bernardino, Los Angeles (that portion north of the San Gabriel mountain range and east of the Los Angeles County Aqueduct), Mono, Inyo, and Kern (that portion lying east of the Los Angeles County Aqueduct).

(2) *Prohibited activities in 1992 and beyond.* During the 1992 and later high ozone seasons no person, including without limitation, no retailer or wholesale purchaser-consumer, and during the 1992 and later regulatory control periods, no refiner, importer, distributor, reseller, or carrier shall sell, offer for sale, dispense, supply, offer for supply, transport or introduce into commerce gasoline whose Reid vapor pressure exceeds the applicable standard. As used in this section and § 80.28, ''applicable standard'' means:

(i) 9.0 psi for all designated volatility attainment areas; and

(ii) The standard listed in this paragraph for the state and time period in which the gasoline is intended to be dispensed to motor vehicles for any designated volatility nonattainment area within such State or, if such area and time period cannot be determined, the standard listed in this paragraph that specifies the lowest Reid vapor pressure for the year in which the gasoline is sampled. Designated volatility attainment and designated volatility nonattainment areas and their exact boundaries are described in 40 CFR part 81, or such part as shall later be designated for that purpose. As used in this section and § 80.27, ''high ozone season'' means the period from June 1 to September 15 of any calendar year and ''regulatory control period'' means the period from May 1 to September 15 of any calendar year.

APPLICABLE STANDARDS [1] 1992 AND SUBSEQUENT YEARS

State	May	June	July	August	September
Alabama	9.0	7.8	7.8	7.8	7.8
Arizona	9.0	7.8	7.8	7.8	7.8
Arkansas	9.0	7.8	7.8	7.8	7.8
California	9.0	7.8	7.8	7.8	7.8
Colorado [2]	9.0	7.8	7.8	7.8	7.8
Connecticut	9.0	9.0	9.0	9.0	9.0
Delaware	9.0	9.0	9.0	9.0	9.0
District of Columbia	9.0	7.8	7.8	7.8	7.8
Florida	9.0	7.8	7.8	7.8	7.8
Georgia	9.0	7.8	7.8	7.8	7.8
Idaho	9.0	9.0	9.0	9.0	9.0
Illinois	9.0	9.0	9.0	9.0	9.0
Indiana	9.0	9.0	9.0	9.0	9.0
Iowa	9.0	9.0	9.0	9.0	9.0
Kansas	9.0	7.8	7.8	7.8	7.8
Kentucky	9.0	9.0	9.0	9.0	9.0
Louisiana:					
Grant Parish [4]	9.0	9.0	9.0	9.0	9.0
All other volatility nonattainment areas	9.0	7.8	7.8	7.8	7.8
Maine	9.0	9.0	9.0	9.0	9.0
Maryland	9.0	7.8	7.8	7.8	7.8
Massachusetts	9.0	9.0	9.0	9.0	9.0
Michigan	9.0	9.0	9.0	9.0	9.0
Minnesota	9.0	9.0	9.0	9.0	9.0
Mississippi	9.0	7.8	7.8	7.8	7.8
Missouri	9.0	7.8	7.8	7.8	7.8
Montana	9.0	9.0	9.0	9.0	9.0
Nebraska	9.0	9.0	9.0	9.0	9.0
Nevada	9.0	7.8	7.8	7.8	7.8
New Hampshire	9.0	9.0	9.0	9.0	9.0
New Jersey	9.0	9.0	9.0	9.0	9.0
New Mexico	9.0	7.8	7.8	7.8	7.8
New York	9.0	9.0	9.0	9.0	9.0
North Carolina	9.0	7.8	7.8	7.8	7.8
North Dakota	9.0	9.0	9.0	9.0	9.0
Ohio	9.0	9.0	9.0	9.0	9.0
Oklahoma	9.0	7.8	7.8	7.8	7.8
Oregon	9.0	7.8	7.8	7.8	7.8

APPLICABLE STANDARDS[1] 1992 AND SUBSEQUENT YEARS—Continued

State	May	June	July	August	September
Pennsylvania	9.0	9.0	9.0	9.0	9.0
Rhode Island	9.0	9.0	9.0	9.0	9.0
South Carolina[3]	9.0	9.0	9.0	9.0	9.0
South Dakota	9.0	9.0	9.0	9.0	9.0
Tennessee:.					
Knox County	9.0	9.0	9.0	9.0	9.0
All other volatility nonattainment areas	9.0	7.8	7.8	7.8	7.8
Texas	9.0	7.8	7.8	7.8	7.8
Utah	9.0	7.8	7.8	7.8	7.8
Vermont	9.0	9.0	9.0	9.0	9.0
Virginia	9.0	7.8	7.8	7.8	7.8
Washington	9.0	9.0	9.0	9.0	9.0
West Virginia	9.0	9.0	9.0	9.0	9.0
Wisconsin	9.0	9.0	9.0	9.0	9.0
Wyoming	9.0	9.0	9.0	9.0	9.0

[1] Standards are expressed in pounds per square inch (psi).
[2] The Colorado Covered Area encompasses the Denver-Boulder-Greeley-Ft. Collins-Loveland, CO, 8-hour ozone nonattainment area (*see* 40 CFR part 81).
[3] The standard for nonattainment areas in South Carolina from June 1 until September 15 in 1992 and 1993 was 7.8 psi.
[4] The standard for Grant Parish from June 1 until September 15 in 1992 through 2007 was 7.8 psi.

(b) *Determination of compliance*. Compliance with the standards listed in paragraph (a) of this section shall be determined by the use of the sampling methodologies specified in § 80.8 and the testing methodology specified in § 80.46(c).

(c) *Liability*. Liability for violations of paragraph (a) of this section shall be determined according to the provisions of § 80.28. Where the terms refiner, importer, distributor, reseller, carrier, ethanol blender, retailer, or wholesale purchaser-consumer are expressed in the singular in § 80.28, these terms shall include the plural.

(d) *Special provisions for alcohol blends*. (1) Any gasoline which meets the requirements of paragraph (d)(2) of this section shall not be in violation of this section if its Reid vapor pressure does not exceed the applicable standard in paragraph (a) of this section by more than one pound per square inch (1.0 psi).

(2) In order to qualify for the special regulatory treatment specified in paragraph (d)(1) of this section, gasoline must contain denatured, anhydrous ethanol. The concentration of the ethanol, excluding the required denaturing agent, must be at least 9% and no more than 10% (by volume) of the gasoline. The ethanol content of the gasoline shall be determined by the use of one of the testing methodologies specified in § 80.46(g). The maximum ethanol content shall not exceed any applicable waiver conditions under section 211(f) of the Clean Air Act.

(3) Each invoice, loading ticket, bill of lading, delivery ticket and other document which accompanies a shipment of gasoline containing ethanol shall contain a legible and conspicuous statement that the gasoline being shipped contains ethanol and the percentage concentration of ethanol.

(e) *Testing exemptions*. (1)(i) Any person may request a testing exemption by submitting an application that includes all the information listed in paragraphs (e)(3), (4), (5) and (6) of this section to:

Director (6406J), Field Operations and Support Division, U.S. Environmental Protection Agency, 1200 Pennsylvania Ave., NW., Washington, DC 20460

(ii) For purposes of this section, ''testing exemption'' means an exemption from the requirements of § 80.27(a) that is granted by the Administrator for the purpose of research or emissions certification.

(2)(i) In order for a testing exemption to be granted, the applicant must demonstrate the following:

(A) The proposed test program has a purpose that constitutes an appropriate basis for exemption;

(B) The proposed test program necessitates the granting of an exemption;

(C) The proposed test program exhibits reasonableness in scope; and

(D) The proposed test program exhibits a degree of control consistent with

the purpose of the program and the Environmental Protection Agency's (EPA's) monitoring requirements.

(ii) Paragraphs (e)(3), (4), (5) and (6) of this section describe what constitutes a sufficient demonstration for each of the four elements in paragraphs (e)(2)(i) (A) through (D) of this section.

(3) An appropriate purpose is limited to research or emissions certification. The testing exemption application must include a concise statement of the purpose(s) of the testing program.

(4) With respect to the necessity that an exemption be granted, the applicant must demonstrate an inability to achieve the stated purpose in a practicable manner, during a period of the year in which the volatility regulations do not apply, or without performing or causing to be performed one or more of the prohibited activities under § 80.27(a). If any site of the proposed test program is located in an area that has been classified by the Administrator as a nonattainment area for purposes of the ozone national ambient air quality standard, the application must also demonstrate an inability to perform the test program in an area that is not so classified.

(5) With respect to reasonableness, a test program must exhibit a duration of reasonable length, effect a reasonable number of vehicles or engines, and utilize a reasonable amount of high volatility fuel. In this regard, the testing exemption application must include:

(i) An estimate of the program's duration;

(ii) An estimate of the maximum number of vehicles or engines involved in the test program;

(iii) The time or mileage duration of the test program;

(iv) The range of volatility of the fuel (expressed in Reid Vapor Pressure (RVP)) expected to be used in the test program; and

(v) The quantity of fuel which exceeds the applicable standard that is expected to be used in the test program.

(6) With respect to control, a test program must be capable of affording EPA a monitoring capability. At a minimum, the testing exemption application must also include:

(i) The technical nature of the test program;

(ii) The site(s) of the test program (including the street address, city, county, State, and zip code);

(iii) The manner in which information on vehicles and engines used in the test program will be recorded and made available to the Administrator;

(iv) The manner in which results of the test program will be recorded and made available to the Administrator;

(v) The manner in which information on the fuel used in the test program (including RVP level(s), name, address, telephone number, and contact person of supplier, quantity, date received from the supplier) will be recorded and made available to the Administrator;

(vi) The manner in which the distribution pumps will be labeled to insure proper use of the test fuel;

(vii) The name, address, telephone number and title of the person(s) in the organization requesting a testing exemption from whom further information on the request may be obtained; and

(viii) The name, address, telephone number and title of the person(s) in the organization requesting a testing exemption who will be responsible for recording and making available to the Administrator the information specified in paragraphs (e)(6)(iii), (iv), and (v) of this section, and the location in which such information will be maintained.

(7) A testing exemption will be granted by the Administrator upon a demonstration that the requirements of paragraphs (e)(2), (3), (4), (5) and (6) of this section have been met. The testing exemption will be granted in the form of a memorandum of exemption signed by the applicant and the Administrator (or his delegate), which shall include such terms and conditions as the Administrator determines necessary to monitor the exemption and to carry out the purposes of this section. Any violation of such a term or condition shall cause the exemption to be void.

[54 FR 11883, Mar. 22, 1989]

EDITORIAL NOTE: For FEDERAL REGISTER citations affecting § 80.27, see the List of CFR Sections Affected, which appears in the Finding Aids section of the printed volume and on GPO Access.

§ 80.28 Liability for violations of gasoline volatility controls and prohibitions.

(a) *Violations at refineries or importer facilities.* Where a violation of the applicable standard set forth in § 80.27 is detected at a refinery that is not an ethanol blending plant or at an importer's facility, the refiner or importer shall be deemed in violation.

(b) *Violations at carrier facilities.* Where a violation of the applicable standard set forth in § 80.27 is detected at a carrier's facility, whether in a transport vehicle, in a storage facility, or elsewhere at the facility, the following parties shall be deemed in violation:

(1) The carrier, except as provided in paragraph (g)(1) of this section;

(2) The refiner (if he is not an ethanol blender) at whose refinery the gasoline was produced or the importer at whose import facility the gasoline was imported, except as provided in paragraph (g)(2) of this section;

(3) The ethanol blender (if any) at whose ethanol blending plant the gasoline was produced, except as provided in paragraph (g)(6) of this section; and

(4) The distributor and/or reseller, except as provided in paragraph (g)(3) of this section.

(c) *Violations at branded distributor facilities, reseller facilities, or ethanol blending plants.* Where a violation of the applicable standard set forth in § 80.27 is detected at a distributor facility, a reseller facility, or an ethanol blending plant which is operating under the corporate, trade, or brand name of a gasoline refiner or any of its marketing subsidiaries, the following parties shall be deemed in violation:

(1) The distributor or reseller, except as provided in paragraph (g)(3) or (g)(8) of this section;

(2) The carrier (if any), if the carrier caused the gasoline to violate the applicable standard;

(3) The refiner under whose corporate, trade, or brand name (or that of any of its marketing subsidiaries) the distributor, reseller, or ethanol blender is operating, except as provided in paragraph (g)(4) of this section; and

(4) The ethanol blender (if any) at whose ethanol blending plant the gasoline was produced, except as provided in paragraph (g)(6) or (g)(8) of this section.

(d) *Violations at unbranded distributor facilities or ethanol blending plants.* Where a violation of the applicable standard set forth in § 80.27 is detected at a distributor facility or an ethanol blending plant not operating under a refiner's corporate, trade, or brand name, or that of any of its marketing subsidiaries, the following parties shall be deemcd in violation:

(1) The distributor, except as provided in paragraph (g)(3) or (g)(8) of this section;

(2) The carrier (if any), if the carrier caused the gasoline to violate the applicable standard;

(3) The refiner (if he is not an ethanol blender) at whose refinery the gasoline was produced or the importer at whose import facility the gasoline was imported, except as provided in paragraph (g)(2) of this section; and

(4) The ethanol blender (if any) at whose ethanol blending plant the gasoline was produced, except as provided in paragraph (g)(6) or (g)(8) of this section.

(e) *Violations at branded retail outlets or wholesale purchaser-consumer facilities.* Where a violation of the applicable standard set forth in § 80.27 is detected at a retail outlet or at a wholesale purchaser-consumer facility displaying the corporate, trade, or brand name of a gasoline refiner or any of its marketing subsidiaries, the following parties shall be deemed in violation:

(1) The retailer or wholesale purchaser-consumer, except as provided in paragraph (g)(5) or (g)(8) of this section;

(2) The distributor and/or reseller (if any), except as provided in paragraph (g)(3) or (g)(8) of this section;

(3) The carrier (if any), if the carrier caused the gasoline to violate the applicable standard;

(4) The refiner whose corporate, trade, or brand name (or that of any of its marketing subsidiaries) is displayed at the retail outlet or wholesale purchaser-consumer facility, except as provided in paragraph (g)(4) of this section; and

(5) The ethanol blender (if any) at whose ethanol blending plant the gasoline was produced, except as provided

in paragraph (g)(6) or (g)(8) of this section.

(f) *Violations at unbranded retail outlets or wholesale purchaser-consumer facilities.* Where a violation of the applicable standard set forth in § 80.27 is detected at a retail outlet or at a wholesale purchaser-consumer facility not displaying the corporate, trade, or brand name of a refiner or any of its marketing subsidiaries, the following parties shall be deemed in violation:

(1) The retailer or wholesale purchaser-consumer, except as provided in paragraph (g)(5) or (g)(8) of this section;

(2) The distributor (if any), except as provided in paragraph (g)(3) or (g)(8) of this section;

(3) The carrier (if any), if the carrier caused the gasoline to violate the applicable standard;

(4) The ethanol blender (if any) at whose ethanol blending plant the gasoline was produced, except as provided in paragraph (g)(6) of this section; and

(5) The refiner (if he is not an ethanol blender) at whose refinery the gasoline was produced and/or the importer at whose import facility the gasoline was imported, except as provided in paragraph (g)(2) of this section.

(g) *Defenses.* (1) In any case in which a carrier would be in violation under paragraph (b)(1) of this section, the carrier shall not be deemed in violation if he can demonstrate:

(i) That the violation was not caused by him or his employee or agent; and

(ii) Evidence of an oversight program conducted by the carrier, such as periodic sampling and testing of incoming gasoline, for monitoring the volatility of gasoline stored or transported by that carrier.

(iii) An oversight program under paragraph (g)(1)(ii) of this section need not include periodic sampling and testing of gasoline in a tank truck operated by a common carrier, but in lieu of such tank truck sampling and testing, the common carrier shall demonstrate evidence of an oversight program for monitoring compliance with the volatility requirements of § 80.27 relating to the transport or storage of gasoline by tank truck, such as appropriate guidance to drivers on compliance with applicable requirements and the periodic review of records normally received in the ordinary course of business concerning gasoline quality and delivery.

(2) In any case in which a refiner or importer would be in violation under paragraphs (b)(2), (d)(3), or (f)(5) of this section, the refiner or importer shall not be deemed in violation if he can demonstrate:

(i) That the violation was not caused by him or his employee or agent; and

(ii) Test results using the sampling methodology set forth in § 80.8 and the testing methodology set forth in § 80.46(c), or any other test method where adequate correlation to § 80.46(c) is demonstrated, which show evidence that the gasoline determined to be in violation was in compliance with the applicable standard when it was delivered to the next party in the distribution system.

(3) In any case in which a distributor or reseller would be in violation under paragraph (b)(4), (c)(1), (d)(1), (e)(2), or (f)(2) of this section, the distributor or reseller shall not be deemed in violation if he can demonstrate:

(i) That the violation was not caused by him or his employee or agent; and

(ii) Evidence of an oversight program conducted by the distributor or reseller, such as periodic sampling and testing of gasoline, for monitoring the volatility of gasoline that the distributor or reseller sells, supplies, offers for sale or supply, or transports.

(4) In any case in which a refiner would be in violation under paragraphs (c)(3) or (e)(4) of this section, the refiner shall not be deemed in violation if he can demonstrate all of the following:

(i) Test results using the sampling methodology set forth in § 80.8 and the testing methodology set forth in § 80.46(c), or any other test method where adequate correlation to § 80.46(c) is demonstrated, which show evidence that the gasoline determined to be in violation was in compliance with the applicable standard when transported from the refinery.

(ii) That the violation was not caused by him or his employee or agent; and

(iii) That the violation:

(A) Was caused by an act in violation of law (other than the Act or this part),

or an act of sabotage or vandalism, whether or not such acts are violations of law in the jurisdiction where the violation of the requirements of this part occurred, or

(B) Was caused by the action of a reseller, an ethanol blender, or a retailer supplied by such reseller or ethanol blender, in violation of a contractual undertaking imposed by the refiner on such reseller or ethanol blender designed to prevent such action, and despite reasonable efforts by the refiner (such as periodic sampling and testing) to insure compliance with such contractual obligation, or

(C) Was caused by the action of a retailer who is supplied directly by the refiner (and not by a reseller), in violation of a contractual undertaking imposed by the refiner on such retailer designed to prevent such action, and despite reasonable efforts by the refiner (such as periodic sampling and testing) to insure compliance with such contractual obligation, or

(D) Was caused by the action of a distributor or an ethanol blender subject to a contract with the refiner for transportation of gasoline from a terminal to a distributor, ethanol blender, retailer or wholesale purchaser-consumer, in violation of a contractual undertaking imposed by the refiner on such distributor or ethanol blender designed to prevent such action, and despite reasonable efforts by the refiner (such as periodic sampling and testing) to insure compliance with such contractual obligation, or

(E) Was caused by a carrier or other distributor not subject to a contract with the refiner but engaged by him for transportation of gasoline from a terminal to a distributor, ethanol blender, retailer or wholesale purchaser-consumer, despite reasonable efforts by the refiner (such as specification or inspection of equipment) to prevent such action, or

(F) Occurred at a wholesale purchaser-consumer facility: *Provided, however*, That if such wholesale purchaser-consumer was supplied by a reseller or ethanol blender, the refiner must demonstrate that the violation could not have been prevented by such reseller's or ethanol blender's compliance with a contractual undertaking imposed by the refiner on such reseller or ethanol blender as provided in paragraph (g)(4)(iii)(B) of this section.

(iv) In paragraphs (g)(4)(iii)(A) through (E) of this section, the term ''was caused'' means that the refiner must demonstrate by reasonably specific showings, by direct or circumstantial evidence, that the violation was caused or must have been caused by another.

(5) In any case in which a retailer or wholesale purchaser-consumer would be in violation under paragraphs (e)(1) or (f)(1) of this section, the retailer or wholesale purchaser-consumer shall not be deemed in violation if he can demonstrate that the violation was not caused by him or his employee or agent.

(6) In any case in which an ethanol blender would be in violation under paragraphs (b)(3), (c)(4), (d)(4), (e)(5) or (f)(4) of this section, the ethanol blender shall not be deemed in violation if he can demonstrate:

(i) That the violation was not caused by him or his employee or agent; and

(ii) Evidence of an oversight program conducted by the ethanol blender, such as periodic sampling and testing of gasoline, for monitoring the volatility of gasoline that the ethanol blender sells, supplies, offers for sale or supply or transports; and

(iii) That the gasoline determined to be in violation contained no more than 10% ethanol (by volume) when it was delivered to the next party in the distribution system.

(7) In paragraphs (g)(1)(i), (g)(2)(i), (g)(3)(i), (g)(4)(ii), (g)(5), and (g)(6)(i) of this section, the respective party must demonstrate by reasonably specific showings, by direct or circumstantial evidence, that it or its employee or agent did not cause the violation.

(8) In addition to the defenses provided in paragraphs (g)(1) through (g)(6) of this section, in any case in which an ethanol blender, distributor, reseller, carrier, retailer, or wholesale purchaser-consumer would be in violation under paragraphs (b), (c), (d), (e) or (f), of this section, as a result of gasoline which contains between 9 and 10 percent ethanol (by volume) but exceeds the applicable standard by more than one pound per square inch (1.0 psi), the

ethanol blender, distributor, reseller, carrier, retailer or wholesale purchaser-consumer shall not be deemed in violation if such person can demonstrate, by showing receipt of a certification from the facility from which the gasoline was received or other evidence acceptable to the Administrator, that:

(i) The gasoline portion of the blend complies with the Reid vapor pressure limitations of § 80.27(a); and

(ii) The ethanol portion of the blend does not exceed 10 percent (by volume); and

(iii) No additional alcohol or other additive has been added to increase the Reid vapor pressure of the ethanol portion of the blend.

In the case of a violation alleged against an ethanol blender, distributor, reseller, or carrier, if the demonstration required by paragraphs (g)(8)(i), (ii), and (iii) of this section is made by a certification, it must be supported by evidence that the criteria in paragraphs (g)(8)(i), (ii), and (iii) of this section have been met, such as an oversight program conducted by or on behalf of the ethanol blender, distributor, reseller or carrier alleged to be in violation, which includes periodic sampling and testing of the gasoline or monitoring the volatility and ethanol content of the gasoline. Such certification shall be deemed sufficient evidence of compliance provided it is not contradicted by specific evidence, such as testing results, and provided that the party has no other reasonable basis to believe that the facts stated in the certification are inaccurate. In the case of a violation alleged against a retail outlet or wholesale purchaser-consumer facility, such certification shall be deemed an adequate defense for the retailer or wholesale purchaser-consumer, provided that the retailer or wholesale purchaser-consumer is able to show certificates for all of the gasoline contained in the storage tank found in violation, and, provided that the retailer or wholesale purchaser-consumer has no reasonable basis to believe that the facts stated in the certifications are inaccurate.

[54 FR 11885, Mar. 22, 1989; 54 FR 27017, June 27, 1989, as amended at 56 FR 64711, Dec. 12, 1991; 58 FR 14484, Mar. 17, 1993; 62 FR 68205, Dec. 31, 1997; 67 FR 8736, Feb. 26, 2002]

§ 80.29 Controls and prohibitions on diesel fuel quality.

(a) *Prohibited activities.* Beginning October 1, 1993 and continuing until the implementation dates for subpart I of part 80 as specified in § 80.500, except as provided in 40 CFR 69.51, no person, including but not limited to, refiners, importers, distributors, resellers, carriers, retailers or wholesale purchaser-consumers, shall manufacture, introduce into commerce, sell, offer for sale, supply, store, dispense, offer for supply or transport any diesel fuel for use in motor vehicles, unless the diesel fuel:

(1) Has a sulfur percentage, by weight, no greater than 0.05 percent;

(2)(i) Has a cetane index of at least 40; or

(ii) Has a maximum aromatic content of 35 volume percent; and

(3) Is free of visible evidence of the dye solvent red 164; unless it is used in a manner that is tax-exempt as defined under section 4082 of the Internal Revenue Code (26 U.S.C. 4082).

(b) *Determination of compliance.* (1) Any diesel fuel which does not show visible evidence of being dyed with dye solvent red 164 (which has a characteristic red color in diesel fuel) shall be considered to be available for use in diesel motor vehicles and motor vehicle engines, and shall be subject to the prohibitions of paragraph (a) of this section.

(2) Compliance with the sulfur, cetane, and aromatics standards in paragraph (a) of this section shall be determined based on the level of the applicable component or parameter, using the sampling methodologies specified in § 80.330(b), as applicable, and the appropriate testing methodologies specified in § 80.580(a) for sulfur, § 80.2(w) for cetane index, and § 80.2(z) for aromatic content. Any evidence or information, including the exclusive use of such evidence or information, may be used to establish the level of the applicable component or parameter in the diesel fuel, if the evidence or information is

relevant to whether that level would have been in compliance with the standard if the appropriate sampling and testing methodology had been correctly performed. Such evidence may be obtained from any source or location and may include, but is not limited to, test results using methods other than the compliance methods in this paragraph (b), business records, and commercial documents.

(3) Determination of compliance with the requirements of this section other than the standards described in paragraph (a) of this section, and determination of liability for any violation of this section, may be based on information obtained from any source or location. Such information may include, but is not limited to, business records and commercial documents.

(c) *Transfer documents.* (1) Any person that transfers custody or title of diesel fuel for use in motor vehicles which contains visible evidence of the dye solvent red 164 shall provide documents to the transferee which state that such fuel meets the applicable standards for sulfur and cetane index or aromatic content under these regulations and is only for tax-exempt use in diesel motor vehicles as defined under section 4082 of the Internal Revenue Code.

(2) Any person that is the transferor or the transferee of diesel fuel for use in motor vehicles which contains visible evidence of the dye solvent red 164, shall retain the documents required under paragraph (c)(1) of this section for a period of five years from the date of transfer of such fuel and shall provide such documents to the Administrator or the Administrator's representative upon request.

(d) *Liability.* Liability for violations of paragraph (a)(1) of this section shall be determined according to the provisions of § 80.30. Any person that violates paragraph (a)(2) or (c) of this section shall be liable for penalties in accordance with paragraph (e) of this section.

(e) *Penalties.* Penalties for violations of paragraph (a) or (c) of this section shall be determined according to the provisions of § 80.5.

[59 FR 35858, July 14, 1994, as amended at 63 FR 49465, Sept. 16, 1998; 66 FR 5135, Jan. 18, 2001]

§ 80.30 Liability for violations of diesel fuel control and prohibitions.

(a) *Violations at refiners or importers facilities.* Where a violation of a diesel fuel standard set forth in § 80.29 is detected at a refinery or importer's facility, the refiner or importer shall be deemed in violation.

(b) *Violations at carrier facilities.* Where a violation of a diesel fuel standard set forth in § 80.29 is detected at a carrier's facility, whether in a transport vehicle, in a storage facility, or elsewhere at the facility, the following parties shall be deemed in violation:

(1) The carrier, except as provided in paragraph (g)(1) of this section; and

(2) The refiner or importer at whose refinery or import facility the diesel fuel was produced or imported, except as provided in paragraph (g)(2) of this section.

(c) *Violations at branded distributor or reseller facilities.* Where a violation of a diesel fuel standard set forth in § 80.29 is detected at a distributor or reseller's facility which is operating under the corporate, trade or brand name of a refiner or any of its marketing subsidiaries, the following parties shall be deemed in violation:

(1) The distributor or reseller, except as provided in paragraph (g)(3) of this section;

(2) The carrier (if any), if the carrier caused the diesel fuel to violate the standard by fuel switching, blending, mislabeling, or any other means; and

(3) The refiner under whose corporate, trade, or brand name (or that of any of its marketing subsidiaries) the distributor or reseller is operating, except as provided in paragraph (g)(4) of this section.

(d) *Violations at unbranded distributor facilities.* Where a violation of a diesel fuel standard set forth in § 80.29 is detected at the facility of a distributor not operating under a refiner's corporate, trade, or brand name, or that of any of its marketing subsidiaries, the following shall be deemed in violation:

(1) The distributor, except as provided in paragraph (g)(3) of this section;

(2) The carrier (if any), if the carrier caused the diesel fuel to violate the

standard by fuel switching, blending, mislabeling, or any other means; and

(3) The refiner or importer at whose refinery or import facility the diesel fuel was produced or imported, except as provided in paragraph (g)(2) of this section.

(e) *Violations at branded retail outlets or wholesale purchaser-consumer facilities.* Where a violation of a diesel fuel standard set forth in § 80.29 is detected at a retail outlet or at a wholesale purchaser-consumer facility displaying the corporate, trade, or brand name of a refiner or any of its marketing subsidiaries, the following parties shall be deemed in violation:

(1) The retailer or wholesale purchaser-consumer, except as provided in paragraph (g)(5) of this section;

(2) The distributor and/or reseller (if any), except as provided in paragraph (g)(3) of this section;

(3) The carrier (if any), if the carrier caused the diesel fuel to violate the standard by fuel switching, blending, mislabeling, or any other means; and

(4) The refiner whose corporate, trade, or brand name, or that of any of its marketing subsidiaries, is displayed at the retail outlet or wholesale purchaser-consumer facility, except as provided in paragraph (g)(4) of this section.

(f) *Violations at unbranded retail outlets or wholesale purchaser-consumer facilities.* Where a violation of a diesel fuel standard set forth in § 80.29 is detected at a retail outlet or at a wholesale purchaser-consumer facility not displaying the corporate, trade, or brand name of a refiner or any of its marketing subsidiaries, the following parties shall be deemed in violation:

(1) The retailer or wholesale purchaser-consumer, except as provided in paragraph (g)(5) of this section;

(2) The distributor (if any), except as provided in paragraph (g)(3) of this section;

(3) The carrier (if any), if the carrier caused the diesel fuel to violate the standard by fuel switching, blending, mislabeling, or any other means; and

(4) The refiner or importer at whose refinery or import facility the diesel fuel was produced or imported, except as provided in paragraph (g)(2) of this section.

(g) *Defenses.* (1) In any case in which a carrier would be in violation under paragraph (b)(1) of this section, the carrier shall not be deemed in violation if he can demonstrate:

(i) Evidence of an oversight program conducted by the carrier, for monitoring the diesel fuel stored or transported by that carrier, such as periodic sampling and testing of the cetane index and sulfur percentage of incoming diesel fuel. Such an oversight program need not include periodic sampling and testing of diesel fuel in a tank truck operated by a common carrier, but in lieu of such tank truck sampling and testing the common carrier shall demonstrate evidence of an oversight program for monitoring compliance with the diesel fuel requirements of § 80.29 relating to the transport or storage of diesel fuel by tank truck, such as appropriate guidance to drivers on compliance with applicable requirements and the periodic review of records normally received in the ordinary course of business concerning diesel fuel quality and delivery; and

(ii) That the violation was not caused by the carrier or his employee or agent.

(2) In any case in which a refiner or importer would be in violation under paragraphs (b)(2), (d)(3), or (f)(4) of this section, the refiner or importer shall not be deemed in violation if he can demonstrate:

(i) That the violation was not caused by him or his employee or agent; and

(ii) Test results, performed in accordance with the applicable sampling and testing methodologies set forth in §§ 80.2(w), 80.2(z), 80.2(bb), and 80.580, which evidence that the diesel fuel determined to be in violation was in compliance with the diesel fuel standards of § 80.29(a) when it was delivered to the next party in the distribution system;

(3) In any case in which a distributor or reseller would be in violation under paragraphs (c)(1), (d)(1), (e)(2) or (f)(2) of this section, the distributor or reseller shall not be deemed in violation if he can demonstrate:

(i) That the violation was not caused by him or his employee or agent; and

(ii) Evidence of an oversight program conducted by the distributor or reseller, such as periodic sampling and

testing of diesel fuel, for monitoring the sulfur percentage and cetane index of the diesel fuel that the distributor or reseller sells, supplies, offers for sale or supply, or transports.

(4) In any case in which a refiner would be in violation under paragraphs (c)(3) or (e)(4) of this section, the refiner shall not be deemed in violation if he can demonstrate all of the following:

(i) Test results, performed in accordance with the applicable sampling and testing methodologies set forth in §§ 80.2(w), 80.2(z), 80.2(bb), and 80.580, which evidence that the diesel fuel determined to be in violation was in compliance with the diesel fuel standards of § 80.29(a) when it was delivered to the next party in the distribution system;

(ii) That the violation was not caused by him or his employee or agent; and

(iii) That the violation:

(A) Was caused by an act in violation of law (other than the Act or this part), or an act of sabotage or vandalism, whether or not such acts are violations of law in the jurisdiction where the violation of the requirements of this part occurred, or

(B) Was caused by the action of a reseller or a retailer supplied by such reseller, in violation of a contractual undertaking imposed by the refiner on such reseller designed to prevent such action, and despite reasonable efforts by the refiner (such as periodic sampling and testing) to insure compliance with such contractual obligation, or

(C) Was caused by the action of a retailer who is supplied directly by the refiner (and not by a reseller), in violation of a contractual undertaking imposed by the refiner on such retailer designed to prevent such action, and despite reasonable efforts by the refiner (such as periodic sampling and testing) to insure compliance with such contractual obligation, or

(D) Was caused by the action of a distributor subject to a contract with the refiner for transportation of diesel fuel from a terminal to a distributor, retailer or wholesale purchaser-consumer, in violation of a contractual undertaking imposed by the refiner on such distributor designed to prevent such action, and despite reasonable efforts by the refiner (such as periodic sampling and testing) to ensure compliance with such contractual obligation, or

(E) Was caused by a carrier or other distributor not subject to a contract with the refiner but engaged by him for transportation of diesel fuel from a terminal to a distributor, retailer or wholesale purchaser-consumer, despite reasonable efforts by the refiner (such as specification or inspection of equipment) to prevent such action, or

(F) Occurred at a wholesale purchaser-consumer facility: *Provided, however*, That if such wholesale purchaser-consumer was supplied by a reseller, the refiner must demonstrate that the violation could not have been prevented by such reseller's compliance with a contractual undertaking imposed by the refiner on such reseller as provided in paragraph (g)(4)(iii)(B) of this section.

(iv) In paragraphs (g)(4)(iii) (A) through (E) of this section, the term *was caused* means that the refiner must demonstrate by reasonably specific showings, by direct or circumstantial evidence, that the violation was caused or must have been caused by another.

(5) In any case in which a retailer or wholesale purchaser-consumer would be in violation under paragraphs (e)(1) or (f)(1) of this section, the retailer or wholesale purchaser-consumer shall not be deemed in violation if he can demonstrate that the violation was not caused by him or his employee or agent.

(6) In paragraphs (g)(1)(iii), (g)(2)(i), (g)(3)(i), (g)(4)(ii) and (g)(5) of this section, the respective party must demonstrate by reasonably specific showings, by direct or circumstantial evidence, that it or its employee or agent did not cause the violation.

(7) In the case of any distributor or reseller that would be in violation under paragraph (e)(2) or (f)(2) of this section or any wholesale purchaser-consumer or retailer that would be in violation under paragraph (e)(1) or (f)(1) of this section for diesel fuel for use in motor vehicles which contains visible evidence of the dye solvent red 164, the distributor or reseller or wholesale purchaser-consumer or retailer shall not be deemed in violation if he can:

(i) Demonstrate that the violation was not caused by him or his employee or agent,

(ii) Demonstrate that the fuel has been supplied, offered for supply, transported or available for tax-exempt use as defined under section 4082 of the Internal Revenue Code, and

(iii) Provide evidence from the supplier in the form of documentation that the fuel met the applicable standards under paragraph (a)(1) of this section for sulfur and cetane index or aromatics content for use in motor vehicles.

(h) *Detection of violations.* In paragraphs (a) through (f) of this section, the term ''is detected at'' means that the violation existed at the facility in question, and the existence of the violation at that facility may be established through evidence obtained or created at that facility, at any other location, and by any party.

[55 FR 34138, Aug. 21, 1990, as amended at 59 FR 35859, July 14, 1994; 62 FR 68205, Dec. 31, 1997; 66 FR 5135, Jan. 18, 2001]

§ 80.32 Controls applicable to liquefied petroleum gas retailers and wholesale purchaser-consumers.

After January 1, 1998 every retailer and wholesale purchaser- consumer handling over 13,660 gallons of liquefied petroleum gas per month shall equip each pump from which liquefied petroleum gas is introduced into motor vehicles with a nozzle that has no greater than 2.0 cm^3 dead space from which liquefied petroleum gas will be released upon nozzle disconnect from the vehicle, as measured from the nozzle face which seals against the vehicle receptacle ''O'' ring, and as determined by calculation of the geometric shape of the nozzle. After January 1, 2000 this requirement applies to every liquefied petroleum gas retailer and wholesale purchaser- consumer. Any dispensing pump shown to be dedicated to heavy-duty vehicles is exempt from this requirement.

[59 FR 48490, Sept. 21, 1994]

§ 80.33 Controls applicable to natural gas retailers and wholesale purchaser-consumers.

(a) After January 1, 1998 every retailer and wholesale purchaser-consumer handling over 1,215,000 standard cubic feet of natural gas per month shall equip each pump from which natural gas is introduced into natural gas motor vehicles with a nozzle and hose configuration which vents no more than 1.2 grams of natural gas to the atmosphere per refueling of a vehicle complying with § 86.098–8(d)(1)(iv) of this chapter, as determined by calculation of the geometric shape of the nozzle and hose. After January 1, 2000 this requirement applies to every natural gas retailer and wholesale purchaser-consumer. Any dispensing pump shown to be dedicated to heavy-duty vehicles is exempt from this requirement.

(b) The provisions of paragraph (a) of this section can be waived for refueling stations which were in operation on or before January 1, 1998 provided the station operator can demonstrate, to the satisfaction of the Administrator, that compliance with paragraph (a) of this section would require additional compression equipment or other modifications with costs similar to or greater than the cost of additional compression equipment.

[59 FR 48490, Sept. 21, 1994]

Subpart C—Oxygenated Gasoline

§ 80.35 Labeling of retail gasoline pumps; oxygenated gasoline.

(a) For oxygenated gasoline programs with a minimum oxygen content per gallon or minimum oxygen content requirement in conjunction with a credit program, the following shall apply:

(1) Each gasoline pump stand from which oxygenated gasoline is dispensed at a retail outlet in the control area shall be affixed during the control period with a legible and conspicuous label which contains the following statement:

The gasoline dispensed from this pump is oxygenated and will reduce carbon monoxide pollution from motor vehicles.

(2) The posting of the above statement shall be in block letters of no less than 20-point bold type; in a color contrasting with the intended background. The label shall be placed on the vertical surface of the pump on each side with gallonage and price meters and shall be on the upper two-thirds of

the pump, clearly readable to the public.

(3) The retailer shall be responsible for compliance with the labeling requirements of this section.

(b) For oxygenated gasoline programs with a credit program and no minimum oxygen content requirement, the following shall apply:

(1) Each gasoline pump stand from which oxygenated gasoline is dispensed at a retail outlet in the control area shall be affixed during the control period with a legible and conspicuous label which contains the following statement:

The fuel dispensed from this pump meets the requirements of the Clean Air Act as part of a program to reduce carbon monoxide pollution from motor vehicles.

(2) The posting of the above statement shall be in block letters of no less than 20-point bold type; in a color contrasting with the intended background. The label shall be placed on the vertical surface of the pump on each side with gallonage and price meters and shall be on the upper two-thirds of the pump, clearly readable to the public.

(3) The retailer shall be responsible for compliance with the labeling requirements of this section.

[57 FR 47771, Oct. 20, 1992]

§§ 80.36–80.39 [Reserved]

Subpart D—Reformulated Gasoline

SOURCE: 59 FR 7813, Feb. 16, 1994, unless otherwise noted.

§ 80.40 Fuel certification procedures.

(a) Gasoline that complies with one of the standards specified in § 80.41 (a) through (f) that is relevant for the gasoline, and that meets all other relevant requirements prescribed under § 80.41, shall be deemed certified.

(b) Any refiner or importer may, with regard to a specific fuel formulation, request from the Administrator a certification that the formulation meets one of the standards specified in § 80.41 (a) through (f).

(c)(1) ''Adjusted VOC gasoline'' for purposes of the general requirements in § 80.65(d)(2)(ii), and the certification procedures in this section is gasoline that contains 10 volume percent ethanol, or RBOB intended for blending with 10 volume percent ethanol, that is intended for use in the areas described at § 80.70(f) and (i), and is designated by the refiner as adjusted VOC gasoline subject to less stringent VOC standards in § 80.41(e) and (f). In order for ''adjusted VOC gasoline'' to qualify for the regulatory treatment specified in § 80.41(e) and (f), reformulated gasoline must contain denatured, anhydrous ethanol. The concentration of the ethanol, excluding the required denaturing agent, must be at least 9% and no more than 10% (by volume) of the gasoline. The ethanol content of the gasoline shall be determined by use of one of the testing methodologies specified in § 80.46(g).

(2) Refiners may choose not to designate as adjusted VOC gasoline or RBOB that otherwise meets the requirements of paragraph (c)(1) of this section, in which case the more stringent VOC standards in § 80.41 apply.

(3) For purposes of § 80.78(a)(1)(v), the ''Adjusted VOC gasoline'' standards under § 80.41 are the applicable VOC emissions performance standards only for adjusted VOC gasoline that is intended for use in or sold for use by an ultimate consumer in the covered areas described at § 80.70(f) and (i). For purposes of § 80.78(a)(1)(v), gasoline designated as adjusted VOC gasoline that is intended for use or that is sold for use by an ultimate consumer in any covered area in VOC-Control Region 2 other than those described at § 80.70(f) and (i), is subject to the VOC performance standards in § 80.41 applicable to all other gasoline designated for VOC-Control Region 2.

[59 FR 7813, Feb. 16, 1994, as amended at 66 FR 37164, July 17, 2001; 67 FR 8736, Feb. 26, 2002]

§ 80.41 Standards and requirements for compliance.

(a) *Simple model per-gallon standards.* The ''simple model'' standards for compliance when achieved on a per-gallon basis are as follows:

SIMPLE MODEL PER-GALLON STANDARDS

Reid vapor pressure (in pounds per square inch):	
Gasoline designated for VOC-Control Region 1	≤7.2
Gasoline designated for VOC-Control Region 2	≤8.1
Oxygen content (percent, by weight)	≥2.0
Toxic air pollutants emissions reduction (percent)	≥15.0
Benzene (percent, by volume)	≤1.00

(b) *Simple model averaged standards.* The ''simple model'' standards when achieved on average are as follows:

SIMPLE MODEL AVERAGED STANDARDS

Reid vapor pressure (in pounds per square inch):	
Gasoline designated for VOC-Control Region 1:	
Standard	≤7.1
Per-Gallon Maximum	≤7.4
Gasoline designated for VOC-Control Region 2:	
Standard	≤8.0
Per-Gallon Maximum	≤8.3
Oxygen content (percent, by weight):	
Standard	≥2.1
Per-Gallon Minimum	≥1.5
Toxic air pollutants emissions reduction (percent)	≥16.5
Benzene (percent, by volume):	
Standard	≤0.95
Per-Gallon Maximum	≤1.30

(c) *Phase I complex model per gallon standards.* The Phase I ''complex model'' standards for compliance when achieved on a per-gallon basis are as follows:

PHASE I—COMPLEX MODEL PER-GALLON STANDARDS

VOC emissions performance reduction (percent):	
Gasoline designated for VOC-Control Region 1	≥35.1
Gasoline designated for VOC-Control Region 2	≥15.6
Toxic air pollutants emissions performance reduction (percent)	≥15.0
NO_X emissions performance reduction (percent)	≥0.0
Oxygen content (percent, by weight)	≥2.0
Benzene (percent, by volume)	≤1.00

(d) *Phase I complex model averaged standards.* The Phase I ''complex model'' standards for compliance when achieved on average are as follows:

PHASE I COMPLEX MODEL AVERAGED STANDARDS

VOC emissions performance reduction (percent)	
Gasoline designated for VOC-Control Region 1:	
Standard	≥36.6
Per-Gallon Minimum	≥32.6
Gasoline designated for VOC-Control Region 2:	
Standard	≥17.1
Per-Gallon Minimum	≥13.1
Toxics air pollutants emissions performance reduction (percent)	≥16.5
NO_X emissions performance reduction (percent)	≥1.5
Oxygen content (percent, by weight):	

PHASE I COMPLEX MODEL AVERAGED STANDARDS—Continued

Standard	≥2.1
Per-Gallon Minimum	≥1.5
Benzene (percent, by volume):	
Standard	≤0.95
Per-Gallon Maximum	≤1.30

(e)(1) *Phase II complex model per-gallon standards.* The Phase II ''complex model'' standards for compliance when achieved on a per-gallon basis are as follows:

PHASE II—COMPLEX MODEL PER-GALLON STANDARDS

VOC emissions performance reduction (percent):	
Gasoline designated for VOC-Control Region 1	≥27.5
Adjusted VOC gasoline designated for VOC-Control Region 2	≥23.9
All other gasoline designated for VOC-Control Region 2	≥25.9
Toxic air pollutants emissions performance reduction (percent)	≥20.0
NO_X emissions performance reduction (percent):	
Gasoline designated as VOC-controlled	≥5.5
Gasoline not designated as VOC-controlled	≥0.0
Benzene (percent, by volume)	≤1.00

(2)(i) The NO_X emissions performance reduction specified in paragraph (e)(1) of this section shall no longer apply beginning January 1, 2007, except as provided in paragraph (e)(2)(ii) of this section.

(ii) For a refiner subject to the small refiner gasoline sulfur standards at § 80.240, the NO_X emissions performance reduction specified in paragraph (e)(1) of this section shall no longer apply beginning January 1, 2008. For a refiner subject to the gasoline sulfur standards at § 80.240 that has received an extension of its small refiner gasoline sulfur standards under § 80.553, the NO_X emissions performance reduction specified in paragraph (e)(1) of this section shall no longer apply beginning January 1, 2011.

(3)(i) Beginning January 1, 2011, or January 1, 2015 for small refiners approved under § 80.1340, the toxic air pollutants emissions performance reduction and benzene content specified in paragraph (e)(1) of this section shall apply to reformulated gasoline that is not subject to the benzene standard of § 80.1230, pursuant to the provisions of § 80.1235.

(ii) The toxic air pollutants emissions performance reduction and benzene content specified in paragraph (e)(1) of this section shall not apply to reformulated gasoline produced by a

refinery approved under § 80.1334, pursuant to § 80.1334(c).

(f)(1) *Phase II complex model averaged standards.* The Phase II ''complex model'' standards for compliance when achieved on average are as follows:

PHASE II COMPLEX MODEL AVERAGED STANDARDS

VOC emissions performance reduction (percent):	
Gasoline designated for VOC-Control Region 1	
Standard	≥29.0
Per-Gallon Minimum	≥25.0
Adjusted VOC gasoline designated for VOC-Control Region 2	
Standard	≥25.4
Per-Gallon Minimum	≥21.4
All other gasoline designated for VOC-Control Region 2	
Standard	≥27.4
Per-Gallon Minimum	≥23.4
Toxic air pollutants emissions performance reduction (percent)	≥21.5
NO_X emissions performance reduction (percent):	
Gasoline designated as VOC-controlled	≥6.8
Gasoline not designated as VOC-controlled	≥1.5
Benzene (percent, by volume):	
Standard	≤0.95
Per-Gallon Maximum	≤1.30

(2)(i) The NO_X emissions performance reduction specified in paragraph (f)(1) of this section shall no longer apply beginning January 1, 2007, except as provided in paragraph (f)(2)(ii) of this section.

(ii) For a refiner subject to the small refiner gasoline sulfur standards at § 80.240, the NO_X emissions performance reduction specified in paragraph (f)(1) of this section shall no longer apply beginning January 1, 2008. For a refiner subject to the gasoline sulfur standards at § 80.240 that has received an extension of its small refiner gasoline sulfur standards under § 80.553, the NO_X emissions performance reduction specified in paragraph (f)(1) of this section shall no longer apply beginning January 1, 2011.

(3)(i) Beginning January 1, 2011, or January 1, 2015 for small refiners approved under § 80.1340, the toxic air pollutants emissions performance reduction and benzene content specified in paragraph (f)(1) of this section shall apply only to reformulated gasoline that is not subject to the benzene standard of § 80.1230, pursuant to the provisions of § 80.1235.

(ii) The toxic air pollutants emissions performance reduction and benzene content specified in paragraph (f)(1) of this section shall not apply to reformulated gasoline produced by a refinery approved under § 80.1334, pursuant to § 80.1334(c).

(g) *Oxygen maximum standard.* (1) The per-gallon standard for maximum oxygen content, which applies to reformulated gasoline subject to the simple model per-gallon or average standards, is as follows:

(i) Oxygen content shall not exceed 3.2 percent by weight from ethanol within the boundaries of any State if the State notifies the Administrator that the use of an oxygenate will interfere with attainment or maintenance of an ambient air quality standard or will contribute to an air quality problem.

(ii) A State may request the standard specified in paragraph (g)(1)(i) of this section separately for reformulated gasoline designated as VOC-controlled and reformulated gasoline not designated as VOC-controlled.

(2) The standard in paragraph (g)(1)(i) of this section shall apply 60 days after the Administrator publishes a notice in the FEDERAL REGISTER announcing such a standard.

(h) *Additional standard requirements.* In addition to the standards specified in paragraphs (a) through (g) of this section, the following standards apply for all reformulated gasoline:

(1) The standard for heavy metals, including lead or manganese, on a per-gallon basis, is that reformulated gasoline may contain no heavy metals. The Administrator may waive this prohibition for a heavy metal (other than lead) if the Administrator determines that addition of the heavy metal to the gasoline will not increase, on an aggregate mass or cancer-risk basis, toxic air pollutant emissions from motor vehicles.

(2) In the case of any refinery or importer subject to the simple model standards:

(i) The annual average levels for sulfur, T–90, and olefins cannot exceed that refinery's or importer's 1990 baseline levels for each of these parameters; and

(ii) The 1990 baseline levels and the annual averages for these parameters shall be established using the methodology set forth in §§ 80.91 through 80.92; and

(iii) In the case of a refiner that operates more than one refinery, the standards specified under this paragraph (h)(2) shall be met using the refinery grouping selected by the refiner under § 80.101(h).

(i) *Use of simple and complex models.* (1) During each calendar year 1995 through 1997, any refinery or importer shall be subject to either the simple model standards specified in paragraphs (a) and (b) of this section, or the Phase I complex model standards specified in paragraphs (c) and (d) of this section, at the option of the refiner or importer, provided that:

(i) No refinery or importer may be subject to a combination of simple and complex standards during any calendar year; and

(ii) Any refiner or importer that elects to achieve compliance with the anti-dumping requirements using the:

(A) Simple model shall meet the requirements of this subpart D using the simple model standards; or

(B) Complex model or optional complex model shall meet the requirements of this subpart D using the complex model standards.

(2) During the period January 1, 1998 through December 31, 1999, any refiner or importer shall be subject to the Phase I complex model standards specified in paragraphs (c) and (d) of this section.

(3) Beginning on January 1, 2000, any refiner or importer shall be subject to the Phase II complex model standards specified in paragraphs (e) and (f) of this section.

(j) *Complex model early use.* Before January 1, 1998, the VOC, toxics, and NO_X emissions performance standards for any refinery or importer subject to the Phase I complex model standards shall be determined by evaluating all of the following parameter levels in the Phase I complex model (specified in § 80.45) at one time:

(1) The simple model values for benzene, RVP, and oxygen specified in § 80.41 (a) or (b), as applicable;

(2) The aromatics value which, together with the values for benzene, RVP, and oxygen determined under paragraph (j)(1) of this section, meets the Simple Model toxics requirement specified in paragraph (a) or (b) of this section, as applicable;

(3) The refinery's or importer's individual baseline values for sulfur, E–300, and olefins, as established under § 80.91; and

(4) The appropriate seasonal value of E–200 specified in § 80.45(b)(2).

(k) *Effect of VOC survey failure.* (1) On each occasion during 1995 or 1996 that a covered area fails a simple model VOC emissions reduction survey conducted pursuant to § 80.68, the RVP requirements for that covered area beginning in the year following the failure shall be adjusted to be more stringent as follows:

(i) The required average RVP level shall be decreased by an additional 0.1 psi; and

(ii) The maximum RVP level for each gallon of averaged gasoline shall be decreased by an additional 0.1 psi.

(2) On each occasion that a covered area fails a complex model VOC emissions reduction survey conducted pursuant to § 80.68, or fails a simple model VOC emissions reduction survey conducted pursuant to § 80.68 during 1997, the VOC emissions performance standard for that covered area beginning in the year following the failure shall be adjusted to be more stringent as follows:

(i) The required average VOC emissions reduction shall be increased by an additional 1.0%; and

(ii) The minimum VOC emissions reduction, for each gallon of averaged gasoline, shall be increased by an additional 1.0%.

(3) In the event that a covered area for which required VOC emissions reductions have been made more stringent passes all VOC emissions reduction surveys in two consecutive years, the averaging standards VOC emissions reduction for that covered area beginning in the year following the second year of passed survey series shall be made less stringent as follows:

(i) The required average VOC emissions reduction shall be decreased by 1.0%; and

(ii) The minimum VOC emissions reduction shall be decreased by 1.0%.

(4) In the event that a covered area for which the required VOC emissions

reductions have been made less stringent fails a subsequent VOC emissions reduction survey:

(i) The required average VOC emission reductions for that covered area beginning in the year following this subsequent failure shall be made more stringent by increasing the required average and the minimum VOC emissions reduction by 1.0%; and

(ii) The required VOC emission reductions for that covered area thereafter shall not be made less stringent regardless of the results of subsequent VOC emissions reduction surveys.

(l) *Effect of toxics survey failure.* (1) On each occasion during 1995 or 1996 that a covered area fails a simple model toxics emissions reduction survey series, conducted pursuant to § 80.68, the simple model toxics emissions reduction requirement for that covered area beginning in the year following the year of the failure is made more stringent by increasing the average toxics emissions reduction by an additional 1.0%.

(2) On each occasion that a covered area fails a complex model toxics emissions reduction survey series, conducted pursuant to § 80.68, or fails a simple model toxics emissions reduction survey series conducted pursuant to § 80.68 during 1997, the complex model toxics emissions reduction requirement for that covered area beginning in the year following the year of the failure is made more stringent by increasing the average toxics emissions reduction by an additional 1.0%.

(3) In the event that a covered area for which the toxics emissions standard has been made more stringent passes all toxics emissions survey series in two consecutive years, the averaging standard for toxics emissions reductions for that covered area beginning in the year following the second year of passed survey series shall be made less stringent by decreasing the average toxics emissions reduction by 1.0%.

(4) In the event that a covered area for which the toxics emissions reduction standard has been made less stringent fails a subsequent toxics emissions reduction survey series:

(i) The standard for toxics emissions reduction for that covered area beginning in the year following this subsequent failure shall be made more stringent by increasing the average toxics emissions reduction by 1.0%; and

(ii) The standard for toxics emissions reduction for that covered area thereafter shall not be made less stringent regardless of the results of subsequent toxics emissions reduction surveys.

(m) *Effect of NO_X survey or survey series failure.* (1) On each occasion that a covered area fails a NO_X emissions reduction survey or survey series conducted pursuant to § 80.68, the required average NO_X emissions reductions for that covered area beginning in the year following the failure shall be increased in stringency by an additional 1.0%.

(2) In the event that a covered area for which required NO_X emissions reductions have been made more stringent passes all NO_X emissions reduction surveys and survey series in two consecutive years, the required average NO_X emissions reductions for that covered area beginning in the year following the second year of passed surveys and survey series shall be decreased in stringency by 1.0%.

(3) In the event that a covered area for which the required NO_X emissions reductions have been made less stringent fails a subsequent NO_X emissions reduction survey or survey series:

(i) The required average NO_X emission reductions for that covered area beginning in the year following this subsequent failure shall be increased in stringency by 1.0%; and

(ii) The required NO_X emission reductions for that covered area thereafter shall not be made less stringent regardless of the results of subsequent NO_X emissions reduction surveys or survey series.

(n) *Effect of benzene survey failure.* (1) On each occasion that a covered area fails a benzene content survey series, conducted pursuant to § 80.68, the benzene content standards for that covered area beginning in the year following the year of the failure shall be made more stringent as follows:

(i) The average benzene content shall be decreased by 0.05% by volume; and

(ii) The maximum benzene content for each gallon of averaged gasoline shall be decreased by 0.10% by volume.

(2) In the event that a covered area for which the benzene standards have

been made more stringent passes all benzene content survey series conducted in two consecutive years, the benzene standards for that covered area beginning in the year following the second year of passed survey series shall be made less stringent as follows:

(i) The average benzene content shall be increased by 0.05% by volume; and

(ii) The maximum benzene content for each gallon of averaged gasoline shall be increased by 0.10% by volume.

(3) In the event that a covered area for which the benzene standards have been made less stringent fails a subsequent benzene content survey series:

(i) The standards for benzene content for that covered area beginning in the year following this subsequent failure shall be the more stringent standards which were in effect prior to the operation of paragraph (n)(2) of this section; and

(ii) The standards for benzene content for that covered area thereafter shall not be made less stringent regardless of the results of subsequent benzene content surveys.

(o) [Reserved]

(p) *Effective date for changed minimum or maximum standards.* In the case of any minimum or maximum standard that is changed to be more stringent by operation of paragraphs (k), (m), (n), or (o) of this section, the effective date for such change shall be the following number of days after the date EPA announces the change:

(1) 90 days for refinery or import facilities;

(2) 180 days for retail outlets and wholesale purchaser-consumer facilities; and

(3) 150 days for all other facilities.

(q) *Refineries and importers subject to adjusted standards.* Standards for average compliance that are adjusted to be more or less stringent by operation of paragraphs (k), (l) (m) or (n) of this section apply to average reformulated gasoline produced at each refinery or imported by each importer as follows:

(1) Adjusted standards for a covered area apply to averaged reformulated gasoline that is produced at a refinery if:

(i) Any averaged reformulated gasoline from that refinery supplied the covered area during any year a survey was conducted which gave rise to a standards adjustment; or

(ii) Any averaged reformulated gasoline from that refinery supplies the covered area during any year that the standards are more stringent than the initial standards; unless

(iii) The refiner is able to show that the volume of averaged reformulated gasoline from a refinery that supplied the covered area during any years under paragraphs (q)(1)(i) or (ii) of this section was less than one percent of the reformulated gasoline produced at the refinery during that year, or 100,000 barrels, whichever is less.

(2) Adjusted standards for a covered area apply to averaged reformulated gasoline that is imported by an importer if:

(i) The covered area with the adjusted standard is located in Petroleum Administration for Defense District (PADD) I, and the gasoline is imported at a facility located in PADDs I, II or III;

(ii) The covered area with the adjusted standard is located in PADD II, and the gasoline is imported at a facility located in PADDs I, II, III, or IV;

(iii) The covered area with the adjusted standard is located in PADD III, and the gasoline is imported at a facility located in PADDs II, III, or IV;

(iv) The covered area with the adjusted standard is located in PADD IV, and the gasoline is imported at a facility located in PADDs II, or IV; or

(v) The covered area with the adjusted standard is located in PADD V, and the gasoline is imported at a facility located in PADDs III, IV, or V; unless

(vi) Any gasoline which is imported by an importer at any facility located in any PADD supplies the covered area, in which case the adjusted standard also applies to averaged gasoline imported at that facility by that importer.

(3) Any gasoline that is transported in a fungible manner by a pipeline, barge, or vessel shall be considered to have supplied each covered area that is supplied with any gasoline by that pipeline, or barge or vessel shipment, unless the refiner or importer is able to establish that the gasoline it produced

or imported was supplied only to a smaller number of covered areas.

(4) Adjusted standards apply to all averaged reformulated gasoline produced by a refinery or imported by an importer identified in this paragraph (q), except:

(i) In the case of adjusted VOC standards for a covered area located in VOC Control Region 1, the adjusted VOC standards apply only to averaged reformulated gasoline designated as VOC-controlled intended for use in VOC Control Region 1; and

(ii) In the case of adjusted VOC standards for a covered area located in VOC Control Region 2, the adjusted VOC standards apply only to averaged reformulated gasoline designated as VOC-controlled intended for use in VOC Control Region 2.

(r) *Definition of PADD*. For the purposes of this section only, the following definitions of PADDs apply:

(1) The following States are included in PADD I:

Connecticut	New Hampshire
Delaware	New Jersey
District of Columbia	North Carolina
Florida	Pennsylvania
Georgia	Rhode Island
Maine	South Carolina
Maryland	Vermont
Massachusetts	Virginia
New York	West Virginia

(2) The following States are included in PADD II:

Illinois	Nebraska
Indiana	North Dakota
Iowa	Ohio
Kansas	Oklahoma
Kentucky	South Dakota
Michigan	Tennessee
Minnesota	Wisconsin
Missouri	

(3) The following States are included in PADD III:

Alabama	Mississippi
Arkansas	New Mexico
Louisiana	Texas

(4) The following States are included in PADD IV:

Colorado	Utah
Idaho	Wyoming
Montana	

(5) The following States are included in PADD V:

Arizona	Nevada
California	Oregon
	Washington

[59 FR 7813, Feb. 16, 1994, as amended at 59 FR 36958, July 20, 1994; 61 FR 12041, Mar. 25, 1996; 62 FR 68205, Dec. 31, 1997; 64 FR 37689, July 13, 1999; 66 FR 37164, July 17, 2001; 71 FR 74566, Dec. 15, 2005; 71 FR 8972, Feb. 22, 2006; 71 FR 26698, May 8, 2006; 72 FR 8543, Feb. 26, 2007]

§ 80.42 Simple emissions model.

(a) *VOC emissions*. The following equations shall comprise the simple model for VOC emissions. The simple model for VOC emissions shall be used only in determining toxics emissions:

Summer = The period of May 1 through September 15

Winter = The period of September 16 through April 30

EXHVOCS1 = Exhaust nonmethane, nonethane VOC emissions from the fuel in question, in grams per mile, for VOC control region 1 during the summer period.

EXHVOCS2 = Exhaust nonmethane, nonethane VOC emissions from the fuel in question, in grams per mile, for VOC control region 2 during the summer period.

EXHVOCW = Exhaust nonmethane, nonethane VOC emissions from the fuel in question, in grams per mile, during the winter period.

EVPVOCS1 = Evaporative nonmethane, nonethane VOC emissions from the fuel in question, in grams per mile, for VOC control region 1 during the summer period.

EVPVOCS2 = Evaporative nonmethane, nonethane VOC emissions from the fuel in question, in grams per mile, for VOC control region 2 during the summer period.

RLVOCS1 = Running loss nonmethane, nonethane VOC emissions from the fuel in question, in grams per mile, for VOC control region 1 during the summer period.

RLVOCS2 = Running loss nonmethane, nonethane VOC emissions from the fuel in question, in grams per mile, for VOC control region 2 during the summer period.

REFVOCS1 = Refueling nonmethane, nonethane VOC emissions from the fuel in question, in grams per mile, for VOC control region 1 during the summer period.

REFVOCS2 = Refueling nonmethane, nonethane VOC emissions from the fuel in question, in grams per mile, for VOC control region 2 during the summer period.

OXCON = Oxygen content of the fuel in question, in terms of weight percent (as measured under § 80.46)

RVP = Reid vapor pressure of the fuel in question, in pounds per square inch (psi)

(1) The following equations shall comprise the simple model for VOC

emissions in VOC Control Region 1 during the summer period:

$$EXHVOCS1 = 0.444 \times (1 - (0.127/2.7) \times OXCON)$$
$$EVPVOCS1 = 0.7952 - 0.2461 \times RVP + 0.02293 \times RVP \times RVP$$
$$RLVOCS1 = -0.734 + 0.1096 \times RVP + 0.002791 \times RVP \times RVP$$
$$REFVOCS1 = 0.04 \times ((0.1667 \times RVP) - 0.45)$$

(2) The following equations shall comprise the simple model for VOC emissions in VOC Control Region 2 during the summer period:

$$EXHVOCS2 = 0.444 \times (1 - (0.127/2.7) \times OXCON)$$
$$EVPVOCS2 = 0.813 - 0.2393 \times RVP + 0.021239 \times RVP \times RVP$$
$$RLVOCS2 = 0.2963 - 0.1306 \times RVP + 0.016255 \times RVP \times RVP$$
$$REFVOCS2 = 0.04 \times ((0.1667 \times RVP) - 0.45)$$

(3) The following equation shall comprise the simple model for VOC emissions during the winter period:

$$EXHVOCW = 0.656 \times (1 - (0.127/2.7) \times OXCON)$$

(b) *Toxics emissions.* The following equations shall comprise the simple model for toxics emissions:

EXHBEN = Exhaust benzene emissions from the fuel in question, in milligrams per mile
EVPBEN = Evaporative benzene emissions from the fuel in question, in milligrams per mile
HSBEN = Hot soak benzene emissions from the fuel in question, in milligrams per mile
DIBEN = Diurnal benzene emissions from the fuel in question, in milligrams per mile
RLBEN = Running loss benzene emissions from the fuel in question, in milligrams per mile
REFBEN = Refueling benzene emissions from the fuel in question, in milligrams per mile
MTBE = Oxygen content of the fuel in question in the form of MTBE, in terms of weight percent (as measured under § 80.46)
ETOH = Oxygen content of the fuel in question in the form of ethanol, in terms of weight percent (as measured under § 80.46)
ETBE = Oxygen content of the fuel in question in the form of ETBE, in terms of weight percent (as measured under § 80.46)
FORM = Formaldehyde emissions from the fuel in question, in milligrams per mile
ACET = Acetaldehyde emissions from the fuel in question, in milligrams per mile
POM = Emissions of polycyclic organic matter from the fuel in question, in milligrams per mile
BUTA = Emissions of 1,3-Butadiene from the fuel in question, in milligrams per mile
FBEN = Fuel benzene of the fuel in question, in terms of volume percent (as measured under § 80.46)
FAROM = Fuel aromatics of the fuel in question, in terms of volume percent (as measured under § 80.46)
TOXREDS1 = Total toxics reduction of the fuel in question during the summer period for VOC control region 1 in percent
TOXREDS2 = Total toxics reduction of the fuel in question during the summer period for VOC control region 2 in percent
TOXREDW = Total toxics reduction of the fuel in question during the winter period in percent

(1) The following equations shall comprise the simple model for toxics emissions in VOC control region 1 during the summer period:

$$TOXREDS1 = [100 \times (53.2 - EXHBEN - EVPBEN - RLBEN - REFBEN - FORM - ACET - BUTA - POM)] / 53.2$$
$$EXHBEN = [1.884 + 0.949 \times FBEN + 0.113 \times (FAROM - FBEN)) / 100] \times 1000 \times EXHVOCS1$$
$$EVPBEN = HSBEN + DIBEN$$
$$HSBEN = FBEN \times (EVPVOCS1 \times 0.679) \times 1000 \times [(1.4448 - (0.0684 \times MTBE/2.0) - (0.080274 \times RVP)) / 100]$$
$$DIBEN = FBEN \times (EVPVOCS1 \times 0.321) \times 1000 \times [(1.3758 - (0.0579 \times MTBE/2.0) - (0.080274 \times RVP)) / 100]$$
$$RLBEN = FBEN \times RLVOCS1 \times 1000 \times [(1.4448 - (0.0684 \times MTBE/2.0) - (0.080274 \times RVP)) / 100]$$
$$REFBEN = FBEN \times REFVOCS1 \times 1000 \times [(1.3972 - (0.0591 \times MTBE / 2.0) - (0.081507 \times RVP)) / 100]$$
$$BUTA = 0.00556 \times EXHVOCS1 \times 1000$$
$$POM = 3.15 \times EXHVOCS1$$

(i) For any oxygenate or mixtures of oxygenates, the formaldehyde and acetaldehyde shall be calculated with the following equations:

$$FORM = 0.01256 \times EXHVOCS1 \times 1000 \times [1 + (0.421 / 2.7) \times MTBE + TAME) + (0.358 / 3.55) \times ETOH + (0.137 / 2.7) \times (ETBE + ETAE)]$$
$$ACET = 0.00891 \times EXHVOCS1 \times 1000 \times [1 + (0.078 / 2.7) \times (MTBE + TAME) + (0.865 / 3.55) \times ETOH + (0.867 / 2.7) \times (ETBE + ETAE)]$$

(ii) When calculating formaldehyde and acetaldehyde emissions using the equations in paragraph (b)(1)(i) of this section, oxygen in the form of alcohols which are more complex or have higher molecular weights than ethanol shall be evaluated as if it were in the form of ethanol. Oxygen in the form of methyl ethers other than TAME and MTBE shall be evaluated as if it were in the form of MTBE. Oxygen in the form of ethyl ethers other than ETBE shall be evaluated as if it were in the form of ETBE. Oxygen in the form of non-

methyl, non-ethyl ethers shall be evaluated as if it were in the form of ETBE. Oxygen in the form of methanol or non-alcohol, non-ether oxygenates shall not be evaluated with the Simple Model, but instead must be evaluated through vehicle testing under the Complex Model per § 80.48.

(2) The following equations shall comprise the simple model for toxics emissions in VOC control region 2 during the summer period:

TOXREDS2 = 100 × (52.1 − EXHBEN − EVPBEN − RLBEN − REFBEN − FORM − ACET − BUTA − POM) / 52.1

EXHBEN = [(1.884 + 0.949 × FBEN + 0.113 × (FAROM − FBEN)) / 100] × 1000 × EXHVOCS2

EVPBEN = HSBEN + DIBEN

HSBEN = FBEN × (EVPVOCS2 × 0.679) × 1000 × [(1.4448 − (0.0684 × MTBE / 2.0) − (0.080274 × RVP)) / 100]

DIBEN = FBEN × (EVPVOCS2 × 0.321) × 1000 × [(1.3758 − (0.0579 × MTBE / 2.0) − (0.080274 × RVP)) / 100]

RLBEN = FBEN × RLVOCS2 × 1000 × [(1.4448 − (0.0684 × MTBE / 2.0) − (0.080274 × RVP)) / 100]

REFBEN = FBEN × REFVOCS2 × 1000 × [(1.3972 − (0.0591 × MTBE / 2.0) − (0.081507 × RVP)) / 100]

BUTA = 0.00556 × EXHVOCS2 × 1000

POM = 3.15 × EXHVOCS2

(i) For any oxygenate or mixtures of oxygenates, the formaldehyde and acetaldehyde shall be calculated with the following equations:

FORM = 0.01256 × EEXHVOCS2 × 1000 × [1 + (0.421 / 2.7) × (MTBE + TAME) + (0.358 / 3.55) × ETOH + (0.137 / 2.7) × (ETBE + ETAE)]

ACET = 0.00891 × EXHVOCS2 × 1000 × [1 + (0.078 / 2.7) × (MTBE + TAME) + (0.865 / 3.55) × ETOH + (0.867 / 2.7) × (ETBE + ETAE)]

(ii) When calculating formaldehyde and acetaldehyde emissions using the equations in paragraph (b)(2)(i) of this section, oxygen in the form of alcohols which are more complex or have higher molecular weights than ethanol shall be evaluated as if it were in the form of ethanol. Oxygen in the form of methyl ethers other than TAME and MTBE shall be evaluated as if it were in the form of MTBE. Oxygen in the form of ethyl ethers other than ETBE shall be evaluated as if it were in the form of ETBE. Oxygen in the form of non-methyl, non-ethyl ethers shall be evaluated as if it were in the form of ETBE. Oxygen in the form of methanol or non-alcohol, non-ether oxygenates shall not be evaluated with the Simple Model, but instead must be evaluated through vehicle testing under the Complex Model per § 80.48.

(3) The following equations shall comprise the simple model for toxics emissions during the winter period:

TOXREDW = 100 × (55.5 − EXHBEN − FORM − ACET − BUTA − POM) / 55.5

EXHBEN = [(1.884 + 0.949 × FBEN + 0.113 × (FAROM − FBEN)) / 100] × 1000 × EXHVOCW

BUTA = 0.00556 × EXHVOCW × 1000

POM = 2.13 × EXHVOCW

(i) For any oxygenate or mixtures of oxygenates, the formaldehyde and acetaldehyde shall be calculated with the following equations:

FORM = 0.01256 × EXHVOCS1 × 1000 × [1 + (0.421 / 2.7) × (MTBE + TAME) + (0.358 / 3.55) × ETOH + (0.137 / 2.7) × (ETBE + ETAE)]

ACET = 0.00891 × EXHVOCS1 × 1000 × [1 + (0.078 / 2.7) × (MTBE + TAME) + (0.865 / 3.55) × ETOH + (0.867 / 2.7) × (ETBE + ETAE)]

(ii) When calculating formaldehyde and acetaldehyde emissions using the equations in paragraph (b)(3)(i) of this section, oxygen in the form of alcohols which are more complex or have higher molecular weights than ethanol shall be evaluated as if it were in the form of ethanol. Oxygen in the form of methyl ethers other than TAME and MTBE shall be evaluated as if it were in the form of MTBE. Oxygen in the form of ethyl ethers other than ETBE shall be evaluated as if it were in the form of ETBE. Oxygen in the form of non-methyl, non-ethyl ethers shall be evaluated as if it were in the form of ETBE. Oxygen in the form of methanol or non-alcohol, non-ether oxygenates shall not be evaluated with the Simple Model, but instead must be evaluated through vehicle testing under the Complex Model per § 80.48.

(4) If the fuel aromatics content of the fuel in question is less than 10 volume percent, then an FAROM value of 10 volume percent shall be used when evaluating the toxics emissions equations given in paragraphs (b)(1), (b)(2), and (b)(3) of this section.

(c) *Limits of the model.* (1) The model given in paragraphs (a) and (b) of this section shall be used as given to determine VOC and toxics emissions, respectively, if the properties of the fuel

being evaluated fall within the ranges shown in this paragraph (c). If the properties of the fuel being evaluated fall outside the range shown in this paragraph (c), the model may not be used to determine the VOC or toxics performance of the fuel:

Fuel parameter	Range
Benzene content	0.0–4.9 vol %.
RVP	6.6–9.0 psi.[1]
Oxygenate content	0–4.0 wt %.
Aromatics content	0–55 vol %.

[1] For gasoline sold in California, the applicable RVP range shall be 6.4–9.0 psi.

(2) The model given in paragraphs (a) and (b) of this section shall be effective from January 1, 1995 through December 31, 1997, unless extended by action of the Administrator.

[59 FR 7813, Feb. 16, 1994, as amended at 59 FR 36958, July 20, 1994; 61 FR 20738, May 8, 1996]

§§ 80.43–80.44 [Reserved]

§ 80.45 Complex emissions model.

(a) *Definition of terms.* For the purposes of this section, the following definitions shall apply:

Target fuel = The fuel which is being evaluated for its emissions performance using the complex model
OXY = Oxygen content of the target fuel in terms of weight percent
SUL = Sulfur content of the target fuel in terms of parts per million by weight
RVP = Reid Vapor Pressure of the target fuel in terms of pounds per square inch
E200 = 200 °F distillation fraction of the target fuel in terms of volume percent
E300 = 300 °F distillation fraction of the target fuel in terms of volume percent
ARO = Aromatics content of the target fuel in terms of volume percent
BEN = Benzene content of the target fuel in terms of volume percent
OLE = Olefins content of the target fuel in terms of volume percent
MTB = Methyl tertiary butyl ether content of the target fuel in terms of weight percent oxygen
ETB = Ethyl tertiary butyl ether content of the target fuel in terms of weight percent oxygen
TAM = Tertiary amyl methyl ether content of the target fuel in terms of weight percent oxygen
ETH = Ethanol content of the target fuel in terms of weight percent oxygen
exp = The function that raises the number e (the base of the natural logarithm) to the power in its domain
Phase I = The years 1995–1999
Phase II = Year 2000 and beyond

(b) *Weightings and baselines for the complex model.* (1) The weightings for normal and higher emitters (w_1 and w_2, respectively) given in table 1 shall be used to calculate the exhaust emission performance of any fuel for the appropriate pollutant and Phase:

TABLE 1—NORMAL AND HIGHER EMITTER WEIGHTINGS FOR EXHAUST EMISSIONS

	Phase I		Phase II	
	VOC & toxics	NO_X	VOC & toxics	NO_X
Normal Emitters (w_1)	0.52	0.82	0.444	0.738
Higher Emitters (w_2)	0.48	0.18	0.556	0.262

(2) The following properties of the baseline fuels shall be used when determining baseline mass emissions of the various pollutants:

TABLE 2—SUMMER AND WINTER BASELINE FUEL PROPERTIES

Fuel property	Summer	Winter
Oxygen (wt %)	0.0	0.0
Sulfur (ppm)	339	338
RVP (psi)	8.7	11.5
E200 (%)	41.0	50.0
E300 (%)	83.0	83.0
Aromatics (vol %)	32.0	26.4
Olefins (vol %)	9.2	11.9
Benzene (vol %)	1.53	1.64

(3) The baseline mass emissions for VOC, NO_X and toxics given in tables 3, 4 and 5 of this paragraph (b)(3) shall be used in conjunction with the complex model during the appropriate Phase and season:

TABLE 3—BASELINE EXHAUST EMISSIONS

Exhaust pollutant	Phase I		Phase II	
	Summer (mg/mile)	Winter (mg/mile)	Summer (mg/mile)	Winter (mg/mile)
VOC	446.0	660.0	907.0	1341.0
NO_X	660.0	750.0	1340.0	1540.0
Benzene	26.10	37.57	53.54	77.62
Acetaldehyde	2.19	3.57	4.44	7.25
Formaldehyde	4.85	7.73	9.70	15.34
1,3-Butadiene	4.31	7.27	9.38	15.84
POM	1.50	2.21	3.04	4.50

TABLE 4—BASELINE NON-EXHAUST EMISSIONS (SUMMER ONLY)

Non-exhaust pollutant	Phase I		Phase II	
	Region 1 (mg/mile)	Region 2 (mg/mile)	Region 1 (mg/mile)	Region 2 (mg/mile)
VOC	860.48	769.10	559.31	492.07

TABLE 4—BASELINE NON-EXHAUST EMISSIONS (SUMMER ONLY)—Continued

Non-exhaust pollutant	Phase I		Phase II	
	Region 1 (mg/mile)	Region 2 (mg/mile)	Region 1 (mg/mile)	Region 2 (mg/mile)
Benzene	9.66	8.63	6.24	5.50

TABLE 5—TOTAL BASELINE VOC, NO_X AND TOXICS EMISSIONS

Pollutant	Summer (mg/mile)				Winter (mg/mile)			
	Phase I		Phase II		Phase I		Phase II	
	Region 1	Region 2	Region 1	Region 2	Region 1	Region 2	Region 1	Region 2
NO_X	660.0	660.0	1340.0	1340.0	750.0	750.0	1540.0	1540.0
VOC	1306.5	1215.1	1466.3	1399.1	660.0	660.0	1341.0	1341.0
Toxics	48.61	47.58	86.34	85.61	58.36	58.36	120.55	120.55

(c) *VOC performance.* (1) The exhaust VOC emissions performance of gasolines shall be given by the following equations:

$$VOCE = VOC(b)+(VOC(b)\times Y_{voc}(t)/100)$$
$$Y_{voc}(t) = [(w_1\times N_v)+(w_2\times H_v)-1]\times 100$$

where

VOCE = Exhaust VOC emissions in milligrams/mile

$Y_{voc}(t)$ = Exhaust VOC performance of the target fuel in terms of percentage change from baseline

VOC(b) = Baseline exhaust VOC emissions as defined in paragraph (b)(2) of this section for the appropriate Phase and season

$N_v = [\exp v_1(t)]/[\exp v_1(b)]$

$H_v = [\exp v_2(t)]/[\exp v_2(b)]$

w_1 = Weighting factor for normal emitters as defined in paragraph (b)(1) of this section for the appropriate Phase

w_2 = Weighting factor for higher emitters as defined in paragraph (b)(1) of this section for the appropriate Phase

$v_1(t)$ = Normal emitter VOC equation as defined in paragraph (c)(1)(i) of this section, evaluated using the target fuel's properties subject to paragraphs (c)(1) (iii) and (iv) of this section

$v_2(t)$ = Higher emitter VOC equation as defined in paragraph (c)(1)(ii) of this section, evaluated using the target fuel's properties subject to paragraphs (c)(1) (iii) and (iv) of this section

$v_1(b)$ = Normal emitter VOC equation as defined in paragraph (c)(1)(i) of this section, evaluated using the base fuel's properties

$v_2(b)$ = Higher emitter VOC equation as defined in paragraph (c)(1)(ii) of this section, evaluated using the base fuel's properties

(i) *Consolidated VOC equation for normal emitters.*

$$v_1 = (-0.003641 \times OXY) + (0.0005219 \times SUL) + (0.0289749 \times RVP) + (-0.014470 \times E200) + (-0.068624 \times E300) + (0.0323712 \times ARO) + (-0.002858 \times OLE) + (0.0001072 \times E2002) + (0.0004087 \times E3002) + (-0.0003481 \times ARO \times E300)$$

(ii) *VOC equation for higher emitters.*

$$v_2 = (-0.003626 \times OXY) + (-5.40\times10^{-5} \times SUL) + (0.043295 \times RVP) + (-0.013504 \times E200) + (-0.062327 \times E300) + (0.0282042 \times ARO) + (-0.002858 \times OLE) + (0.000106 \times E200^2) + (0.000408 \times E300^2) + (-0.000287 \times ARO \times E300)$$

(iii) *Flat line extrapolations.* (A) During Phase I, fuels with E200 values greater than 65.83 percent shall be evaluated with the E200 fuel parameter set equal to 65.83 percent when calculating $Y_{voc}(t)$ and VOCE using the equations described in paragraphs (c)(1) (i) and (ii) of this section. Fuels with E300 values greater than E300* (calculated using the equation E300* = 80.32+[0.390×ARO]) shall be evaluated with the E300 parameter set equal to E300* when calculating VOCE using the equations described in paragraphs (c)(1) (i) and (ii) of this section. For E300* values greater than 94, the linearly extrapolated model presented in paragraph (c)(1)(iv) of this section shall be used.

(B) During Phase II, fuels with E200 values greater than 65.52 percent shall be evaluated with the E200 fuel parameter set equal to 65.52 percent when calculating VOCE using the equations described in paragraphs (c)(1) (i) and (ii)

of this section. Fuels with E300 values greater than E300* (calculated using the equation E300* = 79.75+[0.385 × ARO]) shall be evaluated with the E300 parameter set equal to E300* when calculating VOCE using the equations described in paragraphs (c)(1) (i) and (ii) of this section. For E300* values greater than 94, the linearly extrapolated model presented in paragraph (c)(1)(iv) of this section shall be used.

(iv) *Linear extrapolations.* (A) The equations in paragraphs (c)(1) (i) and (ii) of this section shall be used within the allowable range of E300, E200, and ARO for the appropriate Phase, as defined in table 6:

TABLE 6—ALLOWABLE RANGES OF E200, E300, AND ARO FOR THE EXHAUST VOC EQUATIONS IN PARAGRAPHS (C)(1)(I) AND (II) OF THIS SECTION

Fuel parameter	Phase I		Phase II	
	Lower limit	Higher limit	Lower limit	Higher limit
E200 ..	33.00	65.83	33.00	65.52
E300 ..	72.00	Variable [1]	72.00	Variable [2]
ARO ...	18.00	46.00	18.00	46.00

[1] Higher E300 limit = lower of 94.0 or 80.32+[0.390×(ARO)].
[2] Higher E300 limit = lower of 94.0 or 79.75+[0.385×(ARO)].

(B) For fuels with E200, E300 and/or ARO levels outside the ranges defined in table 6, $Y_{VOC}(t)$ shall be defined:

(*1*) For Phase I:

$$Y_{VOC}(t) = 100\% \times 0.52 \times [\exp(v_1(et)) / \exp(v_1(b)) - 1] + 100\% \times 0.48 \times [\exp(v_2(et)) / \exp(v_2(b)) - 1] + \{100\% \times 0.52 \times [\exp(v^1(et)) / \exp(v_1(b))] \times [\{[(0.0002144 \times E200_{et}) - 0.014470] \times \Delta E200\} + \{[(0.0008174 \times E300_{et}) - 0.068624 - (0.000348 \times ARO_{et})] \times \Delta E300\} + \{[(-0.000348 \times E300_{et}) + .0323712] \times \Delta ARO\}]\} + \{100\% \times 0.48 \times [\exp(v_1(et)) / \exp(v_2(b))\}] \times [\{[(0.000212 \times E200_{et}) - 0.01350] \times \Delta E200\} + \{[(0.000816 \times E300_{et}) - 0.06233 - (0.00029 \times ARO_{et})] \times \Delta E300\} + \{[(-0.00029 \times E300\}) + 0.028204] \times \Delta ARO\}]\}$$

(*2*) For Phase II:

$$Y_{VOC}(t) = 100\% \times 0.444 \times [\exp(v_1(et)) / \exp(v_1(b)) - 1] + 100\% \times 0.556 \times [\exp(v_2(et)) / \exp(v_2(b)) - 1] + \{100\% \times 0.444 \times [\exp(v_1(et)) / \exp(v_1(b))] \times [\{[(0.0002144 \times E200_{et}) - 0.014470] \times \Delta E200\} + \{[(0.0008174 \times E300_{et}) - 0.068624 - (0.000348 \times ARO_{et})] \times \Delta E300\} + \{[(-0.000348 \times E300_{et}) + 0.0323712] \times \Delta ARO\}]\} + \{100\% \times 0.556 \times [\exp(v_2(et)) / \exp(v_2(b))] \times [\{[(0.000212 \times E200_{et}) - 0.01350] \times \Delta E200\} + \{[(0.000816 \times E300_{et}) - 0.06233 - (0.00029 \times ARO_{et})] \times \Delta E300\} + \{[(-0.00029 \times E300_{et}) + 0.028204] \times \Delta ARO\}]\}$$

(C) During Phase I, the ''edge target'' fuel shall be identical to the target fuel for all fuel parameters, with the following exceptions:

(*1*) If the E200 level of the target fuel is less than 33 volume percent, then the E200 value for the ''edge target'' fuel shall be set equal to 33 volume percent.

(*2*) If the aromatics level of the target fuel is less than 18 volume percent, then the ARO value for the ''edge target'' fuel shall be set equal to 18 volume percent.

(*3*) If the aromatics level of the target fuel is greater than 46 volume percent, then the ARO value for the ''edge target'' fuel shall be set equal to 46 volume percent.

(*4*) If the E300 level of the target fuel is less than 72 volume percent, then the E300 value for the ''edge target'' fuel shall be set equal to 72 volume percent.

(*5*) If the E300 level of the target fuel is greater than 95 volume percent, then the E300 value of the target fuel shall be set equal to 95 volume percent for the purposes of calculating VOC emissions with the Phase I equation given in paragraph (c)(1)(iv)(B) of this section.

(*6*) If [80.32 + (0.390 × ARO)] exceeds 94 for the target fuel, and the target fuel value for E300 exceeds 94, then the E300 value for the ''edge target'' fuel shall be set equal to 94 volume percent.

(*7*) If the E200 level of the target fuel is less than 33 volume percent, then ΔE200 shall be set equal to (E200 − 33 volume percent).

(*8*) If the E200 level of the target fuel equals or exceeds 33 volume percent, then ΔE200 shall be set equal to zero.

(*9*) If the aromatics level of the target fuel is less than 18 volume percent, then ΔARO shall be set equal to (ARO − 18 volume percent). If the aromatics level of the target fuel is less than 10 volume percent, then ΔARO shall be set equal to −8 volume percent.

(*10*) If the aromatics level of the target fuel is greater than 46 volume percent, then ΔARO shall be set equal to (ARO − 46 volume percent).

(*11*) If neither of the conditions established in paragraphs (c)(1)(iv)(C)(*9*) and (*10*) of this section are met, then ΔARO shall be set equal to zero.

(*12*) If the E300 level of the target fuel is less than 72 percent, then ΔE300 shall be set equal to (E300 − 72 percent).

(*13*) If the E300 level of the target fuel is greater than 94 volume percent and [80.32+(0.390xARO)] also is greater than 94, then ΔE300 shall be set equal to (E300 − 94 volume percent). If the E300 level of the target fuel is greater than 95 volume percent and [80.32+(0.390×ARO)] also is greater than 94, then ΔE300 shall be set equal to 1 volume percent.

(*14*) If neither of the conditions established in paragraphs (c)(1)(iv)(C)(*12*) and (*13*) of this section are met, then ΔE300 shall be set equal to zero.

(D) During Phase II, the ''edge target'' fuel is identical to the target fuel for all fuel parameters, with the following exceptions:

(*1*) If the E200 level of the target fuel is less than 33 volume percent, then the E200 value for the ''edge target'' fuel shall be set equal to 33 volume percent.

(*2*) If the aromatics level of the target fuel is less than 18 volume percent, then the ARO value for the ''edge target'' fuel shall be set equal to 18 volume percent.

(*3*) If the aromatics level of the target fuel is greater than 46 volume percent, then the ARO value for the ''edge target'' fuel shall be set equal to 46 volume percent.

(*4*) If the E300 level of the target fuel is less than 72 volume percent, then the E300 value for the ''edge target'' fuel shall be set equal to 72 volume percent.

(*5*) If the E300 level of the target fuel is greater than 95 volume percent, then the E300 value of the target fuel shall be set equal to 95 volume percent for the purposes of calculating VOC emissions with the Phase II equation given in paragraph (c)(1)(iv)(B) of this section.

(*6*) If [79.75 + (0.385 × ARO)] exceeds 94 for the target fuel, and the target fuel value for E300 exceeds 94, then the E300 value for the ''edge target'' fuel shall be set equal to 94 volume percent.

(*7*) If the E200 level of the target fuel is less than 33 volume percent, then ΔE200 shall be set equal to (E200 − 33 volume percent).

(*8*) If the E200 level of the target fuel equals or exceeds 33 volume percent, then ΔE200 shall be set equal to zero.

(*9*) If the aromatics level of the target fuel is less than 18 volume percent and greater than or equal to 10 volume percent, then ΔARO shall be set equal to (ARO − 18 volume percent). If the aromatics level of the target fuel is less than 10 volume percent, then ΔARO shall be set equal to −8 volume percent.

(*10*) If the aromatics level of the target fuel is greater than 46 volume percent, then ΔARO shall be set equal to (ARO − 46 volume percent).

(*11*) If neither of the conditions established in paragraphs (c)(1)(iv)(D)(9) and (10) of this section are met, then ΔARO shall be set equal to zero.

(*12*) If the E300 level of the target fuel is less than 72 percent, then ΔE300 shall be set equal to (E300 − 72 percent).

(*13*) If the E300 level of the target fuel is greater than 94 volume percent and (79.75 + (0.385 × ARO)) also is greater than 94, then ΔE300 shall be set equal to (E300 − 94 volume percent). If the E300 level of the target fuel is greater than 95 volume percent and (79.75 + (0.385 × ARO)) also is greater than 94, then ''E300 shall be set equal to 1 volume percent.

(2) The winter exhaust VOC emissions performance of gasolines shall be given by the equations presented in paragraph (c)(1) of this section with the RVP value set to 8.7 psi for both the baseline and target fuels.

(3) The nonexhaust VOC emissions performance of gasolines in VOC Control Region 1 shall be given by the following equations, where:

VOCNE1 = Total nonexhaust emissions of volatile organic compounds in VOC Control Region 1 in grams per mile

VOCDI1 = Diurnal emissions of volatile organic compounds in VOC Control Region 1 in grams per mile

VOCHS1 = Hot soak emissions of volatile organic compounds in VOC Control Region 1 in grams per mile

VOCRL1 = Running loss emissions of volatile organic compounds in VOC Control Region 1 in grams per mile
VOCRF1 = Refueling emissions of volatile organic compounds in VOC Control Region 1 in grams per mile

(i) During Phase I:

VOCNE1 = VOCDI1 + VOCHS1 + VOCRL1 + VOCRF1
VOCDI1 = [0.00736 × (RVP²)] − [0.0790 × RVP] + 0.2553
VOCHS1 = [0.01557 × (RVP²)] − [0.1671 × RVP] + 0.5399
VOCRL1 = [0.00279 × (RVP²)] + [0.1096 × RVP] − 0.7340
VOCRF1 = [0.006668 × RVP] − 0.0180

(ii) During Phase II:

VOCNE1 = VOCDI1 + VOCHS1 + VOCRL1 + VOCRF1
VOCDI1 = [0.007385 × (RVP²)] − [0.08981 × RVP] + 0.3158
VOCHS1 = [0.006654 × (RVP²)] − [0.08094 × RVP] + 0.2846
VOCRL1 = [0.017768 × (RVP²)] − [0.18746 × RVP] + 0.6146
VOCRF1 = [0.004767 × RVP] + 0.011859

(4) The nonexhaust VOC emissions performance of gasolines in VOC Control Region 2 shall be given by the following equations, where:

VOCNE2 = Total nonexhaust emissions of volatile organic compounds in VOC Control Region 2 in grams per mile
VOCDI2 = Diurnal emissions of volatile organic compounds in VOC Control Region 2 in grams per mile
VOCHS2 = Hot soak emissions of volatile organic compounds in VOC Control Region 2 in grams per mile
VOCRL2 = Running loss emissions of volatile organic compounds in VOC Control Region 2 in grams per mile
VOCRF2 = Refueling emissions of volatile organic compounds in VOC Control Region 2 in grams per mile

(i) During Phase I:

VOCNE2 = VOCDI2 + VOCHS2 + VOCRL2 + VOCRF2
VOCDI2 = [0.006818 × (RVP²)] − [0.07682 × RVP] + 0.2610
VOCHS2 = [0.014421 × (RVP²)] − [0.16248 × RVP] + 0.5520
VOCRL2 = [0.016255 × (RVP²)] − [0.1306 × RVP] + 0.2963
VOCRF2 = [0.006668 × RVP] − 0.0180

(ii) During Phase II:

VOCNE2 = VOCDI2 + VOCHS2 + VOCRL2 + VOCRF2
VOCDI2 = [0.004775 × (RVP²)] − [0.05872 × RVP] + 0.21306
VOCHS2 = [0.006078 × (RVP²)] − [0.07474 × RVP] + 0.27117
VOCRL2 = [0.016169 × (RVP²)] − [0.17206 × RVP] + 0.56724
VOCRF2 = [0.004767 × RVP] + 0.011859

(5) Winter VOC emissions shall be given by VOCE, as defined in paragraph (c)(2) of this section, using the appropriate baseline emissions given in paragraph (b)(3) of this section. Total nonexhaust VOC emissions shall be set equal to zero under winter conditions.

(6) *Total VOC emissions.* (i) Total summer VOC emissions shall be given by the following equations:

VOCS1 = (VOCE / 1000) + VOCNE1
VOCS2 = (VOCE / 1000) + VOCNE2
VOCS1 = Total summer VOC emissions in VOC Control Region 1 in terms of grams per mile
VOCS2 = Total summer VOC emissions in VOC Control Region 2 in terms of grams per mile

(ii) Total winter VOC emissions shall be given by the following equations:

VOCW = (VOCE/1000)
VOCW = Total winter VOC emissions in terms of grams per mile

(7) *Phase I total VOC emissions performance.* (i) The total summer VOC emissions performance of the target fuel in percentage terms from baseline levels shall be given by the following equations during Phase I:

VOCS1% = [100% × (VOCS1 − 1.306 g/mi)]/(1.306 g/mi)
VOCS2% = [100% × (VOCS2 − 1.215 g/mi)]/(1.215 g/mi)
VOC1% = Percentage change in VOC emissions from baseline levels in VOC Control Region 1
VOC2% = Percentage change in VOC emissions from baseline levels in VOC Control Region 2

(ii) The total winter VOC emissions performance of the target fuel in percentage terms from baseline levels shall be given by the following equations during Phase I:

VOCW% = [100% × (VOCW − 0.660 g/mi)]/(0.660 g/mi)
VOCW% = Percentage change in winter VOC emissions from baseline levels

(8) *Phase II total VOC emissions performance.* (i) The total summer VOC emissions performance of the target fuel in percentage terms from baseline

levels shall be given by the following equations during Phase II:

$$VOCS1\% = [100\% \times (VOCS1 - 1.4663\ g/mi)]/(1.4663\ g/mi)$$
$$VOCS2\% = [100\% \times (VOCS2 - 1.3991\ g/mi)]/(1.3991\ g/mi)$$

(ii) The total winter VOC emissions performance of the target fuel in percentage terms from baseline levels shall be given by the following equation during Phase II:

$$VOCW\% = [100\% \times (VOC - 1.341\ g/mi)] / (1.341\ g/mi)$$

(d) *NO_X performance.* (1) The summer NO_X emissions performance of gasolines shall be given by the following equations:

$$NO_X = NO_X(b) + [NO_X(b) \times Y(t)/100]$$
$$Y_{NOX}(t) = [(w_1 \times N_n) + (w_2 \times H_n) - 1] \times 100$$

where

NO_X = NO_X emissions in milligrams/mile
$Y_{NOx}(t)$ = NO_X performance of target fuel in terms of percentage change from baseline
$NO_X(b)$ = Baseline NO_X emissions as defined in paragraph (b)(2) of this section for the appropriate phase and season
$N_n = \exp n_1(t)/\exp n_1(b)$
$H_n = \exp n_2(t)/\exp n_2(b)$
w_1 = Weighting factor for normal emitters as defined in paragraph (b)(1) of this section for the appropriate Phase
w_2 = Weighting factor for higher emitters as defined in paragraph (b)(1) of this section for the appropriate Phase
$n_1(t)$ = Normal emitter NO_X equation as defined in paragraph (d)(1)(i) of this section, evaluated using the target fuel's properties subject to paragraphs (d)(1)(iii) and (iv) of this section
$n_2(t)$ = Higher emitter NO_X equation as defined in paragraph (d)(1)(ii) of this section, evaluated using the target fuel's properties subject to paragraphs (d)(1)(iii) and (iv) of this section
$n_1(b)$ = Normal emitter NO_X equation as defined in paragraph (d)(1)(i) of this section, evaluated using the base fuel's properties
$n_2(b)$ = Higher emitter NO_X equation as defined in paragraph (d)(1)(ii) of this section, evaluated using the base fuel's properties

(i) *Consolidated equation for normal emitters.*

$$n_1 = (0.0018571 \times OXY) + (0.0006921 \times SUL) + (0.0090744 \times RVP) + (0.0009310 \times E200) + (0.0008460 \times E300) + (0.0083632 \times ARO) + (-0.002774 \times OLE) + (-6.63 \times 10^{-7} \times SUL^2) + (-0.000119 \times ARO^2) + (0.0003665 \times OLE^2)$$

(ii) *Equation for higher emitters.*

$$n_2 = (-0.00913 \times OXY) + (0.000252 \times SUL) + (-0.01397 \times RVP) + (0.000931 \times E200) + (-0.00401 \times E300) + (0.007097 \times ARO) + (-0.00276 \times OLE) + (0.0003665 \times OLE^2) + (-7.995 \times 10^{-5} \times ARO^2)$$

(iii) *Flat line extrapolations.* (A) During Phase I, fuels with olefin levels less than 3.77 volume percent shall be evaluated with the OLE fuel parameter set equal to 3.77 volume percent when calculating NO_X performance using the equations described in paragraphs (d)(1)(i) and (ii) of this section. Fuels with aromatics levels greater than 36.2 volume percent shall be evaluated with the ARO fuel parameter set equal to 36.2 volume percent when calculating NO_X performance using the equations described in paragraphs (d)(1)(i) and (ii) of this section.

(B) During Phase II, fuels with olefin levels less than 3.77 volume percent shall be evaluated with the OLE fuel parameter set equal to 3.77 volume percent when calculating NO_X performance using the equations described in paragraphs (d)(1)(i) and (ii) of this section. Fuels with aromatics levels greater than 36.8 volume percent shall be evaluated with the ARO fuel parameter set equal to 36.8 volume percent when calculating NO_X performance using the equations described in paragraphs (d)(1)(i) and (ii) of this section.

(iv) *Linear extrapolations.* (A) The equations in paragraphs (d)(1)(i) and (ii) of this section shall be used within the allowable range of SUL, OLE, and ARO for the appropriate Phase, as defined in the following table 7:

TABLE 7—ALLOWABLE RANGES OF SUL, OLE, AND ARO FOR THE NO_X EQUATIONS IN PARAGRAPHS/(D)(1)(I) AND (II) OF THIS SECTION

Fuel parameter	Phase I		Phase II	
	Low end	High end	Low end	High end
SUL	10.0	450.0	10.0	450.0
OLE	3.77	19.0	3.77	19.0
ARO	18.0	36.2	18.0	36.8

(B) For fuels with SUL, OLE, and/or ARO levels outside the ranges defined in Table 7 of paragraph (d)(1)(iv)(A) of this section, $Y_{NOx}(t)$ shall be defined as:

(*1*) For Phase I:

$$Y_{NOx}(t) = 100\% \times 0.82 \times [\exp(n_1(et))/\exp(n_1(b)) - 1]$$

$+ 100\% \times 0.18 \times [\exp(n_2(et))/\exp(n_2(b)) - 1]$
$+ \{100\% \times 0.82 \times [\exp(n_1(et))/\exp(n_1(b))] \times [\{[(-0.00000133 \times SUL_{et}) + 0.000692] \times \Delta SUL\}$
$+ \{[(-0.000238 \times ARO_{et}) + 0.0083632] \times \Delta ARO\}$
$+ \{[(0.000733 \times OLE_{et}) - 0.002774] \times \Delta OLE\}]\}$
$+ \{100\% \times 0.18 \times [\exp(n_2(et))/\exp(n_2(b))] \times [\{0.000252 \times \Delta SUL\} +$
$+ \{[(-0.0001599 \times ARO_{et}) + 0.007097] \times \Delta ARO\}$
$+ \{[(0.000732 \times OLE_{et}) - 0.00276] \times \Delta OLE\}]\}$

(*2*) For Phase II:

$Y_{NO_X}(t) = 100\% \times 0.738 \times [\exp(n_1(et))/\exp(n_1(b)) - 1]$
$+ 100\% \times 0.262 \times [\exp(n_2(et)/\exp(n_2(b)) - 1]$
$+ [100\% \times 0.738 \times [\exp(n_1(et))/\exp(n_1(b))] \times [\{[(-0.00000133 \times SUL_{et}) + 0.000692] \times \Delta SUL\}$
$+ \{[(-0.000238 \times ARO_{et}) + 0.0083632] \times \Delta ARO\}$
$+ \{[(0.000733 \times OLE_{et}) - 0.002774] \times \Delta OLE\}]\}$
$+ \{100\% \times 0.262 \times [\exp(n_2(et))/\exp(n_2(b))] \times [\{0.000252 \times \Delta SUL\} +$
$\times [\{(-0.0001599 \times ARO_{et}) + 0.007097] \times \Delta ARO\}$
$+ \{[(0.000732 \times OLE_{et}) - 0.00276] \times \Delta OLE\}]\}$

Where:

n_1, n_2 = The equations defined in paragraphs (d)(1) (i) and (ii) of this section.

et = Collection of fuel parameters for the ''edge target'' fuel. These parameters are defined in paragraphs (d)(1)(iv) (C) and (D) of this section.

$n_1(et)$ = The function n_1 evaluated with ''edge target'' fuel parameters, which are defined in paragraph (d)(1)(iv)(C) of this section.

$n_2(et)$ = The function n_2 evaluated with ''edge target'' fuel parameters, which are defined in paragraph (d)(1)(iv)(C) of this section.

$n_1(b)$ = The function n_1 evaluated with the appropriate baseline fuel parameters defined in paragraph (b)(2) of this section.

$n_2(b)$ = The function n_2 evaluated with the appropriate baseline fuel parameters defined in paragraph (b)(2) of this section.

SUL_{et} = The value of SUL for the ''edge target'' fuel, as defined in paragraph (d)(1)(iv)(C) of this section.

ARO_{et} = The value of ARO for the ''edge target'' fuel, as defined in paragraph (d)(1)(iv)(C) of this section.

OLE_{et} = The value of OLE for the ''edge target'' fuel, as defined in paragraph (d)(1)(iv)(C) of this section.

(C) For both Phase I and Phase II, the ''edge target'' fuel is identical to the target fuel for all fuel parameters, with the following exceptions:

(*1*) If the sulfur level of the target fuel is less than 10 parts per million, then the value of SUL for the ''edge target'' fuel shall be set equal to 10 parts per million.

(*2*) If the sulfur level of the target fuel is greater than 450 parts per million, then the value of SUL for the ''edge target'' fuel shall be set equal to 450 parts per million.

(*3*) If the aromatics level of the target fuel is less than 18 volume percent, then the value of ARO for the ''edge target'' fuel shall be set equal to 18 volume percent.

(*4*) If the olefins level of the target fuel is greater than 19 volume percent, then the value of OLE for the ''edge target'' fuel shall be set equal to 19 volume percent.

(*5*) If the E300 level of the target fuel is greater than 95 volume percent, then the E300 value of the target fuel shall be set equal to 95 volume percent for the purposes of calculating NO_X emissions with the equations given in paragraph (d)(1)(iv)(B) of this section.

(*6*) If the sulfur level of the target fuel is less than 10 parts per million, then ΔSUL shall be set equal to (SUL − 10 parts per million).

(*7*) If the sulfur level of the target fuel is greater than 450 parts per million, then ΔSUL shall be set equal to (SUL − 450 parts per million).

(*8*) If the sulfur level of the target fuel is neither less than 10 parts per million nor greater than 450 parts per million, ΔSUL shall be set equal to zero.

(*9*) If the aromatics level of the target fuel is less than 18 volume percent and greater than 10 volume percent, then ΔARO shall be set equal to (ARO − 18 volume percent). If the aromatics level of the target fuel is less

than 10 volume percent, then ΔARO shall be set equal to −8 volume percent.

(*10*) If the aromatics level of the target fuel is greater than or equal to 18 volume percent, then ΔARO shall be set equal to zero.

(*11*) If the olefins level of the target fuel is greater than 19 volume percent, then ΔOLE shall be set equal to (OLE−19 volume percent).

(*12*) If the olefins level of the target fuel is less than or equal to 19 volume percent, then ΔOLE shall be set equal to zero.

(2) The winter NO_X emissions performance of gasolines shall be given by the equations presented in paragraph (d)(1) of this section with the RVP value set to 8.7 psi.

(3) The NO_X emissions performance of the target fuel in percentage terms from baseline levels shall be given by the following equations:

For Phase I:

Summer $NO_X\% = [100\% \times (NO_X - 0.660\ g/mi)]/(0.660\ g/mi)$

Winter $NO_X\% = [100\% \times (NO_X - 0.750\ g/mi)]/(0.750\ g/mi)$

For Phase II:

Summer $NO_X\% = [100\% \times (NO_X - 1.340\ g/mi)]/(1.340\ g/mi)$

Winter $NO_X\% = [100\% \times (NO_X - 1.540\ g/mi)]/(1.540\ g/mi)$

Summer $NO_X\%$ = Percentage change in NO_X emissions from summer baseline levels

Winter $NO_X\%$ = Percentage change in NO_X emissions from winter baseline levels

(e) *Toxics performance*—(1) *Summer toxics performance*. (i) Summer toxic emissions performance of gasolines in VOC Control Regions 1 and 2 shall be given by the following equations:

TOXICS1 = EXHBZ + FORM + ACET + BUTA + POM + NEBZ1

TOXICS2 = EXHBZ + FORM + ACET + BUTA + POM + NEBZ2

where

TOXICS1 = Summer toxics performance in VOC Control Region 1 in terms of milligrams per mile.

TOXICS2 = Summer toxics performance in VOC Control Region 2 in terms of milligrams per mile.

EXHBZ = Exhaust emissions of benzene in terms of milligrams per mile, as determined in paragraph (e)(4) of this section.

FORM = Emissions of formaldehyde in terms of milligrams per mile, as determined in paragraph (e)(5) of this section.

ACET = Emissions of acetaldehyde in terms of milligrams per mile, as determined in paragraph (e)(6) of this section.

BUTA = Emissions of 1,3-butadiene in terms of milligrams per mile, as determined in paragraph (e)(7) of this section.

POM = Polycyclic organic matter emissions in terms of milligrams per mile, as determined in paragraph (e)(8) of this section.

NEBZ1 = Nonexhaust emissions of benzene in VOC Control Region 1 in milligrams per mile, as determined in paragraph (e)(9) of this section.

NEBZ2 = Nonexhaust emissions of benzene in VOC Control Region 2 in milligrams per mile, as determined in paragraph (e)(10) of this section.

(ii) The percentage change in summer toxics performance in VOC Control Regions 1 and 2 shall be given by the following equations:

For Phase I:

TOXICS1% = [100% × (TOXICS1 −48.61 mg/mi)]/(48.61 mg/mi)

TOXICS2% = [100% × (TOXICS2 − 47.58 mg/mi)] / (47.58 mg/mi)

For Phase II:

TOXICS1% = [100% × (TOXICS1 − 86.34 mg/mi)] / (86.34 mg/mi)

TOXICS2% = [100% × (TOXICS2 − 85.61 mg/mi)]/(85.61 mg/mi)

where

TOXICS1% = Percentage change in summer toxics emissions in VOC Control Region 1 from baseline levels.

TOXICS2% = Percentage change in summer toxics emissions in VOC Control Region 2 from baseline levels.

(2) *Winter toxics performance*. (i) Winter toxic emissions performance of gasolines in VOC Control Regions 1 and 2 shall be given by the following equation, evaluated with the RVP set at 8.7 psi:

TOXICW = [EXHBZ + FORM + ACET + BUTA + POM]

where

TOXICW = Winter toxics performance in VOC Control Regions 1 and 2 in terms of milligrams per mile.

EXHBZ = Exhaust emissions of benzene in terms of milligrams per mile, as determined in paragraph (e)(4) of this section.

FORM = Emissions of formaldehyde in terms of milligrams per mile, as determined in paragraph (e)(5) of this section.
ACET = Emissions of acetaldehyde in terms of milligrams per mile, as determined in paragraph (e)(6) of this section.
BUTA = Emissions of 1,3-butadiene in terms of milligrams per mile, as determined in paragraph (e)(7) of this section.
POM = Polycyclic organic matter emissions in terms of milligrams per mile, as determined in paragraph (e)(8) of this section.

(ii) The percentage change in winter toxics performance in VOC Control Regions 1 and 2 shall be given by the following equation:

For Phase I:

$$TOXICW\% = [100\% \times (TOXICW - 58.36\ mg/mi)] / (58.36\ mg/mi)$$

For Phase II:

$$TOXICW\% = [100\% \times (TOXICW - 120.55\ mg/mi)] / (120.55\ mg/mi)$$

where

TOXICW% = Percentage change in winter toxics emissions in VOC Control Regions 1 and 2 from baseline levels.

(3) The year-round toxics performance in VOC Control Regions 1 and 2 shall be derived from volume-weighted performances of individual batches of fuel as described in § 80.67(g).

(4) Exhaust benzene emissions shall be given by the following equation, subject to paragragh (e)(4)(iii) of this section:

$$EXHBZ = BENZ(b) + (BENZ(b) \times Y_{BEN}(t)/100)$$

$$Y_{BEN}(t) = [(w_1 \times N_b) + (w_2 \times H_b) - 1] \times 100$$

where

EXHBZ = Exhaust benzene emissions in milligrams/mile
$Y_{BEN}(t)$ = Benzene performance of target fuel in terms of percentage change from baseline.
BENZ(b) = Baseline benzene emissions as defined in paragraph (b)(2) of this section for the appropriate phase and season.
$N_b = \exp b_1(t)/\exp b_1(b)$
$H_b = \exp b_2(t)/\exp b_2(b)$
w_1 = Weighting factor for normal emitters as defined in paragraph (b)(1) of this section for the appropriate Phase.
w_2 = Weighting factor for higher emitters as defined in paragraph (b)(1) of this section for the appropriate Phase.
$b_1(t)$ = Normal emitter benzene equation, as defined in paragraph (e)(4)(i) of this section, evaluated using the target fuel's properties subject to paragraph (e)(4)(iii) of this section.
$b_2(t)$ = Higher emitter benzene equation as defined in paragraph (e)(4)(ii) of this section, evaluated using the target fuel's properties subject to paragraph (e)(4)(iii) of this section.
$b_1(b)$ = Normal emitter benzene equation as defined in paragraph (e)(4)(i) of this section, evaluated for the base fuel's properties.
$b_2(b)$ = Higher emitter benzene equation, as defined in paragraph (e)(4)(ii) of this section, evaluated for the base fuel's properties.

(i) *Consolidated equation for normal emitters.*

$$b_1 = (0.0006197 \times SUL) + (-0.003376 \times E200) + (0.0265500 \times ARO) + (0.2223900 \times BEN)$$

(ii) *Equation for higher emitters.*

$$b_2 = (-0.096047 \times OXY) + (0.0003370 \times SUL) + (0.0112510 \times E300) + (0.0118820 \times ARO) + (0.2223180 \times BEN)$$

(iii) If the aromatics value of the target fuel is less than 10 volume percent, then an aromatics value of 10 volume percent shall be used when evaluating the equations given in paragraphs (e)(4)(i) and (ii) of this section. If the E300 value of the target fuel is greater than 95 volume percent, then an E300 value of 95 volume percent shall be used when evaluating the equations in paragraphs (e)(4)(i) and (ii) of this section.

(5) Formaldehyde mass emissions shall be given by the following equation, subject to paragraphs (e)(5) (iii) and (iv) of this section:

$$FORM = FORM(b) + (FORM(b) \times Y_{FORM}(t) / 100)$$

$$Y_{FORM}(t) = [(w_1 \times N_f) + (w_2 \times H_f) - 1] \times 100$$

where

FORM = Exhaust formaldehyde emissions in terms of milligrams/mile.
$Y_{FORM}(t)$ = Formaldehyde performance of target fuel in terms of percentage change from baseline.
FORM(b) = Baseline formaldehyde emissions as defined in paragraph (b)(2) of this section for the appropriate Phase and season.
$N_f = \exp f_1(t)/\exp f_1(b)$
$H_f = \exp f_2(t)/\exp f_2(b)$
w_1 = Weighting factor for normal emitters as defined in paragraph (b)(1) of this section for the appropriate Phase.

w_2 = Weighting factor for higher emitters as defined in paragraph (b)(1) of this section for the appropriate Phase.

$f_1(t)$ = Normal emitter formaldehyde equation as defined in paragraph (e)(5)(i) of this section, evaluated using the target fuel's properties subject to paragraphs (e)(5) (iii) and (iv) of this section.

$f_2(t)$ = Higher emitter formaldehyde equation as defined in paragraph (e)(5)(ii) of this section, evaluated using the target fuel's properties subject to paragraphs (e)(5) (iii) and (iv) of this section.

$f_1(b)$ = Normal emitter formaldehyde equation as defined in paragraph (e)(5)(i) of this section, evaluated for the base fuel's properties.

$f_2(b)$ = Higher emitter formaldehyde equation as defined in paragraph (e)(5)(ii) of this section, evaluated for the base fuel's properties.

(i) *Consolidated equation for normal emitters.*

$$f_1 = (-0.010226 \times E300) + (-0.007166 \times ARO) + (0.0462131 \times MTB)$$

(ii) *Equation for higher emitters.*

$$f_2 = (-0.010226 \times E300) + (-0.007166 \times ARO) + (-0.031352 \times OLE) + (0.0462131 \times MTB)$$

(iii) If the aromatics value of the target fuel is less than 10 volume percent, then an aromatics value of 10 volume percent shall be used when evaluating the equations given in paragraphs (e)(5) (i) and (ii) of this section. If the E300 value of the target fuel is greater than 95 volume percent, then an E300 value of 95 volume percent shall be used when evaluating the equations given in paragraphs (e)(5) (i) and (ii) of this section.

(iv) When calculating formaldehyde emissions and emissions performance, oxygen in the form of alcohols which are more complex or have higher molecular weights than ethanol shall be evaluated as if it were in the form of ethanol. Oxygen in the form of methyl ethers other than TAME and MTBE shall be evaluated as if it were in the form of MTBE. Oxygen in the form of ethyl ethers other than ETBE shall be evaluated as if it were in the form of ETBE. Oxygen in the form of non-methyl, non-ethyl ethers shall be evaluated as if it were in the form of ETBE. Oxygen in the form of methanol or non-alcohol, non-ether oxygenates shall not be evaluated with the Complex Model, but instead must be evaluated through vehicle testing per § 80.48.

(6) Acetaldehyde mass emissions shall be given by the following equation, subject to paragraphs (e)(6) (iii) and (iv) of this section:

$$ACET = ACET(b) + (ACET(b) \times Y_{ACET}(t)/100)$$

$$Y_{ACET}(t) = [(w_1 \times N_a) + (w_2 \times H_a) - 1] \times 100$$

where

ACET = Exhaust acetaldehyde emissions in terms of milligrams/mile

$Y_{ACET}(t)$ = Acetaldehyde performance of target fuel in terms of percentage change from baseline

ACET(b) = Baseline acetaldehyde emissions as defined in paragraph (b)(2) of this section for the appropriate phase and season

$N_a = \exp a_1(t)/\exp a_1(b)$

$H_a = \exp a_2(t)/\exp a_2(b)$

w_1 = Weighting factor for normal emitters as defined in paragraph (b)(1) of this section for the appropriate phase

w_2 = Weighting factor for higher emitters as defined in paragraph (b)(1) of this section for the appropriate phase

$a_1(t)$ = Normal emitter acetaldehyde equation as defined in paragraph (e)(6)(i) of this section, evaluated using the target fuel's properties, subject to paragraphs (e)(6) (iii) and (iv) of this section

$a_2(t)$ = Higher emitter acetaldehyde equation as defined in paragraph (e)(6)(ii) of this section, evaluated using the target fuel's properties, subject to paragraphs (e)(6) (iii) and (iv) of this section

$a_1(b)$ = Normal emitter acetaldehyde equation as defined in paragraph (e)(6)(i) of this section, evaluated for the base fuel's properties

$f_2(b)$ = Higher emitter acetaldehyde equation as defined in paragraph (e)(6)(ii) of this section, evaluated for the base fuel's properties

(i) *Consolidated equation for normal emitters.*

$$a_1 = (0.0002631 \times SUL) + (0.0397860 \times RVP) + (-0.012172 \times E300) + (-0.005525 \times ARO) + (-0.009594 \times MTB) + (0.3165800 \times ETB) + (0.2492500 \times ETH)$$

(ii) *Equation for higher emitters.*

$$a_2 = (0.0002627 \times SUL) + (-0.012157 \times E300) + (-0.005548 \times ARO) + (-0.055980 \times MTB) + (0.3164665 \times ETB) + (0.2493259 \times ETH)$$

(iii) If the aromatics value of the target fuel is less than 10 volume percent, then an aromatics value of 10 volume percent shall be used when evaluating the equations given in paragraphs (e)(6) (i) and (ii) of this section. If the E300

value of the target fuel is greater than 95 volume percent, then an E300 value of 95 volume percent shall be used when evaluating the equations given in paragraphs (e)(6) (i) and (ii) of this section.

(iv) When calculating acetaldehyde emissions and emissions performance, oxygen in the form of alcohols which are more complex or have higher molecular weights than ethanol shall be evaluated as if it were in the form of ethanol. Oxygen in the form of methyl ethers other than TAME and MTBE shall be evaluated as if it were in the form of MTBE. Oxygen in the form of ethyl ethers other than ETBE shall be evaluated as if it were in the form of ETBE. Oxygen in the form of non-methyl, non-ethyl ethers shall be evaluated as if it were in the form of ETBE. Oxygen in the form of methanol or non-alcohol, non-ether oxygenates shall not be evaluated with the Complex Model, but instead must be evaluated through vehicle testing per § 80.48.

(7) 1,3-butadiene mass emissions shall be given by the following equations, subject to paragraph (e)(7)(iii) of this section:

$$BUTA = BUTA(b) + (BUTA(b) \times Y_{BUTA}(t)/100)$$

$$Y_{BUTA}(t) = [(w_1 \times N_d) + (w_2 \times H_d) - 1] \times 100$$

where

BUTA = Exhaust 1,3-butadiene emissions in terms of milligrams/mile

$Y_{BUTA}(t)$ = 1,3-butadiene performance of target fuel in terms of percentage change from baseline

BUTA(b) = Baseline 1,3-butadiene emissions as defined in paragraph (b)(2) of this section for the appropriate phase and season

$N_d = \exp d_1(t)/\exp d_1(b)$

$H_d = \exp d_2(t)/\exp d_2(b)$

w_1 = eighting factor for normal emitters as defined in paragraph (b)(1) of this section for the appropriate phase

w_2 = Weighting factor for higher emitters as defined in paragraph (b)(1) of this section for the appropriate Phase.

$d_1(t)$ = Normal emitter 1,3-butadiene equation as defined in paragraph (e)(7)(i) of this section, evaluated using the target fuel's properties, subject to paragraph (e)(7)(iii) of this section.

$d_2(t)$ = Higher emitter 1,3-butadiene equation as defined in paragraph (e)(7)(ii) of this section, evaluated using the target fuel's properties, subject to paragraph (e)(7)(iii) of this section.

$d_1(b)$ = Normal emitter 1,3-butadiene equation as defined in paragraph (e)(7)(i) of this section, evaluated for the base fuel's properties.

$d_2(b)$ = Higher emitter 1,3-butadiene equation as defined in paragraph (e)(7)(ii) of this section, evaluated for the base fuel's properties.

(i) *Consolidated equation for normal emitters.*

$$d_1 = (0.0001552 \times SUL) + (-0.007253 \times E200) + (-0.014866 \times E300) + (-0.004005 \times ARO) + (0.0282350 \times OLE)$$

(ii) *Equation for higher emitters.*

$$d_2 = (-0.060771 \times OXY) + (-0.007311 \times E200) + (-0.008058 \times E300) + (-0.004005 \times ARO) + (0.0436960 \times OLE)$$

(iii) If the aromatics value of the target fuel is less than 10 volume percent, then an aromatics value of 10 volume percent shall be used when evaluating the equations given in paragraphs (e)(7) (i) and (ii) of this section. If the E300 value of the target fuel is greater than 95 volume percent, then an E300 value of 95 volume percent shall be used when evaluating the equations given in paragraphs (e)(7) (i) and (ii) of this section.

(8) Polycyclic organic matter mass emissions shall be given by the following equation:

$$POM = 0.003355 \times VOCE$$

POM = Polycyclic organic matter emissions in terms of milligrams per mile

VOCE = Non-methane, non-ethane exhaust emissions of volatile organic compounds in grams per mile.

(9) Nonexhaust benzene emissions in VOC Control Region 1 shall be given by the following equations for both Phase I and Phase II:

$$NEBZ1 = DIBZ1 + HSBZ1 + RLBZ1 + RFBZ1$$

$$HSBZ1 = 10 \times BEN \times VOCHS1 \times [(-0.0342 \times MTB) + (-0.080274 \times RVP) + 1.4448]$$

$$DIBZ1 = 10 \times BEN \times VOCD11 \times [(-0.0290 \times MTB) + (-0.080274 \times RVP) + 1.3758]$$

$$RLBZ1 = 10 \times BEN \times VOCRL1 \times [(-0.0342 \times MTB) + (-0.080274 \times RVP) + 1.4448]$$

$$RFBZ1 = 10 \times BEN \times VOCRF1 \times [(-0.0296 \times MTB) + (-0.081507 \times RVP) + 1.3972$$

where

NEBZ1 = Nonexhaust emissions of volatile organic compounds in VOC Control Region 1 in milligrams per mile.

DIBZ1 = Diurnal emissions of volatile organic compounds in VOC Control Region 1 in milligrams per mile.
HSBZ1 = Hot soak emissions of volatile organic compounds in VOC Control Region 1 in milligrams per mile.
RLBZ1 = Running loss emissions of volatile organic compounds in VOC Control Region 1 in milligrams per mile.
RFBZ1 = Refueling emissions of volatile organic compounds in VOC Control Region 1 in grams per mile.
VOCDI1 = Diurnal emissions of volatile organic compounds in VOC Control Region 1 in milligrams per mile, as determined in paragraph (c)(3) of this section.
VOCHS1 = Hot soak emissions of volatile organic compounds in VOC Control Region 1 in milligrams per mile, as determined in paragraph (c)(3) of this section.
VOCRL1 = Running loss emissions of volatile organic compounds in VOC Control Region 1 in milligrams per mile, as determined in paragraph (c)(3) of this section.
VOCRF1 = Refueling emissions of volatile organic compounds in VOC Control Region 1 in milligrams per mile, as determined in paragraph (c)(3) of this section.

(10) Nonexhaust benzene emissions in VOC Control Region 2 shall be given by the following equations for both Phase I and Phase II:

$$NEBZ2 = DIBZ2 + HSBZ2 + RLBZ2 + RFBZ2$$

$$HSBZ2 = 10 \times BEN \times VOCHS2 \times [(-0.0342 \times MTB) + (-0.080274 \times RVP) + 1.4448]$$

$$DIBZ2 = 10 \times BEN \times VOCD12 \times [(-0.0290 \times MTB) + (-0.080274 \times RVP) + 1.3758]$$

$$RLBZ2 = 10 \times BEN \times VOCRL2 \times [(-0.0342 \times MTB) + (-0.080274 \times RVP) + 1.4448]$$

$$RFBZ2 = 10 \times BEN \times VOCRF2 \times [(-0.0296 \times MTB) + (-0.081507 \times RVP) + 1.3972$$

where

NEBZ2 = Nonexhaust emissions of volatile organic compounds in VOC Control Region 2 in milligrams per mile.
DIBZ2 = Diurnal emissions of volatile organic compounds in VOC Control Region 2 in milligrams per mile.
HSBZ2 = Hot soak emissions of volatile organic compounds in VOC Control Region 2 in milligrams per mile.
RLBZ2 = Running loss emissions of volatile organic compounds in VOC Control Region 2 in milligrams per mile.
RFBZ2 = Refueling emissions of volatile organic compounds in VOC Control Region 2 in grams per mile.
VOCDI2 = Diurnal emissions of volatile organic compounds in VOC Control Region 2 in milligrams per mile, as determined in paragraph (c)(4) of this section.
VOCHS2 = Hot soak emissions of volatile organic compounds in VOC Control Region 2 in milligrams per mile, as determined in paragraph (c)(4) of this section.
VOCRL2 = Running loss emissions of volatile organic compounds in VOC Control Region 2 in milligrams per mile, as determined in paragraph (c)(4) of this section.
VOCRF2 = Refueling emissions of volatile organic compounds in VOC Control Region 2 in milligrams per mile, as determined in paragraph (c)(4) of this section.

(f) *Limits of the model*. (1) The equations described in paragraphs (c), (d), and (e) of this section shall be valid only for fuels with fuel properties that fall in the following ranges for reformulated gasolines and conventional gasolines:

(i) For reformulated gasolines:

Fuel property	Acceptable range
Oxygen	0.0–4.0 weight percent.
Sulfur	0.0–500.0 parts per million by weight.
RVP	6.4–10.0 pounds per square inch.
E200	30.0–70.0 percent evaporated.
E300	70.0–100.0 percent evaporated.
Aromatics	0.0–50.0 volume percent.
Olefins	0.0–25.0 volume percent.
Benzene	0.0–2.0 volume percent.

(ii) For conventional gasoline:

Fuel property	Acceptable range
Oxygen	0.00–4.0 weight percent.
Sulfur	0.0–1000.0 parts per million by weight.
RVP	6.4–11.0 pounds per square inch.
E200	30.0–70.0 evaporated percent.
E300	70.0–100.0 evaporated percent.
Aromatics	0.0–55.0 volume percent.
Olefins	0.0–30.0 volume percent.
Benzene	0.0–4.9 volume percent.

(2) Fuels with one or more properties that do not fall within the ranges described in above shall not be certified or evaluated for their emissions performance using the complex emissions model described in paragraphs (c), (d), and (e) of this section.

[59 FR 7813, Feb. 16, 1994, as amended at 59 FR 36959, July 20, 1994; 62 FR 68206, Dec. 31, 1997; 71 FR 74566, Dec. 15, 2005]

§ 80.46 Measurement of reformulated gasoline fuel parameters.

(a) *Sulfur*. Sulfur content of gasoline and butane must be determined by use of the following methods:

(1) The sulfur content of gasoline must be determined by use of American

Society for Testing and Materials (ASTM) standard method D2622 (incorporated by reference, see paragraph (h) of this section) or by one of the alternative methods specified in paragraph (a)(3) of this section.

(2) Beginning January 1, 2004, the sulfur content of butane must be determined by the use of ASTM standard test method D 6667–01, entitled, ''Standard Test Method for Determination of Total Volatile Sulfur in Gaseous Hydrocarbons and Liquefied Petroleum Gases by Ultraviolet Fluorescence'' or by the alternative method specified in paragraph (a)(4) of this section.

(3) Any refiner or importer may use any of the following methods for determining the sulfur content of gasoline; provided the refiner or importer test result is correlated with the method specified in paragraph (a)(1) of this section:

(i) ASTM standard method D5453 (incorporated by reference, see paragraph (h) of this section) or

(ii) ASTM standard method D6920 (incorporated by reference, see paragraph (h) of this section) or

(iii) ASTM standard method D3120 (incorporated by reference, see paragraph (h) of this section) or

(iv) ASTM standard method D7039 (incorporated by reference, see paragraph (h) of this section).

(4) Beginning January 1, 2004, any refiner or importer may determine the sulfur content of butane using any of the following methods; provided the refiner or importer test result is correlated with the method specified in paragraph (a)(2) of this section:

(i) ASTM standard method D 4468–85 (Reapproved 2000), ''Standard Test Method for Total Sulfur in Gaseous Fuels by Hydrogenolysis and Rateometric Colorimetry,'' or

(ii) ASTM standard method D 3246–96, entitled, ''Standard Test Method for Sulfur in Petroleum Gas by Oxidative Microcoulemetry.''

(b) *Olefins*. Olefin content must be determined by use of the following methods:

(1) Olefin content must be determined by use of ASTM standard method D1319 (incorporated by reference, see paragraph (h) of this section).

(2)(i)–(ii) [Reserved]

(c) *Reid vapor pressure (RVP)*. Reid vapor pressure must be determined using ASTM standard test method ASTM D5191 (incorporated by reference, see paragraph (h) of this section), except that the following correlation equation must be used:

RVP psi = (0.956 * X) − 0.347

RVP kPa = (0.956 * X) − 2.39

(d) *Distillation*. Distillation parameters must be determined using ASTM standard test method D86 (incorporated by reference, see paragraph (h) of this section).

(e) *Benzene*. (1) Benzene content must be determined using ASTM standard test method ASTM D3606–07 (incorporated by reference, see paragraph (h) of this section), except that.

(2) Instrument parameters shall be adjusted to ensure complete resolution of the benzene, ethanol and methanol peaks because ethanol and methanol may cause interference with ASTM standard method D–3606–99 when present.

(f)(1) Aromatic content must be determined using ASTM D5769 (incorporated by reference, see paragraph (h) of this section), except that the sample chilling requirements in section 8 of this standard method are optional.

(2) [Reserved]

(3)(i) Any refiner or importer may determine aromatics content using ASTM standard method D1319 (incorporated by reference, see paragraph (h) of this section) for purposes of meeting any testing requirement involving aromatics content; provided that

(ii) The refiner or importer test result is correlated with the method specified in paragraph (f)(1) of this section.

(g) *Oxygen and oxygenate content analysis*. (1) Oxygen and oxygenate content must be determined using ASTM standard method D5599 (incorporated by reference, see paragraph (h) of this section).

(2)(i) When oxygenates present are limited to MTBE, ETBE, TAME, DIPE, tertiary-amyl alcohol and C_1 to C_4 alcohols, any refiner, importer, or oxygenate blender may determine oxygen and oxygen content using ASTM standard

method D4815 (incorporated by reference, see paragraph (h) of this section) for purposes of meeting any testing requirement; provided that:

(ii) The refiner or importer test result is correlated with the method specified in paragraph (g)(1) of this section.

(h) *Materials incorporated by reference.* The Director of the Federal Register approved the incorporation by reference of the documents listed in this section as prescribed in 5 U.S.C. 552(a) and 1 CFR 51. Anyone may inspect copies at the U.S. EPA, Air and Radiation Docket and Information Center, 1301 Constitution Ave., NW., Room B102, EPA West Building, Washington, DC, 20460, under EPA docket ID Number EPA–HQ–OAR–2008–0558, or at the National Archives and Records Administration (NARA). The telephone number for the Air Docket Public Reading Room is (202) 566–1742. For information on the availability of this material at NARA, call 202–741–6030 or go to: *http://www.archives.gov/federal_register/code_of_federal_regulations/ibr_locations.html.* For further information on these test methods, please contact the Environmental Protection Agency at 734–214–4582.

(1) *ASTM material.* Anyone may purchase copies of these materials from the American Society for Testing and Materials (ASTM), 100 Barr Harbor Dr., West Conshohocken, PA 19428–2959, or by contacting ASTM customer service at 610–832–9585, or by contacting the email address of *service@astm.org* from the ASTM Web site of *http://www.astm.org*.

(i) ASTM standard method D3606–07 (''ASTM D3606''), Standard Test Method for Determination of Benzene and Toluene in Finished Motor and Aviation Gasoline by Gas Chromatography, approved November 1, 2007.

(ii) ASTM standard method D1319–03 $^{\varepsilon 1}$ (''ASTM D1319''), Standard Test Method for Hydrocarbon Types in Liquid Petroleum Products by Fluorescent Indicator Adsorption, approved November 1, 2003.

(iii) [Reserved]

(iv) ASTM standard method D4815–04 (''ASTM D4815''), Standard Test Method for Determination of MTBE, ETBE, TAME, DIPE, tertiary-Amyl Alcohol and C_1 to C_4 Alcohols in Gasoline by Gas Chromatography, approved November 1, 2004.

(v) ASTM standard method D2622–05 (''ASTM D2622''), Standard Test Method for Sulfur in Petroleum Products by Wavelength Dispersive X-Ray Fluorescence Spectrometry, approved November 1, 2005.

(vi) ASTM standard method D3246–96 (''ASTM D3246''), Standard Test Method for Sulfur in Petroleum Gas by Oxidative Microcoulometry.

(vii) ASTM standard method D5191–07 (''ASTM D5191''), Standard Test Method for Vapor Pressure of Petroleum Products (Mini Method), approved May 1, 2007.

(viii) ASTM standard method D5599–00(2005) (''ASTM D5599''), Standard Test Method for Determination of Oxygenates in Gasoline by Gas Chromatography and Oxygen Selective Flame Ionization Detection, approved November 1, 2005.

(ix) ASTM standard method D5769–04 (''ASTM D5769''), Standard Test Method for Determination of Benzene, Toluene, and Total Aromatics in Finished Gasolines by Gas Chromatography/Mass Spectrometry, approved May 1, 2004.

(x) ASTM standard method D86–07b (''ASTM D86''), Standard Test Method for Distillation of Petroleum Products at Atmospheric Pressure, approved November 15, 2007.

(xi) ASTM standard method D5453–08a (''ASTM D5453''), Standard Test Method for Determination of Total Sulfur in Light Hydrocarbons, Spark Ignition Engine Fuel, Diesel Engine Fuel, and Engine Oil by Ultraviolet Fluorescence, approved February 1, 2008.

(xii) ASTM standard method D6920–07 (''ASTM D6920''), Standard Test Method for Total Sulfur in Naphthas, Distillates, Reformulated Gasolines, Diesels, Biodiesels, and Motor Fuels by Oxidative Combustion and Electrochemical Detection, approved December 1, 2007.

(xiii) ASTM standard method D3120–06$^{\varepsilon 1}$ (''ASTM D3120''), Standard Test Method for Trace Quantities of Sulfur in Light Petroleum Hydrocarbons by Oxidative Microcoulometry, approved December 1, 2006.

(xiv) ASTM standard method D7039–07 (''ASTM D7039''), Standard Test Method for Sulfur in Gasoline and Diesel Fuel by Monochromatic Wavelength Dispersive X-ray Fluorescence Spectrometry, approved May 1, 2007.

(xv) ASTM standard method D6667–01 (''ASTM D6667''), Standard Test Method for Determination of Total Volatile Sulfur in Gaseous Hydrocarbons and Liquefied Petroleum Gases by Ultraviolet Fluorescence.

(xvi) ASTM standard method D4468–85 (reapproved 2000) (''ASTM D4468''), Standard Test Method for Total Sulfur in Gaseous Fuels by Hydrogenolysis and Rateometric Colorimetry.

(2) [Reserved]

[59 FR 7813, Feb. 16, 1994, as amended at 59 FR 36961, July 20, 1994; 61 FR 58306, Nov. 13, 1996; 63 FR 63793, Nov. 17, 1998; 65 FR 6822, Feb. 10, 2000; 65 FR 53189, Sept. 1, 2000; 66 FR 17263, Mar. 29, 2001; 67 FR 8737, Feb. 26, 2002; 67 FR 40181, June 12, 2002; 68 FR 56781, Oct. 2, 2003; 68 FR 57819, Oct. 7, 2003; 71 FR 16499, Apr. 3, 2006; 73 FR 74355, Dec. 8, 2008; 74 FR 6233, Feb. 6, 2009]

§ 80.47 [Reserved]

§ 80.48 Augmentation of the complex emission model by vehicle testing.

(a) The provisions of this section apply only if a fuel claims emission reduction benefits from fuel parameters that are not included in the complex emission model or complex emission model database, or if the values of fuel parameters included in the complex emission model set forth in § 80.45 fall outside the range of values for which the complex emission model is deemed valid.

(b) To augment the complex emission model described at § 80.45, the following requirements apply:

(1) The petitioner must obtain prior approval from the Administrator for the design of the test program before beginning the vehicle testing process. To obtain approval, the petitioner must at minimum provide the following information: the fuel parameter to be evaluated for emission effects; the number and description of vehicles to be used in the test fleet, including model year, model name, vehicle identification number (VIN), mileage, emission performance (exhaust THC emission level), technology type, and manufacturer; a description of the methods used to procure and prepare the vehicles; the properties of the fuels to be used in the testing program (as specified at § 80.49); the pollutants and emission categories intended to be evaluated; the precautions used to ensure that the effects of the parameter in question are independent of the effects of other parameters already included in the model; a description of the quality assurance procedures to be used during the test program; the statistical analysis techniques to be used in analyzing the test data, and the identity and location of the organization performing the testing.

(2) Exhaust emissions shall be measured per the requirements of this section and § 80.49 through § 80.62.

(3) The nonexhaust emission model (including evaporative, running loss, and refueling VOC and toxics emissions) shall not be augmented by vehicle testing.

(4) The Agency reserves the right to observe and monitor any testing that is performed pursuant to the requirements of this section.

(5) The Agency reserves the right to evaluate the quality and suitability of data submitted pursuant to the requirements of this section and to reject, re-analyze, or otherwise evaluate such data as is technically warranted.

(6) Upon a showing satisfactory to the Administrator, the Administrator may approve a petition to waive the requirements of this section and § 80.49, § 80.50(a), § 80.60(d)(3), and § 80.60(d)(4) in order to better optimize the test program to the needs of the particular fuel parameter. Any such waiver petition should provide information justifying the requested waiver, including an acceptable rationale and supporting data. Petitioners must obtain approval from the Administrator prior to conducting testing for which the requirements in question are waived. The Administrator may waive the noted requirements in whole or in part, and may impose appropriate conditions on any such waiver.

(c) In the case of petitions to augment the complex model defined at § 80.45 with a new parameter, the effect of the parameter being tested shall be

determined separately, for each pollutant and for each emitter class category. If the parameter is not included in the complex model but is represented in whole or in part by one or more parameters included in the model, the petitioner shall be required to demonstrate the emission effects of the parameter in question independent of the effects of the already-included parameters. The petitioner shall also have to demonstrate the effects of the already-included parameters independent of the effects of the parameter in question. The emission performance of each vehicle on the fuels specified at § 80.49, as measured through vehicle testing in accordance with § 80.50 through § 80.62, shall be analyzed to determine the effects of the fuel parameter being tested on emissions according to the following procedure:

(1) The analysis shall fit a regression model to the natural logarithm of emissions measured from addition fuels 1, 2, and 3 only (as specified at § 80.49(a) and adjusted as per paragraph (c)(1)(iv) of this section and § 80.49(d)) that includes the following terms:

(i) A term for each vehicle that shall reflect the effect of the vehicle on emissions independent of fuel compositions. These terms shall be of the form $D_i \times V_i$, where D_i is the coefficient for the term and V_i is a dummy variable which shall have the value 1.0 for the ith vehicle and the value 0 for all other vehicles.

(ii) A linear term in the parameter being tested for each emitter class, of the form $A_i \times (P_1 - P_1\ (avg)) \times E_i$, where A_i is the coefficient for the term, P_1 is the level of the parameter in question, P_1 (avg) is the average level of the parameter in question for all seven test fuels specified at § 80.49(a)(1), and E_i is a dummy variable representing emitter class, as defined at § 80.62. For normal emitters, $E_1 = 1$ and $E_2 = 0$. For higher emitters, $E_1 = 0$ and $E_2 = 1$.

(iii) For the VOC and NO_X models, a squared term in the parameter being tested for each emitter class, of the form $B_i \times (P_1 - P_1\ (avg))^2 \times E_i$, where B_i is the coefficient for the term and where P_1 , P_1 (avg), and E_i are as defined in paragraph (c)(1)(ii) of this section.

(iv) To the extent that the properties of fuels 1, 2, and 3 which are incorporated in the complex model differ in value among the three fuels, the complex model shall be used to adjust the observed emissions from test vehicles on those fuels to compensate for those differences prior to fitting the regression model.

(v) The A_i and B_i terms and coefficients developed by the regression described in this paragraph (c) shall be evaluated against the statistical criteria defined in paragraph (e) of this section. If both terms satisfy these criteria, then both terms shall be retained. If the B_i term satisfies these criteria and the A_i term does not, then both terms shall be retained. If the B_i term does not satisfy these criteria, then the B_i term shall be dropped from the regression model and the model shall be re-estimated. If, after dropping the B_i term and re-estimating the model, the A_i term does not satisfy these criteria, then both terms shall be dropped, all test data shall be reported to EPA, and the augmentation request shall be denied.

(2) After completing the steps outlined in paragraph (c)(1) of this section, the analysis shall fit a regression model to a combined data set that includes vehicle testing results from all seven addition fuels specified at § 80.49(a), the vehicle testing results used to develop the model specified at § 80.45, and vehicle testing results used to support any prior augmentation requests which the Administrator deems necessary.

(i) The analysis shall fit the regression models described in paragraphs (c)(2) (ii) through (v) of this section to the natural logarithm of measured emissions.

(ii) All regressions shall include a term for each vehicle that shall reflect the effect of the vehicle on emissions independent of fuel compositions. These terms shall be of the form $D_i \times V_i$, where D_i is the coefficient for the term and V_i is a dummy variable which shall have the value 1.0 for the ith vehicle and the value 0 for all other vehicles. Vehicles shall be represented by separate terms for each test program in which they were tested. The vehicle terms for the vehicles included in the test program undertaken by the petitioner shall be calculated based on the

results from all seven fuels specified at § 80.49(a). Note that the D_i estimates for the petitioner's test vehicles in this regression are likely to differ from the D_i estimates discussed in paragraph (c)(1)(i) of this section since they will be based on a different set of fuels.

(iii) All regressions shall include existing complex model terms and their coefficients, including those augmentations that the Administrator deems necessary. All terms and coefficients shall be expressed in centered form. The Administrator shall make available upon request existing complex model terms and coefficients in centered form.

(iv) All regressions shall include the linear and squared terms, and their coefficients, estimated in the final regression model described in paragraph (c)(1) of this section.

(v) The VOC and NO_X regressions shall include those interactive terms with other fuel parameters, of the form $C_{i(1,j)} \times (P_1 - P_1 \quad (avg)) \times (P_j - P_j \quad (avg)) \times E_i$, where $C_{i(1,j)}$ is the coefficient for the term, P_1 is the level of the parameter being added to the model, P_1 (avg) is the average level of the parameter being added for all seven addition fuels specified at § 80.49(a), P_j is the level of the other fuel parameter, P_j (avg) is the centering value for the other fuel parameter used to develop the complex model or used in the other parameter's augmentation study, and E_i is as defined in paragraph (c)(1) of this section, which are found to satisfy the statistical criteria defined in paragraph (e) of this section. Such terms shall be added to the regression model in a stepwise manner.

(3) The model described in paragraphs (c) (1) and (2) of this section shall be developed separately for normal-emitting and higher-emitting vehicles. Each emitter class shall be treated as a distinct population for the purposes of determining regression coefficients.

(4) Once the augmented models described in paragraphs (c) (1) through (3) of this section have been developed, they shall be converted to an uncentered form through appropriate algebraic manipulation.

(5) The augmented model described in paragraph (c)(4) of this section shall be used to determine the effects of the parameter in question at levels between the levels in Fuels 1 and 3, as defined at § 80.49(a)(1), for all fuels which claim emission benefits from the parameter in question.

(d)(1) In the case of petitions to augment the complex model defined at § 80.45 by extending the range of an existing complex model parameter, the effect of the parameter being tested shall be determined separately, for each pollutant and for each technology group and emitter class category, at levels between the extension level and the nearest limit of the core of the data used to develop the unaugmented complex model as follows:

Fuel parameter	Data core limits	
	Lower	Upper
Sulfur, ppm	10	450
RVP, psi	7	10
E200, vol %	33	66
E300, vol %	72	94
Aromatics, vol %	18	46
Benzene, vol %	0.4	1.8
Olefins, vol %	1	19
Oxygen, wt %.		
As ethanol	0	3.4
All others:	0	2.7

(2) The emission performance of each vehicle on the fuels specified at § 80.49(b)(2), as measured through vehicle testing in accordance with §§ 80.50 through 80.62, shall be analyzed to determine the effects of the fuel parameter being tested on emissions according to the following procedure:

(i) The analysis shall incorporate the vehicle testing data from the extension fuels specified at § 80.49(b), the vehicle testing results used to develop the model specified at § 80.45, and vehicle testing results used to support any prior augmentation requests which the Administrator deems necessary. A regression incorporating the following terms shall be fitted to the natural logarithm of emissions contained in this combined data set:

(A) A term for each vehicle that shall reflect the effect of the vehicle on emissions independent of fuel compositions. These terms shall be of the form $D_i \times V_i$, where D_i is the coefficient for the term and V_i is a dummy variable which shall have the value 1.0 for the ith vehicle and the value 0 for all other vehicles. Vehicles shall be represented

by separate terms for each test program in which they were tested. The vehicle terms for the vehicles included in the test program undertaken by the petitioner shall be calculated based on the results from all three fuels specified at § 80.49(b)(2).

(B) Existing complex model terms that do not include the parameter being extended and their coefficients, including those augmentations that the Administrator deems necessary. The centering values for these terms shall be identical to the centering values used to develop the complex model described at § 80.45.

(C) Existing complex model terms that include the parameter being extended. The coefficients for these terms shall be estimated by the regression. The centering values for these terms shall be identical to the centering values used to develop the complex model described at § 80.45.

(D) If the unaugmented VOC or NO_X complex models do not contain a squared term for the parameter being extended, such a term should be added in a stepwise fashion after completing the model described in paragraphs (d)(2)(i)(A) through (C) of this section. The coefficient for this term shall be estimated by the regression. The centering value for this term shall be identical to the centering value used to develop the complex model described at § 80.45.

(E) The terms defined in paragraphs (d)(2)(i)(C) and (D) of this section shall be evaluated against the statistical criteria defined in paragraph (e) of this section.

(ii) The model described in paragraph (d)(2)(i) of this section shall be developed separately for normal-emitting and higher-emitting vehicles, as defined at § 80.62. Each emitter class shall be treated as a distinct population for the purposes of determining regression coefficients.

(e) *Statistical criteria.* (1) The petitioner shall be required to submit evidence with the petition which demonstrates the statistical validity of the regression described in paragraph (c) or (d) of this section, including at minimum:

(i) Evidence demonstrating that colinearity problems are not severe, including but not limited to variance inflation statistics of less than 10 for the second-order and interactive terms included in the regression model.

(ii) Evidence demonstrating that the regression residuals are normally distributed, including but not limited to the skewness and Kurtosis statistics for the residuals.

(iii) Evidence demonstrating that overfitting and underfitting risks have been balanced, including but not limited to the use of Mallow's C_p criterion.

(2) The petitioner shall be required to submit evidence with the petition which demonstrates that the appropriate terms have been included in the regression, including at minimum:

(i) Descriptions of the analysis methods used to develop the regressions, including any computer code used to analyze emissions data and the results of regression runs used to develop the proposed augmentation, including intermediate regressions produced during the stepwise regression process.

(ii) Evidence demonstrating that the significance level used to include terms in the model was equal to 0.90.

(f) The complex emission model shall be augmented with the results of vehicle testing as follows:

(1) The terms and coefficients determined in paragraph (c) or (d) of this section shall be used to supplement the complex emission model equation for the corresponding pollutant and emitter category. These terms and coefficients shall be weighted to reflect the contribution of the emitter category to in-use emissions as shown at § 80.45.

(2) If the candidate parameter is not included in the unaugmented complex model and is not represented in whole or in part by one or more parameters included in the model, the modification shall be accomplished by adding the terms and coefficients to the complex model equation for that pollutant, technology group, and emitter category.

(3) If the parameter is included in the complex model but is being tested at levels beyond the current range of the model, the terms and coefficients determined in paragraph (d) of this section shall be used to supplement the complex emission model equation for the corresponding pollutant.

(i) The terms and coefficients of the complex model described at § 80.45 shall be used to evaluate the emissions performance of fuels with levels of the parameter being tested that are within the valid range of the model, as defined at § 80.45.

(ii) The emissions performance of fuels with levels of the parameter that are beyond the valid range of the unaugmented model shall be given in percentage change terms by $100 - [(100 + A) \times (100 + C) / (100 + B)]$, where:

(A) ''A'' shall be set equal to the percentage change in emissions for a fuel with identical fuel property values to the fuel being evaluated except for the parameter being extended, which shall be set equal to the nearest limit of the data core, using the unaugmented complex model.

(B) ''B'' shall be set equal to the percentage change in emissions for the fuel described in paragraph (f)(3)(i) of this section according to the augmented complex model.

(C) ''C'' shall be set equal to the percentage change in emissions of the actual fuel being evaluated using the augmented complex model.

(g) EPA reserves the right to analyze the data generated during vehicle testing, to use such analyses to determine the validity of other augmentation petitions, and to use such data to update the complex model for use in certifying all reformulated gasolines.

(h) Duration of acceptance of emission effects determined through vehicle testing:

(1) If the Agency does not accept, modify, or reject a particular augmentation for inclusion in an updated complex model (performed through rulemaking), then the augmentation shall remain in effect until the next update to the complex model takes effect.

(2) If the Agency does reject or modify a particular augmentation for inclusion in an updated complex model, then the augmentation shall no longer be able to be used as of the date the updated complex model is deemed to take effect, unless the following conditions and limitations apply:

(i) The augmentation in question may continue to be used by those fuel suppliers which can prove, to the Administrator's satisfaction, that the fuel supplier had already begun producing a fuel utilizing the augmentation at the time the revised model is promulgated.

(ii) The augmentation in question may only be used to evaluate the emissions performance of fuels in conjunction with the complex emission model in effect as of the date of production of the fuels.

(iii) The augmentation may only be used for three years of fuel production, or a total of five years from the date the augmentation first took effect, whichever is shorter.

(3) The Administrator shall determine when sufficient new information on the effects of fuel properties on vehicle emissions has been obtained to warrant development of an updated complex model.

[59 FR 7813, Feb. 16, 1994, as amended at 59 FR 36962, July 20, 1994]

§ 80.49 Fuels to be used in augmenting the complex emission model through vehicle testing.

(a) Seven fuels (hereinafter called the ''addition fuels'') shall be tested for the purpose of augmenting the complex emission model with a parameter not currently included in the complex emission model. The properties of the addition fuels are specified in paragraphs (a)(1) and (2) of this section. The addition fuels shall be specified with at least the same level of detail and precision as in paragraph (a)(5)(i) of this section, and this information must be included in the petition submitted to the Administrator requesting augmentation of the complex emission model.

(1) The seven addition fuels to be tested when augmenting the complex model specified at § 80.45 with a new fuel parameter shall have the properties specified as follows:

PROPERTIES OF FUELS TO BE TESTED WHEN AUGMENTING THE MODEL WITH A NEW FUEL PARAMETER

Fuel property	Fuels						
	1	2	3	4	5	6	7
Sulfur, ppm	150	150	150	35	35	500	500
Benzene, vol %	1.0	1.0	1.0	0.5	0.5	1.3	1.3
RVP, psi	7.5	7.5	7.5	6.5	6.5	8.1	8.1
E200, %	50	50	50	62	62	37	37
E300, %	85	85	85	92	92	79	79
Aromatics, vol %	27	27	27	20	20	45	45
Olefins, vol %	9.0	9.0	9.0	2.0	2.0	18	18
Oxygen, wt %	2.1	2.1	2.1	2.7	2.7	1.5	1.5
Octane, (R+M)/2	87	87	87	87	87	87	87
New Parameter [1]	C	(C+B)/2	B	C	B	C	B

[1] C = Candidate level, B = Baseline level.

(i) For the purposes of vehicle testing, the ''baseline'' level of the parameter shall refer to the level of the parameter in Clean Air Act baseline gasoline. The ''candidate'' level of the parameter shall refer to the most extreme value of the parameter, relative to baseline levels, for which the augmentation shall be valid.

(ii) If the fuel parameter for which the fuel supplier is petitioning EPA to augment the complex emission model (hereinafter defined as the ''candidate parameter'') is not specified for Clean Air Act summer baseline fuel, then the baseline level for the candidate parameter shall be set at the levels found in typical gasoline. This level and the justification for this level shall be included in the petitioner's submittal to EPA prior to initiating the test program, and EPA must approve this level prior to the start of the program.

(iii) If the candidate parameter is not specified for Clean Air Act summer baseline fuel, and is not present in typical gasoline, its baseline level shall be zero.

(2) The addition fuels shall contain detergent control additives in accordance with section 211(l) of the Clean Air Act Amendments of 1990 and the associated EPA requirements for such additives.

(3) The addition fuels shall be specified with at least the same level of detail and precision as in paragraph (a)(5)(i) of this section, and this information shall be included in the petition submitted to the Administrator requesting augmentation of the complex emission model.

(i) Paraffin levels in Fuels 1 and 2 shall be altered from the paraffin level in Fuel 3 to compensate for the addition or removal of the candidate parameter, if necessary. Paraffin levels in Fuel 4 shall be altered from the paraffin level in Fuel 5 to compensate for the addition or removal of the candidate parameter, if necessary. Paraffin levels in Fuel 6 shall be altered from the paraffin level in Fuel 7 to compensate for the addition or removal of the candidate parameter, if necessary.

(ii) Other properties of Fuels 4 and 6 shall not vary from the levels for Fuels 5 and 7, respectively, unless such variations are the naturally-occurring result of the changes described in paragraphs (a)(1) and (2) of this section. Other properties of Fuels 1 and 2 shall not vary from the levels for Fuel 3, unless such variations are the naturally-occurring result of the changes described in paragraphs (a)(1) and (2) of this section.

(iii) The addition fuels shall be specified with at least the same level of detail and precision as defined in paragraph (a)(5)(i) of this section, and this information must be included in the petition submitted to the Administrator requesting augmentation of the complex emission model.

(4) The properties of the addition fuels shall be within the blending tolerances defined in this paragraph (a)(4) relative to the values specified in paragraphs (a)(1) and (2) of this section. Fuels that do not meet these tolerances shall require the approval of the Administrator to be used in vehicle

testing to augment the complex emission model:

Fuel parameter	Blending tolerance
Sulfur content	±25 ppm.
Benzene content	±0.2 vol %.
RVP	±0.2 psi.
E200 level	±2 %.
E300 level	±4 %.
Oxygenate content	±1.0 vol %.
Aromatics content	±2.7 vol %.
Olefins content	±2.5 vol %.
Saturates content	±2.0 vol %.
Octane	±0.5.
Detergent control additives	±10% of the level required by EPA's detergents rule.
Candidate parameter	To be determined as part of the augmentation process.

(5) The composition and properties of the addition fuels shall be determined by averaging a series of independent tests of the properties and compositional factors defined in paragraph (a)(5)(i) of this section as well as any additional properties or compositional factors for which emission benefits are claimed.

(i) The number of independent tests to be conducted shall be sufficiently large to reduce the measurement uncertainty for each parameter to a sufficiently small value. At a minimum the 95% confidence limits (as calculated using a standard t-test) for each parameter must be within the following range of the mean measured value of each parameter:

Fuel parameter	Measurement uncertainty
API gravity	±0.2°API
Sulfur content	±10 ppm
Benzene content	±0.02 vol %
RVP	±0.05 psi
Octane	±0.2 (R+M/2)
E200 level	±2%
E300 level	±2%
Oxygenate content	±0.2 vol %
Aromatics content	±0.5 vol %
Olefins content	±0.3 vol %
Saturates content	±1.0 vol %
Detergent control Additives.	±2% of the level required by EPA's detergents rule.

(ii) The 95% confidence limits for measurements of fuel parameters for which emission reduction benefits are claimed and for which tolerances are not defined in paragraph (a)(5)(i) of this section must be within ±5% of the mean measured value.

(iii) Each test must be conducted in the same laboratory in accordance with the procedures outlined at § 80.46.

(b) Three fuels (hereinafter called ''extention fuels'') shall be tested for purpose of extending the valid range of the complex emission model for a parameter currently included in the complex emission model. The properties of the extension fuels are specified in paragraphs (b)(2) through (4) of this section. The extension fuels shall be specified with at least the same level of detail and precision as in paragraph (a)(5)(i) of this section, and this information must be included in the petition submitted to the Administrator requesting augmentation of the complex emission model. Each set of three extension fuels shall be used only to extend the range of a single complex model parameter.

(1) The ''extension level'' shall refer to the level to which the parameter being tested is to be extended. The three fuels to be tested when extending the range of fuel parameters already included in the complex model or a prior augmentation to the complex model shall be referred to as ''extension fuels.''

(2) The composition and properties of the extension fuels shall be as described in paragraphs (b)(2) (i) and (ii) of this section.

(i) The extension fuels shall have the following levels of the parameter being extended:

LEVEL OF EXISTING COMPLEX MODEL PARAMETERS BEING EXTENDED

Fuel property being extended	Extension fuel No. 1	Extension fuel No. 2	Extension fuel No. 3
Sulfur, ppm	Extension level	80	450
Benzene, vol %	Extension level	0.5	1.5
RVP, psi	Extension level	6.7	8.0
E200, %	Extension level	38	61
E300, %	Extension level	78	92
Aromatics, vol %	Extension level	20	45
Olefins, vol %	Extension level	3.0	18
Oxygen, wt %	Extension level	1.7	2.7
Octane, R+M/2	87	87	87

(ii) The levels of parameters other than the one being extended shall be given by the following table for all three extension fuels:

LEVELS FOR FUEL PARAMETERS OTHER THAN THOSE BEING EXTENDED

Fuel property	Extension fuel No. 1	Extension fuel No. 2	Extension fuel No. 3
Sulfur, ppm	150	150	150

LEVELS FOR FUEL PARAMETERS OTHER THAN THOSE BEING EXTENDED—Continued

Fuel property	Extension fuel No. 1	Extension fuel No. 2	Extension fuel No. 3
Benzene, vol %	1.0	1.0	1.0
RVP, psi	7.5	7.5	7.5
E200, %	50	50	50
E300, %	85	85	85
Aromatics, vol %	25	25	25
Olefins, vol %	9.0	9.0	9.0
Oxygen, wt %	2.0	2.0	2.0
Octane, R+M/2	87	87	87

(3) If the Complex Model for any pollutant includes one or more interactive terms involving the parameter being extended, then two additional extension fuels shall be required to be tested for each such interactive term. These additional extension fuels shall have the following properties:

(i) The parameter being tested shall be present at its extension level.

(ii) The interacting parameter shall be present at the levels specified in paragraph (b)(2)(i) of this section for extension Fuels 2 and 3.

(iii) All other parameters shall be present at the levels specified in paragraph (b)(2)(ii) of this section.

(4) All extension fuels shall contain detergent control additives in accordance with Section 211(l) of the Clean Air Act Amendments of 1990 and the associated EPA requirements for such additives.

(c) The addition fuels defined in paragraph (a) of this section and the extension fuels defined in paragraph (b) of this section shall meet the following requirements for blending and measurement precision:

(1) The properties of the test and extension fuels shall be within the blending tolerances defined in this paragraph (c) relative to the values specified in paragraphs (a) and (b) of this section. Fuels that do not meet the following tolerances shall require the approval of the Administrator to be used in vehicle testing to augment the complex emission model:

Fuel parameter	Blending tolerance
Sulfur content	±25 ppm.
Benzene content	±0.2 vol %.
RVP	±0.2 psi.
E200 level	±2 %.
E300 level	±4 %.
Oxygenate content	±1.5 vol %.
Aromatics content	±2.7 vol %.
Olefins content	±2.5 vol %.
Saturates content	±2.0 vol %.
Octane	±0.5.
Candidate parameter	To be determined as part of the augmentation process.

(2) The extension and addition fuels shall be specified with at least the same level of detail and precision as defined in paragraph (c)(2)(ii) of this section, and this information must be included in the petition submitted to the Administrator requesting augmentation of the complex emission model.

(i) The composition and properties of the addition and extension fuels shall be determined by averaging a series of independent tests of the properties and compositional factors defined in paragraph (c)(2)(ii) of this section as well as any additional properties or compositional factors for which emission benefits are claimed.

(ii) The number of independent tests to be conducted shall be sufficiently large to reduce the measurement uncertainty for each parameter to a sufficiently small value. At a minimum the 95% confidence limits (as calculated using a standard t-test) for each parameter must be within the following range of the mean measured value of each parameter:

Fuel parameter	Measurement uncertainty
API gravity	±0.2 °API.
Sulfur content	±5 ppm.
Benzene content	±0.05 vol %.
RVP	±0.08 psi.
Octane	±0.1 (R+M/2).
E200 level	±2 %.
E300 level	±2 %.
Oxygenate content	±0.2 vol %.
Aromatics content	±0.5 vol %.
Olefins content	±0.3 vol %.
Saturates content	±1.0 vol.%
Octane	±0.2.
Candidate parameter	To be determined as part of the augmentation process.

(iii) Petitioners shall obtain approval from EPA for the 95% confidence limits for measurements of fuel parameters for which emission reduction benefits are claimed and for which tolerances are not defined in paragraph (c)(2)(i) of this section.

(iv) Each test must be conducted in the same laboratory in accordance with the procedures outlined at § 80.46.

(v) The complex emission model described at § 80.45 shall be used to adjust the emission performance of the addition and extension fuels to compensate for differences in fuel compositions that are incorporated in the complex model, as described at § 80.48. Compensating adjustments for naturally-resulting variations in fuel parameters shall also be made using the complex model. The adjustment process is described in paragraph (d) of this section.

(d) The complex emission model described at § 80.45 shall be used to adjust the emission performance of addition and extension fuels to compensate for differences in fuel parameters other than the parameter being tested. Compensating adjustments for naturally-resulting variations in fuel parameters shall also be made using the complex model. These adjustments shall be calculated as follows:

(1) Determine the exhaust emissions performance of the actual addition or extension fuels relative to the exhaust emissions performance of Clean Air Act baseline fuel using the complex model. For addition fuels, set the level of the parameter being tested at baseline levels for purposes of emissions performance evaluation using the complex model. For extension fuel #1, set the level of the parameter being extended at the level specified in extension fuel #2. Also determine the exhaust emissions performance of the addition fuels specified in paragraph (a)(1) of this section with the level of the parameter being tested set at baseline levels.

(2) Calculate adjustment factors for each addition fuel as follows:

(i) Adjustment factors shall be calculated using the formula:

$$A = \frac{[1 + (P(\text{actual})/100)]}{[1 + (P(\textit{nominal})/100)]}$$

where

A = the adjustment factor

P(actual) = the performance of the actual fuel used in testing according to the complex model

P(nominal) = the performance that would have been achieved by the test fuel defined in paragraph (a)(1) of this section according to the complex model (as described in paragraph (d)(1) of this section).

(ii) Adjustment factors shall be calculated for each pollutant and for each emitter class.

(3) Multiply the measured emissions from each vehicle by the corresponding adjustment factor for the appropriate addition or extension fuel, pollutant, and emitter class. Use the resulting adjusted emissions to conduct all modeling and emission effect estimation activities described in § 80.48.

(e) All fuels included in vehicle testing programs shall have an octane number of 87.5, as measured by the (R+M)/2 method following the ASTM D4814 procedures, to within the measurement and blending tolerances specified in paragraph (c) of this section.

(f) A single batch of each addition or extension fuel shall be used throughout the duration of the testing program.

[59 FR 7813, Feb. 16, 1994, as amended at 59 FR 36962, July 20, 1994; 71 FR 74567, Dec. 15, 2005]

§ 80.50 General test procedure requirements for augmentation of the emission models.

(a) The following test procedure must be followed when testing to augment the complex emission model described at § 80.45.

(1) VOC, NO_X, CO, and CO_2 emissions must be measured for all fuel-vehicle combinations tested.

(2) Toxics emissions must be measured when testing the extension fuels per the requirements of § 80.49(b) or when testing addition fuels 1, 2, or 3 per the requirements of § 80.49(a).

(3) When testing addition fuels 4, 5, 6, and 7 per the requirements of § 80.49(a), toxics emissions need not be measured. However, EPA reserves the right to require the inclusion of such measurements in the test program prior to approval of the test program if evidence exists which suggests that adverse interactive effects of the parameter in question may exist for toxics emissions.

(b) The general requirements per 40 CFR 86.130–96 shall be met.

(c) The engine starting and restarting procedures per 40 CFR 86.136–90 shall be followed.

(d) Except as provided for at § 80.59, general preparation of vehicles being

tested shall follow procedures detailed in 40 CFR 86.130–96 and 86.131–96.

[59 FR 7813, Feb. 16, 1994, as amended at 71 FR 74567, Dec. 15, 2005]

§ 80.51 Vehicle test procedures.

The test sequence applicable when augmenting the emission models through vehicle testing is as follows:

(a) Prepare vehicles per § 80.50.

(b) Initial preconditioning per § 80.52(a)(1). Vehicles shall be refueled randomly with the fuels required in § 80.49 when testing to augment the complex emission model.

(c) Exhaust emissions tests, dynamometer procedure per 40 CFR 86.137–90 with:

(1) Exhaust Benzene and 1,3–Butadiene emissions measured per § 80.55; and

(2) Formaldehyde and Acetelaldehyde emissions measured per § 80.56.

§ 80.52 Vehicle preconditioning.

(a) Initial vehicle preconditioning and preconditioning between tests with different fuels shall be performed in accordance with the ''General vehicle handling requirements'' per 40 CFR 86.132–96, up to and including the completion of the hot start exhaust test.

(b) The preconditioning procedure prescribed at 40 CFR 86.132–96 shall be observed for preconditioning vehicles between tests using the same fuel.

§§ 80.53–80.54 [Reserved]

§ 80.55 Measurement methods for benzene and 1,3-butadiene.

(a) Sampling for benzene and 1,3-butadiene must be accomplished by bag sampling as used for total hydrocarbons determination. This procedure is detailed in 40 CFR 86.109.

(b) Benzene and 1,3-butadiene must be analyzed by gas chromatography. Expected values for benzene and 1,3-butadiene in bag samples for the baseline fuel are 4.0 ppm and 0.30 ppm respectively. At least three standards ranging from at minimum 50% to 150% of these expected values must be used to calibrate the detector. An additional standard of at most 0.01 ppm must also be measured to determine the required limit of quantification as described in paragraph (d) of this section.

(c) The sample injection size used in the chromatograph must be sufficient to be above the laboratory determined limit of quantification (LOQ) as defined in paragraph (d) of this section for at least one of the bag samples. A control chart of the measurements of the standards used to determine the response, repeatability, and limit of quantitation of the instrumental method for 1,3-butadiene and benzene must be reported.

(d) As in all types of sampling and analysis procedures, good laboratory practices must be used. See, Lawrence, Principals of Environmental Analysis, 55 Analytical Chemistry 14, at 2210–2218 (1983) (copies may be obtained from the publisher, American Chemical Society, 1155 16th Street NW., Washington, DC 20036). Reporting reproducibility control charts and limits of detection measurements are integral procedures to assess the validity of the chosen analytical method. The repeatability of the test method must be determined by measuring a standard periodically during testing and recording the measured values on a control chart. The control chart shows the error between the measured standard and the prepared standard concentration for the periodic testing. The error between the measured standard and the actual standard indicates the uncertainty in the analysis. The limit of detection (LOD) is determined by repeatedly measuring a blank and a standard prepared at a concentration near an assumed value of the limit of detection. If the average concentration minus the average of the blanks is greater than three standard deviations of these measurements, then the limit of detection is at least as low as the prepared standard. The limit of quantitation (LOQ) is defined as ten times the standard deviation of these measurements. This quantity defines the amount of sample required to be measured for a valid analysis.

(e) Other sampling and analytical techniques will be allowed if they can be proven to have equal specificity and equal or better limits of quantitation. Data from alternative methods that can be demonstrated to have equivalent or superior limits of detection,

precision, and accuracy may be accepted by the Administrator with individual prior approval.

§ 80.56 Measurement methods for formaldehyde and acetaldehyde.

(a) Formaldehyde and acetaldehyde will be measured by drawing exhaust samples from heated lines through either 2,4–Dinitrophenylhydrazine (DNPH) impregnated cartridges or impingers filled with solutions of DNPH in acetonitrile (ACN) as described in §§ 86.109 and 86.140 of this chapter for formaldehyde analysis. Diluted exhaust sample volumes must be at least 15 L for impingers containing 20 ml of absorbing solution (using more absorbing solution in the impinger requires proportionally more gas sample to be taken) and at least 4 L for cartridges. As required in § 86.109 of this chapter, two impingers or cartridges must be connected in series to detect breakthrough of the first impinger or cartridge.

(b) In addition, sufficient sample must be drawn through the collecting cartridges or impingers so that the measured quantity of aldehyde is sufficiently greater than the minimum limit of quantitation of the test method for at least a portion of the exhaust test procedure. The limit of quantitation is determined using the technique defined in § 80.55(d).

(c) Each of the impinger samples are quantitatively transferred to a 25 mL volumetric flask (5 mL more than the sample impinger volume) and brought to volume with ACN. The cartridge samples are eluted in reversed direction by gravity feed with 6mL of ACN. The eluate is collected in a graduated test tube and made up to the 5mL mark with ACN. Both the impinger and cartridge samples must be analyzed by HPLC without additional sample preparation.

(d) The analysis of the aldehyde derivatives collected is accomplished with a high performance liquid chromatograph (HPLC). Standards consisting of the hydrazone derivative of formaldehyde and acetaldehyde are used to determine the response, repeatability, and limit of quantitation of the HPLC method chosen for acetaldehyde and formaldehyde.

(e) Other sampling and analytical techniques will be allowed if they can be proven to have equal specificity and equal or better limits of quantitation. Data from alternative methods that can be demonstrated to have equivalent or superior limits of detection, precision, and accuracy may be accepted by the Administrator with individual prior approval.

§§ 80.57–80.58 [Reserved]

§ 80.59 General test fleet requirements for vehicle testing.

(a) The test fleet must consist of only 1989–91 MY vehicles which are technologically equivalent to 1990 MY vehicles, or of 1986–88 MY vehicles for which no changes to the engine or exhaust system that would significantly affect emissions have been made through the 1990 model year. To be technologically equivalent vehicles at minimum must have closed-loop systems and possess adaptive learning.

(b) No maintenance or replacement of any vehicle component is permitted except when necessary to ensure operator safety or as specifically permitted in § 80.60 and § 80.61. All vehicle maintenance procedures must be reported to the Administrator.

(c) Each vehicle in the test fleet shall have no fewer than 4,000 miles of accumulated mileage prior to being included in the test program.

[59 FR 7813, Feb. 16, 1994, as amended at 59 FR 36962, July 20, 1994]

§ 80.60 Test fleet requirements for exhaust emission testing.

(a) Candidate vehicles which conform to the emission performance requirements defined in paragraphs (b) through (d) of this section shall be obtained directly from the in-use fleet and tested in their as-received condition.

(b) Candidate vehicles for the test fleet must be screened for their exhaust VOC emissions in accordance with the provisions in § 80.62.

(c) On the basis of pretesting pursuant to paragraph (b) of this section, the test fleet shall be subdivided into two emitter group sub-fleets: the normal emitter group and the higher emitter group.

(1) Each vehicle with an exhaust total hydrocarbon (THC) emissions rate which is less than or equal to twice the applicable emissions standard shall be placed in the normal emitter group.

(2) Each vehicle with an exhaust THC emissions rate which is greater than two times the applicable emissions standard shall be placed in the higher emitter group.

(d) The test vehicles in each emitter group must conform to the requirements of paragraphs (d)(1) through (4) of this section.

(1) Test vehicles for the normal emitter sub-fleet must be selected from the list shown in this paragraph (d)(1). This list is arranged in order of descending vehicle priority, such that the order in which vehicles are added to the normal emitter sub-fleet must conform to the order shown (e.g., a ten-vehicle normal emitter group sub-fleet must consist of the first ten vehicles listed in this paragraph (d)(1)). If more vehicles are tested than the minimum number of vehicles required for the normal emitter sub-fleet, additional vehicles are to be added to the fleet in the order specified in this paragraph (d)(1), beginning with the next vehicle not already included in the group. The vehicles in the normal emitter sub-fleet must possess the characteristics indicated in the list. If the end of the list is reached in adding vehicles to the normal emitter sub-fleet and additional vehicles are desired then they shall be added beginning with vehicle number one, and must be added to the normal emitter sub-fleet in accordance with the order in table A:

TABLE A—TEST FLEET DEFINITIONS

Veh. No.	Fuel system	Catalyst	Air injection	EGR	Tech. group	Manufacturer
1	Multi	3W	No Air	EGR	1	GM.
2	Multi	3W	No Air	No EGR	2	Ford.
3	TBI	3W	No Air	EGR	3	GM.
4	Multi	3W+OX	Air	EGR	4	Ford.
5	Multi	3W	No Air	EGR	1	Honda.
6	Multi	3W	No Air	No EGR	2	GM.
7	TBI	3W	No Air	EGR	3	Chrysler.
8	Multi	3W+OX	Air	EGR	4	GM.
9	TBI	3W+OX	Air	EGR	7	Chrysler.
10	Multi	3W	Air	EGR	5	Toyota.
11	Multi	3W	No Air	EGR	1	Ford.
12	Multi	3W	No Air	No EGR	2	Chrysler.
13	Carb	3W+OX	Air	EGR	9	Toyota.
14	TBI	3W	No Air	EGR	3	Ford.
15	Multi	3W+OX	Air	EGR	4	GM.
16	Multi	3W	No Air	EGR	1	Toyota.
17	Multi	3W	No Air	No EGR	2	Mazda.
18	TBI	3W	No Air	EGR	3	GM.
19	Multi	3W+OX	Air	EGR	4	Ford.
20	Multi	3W	No Air	EGR	1	Nissan.

TABLE B—TECH GROUP DEFINITIONS IN TABLE A

Tech group	Fuel system	Catalyst	Air injection	EGR
1	Multi	3W	No Air	EGR.
2	Multi	3W	No Air	No EGR.
3	TBI	3W	No Air	EGR.
4	Multi	3W+OX	Air	EGR.
5	Multi	3W	Air	EGR.
6	TBI	3W	Air	EGR.
7	TBI	3W+OX	Air	EGR.
8	TBI	3W	No Air	No EGR.
9	Carb	3W+OX	Air	EGR.

Legend:

Fuel system:

Multi = Multi-point fuel injection

TBI = Throttle body fuel injection

Carb = Carburetted

Catalyst:

3W = 3–Way catalyst
3W+OX = 3–Way catalyst plus an oxidation catalyst
Air Injection:
Air = Air injection
EGR = Exhaust gas recirculation

(2) Test vehicles for the higher emitter sub-fleet shall be selected from the in-use fleet in accordance with paragraphs (a) and (b) of this section and with § 80.59. Test vehicles for the higher emitter sub-fleet are not required to follow the pattern established in paragraph (d)(1) of this section.

(3) The minimum test fleet size is 20 vehicles. Half of the vehicles tested must be included in the normal emitter sub-fleet and half of the vehicles tested must be in the higher emitter sub-fleet. If additional vehicles are tested beyond the minimum of twenty vehicles, the additional vehicles shall be distributed equally between the normal and higher emitter sub-fleets.

(4) For each emitter group sub-fleet, 70 ±9.5% of the sub-fleet must be LDVs, & 30 ±9.5% must be LDTs. LDTs include light-duty trucks class 1 (LDT1), and light-duty trucks class 2 (LDT2) up to 8500 lbs GVWR.

§ 80.61 [Reserved]

§ 80.62 Vehicle test procedures to place vehicles in emitter group sub-fleets.

One of the two following test procedures must be used to screen candidate vehicles for their exhaust THC emissions to place them within the emitter group sub-fleets in accordance with the requirements of § 80.60.

(a) Candidate vehicles may be tested for their exhaust THC emissions using the Federal test procedure as detailed in 40 CFR part 86, with gasoline conforming to requirements detailed in 40 CFR 86.113–90. The results shall be used in accordance with the requirements in § 80.60 to place the vehicles within their respective emitter groups.

(b) Alternatively, candidate vehicles may be screened for their exhaust THC emissions with the IM240 short test procedure.[1] The results from the IM240 shall be converted into results comparable with the standard exhaust FTP as detailed in this paragraph (b) to place the vehicles within their respective emitter groups in accordance with the requirements of § 80.60.

(1) A candidate vehicle with IM240 test results <0.367 grams THC per vehicle mile shall be classified as a normal emitter.

(2) A candidate vehicle with IM240 test results ≥0.367 grams THC per vehicle mile shall be classified as a higher emitter.

§§ 80.63–80.64 [Reserved]

§ 80.65 General requirements for refiners and importers.

(a) *Date requirements begin.* The requirements of this subpart D apply to all gasoline produced, imported, transported, stored, sold, or dispensed:

(1) At any location other than retail outlets and wholesale purchaser-consumer facilities on or after December 1, 1994; and

(2) At any location on or after January 1, 1995.

(b) *Certification of gasoline and RBOB.* Gasoline or RBOB sold or dispensed in a covered area must be certified under § 80.40.

(c) *Standards must be met on either a per-gallon or on an average basis.* (1) Any refiner or importer, for each batch of reformulated gasoline or RBOB it produces or imports, shall meet:

(i) Those standards and requirements it designated under paragraph (d) of this section for per-gallon compliance on a per-gallon basis; and

(ii) Those standards and requirements it designated under paragraph (d) of this section for average compliance on an average basis over the applicable averaging period.

(2) [Reserved]

(3)(i) For each averaging period, and separately for each parameter that may be met either per-gallon or on average, any refiner shall designate for each refinery, or any importer shall designate its gasoline or RBOB as being subject to the standard applicable to that parameter on either a per-

[1] EPA Technical Report EPA-AA-TSS-91-1. Copies may be obtained by ordering publication number PB92104405 from the National Technical Information Service, 5285 Port Royal Road, Springfield, Virginia 22161.

gallon or average basis. For any specific averaging period and parameter all batches of gasoline or RBOB shall be designated as being subject to the per-gallon standard, or all batches of gasoline and RBOB shall be designated as being subject to the average standard. For any specific averaging period and parameter a refiner for a refinery, or any importer may not designate certain batches as being subject to the per-gallon standard and others as being subject to the average standard.

(ii) In the event any refiner for a refinery, or any importer fails to meet the requirements of paragraph (c)(3)(i) of this section and for a specific averaging period and parameter designates certain batches as being subject to the per-gallon standard and others as being subject to the average, all batches produced or imported during the averaging period that were designated as being subject to the average standard shall, *ab initio*, be redesignated as being subject to the per-gallon standard. This redesignation shall apply regardless of whether the batches in question met or failed to meet the per-gallon standard for the parameter in question.

(d) *Designation of gasoline.* Any refiner or importer of gasoline shall designate the gasoline it produces or imports as follows:

(1) All gasoline produced or imported shall be properly designated as either reformulated or conventional gasoline, or as RBOB.

(2) All gasoline designated as reformulated or as RBOB shall be further properly designated as:

(i) Either VOC-controlled or not VOC-controlled;

(ii) In the case of gasoline or RBOB designated as VOC-controlled:

(A) Either intended for use in VOC-Control Region 1 or VOC-Control Region 2 (as defined in § 80.71); or

(B) Designated as ''adjusted VOC gasoline'' (as defined in § 80.40(c)(1));

(iii) [Reserved]

(iv) For gasoline or RBOB produced, imported, sold, dispensed or used during the period January 1, 1995 through December 31, 1997, either as being subject to the simple model standards, or to the complex model standards;

(v) For each of the following parameters, either gasoline or RBOB which meets the standard applicable to that parameter on a per-gallon basis or on average:

(A) Toxics emissions performance;

(B) NO_X emissions performance in the case of gasoline certified using the complex model.

(C) Benzene content;

(D) [Reserved]

(E) In the case of VOC-controlled gasoline or RBOB certified using the simple model, RVP; and

(F) In the case of VOC-controlled gasoline or RBOB certified using the complex model, VOC emissions performance; and

(vi) In the case of RBOB, the gasoline must be designated as RBOB and the designation must include the type(s) and amount(s) of oxygenate required to be blended with the RBOB.

(3) Every batch of reformulated or conventional gasoline or RBOB produced or imported at each refinery or import facility shall be assigned a number (the ''batch number''), consisting of the EPA-assigned refiner or importer registration number, the EPA facility registration number, the last two digits of the year in which the batch was produced, and a unique number for the batch, beginning with the number one for the first batch produced or imported each calendar year and each subsequent batch during the calendar year being assigned the next sequential number (*e.g.*, 4321–54321–95–000001, 4321–543321–95–000002, etc.)

(e) *Determination of volume and properties.* (1) Each refiner or importer shall for each batch of reformulated gasoline or RBOB produced or imported determine the volume and the value of each of the properties specified in paragraph (e)(2)(i) of this section, except that the value for RVP must be determined only in the case of reformulated gasoline or RBOB that is VOC-controlled. These determinations shall:

(i) Be based on a representative sample of the reformulated gasoline or RBOB that is analyzed using the methodologies specified in § 80.46;

(ii) In the case of RBOB, follow the oxygenate blending instructions specified in § 80.69(a);

(iii) Be carried out either by the refiner or importer, or by an independent laboratory; and

(iv) Be completed prior to the gasoline or RBOB leaving the refinery or import facility for each parameter that the gasoline or RBOB is subject to, or that is used to calculate an emissions performance that the gasoline or RBOB is subject to, under § 80.41(a) through (f).

(2) In the event that the values of any of these properties is determined by the refiner or importer and by an independent laboratory in conformance with the requirements of paragraph (f) of this section:

(i) The results of the analyses conducted by the refiner or importer for such properties shall be used as the basis for compliance determinations unless the absolute value of the differences of the test results from the two laboratories is larger than the following values:

Fuel property	Range
Sulfur content	25 ppm
Aromatics content	2.7 vol %
Olefins content	2.5 vol %
Benzene content	0.21 vol %
Ethanol content	0.4 vol %
Methanol content	0.2 vol %
MTBE (and other methyl ethers) content	0.6 vol %
ETBE (and other ethyl ethers) content	0.6 vol %
TAME	0.6 vol %
t-Butanol content	0.6 vol %
RVP	0.3 psi
50% distillation (T50)	5 °F
90% distillation (T90)	5 °F
E200	2.5 vol %
E300	3.5 vol %
API Gravity	0.3 °API

(ii) In the event the values from the two laboratories for any property fall outside these ranges, the refiner or importer shall use as the basis for compliance determinations:

(A) The larger of the two values for the property, except the smaller of the two results shall be used for oxygenates; or

(B) The refiner or importer shall have the gasoline analyzed for the property at one additional independent laboratory. If this second independent laboratory obtains a result for the property that is within the range, as listed in paragraph (e)(2)(i) of this section, of the refiner's or importer's result for this property, then the refiner's or importer's result shall be used as the basis for compliance determinations.

(f) *Independent analysis requirement.* (1) Any refiner or importer of reformulated gasoline or RBOB shall carry out a program of independent sample collection and analyses for the reformulated gasoline it produces or imports, which meets the requirements of one of the following two options:

(i) *Option 1.* The refiner or importer shall, for each batch of reformulated gasoline or RBOB that is produced or imported, have the value for each property specified in paragraph (e)(2)(i) of this section determined by an independent laboratory that collects and analyzes a representative sample from the batch using the methodologies specified in § 80.46.

(ii) *Option 2.* The refiner or importer shall have a periodic independent testing program carried out for all reformulated gasoline produced or imported, which shall consist of the following:

(A) An independent laboratory shall collect a representative sample from each batch of reformulated gasoline that the refiner or importer produces or imports;

(B) EPA will identify up to ten percent of the total number of samples collected under paragraph (f)(1)(ii)(A) of this section; and

(C) The designated independent laboratory shall, for each sample identified by EPA under paragraph (f)(1)(ii)(B) of this section, determine the value for each property using the methodologies specified in § 80.46.

(2)(i) Any refiner or importer shall designate one independent laboratory for each refinery or import facility at which reformulated gasoline or RBOB is produced or imported. This independent laboratory will collect samples and perform analyses in compliance with the requirements of this paragraph (f) of this section.

(ii) Any refiner or importer shall identify this designated independent laboratory to EPA under the registration requirements of § 80.76.

(iii) In order to be considered independent:

(A) The laboratory shall not be operated by any refiner or importer, and shall not be operated by any subsidiary or employee of any refiner or importer;

(B) The laboratory shall be free from any interest in any refiner or importer; and

(C) The refiner or importer shall be free from any interest in the laboratory; however

(D) Notwithstanding the restrictions in paragraphs (f)(2)(iii) (A) through (C) of this section, a laboratory shall be considered independent if it is owned or operated by a gasoline pipeline company, regardless of ownership or operation of the gasoline pipeline company by refiners or importers, provided that such pipeline company is owned and operated by four or more refiners or importers.

(iv) Use of a laboratory that is debarred, suspended, or proposed for debarment pursuant to the Governmentwide Debarment and Suspension regulations, 2 CFR part 1532, or the Debarment, Suspension and Ineligibility provisions of the Federal Acquisition Regulations, 48 CFR part 9, subpart 9.4, shall be deemed noncompliance with the requirements of this paragraph (f).

(v) Any laboratory that fails to comply with the requirements of this paragraph (f) shall be subject to debarment or suspension under Governmentwide Debarment and Suspension regulations, 2 CFR part 1532, or the Debarment, Suspension and Ineligibility regulations, Federal Acquisition Regulations, 48 CFR part 9, subpart 9.4.

(3) Any refiner or importer shall, for all samples collected or analyzed pursuant to the requirements of this paragraph (f), cause its designated independent laboratory:

(i) At the time the designated independent laboratory collects a representative sample from a batch of reformulated gasoline, to:

(A) Obtain the refiner's or importer's assigned batch number for the batch being sampled;

(B) Determine the volume of the batch;

(C) Determine the identification number of the gasoline storage tank or tanks in which the batch was stored at the time the sample was collected;

(D) Determine the date and time the batch became finished reformulated gasoline, and the date and time the sample was collected;

(E) Determine the grade of the batch (e.g., premium, mid-grade, or regular); and

(F) In the case of reformulated gasoline produced through computer-controlled in-line blending, determine the date and time the blending process began and the date and time the blending process ended, unless exempt under paragraph (f)(4) of this section;

(ii) To retain each sample collected pursuant to the requirements of this paragraph (f) for a period of 30 days, except that this period shall be extended to a period of up to 180 days upon request by EPA;

(iii) To submit to EPA periodic reports, as follows:

(A) A report for the period January through March shall be submitted by May 31; a report for the period April through June shall be submitted by August 31; a report for the period July through September shall be submitted by November 30; and a report for the period October through December shall be submitted by February 28;

(B) Each report shall include, for each sample of reformulated gasoline that was analyzed pursuant to the requirements of this paragraph (f):

(*1*) The results of the independent laboratory's analyses for each property; and

(*2*) The information specified in paragraph (f)(3)(i) of this section for such sample; and

(iv) To supply to EPA, upon EPA's request, any sample collected or a portion of any such sample.

(4) Any refiner that produces reformulated gasoline using computer-controlled in-line blending equipment is exempt from the independent sampling and testing requirements specified in paragraphs (f)(1) through (3) of this section and from the requirement of paragraph (e)(1) of this section to obtain test results for each batch prior to the gasoline leaving the refinery, provided that such refiner:

(i) Obtains from EPA an exemption from these requirements. In order to seek such an exemption, the refiner shall submit a petition to EPA, such petition to include:

(A) A description of the refiner's computer-controlled in-line blending operation, including a description of:

(*1*) The location of the operation;

(*2*) The length of time the refiner has used the operation;

(*3*) The volumes of gasoline produced using the operation since the refiner began the operation or during the previous three years, whichever is shorter, by grade;

(*4*) The movement of the gasoline produced using the operation to the point of fungible mixing, including any points where all or portions of the gasoline produced is accumulated in gasoline storage tanks;

(*5*) The physical lay-out of the operation;

(*6*) The automated control system, including the method of monitoring and controlling blend properties and proportions;

(*7*) Any sampling and analysis of gasoline that is conducted as a part of the operation, including on-line, off-line, and composite, and a description of the methods of sampling, the methods of analysis, the parameters analyzed and the frequency of such analyses, and any written, printed, or computer-stored results of such analyses, including information on the retention of such results;

(*8*) Any sampling and analysis of gasoline produced by the operation that occurs downstream from the blending operation prior to fungible mixing of the gasoline, including any such sampling and analysis by the refiner and by any purchaser, pipeline or other carrier, or by independent laboratories;

(*9*) Any quality assurance procedures that are carried out over the operation; and

(*10*) Any occasion(s) during the previous three years when the refiner adjusted any physical or chemical property of any gasoline produced using the operation downstream from the operation, including the nature of the adjustment and the reason the gasoline had properties that required adjustment; and

(B) A description of the independent audit program of the refiner's computer-controlled in-line blending operation that the refiner proposes will satisfy the requirements of this paragraph (f)(4); and

(ii) Carries out an independent audit program of the refiner's computer-controlled in-line blending operation, such program to include:

(A) For each batch of reformulated gasoline produced using the operation, a review of the documents generated that is sufficient to determine the properties and volume of the gasoline produced;

(B) Audits that occur no less frequently than annually;

(C) Reports of the results of such audits submitted to the refiner, and to EPA by the auditor no later than February 28 of each year;

(D) Audits that are conducted by an auditor that meets the non-debarred criteria specified in § 80.125 (a) and/or (d); and

(iii) Complies with any other requirements that EPA includes as part of the exemption.

(g) [Reserved]

(h) *Compliance audits*. Any refiner and importer of any reformulated gasoline or RBOB shall have the reformulated gasoline and RBOB it produced or imported during each calendar year audited for compliance with the requirements of this subpart D, in accordance with the requirements of subpart F, at the conclusion of each calendar year.

(i) *Exclusion of previously certified gasoline*. Any refiner who uses previously certified reformulated or conventional gasoline or RBOB to produce reformulated gasoline or RBOB must exclude the previously certified gasoline for purposes of demonstrating compliance with the standards under § 80.41. This exclusion must be accomplished by the refiner as follows:

(1)(i) Determine the volume and properties of each batch of previously certified gasoline used to produce reformulated gasoline or RBOB using the procedures in paragraph (e)(1) of this section and § 80.66, and the independent analysis requirements in paragraph (f) of this section in the case of previously certified reformulated gasoline.

(ii) In the case of previously certified reformulated gasoline or RBOB determine the emissions performances for toxics and NO_X, and VOC for VOC-controlled gasoline, and the designations for VOC control.

(iii) In the case of previously certified conventional gasoline determine the exhaust toxics and NO_X emissions performances.

(2) Determine the volume and properties, and the emissions performance for toxics and NO_X, and VOC for VOC-controlled gasoline, of any batch of reformulated gasoline or RBOB produced at the refinery using previously certified gasoline and include each batch in the refinery's compliance calculations without regard to the presence of previously certified gasoline in the batch.

(3) In the case of any parameter or emissions performance standard that the refiner has designated for the refinery to meet on a per-gallon basis under paragraph (d)(2)(v) of this section, the per-gallon standard that applies to any batch of reformulated gasoline or RBOB produced by the refinery is as follows:

(i) When using any previously certified reformulated gasoline or RBOB, the more stringent of:

(A) The per-gallon standard that applies to the refinery under § 80.41; or

(B) The most stringent value for that parameter or emissions performance for any previously certified reformulated gasoline or RBOB used to produce the batch.

(ii) When using any previously certified conventional gasoline, the per-gallon standard that applies to the refinery under § 80.41.

(4) In the case of any parameter or emissions performance standard that the refiner has designated for the refinery to meet on average under paragraph (d)(2)(v) of this section, any previously certified gasoline must be excluded from the refinery's compliance calculations as follows:

(i) Where a refiner uses previously certified reformulated gasoline or RBOB to produce reformulated gasoline or RBOB:

(A) The refiner must include the volume and properties of any batch of previously certified reformulated gasoline or RBOB in the refinery's compliance calculations for the standard under § 80.67(g) as a negative batch, by multiplying the term V_i in § 80.67(g)(1)(ii) (i.e., the batch volume) times negative 1; and

(B) The negative batch under paragraph (i)(4)(i)(A) of this section must be included in the averaging categories that correspond to the designation regarding VOC control of the previously certified gasoline batch when received; and

(C) The net volume of gasoline in the refinery's reformulated gasoline compliance calculations must be positive in each of the following categories where the standard is being met on average:

Standard	Gasoline category that must have net positive volume
(*1*) Oxygen	All RFG [1].
(*2*) Benzene	All RFG and RBOB.
(*3*) VOC emissions performance.	(*i*)RFG and RBOB that is VOC-controlled for Region 1. (*ii*) RFG and RBOB that is VOC-controlled for Region 2.
(*4*) Toxics emissions performance.	All RFG and RBOB.
(*5*) NO_X emissions performance.	(*i*) All RFG and RBOB. (*ii*) RFG and RBOB that is VOC-controlled.

[1] "RFG" is an abbreviation for reformulated gasoline.

(ii) Where a refiner uses previously certified conventional gasoline to produce reformulated gasoline or RBOB:

(A) The refiner must include the volume and properties of any batch of previously certified conventional gasoline as a negative batch in the refiner's anti-dumping compliance calculations under § 80.101(g) for the refinery, or where applicable, the refiner's aggregation under § 80.101(h); and

(B) The net volume of gasoline in the refiner's anti-dumping compliance calculations for the refinery, or, where applicable, the refiner's aggregation under § 80.101(h), must be positive.

(5) The refiner must use any previously certified gasoline that the refiner includes as a negative batch under paragraph (i)(4) of this section in its compliance calculations for the refinery, or where appropriate, the refiner's aggregation, as a component in gasoline production during the annual averaging period in which the previously certified gasoline was included as a negative batch in the refiner's compliance calculations.

(6) (i) Any refiner may use the procedures specified in this paragraph (i) to

combine previously certified conventional gasoline with reformulated gasoline or RBOB, to reclassify conventional gasoline into reformulated gasoline or RBOB, or to change the designations of reformulated gasoline or RBOB with regard to VOC control.

(ii) The procedures under this section are refinery procedures. Any person who uses the procedures under this section is a refiner who must meet all requirements applicable to refiners under this subpart.

(7) Nothing in this paragraph (i) prevents any party from combining previously certified reformulated gasolines from different sources in a manner that does not violate the prohibitions in § 80.78(a).

[59 FR 7813, Feb. 16, 1994, as amended at 59 FR 36962, July 20, 1994; 59 FR 39289, Aug. 2, 1994; 59 FR 60715, Nov. 28, 1994; 62 FR 60135, Nov. 6, 1997; 66 FR 37165, July 17, 2001; 66 FR 67105, Dec. 28, 2001; 67 FR 8737, Feb. 26, 2002; 71 FR 74567, Dec. 15, 2005; 71 FR 26698, May 8, 2006; 72 FR 2427, Jan. 19, 2007]

§ 80.66 Calculation of reformulated gasoline properties.

(a) All volume measurements required by these regulations shall be temperature adjusted to 60 degrees Fahrenheit.

(b) The percentage of oxygen by weight contained in a gasoline blend, based upon its percentage oxygenate by volume and density, shall exclude denaturants and water.

(c) The properties of reformulated gasoline consist of per-gallon values separately and individually determined on a batch-by-batch basis using the methodologies specified in § 80.46 for each of those physical and chemical parameters necessary to determine compliance with the standards to which the gasoline is subject, and per-gallon values for the VOC, NO_X, and toxics emissions performance standards to which the gasoline is subject.

(d) Per-gallon oxygen content shall be determined based upon the weight percent oxygen of a representative sample of gasoline, using the method set forth in § 80.46(g). The total oxygen content associated with a batch of gasoline (in percent-gallons) is calculated by multiplying the weight percent oxygen content times the volume.

(e) Per-gallon benzene content shall be determined based upon the volume percent benzene of a representative sample of a batch of gasoline by the method set forth in § 80.46(e). The total benzene content associated with a batch of gasoline (in percent-gallons) is calculated by multiplying the volume percent benzene content times the volume.

(f) Per-gallon RVP shall be determined based upon the measurement of RVP of a representative sample of a batch of gasoline by the sampling methodologies specified in appendix D of this part and the testing methodology specified in appendix E of this part. The total RVP value associated with a batch of gasoline (in RVP-gallons) is calculated by multiplying the RVP times the volume.

(g)(1) Per gallon values for VOC and NO_X emissions reduction shall be calculated using the methodology specified in § 80.45 that is appropriate for the gasoline.

(2) Per-gallon values for toxic emissions performance reduction shall be established using:

(i) For gasoline subject to the simple model, the methodology under § 80.42 that is appropriate for the gasoline; and

(ii) For gasoline subject to the complex model, the methodology specified in § 80.45 that is appropriate for the gasoline.

(3) The total VOC, NO_X, and toxic emissions performance reduction values associated with a batch of gasoline (in percent reduction-gallons) is calculated by multiplying the per-gallon percent emissions performance reduction times the volume of the batch.

[59 FR 7813, Feb. 16, 1994, as amended at 59 FR 36963, July 20, 1994]

§ 80.67 Compliance on average.

The requirements of this section apply to all reformulated gasoline and RBOB produced or imported for which compliance with one or more of the requirements of § 80.41 is determined on average (''averaged gasoline'').

(a) *Compliance survey required in order to meet standards on average.* (1) Any refiner or importer that complies with the compliance survey requirements of § 80.68 has the option of meeting the

standards specified in § 80.41 for average compliance in addition to the option of meeting the standards specified in § 80.41 for per-gallon compliance; any refiner or importer that does not comply with the survey requirements must meet the standards specified in § 80.41 for per-gallon compliance, and does not have the option of meeting standards on average.

(2)(i)(A) A refiner or importer that produces or imports reformulated gasoline that exceeds the average standard for benzene (but not for other parameters that have average standards) may use such gasoline to offset reformulated gasoline which does not achieve this average standard, but only if the reformulated gasoline that does not achieve this average standard is sold to ultimate consumers in the same covered area as was the reformulated gasoline which exceeds the average standard; provided that:

(B) Prior to the beginning of the averaging period when the averaging approach described in paragraph (a)(2)(i)(A) of this section is used, the refiner or importer obtains approval from EPA. In order to seek such approval, the refiner or importer shall submit a petition to EPA, such petition to include:

(*1*) The identification of the refiner and refinery, or importer, the covered area, and the averaging period; and

(*2*) A detailed description of the procedures the refiner or importer will use to ensure the gasoline is produced by the refiner or is imported by the importer and is used only in the covered area in question and is not used in any other covered area, and the record keeping, reporting, auditing, and other quality assurance measures that will be followed to establish the gasoline is used as intended; and

(C) The refiner or importer properly completes any requirements that are specified by EPA as conditions for approval of the petition.

(ii) Any refiner or importer that meets the requirements of paragraph (a)(2)(i) of this section will be deemed to have satisfied the compliance survey requirements of § 80.68 for the covered area in question.

(b) *Scope of averaging*. (1) Any refiner shall meet all applicable averaged standards separately for each of the refiner's refineries;

(2)(i) Any importer shall meet all applicable averaged standards on the basis of all averaged reformulated gasoline and RBOB imported by the importer; except that

(ii) Any importer to whom different standards apply for gasoline imported at different facilities by operation of § 80.41(i), shall meet the averaged standards separately for the averaged reformulated gasoline and RBOB imported into each group of facilities that is subject to the same standards; and

(3) [Reserved]

(c) *RVP and VOC emissions performance reduction compliance on average*. (1) The VOC-controlled reformulated gasoline and RBOB produced at any refinery or imported by any importer during the period January 1 through September 15 of each calendar year which is designated for average compliance for RVP or VOC emissions performance on average must meet the standards for RVP (in the case of a refinery or importer subject to the simple model standards) or the standards for VOC emissions performance reduction (in the case of a refinery or importer subject to the complex model standards) which are applicable to that refinery or importer as follows:

(i) Gasoline and RBOB designated for VOC Control Region 1 must meet the standards for that Region which are applicable to that refinery or importer; and

(ii) Gasoline and RBOB designated for VOC Control Region 2 must meet the standards for that Region which are applicable to that refinery or importer.

(2) In the case of a refinery or importer subject to the simple model standards, each gallon of reformulated gasoline and RBOB designated as being VOC-controlled may not exceed the maximum standards for RVP specified in § 80.41(b) which are applicable to that refiner or importer.

(3) In the case of a refinery or importer subject to the complex model standards, each gallon of reformulated

gasoline designated as being VOC-controlled must equal or exceed the minimum standards for VOC emissions performance specified in § 80.41 which are applicable to that refinery or importer.

(d) *Toxics emissions reduction and benzene compliance on average.* (1) The averaging period for the requirements for benzene content and toxics emission performance is January 1 through December 31 of each year.

(2) The reformulated gasoline and RBOB produced at any refinery or imported by any importer during the toxics emissions performance and benzene averaging periods that is designated for average compliance for these parameters shall on average meet the standards specified for toxics emissions performance and benzene in § 80.41 which are applicable to that refinery or importer.

(3) Each gallon of reformulated gasoline may not exceed the maximum standard for benzene content specified in § 80.41 which is applicable to that refinery or importer.

(e) *NO_X compliance on average.* (1) The averaging period for NO_X emissions performance is January 1 through December 31 of each year.

(2) The requirements of this paragraph (e) apply separately to reformulated gasoline and RBOB in the following categories:

(i) All reformulated gasoline and RBOB that is designated as VOC-controlled; and

(ii) All reformulated gasoline and RBOB that is not designated as VOC-controlled.

(3) The reformulated gasoline and RBOB produced at any refinery or imported by any importer during the NO_X averaging period that is designated for average compliance for NO_X shall on average meet the standards for NO_X specified in § 80.41 that are applicable to that refinery or importer.

(f) [Reserved]

(g) *Compliance calculation.* To determine compliance with the averaged standards in § 80.41, any refiner for each of its refineries at which averaged reformulated gasoline or RBOB is produced, and any importer that imports averaged reformulated gasoline or RBOB shall, for each averaging period and for each portion of gasoline for which standards must be separately achieved, and for each relevant standard, calculate:

(1)(i)(A) The compliance total using the following formula:

$$\text{COMPLIANCE TOTAL} = \left(\sum_{i=1}^{n} V_i\right) \times \text{std}$$

Where:

V_i=the volume in gallons of gasoline batch i.

std=the standard for the parameter being evaluated.

n=the number of batches of gasoline produced or imported during the averaging period.

(B) For computation of the VOC performance standard compliance total, Std for each VOC control region is determined by the following formula:

$$\text{Std} = \frac{\text{Std}_u \times \sum_{i=1}^{n_u} VU_i + \text{Std}_a \times \sum_{i=1}^{n_a} VA_i}{\sum_{i=1}^{n_u} VU_i + \sum_{i=1}^{n_a} VA_i}$$

Where, for gasoline and RBOB designated for that VOC control region:

Std=the value to be used in the compliance total formula.

Std_u=the averaged VOC emissions performance reduction standard applicable to reformulated gasoline and RBOB not designated for compliance with the adjusted VOC gasoline standard.

Std_a=the averaged VOC emissions performance reduction standard applicable to reformulated gasoline and RBOB designated for compliance with the adjusted VOC gasoline standard.

VU_i=the volume of batch i not designated for compliance with the adjusted VOC gasoline standard.

VA_i=the volume of batch i designated for compliance with the adjusted VOC gasoline standard.

n_u=the number of batches produced or imported and not designated for compliance with the adjusted VOC gasoline standard.

n_a=the number of batches produced or imported and designated for compliance with the adjusted VOC gasoline standard.

(C) The actual total using the following formula:

$$\text{ACTUAL TOTAL} = \sum_{i=1}^{n} \left(V_i \times \text{parm}_i\right)$$

Where:

V_i=the volume in gallons of gasoline batch i.

$parm_i$=the parameter value of gasoline batch i.

n=the number of batches of gasoline produced or imported during the averaging period.

(ii) [Reserved]

(2) For each standard, compare the actual total with the compliance total.

(3) For the VOC, NO_X, and toxics emissions performance standards, the actual totals must be equal to or greater than the compliance totals to achieve compliance.

(4) For RVP and benzene standards, the actual total must be equal to or less than the compliance totals to achieve compliance.

(5) If the actual total for the benzene standard is greater than the compliance total, credits for this parameter must be obtained from another refiner or importer in order to achieve compliance:

(i) [Reserved]

(ii) The total number of benzene credits required to achieve compliance is calculated by subtracting the compliance total from the actual total benzene.

(6) If the actual total for the benzene standard is less than the compliance totals, credits for this parameter are generated.

(i) [Reserved]

(ii) The total number of benzene credits which may be traded to another refinery or importer is calculated by subtracting the actual total from the compliance total for benzene.

(7) In 2006 only, compliance with the oxygen standards in § 80.41 may be based on the volume and oxygen content of all reformulated gasoline produced or imported during the period January 1, 2006, through May 5, 2006 or the volume and oxygen content of all oxygenated reformulated gasoline produced or imported during the 2006 annual averaging period (January 1 through December 31).

(h) *Credit transfers.* (1) Compliance with the averaged standards specified in § 80.41 for benzene (but for no other standards or requirements) may be achieved through the transfer of benzene credits provided that:

(i) The credits were generated in the same averaging period as they are used;

(ii) The credit transfer takes place no later than fifteen working days following the end of the averaging period in which the reformulated gasoline credits were generated;

(iii) The credits are properly created;

(iv) The credits are transferred, either through inter-company or intra-company transfers, directly from the refiner or importer that creates the credits to the refiner or importer that uses the credits to achieve compliance; and

(v) Benzene credits are not used to achieve compliance with the maximum benzene content standards in § 80.41.

(2) No party may transfer any credits to the extent such a transfer would result in the transferor having a negative credit balance at the conclusion of the averaging period for which the credits were transferred. Any credits transferred in violation of this paragraph are improperly created credits.

(3) In the case of credits that were improperly created, the following provisions apply:

(i) Improperly created credits may not be used to achieve compliance, regardless of a credit transferee's good faith belief that it was receiving valid credits;

(ii) No refiner or importer may create, report, or transfer improperly created credits; and

(iii) Where any credit transferor has in its balance at the conclusion of any averaging period both credits which were properly created and credits which were improperly created, the properly created credits will be applied first to any credit transfers before the transferor may apply any credits to achieve its own compliance.

(i) *Average compliance for reformulated gasoline produced or imported before January 1, 1995.* In the case of any reformulated gasoline that is intended to be used beginning January 1, 1995, but that is produced or imported prior to that date:

(1) Any refiner or importer may meet standards specified in § 80.41 for average compliance for such gasoline, provided the refiner or importer has the option of meeting standards on average for

1995 under paragraph (a) of this section, and provided the refiner or importer elects to be subject to average standards under § 80.65(c)(3); and

(2) Any average compliance gasoline under paragraph (i)(1) of this section shall be combined with average compliance gasoline produced during 1995 for purposes of compliance calculations under paragraph (g) of this section.

[38 FR 1255, Jan. 10, 1973, as amended at 62 FR 60135, Nov. 6, 1997; 62 FR 68207, Dec. 31, 1997; 66 FR 37165, July 17, 2001; 71 FR 74568, Dec. 15, 2005; 71 FR 26699, May 8, 2006]

§ 80.68 Compliance surveys.

(a)(1) Beginning January 1, 2007, the compliance surveys for NO_X emissions performance under this section shall cease to be required.

(2) Beginning January 1, 2011, the compliance surveys for toxics emissions performance under this section shall cease to be required.

(b) *Compliance survey option 1.* In order to satisfy the compliance survey requirements, any refiner or importer shall properly conduct a program of compliance surveys in accordance with a survey program plan which has been approved by the Administrator of EPA in each covered area which is supplied with any gasoline for which compliance is achieved on average that is produced by that refinery or imported by that importer. Such approval shall be based upon the survey program plan meeting the following criteria:

(1) The survey program shall consist of at least four surveys which shall occur during the following time periods: one survey during the period January 1 through May 31; two surveys during the period June 1 through September 15; and one survey during the period September 16 through December 31.

(2) The survey program shall meet the criteria stated in paragraph (d) of this section.

(3) In the event that any refiner or importer fails to properly carry out an approved survey program, the refiner or importer shall achieve compliance with all applicable standards on a per-gallon basis for the calendar year in which the failure occurs, and may not achieve compliance with any standard on an average basis during this calendar year. This requirement to achieve compliance per-gallon shall apply *ab initio* to the beginning of any calendar year in which the failure occurs, regardless of when during the year the failure occurs.

(c) *Compliance survey option 2.* A refiner or importer shall be deemed to have satisfied the compliance survey requirements described in paragraph (b) of this section if a comprehensive program of surveys is properly conducted in accordance with a survey program plan which has been approved by the Administrator of EPA. Such approval shall be based upon the survey program plan meeting the following criteria:

(1) The initial schedule for the conduct of surveys shall be as follows:

(i) 120 surveys shall be conducted in 1995;

(ii) 80 surveys shall be conducted in 1996;

(iii) 60 surveys shall be conducted in 1997;

(iv) 70 surveys shall be conducted in 1998 and thereafter.

(2) This initial survey schedule shall be adjusted as follows:

(i) In the event one or more ozone nonattainment areas in addition to the nine specified in § 80.70, opt into the reformulated gasoline program, the number of surveys to be conducted in the year the area or areas opt into the program and in each subsequent year shall be increased according to the following formula:

$$ANS_i = \left(\frac{V_{opt-in}}{V_{orig}} \times NS_i \right) + NS_i$$

where:

ANS_i = the adjusted number of surveys for year i; i = the opt-in year and each subsequent year

NS_i = the number of surveys according to the schedule in paragraph (c)(1) of this section in year i; i = the opt-in year and each subsequent year

V_{opt-in} = the total volume of gasoline supplied to the opt-in covered areas in the year preceding the year of the opt-in

V_{orig} = the total volume of gasoline supplied to the original nine covered areas in the year preceding the year of the opt-in

(ii) In the event that any covered area(s) fails a survey or survey series

according to the criteria set forth in paragraph (d) of this section, the annual decreases in the numbers of surveys prescribed by paragraph (c)(1) of this section, as adjusted by paragraph (c)(2)(i) of this section, shall be adjusted as follows in the year following the year of the failure. Any such adjustment to the number of surveys shall remain in effect so long as any standard for the affected covered area has been adjusted to be more stringent as a result of a failed survey or survey series. The adjustments shall be calculated according to the following formula:

$$ANS_i = \left(\frac{V_{failed}}{V_{total}} \times \left(NS_{i-1} - NS_i \right) \right) + NS_i$$

where:

ANS_i = the adjusted number of surveys in year i; i = the year after the failure and each subsequent year

V_{failed} = the total volume of gasoline supplied to the covered area which failed the survey or survey series in the year of the failure

V_{total} = the total volume of gasoline supplied to all covered areas in the year of the failure

NS_i = the number of surveys in year i according to the schedule in paragraph (c)(1) of this section and as adjusted by paragraph (c)(2)(i) of this section; i = the year after the failure and each subsequent year

(3) The survey program shall meet the criteria stated in paragraph (d) of this section.

(4) On each occasion the comprehensive survey program does not occur as specified in the approved plan with regard to any covered area:

(i) Each refiner or importer who supplied any reformulated gasoline or RBOB to the covered area and who has not satisfied the survey requirements described in paragraph (b) of this section shall be deemed to have failed to carry out an approved survey program; and

(ii) The covered area will be deemed to have failed surveys for VOC and NO_X emissions performance, and survey series for benzene and toxic and NO_X emissions performance.

(d) *General survey requirements.* (1) During the period January 1, 1995 through December 31, 1997:

(i) Any sample taken from a retail gasoline storage tank for which the three most recent deliveries were of gasoline designated as meeting:

(A) Simple model standards shall be considered a ''simple model sample''; or

(B) Complex model standards shall be considered a ''complex model sample.''

(ii) A survey shall consist of the combination of a simple model portion and a complex model portion, as follows:

(A) The simple model portion of a survey shall consist of all simple model samples that are collected pursuant to the applicable survey design in a single covered area during any consecutive seven-day period and that are not excluded under paragraph (d)(6) of this section.

(B) The complex model portion of a survey shall consist of all complex model samples that are collected pursuant to the applicable survey design in a single covered area during any consecutive seven-day period and that are not excluded under paragraph (d)(6) of this section.

(iii)(A) The simple model portion of each survey shall be representative of all gasoline certified using the simple model which is being dispensed in the covered area.

(B) The complex model portion of each survey shall be representative of all gasoline certified using the complex model which is being dispensed in the covered area.

(2) Beginning on January 1, 1998:

(i) A survey shall consist of all samples that are collected pursuant to the applicable survey design in a single covered area during any consecutive seven-day period and that are not excluded under paragraph (d)(6) of this section.

(ii) A survey shall be representative of all gasoline which is being dispensed in the covered area.

(3)(i) A VOC survey and a NO_X survey shall consist of any survey conducted during the period June 1 through September 15;

(ii) A sample of gasoline taken at a retail outlet or wholesale purchaser-consumer facility that has within the past 30 days commingled ethanol blended reformulated gasoline with non-ethanol blended reformulated gasoline in accordance with the provisions in § 80.78(a)(8) shall not be used in a VOC survey required under this section.

(4)(i) A toxics and benzene survey series shall consist of all surveys conducted in a single covered area during a single calendar year.

(ii) A NO_X survey series shall consist of all surveys conducted in a single covered area during the periods January 1 through May 31, and September 16 through December 31 during a single calendar year.

(5)(i) Each simple model sample included in a survey shall be analyzed for oxygenate type and content, benzene content, aromatic hydrocarbon content, and RVP in accordance with the methodologies specified in § 80.46; and

(ii) Each complex model sample included in a survey shall be analyzed for oxygenate type and content, olefins, benzene, sulfur, and aromatic hydrocarbons, E–200, E–300, and RVP in accordance with the methodologies specified in § 80.46.

(6)(i) The results of each survey shall be based upon the results of the analysis of each sample collected during the course of the survey, unless the sample violates the applicable per-gallon maximum or minimum standards for the parameter being evaluated plus any enforcement tolerance that applies to the parameter (*e.g.*, a sample that violates the benzene per-gallon maximum plus any benzene enforcement tolerance but meets other per-gallon maximum and minimum standards would be excluded from the benzene survey, but would be included in the surveys for parameters other than benzene).

(ii) Any sample from a survey that violates any standard under § 80.41, or that constitutes evidence of the violation of any prohibition or requirement under this subpart D, may be used by the Administrator in an enforcement action for such violation.

(7) Each laboratory at which samples in a survey are analyzed shall participate in a correlation program with EPA to ensure the validity of analysis results.

(8)(i) The results of each simple model VOC survey shall be determined as follows:

(A) For each simple model sample from the survey, the VOC emissions reduction percentage shall be determined based upon the tested values for RVP and oxygen for that sample as applied to the VOC emissions reduction equation at § 80.42(a)(1) for VOC-Control Region 1 and § 80.42(a)(2) for VOC-Control Region 2;

(B) The VOC emissions reduction survey standard applicable to each covered area shall be calculated by using the VOC emissions equation at § 80.42(a)(1) with RVP = 7.2 and OXCON = 2.0 for covered areas located in VOC-Control Region 1 and using the VOC emissions equation at § 80.42(a)(2) with RVP = 8.1 and OXCON = 2.0 for covered areas located in VOC-Control Region 2; and

(C) The covered area shall have failed the simple model VOC survey if the VOC emissions reduction average of all survey samples is less than VOC emissions reduction survey standard calculated under paragraph (d)(8)(i)(B) of this section.

(ii) The results of each complex model VOC emissions reduction survey shall be determined as follows:

(A) For each complex model sample from the survey series, the VOC emissions reduction percentage shall be determined based upon the tested parameter values for that sample and the appropriate methodology for calculating VOC emissions reduction at § 80.45;

(B) The covered area shall have failed the complex model VOC survey if the VOC emissions reduction percentage average of all survey samples is less than the applicable per-gallon standard for VOC emissions reduction;

(C) For adjusted VOC gasoline sold in the covered areas described at § 80.70(f) and (i), the covered area shall have failed the complex model VOC survey if

the VOC emissions reduction percentage average of all survey samples is less than the weighted average of the applicable per-gallon standards for VOC emissions reduction calculated according to the following formula:

$$WSTD = \frac{VOCU \times n_u + VOCA \times n_a}{n}$$

Where:

WSTD=Weighted average of the applicable per-gallon VOC standards.

VOCU=Per gallon VOC standard applicable in the covered area to RFG containing less than 10 percent ethanol by volume.

VOCA=Per gallon VOC standard applicable in the covered area to RFG containing 10 percent ethanol by volume.

n_u=Number of samples in the VOC survey with oxygen content less than 3.5 percent by weight.

n_a=Number of samples in the VOC survey with oxygen content equal to or greater than 3.5 percent by weight.

n=Total number of samples in the VOC survey.

(9)(i) The results of each simple model toxics emissions reduction survey series conducted in any covered area shall be determined as follows:

(A) For each simple model sample from the survey series, the toxics emissions reduction percentage shall be determined based upon the tested parameter values for that sample and the appropriate methodology for calculating toxics emissions performance reduction at § 80.42.

(B) The annual average of the toxics emissions reduction percentages for all samples from a survey series shall be calculated according to the following formula[2]:

$$AATER = \left(\left(\frac{\sum_{i=1}^{s_1} \left(\frac{\sum_{j=1}^{n_1} TER_{1,j}}{n_1} \right)_i}{s_1} \right) \times 0.468 \right) + \left(\left(\frac{\sum_{i=1}^{s_2} \left(\frac{\sum_{j=1}^{n_2} TER_{2,j}}{n_2} \right)_i}{s_2} \right) \times 0.532 \right)$$

Where:

AATER = the annual average toxics emissions reduction

$TER_{1,j}$ = the toxics emissions reduction for sample j of gasoline collected during the high ozone season

$TER_{2,j}$ = the toxics emissions reduction for sample j of gasoline collected outside the high ozone season

n_1 = the number of gasoline samples collected during a one-week survey conducted within the high ozone season

s_1 = the number of one-week surveys conducted within the high ozone season

n_2 = the number of gasoline samples collected during a one-week survey conducted outside the high ozone season

s_2 = the number of one-week surveys conducted outside of the high ozone season

(C) The covered area shall have failed the simple model toxics survey series if the annual average toxics emissions reduction is less than the simple model

[2] The formula requires, first, that the toxic reductions of samples taken in each one-week survey be averaged to obtain an average for each such survey. Then these survey averages are, themselves, averaged separately for high-ozone and non-high-ozone season surveys, to obtain two overall averages. These overall averages are each to be multiplied by a seasonal weight (0.468 for high-ozone season and 0.532 for non-high ozone season) and the resulting products added together to obtain the average annual toxic emission reduction.

per-gallon standard for toxics emissions reduction.

(ii) The results of each complex model toxics emissions reduction survey series conducted in any covered area shall be determined as follows:

(A) For each complex model sample from the survey series, the toxics emissions reduction percentage shall be determined based upon the tested parameter values for that sample and the appropriate methodology for calculating toxics emissions reduction at § 80.45;

(B) The annual average of the toxics emissions reduction percentages for a survey series shall be calculated according to the formula specified in paragraph (d)(9)(i)(B) of this section; and

(C) The covered area shall have failed the complex model toxics survey series if the annual average toxics emissions reduction is less than the applicable per-gallon complex model standard for toxics emissions reduction.

(10) The results of each NO_X emissions reduction survey and survey series shall be determined as follows:

(i) For each sample from the survey and survey series, the NO_X emissions reduction percentage shall be determined based upon the tested parameter values for that sample and the appropriate methodology for calculating NO_X emissions reduction at § 80.45; and

(ii) The average NO_X emission reduction percentage for each single week-long NO_X survey shall be calculated as the average of all NO_X emission reduction percentages from the survey.

(iii) The covered area shall have failed a NO_X survey if the average NO_X emissions reduction percentage for all survey samples is less than the applicable Phase I or Phase II complex model per-gallon standard for NO_X emissions reduction.

(iv) The average NO_X emission reduction percentage for a NO_X survey series shall be calculated according to the following formula:

$$ANER = \frac{\sum_{i=1}^{S}\left(\frac{\sum_{j=1}^{n} NER_j}{n}\right)_i}{S}$$

Where:

ANER = the average NO_X emission reduction percentage for a NO_X survey series,

n = the number of gasoline samples taken in the course of a week-long NO_X survey,

NER_j = the NO_X emissions reduction percentage for gasoline sample j determined according to the appropriate methodology at § 80.45, and

S = the number of week-long NO_X surveys conducted during the NO_X survey series period

(v) The covered area shall have failed a NO_X survey series if the average NO_X emissions reduction percentage for the series, as computed in paragraph (d)(10)(iv) of this section, is less than the applicable Phase I or Phase II complex model per gallon standard for NO_X emissions reduction.

(11)(i) The results of each benzene content survey series conducted in any covered area shall be determined according to the following formula:

$$AABC = \frac{\sum_{i=1}^{S}\left(\frac{\sum_{j=1}^{n} BC_j}{n}\right)_i}{S}$$

Where:

AABC = the annual average benzene content for a benzene content survey series,

n = the number of gasoline samples taken in the course of a week-long benzene content survey,

BC_j = the benzene content for gasoline sample j taken in the course of a week-long benzene content survey, and

S = the number of week-long benzene content surveys conducted during the year.

(ii) If the annual average benzene content computed in paragraph (d)(11)(i) of this section is greater than 1.000 percent by volume, the covered area shall have failed a benzene content survey series.

(12) [Reserved]

(13) Each survey program shall:

(i) Be planned and conducted by a person who is independent of the refiner or importer (the surveyor). In order to be considered independent:

(A) The surveyor shall not be an employee of any refiner or importer;

(B) The surveyor shall be free from any obligation to or interest in any refiner or importer; and

(C) The refiner or importer shall be free from any obligation to or interest in the surveyor; and

(ii) Include procedures for selecting sample collection locations, numbers of samples, and gasoline compositions which will result in:

(A) Simple model surveys representing all gasoline certified using the simple model being dispensed at retail outlets within the covered area during the period of the survey; and

(B) Complex model surveys representing all gasoline certified using the complex model being dispensed at retail outlets within the covered area during the period of the survey; and

(iii) Include procedures such that the number of samples included in each survey or survey series (whichever is applicable) assures that:

(A) In the case of simple model surveys or survey series, the average levels of oxygen, benzene, RVP, and aromatic hydrocarbons are determined with a 95% confidence level, with error of less than 0.1 psi for RVP, 0.05% for benzene (by volume), and 0.1% for oxygen (by weight); and

(B) In the case of complex model surveys or survey series, the average levels of oxygen, benzene, RVP, aromatic hydrocarbons, olefins, T–50, T–90 and sulfur are determined with a 95% confidence level, with error of less than 0.1 psi for RVP, 0.05% for benzene (by volume), 0.1% for oxygen (by weight), 0.5% for olefins (by volume), 5 °F. for T–50 and T–90, and 10 ppm for sulfur; or an equivalent level of precision for the complex model-determined emissions parameters; and

(iv) Require that the surveyor shall:

(A) Not inform anyone, in advance, of the date or location for the conduct of any survey;

(B) Upon request by EPA made within thirty days following the submission of the report of a survey, provide a duplicate of any gasoline sample taken during that survey to EPA at a location to be specified by EPA each sample to be identified by the name and address of the facility where collected, the date of collection, and the classification of the sample as simple model or complex model; and

(C) At any time permit any representative of EPA to monitor the conduct of the survey, including sample collection, transportation, storage, and analysis; and

(v) Require the surveyor to submit to EPA a report of each survey, within thirty days following completion of the survey, such report to include the following information:

(A) The identification of the person who conducted the survey;

(B) An attestation by an officer of the surveyor company that the survey was conducted in accordance with the survey plan and that the survey results are accurate;

(C) If the survey was conducted for one refiner or importer, the identification of that party;

(D) The identification of the covered area surveyed;

(E) The dates on which the survey was conducted;

(F) The address of each facility at which a gasoline sample was collected, the date of collection, and the classification of the sample as simple model or complex model;

(G) The results of the analyses of simple model samples for oxygenate type and oxygen weight percent, benzene content, aromatic hydrocarbon content, and RVP, the calculated toxics emission reduction percentage, and for each survey conducted during the period June 1 through September 15 the VOC emissions reduction percentage calculated using the methodology specified in paragraph (d)(8)(i) of this section;

(H) The results of the analyses of complex model samples for oxygenate type and oxygen weight percent, benzene, aromatic hydrocarbon, and olefin content, E–200, E–300, and RVP, the calculated NO_X and toxics emissions reduction percentage, and for each survey conducted during the period June 1 through September 15, the calculated VOC emissions reduction percentage;

(I) The name and address of each laboratory where gasoline samples were analyzed;

(J) A description of the methodology utilized to select the locations for sample collection and the numbers of samples collected;

(K) For any samples which were excluded from the survey, a justification for such exclusion; and

(L) The average toxics emissions reduction percentage for simple model samples and the percentage for complex model samples, the average benzene percentage, and for each survey conducted during the period June 1 through September 15, the average VOC emissions reduction percentage for simple model samples and the percentage for complex model samples, and the average NO_X emissions reduction percentage for all complex model samples;

(14) Each survey shall be conducted at a time and in a covered area selected by EPA no earlier than two weeks before the date of the survey.

(15) The procedure for seeking EPA approval for a survey program plan shall be as follows:

(i) The survey program plan shall be submitted to the Administrator of EPA for EPA's approval no later than September 1 of the year preceding the year in which the surveys will be conducted; and

(ii) Such submittal shall be signed by a responsible corporate officer of the refiner, importer, or oxygenate blender, or in the case of a comprehensive survey program plan, by an officer of the organization coordinating the survey program.

(16)(i) No later than December 1 of the year preceding the year in which the surveys will be conducted, the contract with the surveyor to carry out the entire survey plan shall be in effect, and an amount of money necessary to carry out the entire survey plan shall be paid to the surveyor or placed into an escrow account with instructions to the escrow agent to pay the money over to the surveyor during the course of the conduct of the survey plan.

(ii) No later than December 15 of the year preceding the year in which the surveys will be conducted, the Administrator of EPA shall be given a copy of the contract with the surveyor, proof that the money necessary to carry out the plan has either been paid to the surveyor or placed into an escrow account, and if placed into an escrow account, a copy of the escrow agreement.

[59 FR 7813, Feb. 16, 1994, as amended at 59 FR 36963, July 20, 1994; 62 FR 12576, Mar. 17, 1997; 62 FR 68207, Dec. 31, 1997; 66 FR 37165, July 17, 2001; 71 FR 74568, Dec. 15, 2005; 71 FR 26699, May 8, 2006; 72 FR 8543, Feb. 26, 2007]

§ 80.69 Requirements for downstream oxygenate blending.

The requirements of this section apply to all reformulated gasoline blendstock for oxygenate blending, or RBOB, to which oxygenate is added at any oxygenate blending facility, except that paragraph (a)(7) of this section does not apply to adjusted VOC gasoline as defined in § 80.40(c).

(a) *Requirements for refiners and importers.* For any RBOB produced or imported, the refiner or importer of the RBOB shall:

(1) Produce or import the RBOB such that, when blended with a specified type and percentage of oxygenate, it meets the applicable standards for reformulated gasoline;

(2) In order to determine the properties of RBOB for purposes of calculating compliance with per-gallon or averaged standards, conduct tests on each batch of the RBOB by:

(i) Adding the specified type and amount of oxygenate to a representative sample of the RBOB; and

(ii) Determining the properties and characteristics of the resulting gasoline using the methodology specified in § 80.65(e);

(3) Carry out the independent analysis requirements specified in § 80.65(f);

(4) [Reserved]

(5) Transfer ownership of the RBOB only to an oxygenate blender who is registered with EPA as such, or to an intermediate owner with the restriction that it only be transferred to a registered oxygenate blender;

(6) Have a contract with each oxygenate blender who receives any RBOB produced or imported by the refiner or importer that requires the oxygenate blender, or, in the case of a contract

with an intermediate owner, that requires the intermediate owner to require the oxygenate blender to:

(i) Comply with blender procedures that are specified by the contract and are calculated to assure blending with the proper type and amount of oxygenate;

(ii) Allow the refiner or importer to conduct the quality assurance sampling and testing required under this paragraph (a); and

(iii) Stop selling any gasoline found not to comply with the standards under which the RBOB was produced or imported.

(7) Conduct a quality assurance sampling and testing program to be carried out at the facilities of each oxygenate blender who blends any RBOB produced or imported by the refiner or importer with any oxygenate, to determine whether the reformulated gasoline which has been produced through blending complies with the applicable standards, using the methodology specified in § 80.46 for this determination.

(i) The sampling and testing program shall be conducted as follows:

(A) All samples shall be collected subsequent to the addition of oxygenate, and either:

(*1*) Prior combining the resulting gasoline with any other gasoline; or

(*2*) In the case of truck splash blending, subsequent to the delivery of the gasoline to a retail outlet or wholesale purchaser-consumer facility provided that the three most recent deliveries to the retail outlet or wholesale purchaser facility were of gasoline produced using that refiner's or importer's RBOB, and provided that any discrepancy found through the retail outlet or wholesale purchaser facility sampling is followed-up with measures reasonably designed to discover the cause of the discrepancy; and

(B) Sampling and testing shall be at one of the following rates:

(*1*) In the case of RBOB which is blended with oxygenate in a gasoline storage tank, a rate of not less than one sample for every 400,000 barrels of RBOB produced or imported by that refiner or importer that is blended by that blender, or one sample every month, whichever is more frequent; or

(*2*) In the case of RBOB which is blended with oxygenate in gasoline delivery trucks through the use of computer-controlled in-line blending equipment, a rate of not less than one sample for every 200,000 barrels of RBOB produced or imported by that refiner or importer that is blended by that blender, or one sample every three months, whichever is more frequent; or

(*3*) In the case of RBOB which is blended with oxygenate in gasoline delivery trucks without the use of computer-controlled in-line blending equipment, a rate of not less than one sample for each 50,000 barrels of RBOB produced or imported by that refiner or importer which is blended, or one sample per month, whichever is more frequent;

(ii) In the event the test results for any sample indicate the gasoline does not comply with applicable standards (within the correlation ranges specified in § 80.65(e)(2)(i)), the refiner or importer shall:

(A) Immediately take steps to stop the sale of the gasoline that was sampled;

(B) Take steps which are reasonably calculated to determine the cause of the noncompliance and to prevent future instances of noncompliance;

(C) Increase the rate of sampling and testing to one of the following rates:

(*1*) In the case of RBOB which is blended with oxygenate in a gasoline storage tank, a rate of not less than one sample for every 200,000 barrels of RBOB produced or imported by that refiner or importer that is blended by that blender, or one sample every two weeks, whichever is more frequent; or

(*2*) In the case of RBOB which is blended with oxygenate in gasoline delivery trucks through the use of computer-controlled in-line blending equipment, a rate of not less than one sample for every 100,000 barrels of RBOB produced or imported by that refiner or importer that is blended by that blender, or one sample every two months, whichever is more frequent; or

(*3*) In the case of RBOB which is blended with oxygenate in gasoline delivery trucks without the use of computer-controlled in-line blending equipment, a rate of not less than one sample for each 25,000 barrels of RBOB produced or imported by that refiner or importer which is blended, or one sample every two weeks, whichever is more frequent;

(D) Continue the increased frequency of sampling and testing until the results of ten consecutive samples and tests indicate the gasoline complies with applicable standards, at which time the sampling and testing may be conducted at the original frequency;

(iii) This quality assurance program is in addition to any quality assurance requirements carried out by other parties;

(8)–(9) [Reserved]

(10) Specify in the product transfer documentation for the RBOB each oxygenate type or types and amount or range of amounts which, if blended with the RBOB will result in reformulated gasoline which:

(i) Has VOC, toxics, or NO_X emissions reduction percentages which are no lower than the percentages that formed the basis for the refiner's or importer's compliance determination for these parameters;

(ii) Has a benzene content and RVP level which are no higher than the values for these characteristics that formed the basis for the refiner's or importer's compliance determinations for these parameters; and

(iii) Will not cause the reformulated gasoline to violate any standard specified in § 80.41.

(11) Any refiner or importer who produces or imports RBOB may comply with the following alternative quality assurance requirement instead of the contract and quality assurance sampling and testing requirements in paragraphs (a)(6) and (a)(7) of this section:

(i) To comply with the alternative quality assurance requirement under this paragraph (a)(11), a refiner or importer must either arrange to have an independent surveyor conduct a comprehensive program of annual compliance surveys, or participate in the funding of an organization which arranges to have an independent surveyor conduct a comprehensive program of annual compliance surveys, to be carried out in accordance with a survey plan which has been approved by EPA.

(ii) The annual compliance surveys under this paragraph (a)(11) shall be:

(A) Planned and conducted by an independent surveyor that meets the requirements in § 80.68(c)(13)(i);

(B) Conducted at retail gasoline outlets in a specified reformulated gasoline covered area;

(C) Representative of all reformulated gasoline being dispensed in the specified reformulated gasoline covered area; and

(D) Designed to achieve at least the same level of quality assurance required under paragraph (a)(7) of this section.

(iii) The compliance survey program shall require the independent surveyor conducting the surveys to:

(A) Obtain gasoline samples in accordance with the survey plan approved under this paragraph (a)(11), or immediately notify EPA of any refusal of retail outlets to allow samples to be taken;

(B) Test or arrange for the samples to be tested for type and amount of oxygenate;

(C)(*1*) Obtain the product transfer documents associated with the gasoline sample from the retail outlet; or immediately notify EPA of any refusal of any party to provide product transfer documents that should be within their possession; and

(*2*) Immediately notify EPA of any case where the product transfer documents obtained from the retail outlet do not contain the information required in paragraph (a)(11)(vii)(A) of this section, or any case where the gasoline does not contain the type and/or minimum amount of oxygenate stated on the product transfer documents;

(D) Where the test results indicate that the gasoline does not contain the type and/or minimum amount of oxygenate stated on the product transfer documents:

(*1*) Determine the oxygenate blending facility that supplied the gasoline; and

(*2*) Obtain from the oxygenate blender documentation of the refiner's or

importer's oxygenate blending instructions for the gasoline;

(E) Immediately notify EPA of any case where the test results obtained by the independent surveyor indicate that the gasoline does not contain the type and/or minimum amount of oxygenate designated for the RBOB in the refiner's or importer's blending instructions;

(F) Immediately notify EPA of any instances where a refiner, importer, terminal, distributor, carrier or retail outlet fails to cooperate in the manner described in paragraph (a)(11)(vi) of this section.

(G) Submit to EPA a report of each survey, within thirty days following completion of the survey, such report to include the following information:

(*1*) The identification of the person who conducted the survey;

(*2*) An attestation by an officer of the surveyor company that the survey was conducted in accordance with the survey plan and that the survey results are accurate;

(*3*) Identification of the party(ies) for whom the survey was conducted;

(*4*) The identification of the covered area surveyed;

(*5*) The dates on which the survey was conducted;

(*6*) The address of each facility at which a gasoline sample was collected and the date of collection;

(*7*) The results of the analyses of the samples for type and amount of oxygenate;

(*8*) The name and address of each laboratory where the gasoline samples were analyzed;

(*9*) A description of the methodology utilized to select the locations for sample collection and the number of samples collected; and

(*10*) For any samples excluded from the survey, a justification for such exclusion.

(H) Maintain all records relating to the surveys conducted under this paragraph (a)(11) for a period of at least 5 years; and

(I) At any time permit any representative of EPA to monitor the conduct of the surveys, including sample collection, transportation, storage, and analysis.

(iv) A survey plan under this paragraph (a)(11) must include:

(A) Identification of the party(ies) for whom the survey is to be conducted;

(B) Identification of the independent surveyor;

(C) A methodology for determining:

(*1*) When the samples will be collected;

(*2*) The sample collection locations; and

(*3*) The number of samples to be collected during the annual compliance period;

(D) A process for notifying oxygenate blenders and other downstream parties in the affected RFG area of the product transfer documentation requirements in paragraph (a)(11)(vii)(A) of this section; and

(E) Any other elements determined by EPA to be necessary to achieve the level of quality assurance required under paragraph (a)(11)(ii)(D) of this section.

(v) Any sampling and testing pursuant to a survey plan under this paragraph (a)(11) must be conducted in a manner consistent with the applicable provisions of §§ 80.8 and 80.46.

(vi)(A) Each refiner and importer who participates in the alternative quality assurance program under this paragraph (a)(11) must take all reasonable steps to ensure that each oxygenate blender, distributor, carrier and retail outlet cooperates in this program by allowing the independent surveyor to collect samples and by providing to the independent surveyor and/or EPA, upon request, copies of product transfer documents and other records or information regarding the source of any gasoline received, the destination of any gasoline distributed, the oxygenate blending instructions for the RBOB, and the rate (volume %) that oxygenate was blended into the gasoline.

(B) Reasonable steps under paragraph (a)(11)(vii) of this section must include, but typically should not be limited to, contractual agreements with any branded facilities of the refiner or importer, including any terminals, distributors, carriers and retail outlets, which require the branded facility to

cooperate with the independent surveyor and/or EPA in the manner described in paragraph (a)(11)(vii)(A) of this section.

(vii)(A) Any terminal that blends oxygenate with RBOB which is produced or imported by any refiner or importer that complies with the alternative quality assurance requirement under this paragraph (a)(11), and any parties downstream from such oxygenate blending terminal, must include on product transfer documents information regarding the type and amount of oxygenate contained in the gasoline and identification of the oxygenate blending facility that blended the gasoline.

(B) If a party downstream from a refiner or importer that complies with the alternative quality assurance requirement under this paragraph (a)(11) fails to receive notice of the requirements in paragraph (a)(11)(vii)(A) of this section, upon notification from EPA, the party must thereafter comply with the requirements in paragraph (a)(11)(vii)(A) of this section.

(viii) The procedure for obtaining EPA approval of a survey plan under this paragraph (a)(11), and for revocation of any such approval, are as follows:

(A) A detailed survey plan which complies with the requirements of this paragraph (a)(11) must be submitted to EPA, no later than September 1 of the year preceding the calendar year in which the surveys will be conducted;

(B) The survey plan must be signed by a responsible corporate officer of the refiner or importer, or responsible officer of the organization which arranges to have an independent surveyor conduct a program of compliance surveys, as applicable; and

(C) The survey plan must be sent to the following address: Director, Transportation and Regional Programs Division, U.S. Environmental Protection Agency, 1200 Pennsylvania Ave., NW., (6406J), Washington, DC 20460;

(D) EPA will send a letter to the party submitting a survey plan under this section, either approving or disapproving the survey plan;

(E) EPA may revoke any approval of a survey plan under this section for cause, including an EPA determination that the approved survey plan has proved to be inadequate in practice or that it was not diligently implemented;

(F) The approving official for an alternative quality assurance program under this section is the Director of the Transportation and Regional Programs Division, Office of Transportation and Air Quality.

(G) Any notifications required under this paragraph (a)(11) must be directed to the official designated in paragraph (a)(11)(viii)(F) of this section.

(ix)(A) No later than December 1 of the year preceding the year in which the surveys will be conducted, the contract with the independent surveyor shall be in effect, and an amount of money necessary to carry out the entire survey plan shall be paid to the independent surveyor or placed into an escrow account with instructions to the escrow agent to pay the money to the independent surveyor during the course of the conduct of the survey plan;

(B) No later than December 15 of the year preceding the year in which the surveys will be conducted, EPA must receive a copy of the contract with the independent surveyor, proof that the money necessary to carry out the survey plan has either been paid to the independent surveyor or placed into an escrow account, and, if placed into an escrow account, a copy of the escrow agreement, to be sent to the official designated in paragraph (a)(11)(viii)(F) of this section.

(x) A failure of any refiner or importer to fulfill or cause to be fulfilled any of the requirements of this paragraph (a)(11) will cause the option to use the alternative quality assurance requirements under this paragraph (a)(11) to be void *ab initio*.

(b) *Requirements for oxygenate blenders*. For all RBOB received by any oxygenate blender, the oxygenate blender shall:

(1) Add oxygenate of the type(s) and amount (or within the range of amounts) specified in the product transfer documents for the RBOB; and

(2) Meet the recordkeeping requirements specified in § 80.74.

(c) [Reserved]

(d) *Requirements for distributors dispensing RBOB into trucks for blending*.

Any distributor who dispenses any RBOB into any truck which delivers gasoline to retail outlets or wholesale purchase-consumer facilities, shall for such RBOB so dispensed:

(1) Transfer the RBOB only to an oxygenate blender who has registered with the Administrator or EPA as such; and

(2) Obtain from the oxygenate blender the oxygenate blender's EPA registration number.

(e) *Additional requirements for oxygenate blenders who blend oxygenate in trucks.* Any oxygenate blender who obtains any RBOB in any gasoline delivery truck shall on each occasion it obtains RBOB from a distributor, supply the distributor with the oxygenate blender's EPA registration number.

[59 FR 7813, Feb. 16, 1994, as amended at 59 FR 36964, July 20, 1994; 62 FR 60135, Nov. 6, 1997; 66 FR 37165, July 17, 2001; 71 FR 74569, Dec. 15, 2005; 71 FR 26700, May 8, 2006; 71 FR 31959, June 2, 2006]

§ 80.70 Covered areas.

For purposes of subparts D, E, and F of this part, the covered areas are as follows:

(a) The Los Angeles-Anaheim-Riverside, California, area, comprised of:

(1) Los Angeles County;

(2) Orange County;

(3) Ventura County;

(4) That portion of San Bernadino County that lies south of latitude 35 degrees, 10 minutes north and west of longitude 115 degrees, 45 minutes west; and

(5) That portion of Riverside County, which lies to the west of a line described as follows:

(i) Beginning at the northeast corner of Section 4, Township 2 South, Range 5 East, a point on the boundary line common to Riverside and San Bernadino Counties;

(ii) Then southerly along section lines to the centerline of the Colorado River Aqueduct;

(iii) Then southeasterly along the centerline of said Colorado River Aqueduct to the southerly line of Section 36, Township 3 South, Range 7 East;

(iv) Then easterly along the township line to the northeast corner of Section 6, Township 4 South, Range 9 East;

(v) Then southerly along the easterly line of Section 6 to the southeast corner thereof;

(vi) Then easterly along section lines to the northeast corner of Section 10, Township 4 South, Range 9 East;

(vii) Then southerly along section lines to the southeast corner of Section 15, Township 4 South, Range 9 East;

(viii) Then easterly along the section lines to the northeast corner of Section 21, Township 4 South, Range 10 East;

(ix) Then southerly along the easterly line of Section 21 to the southeast corner thereof;

(x) Then easterly along the northerly line of Section 27 to the northeast corner thereof;

(xi) Then southerly along section lines to the southeast corner of Section 34, Township 4 South, Range 10 East;

(xii) Then easterly along the township line to the northeast corner of Section 2, Township 5 South, Range 10 East;

(xiii) Then southerly along the easterly line of Section 2, to the southeast corner thereof;

(xiv) Then easterly along the northerly line of Section 12 to the northeast corner thereof;

(xv) Then southerly along the range line to the southwest corner of Section 18, Township 5 South, Range 11 East;

(xvi) Then easterly along section lines to the northeast corner of Section 24, Township 5 South, Range 11 East; and

(xvii) Then southerly along the range line to the southeast corner of Section 36, Township 8 South, Range 11 East, a point on the boundary line common to Riverside and San Diego Counties.

(b) San Diego County, California.

(c) The Greater Connecticut area, comprised of:

(1) The following Connecticut counties:

(i) Hartford;

(ii) Middlesex;

(iii) New Haven;

(iv) New London;

(v) Tolland;

(vi) Windham; and

(2) Portions of certain Connecticut counties, described as follows:

(i) In Fairfield County, the City of Shelton; and

(ii) In Litchfield County, all cities and townships except the towns of Bridgewater and New Milford.

(d) The New York-Northern New Jersey-Long Island-Connecticut area, comprised of:

(1) Portions of certain Connecticut counties, described as follows:

(i) In Fairfield County, all cities and townships except Shelton City;

(ii) In Litchfield County, the towns of Bridgewater and New Milford;

(2) The following New Jersey counties:

(i) Bergen;

(ii) Essex;

(iii) Hudson;

(iv) Hunterdon;

(v) Middlesex;

(vi) Monmouth;

(vii) Morris;

(viii) Ocean;

(ix) Passaic;

(x) Somerset;

(xi) Sussex;

(xii) Union; and

(3) The following New York counties:

(i) Bronx;

(ii) Kings;

(iii) Nassau;

(iv) New York (Manhattan);

(v) Queens;

(vi) Richmond;

(vii) Rockland;

(viii) Suffolk;

(ix) Westchester;

(x) Orange; and

(xi) Putnam.

(e) The Philadelphia-Wilmington-Trenton area, comprised of:

(1) The following Delaware counties:

(i) New Castle; and

(ii) Kent;

(2) Cecil County, Maryland;

(3) The following New Jersey counties:

(i) Burlington;

(ii) Camden;

(iii) Cumberland;

(iv) Gloucester;

(v) Mercer;

(vi) Salem; and

(4) The following Pennsylvania counties:

(i) Bucks;

(ii) Chester;

(iii) Delaware;

(iv) Montgomery; and

(v) Philadelphia.

(f) The Chicago-Gary-Lake County, Illinois-Indiana-Wisconsin area, comprised of:

(1) The following Illinois counties:

(i) Cook;

(ii) Du Page;

(iii) Kane;

(iv) Lake;

(v) McHenry;

(vi) Will;

(2) Portions of certain Illinois counties, described as follows:

(i) In Grundy County, the townships of Aux Sable and Goose Lake; and

(ii) In Kendall County, Oswego township; and

(3) The following Indiana counties:

(i) Lake; and

(ii) Porter.

(g) The Baltimore, Maryland area, comprised of:

(1) The following Maryland counties:

(i) Anne Arundel;

(ii) Baltimore;

(iii) Carroll;

(iv) Harford;

(v) Howard; and

(2) The City of Baltimore.

(h) The Houston-Galveston-Brazoria, Texas area, comprised of the following Texas counties:

(1) Brazoria;

(2) Fort Bend;

(3) Galveston;

(4) Harris;

(5) Liberty;

(6) Montgomery;

(7) Waller; and

(8) Chambers.

(i) The Milwaukee-Racine, Wisconsin area, comprised of the following Wisconsin counties:

(1) Kenosha;

(2) Milwaukee;

(3) Ozaukee;

(4) Racine;

(5) Washington; and

(6) Waukesha.

(j) Any other area classified under 40 CFR part 81, subpart C as a marginal, moderate, serious, or severe ozone nonattainment area may be included as a covered area on petition of the Governor of the State in which the area is located. The ozone nonattainment areas listed in this paragraph (j) opted into the reformulated gasoline program prior to the start of the reformulated gasoline program. These areas

are covered areas for purposes of subparts D, E, and F of this part. The geographic extent of each covered area listed in this paragraph (j) shall be the nonattainment area boundaries as specified in 40 CFR part 81, subpart C.

(1) Sussex County, Delaware;

(2) District of Columbia portion of the Washington ozone nonattainment area;

(3) The following Kentucky counties:

(i) Boone;

(ii) Campbell;

(iii) Jefferson; and

(iv) Kenton;

(4) Portions of the following Kentucky counties:

(i) Portion of Bullitt County described as follows:

(A) Beginning at the intersection of Ky 1020 and the Jefferson-Bullitt County Line proceeding to the east along the county line to the intersection of county road 567 and the Jefferson-Bullitt County Line;

(B) Proceeding south on county road 567 to the junction with Ky 1116 (also known as Zoneton Road);

(C) Proceeding to the south on KY 1116 to the junction with Hebron Lane;

(D) Proceeding to the south on Hebron Lane to Cedar Creek;

(E) Proceeding south on Cedar Creek to the confluence of Floyds Fork turning southeast along a creek that meets Ky 44 at Stallings Cemetery;

(F) Proceeding west along Ky 44 to the eastern most point in the Shepherdsville city limits;

(G) Proceeding south along the Shepherdsville city limits to the Salt River and west to a point across the river from Mooney Lane;

(H) Proceeding south along Mooney Lane to the junction of Ky 480;

(I) Proceeding west on Ky 480 to the junction with Ky 2237;

(J) Proceeding south on Ky 2237 to the junction with Ky 61 and proceeding north on Ky 61 to the junction with Ky 1494;

(K) Proceeding south on Ky 1494 to the junction with the perimeter of the Fort Knox Military Reservation;

(L) Proceeding north along the military reservation perimeter to Castleman Branch Road;

(M) Proceeding north on Castleman Branch Road to Ky 44;

(N) Proceeding a very short distance west on Ky 44 to a junction with Ky 1020; and

(O) Proceeding north on Ky 1020 to the beginning.

(ii) Portion of Oldham County described as follows:

(A) Beginning at the intersection of the Oldham-Jefferson County Line with the southbound lane of Interstate 71;

(B) Proceeding to the northeast along the southbound lane of Interstate 71 to the intersection of Ky 329 and the southbound lane of Interstate 71;

(C) Proceeding to the northwest on Ky 329 to the intersection of Zaring Road on Ky 329;

(D) Proceeding to the east-northeast on Zaring Road to the junction of Cedar Point Road and Zaring Road;

(E) Proceeding to the north-northeast on Cedar Point Road to the junction of Ky 393 and Cedar Point Road;

(F) Proceeding to the south-southeast on Ky 393 to the junction of county road 746 (the road on the north side of Reformatory Lake and the Reformatory);

(G) Proceeding to the east-northeast on county road 746 to the junction with Dawkins Lane (also known as Saddlers Mill Road) and county road 746;

(H) Proceeding to follow an electric power line east-northeast across from the junction of county road 746 and Dawkins Lane to the east-northeast across Ky 53 on to the La Grange Water Filtration Plant;

(I) Proceeding on to the east-southeast along the power line then south across Fort Pickens Road to a power substation on Ky 146;

(J) Proceeding along the power line south across Ky 146 and the Seaboard System Railroad track to adjoin the incorporated city limits of La Grange;

(K) Then proceeding east then south along the La Grange city limits to a point abutting the north side of Ky 712;

(L) Proceeding east-southeast on Ky 712 to the junction of Massie School Road and Ky 712;

(M) Proceeding to the south-southwest and then north-northwest on Massie School Road to the junction of Ky 53 and Massie School Road;

(N) Proceeding on Ky 53 to the north-northwest to the junction of Moody Lane and Ky 53;

(O) Proceeding on Moody Lane to the south-southwest until meeting the city limits of La Grange;

(P) Then briefly proceeding north following the La Grange city limits to the intersection of the northbound lane of Interstate 71 and the La Grange city limits;

(Q) Proceeding southwest on the northbound lane of Interstate 71 until intersecting with the North Fork of Currys Fork;

(R) Proceeding south-southwest beyond the confluence of Currys Fork to the south-southwest beyond the confluence of Floyds Fork continuing on to the Oldham-Jefferson County Line; and

(S) Proceeding northwest along the Oldham-Jefferson County Line to the beginning.

(5) [Reserved]

(6) The following Maryland counties:

(i) Calvert;

(ii) Charles;

(iii) Frederick;

(iv) Montgomery;

(v) Prince Georges;

(vi) Queen Anne's; and

(vii) Kent;

(7) The entire State of Massachusetts;

(8) The following New Hampshire counties:

(i) Strafford;

(ii) Merrimack;

(iii) Hillsborough; and

(iv) Rockingham;

(9) The following New Jersey counties:

(i) Atlantic;

(ii) Cape May; and

(iii) Warren;

(10) The following New York counties:

(i) Dutchess;

(ii) The portion of Essex County that consists of the portion of Whiteface Mountain above 4,500 feet in elevation.

(11) The entire State of Rhode Island;

(12) The following Texas counties: and

(i) Collin;

(ii) Dallas;

(iii) Denton; and

(iv) Tarrant;

(13) The following Virginia areas:

(i) Alexandria;

(ii) Arlington County;

(iii) Fairfax;

(iv) Fairfax County;

(v) Falls Church;

(vi) Loudoun County;

(vii) Manassas;

(viii) Manassas Park;

(ix) Prince William County;

(x) Stafford County;

(xi) Charles City County;

(xii) Chesterfield County;

(xiii) Colonial Heights;

(xiv) Hanover County;

(xv) Henrico County;

(xvi) Hopewell;

(xvii) Richmond;

(xviii) Chesapeake;

(xix) Hampton;

(xx) James City County;

(xxi) Newport News;

(xxii) Norfolk;

(xxiii) Poquoson;

(xxiv) Portsmouth;

(xxv) Suffolk;

(xxvi) Virginia Beach;

(xxvii) Williamsburg; and

(xxviii) York County.

(k) The ozone nonattainment areas included in this paragraph (k) have opted into the reformulated gasoline program since the beginning of the program, and are covered areas for purposes of subparts D, E, and F of this part. The geographic extent of each covered area listed in this paragraph (k) shall be the nonattainment area boundaries as specified in 40 CFR part 81, subpart C.

(1) The St. Louis, Missouri, ozone nonattainment area is a covered area beginning June 1, 1999. The prohibitions of section 211(k)(5) of the Clean Air Act apply to all persons in the St. Louis, Missouri, covered area, other than retailers and wholesale purchaser-consumers, beginning May 1, 1999. The prohibitions of section 211(k)(5) of the Clean Air Act apply to retailers and wholesale purchase-consumers in the St. Louis, Missouri, area beginning June 1, 1999.

(2) The Illinois portion of the St. Louis, Illinois-Missouri ozone nonattainment area is a covered area beginning on July 1, 2007. The prohibitions of section 211(k)(5) of the Clean Air Act apply to all persons other than

retailers and wholesale purchaser-consumers in the Illinois portion of the St. Louis, Illinois-Missouri ozone nonattainment area beginning on June 1, 2007. The prohibitions of section 211(k)(5) of the Clean Air Act apply to retailers and wholesale purchaser-consumers in the Illinois portion of the St. Louis, Illinois-Missouri ozone nonattainment area beginning July 1, 2007.

(l) Upon the effective date for removal of any opt-in area or portion of an opt-in area included in an approved petition under § 80.72(a), the geographic area covered by such approval shall no longer be considered a covered area for purposes of subparts D, E, and F of this part.

(m) Effective one year after an area has been reclassified as a Severe ozone nonattainment area under section 181(b) of the Clean Air Act, such Severe area shall also be a covered area under the reformulated gasoline program. The ozone nonattainment areas identified pursuant to this paragraph (m) were reclassified as Severe ozone nonattainment areas, and are covered areas for purposes of subparts D, E, and F of this part. The geographic extent of each covered area identified pursuant to this paragraph (m) shall be the nonattainment area boundaries as specified in 40 CFR part 81, subpart C.

(1) An area identified as a covered area pursuant to this paragraph (m), whose classification as a severe nonattainment area under the 1-hour ozone NAAQS is removed as a result of removal of the 1-hour ozone NAAQS, remains a covered area as follows:

(i) Prior to redesignation as attainment for the 8-hour ozone NAAQS the area remains a covered area;

(ii) After redesignation as attainment for the 8-hour ozone NAAQS. [Reserved]

(2) An area identified as a covered area pursuant to this paragraph (m), whose classification as a severe nonattainment area under the 1-hour ozone NAAQS is removed as a result of redesignation to attainment for the 1-hour ozone NAAQS, remains a covered area as follows: [Reserved]

[59 FR 7813, Feb. 16, 1994, as amended at 59 FR 36964, July 20, 1994; 60 FR 2699, Jan 11, 1995; 60 FR 35491, July 10, 1995; 61 FR 35680, July 8, 1996; 62 FR 30270, June 3, 1997; 63 FR 43049, Aug. 11, 1998; 63 FR 52104, Sept. 29, 1998; 64 FR 10371, Mar. 3, 1999; 67 FR 38403, June 4, 2002; 70 FR 71705, Nov. 29, 2005; 72 FR 20242, Apr. 24, 2007]

§ 80.71 Descriptions of VOC-control regions.

(a) Reformulated gasoline covered areas which are located in the following States are included in VOC-Control Region 1:

Alabama	Mississippi
Arizona	Missouri
Arkansas	Nevada
California	New Mexico
Colorado	North Carolina
District of Columbia	Oklahoma
Florida	Oregon
Georgia	South Carolina
Kansas	Tennessee
Louisiana	Texas
Maryland	Utah
	Virginia

(b) Reformulated gasoline covered areas which are located in the following States are included in VOC-Control Region 2:

Connecticut	New Hampshire
Delaware	New Jersey
Idaho	New York
Illinois	North Dakota
Indiana	Ohio
Iowa	Pennsylvania
Kentucky	Rhode Island
Maine	South Dakota
Massachusetts	Vermont
Michigan	Washington
Minnesota	West Virginia
Montana	Wisconsin
Nebraska	Wyoming

(c) Reformulated gasoline covered areas which are partially in VOC Control Region 1 and partially in VOC Control Region 2 shall be included in VOC Control Region 1, except in the case of the Philadelphia-Wilmington-Trenton CMSA which shall be included in VOC Control Region 2.

§ 80.72 Procedures for opting out of the covered areas.

(a) In accordance with paragraph (b) of this section, the Administrator may approve a petition from a state asking

for removal of any opt-in area, or portion of an opt-in area, from inclusion as a covered area under § 80.70. If the Administrator approves a petition, he or she shall set an effective date as provided in paragraph (c) of this section. The Administrator shall notify the state in writing of the Agency's action on the petition and the effective date of the removal when the petition is approved.

(b) To be approved under paragraph (a) of this section, a petition must be signed by the Governor of a State, or his or her authorized representative, and must include the following:

(1) A geographic description of each opt-in area, or portion of each opt-in area, which is covered by the petition;

(2) A description of all ways in which reformulated gasoline is relied upon as a control measure in any approved State or local implementation plan or plan revision, or in any submission to the Agency containing any proposed plan or plan revision (and any associated request for redesignation) that is pending before the Agency when the petition is submitted; and

(3) For any opt-in areas covered by the petition for which reformulated gasoline is relied upon as a control measure as described under paragraph (b)(2) of this section, the petition shall include the following information:

(i) Identify whether the State is withdrawing any such pending plan submission;

(ii)(A) Identify whether the State intends to submit a revision to any such approved plan provision or pending plan submission that does not rely on reformulated gasoline as a control measure, and describe the alternative air quality measures, if any, that the State plans to use to replace reformulated gasoline as a control measure;

(B) A description of the current status of any proposed revision to any such approved plan provision or pending plan submission, as well as a projected schedule for submission of such proposed revision;

(iii) If the State is not withdrawing any such pending plan submission and does not intend to submit a revision to any such approved plan provision or pending plan submission, describe why no revision is necessary;

(iv) If reformulated gasoline is relied upon in any pending plan submission, other than as a contingency measure consisting of a future opt-in, and the Agency has found such pending plan submission complete or made a protectiveness finding under 40 CFR 51.448 and 93.128, demonstrate whether the removal of the reformulated gasoline program will affect the completeness and/or protectiveness determinations;

(4) The Governor of a State, or his or her authorized representative, shall submit additional information upon request of the Administrator,

(c)(1) For opt-out petitions received on or before December 31, 1997, except as provided in paragraphs (c)(2) and (c)(3) of this section, the Administrator shall set an effective date for removal of an area under paragraph (a) of this section as requested by the Governor, but no less than 90 days from the Agency's written notification to the state approving the opt-out petition, and no later than December 31, 1999.

(2) For opt-out petitions received on or before December 31, 1997, except as provided in paragraph (c)(3) of this section, where RFG is contained as an element of any plan or plan revision that has been approved by the Agency, other than as a contingency measure consisting of a future opt-in, then the effective date under paragraph (a) of this section shall be the date requested by the Governor, but no less than 90 days from the effective date of Agency approval of a revision to the plan that removes RFG as a control measure.

(3)(i) The Administrator may extend the deadline for submitting opt-out petitions in paragraphs (c)(1) and (2) of this section for a state if:

(A) The Governor or his authorized representative requests an extension prior to December 31, 1997;

(B) The request indicates that there is active or pending legislation before the state legislature that was introduced prior to March 28, 1997;

(C) The legislation is concerning opting out of or remaining in the reformulated gasoline program; and

(D) The request demonstrates that the legislation cannot reasonably be acted upon prior to December 31, 1997.

(ii) The Administrator may extend the deadline until no later than May

31, 1998. If the deadline is extended, then opt-out requests from that state received during the extension shall be considered under the provisions of paragraphs (c)(1) and (2) of this section.

(4) For opt-out petitions received January 1, 1998 through December 31, 2003, except as provided in paragraph (c)(5) of this section, the Administrator shall set an effective date for removal of an area under paragraph (a) of this section as requested by the Governor but no earlier than January 1, 2004 or 90 days from the Agency's written notification to the state approving the opt-out petition, whichever date is later.

(5) For opt-out petitions received January 1, 1998 through December 31, 2003, where RFG is contained as an element of any plan or plan revision that has been approved by the Agency, other than as a contingency measure consisting of a future opt-in, then the effective date for removal of an area under paragraph (a) of this section shall be the date requested by the Governor, but no earlier than January 1, 2004, or 90 days from the effective date of Agency approval of a revision to the plan that removes RFG as a control measure, whichever date is later.

(6) For opt-out petitions received on or after January 1, 2004, except as provided in paragraph (c)(7) of this section, the Administrator shall set an effective date for removal of an area as requested by the Governor, but no less than 90 days from the Agency's written notification to the state approving the opt-out petition.

(7) For opt-out petitions received on or after January 1, 2004, where RFG is contained as an element of any plan or plan revision that has been approved by the Agency, other than as a contingency measure consisting of a future opt-in, then the effective date for removal of an area under paragraph (a) of this section shall be the date requested by the Governor, but no less than 90 days from the effective date of Agency approval of a revision to the plan that removes RFG as a control measure.

(d) The Administrator shall publish a notice in the FEDERAL REGISTER announcing the approval of any petition under paragraph (a) of this section, and the effective date for removal.

[61 FR 35680, July 8, 1996, as amended at 62 FR 54558, Oct. 20, 1997]

§ 80.73 Inability to produce conforming gasoline in extraordinary circumstances.

In appropriate extreme and unusual circumstances (*e.g.*, natural disaster or Act of God) which are clearly outside the control of the refiner, importer, or oxygenate blender and which could not have been avoided by the exercise of prudence, diligence, and due care, EPA may permit a refiner, importer, or oxygenate blender, for a brief period, to distribute gasoline which does not meet the requirements for reformulated gasoline, or does not contain the type(s) and amount(s) of oxygenate required under § 80.69(b)(1), if:

(a) It is in the public interest to do so (e.g., distribution of the nonconforming gasoline is necessary to meet projected shortfalls which cannot otherwise be compensated for);

(b) The refiner, importer, or oxygenate blender exercised prudent planning and was not able to avoid the violation and has taken all reasonable steps to minimize the extent of the nonconformity;

(c) The refiner, importer, or oxygenate blender can show how the requirements for reformulated gasoline will be expeditiously achieved;

(d) The refiner, importer, or oxygenate blender agrees to make up air quality detriment associated with the nonconforming gasoline, where practicable; and

(e) The refiner, importer, or oxygenate blender pays to the U.S. Treasury an amount equal to the economic benefit of the nonconformity minus the amount expended, pursuant to paragraph (d) of this section, in making up the air quality detriment.

[38 FR 1255, Jan. 10, 1973, as amended at 71 FR 26700, May 8, 2006]

§ 80.74 Recordkeeping requirements.

All parties in the gasoline distribution network, as described in this section, shall maintain records containing the information as required in this section. These records shall be retained for a period of five years from the date

of creation, and shall be delivered to the Administrator of EPA or to the Administrator's authorized representative upon request.

(a) *All regulated parties*. Any refiner, importer, oxygenate blender, carrier, distributor, reseller, retailer, or wholesale-purchaser who sells, offers for sale, dispenses, supplies, offers for supply, stores, transports, or causes the transportation of any reformulated gasoline or RBOB, shall maintain records containing the following information:

(1) The product transfer documentation for all reformulated gasoline or RBOB for which the party is the transferor or transferee; and

(2) For any sampling and testing on RBOB or reformulated gasoline:

(i) The location, date, time, and storage tank or truck identification for each sample collected;

(ii) The identification of the person who collected the sample and the person who performed the testing;

(iii) The results of the tests; and

(iv) The actions taken to stop the sale of any gasoline found not to be in compliance, and the actions taken to identify the cause of any noncompliance and prevent future instances of noncompliance.

(b) *Refiners and importers*. In addition to other requirements of this section, any refiner and importer shall, for all reformulated gasoline and RBOB produced or imported, maintain records containing the following information:

(1) Results of the tests to determine reformulated gasoline properties and characteristics specified in § 80.65;

(2) [Reserved]

(3) The volume of gasoline associated with each of the above test results using the method normally employed at the refinery or import facility for this purpose;

(4) In the case of RBOB:

(i) The results of tests to ensure that, following blending, RBOB meets applicable standards; and

(ii) Each contract with each oxygenate blender to whom the refiner or importer transfers RBOB; or

(iii) Compliance calculations described in § 80.69(a)(8) based on an assumed addition of oxygenate;

(5) In the case of any refinery or importer subject to the simple model standards, the calculations used to determine the 1990 baseline levels of sulfur, T–90, and olefins, and the calculations used to determine compliance with the standards for these parameters;

(6) In the case of any refinery or importer subject to the complex model standards before January 1, 1998, the calculations used to determine the baseline levels of VOC, toxics, and NO_X emissions performance; and

(7) In the case of any gasoline classified as previously certified gasoline under the terms of § 80.65(i):

(i) Results of the tests to determine the properties and volume of the previously certified gasoline when received at the refinery; and

(ii) Records that reflect the storage and movement of the previously certified gasoline within the refinery to the point the previously certified gasoline is used to produce reformulated gasoline or RBOB;

(8) In the case of butane blended into reformulated gasoline or RBOB under § 80.82, documentation of:

(i) The volume of butane added;

(ii) The volume of reformulated gasoline or RBOB both prior to and subsequent to the butane blending;

(iii) The purity and properties of the butane specified in § 80.82(c) and (d), as appropriate;

(iv) Compliance with the requirements of § 80.82; and

(9) In the case of any imported GTAB, documents that reflect the storage and physical movement of the GTAB from the point of importation to the point of blending to produce reformulated gasoline.

(10) In the case of any interface or transmix used to produce reformulated gasoline or RBOB under § 80.84, records that reflect the results of any sampling and testing of RFG or RBOB required under § 80.84.

(i) Pipelines must keep records showing that interface was designated in the proper manner, according to the designations listed in § 80.84(b)(1);

(ii) Transmix processors and transmix blenders must keep records showing that their transmix meets the definition in § 80.84(a)(2), or contains gasoline and distillate fuel only from the sources listed in § 80.84(e);

(iii) Transmix processors must keep records showing the volumes of reformulated gasoline or RBOB recovered from transmix and the type and amount of any blendstock added, if applicable; and

(iv) Transmix blenders must keep records showing compliance with the quality assurance program and/or sampling and testing requirements in § 80.84(d)(2) or (d)(3), and for each batch of reformulated gasoline or RBOB with which transmix is blended, the volume of the batch, and the volume of transmix blended into the batch;

(c) *Refiners and importers of averaged gasoline*. In addition to other requirements of this section, any refiner or importer who produces or imports any reformulated gasoline for which compliance with one or more applicable standard is determined on an average shall maintain records containing the following information:

(1) The calculations used to determine compliance with the relevant standards on average, for each averaging period and for each quantity of gasoline for which standards must be separately achieved; and

(2) For any credits bought, sold, traded or transferred pursuant to § 80.67(h), the dates of the transactions, the names and EPA registration numbers of the parties involved, and the number of credits transferred.

(d) *Oxygenate blenders*. Any oxygenate blender who blends any oxygenate with any RBOB shall, for each occasion such blending occurs, maintain records containing the following:

(i) The date, time, location, and identification of the blending tank or truck in which the blending occurred;

(ii) The volume and oxygenate requirements of the RBOB to which oxygenate was added; and

(iii) The volume, type, and purity of the oxygenate which was added, and documents which show the source(s) of the oxygenate used.

(e) *Distributors who dispense RBOB into trucks*. In addition to other requirements of this section, any distributor who dispenses any RBOB into a truck used for delivering gasoline to retail outlets shall, for each occasion RBOB is dispensed into such a truck, obtain records identifying:

(1) The name and EPA registration number of the oxygenate blender that received the RBOB; and

(2) The volume and oxygenate requirements of the RBOB dispensed.

(f) [Reserved]

(g) *Retailers before January 1, 1998*. Prior to January 1, 1998 any retailer that sells or offers for sale any reformulated gasoline shall maintain at each retail outlet the product transfer documentation for the most recent three deliveries to the retail outlet of each grade of reformulated gasoline sold or offered for sale at the retail outlet, and shall make such documentation available to any person conducting any gasoline compliance survey pursuant to § 80.68.

[59 FR 7813, Feb. 16, 1994, as amended at 66 FR 67106, Dec. 28, 2001; 71 FR 74569, Dec. 15, 2005; 71 FR 26700, May 8, 2006; 71 FR 31961, June 2, 2006]

§ 80.75 Reporting requirements.

Any refiner or importer shall report as specified in this section, and shall report such other information as the Administrator may require.

(a) *Quarterly reports for reformulated gasoline*. Any refiner or importer that produces or imports any reformulated gasoline or RBOB shall submit quarterly reports to the Administrator for each refinery at which such reformulated gasoline or RBOB was produced and for all such reformulated gasoline or RBOB imported by each importer.

(1) The quarterly reports shall be for all such reformulated gasoline or RBOB produced or imported during the following time periods:

(i) The first quarterly report shall include information for reformulated gasoline or RBOB produced or imported from January 1 through March 31, and shall be submitted by May 31 of each year beginning in 1995;

(ii) The second quarterly report shall include information for reformulated gasoline or RBOB produced or imported from April 1 through June 30, and shall be submitted by August 31 of each year beginning in 1995;

(iii) The third quarterly report shall include information for reformulated gasoline or RBOB produced or imported from July 1 through September 30, and

shall be submitted by November 30 of each year beginning in 1995; and

(iv) The fourth quarterly report shall include information for reformulated gasoline or RBOB produced or imported from October 1 through December 31, and shall be submitted by the last day of February of each year beginning in 1996.

(2) The following information shall be included in each quarterly report for each batch of reformulated gasoline or RBOB which is included under paragraph (a)(1) of this section:

(i) The batch number;

(ii) The date of production;

(iii) The volume of the batch;

(iv) The grade of gasoline produced (i.e., premium, mid-grade, or regular);

(v) For any refiner or importer:

(A) Each designation of the gasoline, pursuant to § 80.65; and

(B) The properties, pursuant to §§ 80.65 and 80.66;

(vi) For any importer, the PADD in which the import facility is located;

(vii) [Reserved]

(viii) In the case of any previously certified gasoline used in a refinery operation under the terms of § 80.65(i), the following information relative to the previously certified gasoline when received at the refinery:

(A) Identification of the previously certified gasoline as such;

(B) The batch number assigned by the receiving refinery;

(C) The date of receipt; and

(D) The volume, properties and designation of the batch.

(ix) In the case of butane blended with reformulated gasoline or RBOB under § 80.82:

(A) Identification of the butane batch as complying with the provisions of § 80.82;

(B) Identification of the butane batch as commercial or non-commercial grade butane;

(C) The batch number of the butane;

(D) The date of production of the gasoline produced using the butane batch;

(E) The volume of the butane batch;

(F) The properties of the butane batch specified by the butane supplier, or the properties specified in § 80.82(c) or (d), as appropriate;

(G) The volume of the gasoline batch subsequent to the butane blending; and

(x) In the case of any imported GTAB, identification of the gasoline as GTAB.

(3) Information pertaining to gasoline produced or imported during 1994 shall be included in the first quarterly report in 1995.

(b) *Reports for gasoline or RBOB produced or imported under the simple model*—(1) *RVP averaging reports.* (i) Any refiner or importer that produced or imported any reformulated gasoline or RBOB under the simple model that was to meet RVP standards on average (''averaged reformulated gasoline'') shall submit to the Administrator, with the third quarterly report, a report for each refinery or importer for such averaged reformulated gasoline or RBOB produced or imported during the previous RVP averaging period. This information shall be reported separately for the following categories:

(A) Gasoline or RBOB which is designated as VOC-controlled intended for areas in VOC-Control Region 1; and

(B) Gasoline or RBOB which is designated as VOC-controlled intended for VOC-Control Region 2.

(ii) The following information shall be reported:

(A) The total volume of averaged reformulated gasoline or RBOB in gallons;

(B) The compliance total value for RVP; and

(C) The actual total value for RVP.

(2) *Sulfur, olefins and T90 averaging reports.* (i) Any refiner or importer that produced or imported any reformulated gasoline or RBOB under the simple model shall submit to the Administrator, with the fourth quarterly report, a report for such reformulated gasoline or RBOB produced or imported during the previous year:

(A) For each refinery or importer; or

(B) In the case of refiners who operate more than one refinery, for each grouping of refineries as designated by the refiner pursuant to § 80.41(h)(2)(iii).

(ii) The following information shall be reported:

(A) The total volume of reformulated gasoline or RBOB in gallons;

(B) The applicable sulfur content standard under § 80.41(h)(2)(i) in parts per million;

(C) The average sulfur content in parts per million;

(D) The difference between the applicable sulfur content standard under §80.41(h)(2)(i) in parts per million and the average sulfur content under paragraph (b)(2)(ii)(C) of this section in parts per million, indicating whether the average is greater or lesser than the applicable standard;

(E) The applicable olefin content standard under §80.41(h)(2)(i) in volume percent;

(F) The average olefin content in volume percent;

(G) The difference between the applicable olefin content standard under §80.41(h)(2)(i) in volume percent and the average olefin content under paragraph (b)(2)(ii)(F) of this section in volume percent, indicating whether the average is greater or lesser than the applicable standard;

(H) The applicable T90 distillation point standard under §80.41(h)(2)(i) in degrees Fahrenheit;

(I) The average T90 distillation point in degrees Fahrenheit; and

(J) The difference between the applicable T90 distillation point standard under §80.41(h)(2)(i) in degrees Fahrenheit and the average T90 distillation point under paragraph (b)(2)(ii)(I) of this section in degrees Fahrenheit, indicating whether the average is greater or lesser than the applicable standard.

(c) *VOC emissions performance averaging reports.* (1) Any refiner or importer that produced or imported any reformulated gasoline or RBOB under the complex model that was to meet the VOC emissions performance standards on average (''averaged reformulated gasoline'') shall submit to the Administrator, with the third quarterly report, a report for each refinery or importer for such averaged reformulated gasoline produced or imported during the previous VOC averaging period. This information shall be reported separately for the following categories:

(i) Gasoline or RBOB which is designated as VOC-controlled intended for areas in VOC-Control Region 1; and

(ii) Gasoline or RBOB which is designated as VOC-controlled intended for VOC-Control Region 2.

(2) The following information shall be reported:

(i) The total volume of averaged reformulated gasoline or RBOB in gallons;

(ii) The compliance total value for VOC emissions performance; and

(iii) The actual total value for VOC emissions performance.

(d) *Benzene content averaging reports.* (1) Any refiner or importer that produced or imported any reformulated gasoline or RBOB that was to meet the benzene content standards on average (''averaged reformulated gasoline'') shall submit to the Administrator, with the fourth quarterly report, a report for each refinery or importer for such averaged reformulated gasoline that was produced or imported during the previous toxics averaging period.

(2) The following information shall be reported:

(i) The volume of averaged reformulated gasoline or RBOB in gallons;

(ii) The compliance total content of benzene;

(iii) The actual total content of benzene;

(iv) The number of benzene credits generated as a result of actual total benzene being less than compliance total benzene;

(v) The number of benzene credits required as a result of actual total benzene being greater than compliance total benzene;

(vi) The number of benzene credits transferred to another refinery or importer; and

(vii) The number of benzene credits obtained from another refinery or importer.

(e) *Toxics emissions performance averaging reports.* (1) Any refiner or importer that produced or imported any reformulated gasoline or RBOB that was to meet the toxics emissions performance standards on average (''averaged reformulated gasoline'') shall submit to the Administrator, with the fourth quarterly report, a report for each refinery or importer for such averaged reformulated gasoline that was produced or imported during the previous toxics averaging period.

(2) The following information shall be reported:

(i) The volume of averaged reformulated gasoline or RBOB in gallons;

(ii) The compliance value for toxics emissions performance; and

(iii) The actual value for toxics emissions performance.

(f) [Reserved]

(g) *NO_X emissions performance averaging reports.* (1) Any refiner or importer that produced or imported any reformulated gasoline or RBOB that was to meet the NO_X emissions performance standard on average (''averaged reformulated gasoline'') shall submit to the Administrator, with the fourth quarterly report, a report for each refinery or importer for such averaged reformulated gasoline that was produced or imported during the previous NO_X averaging period.

(2) The following information shall be reported:

(i) The volume of averaged reformulated gasoline or RBOB in gallons;

(ii) The compliance value for NO_X emissions performance; and

(iii) The actual value for NO_X emissions performance.

(3) The information required by paragraph (g)(2) of this section shall be reported separately for the following categories:

(i) Gasoline and RBOB which is designated as VOC-controlled; and

(ii) Gasoline and RBOB which is not designated as VOC-controlled.

(h) *Credit transfer reports.* As an additional part of the fourth quarterly report required by this section, any refiner or importer shall, for each refinery or importer, supply the following information for any benzene credits that are transferred from or to another refinery or importer:

(1) The names, EPA-assigned registration numbers and facility identification numbers of the transferor and transferee of the credits;

(2) The number(s) of credits that were transferred; and

(3) The date(s) of the transaction(s).

(i) *Covered areas of gasoline use report.* Any refiner that produced any reformulated gasoline that was to meet any reformulated gasoline standard on average (''averaged reformulated gasoline'') shall, for each refinery at which such averaged reformulated gasoline was produced submit to the Administrator, with the fourth quarterly report, a report that contains the identity of each covered area that was supplied with any averaged reformulated gasoline produced at each refinery during the previous year.

(j) *Additional reporting requirements for certain importers.* In the case of any importer to whom different standards apply for gasoline imported at different facilities by operation of § 80.41(q)(2), such importer shall submit separate reports for gasoline imported into facilities subject to different standards.

(k) *Reporting requirements for early use of the complex model.* Any refiner for any refinery, or any importer, that elects to be subject to complex model standards under § 80.41(i)(1) shall report such election in writing to the Administrator no later than sixty days prior to the beginning of the calendar year during which such standards would apply. This report shall include the refinery's or importer's baseline values for VOC, NO_X, and toxics emissions performance, in milligrams per mile.

(l) *Reports for per-gallon compliance gasoline.* In the case of reformulated gasoline or RBOB for which compliance with each of the standards set forth in § 80.41 is achieved on a per-gallon basis, the refiner or importer shall submit to the Administrator, by the last day of February of each year beginning in 1996, a report of the volume of each designated reformulated gasoline or RBOB produced or imported during the previous calendar year for which compliance is achieved on a per-gallon basis, and a statement that each gallon of this reformulated gasoline or RBOB met the applicable standards.

(m) *Reports of compliance audits.* Any refiner or importer shall cause to be submitted to the Administrator, by May 31 of each year, the report of the compliance audit required by § 80.65(h).

(n) *Report submission.* The reports required by this section shall be:

(1) Submitted on forms and following procedures specified by the Administrator; and

(2) Signed and certified as correct by the owner or a responsible corporate officer of the refiner or importer.

(o) *Additional reporting requirements for refiners that blend butane with reformulated gasoline or RBOB.* For refiners

that blend any butane with reformulated gasoline or RBOB under § 80.82, the refiner shall submit to the Administrator, by the last day of February of each year, a report for the refinery which includes the following information for the previous calendar year:

(1) The total volume of butane blended with reformulated gasoline or RBOB at the refinery, separately for reformulated gasoline and RBOB;

(2) The total volume of reformulated gasoline or RBOB produced using butane, separately for reformulated gasoline and RBOB;

(3) A statement that each gallon of reformulated gasoline or RBOB produced using butane met the applicable per-gallon standards under § 80.41;

(4) A statement that all butane blended with reformulated gasoline or RBOB at the refinery is included in the volume reported in paragraph (o)(2) of this section;

[59 FR 7813, Feb. 16, 1994, as amended at 59 FR 36964, July 20, 1994; 60 FR 65574, Dec. 20, 1995; 62 FR 60135, Nov. 6, 1997; 66 FR 67106, Dec. 28, 2001; 71 FR 74569, Dec. 15, 2005; 71 FR 26700, May 8, 2006]

§ 80.76 Registration of refiners, importers or oxygenate blenders.

(a) Registration with the Administrator of EPA is required for any refiner and importer that produces or imports any reformulated gasoline or RBOB, and any oxygenate blender that blends oxygenate into RBOB.

(b) Any person required to register shall do so by November 1, 1994, or not later than three months in advance of the first date that such person will produce or import reformulated gasoline or RBOB or conventional gasoline, whichever is later.

(c) Registration shall be on forms prescribed by the Administrator, and shall include the following information:

(1) The name, business address, contact name, and telephone number of the refiner, importer, or oxygenate blender;

(2) For each separate refinery and oxygenate blending facility, the facility name, physical location, contact name, telephone number, and type of facility; and

(3) For each separate refinery and oxygenate blending facility, and for each importer's operations in a single PADD:

(i) Whether records are kept on-site or off-site of the refinery or oxygenate blending facility, or in the case of importers, the registered address;

(ii) If records are kept off-site, the primary off-site storage facility name, physical location, contact name, and telephone number; and

(iii) The name, address, contact name and telephone number of the independent laboratory used to meet the independent analysis requirements of § 80.65(f).

(d) EPA will supply a registration number to each refiner, importer, and oxygenate blender, and a facility registration number for each refinery and oxygenate blending facility that is identified, which shall be used in all reports to the Administrator.

(e)(1) Any refiner, importer, or oxygenate blender shall submit updated registration information to the Administrator within thirty days of any occasion when the registration information previously supplied becomes incomplete or inaccurate; except that

(2) EPA must be notified in writing of any change in designated independent laboratory at least thirty days in advance of such change.

[59 FR 7813, Feb. 16, 1994, as amended at 59 FR 36965, July 20, 1994; 71 FR 74570, Dec. 15, 2005; 71 FR 26701, May 8, 2006]

§ 80.77 Product transfer documentation.

On each occasion when any person transfers custody or title to any reformulated gasoline or RBOB, other than when gasoline is sold or dispensed for use in motor vehicles at a retail outlet or wholesale purchaser-consumer facility, the transferor shall provide to the transferee documents which include the following information:

(a) The name and address of the transferor;

(b) The name and address of the transferee;

(c) The volume of gasoline or RBOB which is being transferred;

(d) The location of the gasoline at the time of the transfer;

(e) The date of the transfer;

(f) The proper identification of the product as reformulated gasoline or RBOB;

(g) In the case of reformulated gasoline or RBOB:

(1) The proper identification as:

(i)(A) VOC-controlled for VOC-Control Region 1; or VOC-controlled for VOC-Control Region 2; or Not VOC-controlled; or

(B) In the case of gasoline or RBOB that is VOC-controlled for VOC-Control Region 1, the gasoline may be identified as suitable for use either in VOC-Control Region 1 or VOC-Control Region 2;

(ii) [Reserved]

(iii) Prior to January 1, 1998, certified under the simple model standards or certified under the complex model standards; and

(2) The minimum and/or maximum standards with which the gasoline or RBOB conforms for:

(i) Benzene content;

(ii) [Reserved]

(iii) In the case of VOC-controlled gasoline subject to the simple model standards, RVP;

(iv) In the case of gasoline subject to the complex model standards:

(A) Prior to January 1, 1998, the NOx emissions performance minimum, and for VOC-controlled gasoline the VOC emissions performance minimum, in milligrams per mile; and

(B) Beginning on January 1, 1998, for VOC-controlled gasoline, the VOC emissions performance minimum.

(3) Identification of VOC-controlled reformulated gasoline or RBOB as gasoline or RBOB which contains ethanol, or which does not contain any ethanol; and

(4) For transfers of custody of gasoline subject to the provisions of § 80.69(a)(11), the information required to be included on product transfer documents under § 80.69(a)(11)(vii)(A).

(h) Prior to January 1, 1998, in the case of reformulated gasoline or RBOB subject to the complex model standards:

(1) The name and EPA registration number of the refinery at which the gasoline was produced, or importer that imported the gasoline; and

(2) Instructions that the gasoline or RBOB may not be combined with any other gasoline or RBOB that was produced at any other refinery or was imported by any other importer;

(i) In the case of RBOB:

(1) The designation of the RBOB as suitable for blending with:

(i) Any-oxygenate;

(ii) Ether-only; or

(iii) Other specified oxygenate type(s) and amount(s);

(2) The oxygenate type(s) and amount(s) that are intended for blending with the RBOB;

(3) Instructions that the RBOB may not be combined with any other RBOB except other RBOB having the same requirements for oxygenate type(s) and amount(s), or, prior to blending, with reformulated gasoline.

[59 FR 7813, Feb. 16, 1994, as amended at 59 FR 36965, July 20, 1994; 62 FR 60136, Nov. 6, 1997; 62 FR 68207, Dec. 31, 1997; 71 FR 74570, Dec. 15, 2005; 71 FR 26701, May 8, 2006; 71 FR 31961, June 2, 2006]

§ 80.78 Controls and prohibitions on reformulated gasoline.

(a) *Prohibited activities.* (1) No person may manufacture and sell or distribute, offer for sale or distribution, dispense, supply, offer for supply, store, transport, or cause the transportation of any gasoline represented as reformulated and intended for sale or use in any covered area:

(i) Unless each gallon of such gasoline meets the applicable benzene maximum standard specified in § 80.41;

(ii)–(iii) [Reserved]

(iv) Unless the product transfer documentation for such gasoline complies with the requirements in § 80.77; and

(v) During the period May 1 through September 15 for all persons except retailers and wholesale purchaser-consumers, and during the period June 1 through September 15 for all persons including retailers and wholesale purchaser-consumers:

(A) Unless each gallon of such gasoline is VOC-controlled for the proper VOC Control Region, except that gasoline designated for VOC-Control Region 1 may be used in VOC-Control Region 2;

(B) Unless each gallon of such gasoline that is subject to simple model standards has an RVP which is less than or equal to the applicable RVP maximum specified in § 80.41;

(C) Unless each gallon of such gasoline that is subject to complex model standards has a VOC emissions reduction percentage which is greater than or equal to the applicable minimum specified in § 80.41.

(2) No refiner or importer may produce or import any gasoline represented as reformulated or RBOB, and intended for sale or use in any covered area:

(i) Unless such gasoline meets the definition of reformulated gasoline or RBOB; and

(ii) Unless the properties of such gasoline or RBOB correspond to the product transfer documents.

(3) [Reserved]

(4) Gasoline shall be presumed to be intended for sale or use in a covered area unless:

(i) Product transfer documentation as described in § 80.77 accompanying such gasoline clearly indicates the gasoline is intended for sale and use only outside any covered area; or

(ii) The gasoline is contained in the storage tank of a retailer or wholesale purchaser-consumer outside any covered area.

(5) No person may combine any reformulated gasoline with any conventional gasoline or blendstock, except that a refiner may do so at a refinery under the requirements specified in § 80.65(i), or if the combined product is designated as conventional gasoline.

(6) No person may add any oxygenate to reformulated gasoline, except that such oxygenate may be added to reformulated gasoline provided that such gasoline is used in an oxygenated fuels program control area during an oxygenated fuels control period.

(7) No person may combine any reformulated gasoline blendstock for oxygenate blending with any other gasoline, blendstock, or oxygenate except:

(i) Oxygenate of the type and amount (or within the range of amounts) specified by the refiner or importer at the time the RBOB was produced or imported;

(ii) Other RBOB for which the same oxygenate type and amount (or range of amounts) was specified by the refiner or importer; or

(iii) Under the terms of paragraph (a)(5) of this section.

(8)(i) No person may combine any ethanol-blended VOC-controlled reformulated gasoline with any non-ethanol-blended VOC-controlled reformulated gasoline during the period January 1 through September 15, except that:

(ii) Notwithstanding the prohibition in paragraph (a)(8)(i), retailers and wholesale purchaser-consumers may combine at a retail outlet or wholesale purchaser-consumer facility ethanol-blended VOC-controlled reformulated gasoline with non-ethanol-blended VOC-controlled reformulated gasoline, provided that the retailer or wholesale purchaser-consumer:

(A) Combines only batches of reformulated gasoline that have been certified under this subpart;

(B) Notifies EPA prior to combining the gasolines and identifies the exact location of the retail outlet or wholesale purchase-consumer facility and the specific tank in which the gasolines will be combined;

(C) Retains and, upon request by EPA, makes available for inspection product transfer documentation accounting for all gasoline at the retail outlet or wholesale purchaser-consumer facility; and

(D) Does not combine any VOC-controlled gasoline with any non-VOC controlled gasoline between June 1 and September 15 of each calendar year;

(iii) A retailer or wholesale purchaser-consumer may combine ethanol-blended reformulated gasoline with non-ethanol-blended reformulated gasoline under paragraph (a)(8)(ii) of this section a maximum of two periods between May 1 and September 15 of each calendar year, each such period to extend for a period of no more than ten consecutive calendar days. At the end of the ten-day period, the gasoline must be in compliance with the VOC minimum standard under § 80.41.

(A) The retailer or wholesale purchaser-consumer may demonstrate compliance with the VOC minimum standard by testing the gasoline at the end of the ten-day period using the test methods in § 80.46, where the test results show that the gasoline meets the

VOC minimum standard. Under this option, the retailer or wholesale purchaser-consumer may add both ethanol-blended reformulated gasoline and non-ethanol-blended reformulated gasoline to the same tank an unlimited number of times during the ten-day period; or

(B) The retailer or wholesale purchaser-consumer will be deemed in compliance with the VOC minimum standard where the retailer or wholesale purchaser-consumer draws the tank down as low as practicable before receiving product of the other type into the tank and receives only product of the other type into the tank during the ten-day period. Under this option, the retailer or wholesale purchaser-consumer is not required to test the gasoline at the end of the ten-day period.

(iv) Nothing in paragraphs (a)(8)(ii) or (iii) of this section shall preempt existing State laws or regulations regulating the combining of ethanol-blended reformulated gasoline with non-ethanol-blended reformulated gasoline or prohibit a State from adopting such laws or regulations in the future.

(9) Prior to January 1, 1998:

(i) No person may combine any reformulated gasoline or RBOB that is subject to the simple model standards with any reformulated gasoline or RBOB that is subject to the complex model standards, except that such gasolines may be combined at a retail outlet or wholesale purchaser-consumer facility;

(ii) No person may combine any reformulated gasoline subject to the complex model standards that is produced at any refinery or is imported by any importer with any other reformulated gasoline that is produced at a different refinery or is imported by a different importer, unless the other refinery or importer has an identical baseline for meeting complex model standards during this period; and

(iii) No person may combine any RBOB subject to the complex model standards that is produced at any refinery or is imported by any importer with any RBOB that is produced at a different refinery or is imported by a different importer, unless the other refinery or importer has an identical baseline for meeting complex model standards during this period.

(10) The prohibitions against combining certain categories of gasoline under paragraphs (a)(5), (a)(7) and (a)(8) of this section do not apply in the case of a party who is changing the type of gasoline stored in a gasoline storage tank or the type of gasoline transported through a gasoline pipe or manifold within a single facility (a gasoline storage tank, pipe, or manifold change of service), or in the case of a change of service that involves mixing gasoline with blendstock, provided that:

(i) The change of service is for a legitimate operational reason and is not for the purpose of combining the categories of gasoline or of combining gasoline with blendstock;

(ii) Prior to adding product of the new category the volume of product of the old category in the tank, pipe or manifold is made as low as possible through normal pumping operations;

(iii) The volume of product of the new category that is added to the tank, pipe or manifold is as large as possible taking into account the availability of product of the new category; and

(iv) In any case where the new category of product is reformulated gasoline, subsequent to adding the gasoline of the new category, a representative sample from the tank, pipe or manifold is collected and analyzed, and such analysis shows compliance with each standard under § 80.41 that is relevant to the new gasoline category. The analysis for each standard must be conducted using the method specified under § 80.46, or using another method that is approved by the American Society of Testing and Materials (ASTM), provided that the protocols of the ASTM method are followed and the alternative method is correlated to the method specified under § 80.46.

(11) The prohibition against combining reformulated gasoline with RBOB under paragraph (a)(7) of this section does not apply in the case of a party who is changing the type of product stored in a tank from which trucks are loaded, from reformulated gasoline to RBOB, or vice versa, provided that:

(i) The change of service requirements described in paragraph (a)(10) of

this section cannot be met without taking the storage tank out of service;

(ii) Prior to adding product of the new category the volume of product of the old category in the tank is drawn down to the lowest point which allows trucks to be loaded during the transition;

(iii) The volume of product of the new category that is added to the tank is as large as possible taking into account the availability of product of the new category;

(iv) When transitioning from RBOB to reformulated gasoline, the reformulated gasoline must meet all applicable standards that apply at the terminal subsequent to any oxygenate blending;

(v) When transitioning from reformulated gasoline to RBOB:

(A) The oxygen content of the reformulated gasoline produced using the RBOB must be not less than the minimum oxygen amount specified in the RBOB product transfer documents;

(B) Subsequent to any oxygenate blending, the reformulated gasoline produced using the RBOB must meet all applicable standards that apply at the terminal; and

(C) The transition from reformulated gasoline to RBOB may not begin until the date the VOC-control standards no longer apply to the terminal; and

(vi) The party must demonstrate compliance with the requirements specified in paragraphs (a)(11)(iv) and (v) of this section through testing of samples collected from the terminal storage tank and from trucks loaded at the terminal subsequent to each receipt of new product until the transition is complete. The analyses must be conducted using the test method specified under § 80.46, or using another test method that is approved by the American Society of Testing and Materials (ASTM), provided that the protocols of the ASTM method are followed and the alternative method is correlated with the method specified under § 80.46.

(12)(i) The prohibited activities specified in paragraph (a)(1) of this section do not apply in the case of gasoline that is used to fuel aircraft, or racing motor vehicles or racing boats that are used only in sanctioned racing events, provided that product transfer documents associated with such gasoline, and any pump stand from which such gasoline is dispensed, identify the gasoline either as conventional gasoline that is restricted for use in aircraft, or as conventional gasoline that is restricted for use in racing motor vehicles or racing boats that are used only in sanctioned racing events.

(ii) A vehicle shall be considered to be a racing vehicle only if the vehicle:

(A) Is operated in conjunction with sanctioned racing events;

(B) Exhibits racing features and modifications such that it is incapable of safe and practical street or highway use;

(C) Is not licensed, and is not licensable, by any state for operation on public streets or highways;

(D) Is not operated on public streets or highways; and

(E) Could not be converted to public street or highway use at a cost that is reasonable compared to the value of the vehicle.

(b) *Liability*. Liability for violations of paragraph (a) of this section shall be determined according to the provisions of § 80.79.

(c) *Determination of compliance*. Compliance with the standards listed in paragraph (a) of this section shall be determined by use of one of the testing methodologies specified in § 80.46, except that where test results using the testing methodologies specified in § 80.46 are not available or where such test results are available but are in question, EPA may establish noncompliance with standards using any information, including the results of testing using methods that are not included in § 80.46.

(d) *Dates controls and prohibitions begin*. The controls and prohibitions specified in paragraph (a) of this section apply at any location other than retail outlets and wholesale purchaser-consumer facilities on or after December 1, 1994, at any location on or after January 1, 1995.

[59 FR 7813, Feb. 16, 1994, as amended at 59 FR 36965, July 20, 1994; 62 FR 60136, Nov. 6, 1997; 62 FR 68207, Dec. 31, 1997; 66 FR 67106, Dec. 28, 2001; 71 FR 74570, Dec. 15, 2005; 71 FR 8972, 8985, Feb. 22, 2006; 71 FR 26420, May 5, 2006; 71 FR 26701, May 8, 2006]

§ 80.79 Liability for violations of the prohibited activities.

(a) *Persons liable.* Where the gasoline contained in any storage tank at any facility owned, leased, operated, controlled or supervised by any refiner, importer, oxygenate blender, carrier, distributor, reseller, retailer, or wholesale purchaser-consumer is found in violation of the prohibitions described in § 80.78(a), the following persons shall be deemed in violation:

(1) Each refiner, importer, oxygenate blender, carrier, distributor, reseller, retailer, or wholesale purchaser-consumer who owns, leases, operates, controls or supervises the facility where the violation is found;

(2) Each refiner or importer whose corporate, trade, or brand name, or whose marketing subsidiary's corporate, trade, or brand name, appears at the facility where the violation is found;

(3) Each refiner, importer, oxygenate blender, distributor, and reseller who manufactured, imported, sold, offered for sale, dispensed, supplied, offered for supply, stored, transported, or caused the transportation of any gasoline which is in the storage tank containing gasoline found to be in violation; and

(4) Each carrier who dispensed, supplied, stored, or transported any gasoline which is in the storage tank containing gasoline found to be in violation, provided that EPA demonstrates, by reasonably specific showings by direct or circumstantial evidence, that the carrier caused the violation.

(5) Notwithstanding the provisions in paragraphs (a)(1) through (a)(4) of this section: (i) Only a retailer or wholesale purchaser-consumer shall be deemed in violation for combining gasolines in a manner that is inconsistent with § 80.78(a)(8)(ii) or (iii), or for gasoline which does not comply with the VOC minimum standard under § 80.41 after the retailer or wholesale purchaser-consumer combines or causes the combining of compliant gasolines in a manner inconsistent with § 80.78(a)(8)(ii) or (iii);

(ii) No person shall be deemed in violation for gasoline which does not comply with the VOC minimum standard under § 80.41 where the non-compliance is solely due to the combining of compliant gasolines by a retailer or wholesale purchaser-consumer in a manner that is consistent with § 80.78(a)(8)(ii) and (iii).

(b) *Defenses for prohibited activities.* (1) In any case in which a refiner, importer, oxygenate blender, carrier, distributor, reseller, retailer, or wholesale purchaser-consumer would be in violation under paragraph (a) of this section, it shall be deemed not in violation if it can demonstrate:

(i) That the violation was not caused by the regulated party or its employee or agent;

(ii) That product transfer documents account for all of the gasoline in the storage tank found in violation and indicate that the gasoline met relevant requirements; and

(iii)(A) That it has conducted a quality assurance sampling and testing program, as described in paragraph (c) of this section; except that

(B) A carrier may rely on the quality assurance program carried out by another party, including the party that owns the gasoline in question, provided that the quality assurance program is carried out properly.

(2)(i) Where a violation is found at a facility which is operating under the corporate, trade or brand name of a refiner, that refiner must show, in addition to the defense elements required by paragraph (b)(1) of this section, that the violation was caused by:

(A) An act in violation of law (other than the Act or this part), or an act of sabotage or vandalism;

(B) The action of any reseller, distributor, oxygenate blender, carrier, or a retailer or wholesale purchaser- consumer supplied by any of these persons, in violation of a contractual undertaking imposed by the refiner designed to prevent such action, and despite periodic sampling and testing by the refiner to ensure compliance with such contractual obligation; or

(C) The action of any carrier or other distributor not subject to a contract with the refiner but engaged by the refiner for transportation of gasoline, despite specification or inspection of procedures and equipment by the refiner which are reasonably calculated to prevent such action.

(ii) In this paragraph (b), to show that the violation ''was caused'' by any of the specified actions the party must demonstrate by reasonably specific showings, by direct or circumstantial evidence, that the violation was caused or must have been caused by another.

(c) *Quality assurance program.* In order to demonstrate an acceptable quality assurance program for reformulated gasoline at all points in the gasoline distribution network, other than at retail outlets and wholesale purchaser-consumer facilities, a party must present evidence of the following.

(1) Of a periodic sampling and testing program to determine if the applicable maximum and/or minimum standards for oxygen, benzene, RVP, or VOC emission performance are met. For gasoline subject to the provisions in § 80.81, a party is not required to conduct periodic sampling and testing to determine compliance with the oxygen minimum standard.

(2) That on each occasion when gasoline is found in noncompliance with one of the requirements referred to in paragraph (c)(1) of this section:

(i) The party immediately ceases selling, offering for sale, dispensing, supplying, offering for supply, storing, transporting, or causing the transportation of the violating product; and

(ii) The party promptly remedies the violation (such as by removing the violating product or adding more complying product until the applicable standards are achieved).

(3) An oversight program conducted by a carrier under paragraph (c)(1) of this section need not include periodic sampling and testing of gasoline in a tank truck operated by a common carrier, but in lieu of such tank truck sampling and testing the common carrier shall demonstrate evidence of an oversight program for monitoring compliance with the requirements of § 80.78 relating to the transport or storage of gasoline by tank truck, such as appropriate guidance to drivers on compliance with applicable requirements and the periodic review of records normally received in the ordinary course of business concerning gasoline quality and delivery.

[38 FR 1255, Jan. 10, 1973, as amended at 62 FR 68207, Dec. 31, 1997; 71 FR 8973, 8985, Feb. 22, 2006; 71 FR 26420, May 5, 2006; 71 FR 26701, May 8, 2006; 71 FR 27533, May 11, 2006]

§ 80.80 Penalties.

(a) Any person that violates any requirement or prohibition of subpart D, E, or F of this part shall be liable to the United States for a civil penalty of not more than the sum of $25,000 for every day of each such violation and the amount of economic benefit or savings resulting from each such violation.

(b) Any violation of a standard for average compliance during any averaging period, or for per-gallon compliance for any batch of gasoline, shall constitute a separate violation for each and every standard that is violated.

(c) Any violation of any standard based upon a multi-day averaging period shall constitute a separate day of violation for each and every day in the averaging period. Any violation of any credit creation or credit transfer requirement shall constitute a separate day of violation for each and every day in the averaging period.

(d)(1)(i) Any violation of any per- gallon standard or of any per-gallon minimum or per-gallon maximum, other than the standards specified in paragraph (e) of this section, shall constitute a separate day of violation for each and every day such gasoline giving rise to such violations remains any place in the gasoline distribution system, beginning on the day that the gasoline that violates such per-gallon standard is produced or imported and distributed and/or offered for sale, and ending on the last day that any such gasoline is offered for sale or is dispensed to any ultimate consumer for use in any motor vehicle; unless

(ii) The violation is corrected by altering the properties and characteristics of the gasoline giving rise to the violations and any mixture of gasolines that contains any of the gasoline giving rise to the violations such that the said gasoline or mixture of gasolines has the properties and characteristics that would have existed if the gasoline giving rise to the violations had been

produced or imported in compliance with all per-gallon standards.

(2) For the purposes of this paragraph (d), the length of time the gasoline in question remained in the gasoline distribution system shall be deemed to be twenty-five days; unless the respective party or EPA demonstrates by reasonably specific showings, by direct or circumstantial evidence, that the gasoline giving rise to the violations remained any place in the gasoline distribution system for fewer than or more than twenty-five days.

(e)(1) Any reformulated gasoline that is produced or imported and offered for sale and for which the requirements to determine the properties and characteristics under § 80.65(f) is not met, or any conventional gasoline for which the refiner or importer does not sample and test to determine the relevant properties, shall be deemed:

(i)(A) Except as provided in paragraph (e)(1)(i)(B) of this section to have the following properties:

Sulfur content—970 ppm
Benzene content—5 vol %
RVP (summer)—11 psi
50% distillation—250 °F
90% distillation—375 °F
Oxygen content—0 wt %
Aromatics content—50 vol %
Olefins content—26 vol %

(B) To have the following properties in paragraph (e)(1)(i)(A) of this section unless the respective party or EPA demonstrates by reasonably specific showings, by direct or circumstantial evidence, different properties for the gasoline giving rise to the violations; and

(ii) In the case of reformulated gasoline, to have been designated as meeting all applicable standards on a per-gallon basis.

(2) For the purposes of paragraph (e)(1) of this section, any refiner or importer that fails to meet the independent analysis requirements of § 80.65(f) may not use the results of sampling and testing that is carried out by that refiner or importer as direct or circumstantial evidence of the properties of the gasoline giving rise to the violations, unless this failure was not caused by the refiner or importer.

(f) Any violation of any affirmative requirement or prohibition not included in paragraph (c) or (d) of this section shall constitute a separate day of violation for each and every day such affirmative requirement is not properly accomplished, and/or for each and every day the prohibited activity continues. For those violations that may be ongoing under subparts D, E, and F of this part, each and every day the prohibited activity continues shall constitute a separate day of violation.

§ 80.81 Enforcement exemptions for California gasoline.

(a)(1) The requirements of subparts D, E, F, and J of this part are modified in accordance with the provisions contained in this section in the case of California gasoline.

(2) For purposes of this section, ''California gasoline'' means any gasoline that is sold, intended for sale, or made available for sale as a motor vehicle fuel in the State of California and that:

(i) Is manufactured within the State of California;

(ii) Is imported into the State of California from outside the United States; or

(iii) Is imported into the State of California from inside the United States and that is manufactured at a refinery that does not produce reformulated gasoline for sale in any covered area outside the State of California.

(b)(1) Any refiner or importer of gasoline that is sold, intended for sale, or made available for sale as a motor fuel in the State of California is, with regard to such gasoline, exempt from the compliance survey provisions contained in § 80.68.

(2) Any refiner or importer of California gasoline is, with regard to such gasoline, exempt from the independent analysis requirements contained in § 80.65(f).

(3) Any refiner, importer, or oxygenate blender of California gasoline that elects to meet any benzene content, oxygen content, or toxics emission reduction standard specified in § 80.41 on average for any averaging period specified in § 80.67 that is in part before March 1, 1996, and in part subsequent to such date, shall, with regard to such gasoline that is produced or imported

prior to such date, demonstrate compliance with each of the standards specified in § 80.41 for each of the following averaging periods in lieu of those specified in § 80.67:

(i) January 1 through December 31, 1995; and

(ii) March 1, 1995, through February 29, 1996.

(4) The compliance demonstration required by paragraph (b)(3)(ii) of this section shall be submitted no later than May 31, 1996, along with the report for the first quarter of 1996 required to be submitted under § 80.75(a)(1)(i).

(c) Any refiner, importer, or oxygenate blender of California gasoline that is manufactured or imported subsequent to March 1, 1996 and that meets the requirements of the California Phase 2 or Phase 3 reformulated gasoline regulations, as set forth in Title 13, California Code of Regulations, section 2250 *et seq.* (May 1, 2003), is with regard to such gasoline, exempt from the following requirements (in addition to the requirements specified in paragraph (b) of this section:

(1) The parameter value reconciliation requirements contained in § 80.65(e)(2);

(2) The designation of gasoline requirements contained in § 80.65(d), except in the case of RBOB that is designated as ''any renewable oxygenate,'' ''non-VOC controlled renewable ether only'', or ''renewable ether only'';

(3) The reformulated gasoline and RBOB compliance requirements contained in § 80.65(c);

(4) [Reserved]

(5) The annual compliance audit requirements contained in § 80.65(h), except where such audits are required with regard to the renewable oxygenate requirements contained in § 80.83;

(6) The downstream oxygenate blending requirements contained in § 80.69, except where such requirements apply to the renewable oxygenate requirements contained in § 80.83;

(7) The record keeping requirements contained in §§ 80.74 and 80.104, except that records required to be maintained under Title 13, California Code of Regulations, section 2270, shall be maintained for a period of five years from the date of creation and shall be delivered to the Administrator or to the Administrator's authorized representative upon request;

(8) The reporting requirements contained in §§ 80.75 and 80.105;

(9) The product transfer documentation requirements contained in § 80.77; and

(10) The compliance attest engagement requirements contained in subpart F of this part, except where such requirements apply to the renewable oxygenate requirements contained in § 80.83.

(d) Any refiner or importer that produces or imports gasoline that is sold, intended for sale, or made available for sale as a motor vehicle fuel in the State of California subsequent to March 1, 1996, shall demonstrate compliance with the standards specified in §§ 80.41 and 80.90 by excluding the volume and properties of such gasoline from all conventional gasoline and reformulated gasoline that it produces or imports that is not sold, intended for sale, or made available for sale as a motor vehicle fuel in the State of California subsequent to such date. The exemption provided in this section does not exempt any refiner or importer from demonstrating compliance with such standards for all gasoline that it produces or imports.

(e)(1) The exemption provisions contained in paragraphs (b)(2), (b)(3), (c), and (f) of this section shall not apply under the circumstances set forth in paragraphs (e)(2) and (e)(3) of this section.

(2) [Reserved]

(3)(i) Such exemption provisions shall not apply to any refiner or importer of California gasoline who has been assessed a civil, criminal or administrative penalty for a violation of subpart D, E or F of this part or for a violation of the California Phase 2 reformulated gasoline regulations set forth in Title 13, California Code of Regulations, sections 2260 *et seq.*, effective 90 days after the date of final agency or district court adjudication of such penalty assessment.

(ii) Any refiner or importer subject to the provisions of paragraph (e)(3)(i) of this section may submit a petition to the Administrator for relief, in whole or in part, from the applicability

of such provisions, for good cause. Good cause may include a showing that the violation for which a penalty was assessed was not a substantial violation of the Federal California reformulated gasoline regulations.

(f) In the case of any gasoline that is sold, intended for sale, or made available for sale as a motor vehicle fuel in the State of California subsequent to March 1, 1996, any person that manufactures, sells, offers for sale, dispenses, supplies, offers for supply, stores, transports, or causes the transportation of such gasoline is, with regard to such gasoline, exempt from the following prohibited activities provisions:

(1) The oxygenated fuels provisions contained in § 80.78(a)(1)(iii);

(2) The product transfer provisions contained in § 80.78(a)(1)(iv);

(3) The oxygenate blending provisions contained in § 80.78(a)(7); and

(4) The segregation of simple and complex model certified gasoline provision contained in § 80.78(a)(9).

(g)(1) Any refiner that operates a refinery located outside the State of California at which California gasoline is produced (as defined in paragraph (a)(2)(ii) or (iii) of this section) is produced shall, with regard to such gasoline, provide to any person to whom custody or title of such gasoline has transferred, and each transferee shall provide to any subsequent transferee, documents which include the following information:

(i) The name and address of the transferor;

(ii) The name and address of the transferee;

(iii) The volume of gasoline which is being transferred;

(iv) The location of the gasoline at the time of the transfer;

(v) The date and time of the transfer;

(vi) The identification of the gasoline as California gasoline.

(2) Each refiner and transferee of such gasoline shall maintain copies of the product transfer documents required to be provided by paragraph (g)(1) of this section for a period of five years from the date of creation and shall deliver such documents to the Administrator or to the Administrator's authorized representative upon request.

(h)(1) For the purposes of the batch sampling and analysis requirements contained in § 80.65(e)(1) and § 80.101(i)(1)(i)(A), any refiner or importer of California gasoline may use a sampling and/or analysis methodology prescribed in Title 13, California Code of Regulations, section 2260 *et seq.* (as amended July 2, 1996), in lieu of any applicable methodology specified in § 80.46, with regards to:

(i) Such gasoline; or

(ii) That portion of its gasoline produced or imported for use in other areas of the United States, provided that:

(A) The gasoline must be produced by a refinery that is located in the state of California that produces California gasoline, or imported into California from outside the United States as California gasoline;

(B) The gasoline must be classified as conventional gasoline upon exportation from the California; and

(C) The refiner or importer must correlate the results from the applicable sampling and/or analysis methodology prescribed in Title 13, California Code of Regulations, section 2250 *et seq.* (May 1, 2003) with the method specified in § 80.46, and such correlation must be adequately demonstrated to EPA upon request.

(2) Nothwithstanding the requirements of § 80.65(e)(1) regarding when the properties of a batch of reformulated gasoline must be determined, a refiner of California gasoline may determine the properties of gasoline as specified under § 80.65(e)(1) at off site tankage provided that:

(i) The samples are properly collected under the terms of a current and valid protocol agreement between the refiner and the California Air Resources Board with regard to sampling at the off site tankage and consistent with the requirements prescribed in Title 13, California Code of Regulations, section 2250 *et seq.* (May 1, 2003); and

(ii) The refiner provides a copy of the protocol agreement to EPA upon request.

[59 FR 7813, Feb. 16, 1994, as amended at 59 FR 36965, July 20, 1994; 59 FR 39289, Aug. 2, 1994; 59 FR 60715, Nov. 28, 1994; 63 FR 34825, June 26, 1998; 64 FR 49997, Sept. 15, 1999; 66 FR 17263, Mar. 29, 2001; 70 FR 75920, Dec. 21, 2005; 70 FR 74570, Dec. 15, 2005; 71 FR 8973, Feb. 22, 2006; 71 FR 26701, May 8, 2006]

EFFECTIVE DATE NOTE: At 59 FR 39289, Aug. 2, 1994, § 80.81 was amended by revising paragraphs (c)(2), (c)(5), (c)(6), and (c)(10) effective September 1, 1994. At 59 FR 60715, Nov. 28, 1994, the amendment was stayed effective September 13, 1994. At 70 FR 74570, Dec. 15, 2005, § 80.81 was amended by revising paragraphs (c)(2), (c)(5), (c)(6), and (c)(10); however, the amendment could not be incorporated because those paragraphs are stayed.

§ 80.82 Butane blending.

A refiner for any refinery that produces gasoline by blending butane with conventional gasoline or reformulated gasoline or RBOB may meet the sampling and testing requirements of subparts D and E of this part as follows:

(a) Any refinery that blends butane for which the refinery has documents from the butane supplier which demonstrate that the butane is commercial grade, as defined in paragraph (c) of this section, may demonstrate compliance with the standards in subparts D and E of this part based on the properties specified in paragraph (c) of this section, or the properties specified by the butane supplier.

(b)(1) Any refiner that blends butane for which the refiner has documents from the butane supplier which demonstrate that the butane is non-commercial grade, as defined in paragraph (d) of this section, may demonstrate compliance with the standards in subparts D and E of this part based on the properties specified in paragraph (d) of this section, or the properties specified by the butane supplier, provided that the refinery:

(i) Conducts a quality assurance program of sampling and testing the butane obtained from each separate butane supplier which demonstrates that the butane has the properties specified in paragraph (d) of this section; and

(ii) The frequency of sampling and testing for the butane received from each butane supplier must be one sample for every 500,000 gallons of butane received, or one sample every three months, whichever is more frequent.

(2) Where test results indicate the butane does not meet the requirements in paragraph (b)(1) of this section, the refiner may:

(i) Blend the butane with conventional gasoline, or reformulated gasoline that has been downgraded to conventional gasoline, provided that the equivalent emissions performance of the butane batch, as determined using the provisions in § 80.101(g)(3), meets the refinery's standards under § 80.101;

(ii) Blend the butane with reformulated gasoline or RBOB, provided that the final batch of butane blended with reformulated gasoline or RBOB meets the per-gallon standards in § 80.41, as determined using the test methods in § 80.46.

(c) Commercial grade butane is defined as butane for which test results demonstrate that the butane is 95% pure and has the following properties:

olefins ≤1.0 vol%
aromatics ≤2.0 vol%
benzene ≤0.03 vol%
sulfur ≤140 ppm until December 31, 2003; ≤120 ppm in 2004; ≤30 ppm beginning January 1, 2005 and thereafter

(d) Non-commercial grade butane is defined as butane for which test results demonstrate the butane has the following properties:

olefins ≤10.0 vol%
aromatics ≤2.0 vol%
benzene ≤0.03 vol%
sulfur ≤140 ppm until December 31, 2003; ≤120 ppm in 2004; ≤30 ppm beginning January 1, 2005 and thereafter

(e)(1) When butane is blended with conventional gasoline under this section during the period May 1 through September 15, the refiner shall demonstrate through sampling and testing, using the test method for Reid vapor pressure in § 80.46, that each batch of conventional gasoline blended with butane meets the volatility standards specified in § 80.27.

(2) Butane may not be blended with any reformulated gasoline or RBOB during the period April 1 through September 30, or with any reformulated gasoline or RBOB designated as VOC-controlled, under this section.

(f) When butane is blended with conventional gasoline or reformulated gasoline or RBOB under this section, product transfer documents which accompany the gasoline blended with butane must comply with all of the requirements of § 80.77 or § 80.106, as appropriate.

(g) Butane blended with reformulated gasoline or RBOB or conventional gasoline during a period of up to one month may be included in a single batch for purposes of reporting to EPA, however, commercial grade butane and non-commercial grade butane must be reported as separate batches.

(h) Where a refiner chooses to include butane blended with gasoline in the refinery's annual average compliance calculations:

(1) In the case of butane blended with conventional gasoline, the equivalent emissions performance of the butane must be calculated in accordance with the provisions of § 80.101(g)(3). For purposes of this paragraph (i)(1), the property values in § 80.82(c) or (d), as appropriate, may be used;

(2) In the case of butane blended with reformulated gasoline or RBOB, compliance with the reformulated gasoline standards may not be demonstrated using the provisions of this section;

(3) All butane blended into gasoline during the annual averaging period must be included in annual average compliance calculations for the refinery.

[70 FR 74570, Dec. 15, 2005]

§ 80.83 Renewable oxygenate requirements.

(a) *Definition of renewable oxygenate.* For purposes of subparts D and F of this part, renewable oxygenate is defined as provided in this paragraph (a).

(1) In the case of oxygenate added to reformulated gasoline or RBOB that is not designated as VOC-controlled or that is not subject to the additional requirements associated with an extended non-commingling season pursuant to § 80.83(i), renewable oxygenate shall be:

(i) An oxygenate that is derived from non-fossil fuel feedstocks; or

(ii) An ether that is produced using an oxygenate that is derived from non-fossil fuel feedstocks.

(2) In the case of oxygenate added to reformulated gasoline or RBOB that is designated as VOC-controlled or that is subject to the additional requirements associated with an extended non-commingling season pursuant to § 80.83(i), renewable oxygenate shall be an ether that meets the requirements of paragraph (a)(1)(ii) or (a)(3) of this section.

(3) An oxygenate other than those ethers specified in paragraphs (a)(1) or (a)(2) of this section may be considered a renewable oxygenate if the Administrator approves a petition to that effect. The Administrator may approve such a petition if it is demonstrated to the satisfaction of the Administrator that the oxygenate does not cause volatility increases in gasoline that are non-linear in nature (i.e., a non-linear vapor pressure blending curve). The Administrator may approve a petition subject to any appropriate conditions or limitations.

(4)(i) Oxygenate shall be renewable only if the refiner, importer, or oxygenate blender who uses the oxygenate is able to establish in the form of documentation that the oxygenate was produced from a non-fossil fuel feedstock.

(ii)(A) Any person who produces renewable oxygenate, as defined in paragraph (a)(1) of this section, or who stores, transports, transfers, or sells such renewable oxygenate, and where such renewable oxygenate is intended to be used in the production of gasoline, shall maintain documents that state the renewable source of the oxygenate, and shall supply to any transferee of the oxygenate documents which state the oxygenate is from a renewable source.

(B) Any person who imports oxygenate that is represented by the importer to be renewable oxygenate, as defined in paragraph (a) of this section, shall maintain documents, obtained from the person who produced the oxygenate, that include a certification signed by the owner or chief executive officer of the company that produced the oxygenate that states:

(*1*) The nature of the feedstock for the oxygenate; and

(*2*) A description of the manner in which the oxygenate meets the renewable definition under paragraph (a) of this section.

(iii) No person may represent any oxygenate as renewable unless the oxygenate meets the renewable definition under paragraph (a) of this section.

(5) For purposes of this section, an oxygenate shall be considered to be derived from non-fossil fuel feedstocks only if the oxygenate is:

(i) Derived from a source other than petroleum, coal, natural gas, or peat; or

(ii) Derived from a product:

(A) That was produced using petroleum, coal, natural gas, or peat through a substantial transformation of the fossil fuel;

(B) When the product was initially produced, it was not commonly used to generate energy (e.g. automobile tires); and

(C) The product was sold or transferred for a use other than energy generation, and was later treated as a waste product.

(b) *Renewable oxygenate standard.* (1) The reformulated gasoline and reformulated gasoline produced using RBOB that is produced by any refiner at each refinery, or is imported by any importer, shall contain a volume of renewable oxygenate such that the reformulated gasoline and reformulated gasoline produced using RBOB, on average, has an oxygen content from such renewable oxygenate that is equal to or greater than 0.30 wt% for the period of December 1, 1994 through December 31, 1995, and 0.60 wt% beginning on January 1, 1996.

(2) The averaging period for the renewable oxygenate standard specified in paragraph (b)(1) of this section shall be:

(i) Each calendar year; except that

(ii)Any reformulated gasoline and RBOB that is produced or imported prior to January 1, 1995 shall be averaged with reformulated gasoline and RBOB produced or imported during 1995.

(3)(i) The oxygenate used to meet the standard under paragraph (b)(1) of this section may also be used to meet any oxygen standard under § 80.41; except that

(ii) The renewable oxygenate added by a downstream oxygenate blender shall not be used by any refiner or importer to meet the oxygen standard under § 80.41, except through the transfer of oxygen credits.

(c) *Downstream oxygenate blending using renewable oxygenate.* (1) In the case of any refiner that produces RBOB, or any importer that imports RBOB, the oxygenate that is blended with the RBOB may be included with the refiner's or importer's compliance calculations under paragraph (d) of this section only if:

(i) The oxygenate meets the applicable renewable oxygenate definition under paragraph (a) of this section; and

(ii) The refiner or importer meets the downstream oxygenate blending oversight requirements specified in §§ 80.69(a)(6) and (7); or

(iii)(A) In the case of RBOB designated for ''any renewable oxygenate'' the refiner or importer assumes that ethanol will be blended with the RBOB;

(B) In the case of RBOB designated for ''renewable ether only'' or ''non-VOC controlled renewable ether only '', the refiner or importer assumes that ETBE will be blended with the RBOB; and

(C) In the case of ''any renewable oxygenate,'' ''non-VOC controlled renewable ether only'' and ''renewable ether only RBOB,'' the refiner or importer assumes that the volume of oxygenate added will be such that the resulting reformulated gasoline will have an oxygen content of 2.0 wt%.

(2)(i) No person may combine any oxygenate with RBOB designated as ''any renewable oxygenate'' unless the oxygenate meets the criteria specified in paragraph (a) of this section.

(ii) No person may combine any oxygenate with RBOB designated as ''renewable ether only'' or ''non-VOC controlled renewable ether only'' unless the oxygenate meets the criteria specified in paragraph (a) of this section.

(d) *Compliance calculation.* (1) Any refiner for each of its refineries, and any importer shall, for each averaging period, determine compliance with the renewable oxygenate standard by calculating:

(i) Prior to January 1, 1996, renewable oxygen compliance total using the following formula:

$$CT_{ro} = \left(\sum_{i=1}^{n} V_i \right) * 0.30$$

(ii) Beginning on January 1, 1996, the renewable oxygen compliance total using the following formula:

$$CT_{ro} = \left(\sum_{i=1}^{n} V_i \right) * 0.60$$

where

CT_{ro} = the compliance total for renewable oxygen

V_i = the volume of reformulated gasoline or RBOB batch i

n = the number of batches of reformulated gasoline and RBOB produced or imported during the averaging period

(iii) The renewable oxygen actual total using the following formula:

$$AT_{ro} = \sum_{i=1}^{n} \left(V_i * RO_i \right)$$

where

AT_{ro} = the actual total for renewable oxygen

V_i = the volume of gasoline or RBOB batch i

RO_i = the oxygen content, in wt%, in the form of renewable oxygenate of gasoline or RBOB batch i

n = the number of batches of gasoline or RBOB produced or imported during the averaging period

(iv) Compare the renewable oxygen actual total with the renewable oxygen compliance total.

(2)(i) The actual total must be equal to or greater than the compliance totals to achieve compliance, subject to the credit transfer provisions of paragraph (e) of this section.

(ii) If the renewable oxygen actual total is less than the renewable oxygen compliance total, renewable oxygen credits must be obtained from another refinery or importer in order to achieve compliance.

(iii) The total number of renewable oxygen credits required to achieve compliance is calculated by subtracting the renewable oxygen actual total from the renewable oxygen compliance total.

(iv) If the renewable oxygen actual total is greater than the renewable oxygen compliance total, renewable oxygen credits are generated.

(v) The total number of renewable oxygen credits which may be traded to a refiner for a refinery, or to another importer, is calculated by subtracting the renewable oxygen compliance total from the renewable oxygen actual total.

(e) *Credit transfers*. Compliance with the renewable oxygenate standard specified in paragraph (b)(1) of this section may be achieved through the transfer of renewable oxygen credits, provided that the credits meet the criteria specified in §§ 80.67(h)(1) (i) through (iv) and §§ 80.67(h) (2) and (3).

(f) *Recordkeeping*. Any refiner or importer, or any oxygenate blender who blends oxygenate with any RBOB designated as *''any renewable oxygenate,''* ''non VOC controlled renewable ether only'' or ''renewable ether only'' shall for a period of five years maintain the records specified in this paragraph (f) in a manner consistent with the requirements under § 80.74, and deliver such records to the Administrator upon request. The records shall contain the following information:

(1)(i) Documents demonstrating the renewable nature and source of the oxygenate used, consistent with the requirements of paragraph (a)(3) of this section;

(ii) The volume, type, and purity of any renewable oxygenate used; and

(iii) Product transfer documentation for all renewable oxygenate, reformulated gasoline, or RBOB for which the party is the transferor or transferee.

(2) The requirements of this paragraph (f) shall apply in addition to the recordkeeping requirements specified in § 80.74(e).

(g) *Reporting requirements*. (1) Any refiner for each refinery, or any importer, shall for each batch of reformulated gasoline and RBOB include in the quarterly reports for reformulated gasoline required by § 80.75(a) the total weight percent oxygen and the weight percent oxygen attributable to renewable oxygenate contained in the gasoline, or contained in the RBOB subsequent to oxygenate blending if allowed under paragraph (c) of this section.

(2) Any refiner for each refinery, or any importer, shall submit to the Administrator, with the fourth quarterly report required by § 80.75(a), a report

for all reformulated gasoline and RBOB that was produced or imported during the previous calendar year averaging period, that includes the following information:

(i) The total volume of reformulated gasoline and RBOB;

(ii) The compliance total for renewable oxygen;

(iii) The actual total for renewable oxygen;

(iv) The number of renewable oxygen credits generated as a result of actual total renewable oxygen being greater than compliance total renewable oxygen;

(v) The number of renewable oxygen credits required as a result of actual total renewable oxygen being less than compliance total renewable oxygen;

(vi) The number of renewable oxygen credits transferred to another refinery or importer;

(vii) The number of renewable oxygen credits obtained from another refinery or importer; and

(viii) For any renewable oxygen credits that are transferred from or to another refinery or importer, for any such transfer:

(A) The names, EPA-assigned registration numbers and facility identification numbers of the transferor and transferee of the credits;

(B) The number of renewable oxygen credits that were transferred; and

(C) The date of the transaction.

(h) *Renewable oxygenate requirements for reformulated gasoline used in the State of California.* (1) Any refiner or importer of California gasoline, as defined in § 80.81, shall meet the renewable oxygenate standard specified in paragraph (a) of this section for all reformulated gasoline or RBOB used in any reformulated gasoline covered area as specified in § 80.70.

(2) Any California gasoline shall be presumed to be used in a reformulated gasoline covered area:

(i)(A) If the gasoline is produced at a refinery that is located within a reformulated gasoline covered area; or

(B) If the gasoline is transported to a facility that is located within a reformulated gasoline covered area, or to a facility from which gasoline is transported by truck into a reformulated gasoline covered area; unless

(ii) The refiner or importer is able to establish with documentation that the gasoline was used outside any reformulated gasoline covered area.

(3) Any California gasoline shall be considered to be designated as VOC-controlled (for purposes of paragraph (a)(1) of this section) if the Reid vapor pressure of the gasoline, or RBOB subsequent to oxygenate blending, is intended to meet a standard of:

(i) 7.8 psi or less in the case of gasoline intended for use before March 1, 1996; or

(ii) 7.0 psi or less in the case of gasoline intended for use on or after March 1, 1996.

(i) *Special provisions for shoulder season.* (1) The Governor of any State may petition for an extension of the non-commingling season for any or all reformulated gasoline covered areas within the State pursuant to § 80.70.

(i) Such petition must satisfy the following criteria:

(A) Evidence showing an increase in the market share and/or use of oxygenates which produce commingling-related RVP increases in the area(s) that are covered by the petition;

(B) Evidence demonstrating a pattern of exceedances for the period for which the extension is sought, including ozone monitoring data for the preceding three(3) years of the reformulated gasoline program;

(C) An analysis showing that the pattern of ozone exceedances is likely to continue even with implementation of other ozone air quality control measures and/or programs currently planned by the State; and

(D) Evidence that the responsible State agency or authority has given the public an opportunity for a public hearing and the submission of written comments with respect to the petition.

(ii) Effective data and publication of decision.

(A) If the Administrator determines that the petition meets the requirements of paragraph (i)(1)(i) of this section, to the satisfaction of the Administrator, then EPA shall publish a notice in the FEDERAL REGISTER announcing its intention to establish the non-commingling season as requested by

the Governor, and specifying a tentative effective date.

(*1*) The Administrator shall provide the public with an opportunity for a hearing and the submission of written comments.

(*2*) The tentative effective date will correspond with the first day of the next complete non-commingling season beginning not less than one year after receipt of the petition.

(B) If the Administrator receives adverse comments or information demonstrating to the satisfaction of the Administrator that the criteria of paragraph (i)(1)(i) of this section have not been met, that the tentative effective date is not reasonable, or that other good reasons exist to deny the petition, then the Administrator may reject the Governor's request for an extended non-commingling season, in whole or in part, or may delay the effective date by up to two (2) additional years. Absent receipt of such adverse comments or information, EPA shall publish a notice in the FEDERAL REGISTER announcing its approval of the petition and specifying an effective date for the extended non-commingling season.

(2) In the case of any refiner that produces RBOB, or any importer that imports RBOB, the oxygenate that is blended with the RBOB may be included with the refiner's or importer's compliance calculations under paragraph (d) of this section only if:

(i) The oxygenate meets the applicable renewable oxygenate definition under paragraph (a) of this section; and

(ii) In the case of RBOB designated for ''non VOC controlled ether only'' the refiner or importer assumes that ETBE or other oxygenate that does not exhibit volatility-related commingling effects when mixed with other gasolines and approved by the EPA Administrator under subparagraph (a)(3) of this section will be blended with the RBOB and so labels the transfer documentation.

[59 FR 39290, Aug. 2, 1994]

EFFECTIVE DATE NOTE: At 59 FR 39290, Aug. 2, 1994, § 80.83 was added effective September 1, 1994, except for paragraphs (g) and (h), which would not become effective until approval had been given by the Office of Management and Budget. At 59 FR 60715, Nov. 28, 1994, this section was stayed, effective September 13, 1994. At 70 FR 74571, Dec. 15, 2005, § 80.83 was revised; however, the amendment could not be incorporated because the section is stayed.

§ 80.84 Treatment of interface and transmix.

(a) *Definitions*. For purposes of this section, the following definitions apply:

(1) *Interface* means a volume of petroleum product generated in a pipeline between two adjacent volumes of non-identical petroleum product that consists of a mixture of the two adjacent products.

(2) *Transmix* means an interface that does not meet the specifications for a fuel that can be used or sold, and that is composed solely of any combination of:

(i) Previously certified gasoline (including previously certified gasoline blendstocks that become gasoline solely upon the addition of an oxygenate);

(ii) Distillate fuel; or

(iii) Gasoline blendstocks that are suitable for use as a blendstock without further processing.

(3) *Transmix gasoline product*, or *TGP*, means the gasoline or gasoline blendstock that is produced when transmix is separated into distillate fuel and either gasoline or gasoline blendstock. Gasoline blendstock here includes blendstock that becomes gasoline solely upon the addition of an oxygenate (such as RBOB).

(4) *Transmix processing facility* means any refinery that produces TGP from transmix by distillation or other refining processes, but does not produce gasoline by processing crude oil.

(5) *Transmix processor* means any person who owns, leases, operates, controls or supervises a transmix processing facility.

(6) *Transmix blending facility* means any facility which produces gasoline by blending transmix into gasoline.

(7) *Transmix blender* means any person who owns, leases, operates, controls or supervises a transmix blending facility.

(b) *Designation of gasoline interface by pipeline operators*. (1) Gasoline interface mixtures containing the products below shall be designated by pipeline operators in the following manner:

(i) Interface mixtures of reformulated gasoline or RBOB, and conventional gasoline shall be designated as conventional gasoline;

(ii) Interface mixtures of VOC-controlled reformulated gasoline and non-VOC-controlled reformulated gasoline shall be designated as non-VOC-controlled RFG;

(iii) Interface mixtures of RBOB and reformulated gasoline shall be designated as RBOB; and

(iv) Interface mixtures of reformulated gasoline or RBOB, and blendstock shall be designated as blendstock.

(2) Regardless of gasoline product designation, all gasoline containing interface must meet all downstream standards, including but not limited to any standards and requirements that apply downstream of the refinery in this part and the Clean Air Act.

(c) *Transmix processing*—(1) *TGP sold without further mixing with blendstocks or previously certified gasoline*. (i) Where the TGP meets all standards and requirements that apply to conventional gasoline downstream from the refinery, including but not limited to any standards and requirements in this part and the Clean Air Act, and the TGP is designated and sold as conventional gasoline, the transmix processor may exclude the TGP from compliance calculations for the transmix processing facility under this part Subpart E of this part. Except as required in paragraph (c)(4) of this section, the transmix processor must either include every batch or exclude every batch of this TGP from their compliance calculations for each compliance period;

(ii) Where the TGP is sold as a blendstock, the transmix processor must exclude the TGP from compliance calculations. Pursuant to § 80.101(d)(3), however, TGP which becomes gasoline solely upon the addition of an oxygenate must be included in the compliance calculations for the transmix processing facility under subpart E of this part.

(iii) Where the TGP is designated and sold as reformulated gasoline or RBOB, the transmix processor must fulfill all requirements and standards that apply to a refiner under subpart D of this part and must include the reformulated gasoline or RBOB produced from the transmix in compliance calculations for the transmix processing facility under subpart D of this part.

(2) *TGP blended with blendstocks*. Where the transmix processor mixes the TGP with blendstock(s) to produce reformulated or conventional gasoline or RBOB, the TGP is treated as a blendstock and the transmix processor must fulfill all requirements and standards that apply to a refiner under subpart D or E of this part, as appropriate, and include the gasoline produced in compliance calculations for the transmix processing facility under subpart D or E of this part, as appropriate.

(3) *TGP blended with previously certified gasoline*. (i) Where the TGP meets all the standards and requirements that apply to conventional gasoline downstream from the refinery, including but not limited to any standards and requirements of this part and the Clean Air Act, and the transmix processor mixes the TGP with any previously certified gasoline to produce conventional gasoline, the TGP may be excluded from compliance calculations for the transmix processing facility under subpart E of this part. Except as required in paragraph (c)(4) of this section, the transmix processor must either include every batch or exclude every batch of this TGP from compliance calculations for the transmix processing facility for each compliance period.

(ii) Where the TGP does not meet all standards that apply to conventional gasoline downstream from the refinery, including but not limited to any standards and requirements of this part and the Clean Air Act, and the transmix processor mixes the TGP with any previously certified gasoline to produce conventional gasoline, the TGP is treated as a blendstock and the transmix processor must fulfill all requirements and standards for a refiner under subpart E of this part, for the TGP, and include the TGP in the compliance calculations for the transmix processing facility under subpart E of this part.

(iii) The sampling and testing required under paragraph (c)(3)(ii) of this section may be met using one of the following methods:

(A) Sample and test the TGP prior to blending with previously certified gasoline to determine the volume and properties of the TGP and include each volume of TGP blended with previously certified gasoline as a separate batch in compliance calculations for the transmix processing facility; or

(B) Determine the volume and properties of the previously certified gasoline prior to blending with the TGP and measure the volume and properties of the gasoline subsequent to blending with the TGP. Calculate the volume and properties of the TGP by subtracting the volume and properties of the previously certified gasoline from the volume and properties of the gasoline subsequent to blending, and include each volume of TGP blended with previously certified gasoline as a separate batch in compliance calculations for the transmix processing facility; or

(C) Comply with the requirements in § 80.101(g)(9).

(iv) Where the transmix processor mixes the TGP with any previously certified gasoline to produce reformulated gasoline or RBOB, the TGP is treated as a blendstock and the transmix processor must fulfill all requirements and standards for a refiner under subpart D of this part, for the TGP, and include the TGP in the compliance calculations for the transmix processing facility under subpart D of this part, using the procedures in § 80.65(i).

(4) *Additional requirements for conventional gasoline produced with transmix containing blendstocks.* Notwithstanding paragraphs (c)(1)(i) and (c)(3)(i) of this section, if gasoline is produced at a transmix processing facility from any transmix containing gasoline blendstocks, the transmix processor must include every batch of gasoline produced from transmix in compliance calculations for the transmix processing facility under subpart E of this part for the entire compliance period.

(d) *Transmix blending.* Transmix blenders which fulfill all of the requirements in this paragraph (d) are exempt from the requirements and standards that apply to a refiner under subparts D and E of this part.

(1) Transmix may be blended into any previously certified gasoline, provided that:

(i) The endpoint of the final transmix-blended gasoline does not exceed 437 degrees Fahrenheit as measured by ASTM standard method D 86–01^{e1}, entitled ''Standard Test Method for Distillation of Petroleum Products at Atmospheric Pressure'', which is incorporated by reference. This incorporation by reference was approved by the Director of the Federal Register in accordance with 5 U.S.C. 552(a) and 1 CFR part 51. A copy may be obtained from the American Society for Testing and Materials, 100 Barr Harbor Dr., West Conshohocken, PA 19428–2959. Copies may be inspected at the Air Docket, EPA/DC, EPA West, Room B102, 1301 Constitution Ave., NW., Washington, DC, or at the National Archives and Records Administration (NARA). For information on the availability of this material at NARA, call 202–741–6030 or go to: *http://www.archives.gov/federal_register/code_of_federal_regulations/ibr_locations.htm.*;

(ii) The final transmix-blended gasoline meets all applicable downstream standards; and

(iii) The transmix blender complies with the requirements in §§ 80.74(b)(10), 80.104(b) and 80.213.

(2) The transmix blender must maintain and follow a written quality assurance program designed to assure that the type and amount of transmix blended into previously certified gasoline will not cause violations of the applicable standards in paragraph (d)(1) of this section. Except as set forth in paragraph (d)(3) of this section, as a part of the quality assurance program, transmix blenders shall collect samples of gasoline subsequent to blending transmix, and test the samples to ensure the end-point temperature of the final transmix-blended gasoline does not exceed 437 degrees Fahrenheit, at one of the following rates:

(i) In the case of transmix that is blended in a tank, following each occasion transmix is blended; or

(ii) In the case of transmix that is blended by a computer controlled in-line blending system, the transmix blender shall collect composite samples

of gasoline subsequent to blending transmix at a rate of not less than twice each calendar month during which transmix is blended.

(3) Any transmix blender may petition EPA for approval of a quality assurance program that does not include the minimum sampling and testing requirements in paragraph (d)(2) of this section. In order to seek such an exemption, the transmix blender shall submit a petition to EPA that includes:

(i) A detailed description of the quality assurance procedures to be carried out at each location where transmix is blended into previously certified gasoline, including a description of how the transmix blender proposes to determine the ratio of transmix that can be blended with previously certified gasoline without violating any of the applicable standards in paragraph (d)(1) of this section, and a description of how the transmix blender proposes to determine that the gasoline produced by the transmix blending operation meets the applicable standards.

(ii) If the transmix is blended by a computer controlled in-line blending system, the transmix blender shall also include all of the information required by refiners under § 80.65(f)(4)(i)(A).

(iii) A letter signed by the president, chief operating or chief executive officer of the company, or his/her designee, stating that the information contained in the submission is true to the best of his/her belief must accompany any submission under this paragraph.

(iv) Transmix blenders who seek an exemption under paragraph (d)(3) of this section must comply with any request by EPA for additional information or any other requirements that EPA includes as part of the exemption. However, they may withdraw their exemption petition or approved exemption at any time, upon notice to EPA.

(v) EPA reserves the right to modify the requirements of an exemption under paragraph (d)(3) of this section, in whole or in part, at any time, if EPA determines that the transmix blender's operation does not effectively or adequately control, monitor or document the end-point temperature of the gasoline produced, or if EPA determines that any other circumstance exists which merits modification of the requirements of an exemption. If EPA finds that a transmix blender provided false or inaccurate information in any submission required for an exemption under this section, upon notification from EPA, the transmix blender's exemption will be void ab initio.

(4) In the event the test results for any sample collected pursuant to a quality assurance program indicate the gasoline does not comply with any of the applicable standards in paragraph (d)(1) of this section, the transmix blender shall:

(i) Immediately take steps to stop the sale of the gasoline that was sampled;

(ii) Take steps which are reasonably calculated to determine the cause of the noncompliance and to prevent future instances of noncompliance;

(iii) Inform EPA of the noncompliance; and

(iv) If the transmix was blended by a computer controlled in-line blending system, increase the rate of sampling and testing to a rate of not less than once per week and continue the increased frequency of sampling and testing until the results of ten consecutive samples and tests indicate the gasoline complies with applicable standards, at which time the sampling and testing may be conducted at the original frequency;

(5) Any transmix blender who blends transmix into previously certified gasoline and who does not meet the requirements under this paragraph (d) shall meet all requirements and standards that apply to a refiner under subparts D and E of this part, other than this section and §§ 80.74(b)(10), and 80.104(b).

(e) The provisions of paragraphs (c) and (d) of this section also apply to mixtures of gasoline and distillate fuel:

(1) Produced by unintentionally combining gasoline and distillate fuel in a tank.

(2) Produced from normal business operations at terminals or pipelines, such as gasoline or distillate fuel drained from a tank, or drained from piping or hoses used to transfer gasoline or distillate fuel to tanks or trucks, or gasoline or distillate fuel discharged from a safety relief valve.

(f) Any transmix processor or transmix blender who adds a feedstock to their transmix other than gasoline, distillate fuel or gasoline blendstocks from pipeline interface must meet all requirements and standards that apply to a refiner under subparts D and E of this part, other than this section and §§ 80.74(b)(10), and 80.104(b), for all gasoline they produce during a compliance period.

[71 FR 31961, June 2, 2006]

§§ 80.85–80.89 [Reserved]

Subpart E—Anti-Dumping

SOURCE: 59 FR 7860, Feb. 16, 1994, unless otherwise noted.

§ 80.90 Conventional gasoline baseline emissions determination.

(a) *Annual average baseline values.* For any facility of a refiner or importer of conventional gasoline, the annual average baseline values of the facility's exhaust benzene emissions, exhaust toxics emissions, NO_X emissions, sulfur, olefins and T90 shall be determined using the following equation:

$$\text{BASELINE} = \frac{\text{SUMRBASE} \times \text{SUMRVOL} + \text{WNTRBASE} \times \text{WNTRVOL}}{\text{SUMRVOL} + \text{WNTRVOL}}$$

where

BASELINE = annual average baseline value of the facility,

SUMRBASE = summer baseline value of the facility,

SUMRVOL = summer baseline gasoline volume of the facility, per § 80.91,

WNTRBASE = winter baseline value of the facility,

WNTRVOL = winter baseline gasoline volume of the facility, per § 80.91.

(b) *Baseline exhaust benzene emissions—simple model.* (1) Simple model exhaust benzene emissions of conventional gasoline shall be determined using the following equation:

$$\text{EXHBEN} = (1.884 + 0.949 \times \text{BZ} + 0.113 \times (\text{AR} - \text{BZ}))$$

where

EXHBEN = exhaust benzene emissions,

BZ = fuel benzene value in terms of volume percent (per § 80.91), and

AR = fuel aromatics value in terms of volume percent (per § 80.91).

(2) The simple model annual average baseline exhaust benzene emissions for any facility of a refiner or importer of conventional gasoline shall be determined as follows:

(i) The simple model baseline exhaust benzene emissions shall be determined separately for summer and winter using the facility's oxygenated individual baseline fuel parameter values for summer and winter (per § 80.91), respectively, in the equation specified in paragraph (b)(1) of this section.

(ii) The simple model annual average baseline exhaust benzene emissions of the facility shall be determined using the emissions values determined in paragraph (b)(2)(i) of this section in the equation specified in paragraph (a) of this section.

(c) *Baseline exhaust benzene emissions—complex model.* The complex model annual average baseline exhaust benzene emissions for any facility of a refiner or importer of conventional gasoline shall be determined as follows:

(1) The summer and winter complex model baseline exhaust benzene emissions shall be determined separately using the facility's oxygenated individual baseline fuel parameter values for summer and winter (per § 80.91), respectively, in the appropriate complex model for exhaust benzene emissions described in § 80.45.

(2) The complex model annual average baseline exhaust benzene emissions of the facility shall be determined using the emissions values determined in paragraph (c)(1) of this section in the equation specified in paragraph (a) of this section.

(d) *Baseline exhaust toxics emissions.* The annual average baseline exhaust

toxics emissions for any facility of a refiner or importer of conventional gasoline shall be determined as follows:

(1) The summer and winter baseline exhaust emissions of benzene, formaldehyde, acetaldehyde, 1,3-butadiene, and polycyclic organic matter shall be determined using the oxygenated individual baseline fuel parameter values for summer and winter (per § 80.91), respectively, in the appropriate complex model for each exhaust toxic (per § 80.45).

(2) The summer and winter baseline total exhaust toxics emissions shall be determined separately by summing the summer and winter baseline exhaust emissions of each toxic (per paragraph (d)(1) of this section), respectively.

(3) The annual average baseline exhaust toxics emissions of the facility shall be determined using the emissions values determined in paragraph (d)(2) of this section in the equation specified in paragraph (a) of this section.

(e) *Baseline NO_X emissions*. The annual average baseline NO_X emissions for any facility of a refiner or importer of conventional gasoline shall be determined as follows:

(1) The summer and winter baseline NO_X emissions shall be determined using the baseline individual baseline fuel parameter values for summer and winter (per § 80.91), respectively, in the appropriate complex model for NO_X (per § 80.45).

(2) The annual average baseline NO_X emissions of the facility shall be determined using the emissions values determined in paragraph (e)(1) of this section in the equation specified in paragraph (a) of this section.

(3) The requirements specified in paragraphs (e) (1) and (2) of this section shall be determined separately using the oxygenated and nonoxygenated individual baseline fuel parameters, per § 80.91.

(f) *Applicability of Phase I and Phase II models*. The requirements of paragraphs (d) and (e) of this section shall be determined separately for the applicable Phase I and Phase II complex models specified in § 80.45.

(g) *Calculation accuracy*. Emissions values calculated per the requirements of this section shall be determined to four (4) significant figures. Sulfur, olefin and T90 values calculated per the requirements of this section shall be determined to the same number of decimal places as the corresponding value listed in § 80.91(c)(5).

[59 FR 7860, Feb. 16, 1994, as amended at 59 FR 36965, July 20, 1994]

§ 80.91 Individual baseline determination.

(a) *Baseline definition*. (1) The ''baseline'' or ''individual baseline'' of a refinery, refiner or importer, as applicable, shall consist of:

(i) An estimate of the quality, composition and volume of its 1990 gasoline, or allowable substitute, based on the requirements specified in §§ 80.91 through 80.93; and

(ii) Its baseline emissions values calculated per paragraph (f) of this section.

(2)(i) The quality and composition of the 1990 gasoline of a refinery, refiner or importer, as applicable, shall be the set of values of the following fuel parameters: benzene content; aromatic content; olefin content; sulfur content; distillation temperature at 50 and 90 percent by volume evaporated; percent evaporated at 200 °F and 300 °F; oxygen content; RVP.

(ii) A refiner, per paragraph (b)(3)(i) of this section, shall also determine the API gravity of its 1990 gasoline.

(3) The methodology outlined in this section shall be followed in determining a baseline value for each fuel parameter listed in paragraph (a)(2) of this section.

(b) *Requirements for refiners, blenders and importers*—(1) *Requirements for producers of gasoline and gasoline blendstocks*. (i) A refinery engaged in the production of gasoline blendstocks from crude oil and/or crude oil derivatives, and the subsequent mixing of those blendstocks to form gasoline, shall have its baseline fuel parameter values determined from Method 1, 2 and/or 3-type data as described in paragraph (c) of this section, provided the refinery was in operation for at least 6 months in 1990.

(ii) A refinery which was in operation for at least 6 months in 1990, was shut down after 1990, and which restarts

after June 15, 1994, and for which insufficient 1990 and post-1990 data was collected prior to January 1, 1995 from which to determine an individual baseline, shall have the values listed in paragraph (c)(5) of this section as its individual baseline parameters.

(iii) A refinery which was in operation for less than 6 months in 1990 shall have the values listed in paragraph (c)(5) of this section as its individual baseline parameters.

(2) *Requirements for producers or importers of gasoline blendstocks only*. A refiner or importer of gasoline blendstocks which did not produce or import gasoline in 1990 and which produces or imports post-1994 gasoline shall have the values listed in paragraph (c)(5) of this section as its individual baseline parameters.

(3) *Requirements for purchasers of gasoline and/or gasoline blendstocks*. (i) A refiner or refinery, as applicable, solely engaged in the production of gasoline from gasoline blendstocks and/or gasoline which are simply purchased and blended to form gasoline shall have its individual baseline determined using Method 1-type data (per paragraph (c) of this section) from every batch of 1990 gasoline.

(ii) If Method 1-type data on every batch of the refiner's or refinery's 1990 gasoline does not exist, that refiner or refinery shall have the values listed in paragraph (c)(5) of this section as its individual baseline parameters.

(4) *Requirements for importers of gasoline and/or gasoline blendstocks*. (i) An importer of gasoline shall determine an individual baseline value for each fuel parameter listed in paragraph (a)(2) of this section using Method 1-type data on every batch of gasoline imported by that importer into the United States in 1990.

(ii) An importer which is also a foreign refiner must determine its individual baseline using Method 1, 2 and/or 3-type data (per paragraph (c) of this section) if it imported at least 75 percent, by volume, of the gasoline produced at its foreign refinery in 1990 into the United States in 1990.

(iii) An importer which cannot meet the criteria of paragraphs (b)(4)(i) or (ii) of this section for baseline determination shall have the parameter values listed in paragraph (c)(5) of this section as its individual baseline parameter values.

(5) *Requirements for exporters of gasoline and/or gasoline blendstocks*. A refiner shall not include quality or volume data on its 1990 exports of gasoline blendstocks or gasoline in its baseline determination.

(c) *Data types*—(1) *Method 1-type data*. (i) Method 1-type data shall consist of quality (composition and property data) and volume records of gasoline produced in or shipped from the refinery in 1990, excluding exported gasoline. The measured fuel parameter values and volumes of batches, or shipments if not batch blended, shall be used except that data on produced gasoline which was also shipped shall be included only once.

(ii) Gasoline blendstock which left a facility in 1990 and which could become gasoline solely upon the addition of oxygenate shall be included in the baseline determination.

(A) Fuel parameter values of such blendstock shall be accounted for as if the gasoline blendstock were blended with ten (10.0) volume percent ethanol.

(B) If the refiner or importer can provide evidence that such gasoline blendstock was not blended per paragraph (c)(1)(ii)(A) of this section, and that such gasoline blendstock was blended with another oxygenate or a different volume of ethanol, the fuel parameter values of the final gasoline (including oxygenate) shall be included in the baseline determination.

(C) If the refiner or importer can provide evidence that such gasoline blendstock was not blended per paragraph (c)(1)(ii)(A) or (B) of this section, and that such gasoline blendstock was sold with out further changes downstream, the fuel parameter values of the original product shall be included in the baseline determination.

(iii) Data on 1990 gasoline purchased or otherwise received, including intracompany transfers, shall not be included in the baseline determination of a refiner's or importer's facility if the gasoline exited the receiving refinery unchanged from its arrival state.

(2) *Method 2-type data*. Method 2-type data shall consist of 1990 gasoline blendstock quality data and 1990

blendstock production records, specifically the measured fuel parameter values and volumes of blendstock used in the production of gasoline within the refinery. Blendstock data shall include volumes purchased or otherwise received, including intracompany transfers, if the volumes were blended as part of the refiner's or importer's 1990 gasoline. Henceforth in §§ 80.91 through 80.93, ''blendstock(s)'' or ''gasoline blendstock(s)'' shall include those products or streams commercially blended to form gasoline.

(3) *Method 3-type data.* (i) Method 3-type data shall consist of post-1990 gasoline blendstock and/or gasoline quality data and 1990 blendstock and gasoline production records, specifically the measured fuel parameter values and volumes of blendstock used in the production of gasoline within the refinery. Blendstock data shall include volumes purchased or otherwise received, including intracompany transfers, if the volumes were blended as part of the refiner's or importer's 1990 gasoline.

(ii) In order to use Method 3-type data, the refiner or importer must do all of the following:

(A) Include a detailed discussion comparing its 1990 and post-1990 refinery operations and all other differences which would cause the 1990 and post-1990 fuel parameter values to differ; and

(B) Perform the appropriate calculations so as to adjust for the differences determined in paragraph (c)(3)(ii)(A) of this section; and

(C) Include a narrative, discussing the methodology and reasoning for the adjustments made per paragraph (c)(3)(ii)(B) of this section.

(iii) In order to use post-1990 gasoline data, either of the following must be shown for each blendstock-type included in 1990 gasoline, excluding butane:

(A) The post-1990 volumetric fraction of a blendstock is within (±)10.0 percent of the volumetric fraction of that blendstock in 1990 gasoline. For example, if a 1990 blendstock constituted 30 volume percent of 1990 gasoline, this criterion would be met if the post-1990 volumetric fraction of the blendstock in post-1990 gasoline was 27.0–33.0 volume percent.

(B) The post-1990 volumetric fraction of a blendstock is within (±)2.0 volume percent of the absolute value of the 1990 volumetric fraction. For example, if a 1990 blendstock constituted 5 volume percent of 1990 gasoline, this criterion would be met if the post-1990 volumetric fraction of the blendstock in post-1990 gasoline was 3–7 volume percent.

(iv) If using post-1990 gasoline data, post-1990 gasoline blendstock which left a facility and which could become gasoline solely upon the addition of oxygenate shall be included in the baseline determination, per the requirements specified in paragraph (c)(1)(ii) of this section.

(4) *Hierarchy of data use.* (i) A refiner or importer must determine a baseline fuel parameter value using only Method 1-type data if sufficient Method 1-type data is available, per paragraph (d)(1)(ii) of this section.

(ii) If a refiner has insufficient Method 1-type data for a baseline parameter value determination, it must supplement that data with all available Method 2-type data, until it has sufficient data, per paragraph (d)(1)(iii) of this section.

(iii) If a refiner has insufficient Method 1- and Method 2-type data for a baseline parameter value determination, it must supplement that data with all available Method 3-type data, until it has sufficient data, per paragraph (d)(1)(iii) of this section.

(iv) The protocol for the determination of baseline fuel parameter values in paragraphs (c)(4)(i) through (iii) of this section shall be applied to each fuel parameter one at a time.

(5) *Anti-dumping statutory baseline.* (i) The summer anti-dumping statutory baseline shall have the set of fuel parameter values identified as ''summer'' in § 80.45(b)(2). The anti-dumping summer API gravity shall be 57.4 °API.

(ii) The winter anti-dumping statutory baseline shall have the set of fuel parameter values identified as ''winter'' in § 80.45(b)(2), except that winter RVP shall be 8.7 psi. The anti-dumping winter API gravity shall be 60.2 API.

(iii) The annual average anti-dumping statutory baseline shall have the following set of fuel parameter values:

Benzene, volume percent—1.60

Aromatics, volume percent—28.6
Olefins, volume percent—10.8
RVP, psi—8.7
T50, degrees F—207
T90, degrees F—332
E200, percent—46
E300, percent—83
Sulfur, ppm—338
API Gravity, °API—59.1

(iv) The annual average anti-dumping statutory baseline shall have the following set of emission values:

Exhaust benzene emissions, simple model—6.45
Exhaust benzene emissions, complex model—33.03 mg/mile
Exhaust toxics emissions, Phase I—50.67 mg/mile
Exhaust toxics emissions, Phase II—104.5 mg/mile
NO_X emissions, Phase I—714.4 mg/mile
NO_X emissions, Phase II—1461. mg/mile

(d) *Data collection and testing requirements*—(1) *Minimum sampling requirements*—(i) *General requirements*. (A) Data shall have been obtained for at least three months of the refiner's or importer's production of summer gasoline and at least three months of its production of winter gasoline. When method 1 per batch RVP data is available, a month is considered equivalent to 4 weeks of seasonal data.

(*1*) Method 1, per batch, actual RVP data will be used to define that batch as either summer fuel or winter fuel. Summer fuel is defined as fuel produced and intended for sale to satisfy Federal summer volatility standards. When such per batch actual RVP data is not available, data is allocated per month as follows. A summer month is defined as any month during which more than 50 percent (by volume) of the gasoline produced by a refiner met the Federal summer gasoline volatility requirements. Winter shall be any month which could not be considered a summer month under this definition.

(*2*) The three months which compose the summer and the winter data do not have to be consecutive nor within the same year.

(*3*) If, in 1990, a refiner marketed all of its gasoline only in an area or areas which experience no seasonal changes relative to gasoline requirements, e.g., Hawaii, only 3 months of data are required.

(B) Once the minimum sampling requirements have been met, data collection may cease. Additional data may only be included for the remainder of the calendar year in which the minimum sampling requirements were met. In any case, all data collected through the date of collection of the last data point included in the determination of a baseline fuel parameter value must be utilized in the baseline determination of that fuel parameter.

(C) Less than the minimum requirements specified in paragraph (d)(1) of this section may be allowed, upon petition and approval (per § 80.93), if it can be shown that the available data is sufficient in quality and quantity to use in the baseline determination.

(ii) *Method 1 sampling requirements*. At least half of the batches, or shipments if not batch blended, in a calendar month shall have been sampled over a minimum of six months in 1990.

(iii) *Method 2 sampling requirements*. (A) Continuous blendstock streams shall have been sampled at least weekly over a minimum of six months in 1990.

(B) For blendstocks produced on a batch basis, at least half of all batches of a single blendstock type produced in a calendar month shall have been sampled over a minimum of six months in 1990.

(iv) *Method 3 sampling requirements*—(A) *Blendstock data*. (*1*) Post-1990 continuous blendstock streams shall have been sampled at least weekly over a minimum of six months.

(*2*) For post-1990 blendstocks produced on a batch basis, at least half of all batches of a single blendstock type produced in a calendar month shall have been sampled over a minimum of six months.

(B) *Gasoline data*. At least half of the post-1990 batches, or shipments if not batch blended, in a calendar month shall have been sampled over a minimum of six months in order to use post-1990 gasoline data.

(2) *Sampling beyond today's date*. The necessity and actual occurrence of data collection after today's date must be shown.

(3) *Negligible quantity sampling*. Testing of a blendstock stream for a fuel parameter listed in this paragraph

(d)(3) is not required if the refiner can show that the fuel parameter exists in the stream at less than or equal to the amount, on average, shown in this paragraph (d)(3) for that fuel parameter. Any fuel parameter shown to exist in a refinery stream in negligible amounts shall be assigned a value of 0.0:

Aromatics, volume percent—1.0
Benzene, volume percent—0.15
Olefins, volume percent—1.0
Oxygen, weight percent—0.2
Sulfur, ppm—30.0

(4) *Sample compositing*. (i) Samples of gasoline or blendstock which have been retained, but not analyzed, may be mixed prior to analysis and analyzed, as described in paragraphs (d)(4)(iii) (A) through (H) of this section, for the required fuel parameters. Samples must be from the same season and year and must be of a single grade or of a single type of batch-produced blendstock.

(ii) Blendstock samples of a single blendstock type obtained from continuous processes over a calendar month may be mixed together in equal volumes to form one blendstock sample and the sample subsequently analyzed for the required fuel parameters.

(iii)(A) Samples shall have been collected and stored per the method normally employed at the refinery in order to prevent change in product composition with regard to baseline properties and to minimize loss of volatile fractions of the sample.

(B) Properties of the retained samples shall be adjusted for loss of butane by comparing the RVP measured right after blending with the RVP determined at the time that the supplemental properties are measured.

(C) The volume of each batch or shipment sampled shall have been noted and the sum of the volumes calculated to the nearest hundred (100) barrels.

(D) For each batch or shipment sampled, the ratio of its volume to the total volume determined in paragraph (d)(4)(iii)(C) of this section shall be determined to three (3) decimal places. This shall be the volumetric fraction of the shipment in the mixture.

(E) The total minimum volume required to perform duplicate analyses to obtain values of all of the required fuel parameters shall be determined.

(F) The volumetric fraction determined in paragraph (d)(4)(iii)(D) of this section for each batch or shipment shall be multiplied by the value determined in paragraph (d)(4)(iii)(E) of this section.

(G) The resulting value determined in paragraph (d)(4)(iii)(F) of this section for each batch or shipment shall be the volume of each batch or shipment's sample to be added to the mixture. This volume shall be determined to the nearest milliliter.

(H) The appropriate volumes of each shipment's sample shall be thoroughly mixed and the solution analyzed per the methods normally employed at the refinery.

(5) *Test methods*. (i) If the test methods used to obtain fuel parameter values of gasoline and gasoline blendstocks differ or are otherwise not equivalent in precision or accuracy to the corresponding test method specified in §80.46, results obtained under those procedures will only be acceptable, upon petition and approval (per §80.93), if the procedures are or were industry-accepted procedures for measuring the properties of gasoline and gasoline blendstocks at the time the measurement was made.

(ii) Oxygen content may have been determined analytically or from oxygenate blending records.

(A) The fuel parameter values, other than oxygen content, specified in paragraph (a) of this section, must be established as for any blendstock, per the requirements of this paragraph (d).

(B) All oxygen associated with allowable gasoline oxygenates per §80.2(jj) shall be included in the determination of the baseline oxygen content, if oxygen content was determined analytically.

(C) Oxygen content shall be assumed to be contributed solely by the oxygenate which is indicated on the blending records, if oxygen content was determined from blending records.

(6) *Data quality*. Data may be excluded from the baseline determination if it is shown to the satisfaction of the Director of the Office of Mobile Sources, or designee, that it is not within the normal range of values expected for the gasoline or blendstock

sample, considering unit configuration, operating conditions, etc.; due to:

(i) Improper labeling; or

(ii) Improper testing; or

(iii) Other reasons as verified by the auditor specified in § 80.92.

(e) *Baseline fuel parameter determination*—(1) *Closely integrated gasoline producing facilities*. Each refinery or blending facility must determine a set of baseline fuel parameter values per this paragraph (e). A single set of baseline fuel parameters may be determined, upon petition and approval, for two or more facilities under either of the following circumstances:

(i) Two or more refineries or sets of gasoline blendstock-producing units of a refiner engaged in the production of gasoline per paragraph (b)(1) of this section which are geographically proximate to each other, yet not within a single refinery gate, and whose 1990 operations were significantly interconnected.

(ii) A gasoline blending facility operating per paragraph (b)(3) of this section received at least 75 percent of its 1990 blendstock volume from a single refinery, or from one or more refineries which are part of an aggregate baseline per § 80.101(h). The blending facility and associated refinery(ies) must be owned by the same refiner.

(2) *Equations*—(i) *Parameter determinations*. Average baseline fuel parameters shall be determined separately for summer and winter using summer and winter data (per paragraph (d)(1)(i)(A) of this section), respectively, in the applicable equation listed in paragraphs (e)(2) (ii) through (iv) of this section, except that average baseline winter RVP shall be 8.7 psi.

(ii) *Product included in parameter determinations*. In each of the equations listed in paragraphs (e)(2) (ii) through (iv) of this section, the following shall apply:

(A)(*1*) All gasoline produced to meet EPA's 1990 summertime volatility requirements shall be considered summer gasoline. All other gasoline shall be considered winter gasoline, except:

(*2*) Gasoline produced or imported for use in Hawaii, the Commonwealth of Puerto Rico, and the Virgin Islands that is subject to an approved petition under § 80.93(d)(2) shall be considered summer gasoline for purposes of paragraph (e) of this section.

(B)(*1*) Baseline total annual 1990 gasoline volume shall be the larger of the total volume of gasoline produced in or shipped from the refinery in 1990.

(*2*) Baseline summer gasoline volume shall be the total volume of low volatility gasoline which met EPA's 1990 summertime volatility requirements. Baseline summer gasoline volume shall be determined on the same basis (produced or shipped) as baseline total annual gasoline volume.

(*3*) Baseline winter gasoline volume shall be the baseline total annual gasoline volume minus the baseline summer gasoline volume.

(C) Fuel parameter values shall be determined in the same units and at least to the same number of decimal places as the corresponding fuel parameter listed in paragraph (c)(5) of this section.

(D) Volumes shall be reported to the nearest barrel or to the degree at which historical records were kept.

(iii) *Method 1*. Summer and winter Method 1-type data, per paragraph (c)(1) of this section, shall be evaluated separately according to the following equation:

$$X_{bs} = \sum_{g=1}^{p_s} \left(\frac{T_{gs}}{n_s} \times \frac{\sum_{i=1}^{n_{gs}} \left(X_{gis} \times V_{gis} \times SG_{gis} \right)}{\sum_{i=1}^{n_{gs}} \left(V_{gis} \times SG_{gis} \right)} \right)$$

where:

X_{bs} = summer or winter baseline value of fuel parameter X for the refinery

s = season, summer or winter, per paragraph (d)(1)(i)(A)(*1*) of this section

g = separate grade of season s gasoline produced by the refinery in 1990

p_s = total number of different grades of season s gasoline produced by the refinery in 1990

T_{gs} = total volume of season s grade g gasoline produced in 1990

N_s = total volume of season s gasoline produced by the refinery in 1990

i = separate batch or shipment of season s 1990 gasoline sampled

n_{gs} = total number of season s samples of grade g gasoline

X_{gis} = parameter value of grade g gasoline sample i in season s

V_{gis} = volume of season s grade g gasoline sample i

SG_{gis} = specific gravity of season s grade g gasoline sample i (used only for fuel parameters measured on a weight basis)

(iv) *Method 2.* Summer and winter Method 2-type data, per paragraph (c)(2) of this section, shall be evaluated separately according to the following equation:

$$X_{bs}^{m_s} = \sum_{j=1}^{T_{js}} \left\{ \frac{}{N_s} \times \left(\frac{\sum_{i=1}^{n_{js}} X_{ijs}}{n_{js}} + \frac{\sum_{i=1}^{p_{js}} \left(X_{ijs} \times V_{ijs} \times SG_{ijs} \right)}{\sum_{i=1}^{p_{js}} \left(V_{ijs} \times SG_{ijs} \right)} \right) \right\}$$

where

X_{bs} = Summer or winter baseline value of fuel parameter × for the refinery

s = season, summer or winter, per paragraph (d)(1)(i)(A)(*1*) of this section

j = type of blendstock (e.g., reformate, isomerate, alkylate, etc.)

m_s = total types of blendstocks in season s 1990 gasoline

T_{js} = total 1990 volume of blendstock j used in the refinery's season s gasoline

N_s = total volume of season s gasoline produced in the refinery in 1990

i = sample of blendstock j

n_{js} = number of samples of season s blendstock j from continuous process streams

X_{ijs} = parameter value of sample i of season s blendstock j

p_{js} = number of samples of season s batch-produced blendstock j

V_{ijs} = volume of batch of sample i of season s blendstock j

SG_{ijs} = specific gravity of sample i of season s blendstock j (used only for fuel parameters measured on a weight basis)

(v) *Method 3.* (A) Post-1990 Blendstock. Summer and winter Method 3-type data, per paragraph (c)(3) of this section, shall be evaluated separately according to the following equation:

$$X_{bs} = \sum_{j=1}^{m_s} \left(\frac{T_{js}}{N_s} \times \left(\frac{\sum_{i=1}^{n_{js}} X_{ijs}}{n_{js}} + \frac{\sum_{i=1}^{p_{js}} \left(X_{ijs} \times V_{ijs} \times SG_{ijs} \right)}{\sum_{i=1}^{p_{js}} \left(V_{ijs} \times SG_{ijs} \right)} \right) \right)$$

where

X_{bs} = Summer or winter baseline value of fuel parameter X for the refinery

s = season, summer or winter, per paragraph (d)(1)(i)(A)(*1*) of this section

j = type of blendstock (e.g., reformate, isomerate, alkylate, etc.)

m_s = total types of blendstocks in season s 1990 gasoline

T_{js} = total 1990 volume of blendstock j used in the refinery's season s gasoline

N_s = total volume of season s gasoline produced in the refinery in 1990

i=sample of post-1990 season s blendstock j

n_{js} = number of samples of post-1990 season s blendstock j from continuous process streams

X_{ijs} = parameter value of sample i of post-1990 season s blendstock j

p_{js} = number of samples of post-1990 season s batch-produced blendstock j

V_{ijs} = volume of post-1990 batch of sample i of season s blendstock j

SG_{ijs} = specific gravity of sample i of season s blendstock j (used only for fuel parameters measured on a weight basis)

(B) Post-1990 gasoline. Summer and winter Method 3-type gasoline data, per paragraph (c)(3) of this section, shall be evaluated separately according tothe following equation:

$$X_{bs} = \sum_{g=1}^{p_s} \left(\frac{T_{gs}}{N_s} \times \frac{\sum_{i=1}^{n_{gs}} \left(X_{gis} \times V_{gis} \times SG_{gis} \right)}{\sum_{i=1}^{n_{gs}} \left(V_{gis} \times SG_{gis} \right)} \right)$$

where:

X_{bs} = Summer or winter baseline value of fuel parameter X for the refinery

s = season, summer or winter, per paragraph (d)(1)(i)(A)(*1*) of this section

g = separate grade of season s gasoline produced by the refinery in 1990

p_s = total number of different grades of season s gasoline produced by the refinery in 1990

T_{gs} = total volume of season s grade g gasoline produced in 1990

N_s = total volume of season s gasoline produced by the refinery in 1990

i = separate batch or shipment of post-1990 season s gasoline sampled

n_{gs} = total number of samples of post-1990 season s grade g gasoline

X_{gis} = parameter value of post-1990 grade g season s gasoline sample i

V_{gis} = volume of post-1990 season s grade g gasoline sample i

SG_{gis} = specific gravity of post-1990 season s grade g gasoline sample i (used only for fuel parameters measured on a weight basis)

(3) *Percent evaporated determination.* (i) Baseline E200 and E300 values shall be determined directly from actual measurement data.

(ii) If the data per paragraph (e)(3)(i) of this section are unavailable, upon petition and approval, baseline E200 and E300 values shall be determined from the following equations using the baseline T50 and T90 values, if the baseline T50 and T90 values are otherwise acceptable:

$$E200 = 147.91 - (0.49 \times T50)$$
$$E300 = 155.47 - (0.22 \times T90)$$

(4) *Oxygen in the baseline.* Baseline fuel parameter values shall be determined on both an oxygenated and non-oxygenated basis.

(i) If baseline values are determined first on an oxygenated basis, per paragraph (e) of this section, the calculations in paragraphs (e)(4)(i) (A) through (C) of this section shall be performed to determine the value of each baseline parameter on a non-oxygenated basis.

(A) Benzene, aromatic, olefin and sulfur content shall be determined on a non-oxygenated basis according to the following equation:

$$UV = [AV/(100 - OV)] \times 100$$

where

UV = non-oxygenated parameter value

AV = oxygenated parameter value

OV = 1990 oxygenate volume as a percent of total production

(B) Reid vapor pressure (RVP) shall be determined on a non-oxygenated basis according to the following equation:

$$UR = \left[BR - \left\{ \sum_{i=1}^{n} \left(OV_i \times OR_i \right) \right\} / 100 \right] \Bigg/ \left[\left\{ 100 - \sum_{i=1}^{n} OV_i \right\} / 100 \right]$$

where

UR = non-oxygenated RVP (baseline value)
BR = oxygenated RVP
i = type of oxygenate used in 1990
n = total number of different types of oxygenates used in 1990
OV_i = 1990 volume, as a percent of total production, of oxygenate i
OR_i = blending RVP of oxygenate i

(C) Test data and engineering judgement shall be used to estimate T90, T50, E300 and E200 baseline values on a non-oxygenated basis. Allowances shall be made for physical dilution and distillation effects only, and not for refinery operational changes, e.g., decreased reformer severity required due to the octane value of oxygenate which would reduce aromatics.

(ii) If baseline values are determined first on a non-oxygenated basis, the calculations in paragraphs (e)(4)(ii) (A) through (C) of this section shall be performed to determine the value of each baseline parameter on an oxygenated basis.

(A) Benzene, aromatic, olefin and sulfur content shall be determined on an oxygenated basis according to the following equation:

$$AV = UV \times (100 - OV) / 100$$

where

AV = oxygenated parameter value
UV = non-oxygenated parameter value
OV = 1990 oxygenate volume as a percent of total production

(B) Reid vapor pressure (RVP) shall be determined on an oxygenated basis according to the following equation:

$$BR = \left\{ UR \times \left[100 - \sum_{i=1}^{n} (OV_i) \right] + \sum_{i=1}^{n} \left(OV_i \times OR_i \right) \right\} / 100$$

where

BR = oxygenated RVP
UR = non-oxygenated RVP
i = type of oxygenate
n = total number of different types of oxygenates
OV_i = 1990 volume, as a percent of total production, of oxygenate i
OR_i = blending RVP of oxygenate i

(C) Test data and engineering judgement shall be used to estimate T90, T50, E300 and E200 baseline values on an oxygenated basis. Allowances shall be made for physical dilution and distillation effects only, and not for refinery operational changes, e.g., decreased reformer severity required due to the octane value of oxygenate which would reduce aromatics.

(5) *Work-in-progress*. A refiner may, upon petition and approval (per § 80.93), be allowed to account for work- in-progress at one or more of its refineries in 1990 in the determination of that refinery's baseline fuel parameters using Method 1, 2 or 3-type data if it meets the requirements specified in this paragraph (e)(5).

(i) Work-in-progress shall include:

(A) Refinery modification projects involving gasoline blendstock or distillate producing units which were under construction in 1990; or

(B) Refinery modification projects involving gasoline blendstock or distillate producing units which were contracted for prior to or in 1990 such that the refiner was committed to purchasing materials and constructing the project.

(ii) The modifications discussed in paragraph (e)(5)(i) of this section must have been initiated with intent of complying with a legislative or regulatory environmental requirement enacted or promulgated prior to January 1, 1991.

(iii) When comparing emissions or parameter values determined with and without the anticipated work-in-progress adjustment, at least one of the following situations results when comparing annual average baseline values per § 80.90:

(A) A 2.5 percent or greater difference in exhaust benzene emissions (per § 80.90); or

(B) A 2.5 percent or greater difference in total exhaust toxics emissions (per § 80.90(d)); or

(C) A 2.5 percent or greater difference in NO_X emissions (per § 80.90(e)); or

(D) A 10.0 percent or greater difference in sulfur values; or

(E) A 10.0 percent or greater difference in olefin values; or

(F) A 10.0 percent or greater difference in T90 values.

(iv) The requirements of paragraph (e)(5)(iii) of this section shall be determined according to the following equation:

$$\text{Percent Difference} = \frac{\left|\text{Unadjusted Value} - \text{Adjusted Value}\right|}{\text{Unadjusted Value}} \times 100$$

(v) The capital involved in the work-in-progress is at least:

(A) 10.0 percent of the refinery's depreciated book value as of the work-in-progress start-up date; or

(B) $10 million.

(vi) Sufficient data shall have been obtained since reliable operation of the work-in-progress was achieved. Such data shall be used in the determination of the baseline value, due to the work-in-progress, of each of the fuel parameters specified in § 80.91(a)(2)(i) and as verification of the effect of the work-in-progress.

(A) The baseline value, due to the work-in-progress, of each of the fuel parameters specified in § 80.91(a)(2)(i) shall be used in the determination of the emissions specified in § 80.90.

(B) The baseline values of sulfur, olefins and E300, due to the work-in-progress, shall be used in the determination of the emissions specified in § 80.41(j)(3).

(vii) The annual average baseline values of exhaust benzene emissions, per § 80.90(b) and § 80.90(c), exhaust toxics emissions, per § 80.90(d), and NO_X emissions, per § 80.90(e), are the values resulting from the work-in-progress baseline adjustment, not to exceed the larger of:

(A) The unadjusted annual average baseline value of each emission specified in this paragraph (e)(5)(vii); or

(B) The following values:

(*1*) Exhaust benzene emissions, simple model, 6.77;

(*2*) Exhaust benzene emissions, complex model, 34.68 mg/mile;

(*3*) Exhaust toxics emissions, 53.20 mg/mile in Phase I, 109.7 mg/mile in Phase II;

(*4*) NO_X emissions, 750.1 mg/mile in Phase I, 1534. mg/mile in Phase II.

(viii) When compliance is achieved using the simple model, per § 80.41 and/or § 80.101, the baseline values of sulfur, olefins and T90 are the values resulting from the work-in-progress baseline adjustment, not to exceed the larger of:

(A) The unadjusted annual average baseline value of each fuel parameter specified in paragraph (e)(5)(viii) of this section; or

(B) The following values:

(*1*) Sulfur, 355 ppm;

(*2*) Olefins, 11.3 volume percent;

(*3*) T90, 349 °F; or

(C) An adjusted annual average baseline fuel parameter value for sulfur, olefins and T90 such that exhaust emissions of VOC, toxics, and NO_X do not exceed the complex model emission levels specified in paragraph (e)(5)(vii)(B) of this section. In the petition for a work-in-progress adjustment, the refiner shall specify sulfur, olefins and T90 values that meet these emission levels.

(ix) All work-in-progress adjustments must be accompanied by:

(A) Unadjusted and adjusted fuel parameters, emissions, and volumes; and

(B) A description of the current status of the work-in-progress (i.e., the refinery modification project) and the date on which normal operations were achieved; and

(C) A narrative describing the situation, the types of calculations, and the reasoning supporting the types of calculations done to determine the adjusted values.

(6) *Baseline adjustment for extenuating circumstances.* (i) Baseline adjustments may be allowed, upon petition and approval (per §80.93), if a refinery had downtime of a gasoline blendstock producing unit for 30 days or more in 1990 due to:

(A) Unplanned, unforeseen circumstances; or

(B) Non-annual maintenance (turnaround).

(ii) Fuel parameter and volume adjustments shall be made by assuming that the downtime did not occur in 1990.

(iii) All extenuating circumstance adjustments must be accompanied by:

(A) Unadjusted and adjusted fuel parameters, emissions, and volumes; and

(B) A description of the current status of the extenuating circumstance and the date on which normal operations were achieved; and

(C) A narrative describing the situation, the types of calculations, and the reasoning supporting the types of calculations done to determine the adjusted values.

(7) *Baseline adjustments for 1990 JP–4 production.* (i) Baseline adjustments may be allowed, upon petition and approval (per §80.93), if a refinery produced JP–4 jet fuel in 1990 and all of the following requirements are also met:

(A) Refinery type.

(*1*) The refinery is the only refinery of a refiner such that it cannot form an aggregate baseline with another refinery (per §80.101(h)); or

(*2*) The refinery is one refinery of a multi-refinery refiner for which all of the refiner's refineries produced JP–4 in 1990; or

(*3*) The refinery is one refinery of a multi-refinery refiner for which not all of the refiner's refineries produced JP–4 in 1990.

(B) No refinery of a given refiner produces reformulated gasoline. If any refinery of the refiner produces reformulated gasoline at any time in a calendar year, the compliance baselines of all the refiner's refineries receiving a baseline adjustment per this paragraph (e)(7) shall revert to the unadjusted baselines of each respective refinery for that year and all subsequent years.

(C) 1990 JP–4 to gasoline ratio.

(*1*) For a refiner per paragraph (e)(7)(i)(A)(*1*) of this section, the ratio of its refinery's 1990 JP–4 production to its 1990 gasoline production must be greater than or equal to 0.15.

(*2*) For a refiner per paragraph (e)(7)(i)(A)(*2*) of this section, the ratio of each of its refinery's 1990 JP–4 production to its 1990 gasoline production must be greater than or equal to 0.15.

(*3*) For a refiner per paragraph (e)(7)(i)(A)(*3*) of this section, the ratio of the refiner's 1990 JP–4 production to its 1990 gasoline production must be greater than or equal to 0.15, when determined across all of its refineries. Such a refiner must comply with its anti-dumping requirements on an aggregate basis, per §80.101(h), across all of its refineries.

(ii) Fuel parameter and volume adjustments shall be made by assuming that no JP–4 was produced in 1990.

(iii) All adjustments due to 1990 JP–4 production must be accompanied by:

(A) Unadjusted and adjusted fuel parameters, emissions, and volumes; and

(B) A narrative describing the situation, the types of calculations, and the reasoning supporting the types of calculations done to determine the adjusted values.

(8) Baseline adjustments due to increasing crude sulfur content.

(i) Baseline adjustments may be allowed, upon petition and approval (per §80.93), if a refinery meets all of the following requirements:

(A) The refinery does not produce reformulated gasoline. If the refinery produces reformulated gasoline at any time in a calendar year, its compliance baseline shall revert to its unadjusted baseline for that year and all subsequent years;

(B) Has an unadjusted baseline sulfur value which is less than or equal to 50 parts per million (ppm);

(C) Is not aggregated with one or more other refineries (per § 80.101(h)). If a refinery which received an adjustment per this paragraph (e)(8) subsequently is included in an aggregate baseline, its compliance baseline shall revert to its unadjusted baseline for that year and all subsequent years;

(D) Can show that installation of the refinery units necessary to process higher sulfur crude oil supplies to comply with the refinery's unadjusted baseline would cost at least $10 million or be greater than or equal to 10 percent of the depreciated book value of the refinery as of January 1, 1995;

(E) Can show that it could not reasonably or economically obtain crude oil from an alternative source that would permit it to produce conventional gasoline which would comply with its unadjusted baseline;

(F) Has experienced an increase of greater than or equal to 25 percent in the average sulfur content of the crude oil used in the production of gasoline in the refinery since 1990, calculated as follows:

$$\frac{(\mathrm{CSHI} - \mathrm{CS90})}{\mathrm{CS90}} \times 100 = \mathrm{CS\%CHG}$$

where:

CSHI = highest annual average crude sulfur (in ppm), of the crude slates used in the production of gasoline, determined over the years 1991–1994;

CS90 = 1990 annual average crude slate sulfur (in ppm), of the crude slates used in the production of gasoline;

CS%CHG = percent change in average sulfur content of crude slate;

(G) Can show that gasoline sulfur changes are directly and solely attributable to the crude sulfur change, and not due to alterations in refinery operation nor choice of products.

(ii) The adjusted baseline sulfur value shall be the actual baseline sulfur value, in ppm, plus 100 ppm.

(iii) All adjustments made pursuant to this paragraph (e)(8) must be accompanied by:

(A) Unadjusted and adjusted fuel parameters and emissions; and

(B) A narrative describing the situation, the types of calculations, and the reasoning supporting the types of calculations done to determine the adjusted values.

(9) Baseline adjustment for low sulfur and olefins.

(i) Baseline adjustments may be allowed if a refinery meets all of the following requirements:

(A) The unadjusted annual average baseline sulfur value of the refinery is less than or equal to 30 parts per million (ppm);

(B) The unadjusted annual average baseline olefin value of the refinery is less than or equal to 1.0 percent by volume (vol%).

(ii) Adjusted baseline values.

(A) The adjusted baseline shall have an annual average sulfur value of 30 ppm, and an annual average olefin value of 1.0 vol%.

(B) The adjusted baseline shall have a summer sulfur value of 30 ppm, and a summer olefin value of 1.0 vol%.

(C) The adjusted baseline shall have a winter sulfur value of 30 ppm, and a winter olefin value of 1.0 vol%.

(f) *Baseline volume and emissions determination*—(1) *Individual baseline volume.* (i) The individual baseline volume of a refinery described in paragraph (b)(1)(i) of this section shall be the larger of the total gasoline volume produced in or shipped from the refinery in 1990, excluding gasoline blendstocks and exported gasoline, and including the oxygenate volume associated with any product meeting the requirements specified in paragraph (c)(1)(ii) of this section.

(ii) Gasoline brought into the refinery in 1990 which exited the refinery, in 1990, unchanged shall not be included in determining the refinery's baseline volume.

(iii) If a refiner is allowed to adjust its baseline per paragraphs (e)(5) through (e)(7) of this section, its individual baseline volume shall be the volume determined after the adjustment.

(iv) The individual baseline volume for facilities deemed closely integrated, per paragraph (e)(1) of this section, shall be the combined 1990 gasoline production of the facilities, so long as mutual volumes are not double-counted, i.e., volumes of blendstock sent from the refinery to the blending facility should not be included in the blending facility's volume.

(v) The baseline volume of a refiner, per paragraph (b)(3) of this section,

shall be the larger of the total gasoline volume produced in or shipped from the refinery in 1990, excluding gasoline blendstocks and exported gasoline.

(vi) The baseline volume of an importer, per paragraph (b)(4) of this section, shall be the total gasoline volume imported into the U.S. in 1990.

(2) *Individual baseline emissions.* (i) Individual annual average baseline emissions (per §80.90) shall be determined for every refinery, refiner or importer, as applicable.

(ii) If the baseline fuel value for aromatics, olefins, and/or benzene (determined per paragraph (e) of this section) is higher than the high end of the valid range limits specified in §80.42(c)(1) if compliance is being determined under the Simple Model, or in §80.45(f)(1)(ii) if compliance is being determined under the Complex Model, then the valid range limits may be extended for conventional gasoline in the following manner:

(A) The new high end of the valid range for aromatics is determined from the following equation:

NAROLIM = AROBASE + 5.0 volume percent

where

NAROLIM = The new high end of the valid range limit for aromatics, in volume percent

AROBASE = The seasonal baseline fuel value for aromatics, in volume percent

(B) The new high end of the valid range for olefins is determined from the following equation:

NOLELIM = OLEBASE + 3.0 volume percent

where

NOLELIM = The new high end of the valid range limit for olefins, in volume percent

OLEBASE = The seasonal baseline fuel value for olefins, in volume percent

(C) The new high end of the valid range for benzene is determined from the following equation:

NBENLIM = BENBASE + 0.5 volume percent

where

NBENLIM = The new high end of the valid range limit for benzene, in volume percent

BENBASE = The seasonal baseline fuel value for benzene, in volume percent

(D) The extension of the valid range is limited to the applicable summer or winter season in which the baseline fuel values for aromatics, olefins, and/or benzene exceed the high end of the valid range as described in paragraph (f)(2)(ii) of this section. Also, the extension of the valid range is limited to use by the refiner whose baseline value for aromatics, olefins, and/or benzene was higher than the valid range limits as described in paragraph (f)(2)(ii) of this section.

(E) Any extension of the Simple Model valid range limits is applicable only to the Simple Model. Likewise any extension of the Complex Model valid range limits is applicable only to the Complex Model.

(F) The valid range extensions calculated in paragraphs (f)(2)(ii)(A), (B), and (C) of this section are applicable to both the baseline fuel and target fuel for the purposes of determining the compliance status of conventional gasolines. The extended valid range limit represents the maximum value for that parameter above which fuels cannot be evaluated with the applicable compliance model.

(G) Under the Simple Model, baseline and compliance calculations shall subscribe to the following limitations:

(*1*) If the aromatics valid range has been extended per paragraph (f)(2)(ii)(A) of this section, an aromatics value equal to the high end of the valid range specified in §80.42(c)(1) shall be used for the purposes of calculating the exhaust benzene fraction.

(*2*) If the fuel benzene valid range has been extended per paragraph (f)(2)(ii)(C) of this section, a benzene value equal to the high end of the valid range specified in §80.42(c)(1) shall be used for the purposes of calculating the exhaust benzene fraction.

(H) Under the Complex Model, baseline and compliance calculations shall subscribe to the following limitations:

(*1*) If the aromatics valid range has been extended per paragraph (f)(2)(ii)(A) of this section, an aromatics value equal to the high end of the valid range specified in §80.45(f)(1)(ii) shall be used for the purposes of calculating emissions performances.

(*2*) If the olefins valid range has been extended per paragraph (f)(2)(ii)(B) of this section, an olefins value equal to the high end of the valid range specified in § 80.45(f)(1)(ii) shall be used for the target fuel for the purposes of calculating emissions performances.

(*3*) If the benzene valid range has been extended per paragraph (f)(2)(ii)(C) of this section, a benzene value equal to the high end of the valid range specified in § 80.45(f)(1)(ii) shall be used for the target fuel for the purposes of calculating emissions performances.

(iii) Facilities deemed closely integrated, per paragraph (e)(1) of this section, shall have a single set of annual average individual baseline emissions.

(iv) Aggregate baselines (per § 80.101(h)) must have the NO_X emissions of all refineries in the aggregate determined on the same basis, using either oxygenated or non-oxygenated baseline fuel parameters.

(3) *Geographic considerations requiring individual conventional gasoline compliance baselines.* (i) Anyone may petition EPA to establish separate baselines for refineries located in and providing conventional gasoline to an area with a limited gasoline distribution system if it can show that the area is experiencing increased toxics emissions due to an ozone nonattainment area opting into the reformulated gasoline program pursuant to section 211(k)(6) of the Act.

(ii) If EPA agrees with the finding of paragraph (f)(4)(i) of this section, it shall require that the baselines of such refineries be separate from refineries not located in the area.

(iii) If two (2) or more of a refiner's refineries are located in the geographic area of concern, the refiner may aggregate the baseline emissions and sulfur, olefin and T90 values of the refineries or have an individual baseline for one or more of the refineries, per paragraph (f)(3) of this section.

(4) *Baseline recalculations.* Aggregate baseline exhaust emissions (per § 80.90) and baseline sulfur, olefin and T90 values and aggregate baseline volumes shall be recalculated under the following circumstances:

(i) A refinery included in an aggregate baseline is entirely shutdown. If the shutdown refinery was part of an aggregate baseline, the aggregate baseline emissions, aggregate baseline sulfur, olefin and T90 values and aggregate volume shall be recalculated to account for the removal of the shutdown refinery's contributions to the aggregate baseline.

(ii) A refinery exchanges owners.

(A) All aggregate baselines affected by the exchange shall be recalculated to reflect the addition or subtraction of the baseline exhaust emissions, sulfur, olefin and T90 values and volumes of that refinery.

(B) The new owner may elect to establish an individual baseline for the refinery or to include it in an aggregate baseline.

(C) If the refinery was part of an aggregate of three or more refineries, the remaining refineries in the aggregate from which that refinery was removed will have a new aggregate baseline. If the refinery was part of an aggregate of only two refineries, the remaining refinery will have an individual baseline.

(g) *Inability to meet the requirements of this section.* If a refiner or importer is unable to comply with one or more of the requirements specified in paragraphs (a) through (f) of this section, it may, upon petition and approval, accommodate the lack of compliance in a reasonable, logical, technically sound manner, considering the appropriateness of the alternative. A narrative of the situation, as well as any calculations and results determined, must be documented.

[59 FR 7860, Feb. 16, 1994, as amended at 59 FR 36966, July 20, 1994; 60 FR 6032, Feb. 1, 1995; 60 FR 40008, Aug. 4, 1995; 62 FR 9883, Mar. 4, 1997; 67 FR 8737, Feb. 26, 2002; 72 FR 60579, Oct. 25, 2007]

§ 80.92 Baseline auditor requirements.

(a) *General requirements.* (1) Each refiner or importer is required to have its individual baseline determination methodology, resulting baseline fuel parameter, volume and emissions values verified by an auditor which meets the requirements described in this section. A refiner or importer which has the anti-dumping statutory baseline as its individual baseline is exempt from this requirement.

(2) An auditor may be an individual or organization, and may utilize contractors and subcontractors to assist in the verification of a baseline.

(3) If an auditor is an organization, one or more persons shall be designated as primary analyst(s). The primary analyst(s) shall meet the requirements described in paragraphs (c) (2) and (3) of this section and shall be responsible for the baseline audit per paragraph (f) of this section.

(b) *Independence*. The auditor, its contractors, subcontractors and their organizations shall be independent of the submitting organization. All of the criteria listed in paragraphs (b) (1) and (2) of this section must be met by every individual involved in substantive aspects of the baseline verification.

(1) *Previous employment criteria*. (i) None of the auditing personnel, including any contractor or subcontractor personnel, involved in the baseline verification for a refiner or importer shall have been employed by the refiner or importer at any time during the three (3) years preceding the date of hire of the auditor by the refiner or importer for baseline verification purposes.

(ii) Auditor personnel may have been a contractor or subcontractor to the refiner or importer, as long as all other criteria listed in this section are met.

(iii) Auditor personnel may also have developed the baseline of the refiner or importer whose baseline they are auditing, but not as an employee (per paragraph (b)(1)(i) of this section). Those involved only in the development of the baseline of the refiner or importer need not meet the requirements specified in this section.

(2) *Financial criteria*. Neither the primary analyst, nor the auditing organization nor any organization or individual which may be contracted or subcontracted to supply baseline verification expertise shall:

(i) Have received more than one quarter of its revenue from the refiner or importer during the year prior to the date of hire of the auditor by the refiner or importer for auditing purposes. Income received from the refiner or importer to develop the baseline being audited is excepted; nor

(ii) Have a total of more than 10 percent of its net worth with the refiner or importer; nor

(iii) Receive compensation for the audit which is dependent on the outcome of the audit.

(c) *Technical ability*. All of the following criteria must be met by the auditor in order to demonstrate its technical capability to perform the baseline audit:

(1) The auditor shall be technically capable of evaluating a baseline determination. It shall have personnel familiar with petroleum refining processes, including associated computational procedures, methods of product analysis and economics, and expertise in conducting the auditing process, including skills for effective data gathering and analysis.

(2) The primary analyst must understand all technical details of the entire baseline audit process.

(3)(i) The primary analyst shall have worked at least five (5) years in either refinery operations or as a consultant for the refining industry.

(ii) If one or more computer models designed for refinery planning and/or economic analysis are used in the verification of an individual baseline, the primary analyst must have at least three (3) years experience working with the model(s) utilized in the verification.

(iii) EPA may, upon petition, waive one or more of the requirements specified in paragraph (c)(3) of this section if the technical capability of the primary analyst is demonstrated to the satisfaction of the Director of the Office of Mobile Sources, or designee.

(d) *Auditor qualification statement*. A statement documenting the qualifications of the auditor, primary analyst(s), contractors, subcontractors and their organizations must be submitted to EPA (Fuel Studies and Standards Branch, Baseline Auditor, U.S. EPA, 2565 Plymouth Rd., Ann Arbor, MI 48105).

(1) *Timing*. (i) The auditor qualification statement may be submitted by the refiner or importer prior to baseline submission (per § 80.93) or by a potential auditor at any time. The auditor will be deemed certified when all

qualifications are met, to the satisfaction of the Director of the Office of Mobile Sources, or designee. If no response is received from EPA within 45 days of application or today's date, whichever is later, the auditor shall be deemed certified.

(ii) The auditor qualification statement may be submitted by the refiner or importer with its baseline submission (per § 80.93). If the auditor does not meet the criteria specified in this section, the baseline submission will not be accepted.

(2) *Content.* The auditor qualification statement must contain all of the following information and may contain additional information which may aid EPA's review of the qualification statement:

(i) The name and address of each person and organization involved in substantive aspects of the baseline audit, including the auditor, primary analyst(s), others within the organization, and contractors and subcontractors;

(ii) The refiners and/or importers for which the auditor, its contractors and subcontractors and their organizations do not meet the independence criteria described in paragraph (b) of this section; and

(iii) The technical qualifications and experience of each person involved in the baseline audit, including a showing that the requirements described in paragraph (c) of this section are met.

(e) *Refiner and importer responsibility.* (1) Each refiner and importer required to have its baseline verified by an auditor (per paragraph (a)(1) of this section) is responsible for utilizing an auditor for baseline verification which meets the requirements specified in paragraphs (b) and (c) of this section.

(2) A refiner's or importer's baseline submission will not be accepted until it has been verified using an auditor which meets the requirements specified in paragraphs (b) and (c) of this section.

(f) *Auditor responsibilities.* (1) The auditor must verify that all baseline submission requirements are fulfilled. This includes, but is not limited to, the following:

(i) Verifying that all data is correctly accounted for;

(ii) Verifying that all calculations are performed correctly;

(iii) Verifying that all adjustments to the data and/or calculations to account for post-1990 data, work-in-progress, and/or extenuating or other circumstances, as allowed per § 80.91, are valid and performed correctly.

(2) The primary analyst shall prepare and sign a statement, to be included in the baseline submission of the refiner or importer, stating that:

(i) He/she has thoroughly reviewed the sampling methodology and baseline calculations; and

(ii) To the best of his/her knowledge, the requirements and intentions of the rulemaking are met in the baseline determination; and

(iii) He/she agrees with the final baseline parameter, volume and emission values listed in the baseline submission.

(3) The auditor may be subject to debarment under U.S.C. 1001 if it displays gross incompetency, intentionally commits an error in the verification process or misrepresents itself or information in the baseline verification.

[59 FR 7860, Feb. 16, 1994, as amended at 67 FR 8737, Feb. 26, 2002]

§ 80.93 Individual baseline submission and approval.

(a) *Submission timing.* (1) Each refiner, blender or importer shall submit two copies of its individual baseline to EPA (Fuel Studies and Standards Branch, Baseline Submission, U.S. EPA, 2565 Plymouth Rd., Ann Arbor, MI 48105) not later than June 1, 1994.

(2) If a refiner must collect data after December 15, 1993 (per § 80.91(d)(2)), it shall submit two copies of its individual baseline to EPA (per § 80.93(a)(1)) by September 1, 1994.

(3)(i) All petitions required for baseline adjustments or methodology deviations will be approved or disapproved by the Director of the Office of Mobile Sources, or designee. All instances where a ''showing'' or other proof is required are also subject to approval by the Director of the Office of Mobile Sources, or designee.

(ii) Petitions, ''showings,'' and other associated proof may be submitted to EPA prior to submittal of the individual baseline (per paragraphs (a)(1)

and (a)(2) of this section). EPA will attempt to review and approve, disapprove or otherwise comment on the petition, etc., prior to the deadline for baseline submittal.

(iii) In the event that EPA does not comment on the petition prior to the deadline for baseline submittal, the refiner or importer must still comply with the applicable baseline submittal deadline.

(iv) Petitions submitted prior to the deadline for baseline submittals shall be submitted to the EPA at the following address: Fuels Studies and Standards Branch, Baseline Petition, U.S. EPA, 2565 Plymouth Road, Ann Arbor, Michigan 48105.

(4) If a baseline recalculation is required per § 80.91(f), documentation and recalculation of all affected baselines shall be submitted to EPA within 30 days of the previous baseline(s) becoming inaccurate due to the circumstances outlined in § 80.91(f).

(b) *Submission content.* (1) Individual baseline submissions shall include, at minimum, the information specified in this paragraph (b).

(i) During its review and evaluation of the baseline submission, EPA may require a refiner or importer to submit additional information in support of the baseline determination.

(ii) Additional information which may assist EPA during its review and evaluation of the baseline may be included at the submitter's discretion.

(2) Administrative information shall include:

(i) Name and business address of the refiner or importer;

(ii) Name, business address and business phone number of the company contact;

(iii) Address and physical location of each refinery, terminal or import facility;

(iv) Address and physical location where documents which are supportive of the baseline determination for each facility are kept;

(3) The chief executive officer statement shall be:

(i) A statement signed by the chief executive officer of the company, or designee, which states that:

(A) The company is complying with the requirements as a refiner, blender or importer, as appropriate;

(B) The data used in the baseline determination is the extent of the data available for the determination of all required baseline fuel parameters;

(C) All calculations and procedures followed per §§ 80.90 through 80.93 have been done correctly;

(D) Proper adjustments have been made to the data or in the calculations, as applicable;

(E) The requirements and intentions of the rulemaking have been met in determining the baseline fuel parameters; and

(F) The baseline fuel parameter values determined for each facility represent that facility's 1990 gasoline to the fullest extent possible.

(ii) A refiner or importer which is permitted to utilize the parameter values specified in § 80.91(c)(5), and does so, shall submit a statement signed by the chief executive officer of the company, or designee, indicating that insufficient data exist for a baseline determination by the types of data allowed for that entity, as specified in § 80.91.

(4) The auditor-related requirements are:

(i) Name, address, telephone number and date of hire of each auditor hired for baseline verification, whether or not the auditor was retained through the baseline approval process.

(ii) Identification of the auditor responsible for the verification. A copy of this auditor's qualification statement, per § 80.92, must be included if the auditor has not been approved by EPA, per § 80.92;

(iii) Indication of the primary analyst(s) involved in each refinery's baseline verification; and

(iv) The signed auditor verification statement, per § 80.92.

(5) The following baseline information for each refinery, refiner or importer, as applicable, shall be provided:

(i) Individual baseline fuel parameter values, on an oxygenated and non-oxygenated basis, and on a summer and winter basis, per § 80.91;

(ii) Individual baseline exhaust emissions shall be shown separately, on a summer, winter and annual average basis (per § 80.90) as follows:

(A) Simple model exhaust benzene emissions;

(B) Complex model exhaust benzene emissions;

(C) Complex model exhaust toxics emissions, for Phase I;

(D) Complex model exhaust NO_X emissions, for Phase I, using oxygenated individual baseline fuel parameters;

(E) Complex model exhaust NO_X emissions, for Phase I, using non-oxygenated individual baseline fuel parameters;

(F) Complex model exhaust toxics emissions, for Phase II;

(G) Complex model exhaust NO_X emissions, for Phase II, using oxygenated individual baseline fuel parameters; and

(H) Complex model exhaust NO_X emissions, for Phase II, using non-oxygenated individual baseline fuel parameters;

(iii) Individual 1990 baseline gasoline volumes, per § 80.91, shall be shown separately on a summer, winter and annual average basis; and

(iv) Blendstock-to-gasoline ratios for each calendar year 1990 through to 1993, per § 80.102.

(6) *Confidential business information.* (i) Upon approval of an individual baseline, EPA will publish the individual annualized baseline exhaust emissions, on an annual average basis, specified in paragraph (b)(5)(ii) of this section. Such individual baseline exhaust emissions shall not be considered confidential. In addition, the reporting information required under § 80.75(b)(2)(ii) (D), (G) and (J), and § 80.105(a)(4)(i) (E), (H) and (K) shall not be considered confidential.

(ii) Information in the baseline submission which the submitter desires to be considered confidential business information (per 40 CFR part 2, subpart B) must be clearly identified. If no claim of confidentiality accompanies a submission when it is received by EPA, the information may be made available to the public without further notice to the submitter pursuant to the provisions of 40 CFR part 2, subpart B.

(7) Information related to baseline determination as specified in § 80.91 and paragraph (c) of this section.

(c) *Additional baseline submission requirements when Method 1-, 2- and/or 3-type data is utilized.* All requirements of this paragraph shall be reported separately for each facility, unless the facilities are closely integrated, per § 80.91.

(1) *General.* The following information shall be provided:

(i) The number of months in 1990 during which the facility was operating;

(ii) 1990 summer gasoline production volume, per § 80.91, total and by grade, for all gasoline produced but not exported;

(iii) 1990 winter gasoline production volume, per § 80.91, total and by grade, for all gasoline produced, excluding gasoline exported; and

(iv) Whether this facility is actually two facilities which are closely integrated, per § 80.91.

(2) *Baseline values.* The following shall be included for each fuel parameter for which a baseline value is required, per § 80.91:

(i) Narrative of the development of the baseline value of the fuel parameter, including discussion of the sampling and calculation methodologies, technical judgment used, effects of petition results on calculated values, and any additional information which may assist EPA in its review of the baseline;

(ii) Identification of the data-type(s), per § 80.91, used in the determination of a given fuel parameter;

(iii) Identification of test method. If not per § 80.46, include a narrative, explain differences and describing adequacy, per § 80.91;

(iv) Documentation that the minimum sampling requirements per § 80.91 have been met;

(v) Petition and narrative, if needed, for use of less than the minimum required data, per § 80.91;

(vi) Identification of instances of sample compositing per § 80.91;

(vii) Identification of streams for which one or more parameter values were deemed negligible per § 80.91; and

(viii) Discussion of the calculation of oxygenated or non-oxygenated fuel parameter values from non-oxygenated or oxygenated values, respectively, per § 80.91.

(3) *Method 1.* If Method 1-type data is utilized in the baseline determination, the following information on 1990 batches of gasoline, or shipments if not batch blended, are required by grade shall be provided:

(i) First and last sampling dates;

(ii) The following shall be indicated separately on a summer and winter basis, by month:

(A) Number of months sampled;

(B) Number of 1990 batches, or shipments if not batch blended;

(C) Total volume of all batches or shipments;

(D) Number of batches or shipments sampled;

(E) Total volume of all batches or shipments sampled;

(F) Baseline fuel parameter value, per § 80.91; and

(iii) A showing that data was available on every batch of 1990 gasoline, if applicable, per § 80.91 (b)(3) or (b)(4).

(4) *Method 2.* If Method 2-type data is utilized in the baseline determination, the following information on each type of 1990 blendstock used in the refinery's gasoline are required, by blendstock type shall be provided:

(i) First and last sampling dates; and

(ii) The following shall be indicated separately on a summer and winter basis, by month:

(A) Number of months sampled;

(B) Each type of blendstock used in 1990 gasoline and total number of blendstocks. Include all blendstocks produced, purchased or otherwise received which were blended to produce gasoline within the facility. Identify all blendstocks not produced in the facility but used in the facility's 1990 gasoline;

(C) Total volume of each blendstock used in gasoline in 1990;

(D) Identification of blendstock streams as batch or continuous;

(E) Number of blendstock samples from continuous blendstock streams;

(F) Number of blendstock samples from batch processes, including volume of each batch sampled; and

(G) Baseline fuel parameter value, per § 80.91.

(5) *Method 3, blendstock data.* The following information on each type of post-1990 gasoline blendstock used in the refinery's gasoline are required, by blendstock type shall be provided:

(i) First and last sampling dates;

(ii) The following shall be indicated separately on a summer and winter basis, by month:

(A) Number of post-1990 months sampled;

(B) Each type of blendstock used in 1990 gasoline and total number of blendstocks. Include all blendstocks produced, purchased or otherwise received which were blended to produce gasoline within the facility. Identify all blendstocks not produced in the facility but used in the facility's 1990 gasoline;

(C) Total volume of each blendstock used in gasoline in 1990;

(D) Identification of post-1990 blendstock streams as batch or continuous;

(E) Number of post-1990 blendstock samples from continuous blendstock streams;

(F) Number of post-1990 blendstock samples from batch processes, including volume of each batch sampled; and

(G) Baseline fuel parameter value, per § 80.91; and

(iii) Support documentation showing that the criteria of § 80.91 for using Method 3-type blendstock data are met.

(6) *Method 3, post-1990 gasoline data.* The following information on post-1990 batches of gasoline, or shipments if not batch blended, are required by grade:

(i) First and last sampling dates;

(ii) The following shall be indicated separately for summer and winter production, by month:

(A) Number of post-1990 months sampled;

(B) Number of post-1990 batches, or shipments if not batch blended;

(C) Total volume of all post-1990 batches or shipments;

(D) Number of post-1990 batches or shipments sampled;

(E) Volume of each post-1990 batch or shipment sampled; and

(F) Baseline fuel parameter value, per § 80.91; and

(iii) Support documentation showing that the criteria of § 80.91 for using post-1990 gasoline data are met.

(7) *Work-in-progress (WIP).* All of the following must be included in support of a WIP adjustment (per § 80.91(e)(5)):

(i) Petition including identification of the specific baseline emission(s) or parameter for which the WIP adjustment is desired;

(ii) Showing that all WIP criteria, per § 80.91(e)(5), are met;

(iii) Unadjusted and adjusted baseline fuel parameters, emissions and volume for the facility; and

(iv) Narrative, per § 80.91 (e)(5).

(8) *Extenuating circumstances.* All of the following must be included in support of an extenuating circumstance adjustment (per § 80.91 (e)(6) through (e)(7)):

(i) Petition including identification of the allowable circumstance, per § 80.91 (e)(6) through (e)(7);

(ii) Showing that all applicable criteria, per § 80.91 (e)(6) through (e)(7), are met;

(iii) Unadjusted and adjusted baseline fuel parameters, emissions and volume for the facility; and

(iv) Narrative, per § 80.91.

(9) *Other baseline information.* Narrative discussing any aspects of the baseline determination not already indicated per the requirements of paragraph (c)(8) of this section shall be provided.

(10) *Refinery information.* The following information, on a summer or winter basis, shall be provided:

(i) Refinery block flow diagram, showing principal refining units;

(ii) Principal refining unit charge rates and capacities;

(iii) Crude types utilized (names, gravities, and sulfur content) and crude charge rates; and

(iv) Information on the following units, if utilized in the refinery:

(A) Catalytic Cracking Unit: conversion, unit yields, gasoline fuel parameter values (per § 80.91(a)(2));

(B) Hydrocracking Unit: unit yields, gasoline fuel parameter values (per § 80.91(a)(2));

(C) Catalytic Reformer: unit yields, severities;

(D) Bottoms Processing Units (including, but not limited to, coking, extraction and hydrogen processing): gasoline stream yields;

(E) Yield structures for other principal units in the refinery (including but not limited to Alkylation, Polymerization, Isomerization, Etherification, Steam Cracking).

(d) *Requirements for a petition applicable to gasoline produced or imported for use in Alaska, Hawaii, the Commonwealth of Puerto Rico, and the Virgin Islands.* (1)(i) Any refiner for any refinery or importer with gasoline produced or imported for use in Alaska in its individual 1990 baseline may petition EPA to establish a separate 1990 baseline for gasoline produced or imported for use in Alaska using the winter Complex Model, and to use the winter statutory baseline values under § 80.91(c)(5) for any gasoline produced or imported for use in Alaska which is in excess of the refinery's or importer's 1990 volume of gasoline produced or imported for use in Alaska for purposes of determining the refinery's or importer's compliance baseline under § 80.101(f)(4).

(ii) Any refiner for any refinery or importer with an individual 1990 baseline which did not include any gasoline produced or imported for use in Alaska in 1990 may petition EPA to establish the refinery's or importer's winter baseline values as the compliance baseline under § 80.101(f)(3) for gasoline which the refiner or importer produces or imports for use in Alaska.

(iii) Any refiner for any refinery or importer subject only to the anti-dumping statutory baseline under § 80.91(c)(5) may petition EPA to have the winter statutory baseline values under § 80.91(c)(5) apply instead for purposes of determining the refinery's or importer's compliance baseline under § 80.101(f)(2) for gasoline which the refiner or importer produces or imports for use in Alaska.

(2)(i) Any refiner for any refinery or importer with gasoline produced or imported for use in Hawaii, and/or the Commonwealth of Puerto Rico, and/or the Virgin Islands in its individual 1990 baseline may petition EPA to establish a separate 1990 baseline for gasoline produced or imported for use in these areas using the summer Complex Model, and to use the summer statutory baseline values under § 80.91(c)(5) for any gasoline produced or imported for use in these areas in excess of the

refinery's or importer's 1990 volume of gasoline produced or imported for use in these areas, for purposes of determining the refinery's or importer's compliance baseline under §80.101(f)(4).

(ii) Any refiner for any refinery or importer with an individual 1990 baseline which did not include any gasoline produced or imported for use in Hawaii, and/or the Commonwealth of Puerto Rico, and/or the Virgin Islands in 1990 may petition EPA to establish the refinery's or importer's summer baseline values as the compliance baseline under §80.101(f)(3) for gasoline which the refiner or importer produces or imports for use in these areas.

(iii) Any refiner or importer subject only to the anti-dumping statutory baseline under §80.91(c)(5) may petition EPA to have the summer statutory baseline values under §80.91(c)(5) apply instead for purposes of determining the refinery's or importer's compliance baseline under §80.101(f)(2) for gasoline which the refiner or importer produces or imports for use in Hawaii, and/or the Commonwealth of Puerto Rico, and/or the Virgin Islands.

(iv) Any petition submitted in accordance with paragraphs (d)(2)(i), (d)(2)(ii) or (d)(2)(iii) of this section shall apply to gasoline produced or imported for use in all of the areas specified in the operative paragraphs.

(3) A petition under paragraphs (d)(1) or (d)(2) of this section must include the following:

(i) Identification of the refiner and refinery or importer;

(ii) EPA company and facility registration numbers issued under §80.76;

(iii) Identification of a contact person; and

(iv) For petitions submitted under paragraphs (d)(1)(i) and (d)(2)(i) of this section:

(A) Revised 1990 individual baseline determination wherein the baseline for gasoline produced or imported for use in Alaska has been evaluated using the winter Complex Model, or gasoline produced or imported for use in Hawaii, and/or the Commonwealth of Puerto Rico, and/or the Virgin Islands has been evaluated using the summer Complex Model, as applicable, with the calculations clearly and fully described and displayed; and

(B) Revised 1990 individual baseline determination for gasoline in the refinery's or importer's original individual 1990 baseline which was not produced or imported for use in Alaska, and/or Hawaii, and/or the Commonwealth of Puerto Rico, and/or the Virgin Islands, as applicable, with the calculations clearly and fully described and displayed.

(C) Baseline auditor agreement with the revised baseline values.

(4) For U.S. Postal delivery, the petition shall be sent to: Attn: RFG Program, Mailstop 6406J, U.S. Environmental Protection Agency, 1200 Pennsylvania Avenue, NW., Washington, DC 20460. For commercial delivery: Attn: RFG Program, 6th Floor (202–343–9038), U.S. Environmental Protection Agency, 1310 L St., NW., Washington, DC 20005.

(5) EPA reserves the right to request additional information. If such information is not forthcoming in a timely manner, the petition will not be approved.

(6) A petition under this section may be submitted at any time during the annual averaging period. The baseline and compliance methods approved in a petition submitted under paragraph (d) of this section shall apply beginning with the annual averaging period in which the petition was approved and shall continue to apply in each annual averaging period thereafter. Once a petition has been approved under this section, the refiner or importer may not revert back to its original baseline.

(7) A refiner for any refinery or importer with an approved petition under paragraph (d)(1) of this section and an approved petition under paragraph (d)(2) of this section will be subject to a separate baseline and baseline volume for its gasoline produced or imported for use in Alaska, and a separate baseline and baseline volume for its gasoline produced or imported for use in Hawaii, the Commonwealth of Puerto Rico and the Virgin Islands.

(8)(i) Any refiner for any refinery or importer must have an approved petition under paragraph (d)(1) of this section in order to use the seasonal baseline and seasonal Complex Model, as

provided in paragraph (d)(1) of this section, for gasoline produced or imported for use in Alaska.

(ii) Any refiner for any refinery or importer must have an approved petition under paragraph (d)(2) of this section in order to use the seasonal baseline and seasonal Complex Model, as provided in paragraph (d)(2) of this section, for gasoline produced or imported for use in Hawaii, the Commonwealth of Puerto Rico, and the Virgin Islands.

(iii) Any new refiner or importer without an individual anti-dumping baseline shall be subject to the annual average anti-dumping statutory baseline under § 80.91(c)(5) unless the refiner or importer petitions for and receives approval of use of a seasonal baseline and seasonal Complex Model under this section.

(9)(i) The provisions of this paragraph (d) shall apply to any refiner, for any refinery, or importer that received approval of a petition under this paragraph (d) prior to November 26, 2007 beginning with the 2008 annual averaging period.

(ii) Any refiner, for any refinery, or importer that received approval of a petition under paragraph (d) of this section prior to November 26, 2007 may petition EPA to withdraw such approval. Such petition must be submitted to EPA by December 31, 2007. A withdrawal of approval under this paragraph is effective beginning with the 2008 annual averaging period and shall remain in effect in each annual averaging period thereafter.

(iii) A refiner or importer with an approved withdrawal under paragraph (d)(9)(i) of this section will be subject to the baseline which was in effect prior to the effective date of the refiner's or importer's approved petition under this paragraph (d). Once a refiner or importer receives approval of a withdrawal of a petition under paragraph (d)(9)(i) of this section the refiner or importer is ineligible to receive approval of a change in baseline under this section.

[59 FR 7860, Feb. 16, 1994, as amended at 59 FR 36968, July 20, 1994; 60 FR 65575, Dec. 20, 1995; 64 FR 30910, June 9, 1999; 72 FR 60579, Oct. 25, 2007]

§ 80.94 Requirements for gasoline produced at foreign refineries.

(a) *Definitions.* (1) A *foreign refinery* is a refinery that is located outside the United States, including the Commonwealth of Puerto Rico, the Virgin Islands, Guam, American Samoa, and the Commonwealth of the Northern Mariana Islands (collectively referred to in this section as ''the United States'').

(2) A *foreign refiner* is a person who meets the definition of refiner under § 80.2(i) for foreign refinery.

(3) *FRGAS* means gasoline produced at a foreign refinery that has been assigned an individual refinery baseline and that is imported into the United States.

(4) *Non-FRGAS* means gasoline that is produced at a foreign refinery that has not been assigned an individual refinery baseline, gasoline produced at a foreign refinery with an individual refinery baseline that is not imported into the United States, and gasoline produced at a foreign refinery with an individual baseline during a year when the foreign refiner has opted to not participate in the FRGAS program under paragraph (c)(3) of this section.

(5) *Certified FRGAS* means FRGAS the foreign refiner intends to include in the foreign refinery's NO_X and exhaust toxics compliance calculations under § 80.101(g), and does include in these compliance calculations when reported to EPA.

(6) *Non-certified FRGAS* means FRGAS that is not certified FRGAS.

(b) *Baseline establishment.* Any foreign refiner may submit to EPA a petition for an individual refinery baseline, under §§ 80.90 through 80.93.

(1) The provisions for baselines as specified in §§ 80.90 through 80.93 shall apply to a foreign refinery, except where provided otherwise in this section.

(2) The baseline for a foreign refinery shall reflect only the volume and properties of gasoline produced in 1990 that was imported into the United States.

(3) A baseline petition shall establish the volume of conventional gasoline produced at a foreign refinery and imported into the United States during the calendar year immediately preceding the year the baseline petition is submitted.

(4) In making determinations for foreign refinery baselines EPA will consider all information supplied by a foreign refiner, and in addition may rely on any and all appropriate assumptions necessary to make such a determination.

(5) Where a foreign refiner submits a petition that is incomplete or inadequate to establish an accurate baseline, and the refiner fails to cure this defect after a request for more information, then EPA shall not assign an individual refinery baseline.

(6) Baseline petitions under this paragraph (b) of this section must be submitted before January 1, 2002.

(c) *General requirements for foreign refiners with individual refinery baselines.* Any foreign refiner of a refinery that has been assigned an individual baseline under paragraph (b) of this section shall designate all gasoline produced at the foreign refinery that is exported to the United States as either certified FRGAS or as non-certified FRGAS, except as provided in paragraph (c)(3) of this section.

(1)(i) In the case of certified FRGAS, the foreign refiner shall meet all requirements that apply to refiners under 40 CFR part 80, subparts D, E and F.

(ii) If the foreign refinery baseline is assigned, or a foreign refiner begins early use of a refinery baseline under paragraph (r) of this section, on a date other than January 1, the compliance baseline for the initial year shall be calculated under § 80.101(f) using an adjusted baseline volume, as follows:

$$AV_{1990} = (D/365) \times V_{1990}$$

where:

AV_{1990} = Adjusted 1990 baseline volume

D = Number of days remaining in the year, beginning with the day the foreign refinery baseline is approved or the day the foreign refiner begins early use of a refinery baseline, whichever is later

V_{1990} = Foreign refinery's 1990 baseline volume.

(2) In the case of non-certified FRGAS, the foreign refiner shall meet the following requirements, except the foreign refiner shall substitute the name ''non-certified FRGAS'' for the names ''reformulated gasoline'' or ''RBOB'' wherever they appear in the following requirements:

(i) The designation requirements in § 80.65(d)(1);

(ii) The recordkeeping requirements in § 80.74 (a), and (b)(3);

(iii) The reporting requirements in § 80.75 (a), (m), and (n);

(iv) The registration requirements in § 80.76;

(v) The product transfer document requirements in § 80.77 (a) through (f), and (j);

(vi) The prohibition in § 80.78(a)(10), (b) and (c); and

(vii) The independent audit requirements in §§ 80.125 through 80.127, 80.128 (a) through (c), and (g) through (i), and 80.130.

(3)(i) Any foreign refiner that has been assigned an individual baseline for a foreign refinery under paragraph (b) of this section may elect to classify no gasoline imported into the United States as FRGAS, provided the foreign refiner notifies EPA of the election no later than November 1 of the prior calendar year.

(ii) An election under paragraph (c)(3)(i) of this section shall:

(A) Be for an entire calendar year averaging period and apply to all gasoline produced during the calendar year at the foreign refinery that is imported into the United States; and

(B) Remain in effect for each succeeding calendar year averaging period, unless and until the foreign refiner notifies EPA of a termination of the election. The change in election shall take effect at the beginning of the next calendar year.

(iii) A foreign refiner who has aggregated refineries under § 80.101(h) shall make the same election under paragraph (c)(3)(i) of this section for all refineries in the aggregation.

(d) *Designation, product transfer documents, and foreign refiner certification.* (1) Any foreign refiner of a foreign refinery that has been assigned an individual baseline shall designate each batch of FRGAS as such at the time the gasoline is produced, unless the foreign refiner has elected to classify no gasoline exported to the United States as FRGAS under paragraph (c)(3)(i) of this section.

(2) On each occasion when any person transfers custody or title to any FRGAS prior to its being imported into

the United States, the following information shall be included as part of the product transfer document information in §§ 80.77 and 80.106:

(i) Identification of the gasoline as certified FRGAS or as non-certified FRGAS; and

(ii) The name and EPA refinery registration number of the refinery where the FRGAS was produced.

(3) On each occasion when FRGAS is loaded onto a vessel or other transportation mode for transport to the United States, the foreign refiner shall prepare a certification for each batch of the FRGAS that meets the following requirements:

(i) The certification shall include the report of the independent third party under paragraph (f) of this section, and the following additional information:

(A) The name and EPA registration number of the refinery that produced the FRGAS;

(B) The identification of the gasoline as certified FRGAS or non-certified FRGAS;

(C) The volume of FRGAS being transported, in gallons;

(D) A declaration that the FRGAS is being included in the compliance baseline calculations under § 80.101(f) for the refinery that produced the FRGAS; and

(E) In the case of certified FRGAS:

(*1*) The values for each parameter required to calculate NO_X and exhaust toxics emissions performance as determined under paragraph (f) of this section; and

(*2*) A declaration that the FRGAS is being included in the compliance calculations under § 80.101(g) for the refinery that produced the FRGAS.

(ii) The certification shall be made part of the product transfer documents for the FRGAS.

(e) *Transfers of FRGAS to non-United States markets*. The foreign refiner is responsible to ensure that all gasoline classified as FRGAS is imported into the United States. A foreign refiner may remove the FRGAS classification, and the gasoline need not be imported into the United States, but only if:

(1)(i) The foreign refiner excludes:

(A) The volume of gasoline from the refinery's compliance baseline calculations under § 80.101(h); and

(B) In the case of certified FRGAS, the volume and parameter values of the gasoline from the compliance calculations under § 80.101(g);

(ii) The exclusions under paragraph (e)(1)(i) of this section shall be on the basis of the parameter and volumes determined under paragraph (f) of this section; and

(2) The foreign refiner obtains sufficient evidence in the form of documentation that the gasoline was not imported into the United States.

(f) *Load port independent sampling, testing and refinery identification*. (1) On each occasion FRGAS is loaded onto a vessel for transport to the United States a foreign refiner shall have an independent third party:

(i) Inspect the vessel prior to loading and determine the volume of any tank bottoms;

(ii) Determine the volume of FRGAS loaded onto the vessel (exclusive of any tank bottoms present before vessel loading);

(iii) Obtain the EPA-assigned registration number of the foreign refinery;

(iv) Determine the name and country of registration of the vessel used to transport the FRGAS to the United States; and

(v) Determine the date and time the vessel departs the port serving the foreign refinery.

(2) On each occasion certified FRGAS is loaded onto a vessel for transport to the United States a foreign refiner shall have an independent third party:

(i) Collect a representative sample of the certified FRGAS from each vessel compartment subsequent to loading on the vessel and prior to departure of the vessel from the port serving the foreign refinery;

(ii) Prepare a volume-weighted vessel composite sample from the compartment samples, and determine the values for sulfur, benzene, gravity, E200 and E300 using the methodologies specified in § 80.46, by:

(A) The third party analyzing the sample; or

(B) The third party observing the foreign refiner analyze the sample;

(iii) Determine the values for aromatics, olefins, RVP and each oxygenate specified in § 80.65(e)(2) for the gasoline loaded onto the vessel, by:

(A) Completing the analysis procedures under paragraph (f)(2)(ii) of this section for the additional parameters; or

(B) Obtaining from the foreign refiner the test results of samples collected from each shore tank containing gasoline that was loaded onto the vessel, and calculating the parameter values for the gasoline loaded onto the vessel from the tank parameter values and the gasoline volume from each such shore tank that was loaded;

(iv) Review original documents that reflect movement and storage of the certified FRGAS from the refinery to the load port, and from this review determine:

(A) The refinery at which the FRGAS was produced; and

(B) That the FRGAS remained segregated from:

(*1*) Non-FRGAS and non-certified FRGAS; and

(*2*) Other certified FRGAS produced at a different refinery, except that certified FRGAS may be combined with other certified FRGAS produced at refineries that are aggregated under § 80.101(h);

(3) The independent third party shall submit a report:

(i) To the foreign refiner containing the information required under paragraphs (f) (1) and (2) of this section, to accompany the product transfer documents for the vessel; and

(ii) To the Administrator containing the information required under paragraphs (f) (1) and (2) of this section, within thirty days following the date of the independent third party's inspection. This report shall include a description of the method used to determine the identity of the refinery at which the gasoline was produced, that the gasoline remained segregated as specified in paragraph (n)(1) of this section, and a description of the gasoline's movement and storage between production at the source refinery and vessel loading.

(4) A person may be used to meet the third party requirements in this paragraph (f) only if:

(i) The person is approved in advance by EPA, based on a demonstration of ability to perform the procedures required in this paragraph (f);

(ii) The person is independent under the criteria specified in § 80.65(f)(2)(iii); and

(iii) The person signs a commitment that contains the provisions specified in paragraph (i) of this section with regard to activities, facilities and documents relevant to compliance with the requirements of this paragraph (f).

(g) *Comparison of load port and port of entry testing.* (1)(i) Any foreign refiner and any United States importer of certified FRGAS shall compare the results from the load port testing under paragraph (f) of this section, with the port of entry testing as reported under paragraph (o) of this section, for the volume of gasoline, for the parameter values for sulfur, benzene, gravity, E200 and E300, and for the NO_X and exhaust toxics emissions performance; except that

(ii) Where a vessel transporting certified FRGAS off loads this gasoline at more than one United States port of entry, and the conditions of paragraph (g)(2)(i) of this section are not met at the first United States port of entry, the requirements of paragraph (g)(1) and (g)(2) of this section do not apply at subsequent ports of entry if the United States importer obtains a certification from the vessel owner or his immediate designee that the vessel has not loaded any gasoline or blendstock between the first United States port of entry and the subsequent port of entry.

(2)(i) The requirements of paragraph (g)(2)(ii) apply if:

(A)(*1*) The temperature-corrected volumes determined at the port of entry and at the load port differ by more than one percent; or

(*2*) For any parameter specified in paragraph (f)(2)(ii) of this section, the values determined at the port of entry and at the load port differ by more than the reproducibility amount specified for the port of entry test result by the American Society of Testing and Materials (ASTM); unless

(B) The NO_X and exhaust toxics emissions performance, in grams per mile, calculated using the port of entry test results, are each equal to or less than

the NO_X and exhaust toxics emissions performance calculated using the load port test results;

(ii) The United States importer and the foreign refiner shall treat the gasoline as non-certified FRGAS, and the foreign refiner shall:

(A) Exclude the gasoline volume and properties from its conventional gasoline NO_X and exhaust toxics compliance calculations under § 80.101(g); and

(B) Include the gasoline volume in its compliance baseline calculation under § 80.101(f), unless the foreign refiner establishes that the United States importer classified the gasoline only as conventional gasoline and not as reformulated gasoline.

(h) *Attest requirements.* The following additional procedures shall be carried out by any foreign refiner of FRGAS as part of the attest engagement for each foreign refinery under 40 CFR part 80, subpart F.

(1) Include in the inventory reconciliation analysis under § 80.128(b) and the tender analysis under § 80.128(c) non-FRGAS in addition to the gasoline types listed in § 80.128 (b) and (c).

(2) Obtain separate listings of all tenders of certified FRGAS, and of non-certified FRGAS. Agree the total volume of tenders from the listings to the gasoline inventory reconciliation analysis in § 80.128(b), and to the volumes determined by the third party under paragraph (f)(1) of this section.

(3) For each tender under paragraph (h)(2) of this section where the gasoline is loaded onto a marine vessel, report as a finding the name and country of registration of each vessel, and the volumes of FRGAS loaded onto each vessel.

(4) Select a sample from the list of vessels identified in paragraph (h)(3) of this section used to transport certified FRGAS, in accordance with the guidelines in § 80.127, and for each vessel selected perform the following:

(i) Obtain the report of the independent third party, under paragraph (f) of this section, and of the United States importer under paragraph (o) of this section.

(A) Agree the information in these reports with regard to vessel identification, gasoline volumes and test results.

(B) Identify, and report as a finding, each occasion the load port and port of entry parameter and volume results differ by more than the amounts allowed in paragraph (g) of this section, and determine whether the foreign refiner adjusted its refinery calculations as required in paragraph (g) of this section.

(ii) Obtain the documents used by the independent third party to determine transportation and storage of the certified FRGAS from the refinery to the load port, under paragraph (f) of this section. Obtain tank activity records for any storage tank where the certified FRGAS is stored, and pipeline activity records for any pipeline used to transport the certified FRGAS, prior to being loaded onto the vessel. Use these records to determine whether the certified FRGAS was produced at the refinery that is the subject of the attest engagement, and whether the certified FRGAS was mixed with any non-certified FRGAS, non-FRGAS, or any certified FRGAS produced at a different refinery that was not aggregated under § 80.101(h).

(5)(i) Select a sample from the list of vessels identified in paragraph (h)(3) of this section used to transport certified and non-certified FRGAS, in accordance with the guidelines in § 80.127, and for each vessel selected perform the following:

(ii) Obtain a commercial document of general circulation that lists vessel arrivals and departures, and that includes the port and date of departure of the vessel, and the port of entry and date of arrival of the vessel. Agree the vessel's departure and arrival locations and dates from the independent third party and United States importer reports to the information contained in the commercial document.

(6) Obtain separate listings of all tenders of non-FRGAS, and perform the following:

(i) Agree the total volume of tenders from the listings to the gasoline inventory reconciliation analysis in § 80.128(b).

(ii) Obtain a separate listing of the tenders under paragraph (h)(6) of this section where the gasoline is loaded onto a marine vessel. Select a sample from this listing in accordance with

the guidelines in § 80.127, and obtain a commercial document of general circulation that lists vessel arrivals and departures, and that includes the port and date of departure and the ports and dates where the gasoline was off loaded for the selected vessels. Determine and report as a finding the country where the gasoline was off loaded for each vessel selected.

(7) In order to complete the requirements of this paragraph (h) an auditor shall:

(i) Be independent of the foreign refiner;

(ii) Be licensed as a Certified Public Accountant in the United States and a citizen of the United States, or be approved in advance by EPA based on a demonstration of ability to perform the procedures required in §§ 80.125 through 80.130 and this paragraph (h); and

(iii) Sign a commitment that contains the provisions specified in paragraph (i) of this section with regard to activities and documents relevant to compliance with the requirements of §§ 80.125 through 80.130 and this paragraph (h).

(i) *Foreign refiner commitments.* Any foreign refiner shall commit to and comply with the provisions contained in this paragraph (i) as a condition to being assigned an individual refinery baseline.

(1) Any United States Environmental Protection Agency inspector or auditor will be given full, complete and immediate access to conduct inspections and audits of the foreign refinery.

(i) Inspections and audits may be either announced in advance by EPA, or unannounced.

(ii) Access will be provided to any location where:

(A) Gasoline is produced;

(B) Documents related to refinery operations are kept;

(C) Gasoline or blendstock samples are tested or stored; and

(D) FRGAS is stored or transported between the foreign refinery and the United States, including storage tanks, vessels and pipelines.

(iii) Inspections and audits may be by EPA employees or contractors to EPA.

(iv) Any documents requested that are related to matters covered by inspections and audits will be provided to an EPA inspector or auditor on request.

(v) Inspections and audits by EPA may include review and copying of any documents related to:

(A) Refinery baseline establishment, including the volume and parameters, and transfers of title or custody, of any gasoline or blendstocks, whether FRGAS or non-FRGAS, produced at the foreign refinery during the period January 1, 1990 through the date of the refinery baseline petition or through the date of the inspection or audit if a baseline petition has not been approved, and any work papers related to refinery baseline establishment;

(B) The parameters and volume of FRGAS;

(C) The proper classification of gasoline as being FRGAS or as not being FRGAS, or as certified FRGAS or as non-certified FRGAS;

(D) Transfers of title or custody to FRGAS;

(E) Sampling and testing of FRGAS;

(F) Work performed and reports prepared by independent third parties and by independent auditors under the requirements of this section, including work papers; and

(G) Reports prepared for submission to EPA, and any work papers related to such reports.

(vi) Inspections and audits by EPA may include taking samples of gasoline or blendstock, and interviewing employees.

(vii) Any employee of the foreign refiner will be made available for interview by the EPA inspector or auditor, on request, within a reasonable time period.

(viii) English language translations of any documents will be provided to an EPA inspector or auditor, on request, within 10 working days.

(ix) English language interpreters will be provided to accompany EPA inspectors and auditors, on request.

(2) An agent for service of process located in the District of Columbia will be named, and service on this agent constitutes service on the foreign refiner or any officer, or employee of the foreign refiner for any action by EPA

or otherwise by the United States related to the requirements of 40 CFR part 80, subparts D, E and F.

(3) The forum for any civil or criminal enforcement action related to the provisions of this section for violations of the Clean Air Act or regulations promulgated thereunder shall be governed by the Clean Air Act, including the EPA administrative forum where allowed under the Clean Air Act.

(4) United States substantive and procedural laws shall apply to any civil or criminal enforcement action against the foreign refiner or any employee of the foreign refiner related to the provisions of this section.

(5) Submitting a petition for an individual refinery baseline, producing and exporting gasoline under an individual refinery baseline, and all other actions to comply with the requirements of 40 CFR part 80, subparts D, E and F relating to the establishment and use of an individual refinery baseline constitute actions or activities covered by and within the meaning of 28 U.S.C. 1605(a)(2), but solely with respect to actions instituted against the foreign refiner, its agents, officers, and employees in any court or other tribunal in the United States for conduct that violates the requirements applicable to the foreign refiner under 40 CFR part 80, subparts D, E and F, including such conduct that violates Title 18 U.S.C. section 1001, Clean Air Act section 113(c)(2), or other applicable provisions of the Clean Air Act.

(6) The foreign refiner, or its agents, officers, or employees, will not seek to detain or to impose civil or criminal remedies against EPA inspectors or auditors, whether EPA employees or EPA contractors, for actions performed within the scope of EPA employment related to the provisions of this section.

(7) The commitment required by this paragraph (i) shall be signed by the owner or president of the foreign refiner business.

(8) In any case where FRGAS produced at a foreign refinery is stored or transported by another company between the refinery and the vessel that transports the FRGAS to the United States, the foreign refiner shall obtain from each such other company a commitment that meets the requirements specified in paragraphs (i) (1) through (7) of this section, and these commitments shall be included in the foreign refiner's baseline petition.

(j) *Sovereign immunity*. By submitting a petition for an individual foreign refinery baseline under this section, or by producing and exporting gasoline to the United States under an individual refinery baseline under this section, the foreign refiner, its agents, officers, and employees, without exception, become subject to the full operation of the administrative and judicial enforcement powers and provisions of the United States without limitation based on sovereign immunity, with respect to actions instituted against the foreign refiner, its agents, officers, and employees in any court or other tribunal in the United States for conduct that violates the requirements applicable to the foreign refiner under 40 CFR part 80, subparts D, E and F, including such conduct that violates Title 18 U.S.C. section 1001, Clean Air Act section 113(c)(2), or other applicable provisions of the Clean Air Act.

(k) *Bond posting*. Any foreign refiner shall meet the requirements of this paragraph (k) as a condition to being assigned an individual refinery baseline.

(1) The foreign refiner shall post a bond of the amount calculated using the following equation:

$$\text{Bond} = G \times \$0.01$$

where:

Bond = amount of the bond in U.S. dollars

G = the largest volume of conventional gasoline produced at the foreign refinery and exported to the United States, in gallons, during a single calendar year among the most recent of the following calendar years, up to a maximum of five calendar years: the calendar year immediately preceding the date the baseline petition is submitted, the calendar year the baseline petition is submitted, and each succeeding calendar year

(2) Bonds shall be posted by:

(i) Paying the amount of the bond to the Treasurer of the United States;

(ii) Obtaining a bond in the proper amount from a third party surety agent that is payable to satisfy United States judicial judgments against the foreign refiner, provided EPA agrees in

advance as to the third party and the nature of the surety agreement; or

(iii) An alternative commitment that results in assets of an appropriate liquidity and value being readily available to the United States, provided EPA agrees in advance as to the alternative commitment.

(3) If the bond amount for a foreign refinery increases the foreign refiner shall increase the bond to cover the shortfall within 90 days of the date the bond amount changes. If the bond amount decreases, the foreign refiner may reduce the amount of the bond beginning 90 days after the date the bond amount changes.

(4) Bonds posted under this paragraph (k) shall be used to satisfy any judicial judgment that results from an administrative or judicial enforcement action for conduct in violation of 40 CFR part 80, subparts D, E and F, including such conduct that violates Title 18 U.S.C. section 1001, Clean Air Act section 113(c)(2), or other applicable provisions of the Clean Air Act.

(5) On any occasion a foreign refiner bond is used to satisfy any judgment, the foreign refiner shall increase the bond to cover the amount used within 90 days of the date the bond is used.

(l) *Blendstock tracking*. For purposes of blendstock tracking by any foreign refiner under § 80.102 by a foreign refiner with an individual refinery baseline, the foreign refiner may exclude from the calculations required in § 80.102(d) the volume of applicable blendstocks for which the foreign refiner has sufficient evidence in the form of documentation that the blendstocks were used to produce gasoline used outside the United States.

(m) *English language reports*. Any report or other document submitted to EPA by any foreign refiner shall be in the English language, or shall include an English language translation.

(n) *Prohibitions*. (1) No person may combine certified FRGAS with any non-certified FRGAS or non-FRGAS, and no person may combine certified FRGAS with any certified FRGAS produced at a different refinery that is not aggregated under § 80.101(h), except as provided in paragraph (e) of this section.

(2) No foreign refiner or other person may cause another person to commit an action prohibited in paragraph (n)(1) of this section, or that otherwise violates the requirements of this section.

(o) *United States importer requirements*. Any United States importer shall meet the following requirements.

(1) Each batch of imported gasoline shall be classified by the importer as being FRGAS or as non-FRGAS, and each batch classified as FRGAS shall be further classified as certified FRGAS or as non-certified FRGAS.

(2) Gasoline shall be classified as certified FRGAS or as non-certified FRGAS according to the designation by the foreign refiner if this designation is supported by product transfer documents prepared by the foreign refiner as required in paragraph (d) of this section, unless the gasoline is classified as non-certified FRGAS under paragraph (g) of this section.

(3) For each gasoline batch classified as FRGAS, any United States importer shall perform the following procedures.

(i) In the case of both certified and non-certified FRGAS, have an independent third party:

(A) Determine the volume of gasoline in the vessel;

(B) Use the foreign refiner's FRGAS certification to determine the name and EPA-assigned registration number of the foreign refinery that produced the FRGAS;

(C) Determine the name and country of registration of the vessel used to transport the FRGAS to the United States; and

(D) Determine the date and time the vessel arrives at the United States port of entry.

(ii) In the case of certified FRGAS, have an independent third party:

(A) Collect a representative sample from each vessel compartment subsequent to the vessel's arrival at the United States port of entry and prior to off loading any gasoline from the vessel;

(B) Prepare a volume-weighted vessel composite sample from the compartment samples; and

(C) Determine the values for sulfur, benzene, gravity, E200 and E300 using the methodologies specified in § 80.46, by:

(*1*) The third party analyzing the sample; or

(*2*) The third party observing the importer analyze the sample

(4) Any importer shall submit reports within thirty days following the date any vessel transporting FRGAS arrives at the United States port of entry:

(i) To the Administrator containing the information determined under paragraph (o)(3) of this section; and

(ii) To the foreign refiner containing the information determined under paragraph (o)(3)(ii) of this section.

(5)(i) Any United States importer shall meet the requirements specified for conventional gasoline in § 80.101 for any imported conventional gasoline that is not classified as certified FRGAS under paragraph (o)(2) of this section.

(ii) The baseline applicable to a United States importer who has not been assigned an individual importer baseline under § 80.91(b)(4) shall be the baseline specified in paragraph (p) of this section.

(p) *Importer Baseline*. (1) Each calendar year starting in 2000, the Administrator shall calculate the volume weighted average NO_X emissions of imported conventional gasoline for a multi-year period (MYA_{NOx}). This calculation:

(i) Shall use the Phase II Complex Model;

(ii) Shall include all conventional gasoline in the following categories:

(A) Imported conventional gasoline that is classified as conventional gasoline, and included in the conventional gasoline compliance calculations of importers for each year; and

(B) Imported conventional gasoline that is classified as certified FRGAS, and included in the conventional gasoline compliance calculations of foreign refiners for each year;

(iii)(A) In 2000 only, shall be for the 1998 and 1999 averaging periods and also shall include all conventional gasoline classified as FRGAS and included in the conventional gasoline compliance calculations of a foreign refiner for 1997, and all conventional gasoline batches not classified as FRGAS that are imported during 1997 beginning on the date the first batch of FRGAS arrives at a United States port of entry; and

(B) Starting in 2001, shall include imported conventional gasoline during the prior three calendar year averaging periods.

(2)(i) If the volume-weighted average NO_X emissions (MYA_{NOx}), calculated in paragraph (p)(1) of this section, is greater than 1,465 mg/mile, the Administrator shall calculate an adjusted baseline for NO_X according to the following equation:

$$AB_{NOx} = 1{,}465 \text{ mg/mile} - (MYA_{NOx} - 1{,}465 \text{ mg/mile})$$

where:

AB_{NOx} = Adjusted NO_X baseline, in mg/mile
MYA_{NOx} = Multi-year average NO_X emissions, in mg/mile

(ii) For the 1998 and 1999 multi-year averaging period only the value of AB_{NOx} shall not be larger than 1,480 mg/mile regardless of the calculation under paragraph (p)(2)(i) of this section.

(3)(i) Notwithstanding the provisions of § 80.91(b)(4)(iii), the baseline NO_X emissions values applicable to any United States importer who has not been assigned an individual importer baseline under § 80.91(b)(4) shall be the more stringent of the statutory baseline value for NO_X under § 80.91(c)(5), or the adjusted NO_X baseline calculated in paragraph (p)(2) of this section.

(ii) On or before June 1 of each calendar year, the Administrator shall announce the NO_X baseline that applies to importers under this paragraph (p). If the baseline is an adjusted baseline, it shall be effective for any conventional gasoline imported beginning 60 days following the Administrator's announcement. If the baseline is the statutory baseline, it shall be effective upon announcement. A baseline shall remain in effect until the effective date of a subsequent change to the baseline pursuant to this paragraph (p).

(q) *Withdrawal or suspension of a foreign refinery's baseline*. EPA may withdraw or suspend a baseline that has been assigned to a foreign refinery where:

(1) A foreign refiner fails to meet any requirement of this section;

(2) A foreign government fails to allow EPA inspections as provided in paragraph (i)(1) of this section;

(3) A foreign refiner asserts a claim of, or a right to claim, sovereign immunity in an action to enforce the requirements in 40 CFR part 80, subparts D, E and F; or

(4) A foreign refiner fails to pay a civil or criminal penalty that is not satisfied using the foreign refiner bond specified in paragraph (k) of this section.

(r) *Early use of a foreign refinery baseline.* (1) A foreign refiner may begin using an individual refinery baseline before EPA has approved the baseline, provided that:

(i) A baseline petition has been submitted as required in paragraph (b) of this section;

(ii) EPA has made a provisional finding that the baseline petition is complete;

(iii) The foreign refiner has made the commitments required in paragraph (i) of this section;

(iv) The persons who will meet the independent third party and independent attest requirements for the foreign refinery have made the commitments required in paragraphs (f)(3)(iii) and (h)(7)(iii) of this section; and

(v) The foreign refiner has met the bond requirements of paragraph (k) of this section.

(2) In any case where a foreign refiner uses an individual refinery baseline before final approval under paragraph (r)(1) of this section, and the foreign refinery baseline values that ultimately are approved by EPA are more stringent than the early baseline values used by the foreign refiner, the foreign refiner shall recalculate its compliance, *ab initio*, using the baseline values approved by EPA, and the foreign refiner shall be liable for any resulting violation of the conventional gasoline requirements.

(s) *Additional requirements for petitions, reports and certificates.* Any petition for a refinery baseline under paragraph (b) of this section, any report or other submission required by paragraphs (c), (f)(2), or (i) of this section, and any certification under paragraph (d)(3) or (g)(1)(ii) of this section shall be:

(1) Submitted in accordance with procedures specified by the Administrator, including use of any forms that may specified by the Administrator.

(2) Be signed by the president or owner of the foreign refiner company, or in the case of (g)(1)(ii) the vessel owner, or by that person's immediate designee, and shall contain the following declaration:

I hereby certify: (1) that I have actual authority to sign on behalf of and to bind [insert name of foreign refiner or vessel owner] with regard to all statements contained herein; (2) that I am aware that the information contained herein is being certified, or submitted to the United States Environmental Protection Agency, under the requirements of 40 CFR part 80, subparts D, E and F and that the information is material for determining compliance under these regulations; and (3) that I have read and understand the information being certified or submitted, and this information is true, complete and correct to the best of my knowledge and belief after I have taken reasonable and appropriate steps to verify the accuracy thereof.

I affirm that I have read and understand that the provisions of 40 CFR part 80, subparts D, E and F, including 40 CFR 80.94 (i), (j) and (k), apply to [insert name of foreign refiner or vessel owner]. Pursuant to Clean Air Act section 113(c) and Title 18, United States Code, section 1001, the penalty for furnishing false, incomplete or misleading information in this certification or submission is a fine of up to $10,000, and/or imprisonment for up to five years.

[62 FR 45563, Aug. 28, 1997]

§§ 80.95–80.100 [Reserved]

§ 80.101 Standards applicable to refiners and importers.

Any refiner or importer of conventional gasoline shall meet the standards specified in this section over the specified averaging period, beginning on January 1, 1995.

(a) *Averaging period.* The averaging period for the standards specified in this section shall be January 1 through December 31, except as provided in paragraphs (k) and (l) of this section.

(b) *Conventional gasoline compliance standards*—(1) *Simple model standards.* The simple model standards are the following:

(i) Annual average exhaust benzene emissions, calculated according to paragraph (g)(1)(i) of this section, shall not exceed the refiner's or importer's compliance baseline for exhaust benzene emissions;

(ii) Annual average levels of sulfur shall not exceed 125% of the refiner's or importer's compliance baseline for sulfur;

(iii) Annual average levels of olefins shall not exceed 125% of the refiner's or importer's compliance baseline for olefins; and

(iv) Annual average values of T–90 shall not exceed 125% of the refiner's or importer's compliance baseline for T–90.

(2) *Optional complex model standards.* Annual average levels of exhaust benzene emissions, weighted by volume for each batch and calculated using the applicable complex model under § 80.45, shall not exceed the refiner's or importer's 1990 average exhaust benzene emissions.

(3) *Complex model standards.* (i) Annual average levels of exhaust toxics emissions and NO_X emissions, weighted by volume for each batch and calculated using the applicable complex model under § 80.45, shall not exceed the refiner's or importer's compliance baseline for exhaust toxics and NO_X emissions, respectively.

(ii) Annual average levels of RVP, benzene, aromatics, olefins, sulfur, E200 and E300 shall not be greater than the conventional gasoline complex model valid range limits for the parameter under § 80.45(f)(1)(ii), or the refiner or importer's annual 1990 baseline for the parameter if outside the valid range limit, whichever is greater.

(c) *Applicability of standards.* (1) For each averaging period prior to January 1, 1998, a refiner or importer shall be subject to either the Simple Model or Optional Complex Model Standards, at their option, except that any refiner or importer shall be subject to:

(i) The Simple Model Standards if the refiner or importer uses the Simple Model Standards for reformulated gasoline; or

(ii) The Optional Complex Model Standards if the refiner or importer used the Complex Model Standards for reformulated gasoline.

(2) Beginning January 1, 1998, each refiner and importer shall be subject to the Complex Model Standards for each averaging period.

(3)(i) The NO_X emissions standard specified in paragraph (b)(3)(i) of this section shall no longer apply beginning January 1, 2007, except as provided in paragraph (c)(3)(ii) of this section.

(ii) For a refiner subject to the small refiner gasoline sulfur standards at § 80.240, the NO_X emissions standard specified in paragraph (b)(3)(i) of this section shall no longer apply beginning January 1, 2008. For a refiner subject to the gasoline sulfur standards at § 80.240 that has received an extension of its small refiner gasoline sulfur standards under § 80.553, the NO_X emissions standard specified in paragraph (b)(3)(i) of this section shall no longer apply beginning January 1, 2011.

(4)(i) Beginning January 1, 2011, or January 1, 2015 for small refiners approved under § 80.1340, the exhaust toxics emissions standard specified in paragraph (b)(3)(i) of this section shall apply only to conventional gasoline that is not subject to the benzene standard of § 80.1230, pursuant to the provisions of § 80.1235.

(ii) The exhaust toxic emissions standard specified in paragraph (b)(3)(i) of this section shall not apply to conventional gasoline produced by a refinery approved under § 80.1334, pursuant to § 80.1334(c).

(d) *Product to which standards apply.* Any refiner for each refinery, or any importer, shall include in its compliance calculations:

(1) Any conventional gasoline produced or imported during the averaging period;

(2) [Reserved]

(3) Any gasoline blending stock produced or imported during the averaging period which becomes conventional gasoline solely upon the addition of oxygenate;

(4)(i) Any oxygenate that is added to conventional gasoline, or gasoline blending stock as described in paragraph (d)(3) of this section, where such gasoline or gasoline blending stock is produced or imported during the averaging period;

(ii) In the case of oxygenate that is added at a point downstream of the refinery or import facility, the oxygenate may be included only if the refiner or importer can establish the oxygenate was in fact added to the gasoline or gasoline blendstock produced, by showing that the oxygenate was added by:

(A) The refiner or importer; or

(B) By a person other than the refiner or importer, provided that the refiner or importer:

(*1*) Has a contract with the oxygenate blender that specifies procedures to be followed by the oxygenate blender that are reasonably calculated to ensure blending with the amount and type of oxygenate claimed by the refiner or importer; and

(*2*) Monitors the oxygenate blending operation to ensure the volume and type of oxygenate claimed by the refiner or importer is correct, through periodic audits of the oxygenate blender designed to assess whether the overall volumes and type of oxygenate purchased and used by the oxygenate blender are consistent with the oxygenate claimed by the refiner or importer and that this oxygenate was blended with the refiner's or importer's gasoline or blending stock, periodic sampling and testing of the gasoline produced subsequent to oxygenate blending, and periodic inspections to ensure the contractual requirements imposed by the refiner or importer on the oxygenate blender are being met.

(e) *Product to which standards do not apply*. Any refiner for each refinery, or any importer, shall exclude from its compliance calculations:

(1) Gasoline that was not produced at the refinery or was not imported by the importer;

(2) [Reserved]

(3) California gasoline as defined in § 80.81(a)(2); and

(4) Gasoline that is exported.

(f) *Compliance baseline determinations*. (1) In the case of any refiner or importer for whom an individual baseline has been established under § 80.91, the individual baseline for each parameter or emissions performance shall be the compliance baseline for that refiner or importer.

(2)(i) In the case of any refiner for any refinery or importer for whom the anti-dumping statutory baseline applies under § 80.91, the anti-dumping statutory baseline for each parameter or emissions performance shall be the compliance baseline for that refinery or importer.

(ii) In the case of any refiner for any refinery or importer that has received approval of a petition submitted under § 80.93(d)(1)(iii), the compliance baseline for each emissions performance for that refinery or importer for gasoline produced or imported for use in Alaska shall be the winter statutory baseline value under § 80.45(b)(3), Table 5.

(iii) In the case of any refiner for any refinery or importer that has received approval of a petition submitted under § 80.93(d)(2)(iii), the compliance baseline for each emissions performance for that refinery or importer for gasoline produced or imported for use in Hawaii, the Commonwealth of Puerto Rico, and/or the Virgin Islands shall be:

(A) The summer statutory baseline value under § 80.45(b)(3), Table 5 for NO_X.

(B) The summer statutory baseline value under § 80.45(b)(3), Table 5 for Toxics less the corresponding value for Benzene under § 80.45(b)(3), Table 4.

(3)(i) In the case of any refiner for any refinery or importer that has received approval of a petition submitted under § 80.93(d)(1)(ii), the compliance baseline for each emissions performance for that refinery or importer for gasoline produced or imported for use in Alaska shall be the refinery's or importer's winter baseline value determined under § 80.91.

(ii) In the case of any refiner for any refinery or importer that has received approval of a petition submitted under § 80.93(d)(2)(ii), the compliance baseline for each emissions performance for that refinery or importer for gasoline produced or imported for use in Hawaii, the Commonwealth of Puerto Rico, and/or the Virgin Islands shall be the refinery's or importer's summer baseline value determined under § 80.91.

(4) Any compliance baseline under paragraph (f)(1) of this section shall be adjusted for each averaging period as follows:

(i) If the total volume of the conventional gasoline, RBOB, reformulated

gasoline, and California gasoline as defined in § 80.81(a)(2), produced or imported by any refiner or importer during the averaging period is equal to or less than that refiner's or importer's 1990 baseline volume as determined under § 80.91(f)(1), the compliance baseline for each parameter or emissions performance shall be that refiner's or importer's individual 1990 baseline; or

(ii) If the total volume of the conventional gasoline, RBOB, reformulated gasoline, and California gasoline as defined in § 80.81(a)(2), produced or imported by any refiner or importer during the averaging period is greater than that refiner's or importer's 1990 baseline volume as determined under § 80.91(f)(1), the compliance baseline for each parameter or emissions performance shall be calculated according to the following formula:

$$CB_i = \left(B_i * \left(\frac{V_{1990}}{V_a}\right)\right) + \left(DB_i * \left(1 - \frac{V_{1990}}{V_a}\right)\right)$$

Where:

CB_i = The compliance baseline value for parameter or emissions performance i.

B_i = The refiner's or importer's individual baseline value for parameter or emission performance i calculated according to the methodology in § 80.91.

DB_i = The anti-dumping statutory baseline value for parameter or emissions performance i, as specified at § 80.91(c)(5)(iii) or (c)(5)(iv), respectively.

V_{1990} = The 1990 baseline volume as determined under § 80.91(f)(1).

V_a = The total volume of reformulated gasoline, conventional gasoline, RBOB, and California gasoline as defined in § 80.81(a)(2) produced or imported by a refiner or importer during the averaging period.

(iii) Any refiner or importer with an individual baseline that has received approval of a petition submitted under § 80.93(d) and has produced or imported gasoline for use in Alaska, Hawaii, the Commonwealth of Puerto Rico, or the Virgin Islands must calculate the compliance baseline for each parameter or emissions performance as follows:

$$CB_i \frac{CB_{i,1} \times V_1 + CB_{i,2} \times V_2 + CB_{i,3} \times (V_3 - V_r)}{(V_1 + V_2 + V_3 - V_r)}$$

If $V_j \geq V_{1990j} > 0$:

$$CB_{i,j} = B_{i,j} \times \left(\frac{V_{1990j}}{V_j}\right) + DB_{i,j} \times \left(1 - \frac{V_{1990j}}{V_j}\right)$$

If $V_j < V_{1990j}$ or $V_{1990j} = 0$: $CB_{i,j} = B_{i,j}$

Where:

CB_i = The compliance baseline for parameter or emissions performance i

$CB_{i,j}$ = The compliance baseline for parameter or emissions performance i applicable to the conventional gasoline in production volume V_j

j is a subscript identifying a portion of gasoline and RBOB produced or imported as follows:

j=1: Conventional gasoline supplied to Hawaii, the Commonwealth of Puerto Rico and the Virgin Islands, if gasoline supplied to these areas is covered by a petition for a separate baseline.

j=2: Conventional gasoline supplied to Alaska, if gasoline supplied to this area is covered by a petition for a separate baseline.

j=3: Conventional gasoline, reformulated gasoline, RBOB and California gasoline produced or imported by a refiner or importer, and not included in portions 1 or 2.

V_j = The averaging period volume for portion j.

V_r = The volume of reformulated gasoline, RBOB and California gasoline included in V_3.

$B_{i,j}$ = The refiner/importer's individual baseline for parameter or emissions performance i applicable to the conventional gasoline in portion j, or the applicable statutory baseline if assigned in lieu of an individual baseline.

$DB_{i,j}$ = The statutory baseline for parameter or emissions performance i applicable to the conventional gasoline in portion j (i.e., the annual or seasonal statutory baseline).

V_{1990j} = The 1990 baseline volume applicable to portion j.

(g) *Compliance calculations*—(1)(i) *Simple model calculations*. In the case of any refiner or importer subject to an individual refinery baseline, the annual average value for each parameter or emissions performance during the averaging period, calculated according to the following methodologies, shall be less than or equal to the refiner's or importer's standard under paragraph (b) of this section for that parameter.

(A) The average value for sulfur, T–90, olefin, benzene, and aromatics for an averaging period shall be calculated as follows:

$$APARM = \left(\frac{\sum_{i=1}^{n} \left(V_i \times PARM_i \times SG_i \right)}{\sum_{i=1}^{n} V_i \times SG_i} \right)$$

where

APARM = the average value for the parameter being evaluated

V_i = the volume of conventional gasoline or other products included under paragraph (d) of this section, in batch i

$PARM_i$ = the value of the parameter being evaluated for batch i as determined in accordance with the test methods specified in § 80.46

n = the number of batches of conventional gasoline and other products included under paragraph (d) of this section produced or imported during the averaging period

SG_i = specific gravity of batch i (only applicable for sulfur)

(B) Exhaust benzene emissions under the Simple Model for an averaging period are calculated as follows:

$$EXHBEN = 1.884 + (0.949 \times BZ) + (0.113 \times (AR - BZ))$$

where

EXHBEN = the average exhaust benzene emissions for the averaging period

BZ = the average benzene content for the averaging period, calculated per paragraph (g)(1)(i)(A) of this section

AR = the average aromatics content for the averaging period, calculated per paragraph (g)(1)(i)(A) of this section

(ii) Complex Model calculations.

(A) Exhaust benzene, exhaust toxics, and exhaust NO_X emissions performance for each batch shall be calculated in accordance with the applicable model under § 80.45.

(B) Any refiner for any refinery or importer that has received EPA approval of a petition submitted in accordance with the provisions of § 80.93(d)(1) must use the applicable winter complex model under § 80.45, using an RVP of 8.7 psi, to evaluate its averaging period gasoline produced or imported for use in Alaska.

(C) Any refiner for any refinery or importer that has received EPA approval of a petition submitted in accordance with the provisions of § 80.93(d)(2) must use the applicable summer complex model under § 80.45 to evaluate its averaging period gasoline produced or imported for use in Hawaii, the Commonwealth of Puerto Rico, and the Virgin Islands.

(2) In the case of any refiner or importer subject to the anti-dumping statutory baseline, the summer statutory baseline and/or the winter statutory baseline, the refiner or importer shall determine compliance using the following methodology:

(i) Calculate the compliance total for the averaging period for sulfur, T–90, olefins, exhaust benzene emissions, exhaust toxics and exhaust NO_X emissions, as applicable, based upon the anti-dumping statutory baseline value, the summer statutory baseline value, or the winter statutory baseline value, as applicable, for that parameter using the formula specified at 80.67.

(ii) Calculate the actual total for the averaging period for sulfur, T–90, olefins, exhaust benzene emissions, exhaust toxics and exhaust NO_X emissions, as applicable, based upon the value of the parameter for each batch of conventional gasoline and gasoline blendstocks, if applicable, using the formula specified at § 80.67.

(iii) The actual total for exhaust benzene emissions, exhaust toxics and exhaust NO_X emissions, shall not exceed the compliance total, and the actual totals for sulfur, olefins and T–90 shall not exceed 125% of the compliance totals, as required under the applicable model.

(3) Exhaust toxics and NO_X emissions performance of a blendstock batch shall be determined as follows:

(i) Determine the volume and properties of the blendstock.

(ii) Determine the blendstock volume fraction (F) based on the volume of blendstock, and the volume of gasoline with which the blendstock is blended, using the following equation:

$$F = \frac{V_b}{V_b + V_g}$$

where:

F = blendstock volume fraction

V_b = volume of blendstock

V_g = volume of gasoline with which the blendstock is blended

(iii) For each parameter required by the complex model, calculate the parameter value that would result by combining, at the blendstock volume fraction (F), the blendstock with a gasoline having properties equal to the refinery's or importer's baseline, using the following formula:

$$CP_j = \frac{\left(BAP_j \times V_g\right) + \left(BLP_j \times V_b\right)}{V_g + V_b}$$

where:

CP_j = calculated value for parameter j

BAP_j = baseline value for parameter j

BLP_j = value of parameter j for the blendstock or oxygenate

j = each parameter required by the complex model

(A) The baseline value shall be the refinery's ''summer'' or ''winter'' baseline, based on the ''summer'' or ''winter'' classification of the gasoline produced as determined under paragraphs (g)(5) or (g)(6) of this section. In the case of a refinery that is aggregated under paragraph (h) of this section, the refinery baseline shall be used, and not the aggregate baseline.

(B) The sulfur content and oxygen wt% computations under paragraph (g)(3)(iii) of this section shall be adjusted for the specific gravity of the gasoline and blendstock using specific gravities of 0.749 for ''summer'' gasoline and of 0.738 for ''winter'' gasoline.

(C) In the case of ''summer'' gasoline, where the blendstock is ethanol and the volume fraction calculated under paragraph (g)(3)(ii) is equal to or greater than 0.015, the value for RVP calculated under paragraph (g)(3)(iii) of this section shall be 1.0 psi greater than the RVP of the gasoline with which the blendstock is blended.

(iv) Using the summer or winter complex model, as appropriate, calculate the exhaust toxics and NO_X emissions performance, in mg/mi, of:

(A) A hypothetical gasoline having properties equal to those calculated in paragraph (g)(3)(iii) of this section (HEP); and

(B) A gasoline having properties equal to the refinery's or importer's baseline (BEP).

(v) Calculate the exhaust toxics and NO_X equivalent emissions performance (EEP) of the blendstock, in mg/mi, using the following equation:

$$EEP_j = \frac{HEP_j - \left(BEP_j * (1 - F)\right)}{F}$$

where:

EEP_j = equivalent emissions performance of the blendstock for emissions performance j

BEP_j = emissions performance j of a gasoline having the properties of the refinery's baseline

HEP_j = emissions performance j of a hypothetical blendstock/gasoline blend

F = blendstock volume fraction
j = exhaust toxics or NO_X emissions performance

(vi) For each blendstock batch, the volume, and exhaust toxics and NO_X equivalent emissions performance (EEP) shall be included in the refinery's compliance calculations.

(4) Compliance calculations under this subpart E shall be based on computations to the same degree of accuracy that are specified in establishing individual baselines under § 80.91.

(5) The emissions performance of gasoline that has an RVP that is equal to or less than the RVP required under § 80.27 (''summer gasoline'') shall be determined using the applicable summer complex model under § 80.45.

(6)(i) The emissions performance of gasoline that has an RVP greater than the RVP required under § 80.27 (''winter gasoline'') shall be determined using the applicable winter complex model under § 80.45, using an RVP of 8.7 psi for compliance calculation purposes under this subpart E.

(ii) Except as provided in paragraph (g)(1)(ii) of this section, the emissions performance of gasoline produced or imported for use in areas that are not subject to the requirements of § 80.27 shall be determined using the applicable winter complex model under § 80.45, using an RVP of 8.7 psi for compliance calculation purposes under this subpart E.

(7)(i) For the 1998 averaging period any refiner or importer may elect to determine compliance with the requirement for exhaust NO_X emissions performance either with or without the inclusion of oxygenates in its compliance calculations, in accordance with § 80.91(e)(4), provided that the baseline exhaust NO_X emissions performance is calculated using the same with- or without-oxygen approach.

(ii)(A) Any refiner or importer must use the with- or without-oxygen approach elected under paragraph (g)(7)(i) of this section for all subsequent averaging periods; except that

(B) In the case of any refiner or importer who elects to determines compliance for the calendar year 1998 averaging period without the inclusion of oxygenates, such refiner or importer may elect to include oxygenates in its compliance calculations for the 1999 averaging period.

(iii) Any refiner or importer who elects to use the with-oxygen approach under paragraph (g)(7)(ii)(B) of this section must use this approach for all subsequent averaging periods.

(8) *Emissions performance of conventional gasoline with parameters outside the complex model valid range limits.* Notwithstanding the provisions of § 80.45(f)(2), in the case of any parameter value that does not fall within the complex model range limit in § 80.45(f)(1)(ii), the refiner or importer shall determine the emissions performance of the batch using the following parameter values:

Parameter outside the range limit	Parameter value to use for calculating	
	Exhaust toxics	NO_X
Sulfur	Test value [1]	Test value. [1]
RVP (summer only):		
< 6.4 psi	6.4 psi	6.4 psi.
> 11.0 psi	Test value [1]	Test value. [1]
Aromatics	Test value [1]	Test value. [1]
Olefins	Test value [1]	Test value. [1]
Benzene	Test value [1]	Test value. [1]
E200:		
< 30%	Test value [1]	30%
> 70%	70%	Test value. [1]
E300 < 70%	Test value [1]	Test value. [1]

[1] Test value is the value for a parameter determined pursuant to paragraph 80.101(i)(1)(i) of this section.

(9) *Exclusion of previously certified gasoline.* (i) Any refiner who uses previously certified reformulated or conventional gasoline or RBOB to produce conventional gasoline at a refinery, must exclude the previously certified gasoline for purposes of demonstrating compliance with the standards under paragraph (b) of this section.

(ii) To accomplish the exclusion required in paragraph (g)(9)(i) of this section, the refiner must determine the volume and properties of the previously certified gasoline used at the refinery, and the volume and properties of gasoline produced at the refinery, and use the compliance calculation procedures in paragraphs (g)(9)(iii) and (g)(9)(iv) of this section.

(iii) For each batch of previously certified gasoline that is used to produce conventional gasoline the refiner must:

(A) Determine the volume and properties using the procedures in paragraph (i) of this section;

(B) Determine the exhaust toxics and NO_X emissions performance using the summer or winter complex model as appropriate;

(C) Include the volume and emissions performance of the previously certified gasoline as a negative volume and a negative emissions performance in the refiner's compliance calculations for the refinery, or where applicable, the refiner's aggregation under paragraph (h) of this section, for exhaust toxics and NO_X.

(iv) For each batch of conventional gasoline produced at the refinery using previously certified gasoline, the refiner must determine the volume and properties, and exhaust toxics and NO_X emissions performance, and include each batch in the refinery's compliance calculations for exhaust toxics and NO_X without regard to the presence of previously certified gasoline in the batch.

(v) The refiner must use any previously certified gasoline that the refiner includes as a negative batch in its compliance calculations for the refinery, or where appropriate, the refiner's aggregation, as a component in gasoline production during the annual averaging period in which the previously certified gasoline was included as a negative batch in the refiner's compliance calculations.

(vi) Notwithstanding the provisions of this paragraph (g)(9), the provisions of paragraph (g)(3) of this section may be used to calculate the exhaust toxics and NO_X emissions performance of a blendstock added to conventional gasoline for purposes of demonstrating compliance with the standards under paragraph (b) of this section.

(h) *Refinery grouping for determining compliance.* (1) Any refiner that operates more than one refinery may:

(i) Elect to achieve compliance individually for the refineries; or

(ii) Elect to achieve compliance on an aggregate basis for a group, or for groups, of refineries, some of which may be individual refineries; provided that

(iii) Compliance is achieved for each refinery separately or as part of a group; and

(iv) The data for any refinery is included only in one compliance calculation.

(2) Any election by a refiner to group refineries under paragraph (h)(1) of this section shall:

(i) Be made as part of the report for the 1995 averaging period required by § 80.105; and

(ii) Apply for the 1995 averaging period and for each subsequent averaging period, and may not thereafter be changed.

(3)(i) Any standards under this section shall apply, and compliance calculations shall be made, separately for each refinery or refinery group; except that

(ii) Any refiner that produces conventional gasoline for distribution to a specified geographic area which is the subject of a petition approved by EPA pursuant to § 80.91(f)(3) shall achieve compliance separately for gasoline supplied to such specified geographic area.

(i) *Sampling and testing.* (1) Any refiner or importer shall for each batch of conventional gasoline, and other products if included in paragraph (d) of this section:

(i)(A) Determine the value of each of the properties required for determining compliance with the standards that are applicable to the refiner or importer, by collecting and analyzing a representative sample of gasoline or blendstock taken from the batch, using the methodologies specified in § 80.46; except that

(B) Any refiner that produces gasoline by combining blendstock with gasoline that has been included in the compliance calculations of another refiner or of an importer may for such gasoline meet this sampling and testing requirement by collecting and analyzing a representative sample of the blendstock used subsequent to each receipt of such blendstock if the compliance calculation method specified in paragraph (g)(3) of this section is used.

(ii) Assign a number to the batch (the ''batch number''), as specified in § 80.65(d)(3);

(2) For the purposes of meeting the sampling and testing requirements under paragraph (i)(1) of this section, any refiner or importer may, prior to analysis, combine samples of gasoline

collected from more than one batch of gasoline or blendstock (''composite sample''), and treat such composite sample as one batch of gasoline or blendstock provided that the refiner or importer:

(i) Meets each of the requirements specified in § 80.91(d)(4)(iii) for the samples contained in the composite sample;

(ii) Combines samples of gasoline that are produced or imported over a period no longer than one month;

(iii) Uses the total of the volumes of the batches of gasoline that comprise the composite sample, and the results of the analyses of the composite sample, for purposes of compliance calculations under paragraph (g) of this section; and

(iv) Does not combine summer and winter gasoline, as specified under paragraphs (g) (5) and (6) of this section, in a composite sample.

(3) An importer who imports conventional gasoline into the United States by truck may meet the sampling and testing requirements under paragraph (i)(1) of this section as follows:

(i)(A) The importer must demonstrate that the imported gasoline meets the applicable conventional gasoline standards, through test results of samples of the gasoline contained in the storage tank from which the trucks used to transport gasoline into the United States are loaded.

(B) The frequency of this sampling and testing must be subsequent to each receipt of gasoline into the storage tank, or immediately prior to each transfer of gasoline to the importer's truck.

(C) The testing must be for each applicable parameter specified under § 80.65(e)(2)(i), using the test methods specified under § 80.46.

(D) The importer must obtain a copy of the terminal test results that reflects the quality of each truck load of gasoline that is imported into the United States.

(ii)(A) The importer must conduct separate programs of periodic quality assurance sampling and testing of the gasoline obtained from each truck-loading terminal, to ensure the accuracy of the terminal test results.

(B) The quality assurance samples must be obtained from the truck-loading terminal by the importer, and terminal operator may not know in advance when samples are to be collected.

(C) The importer must test each sample (or use a laboratory that is independent under § 80.82(b)(2) to test the sample) for the parameters specified under § 80.65(e)(2)(i) using the test methods specified under § 80.46, and the results must correlate with the terminal's test results within the ranges specified under § 80.65(e)(2)(i).

(D) The frequency of quality assurance sampling and testing must be at least one sample for each fifty of an importer's trucks that are loaded at a terminal, or one sample per month, whichever is more frequent.

(iii) The requirements of paragraph (i)(3)(ii) of this section are satisfied if the sampling and testing required under paragraph (i)(3)(i) is conducted by a laboratory that is an independent laboratory under the criteria of § 80.82(b)(2).

(iv) The importer must treat each truck load of imported gasoline as a separate batch for purposes of assigning batch numbers under § 80.101(i), recordkeeping under § 80.104, and reporting under § 80.105.

(v) EPA inspectors or auditors, and auditors conducting attest engagements under subpart F, must be given full and immediate access to the truck-loading terminal and any laboratory at which samples of gasoline collected at the terminal are analyzed, and be allowed to conduct inspections, review records, collect gasoline samples, and perform audits. These inspections or audits may be either announced or unannounced.

(vi) In the event the requirements specified in paragraphs (i)(3)(i) through (v) of this section are not met, in whole or in part, the importer shall immediately lose the option of importing gasoline under the terms of this paragraph (i)(3).

(j) *Evasion of standards through exporting and importing gasoline.* Notwithstanding the requirements of this section, no refiner or importer shall export gasoline and import the same or

other gasoline for the purpose of evading a more stringent baseline requirement.

(k) *Petitions for an alternative anti-dumping averaging period*—(1) *Eligibility for petition*. (i) The Administrator may grant an averaging period of two, three, four or five years upon petition of a refiner who:

(A) Activates or plans to activate conventional gasoline production at a refinery that has never produced gasoline subject to the anti-dumping requirements of subpart E of this part; and

(B) Faces substantial, demonstrated hardship in meeting the anti-dumping statutory baseline NO_X standard during the early years of production.

(ii) The Administrator will consider the refiner's or refinery's compliance with all applicable Federal, state, and local environmental statutes or requirements in evaluating the petition, including, but not limited to, any applicable stationary source requirement or standards.

(2) *Contents of a petition*. A petition for a four or five year averaging period must be submitted by June 1, 2001. A petition for a two or three year averaging period must be submitted by June 1, 2003. Regardless of the averaging period requested, the petition must include:

(i) The business name and address of the affected refinery and any location(s) where the refiner conducts operations.

(ii) The name, address, phone number, fax number, and e-mail address of the responsible corporate officer and contact person who can provide clarification and explanation with regard to any information in the petition.

(iii) A detailed explanation of why the refinery is eligible for an alternative anti-dumping compliance period under paragraph (k)(1) of this section, including:

(A) Documentation the refinery has never produced gasoline that was subject to the anti-dumping standards under subpart E of this part and

(B) Documentation demonstrating the hardship the refinery will experience meeting the anti-dumping statutory baseline NO_X standard.

(iv) The length of the averaging period requested and a justification for why that length of averaging period is required.

(v) An estimate as to when the refinery can produce gasoline that will meet the statutory baseline standard for NO_X.

(vi) The refinery's estimated gasoline production and annual average NO_X level for each of the years for which the alternative averaging period is requested.

(vii) A detailed description of the current refinery equipment and configuration.

(viii) A detailed description of changes to the refinery equipment the refiner intends to complete in order to begin producing gasoline that will allow the refinery to comply with the overall alternative averaging period NO_X standard, and for such changes the intended dates for events the refiner believes are appropriate for demonstrating reasonable progress towards completion of the changes, including the following events:

(A) Sign the design contract;

(B) Obtain necessary permits;

(C) Obtain construction financing commitments;

(D) Begin construction.

(E) Complete construction

(ix) The current nominal crude capacity of the refinery as reported to the Energy Information Administration (EIA) of the Department of Energy (DOE).

(x) A detailed explanation of the refiner's plans to finance capital improvements at the refinery in order to meet all current applicable EPA gasoline and diesel fuel quality standards.

(xi) A demonstration that the refiner has the funds and identified sources from which to purchase stationary source NO_X credits sufficient to offset the maximum projected NO_X deficit as calculated in accordance with paragraph (k)(4)(ii) of this section on a quarterly basis.

(xii) A full disclosure and explanation of any matters of non-compliance or violations of any environmental statutes or requirements for which the refiner has received notification by any state, local, or Federal agency.

(xiii) A signed agreement by any parent company or, in the case of a joint venture, individual partners, if applicable, acknowledging that they will be liable for any violations.

(xiv) Any other information the Administrator may require in order to fully evaluate the refiner's petition.

(xv) The signature of a responsible corporate officer, certifying that the information contained in the petition is true.

(3) *NO_X standards and other requirements applicable to refineries operating under an alternative anti-dumping averaging period.* If a petition by a refiner is approved, the standards described in this paragraph shall be the standards applicable to the refinery identified in the petition for purposes of the anti-dumping program during the period of the alternative averaging period. Except as specifically modified by this section, the refinery must continue to comply with all other standards applicable under the anti-dumping standards of subpart E of this part.

(i) A refinery shall meet the following deadlines for compliance with the statutory baseline, depending on the length of the alternative averaging period applicable to the refinery:

Length of compliance period in years	Compliance period must start no later than January 1st of	Refinery must comply with the Statutory Baseline NO_X standard, on average, for gasoline produced beginning with the
2	2004	7th quarter and all subsequent quarters.
3	2003	10th quarter and all subsequent quarters.
4	2002	13th quarter and all subsequent quarters.
5	2001	16th quarter and all subsequent quarters.

(ii)(A) By the end of the applicable alternative averaging period, the refinery must generate a net NO_X benefit (compared to the statutory baseline) that is at least twice as large as the total NO_X deficit generated during the period of time during which the refiner produced gasoline that did not comply with the statutory baseline.

(B) At least one-half of the total NO_X benefit required under paragraph (k)(3)(ii)(A) of this section must be generated by production of conventional gasoline at the refinery that is cleaner than the statutory baseline NO_X standard, as calculated on a quarterly basis in accordance with the provision of this paragraph (k)(3)(ii).

(C) Any portion of the total NO_X benefit beyond that portion described under paragraph (k)(3)(ii)(B) of this section may come from either the production of conventional gasoline at the refinery that is cleaner than the statutory baseline NO_X standard, as calculated on a quarterly basis, or from the purchase and retirement of stationary source NO_X credits or allowances, as provided in paragraph (k)(3)(iii) of this section.

(D) For the purposes of this § 80.101(k) and § 80.101(l), the NO_X deficit in tons shall be calculated in accordance with the following equation:

$$NO_{XDef} = (NO_{Xad} - NO_{Xsea})* G_d*2.7\times10^{-8}$$

Where:

NO_{XDef} = the NO_X deficit, in tons, for a calendar quarter in which the refiner's NO_X performance for that quarter exceeds NO_{Xsea}.

NO_{Xad} = the average volume weighted NO_X emissions performance, in mg/mile, for a calendar quarter in which the refiner exceeds NO_{Xsea}.

NO_{Xsea} = quarterly statutory NO_X performance values. First calendar quarter = 1540 mg/mile; Second calendar quarter = 1383 mg/mile; Third calendar quarter = 1381 mg/mile; Fourth calendar quarter = 1540 mg/mile.

G_d = the volume of gasoline produced during a quarter in which the refiner exceeds the applicable NO_X standard, measured in gallons.

(E) For the purposes of this § 80.101(k) and § 80.101(l), the NO_X benefit in tons shall be calculated in accordance with the following equation:

$$NO_{XBen}\ (NO_{Xsea}—NO_{Xab})*G_d*2.7\times10^{-8}$$

Where:

NO_{xBen} = the NO_X benefit, in tons, for a calendar quarter in which the refiner's NO_X performance for that quarter is below NO_{Xsea}.

NO_{Xab} = the average volume weighted NO_X emissions performance, in mg/mile, for a calendar quarter in which the refiner is below NO_{Xsea}.

NO_{Xsea} = quarterly statutory NO_X performance values. First calendar quarter = 1540 mg/mile; Second calendar quarter = 1383 mg/mile; Third calendar quarter = 1381 mg/mile; Fourth calendar quarter = 1540 mg/mile.

G_b = the volume of gasoline produced during a quarter in which the refiner is below the applicable NO_X standard, measured in gallons.

(iii) NO_X Credits and Allowances. (A) Within 60 days of the end of each quarter for which the refinery produces gasoline for which there is a NO_X deficit, the refiner shall purchase stationary source NO_X credits or allowances that are equal to or greater than the amount of the NO_X deficit generated during the quarter, and provide written demonstration of such transaction to the Administrator. These NO_X credits or allowances are in addition to any NO_X credits or allowances purchased during any previous quarters. NO_X deficit is to be calculated on a quarterly basis in accordance with the equation in paragraph (k)(3)(ii)(D) of this section.

(B) No NO_X credits or allowances purchased by the refiner may contribute to the refinery's compliance with the requirements of paragraphs (k)(3)(ii)(B) of this section.

(C) The refinery may sell NO_X credits or allowances purchased under this paragraph (k)(3)(iii) only in an amount equal to or less than any NO_X benefit that the refinery generates subsequently through the production of conventional gasoline at the refinery that is cleaner than the statutory baseline NO_X standard, as calculated on a quarterly basis. A refiner may retire credits or allowances purchased under this paragraph (k)(3)(iii) at any time.

(D) For purposes of satisfying a refinery's obligations under paragraphs (k)(3)(ii)(C), (k)(3)(iii)(A) or (l)(6)(ii) of this section, any NO_X credits or allowances that a refiner purchases must have been validly generated as part of a state stationary source program covered by an approved state implementation plan (SIP) and must be current and marketable NO_X credits or allowances. It shall be the refiner's responsibility to ensure that NO_X credits or allowances are valid, current and marketable.

(E) In order to be retired, NO_X allowances or credits must be retired by EPA or the administering state agency, as provided for in the applicable state implementation plan (SIP). It shall be the refiner's responsibility to ensure that NO_X credits or allowances are actually retired and that retirement is reflected in the records of EPA or the administering state agency.

(iv) (A) The refinery shall not generate marketable credits or allotments under the Tier 2 gasoline program provisions of Subpart H of this part during the entire alternative averaging period and shall provide a written statement, on a quarterly basis, certifying that the refinery has not generated, produced, sold, or transferred any such marketable credits or allotments under Subpart H of this part.

(B) If the final quarter of the alternative averaging period ends on a date other than December 31, then the refiner may generate credits for that portion of the year that was not subject to the alternative averaging period.

(v) The refinery shall market any conventional gasoline it produces that is subject to the requirements of § 80.27 as 9.0 RVP gasoline until the standard in paragraph (k)(3)(i) of this section is met.

(vi) A refinery that has been granted an averaging period under this section must submit the following reports to the Administrator within 30 days of the end of each calendar quarter:

(A) Quarterly batch reports and antidumping averaging reports for gasoline produced during each quarter; and

(B)(*1*) Documents that demonstrate compliance with the requirements under paragraph (k)(3)(iii) and (k)(3)(iv) of this section. including a calculation of the NO_X deficit or benefit for that quarter and a current total, based upon all quarters, indicating the current NO_X deficit or NO_X benefit balance for the refinery; and

(2) A statement of the number of NO_X credits or allowances purchased, sold or retired during the quarter and a current total, based upon all quarters, indicating the current balance of NO_X credits or allowances; and

(3) Any contractual documents, or other documents, evidencing the purchasing, banking or retiring of NO_X credits or allowances.

(vii) The Administrator may specify, as part of the approved petition, deadlines by which a refiner is obligated to take certain actions (including those listed in paragraph (k)(2)(viii) of this

section) demonstrating reasonable progress toward completion of the refinery changes necessary to produce gasoline that will allow the refinery to comply with the overall alternative averaging period NO_X standard.

(viii)(A) The refiner shall submit reports demonstrating compliance with deadline requirements under paragraph (k)(3)(vii) of this section no later than 30 days after the applicable deadline occurs. Upon failure to meet a deadline requirement under paragraph (k)(3)(vii) of this section, the Administrator may accelerate the date by which the refiner would have to produce gasoline that complies with the annual average statutory baseline NO_X standard under paragraph (k)(3)(i) or (l)(6)(i) of this section such that the gasoline produced by the refinery beginning with the quarter immediately following the quarter during which the failure occurred (and during each subsequent quarter) would have to meet that standard. The acceleration of the requirement under paragraph (k)(3)(i) or (l)(6)(i) of this section, regarding compliance with the annual average statutory baseline NO_X standard, does not affect the applicability of any other standard or requirement applicable to the refinery under this or any other section of the Act (*e.g.*, the refinery must still comply with the overall alternative averaging period NO_X requirements in paragraph (k)(3)(ii) of this section).

(B) The reports required by this paragraph shall be on forms and following procedures specified by the Administrator of the EPA and signed and certified as correct by the owner or a responsible corporate officer of the refiner.

(ix) The refiner shall comply with any condition or requirement prescribed by the Administrator as part of the petition approval.

(x) The refinery must comply with all standards in this paragraph and with all applicable anti-dumping standards in Subpart E of this section, except the NO_X standard.

(4) *Approval or disapproval of petitions.* The Administrator will approve or disapprove the petition within six months of receipt, in writing, and in the case of an approval will include any conditions or requirements to which the approval is subject.

(5) *Effective date for alternative averaging period.* (i) For an approved petition, the alternative averaging period shall become effective with the first day of the next calendar quarter, unless the first day of a later calendar quarter is requested.

(ii) If the final quarter of the alternative averaging period ends on a date other than December 31, then the refiner must demonstrate compliance with anti-dumping standards for gasoline produced during the remainder of that year and must demonstrate such compliance via the annual report as specified in § 80.105.

(6) *Refinery request for a change in alternative averaging period.* At any point during the pendency of an alternative conventional gasoline anti-dumping compliance period the Administrator may, upon application by a refiner, approve a different alternative compliance period for a refinery already operating subject to an alternative compliance period. In any such case:

(i) A refinery for which a change in the applicable alternative compliance period is approved shall thereafter operate as if the refinery had originally requested and received such alternative compliance period, and shall be subject to the standards and other requirements applicable under such alternative compliance period.

(ii) The Administrator will approve or disapprove any application for a different alternative compliance period, in writing, within six months of receipt, and in the case of an approval will include any conditions or other requirements to which the approval is subject;

(iii) Accept as specifically modified by this section, such refinery must continue to comply with all other standards and other requirements applicable under the conventional gasoline anti-dumping standards; and

(iv) No application may result in an alternative compliance period that extends beyond January 1, 2006, except as provided in paragraph (l) of this section.

(7) *Violations under this paragraph (k).* Any person who fails to meet a standard or other requirement under this

paragraph (k) shall be liable for penalties under § 80.5. Additionally, in the event that the refiner fails to achieve the required NO_X benefit calculated under paragraph (k)(3)(ii) of this section, any NO_X credits still banked under paragraph (k)(3)(iii) of this section shall be forfeit.

(l) *Special alternative anti-dumping averaging period provisions for small refineries*—(1) *Eligibility for petition.* A refiner who has been granted small refiner status under § 80.235 and who meets the eligibility requirements in paragraph (k)(1) of this section may petition for an alternative compliance period that is greater than five years and/or that extends beyond January 1, 2006, provided that such application is submitted by January 1, 2004. No application under this paragraph (l) may result in an alternative compliance period that extends beyond January 1, 2008.

(2) *Application process.* Applications must be submitted to the Administrator by January 1, 2004, to the following address: U.S. EPA—Attn: Anti-Dumping Compliance Period (6406J), 1200 Pennsylvania Avenue, NW, Washington, DC 20460 (certified mail/return receipt) or U.S. EPA—Attn: Anti-Dumping Compliance Period (6406J), Transportation & Regional Programs Division, 501 3rd Street, NW, Washington, DC 20001 (express mail/return receipt).

(3) *Contents of the application petition.* Each petition must include:

(i) The information and signed statements specified for all petitioners under § 80.101(k)(2);

(ii) A description of the hardships that make it infeasible, on a cost and/or technological basis, for the refinery to comply with an alternative anti-dumping compliance baseline of five years or less, or that ends on or before January 1, 2006.

(iii) A quarterly timeline, from the date of the application, indicating the expected NO_X emissions performance of the refinery's conventional gasoline, and the reasons for any expected non-compliance with the statutory baseline standard for NO_X on a quarterly basis (for example, a particular gasoline blendstock-producing unit not yet installed). The timeline shall include the date by which the refinery will produce conventional gasoline that complies with the annual average statutory NO_X baseline on a quarterly basis as determined according to § 80.101(k)(3)(ii).

(iv) A demonstration that the conditions for which the refinery was granted small refiner status under § 80.235 are still applicable.

(v) Information already submitted to the Administrator as part of a prior petition under paragraph (k) of this section, shall be updated if applicable.

(4) Approval or disapproval of petitions. The Administrator may approve a petition under this paragraph (l) if it includes information sufficient to demonstrate to the Administrator's satisfaction that cost and/or technological constraints make it infeasible for the refinery to comply with an alternative anti-dumping compliance baseline of five years or less, or that ends on or before January 1, 2006. The Administrator will approve or deny the petition in writing within six months of receipt. An approval will include any conditions or requirements to which the approval is subject.

(5) *Cessation of extended alternative compliance period.* (i) Refineries that qualify as small under § 80.223, and that later are disqualified under § 80.230(b), will be subject to the statutory anti-dumping baseline on an annual average basis beginning the calendar year immediately following the refinery's change in status.

(ii) If the Administrator finds that a refiner provided false or inaccurate information on its application for small refiner status, upon notice from the Administrator, the refiner's extended alternative compliance period will be void ab initio.

(6) *Compliance requirements for qualifying small refiners.* (i) If the refiner's application for an extended compliance period under this paragraph (l) is approved, then the refinery must comply with the statutory baseline NO_X standard, on average, for gasoline produced beginning by not later than the 19th quarter (for a six year compliance period) or by no later than the 22nd quarter (for a seven year compliance period).

(ii) The refinery must meet all other applicable requirements in paragraph

(k) of this section, including the production of a net NO_X benefit under paragraph (k)(3)(ii) of this section, except that the following provisions shall apply:

(A) For any cumulative NO_X deficit remaining at the expiration of the fifth year, based on the NO_X emission performance of gasoline actually produced at the refinery, and as calculated under paragraph (k)(3)(ii) of this section, the refiner shall provide an additional NO_X benefit equal to one half ton of NO_X emissions per ton of deficit remaining by the end of the refinery's alternative anti-dumping averaging period.

(B) For any cumulative NO_X deficit remaining at the expiration of the sixth year, based on the NO_X emission performance of gasoline actually produced at the refinery, and as calculated under paragraph (k)(3)(ii) of this section, the refiner shall provide an additional NO_X benefit equal to one ton of NO_X emissions per ton of deficit remaining by the end of the refinery's alternative anti-dumping averaging period.

(C) The additional NO_X benefits required under this paragraph (l)(6)(ii) of this section may come from the production of gasoline at the refinery that is cleaner than the statutory baseline or from the purchase and retirement of stationary source NO_X credits or allowances as provided in paragraph (k)(3)(iii) of this section.

[59 FR 7860, Feb. 16, 1994, as amended at 59 FR 36968, July 20, 1994; 60 FR 40008, Aug. 4, 1995; 62 FR 9884, Mar. 4, 1997; 62 FR 68207, Dec. 31, 1997; 64 FR 30910, June 9, 1999; 64 FR 37689, July 13, 1999; 65 FR 54431, Sept. 8, 2000; 66 FR 67107, Dec. 28, 2001; 67 FR 8738, Feb. 26, 2002; 68 FR 24307, May 6, 2003; 70 FR 74572, Dec. 15, 2005; 72 FR 8543, Feb. 26, 2007; 72 FR 60580, Oct. 25, 2007]

§ 80.102 [Reserved]

§ 80.103 Registration of refiners and importers.

Any refiner or importer of conventional gasoline must register with the Administrator in accordance with the provisions specified at § 80.76.

§ 80.104 Recordkeeping requirements.

Any parties in the gasoline distribution network shall maintain records containing the information as required by this section.

(a) For any refiner or importer, beginning in 1995, for each averaging period:

(1) Documents containing the information specified in paragraph (a)(2) of this section shall be obtained for:

(i) Each batch of conventional gasoline; and

(ii) Each batch of blendstock received in the case of any refiner that determines compliance on the basis of blendstocks properties under § 80.101(g)(3).

(2)(i) The results of tests performed in accordance with § 80.101(i);

(ii) The volume of the batch;

(iii) The batch number;

(iv) The date of production, importation or receipt;

(v) The designation regarding whether the batch is summer or winter gasoline;

(vi) The product transfer documents for any conventional gasoline produced or imported;

(vii) The product transfer documents for any conventional gasoline received;

(viii) For any gasoline blendstocks received by or transferred from a refiner or importer, documents that reflect:

(A) The identification of the product;

(B) The date the product was transferred; and

(C) The volume of product;

(ix) [Reserved]

(x) In the case of oxygenate that is added by a person other than the refiner or importer under § 80.101(d)(4)(ii)(B), documents that support the volume of oxygenate claimed by the refiner or importer, including the contract with the oxygenate blender and records relating to the audits, sampling and testing, and inspections of the oxygenate blender operation.

(xi) In the case of blendstocks that are included in refinery compliance calculations using the procedures under § 80.101(g)(3), documents that reflect the volume of blendstock and the volume of gasoline with which the blendstock is blended.

(xii) In the case of gasoline classified as previously certified gasoline under the terms of § 80.101(g)(9), the results of the tests to determine the properties

and volume of the previously certified gasoline when received at the refinery and records that reflect the storage and movement of the previously certified gasoline to the point the previously certified gasoline is used to produce conventional gasoline.

(xiii) In the case of gasoline subject to an approved petition under § 80.93(d), documents that reflect that the gasoline was produced or imported for use in Alaska, Hawaii, the Commonwealth of Puerto Rico, and the Virgin Islands, as applicable.

(xiv) In the case of butane blended into conventional gasoline under § 80.82, documentation of:

(A) The volume of the butane added;

(B) The volume of the gasoline prior to and subsequent to the butane blending;

(C) The purity and properties of the butane under § 80.82(c) and (d), as appropriate; and

(D) Compliance with the requirements of § 80.82.

(xv) In the case of any imported GTAB, documents that reflect the physical movement of the GTAB from the point of importation to the point of blending to produce gasoline.

(b) For all parties described in this section that produce and distribute gasoline, in the case of any interface or transmix used to produce conventional gasoline under § 80.84, records that reflect the results of any sampling and testing of conventional gasoline under § 80.84.

(1) Pipelines must keep records showing that the interface was designated in the proper manner according to the designations listed in § 80.84(b)(1).

(2) Transmix processors and transmix blenders must keep records showing that their transmix meets the definition in § 80.84(a)(2), or contains gasoline and distillate fuel only from the sources listed in § 80.84(e).

(3) Transmix processors must keep records showing the volumes of conventional gasoline recovered from transmix and the type and amount of any blendstock added, if applicable.

(4) Transmix blenders must keep records showing compliance with the quality assurance program and/or sampling and testing requirements in § 80.84(d)(2) or (d)(3) for each batch of conventional gasoline with which transmix is blended, the volume of the batch, and the volume of transmix blended into the batch.

(c) All parties in the gasoline distribution network shall retain the documents required in this section for a period of five years from the date the conventional gasoline or blendstock is produced or imported, and deliver such documents to the Administrator of EPA upon the Administrator's request.

[59 FR 7860, Feb. 16, 1994, as amended at 59 FR 36969, July 20, 1994; 62 FR 68208, Dec. 31, 1997; 66 FR 67107, Dec. 28, 2001; 67 FR 8738, Feb. 26, 2002; 70 FR 74573, Dec. 15, 2005; 71 FR 31963, June 2, 2006; 72 FR 60581, Oct. 25, 2007]

§ 80.105 Reporting requirements.

(a) Beginning with the 1995 averaging period, and for each subsequent averaging period, any refiner for each refinery or group of refineries at which any conventional gasoline is produced, and any importer that imports any conventional gasoline, shall submit to the Administrator a report which contains the following information:

(1) The total gallons of conventional gasoline produced or imported;

(2)–(3) [Reserved]

(4)(i) If using the simple model:

(A) The applicable exhaust benzene emissions standard under § 80.101(b)(1)(i);

(B) The average exhaust benzene emissions under § 80.101(g);

(C) The applicable sulfur content standard under § 80.101(b)(1)(ii) in parts per million;

(D) The average sulfur content under § 80.101(g) in parts per million;

(E) The difference between the applicable sulfur content standard under § 80.101(b)(1)(ii) in parts per million and the average sulfur content under paragraph (a)(4)(i)(D) of this section in parts per million, indicating whether the average is greater or lesser than the applicable standard;

(F) The applicable olefin content standard under § 80.101(b)(1)(iii) in volume percent;

(G) The average olefin content under § 80.101(g) in volume percent;

(H) The difference between the applicable olefin content standard under § 80.101(b)(1)(iii) in volume percent and

the average olefin content under paragraph (a)(4)(i)(G) of this section in volume percent, indicating whether the average is greater or lesser than the applicable standard;

(I) The applicable T90 distillation point standard under § 80.101(b)(1)(iv) in degrees Fahrenheit;

(J) The average T90 distillation point under § 80.101(g) in degrees Fahrenheit; and

(K) The difference between the applicable T90 distillation point standard under § 80.101(b)(1)(iv) in degrees Fahrenheit and the average T90 distillation point under paragraph (a)(4)(i)(J) of this section in degrees Fahrenheit, indicating whether the average is greater or lesser than the applicable standard.

(ii) If using the optional complex model, the applicable exhaust benzene emissions standard and the average exhaust benzene emissions, under § 80.101(b)(2) and (g).

(iii) If using the complex model:

(A) The applicable exhaust toxics emissions standard and the average exhaust toxics emissions, under § 80.101(b)(3) and (g); and

(B) The applicable NO_X emissions standard and the average NO_X emissions, under § 80.101(b)(3) and (g).

(5) The following information for each batch of conventional gasoline or batch of blendstock included under paragraph (a) of this section:

(i) The batch number;

(ii) The date of production;

(iii) The volume of the batch;

(iv) The grade of gasoline produced (i.e., premium, mid-grade, or regular);

(v) The properties, pursuant to § 80.101(i);

(vi) In the case of any previously certified gasoline used in a refinery operation under the terms of § 80.101(g)(9), the following information relative to the previously certified gasoline when received at the refinery:

(A) Identification of the previously certified gasoline as such;

(B) The batch number assigned by the receiving refinery;

(C) The date of receipt; and

(D) The volume, properties and designation of the batch;

(vii) In the case of butane blended with conventional gasoline under § 80.82:

(A) Identification of the butane batch as complying with the provisions of § 80.82;

(B) Identification of the butane batch as commercial or non-commercial grade butane;

(C) The batch number of the butane;

(D) The date of production of the gasoline produced using the butane;

(E) The volume of the butane batch;

(F) The properties of the butane batch specified by the butane supplier, or the properties specified in § 80.82(c) or (d), as appropriate.

(G) Where butane is blended with conventional gasoline during the period May 1 through September 15, the Reid vapor pressure, as measured using the appropriate test method in § 80.46; and

(viii) In the case of any imported GTAB, identification of the gasoline as GTAB.

(6) Such other information as EPA may require.

(7) For refiners that blend any butane with conventional gasoline under § 80.82, the report required under paragraph (a) of this section must include the following information for the annual averaging period:

(i) The total volume of butane blended with conventional gasoline;

(ii) The total volume of conventional gasoline produced using butane;

(iii) A statement that the gasoline produced using butane meets all applicable downstream standard that apply to conventional gasoline under Subpart E; and

(iv) A statement that all butane blended with conventional gasoline at the refinery is included in the volume under paragraph (a)(7)(i) of this section, or a statement that all butane blended with conventional gasoline is included in the refinery's annual average compliance calculations under § 80.101.

(b) The reporting requirements of paragraph (a) of this section do not apply in the case of any conventional gasoline or gasoline blendstock that is excluded from a refiner's or importer's compliance calculation pursuant to § 80.101(e).

(c) For each averaging period, each refiner for each refinery and importer

shall cause to be submitted to the Administrator of EPA, by May 31 of each year, a report in accordance with the requirements for the Attest Engagements of § 80.125 through § 80.131.

(d) The report required by paragraph (a) of this section shall be:

(1) Submitted on forms and following procedures specified by the Administrator of EPA;

(2) Submitted to EPA by the last day of February each year for the prior calendar year averaging period; and

(3) Signed and certified as correct by the owner or a responsible corporate officer of the refiner or importer.

[59 FR 7860, Feb. 16, 1994, as amended at 59 FR 36969, July 20, 1994; 60 FR 65575, Dec. 20, 1995; 66 FR 67108, Dec. 28, 2001; 67 FR 8738, Feb. 26, 2002; 70 FR 74573, Dec. 15, 2005]

§ 80.106 Product transfer documents.

(a)(1) On each occasion when any person transfers custody or title to any conventional gasoline, the transferor shall provide to the transferee documents which include the following information:

(i) The name and address of the transferor;

(ii) The name and address of the transferee;

(iii) The volume of gasoline being transferred;

(iv) The location of the gasoline at the time of the transfer;

(v) The date of the transfer; and

(vi) The following statement: ''This product does not meet the requirements for reformulated gasoline, and may not be used in any reformulated gasoline covered area.''

(2) The requirements of paragraph (a)(1) of this section apply to product that becomes gasoline upon the addition of oxygenate only.

(b) [Reserved]

[59 FR 7860, Feb. 16, 1994, as amended at 67 FR 8738, Feb. 26, 2002; 70 FR 74573, Dec. 15, 2005]

§§ 80.107–80.124 [Reserved]

Subpart F—Attest Engagements

SOURCE: 59 FR 7875, Feb. 16, 1994, unless otherwise noted.

§ 80.125 Attest engagements.

(a) Any refiner and importer subject to the requirements of this subpart F shall engage an independent certified public accountant, or firm of such accountants (hereinafter referred to in this subpart F as ''CPA''), to perform an agreed-upon procedures attestation engagement of the underlying documentation that forms the basis of the reports required by §§ 80.75 and 80.105.

(b) The CPA shall perform the attestation engagements in accordance with the Statements on Standards for Attestation Engagements.

(c) The CPA may complete the requirements of this subpart F with the assistance of internal auditors who are employees or agents of the refiner or importer, so long as such assistance is in accordance with the Statements on Standards for Attestation Engagements.

(d) Notwithstanding the requirements of paragraph (a) of this section, any refiner or importer may satisfy the requirements of this subpart F if the requirements of this subpart F are completed by an auditor who is an employee of the refiner or importer, provided that such employee:

(1) Is an internal auditor certified by the Institute of Internal Auditors, Inc. (hereinafter referred to in this subpart F as ''CIA''); and

(2) Completes the internal audits in accordance with the Codification of Standards for the Professional Practice of Internal Auditing.

(e) Use of a CPA or CIA who is debarred, suspended, or proposed for debarment pursuant to the Governmentwide Debarment and Suspension Regulations, 2 CFR part 1532, or the Debarment, Suspension, and Ineligibility Provisions of the Federal Acquisition Regulations, 48 CFR part 9, subpart 9.4, shall be deemed in noncompliance with the requirements of this section.

(f) The following documents are incorporated by reference: the Statements on Standards for Attestation Engagements, Codification of Statements on Auditing Standards, written by the American Institute of Certified Public Accountants, Inc., 1991, and published by the Commerce Clearing House, Inc., Identification Number

059021, and the Codification of Standards for the Professional Practice of Internal Auditing, written and published by the Institute of Internal Auditors, Inc., 1989, Identification Number ISBN 0–89413–207–5. These incorporations by reference were approved by the Director of the Federal Register in accordance with 5 U.S.C. 552(a) and 1 CFR part 51. Copies of the Statements on Standards for Attestation Engagements may be obtained from the American Institute of Certified Public Accountants, Inc., 1211 Avenue of the Americas, New York, New York 10036, and copies of the Codification of Standards for the Professional Practice of Internal Auditing may be obtained from the Institute of Internal Auditors, Inc., 249 Maitland Avenue, Altamonte Springs, Florida 32701–4201. Copies may be inspected at the U.S. Environmental Protection Agency, Office of the Air Docket, 401 M St., SW., Washington, DC., or at the National Archives and Records Administration (NARA). For information on the availability of this material at NARA, call 202–741–6030, or go to: *http://www.archives.gov/federal_register/code_of_federal_regulations/ibr_locations.html.*

[59 FR 7875, Feb. 16, 1994, as amended at 59 FR 36969, July 20, 1994; 70 FR 74573, Dec. 15, 2005; 71 FR 26701, May 8, 2006; 72 FR 2427, Jan. 19, 2007]

§ 80.126 Definitions.

The following definitions shall apply for the purposes of this subpart F:

(a) *Averaging compliance records* shall include the calculations used to determine compliance with relevant standards on average, for each averaging period and for each quantity of gasoline for which standards must be achieved separately.

(b) *Credit Trading Records.* Credit trading records shall include worksheets and EPA reports showing actual and complying totals for benzene; credit calculation worksheets; contracts; letter agreements; and invoices and other documentation evidencing the transfer of credits.

(c) *Designation records* shall include laboratory analysis reports that identify whether gasoline meets the requirements for a given designation; operational and accounting reports of product storage; and product transfer documents.

(d) *Oxygenate blender records* shall include laboratory analysis reports; refiner, importer and oxygenate blender contracts; quality assurance program records; product transfer documents; oxygenate purchasing, inventory, and usage records; and daily tank inventory gauging reports, meter tickets, and product transfer documents.

(e) *Product transfer documents* means copies of documents represented by the refiner/importer/oxygenate blender as having been provided to the transferee, and that reflect the transfer of ownership or physical custody of gasoline or blendstock (e.g., invoices, receipts, bills of lading, manifests, and/or pipeline tickets).

(f) *Tender* means the transfer of ownership or physical custody of a volume of gasoline or other petroleum product all of which has the same identification (reformulated gasoline, conventional gasoline, RBOB, and other non-finished-gasoline petroleum products), and characteristics (time and place of use restrictions for reformulated gasoline and RBOB).

(g) *Volume records* shall include summaries of gasoline produced or imported that account for the volume of each type of gasoline produced or imported. The volumes shall be based on tank gauges or meter reports and temperature adjusted to 60 degrees Fahrenheit.

(h) *Attestor* means the CPA or CIA performing the agreed-upon procedures engagement under this subpart.

(i) *Foot (or crossfoot)* means to add a series of numbers, generally in columns (or rows), to a total amount. When applying the attestation procedures in this subpart F, the attestor may foot to subtotals on a sample basis in those instances where subtotals (e.g., page totals) exist. In such instances, the total should be footed from the subtotals and the subtotals should be footed on a test basis using no less than 25% of the subtotals.

(j) *Laboratory Analysis* means the original test result for each analysis that was used to determine a product's properties. For laboratories using test methods that must be correlated to the

standard test method, the correlation factors and results shall be included as part of the laboratory analysis. For refineries or importers that produce reformulated gasoline or RBOB and use the 100% independent lab testing, the laboratory analysis shall consist of the results reported to the refinery or importer by the independent lab. Where assumed properties used (e.g., for butane) the assumed properties may serve as the test results.

(k) *Non-finished-gasoline petroleum products* means liquid petroleum products that have boiling ranges greater than 75 degrees Fahrenheit, but less than 450 degrees Fahrenheit, as per ASTM D 86 or equivalent.

(l) *Reporting period* means the time period relating to the reports filed with EPA by the refiner, importer, or oxygenate blender, and generally is the calendar year.

[59 FR 7875, Feb. 16, 1994, as amended at 70 FR 74574, Dec. 15, 2005; 71 FR 26701, May 8, 2006]

§ 80.127 Sample size guidelines.

In performing the attest engagement, the auditor shall sample relevant populations to which agreed-upon procedures will be applied using the methods specified in this section, which shall constitute a representative sample.

(a) Sample items shall be selected in such a way as to comprise a simple random sample of each relevant population; and

(b) Sample size shall be determined using one of the following options:

(1) *Option 1.* Determine the sample size using the following table:

SAMPLE SIZE, BASED UPON POPULATION SIZE

No. in population (N)	Sample size
66 and larger	29
41–65	25
26–40	20
0–25	N or 19, whichever is smaller.

(2) *Option 2.* Determine the sample size in such a manner that the sample size is equal to that which would result by using the following parameters and standard statistical methodologies:

Confidence Level—95%
Expected Error Rate—0%
Maximum Tolerable Error Rate—10%

(3) *Option 3.* The auditor may use some other form of sample selection and/or some other method to determine the sample size, provided that the resulting sample affords equal or better strength of inference and freedom from bias (as compared with paragraphs (b)(1) and (2) of this section), and that the auditor summarizes the substitute methods and clearly demonstrates their equivalence in the final report on the audit.

§ 80.128 Alternative agreed upon procedures for refiners and importers.

Prior to the attest report for the 2006 reporting period, the following minimum attest procedures may be carried out for a refinery or importer, in lieu of the attest procedures specified in § 80.133.

(a) Read the refiner's or importer's reports filed with EPA for the previous year as required by §§ 80.75, 80.83(g), and 80.105.

(b) Obtain a gasoline inventory reconciliation analysis for the current year from the refiner or importer which includes reformulated gasoline, RBOB, conventional gasoline, and non-finished-gasoline petroleum products.

(1) Test the mathematical accuracy of the calculations contained in the analysis.

(2) Agree the beginning and ending inventories to the refiner's or importer's perpetual inventory records.

(c) Obtain separate listings of all tenders during the current year of reformulated gasoline, RBOB, conventional gasoline, and non-finished-gasoline petroleum products.

(1) Test the mathematical accuracy of the calculations contained in the listings.

(2) Agree the listings of tenders' volumes to the gasoline inventory reconciliation in paragraph (b) of this section.

(3) Agree the listings of tenders' volumes, where applicable, to the EPA reports.

(d) Select a representative sample from the listing of reformulated gasoline tenders, and for this sample:

(1) Agree the volumes to the product transfer documents;

(2) Compare the product transfer documents designation for consistency

with the time and place, and compliance model designations for the tender (VOC-controlled or non-VOC-controlled, VOC region for VOC-controlled, summer or winter gasoline, and simple or complex model certified); and

(3) Trace back to the batch or batches in which the gasoline was produced or imported. Obtain the refiner's or importer's internal laboratory analyses for each batch and compare such analyses for consistency with the analyses results reported to EPA and to the time and place designations for the tender's product transfer documents.

(e) Select a representative sample from the listing of RBOB tenders, and for this sample:

(1) Agree the volumes to the original product transfer documents;

(2) Determine that the requisite contract was in place with the downstream blender designating the required blending procedures, or that the refiner or importer accounted for the RBOB using the assumptions in § 80.69(a)(8) in the case of RBOB designated as ''any oxygenate,'' or ''ether only,'' or using the assumptions in §§ 80.83(c)(1)(ii) (A) and (B) in the case of RBOB designated as ''any renewable oxygenate,'' ''non VOC controlled renewable ether only,'' or ''renewable ether only'';

(3) Review the product transfer documents for the indication of the type and amount of oxygenate required to be added to the RBOB;

(4) Trace back to the batch or batches in which the RBOB was produced or imported. Obtain refiner's or importer's internal lab analysis for each batch and agree the consistency of the type and volume of oxygenate required to be added to the RBOB with that indicated in applicable tender's product transfer documents;

(5) Agree the sampling and testing frequency of the refiner's or importer's downstream oxygenated blender quality assurance program with the sampling and testing rates as required in § 80.69(a)(7); and

(6) In the case of RBOB designated as ''any renewable oxygenate,'' ''non VOC controlled renewable ether'' or ''renewable ether only'', review the documentation from the producer of the oxygenate to determine if the oxygenate meets the requirements of § 80.83(a).

(f) Select a representative sample of reformulated gasoline and RBOB batches produced by computerized inline blending, and for this sample:

(1) Obtain the composite sample internal laboratory analyses results; and

(2) Agree the results of the internal laboratory analyses to the quarterly batch information submitted to the EPA.

(g) Select a representative sample from the listing of the tenders of conventional gasoline and conventional gasoline blendstock that becomes gasoline through the addition of oxygenate only, and for this sample:

(1) Agree the volumes to the product transfer documents;

(2) For a representative sample of tenders, trace back to the batch or batches in which the gasoline was produced or imported. Obtain the refiner's or importer's internal laboratory analyses for each batch and compare such analyses for consistency with the analyses results reported to EPA; and

(3) Where the refiner or importer has included oxygenate that is blended downstream of the refinery or import facility in its compliance calculations in accordance with § 80.101(d)(4)(ii), obtain a listing of each downstream oxygenate blending operation from which the refiner or importer is claiming oxygenate for use in compliance calculations, and for each such operation:

(i) Determine if the refiner or importer had a contract in place with the downstream blender during the period oxygenate was blended;

(ii) Determine if the refiner or importer has records reflecting that it conducted physical inspections of the downstream blending operation during the period oxygenate was blended;

(iii) Obtain a listing from the refiner or importer of the batches of conventional gasoline or conventional sub-octane blendstock, and the compliance calculations which include oxygenate blended by the downstream oxygenate blender, and test the mathematical accuracy of the calculations contained in this listing;

(iv) Obtain a listing from the downstream oxygenate blender of the oxygenate blended with conventional gasoline or sub-octane blendstock that was produced or imported by the refiner or

importer. Test the mathematical accuracy of the calculations in this listing. Agree the overall oxygenate blending listing obtained from the refiner or importer with the listing obtained from the downstream oxygenate blender. Select a representative sample of oxygenate blending listing obtained from the downstream oxygenate blender, and for this sample:

(A) Using product transfer documents, determine if the oxygenate was blended with conventional gasoline or conventional sub-octane blendstock that was produced by the refiner or imported by the importer; and

(B) Agree the oxygenate volume with the refiner's or importer's listing of oxygenate claimed for this gasoline;

(v) Obtain a listing of the sampling and testing conducted by the refiner or importer over the downstream oxygenate blending operation. Select a representative sample of the test results from this listing, and for this sample agree the tested oxygenate volume with the oxygenate use listings from the refiner or importer, and from the oxygenate blender; and

(vi) Obtain a copy of the records reflecting the refiner or importer audit over the downstream oxygenate blending operation. Review these records for indications that the audit included review of the overall volumes and type of oxygenate purchased and used by the oxygenate blender to be consistent with the oxygenate claimed by the refiner or importer and that this oxygenate was blended with the refiner's or importer's gasoline or blending stock.

[59 FR 7875, Feb. 16, 1994, as amended at 59 FR 36969, July 20, 1994; 59 FR 39292, Aug. 2, 1994; 62 FR 60136, Nov. 6, 1997; 67 FR 8738, Feb. 26, 2002; 70 FR 74574, Dec. 15, 2005]

EFFECTIVE DATE NOTE: At 59 FR 39292, Aug. 2, 1994, § 80.128 was amended by revising paragraphs (a) and (e)(2); removing ''and'' at the end of paragraph (e)(4); removing the period at the end of paragraph (e)(5) and adding ''; and'' in its place; and adding paragraph (e)(6) effective September 1, 1994. At 59 FR 60715, Nov. 28, 1994, the amendment was stayed effective September 13, 1994. At 70 FR 74574, Dec. 15, 2005, § 80.128 was amended by revising paragraphs (e)(2), (e)(4) and (e)(5) and removing paragraph (e)(6); however, the amendment could not be incorporated because those paragraphs are stayed. At 71 FR 26702, May 8, 2006, § 80.128 was amended by revising paragraph (e)(2); however, the amendment could not be incorporated because that paragraph is stayed. At 72 FR 8543, Feb. 26, 2007, § 80.128 was amended by revising paragraph (a); however, the amendment could not be incorporated because that paragraph is stayed.

§ 80.129 [Reserved]

§ 80.130 Agreed upon procedures reports.

(a) *Reports*. (1) The CPA or CIA shall issue to the refiner or importer a report summarizing the procedures performed in the findings in accordance with the attest engagement or internal audit performed in compliance with this subpart.

(2) The refiner or importer shall provide a copy of the auditor's report to the EPA within the time specified in § 80.75(m).

(b) *Record retention*. The CPA or CIA shall retain all records pertaining to the performance of each agreed upon procedure and pertaining to the creation of the agreed upon procedures report for a period of five years from the date of creation and shall deliver such records to the Administrator upon request.

[59 FR 7875, Feb. 16, 1994, as amended at 71 FR 26702, May 8, 2006]

§ 80.131 Agreed upon procedures for GTAB, certain conventional gasoline imported by truck, previously certified gasoline used to produce gasoline, and butane blenders.

(a) *Attest procedures for GTAB*. The following are the attest procedures to be carried out in the case of an importer who imports gasoline classified as blendstock (or ''GTAB'') under the terms of § 80.83:

(1) Obtain a listing of all GTAB volumes imported for the reporting period. Agree the total volume of GTAB from the listing to the inventory reconciliation analysis under § 80.133, or agree to alternative documents if the inventory reconciliation analysis is not sufficient.

(2) Obtain a listing of all GTAB batches reported to EPA by the importer. Agree the total volume of GTAB from the listing to the GTAB volumes reported to EPA. Note that the EPA report includes a notation that the batch is not included in the

compliance calculations because the imported product is GTAB. Also, agree these volumes to the Import Summary received from the U.S. Customs Service.

(3) Select a sample, in accordance with the guidelines in § 80.127, from the listing of GTAB batches obtained in paragraph (a)(2) of this section, and for each GTAB batch selected perform the following:

(i) Trace the GTAB batch to the tank activity records. From the tank activity records, determine the volumes of conventional gasoline and of RFG produced. Agree the volumes from the tank activity records to the batch volume reported to the EPA as reformulated or conventional gasoline.

(ii) Agree the location of the refinery represented by the tank activity records obtained in paragraph (a)(3)(i) of this section for the gasoline produced from GTAB, to the location that the GTAB arrived in the U.S. or at a facility to which GTAB is directly transported from the import facility using records representing location (e.g., U.S. Customs Service entry records). Using product transfer records, trace volumes transported from the import facility directly to the refinery as applicable.

(iii) Obtain tank activity records for all batches of GTAB received and blended. Using the tank activity records, determine whether the GTAB was received into an empty tank, or into a tank containing other GTAB imported by that importer or finished gasoline of the same category as the gasoline that will be produced using the GTAB or into a tank containing blendstock.

(iv) Using the tank activity records obtained under paragraph (a)(3)(iii) of this section, determine the volume of any tank bottom (beginning tank inventory) that is previously certified gasoline before GTAB is added to the tank. Using lab reports, batch reports, or product transfer documents, determine the properties of the tank bottom.

(v) Determine whether the properties and volume of gasoline produced using GTAB were determined in a manner that excludes the volume and properties of any gasoline that previously has been included in any refiners or importers compliance calculations, as follows:

(A) Note documented tank mixing procedures.

(B) Determine the volume and properties of the gasoline contained in the storage tank after blending is complete. Mathematically subtract the volume and properties of the previously certified gasoline to determine the volume and properties of the GTAB plus blendstock added. Agree the volume and properties of the GTAB plus blendstock added to the volume reported to EPA as a batch of gasoline produced; or

(C) In the alternative, using the tank activity records, note that only GTAB and blending components were combined, and that no gasoline was added to the tank. Agree the volumes and properties of the shipments from the tank after the GTAB and blendstock are added, blended, and sampled and tested, to the volumes and properties reported to the EPA by the refiner.

(vi) Obtain the importer's laboratory analysis for each batch of GTAB selected, and agree the properties listed in the corresponding batch report submitted to the EPA, to the laboratory analysis.

(b) *Attest procedures for certain truck imports.* The following are the attest procedures to be carried out in the case of an importer who imports conventional gasoline into the United States by truck using the sampling and testing option in § 80.101(i)(3) (''§ 80.101(i)(3) truck imports'').

(1) Obtain a listing of all volumes of § 80.101(i)(3) truck imports for the reporting period. Agree the total volume of § 80.101(i)(3) truck imports from the listing to the inventory reconciliation analysis under § 80.132.

(2) Obtain a listing of all § 80.101(i)(3) truck import batches reported to EPA by the importer. Agree the total volume of § 80.101(i)(3) truck imports from the listing to the volume of § 80.101(i)(3) truck imports reported to EPA. Also, agree these totals to the Import Summary received from the U.S. Customs Service.

(3) Select a sample, in accordance with the guidelines in § 80.127, from the listing obtained in paragraph (b)(2) of this section, and for each § 80.101(i)(3)

truck import batch selected perform the following:

(i) Obtain the copy of the terminal test results for the batch, under § 80.101(i)(3)(iii)(A), and determine that the sample was analyzed using the test methods specified in § 80.46, and agree the terminal test results to the batch properties reported to EPA; and

(ii) Obtain tank activity records for the terminal storage tank showing receipts, discharges, and sampling, and determine that the sample under paragraph (b)(3)(i) of this section was collected subsequent to the most recent receipt into the storage tank.

(4) Obtain listings for each terminal where § 80.101(i)(3) truck import gasoline was loaded, of all quality assurance samples collected by the importer, and for each terminal select a sample in accordance with the guidelines in § 80.127 from the listing. For each quality assurance sample selected perform the following:

(i) Determine that the sample was analyzed by the importer or by an independent laboratory, and that the analysis was performed using the test methods specified in § 80.46;

(ii) Obtain the terminal's test results that correspond in time to the time the quality assurance sample was collected, and agree the terminal's test results with the quality assurance test results; and

(iii) Determine that the quality assurance sample was collected within the frequency specified in § 80.101(i)(3)(iv)(D).

(c) *Attest procedures for previously certified gasoline*. The following are the attest procedures to be carried out in the case of a refiner who uses previously certified gasoline under the requirements of §§ 80.65(i) and 80.101(g)(9).

(1) Obtain a listing of all batches of previously certified gasoline used under the requirements of § 80.65(i) which were received at the refinery during the reporting period. Agree the total volume of such previously certified gasoline from the listing to the inventory reconciliation analysis under § 80.133, or agree to alternative documents if the inventory reconciliation analysis is not sufficient.

(2) Obtain a listing of all previously certified gasoline batches reported to EPA by the refiner. Agree the total volume of previously certified gasoline from the listing of previously certified gasoline received in paragraph (c)(1) of this section to the volume of previously certified gasoline reported to EPA.

(3) Select a sample, in accordance with the guidelines in § 80.127, from the listing obtained in paragraph (c)(2) of this section, and for each previously certified gasoline batch selected perform the following:

(i) Trace the previously certified gasoline batch to the tank activity records. Confirm that the previously certified gasoline was included in a batch of reformulated or conventional gasoline produced at the refinery.

(ii) Obtain the refiner's laboratory analysis and volume measurement for the previously certified gasoline when received and agree the properties and volume listed in the corresponding batch report submitted to the EPA, to the laboratory analysis and volume measurements.

(iii) Obtain the product transfer documents for the previously certified gasoline when received and agree the designations from the product transfer documents to designations in the corresponding batch report submitted to EPA (reformulated gasoline, RBOB or conventional gasoline, and designations regarding VOC control).

(d) *Attest procedures for butane blenders*. The following are the attest procedures to be carried out by a refiner who blends butane under § 80.82.

(1) Obtain a listing of all butane batches received at the refinery during the reporting period.

(2) Obtain a listing of all butane batches reported to EPA by the refiner for the reporting period. Agree the total volume of butane from the receipt listing to the volume of butane reported to EPA.

(3) Select a sample, in accordance with the guidelines in § 80.127, from the listing of butane batches reported to EPA, and for each butane batch selected perform the following:

(i) Trace the butane included in the batch to the documents provided to the refiner by the butane supplier for the butane. Determine, and report as a

finding, whether these documents establish the butane was commercial grade, non-commercial grade, or neither commercial nor non-commercial grade as defined in § 80.82.

(ii) In the case of non-commercial grade butane, obtain the refiner's sampling and testing results for butane, and confirm that the frequency of the sampling and testing was consistent with the requirements in § 80.82.

[70 FR 74574, Dec. 15, 2005]

§ 80.132 [Reserved]

§ 80.133 Agreed-upon procedures for refiners and importers.

The following are the minimum attest procedures that shall be carried out for each refinery and importer. Agreed upon procedures may vary from the procedures stated in this section due to the nature of the refiner's or importer's business or records, provided that any refiner or importer desiring to use modified procedures obtains prior approval from EPA.

(a) *EPA reports.* (1) Obtain and read a copy of the refinery's or importer's reports (except for batch reports) filed with the EPA as required by §§ 80.75 and 80.105 for the reporting period.

(2) In the case of a refiner's report to EPA that represents aggregate calculations for more than one refinery, obtain the refinery-specific volume and property information that was used by the refiner to prepare the aggregate report. Foot and crossfoot the refinery-specific totals and agree to the values in the aggregate report. The procedures in paragraphs (b) through (m) of this section then are performed separately for each refinery.

(3) Obtain a written representation from a company representative that the report copies are complete and accurate copies of the reports filed with the EPA.

(4) Identify, and report as a finding, the name of the commercial computer program used by the refiner or importer to track the data required by the regulations in this part, if any.

(b) *Inventory reconciliation analysis.* Obtain an inventory reconciliation analysis for the refinery or importer for the reporting period by product type (i.e., reformulated gasoline, RBOB, conventional gasoline, and non-finished-gasoline petroleum products), and perform the following:

(1) Foot and crossfoot the volume totals reflected in the analysis; and

(2) Agree the beginning and ending inventory amounts in the analysis to the refinery's or importer's inventory records. If the analysis shows no production of conventional gasoline or if the refinery or importer represents under paragraph (l) of this section that it has a baseline less stringent or equal to the statutory baseline, the analysis may exclude non-finished-gasoline petroleum products.

(3) Report as a finding the volume totals for each product type.

(c) *Listing of tenders.* For each product type other than non-finished gasoline petroleum products (i.e., reformulated gasoline, RBOB, conventional gasoline), obtain a separate listing of all tenders from the refinery or importer for the reporting period. Each listing should provide for each tender the volume shipped and other information as needed to distinguish tenders. Perform the following:

(1) Foot to the volume totals per the listings; and

(2) For each product type listed in the inventory reconciliation analysis obtained in paragraph (b) of this section, agree the volume total on the listing to the tender volume total in the inventory reconciliation analysis.

(d) *Listing of batches.* For each product type other than non-finished gasoline petroleum products (i.e., reformulated gasoline, RBOB, and conventional gasoline), obtain separate listings of all batches reported to the EPA and perform the following:

(1) Foot to the volume totals per the listings; and

(2) Agree the total volumes in the listings to the production volume in the inventory reconciliation analysis obtained in paragraph (b) of this section.

(e) *Reformulated gasoline tenders.* Select a sample, in accordance with the guidelines in § 80.127, from the listing of reformulated gasoline tenders obtained in paragraph (c) of this section, and for each tender selected perform the following:

(1) Obtain product transfer documents associated with the tender and agree the volume on the tender listing to the volume on the Product transfer documents; and

(2) Note whether the product transfer documents evidencing the date and location of the tender and the compliance model designations for the tender (VOC-controlled for Region 1 or 2, non VOC-controlled, and simple or complex model certified).

(f) *Reformulated gasoline batches.* Select a sample, in accordance with the guidelines in § 80.127, from the listing of reformulated gasoline batches obtained in paragraph (d) of this section, and for each batch selected perform the following:

(1) Agree the volume shown on the listing, to the volume listed in the corresponding batch report submitted to EPA; and

(2) Obtain the refinery's or importer's laboratory analysis and agree the properties listed in the corresponding batch report submitted to EPA, to the properties listed in the laboratory analysis.

(g) *RBOB tenders.* Select a sample, in accordance with the guidelines in § 80.127, from the listing of RBOB tenders obtained in paragraph (c) of this section, and for each tender selected perform the following:

(1) Obtain product transfer documents associated with the tender and agree the volume on the tender listing to the volume on the product transfer documents; and

(2) Inspect the product transfer documents evidencing the type and amount of oxygenate to be added to the RBOB.

(h) *RBOB batches.* Select a sample, in accordance with the guidelines in § 80.127, from the listing of RBOB batches obtained in paragraph (d) of this section, and for each batch selected perform the following:

(1) Obtain from the refiner or importer the oxygenate type and volume, and oxygen volume required to be hand blended with the RBOB, in accordance with § 80.69(a)(2).

(2) Agree the volume shown on the listing, as adjusted to reflect the oxygenate volume determined under paragraph (h)(1) of this section, to the volume listed in the corresponding batch report submitted to EPA; and

(3) Obtain the refinery's or importer's laboratory analysis of the RBOB hand blend and agree:

(i) The oxygenate type and oxygen amount determined under paragraph (h)(1) of this section, to the tested oxygenate type and oxygen amount listed in the laboratory analysis within the acceptable ranges set forth at § 80.65(e)(2)(i); and

(ii) The properties listed in the corresponding batch report submitted to EPA to the properties listed in the laboratory analysis.

(4) Perform the following procedures for each batch report included in paragraph (h)(4)(i)(B) of this section:

(i) Obtain and inspect a copy of the executed contract with the downstream oxygenate blender (or with an intermediate owner), and confirm that the contract:

(A) Was in effect at the time of the corresponding RBOB transfer; and

(B) Allowed the company to sample and test the reformulated gasoline made by the blender.

(ii) Obtain a listing of RBOB blended by downstream oxygenate blenders and the refinery's or importer's oversight test results, and select a representative sample, in accordance with the guidelines in § 80.127, from the listing of test results and for each test selected perform the following:

(A) Obtain the laboratory analysis for the batch, and agree the type of oxygenate used and the oxygenate content appearing in the laboratory analysis to the instructions stated on the product transfer documents corresponding to a RBOB receipt immediately preceding the laboratory analysis and used in producing the reformulated gasoline batch selected within the acceptable ranges set forth at § 80.65(e)(2)(i);

(B) Calculate the frequency of sampling and testing or the volume blended between the test selected and the next test; and

(C) Agree the frequency of sampling and testing or the volume blended between the test selected and the next test to the sampling and testing frequency rates stated in § 80.69(a)(7).

(i) *Conventional gasoline and conventional gasoline blendstock tenders.* Select

a sample, in accordance with the guidelines in § 80.127, from the listing of the tenders of conventional gasoline and conventional gasoline blendstock that becomes gasoline through the addition of oxygenate only, and for each tender selected perform the following:

(1) Obtain product transfer documents associated with the tender and agree the volume on the tender listing to the volume on the product transfer documents; and

(2) Inspect the product transfer documents evidencing that the information required in § 80.106(a)(1)(vii) is included.

(j) *Conventional gasoline batches.* Select a sample, in accordance with the guidelines in § 80.127, from the conventional gasoline batch listing obtained in paragraph (d) of this section, and for each batch selected perform the following:

(1) Agree the volume shown on the listing, to the volume listed in the corresponding batch report submitted to EPA; and

(2) Obtain the refinery's or importer's laboratory analysis and agree the properties listed in the corresponding batch report submitted to EPA, to the properties listed in the laboratory analysis.

(k) *Conventional gasoline oxygenate blending.* Obtain a listing of each downstream oxygenate blending facility and its blender, as represented by the refiner/importer, as adding oxygenate used in the compliance calculations for the refinery or importer, or a written representation from the refiner for the refinery or importer that it has not used any downstream oxygenate blending in its conventional gasoline compliance calculations.

(1) For each downstream oxygenate blender facility, obtain a listing from the refiner or importer of the batches of oxygenate included in its compliance calculations added by the downstream oxygenate blender and foot to the total volume of batches per the listing;

(2) Obtain a listing from the downstream oxygenate blender of the oxygenate blended with conventional gasoline or sub-octane blendstock that was produced or imported by the refinery or importer and perform the following:

(i) Foot to the total volume of the oxygenate batches per the listing; and

(ii) Agree the total volumes in the listing obtained from the downstream oxygenate blender, to the listing obtained from the refiner or importer in paragraph (k)(1) of this section.

(3) Where the downstream oxygenate blender is a person other than the refiner or importer, as represented by management of the refinery or importer, perform the following:

(i) Obtain the contract from the refiner or importer with the downstream blender and inspect the contract evidencing that it covered the period when oxygenate was blended;

(ii) Obtain company documents evidencing that the refiner or importer has records reflecting that it conducted physical inspections of the downstream blending operation during the period oxygenate was blended;

(iii) Obtain company documents reflecting the refiner or importer audit over the downstream oxygenate blending operation and note whether these records evidencing the audit included a review of the overall volumes and type of oxygenate purchased and used by the oxygenate blender to be consistent with the oxygenate claimed by the refiner or importer, and that this oxygenate was blended with the refinery's or importer's gasoline or blending stock; and

(iv) Obtain a listing of test results for the sampling and testing conducted by the refiner or importer over the downstream oxygenate blending operation, and select a sample, in accordance with the guidelines in § 80.127, from this listing. For each test selected, agree the tested oxygenate volume with the oxygenate volume in the listing obtained from the oxygenate blender in paragraph (k)(2) of this section for this gasoline.

[70 FR 74576, Dec. 15, 2005, as amended at 71 FR 26702, May 8, 2006]

§§ 80.134–80.135 [Reserved]

Subpart G—Detergent Gasoline

SOURCE: 59 FR 54706, Nov. 1, 1994, unless otherwise noted.

§ 80.140 Definitions.

The definitions in this section apply only to subpart G of this part. Any

terms not defined in this subpart shall have the meaning given them in 40 CFR part 80, subpart A, or, if not defined in 40 CFR part 80, subpart A, shall have the meaning given them in 40 CFR part 79, subpart A.

Additization means the addition of detergent to gasoline or post-refinery component in order to create detergent-additized gasoline or detergent-additized post-refinery component.

Automated detergent blending facility means any facility (including, but not limited to, a truck or individual storage tank) at which detergent is blended with gasoline or post-refinery component, by means of an injector system calibrated to automatically deliver a prescribed amount of detergent.

Base gasoline means any gasoline that does not contain detergent.

Carburetor deposits means the deposits formed in the carburetor during operation of a carburetted gasoline engine which can disrupt the ability of the carburetor to maintain the proper air/fuel ratio.

Carrier of detergent means any distributor of detergent who transports or stores or causes the transportation or storage of detergent without taking title to or otherwise having any ownership of the detergent, and without altering either the quality or quantity of the detergent.

Deposit control effectiveness means the ability of a detergent additive package to prevent the formation of deposits in gasoline engines.

Deposit control efficiency means the degree to which a detergent additive package at a given concentration in gasoline is effective in limiting the formation of deposits. The addition of inactive ingredients to a detergent additive package, to the extent that this addition dilutes the concentration of the detergent-active components, reduces the deposit control efficiency of the package.

Detergent additive package means any chemical compound or combination of chemical compounds, including carrier oils, that may be added to gasoline, or to post-refinery component blended with gasoline, in order to control deposit formation. Carrier oil means an oil that may be added to the package to mediate or otherwise enhance the detergent chemical's ability to control deposits. A detergent additive package may contain non-detergent-active components such as corrosion inhibitors, antioxidants, metal deactivators, and handling solvents.

Detergent blender means any person who owns, leases, operates, controls or supervises the blending operation of a detergent blending facility, or imports detergent-additized gasoline or detergent-additized post-refinery component.

Detergent blending facility means any facility (including, but not limited to, a truck or individual storage tank) at which detergent is blended with gasoline or post-refinery component.

Detergent-active components means the components of a detergent additive package which act to prevent the formation of deposits, including, but not necessarily limited to, the actual detergent chemical and any carrier oil (if present) that acts to enhance the detergent's ability to control deposits.

Detergent-additized gasoline (also called *detergent gasoline*) means any gasoline that contains base gasoline and detergent.

Detergent-additized post-refinery component means any post-refinery component that contains detergent.

Distributor of detergent means any person who transports or stores or causes the transportation or storage of detergent at any point between its manufacture and its introduction into gasoline.

Fuel injector deposits (also known as *port fuel injector deposits* or *PFID*) means the deposits formed on fuel injector(s) during and after operation of a gasoline engine, as evaluated by the reduction in the gasoline flow rate through the fuel injector(s).

Gasoline means any fuel for use in motor vehicles and motor vehicle engines, including both highway and off-highway vehicles and engines, and commonly or commercially known or sold as gasoline. The term ''gasoline'' is inclusive of base gasoline, detergent gasoline, and base gasoline or detergent gasoline that has been commingled with post-refinery component.

Hand blending detergent facility means any facility (including, but not limited to, a truck or individual storage tank)

at which detergent is blended with gasoline or post-refinery component by the manual addition of detergent, or at which detergent is blended with these substances by any means that is not automated.

Intake valve deposits (*IVD*) means the deposits formed on the intake valve(s) during operation of a gasoline engine, as evaluated by weight.

Leaded gasoline means gasoline which is produced with the use of any lead additive or which contains more than 0.05 gram of lead per gallon or more than 0.005 gram of phosphorus per gallon.

Manufacturer of detergent means any person who owns, leases, operates, controls, or supervises a facility that manufactures detergent. Pursuant to the definition in 40 CFR 79.2(f), a manufacturer of detergent is also considered an additive manufacturer.

Post-refinery component means any gasoline blending stock or any oxygenate which is blended with gasoline subsequent to the gasoline refining process.

Repeatability of a test method means the amount of random error which is expected to affect the results obtained for a given test substance, when the test is replicated by a single operator in a given laboratory within a short period of time, using the same apparatus under constant operating conditions. Quantitatively, it is the difference between two such single results that would be exceeded in the long run in only one out of twenty normal and correct replications of the test method.

[59 FR 54706, Nov. 1, 1994, as amended at 61 FR 35356, July 5, 1996]

§ 80.141 Interim detergent gasoline program.

(a) *Effective dates of requirements.* (1) Until June 30, 1997, the products listed in paragraphs (a)(1)(i) through (iii) of this section must comply with either the interim program requirements described in this section or the certification program requirements described in § 80.161. Beginning July 1, 1997, the listed products must comply with the requirements in § 80.161. These dates and requirements apply to:

(i) All gasoline sold or transferred to a party who sells or transfers gasoline to the ultimate consumer;

(ii) All additized post-refinery component (PRC); and

(iii) All detergent additives sold or transferred for use in gasoline or PRC for compliance with the requirements of this subpart.

(2) Until July 31, 1997, all gasoline sold or transferred to the ultimate consumer must contain detergent additive(s) meeting either the interim requirements of this § 80.141 or the certification program requirements of § 80.161. Beginning August 1, 1997, such gasoline must contain detergent additive(s) meeting the certification requirements of § 80.161.

(b) *Applicability of gasoline and PRC detergency requirement; responsible parties.* (1) Except as specifically exempted in § 80.160, the detergency requirements of this subpart apply to all gasoline, whether intended for on-highway or nonroad use, including conventional, reformulated, oxygenated, and leaded gasolines, as well as the gasoline component of fuel mixtures of gasoline and alcohol fuels, gasoline used as marine fuel, gasoline service accumulation fuel (as described in § 86.113–94(a)(1) of this chapter), the gasoline component of fuel mixtures of gasoline and methanol used for service accumulation in flexible fuel vehicles (as described in § 86.113–94(d) of this chapter), gasoline used for factory fill purposes, and all additized PRC.

(2) Pursuant to paragraphs (c) through (f) of this section, compliance with these requirements is the responsibility of parties who directly or indirectly sell or dispense gasoline to the ultimate consumer as well as parties who manufacture, supply, or transfer detergent additives or detergent-additized post-refinery components.

(c) *Detergent registration requirements.* To be eligible for use by fuel manufacturers in complying with the gasoline detergency requirements of this subpart, a detergent additive package must be registered by its manufacturer under 40 CFR part 79 according to the specifications in paragraphs (c) (1) through (3) of this section. After evaluating the adequacy of registration data provided by the detergent manufacturer pursuant to these requirements, if EPA finds the data to be deficient, EPA may disqualify the detergent

package for use in complying with the gasoline detergency requirements of this subpart, under the provisions of paragraph (g) of this section.

(1) *Compositional data.* The compositional data supplied to EPA by the additive manufacturer for purpose of registering a detergent additive package under § 79.21(a) of this chapter must include:

(i) A complete listing of the components of the detergent additive package, using standard chemical nomenclature when possible or providing the chemical structure of any component for which the standard chemical name is not precise. Polymeric components may be reported as the product of other chemical reactants, provided that the supporting data specified in § 80.162(b) is also reported for such components.

(ii) The weight and/or volume percent (as applicable) of each component of the package, with variability in these amounts restricted according to the provisions of paragraph (c)(2) of this section.

(iii) For each detergent-active component of the package, classification into one of the following designations:

(A) Polyalkyl amine;

(B) Polyether amine;

(C) Polyalkylsuccinimide;

(D) Polyalkylaminophenol;

(E) Detergent-active carrier oil; and

(F) Other detergent-active component.

(2) *Allowable variation in compositional data.* (i) A single detergent additive registration may contain no variation in the identity of any of the detergent-active components identified pursuant to paragraph (c)(1)(iii) of this section.

(ii) A single detergent additive registration may specify a range of concentrations for identified detergent-active components, provided that, if each such component were present in the detergent additive package at the lower bound of its reported range of concentration, the minimum recommended concentration reported in accordance with the requirements of paragraph (c)(3) of this section would still provide the deposit control effectiveness claimed by the detergent registrant.

(iii) The identity or concentration of non-detergent-active components of the detergent additive package may vary under a single registration, provided that the range of such variation is specified in the registration, and that such variability does not reduce the deposit control effectiveness of the additive package as compared with the level of effectiveness claimed by the detergent registrant pursuant to the requirements of paragraph (c)(3) of this section.

(iv) Except as provided in paragraph (c)(2)(v) of this section, detergent additive packages which do not satisfy these restrictions must be separately registered. EPA may disqualify an additive for use in satisfying the requirements of this subpart if EPA determines that the variability included within a given detergent additive registration may reduce the deposit control effectiveness of the detergent package such that it could invalidate the minimum recommended concentration reported in accordance with the requirements of paragraph (c)(3) of this section.

(v) A change in minimum concentration requirements resulting from a modification of detergent additive composition shall not require a new detergent additive registration or a change in existing registration if:

(A) The modification is effected by a detergent blender only for its own use or for the use of parties which are subsidiaries of, or share common ownership with, the blender, and the modified detergent is not sold or transferred to other parties; and

(B) The modification is a dilution of the additive for the purpose of ensuring proper detergent flow in cold weather; and

(C) Gasoline is the only diluting agent used; and

(D) The diluted detergent is subsequently added to gasoline at a rate that attains the detergent's registered minimum recommended concentration, taking into account the dilution; and

(E) EPA is notified, either before or within seven days after the dilution action, of the identity of the detergent, the identity of the diluting material,

the amount or percentage of the dilution, the change in treat rate necessitated by the dilution, and the locations and time period of diluted detergent usage. The notification shall be sent or faxed to the address in § 80.174(c).

(3) *Minimum recommended concentration*. (i) The lower boundary of the recommended range of concentration for the detergent additive package in gasoline, which the additive manufacturer must report pursuant to the registration requirements in § 79.21(d) of this chapter, must equal or exceed the minimum concentration which the manufacturer has determined to be necessary for the control of deposits in the associated fuel type, pursuant to paragraph (e) of this section. The minimum recommended concentration shall be provided to EPA in units of gallons of detergent additive package per thousand gallons of gasoline or PRC, reported to four digits. This concentration is the lowest additive concentration (LAC) referred to elsewhere in this subpart.

(ii) The minimum concentration reported in the detergent registration according to the provisions of paragraph (c)(3)(i) of this section must also be communicated in writing by the additive manufacturer to each fuel manufacturer who purchases the subject detergent for purpose of compliance with the gasoline detergency requirements of this subpart, and to any additive manufacturer who purchases the subject additive with the intent of reselling it to a fuel manufacturer for this purpose.

(iii) Pursuant to the requirements of paragraph (e) of this section, EPA may require the additive manufacturer to submit data to support the deposit control effectiveness of the detergent package at the specified minimum effective concentration. EPA may disqualify an additive for use in satisfying the requirements of this subpart upon finding that the supporting data is inadequate. Manufacturers may be subject to the liabilities and enforcement actions in §§ 80.156 and 80.159 if such a finding is made.

(iv) Once included in the registration for a detergent additive package, the minimum concentration recommended by the detergent manufacturer to detergent blenders and other users of the detergent additive, pursuant to paragraph (c)(3)(ii) of this section, may not be changed without first notifying EPA. The notification must be sent by certified mail to the address specified in § 80.174(b). Changes to the minimum recommended concentration must be supported by available test data pursuant to paragraph (c)(3)(iii) of this section.

(v) A manufacturer may use a single set of test data to demonstrate the deposit control effectiveness of more than one registered detergent additive product, provided that:

(A) The additive products contain all of the same detergent-active components and no detergent-active components other than those contained in common; and

(B) The minimum concentration recommended for the use of each such additive product is specified such that, when each additive product is mixed in gasoline at the recommended concentration, each of its detergent-active components will be present at a final concentration no less than the lowest concentration for that component shown to be effective by the data available for the tested additive product.

(d) The rate at which a detergent blender treats gasoline with a detergent additive package must be no less than the minimum recommended concentration reported for the subject detergent additive pursuant to paragraph (c)(3) of this section, except under the following conditions:

(1) If a detergent blender believes that the minimum treat rate recommended by the manufacturer of a detergent additive exceeds the amount of detergent actually required for effective deposit control, and possesses substantiating data consistent with the guidelines in paragraph (e) of this section, then, upon informing EPA in writing of these circumstances, the detergent blender may use the detergent at a lower concentration.

(2) The notification to EPA must clearly specify the name of the detergent product and its manufacturer, the concentration recommended by the detergent manufacturer, and the lower concentration which the detergent

blender intends to use. The notification must also attest that data are available to substantiate the deposit control effectiveness of the detergent at the intended lower concentration. The notification must be sent by certified mail to the address specified in § 80.174(b).

(3) At its discretion, EPA may require that the detergent blender submit the test data purported to substantiate the claimed effectiveness of the lower concentration of the detergent additive. EPA may also require the manufacturer of the subject detergent additive to submit test data substantiating the minimum recommended concentration specified in the detergent additive registration. In either case, EPA will send a letter to the appropriate party, and the supporting data will be due to EPA within 30 days of receipt of EPA's letter.

(i) If the detergent blender fails to submit the required supporting data to EPA in the allotted time period, or if EPA judges the submitted data to be inadequate to support the detergent blender's claim that the lower concentration provides a level of deposit control consistent with the requirements of this section, then EPA will disapprove the use of the detergent at the lower concentration. Further, the detergent blender may be subject to applicable liabilities and penalties pursuant to §§ 80.156 and 80.159 for any gasoline or PRC it has additized at the lower concentration.

(ii) If the detergent manufacturer fails to submit the required test data to EPA within the allotted time period, EPA will proceed on the assumption that data are not available to substantiate the minimum recommended concentration specified in the detergent registration, and the subject additive may be disqualified for use in complying with the requirements of this subpart, pursuant to the procedures in paragraph (g) of this section. The detergent manufacturer may also be subject to applicable liabilities and penalties pursuant to §§ 80.156 and 80.159.

(iii) If both parties submit the required information, EPA will evaluate the quality and results of both sets of test data in relation to each other and to industry-consensus test practices and standards, in a manner consistent with the guidelines described in paragraph (e) of this section. EPA will approve or disapprove the use of the detergent at the lower concentration, and will inform both the detergent blender and the detergent manufacturer of the results of its analysis within 60 days of receipt of both sets of data.

(e) *Demonstration of deposit control efficiency*. At its discretion, EPA may require a detergent additive registrant to provide test data to support the deposit control effectiveness of a detergent at the minimum concentration recommended, pursuant to paragraph (c)(3) of this section and § 79.21(d) of this chapter. The required supporting data must be submitted to EPA within 30 days of receipt of EPA's request. EPA will notify the submitter, within 60 days after receiving the supporting data, whether the data is adequate to support the deposit control efficiency claimed. Subject to the procedures specified in paragraph (g) of this section, if the supporting data are not submitted or if EPA finds the data insufficient, the detergent may be disqualified for use by fuel manufacturers in complying with the requirements of this subpart. EPA will use the following guidelines in determining the adequacy of the supporting data:

(1) *CARB-based supporting test data*. For detergent additives which are certified by the California Air Resources Board (CARB) for use in the State of California (pursuant to Title 13, section 2257 of the California Code of Regulations), the CARB certification data constitutes adequate support of the detergent's effectiveness under this section, with the exception that CARB detergent certification data specific to California Phase II reformulated gasoline (pursuant to Title 13, Chapter 5, Article 1, Subarticle 2, California Code of Regulations, Standards for Gasoline Sold Beginning March 1, 1996) will not be considered adequate support for detergent effectiveness in gasolines that do not conform to the compositional specifications for California's Phase II reformulated gasoline. For CARB-based supporting data to be used to demonstrate detergent performance, the minimum recommended concentration reported in the detergent additive registration must be no less than the

concentration of the detergent-active components reported in the subject CARB detergent certification.

(2) EPA will evaluate the adequacy of other supporting data according to the following guidelines:

(i) Test fuel guidelines.

(A) The gasoline used in the supporting tests must contain the detergent-active components of the subject detergent additive package in an amount which corresponds to the minimum recommended concentrations recorded in the respective detergent registration, or less than this amount.

(B) The test fuels must not contain any detergent-active components other than those recorded in the subject detergent registration.

(C) The test fuels used must be reasonably typical of in-use fuels in their tendency to form deposits. Test fuel taken directly from commercial refinery production stock is acceptable. Specially refined low-deposit-forming fuels such as indolene are not acceptable. Other specially blended test fuels will be evaluated by EPA for acceptability based on the extent to which such fuels adequately represent the deposit-forming tendency of typical (average) in-use fuels, as reflected in the levels of the following fuel parameters: sulfur content, aromatic content, olefin content, T–90, and oxygenate content.

(D) The composition of the blended test fuel(s) used in carburetor deposit control testing, conducted to support the claimed effectiveness of detergents used in leaded gasoline, should be reasonably typical of in-use gasoline in its tendency to form carburetor deposits (or more severe than typical in-use fuels) as defined by the olefin and sulfur content. Test data using leaded fuels is preferred for this purpose, but data collected using unleaded fuels may also be acceptable provided that some correlation with additive performance in leaded fuels is available.

(ii) Test procedure guidelines.

(A) To be acceptable, test data submitted to support the deposit control effectiveness of a detergent additive must derive from testing conducted in conformity with good engineering practices.

(B) For demonstration of fuel injector and intake valve deposit control performance, the tests specified in §§ 80.165, or other vehicle-based tests using generally accepted industry procedures and standards, are preferred. Engine-based tests may also be acceptable, assuming a reasonable correlation with vehicle-based tests and standards can be demonstrated. Bench test data may be acceptable to demonstrate fuel injector deposit control performance, assuming the results can be correlated with vehicle- or engine-based tests and standards. Bench testing will not be considered acceptable for demonstration of IVD control performance. Examples of acceptable test procedures are contained in the following references:

(*1*) Intake Valve Deposit Test Procedures:

(*i*) ''Intake Valve Deposits—Fuel Detergency Requirements Revisited'', Bill Bitting et al., Society of Automotive Engineers, SAE Technical Paper No. 872117, 1987.[1]

(*ii*) ''BMW—10,000 Miles Intake Valve Test Procedure'', March 1, 1991, Section 2257, Title 13, California Code of Regulations.

(*iii*)

(*iv*) ''Effect on Intake Valve Deposits of Ethanol and Additives Common to the Available Ethanol Supply'', Clifford Shilbolm et al., SAE Technical Paper Series No. 902109, 1990.

(*2*) Fuel Injector Deposit Test Procedures:

(*i*) ''Test Method for Evaluating Port Fuel Injector (PFI) Deposits in Vehicle Engines'', March 1, 1991, Section 2257, Title 13, California Code of Regulations.

(*ii*) ''A Vehicle Test Technique for Studying Port Fuel Injector Deposits—A Coordinating Research Council Program'', Robert Tupa et al., SAE Technical paper No. 890213, 1989.

(*iii*) ''The Effects of Fuel Composition and Additives on Multiport Fuel Injector Deposits'', Jack Benson et al., SAE Technical Paper Series No. 861533, 1986.

(*iv*) ''Injector Deposits—The Tip of Intake System Deposit Problems'',

[1] Society of Automotive Engineers (SAE), 400 Commonwealth Drive, Warrendale, PA 15096–0001.

[2] [Reserved]

Brian Taneguchi, et al., SAE Technical Paper Series No. 861534, 1986.

(C) For demonstration of carburetor deposit control performance, any generally accepted vehicle, engine, or bench test procedure for carburetor deposit control will be considered adequate. Port and throttle body fuel injector deposit control test data will also be considered to be adequate demonstration of an additive's ability to control carburetor deposits. Examples of acceptable test procedures for demonstration of carburetor deposit control, in addition to the fuel injector test procedures listed above in paragraph (e)(2)(ii)(B)(*2*) of this section, are contained in the following references:

(*1*) ''Fuel Injector, Intake Valve, and Carburetor Detergency Performance of Gasoline Additives'', C.H. Jewitt et al., SAE Technical Paper No. 872114, 1987.

(*2*) ''Carburetor Cleanliness Test Procedure, State-of-the-Art Summary, Report: 1973–1981'', Coordinating Research Council, CRC Report No. 529.[3]

(f) *Detergent identification test procedure.* (1) At its discretion, EPA may require the additive registrant to submit an analytical procedure capable of identifying the detergent additive in its pure state. The test procedure will be due to EPA within 30 days of the registrant's receipt of the request. Subject to the provisions in paragraph (g) of this section, if the registrant fails to submit an analytical procedure, or if EPA judges a submitted procedure to be inadequate, EPA may deny or withdraw the detergent's eligibility to be used to satisfy the detergency requirements in this section.

(2) The analytical procedure submitted by the registrant must be able to both qualitatively and quantitatively identify each component of the detergent additive package. To be acceptable, the procedure must provide results that conform to reasonable and customary standards of repeatability and reproducibility, and reasonable and customary limits of detection and accuracy, for the type of test in question.

(3) A fourier transform infrared spectroscopy (FTIR)-based procedure, including an actual infrared spectrum of the detergent additive package and each component part of the detergent package obtained from this test method, is preferred.

(g) *Disqualification of a detergent additive package.* (1) When EPA makes a preliminary determination that a detergent additive registrant has failed to comply with the requirements of paragraph (c), (d)(3)(ii), (e), or (f) of this section, either by failing to submit required information for a subject detergent additive or by submitting information which EPA deems inadequate, EPA shall notify the additive registrant by certified mail, return receipt requested, setting forth the basis for that determination and informing the registrant that the detergent may lose its eligibility to be used to comply with the detergency requirements of this section.

(2) If EPA determines that the detergent registration was created by fraud or other misconduct, such as a negligent disregard for the truthfulness or accuracy of the required information or of the application, the detergent registration will be considered void *ab initio* and the revocation of qualification will be retroactive to January 1, 1995 or the date on which the additive product was first registered, whichever is later.

(3) The registrant will be afforded 60 days from the date of receipt of the notice of intent of detergent disqualification to submit written comments concerning the notice, and to demonstrate or achieve compliance with the specific data requirements which provide the basis for the proposed disqualification. If the registrant does not respond in writing within 60 days from the date of receipt of the notice of intent of disqualification, the detergent disqualification shall become final by operation of law and the Administrator shall notify the registrant of such disqualification. If the registrant responds in writing within 60 days from the date of receipt of the notice of intent to disqualify, the Administrator shall review and consider all comments submitted by the registrant before taking final

[3] Coordinating Research Council Inc. (CRC), 219 perimeter Center Parking, Atlanta, Georgia, 30346.

action concerning the proposed disqualification. All correspondence regarding a disqualification must be sent to the address specified in § 80.174(b).

(4) As part of a written response to a notice of intent to disqualify, a registrant may request an informal hearing concerning the notice. Any such request shall state with specificity the information the registrant wishes to present at such a hearing. If an informal hearing is requested, EPA shall schedule such a hearing within 90 days from the date of receipt of the request. If an informal hearing is held, the subject matter of the hearing shall be confined solely to whether or not the registrant has complied with the specific data requirements which provide the basis for the proposed disqualification. If an informal hearing is held, the designated presiding officer may be any EPA employee, the hearing procedures shall be informal, and the hearing shall not be subject to or governed by 40 CFR part 22 or by 5 U.S.C. 554, 556, or 557. A verbatim transcript of each informal hearing shall be kept and the Administrator shall consider all relevant evidence and arguments presented at the hearing in making a final decision concerning a proposed cancellation.

(5) If a registrant who has received a notice of intent to disqualify submits a timely written response, and the Administrator decides after reviewing the response and the transcript of any informal hearing to disqualify the detergent for use in complying with the requirements of this subpart, the Administrator shall issue a final disqualification order, forward a copy of the disqualification order to the registrant by certified mail, and promptly publish the disqualification order in the FEDERAL REGISTER. Any disqualification order issued after receipt of a timely written response by the registrant shall become legally effective five days after it is published in the FEDERAL REGISTER.

(6) Upon making a final decision to disqualify a detergent additive package pursuant to this paragraph (g), EPA shall inform all fuel manufacturers and secondary additive manufacturers whose product registrations report the potential use of the disqualified detergent that such detergent is no longer eligible for compliance with the requirements of this subpart. Such fuel manufacturers and secondary additive manufacturers shall have 45 days in which to stop using the ineligible detergent additive package and substitute an eligible detergent additive. When applicable, EPA shall also notify such parties that the detergent registration had been created by fraud or other misconduct, pursuant to paragraph (g)(2) of this section.

[59 FR 54706, Nov. 1, 1994, as amended at 61 FR 35356, July 5, 1996; 61 FR 58747, Nov. 18, 1996]

§§ 80.142–80.154 [Reserved]

§ 80.155 Interim detergent program controls and prohibitions.

(a)(1) No person shall sell, offer for sale, dispense, supply, offer for supply, transport, or cause the transportation of gasoline to the ultimate consumer for use in motor vehicles or in any off-road engines (except as provided in § 80.160), or to a gasoline retailer or wholesale purchaser-consumer, and no person shall detergent-additize gasoline, unless such gasoline is additized in conformity with the requirements of § 80.141. No person shall cause the presence of any gasoline in the gasoline distribution system unless such gasoline is additized in conformity with the requirements of § 80.141.

(2) Gasoline has been additized in conformity with the requirements of § 80.141 when the detergent component satisfies the requirements of § 80.141 and when:

(i) The gasoline has been additized in conformity with the detergent composition and purpose-in-use specifications of an applicable detergent registered under 40 CFR part 79, and in accordance with at least the minimum concentration specifications of that detergent as registered under 40 CFR part 79 or as otherwise provided under § 80.141(d); or

(ii) The gasoline is composed of two or more commingled gasolines and each component gasoline has been additized in conformity with the detergent composition and purpose-in-use specifications of a detergent registered

under 40 CFR part 79, and in accordance with at least the minimum concentration specifications of that detergent as registered under 40 CFR part 79 or as otherwise provided under § 80.141(d); or

(iii) The gasoline is composed of a gasoline commingled with a post-refinery component (PRC), and both of these components have been additized in conformity with the detergent composition and use specifications of a detergent registered under 40 CFR part 79, and in accordance with at least the minimum concentration specifications of that detergent as registered under 40 CFR part 79 or as otherwise provided under § 80.141(d).

(b) No person shall blend detergent into gasoline or PRC unless such person complies with the volumetric additive reconciliation requirements of § 80.157.

(c) No person shall sell, offer for sale, dispense, supply, offer for supply, store, transport, or cause the transportation of any gasoline, detergent, or detergent-additized PRC unless the product transfer document for the gasoline, detergent or detergent-additized PRC complies with the requirements of § 80.158.

(d) No person shall refine, import, manufacture, sell, offer for sale, dispense, supply, offer for supply, store, transport, or cause the transportation of any detergent that is to be used as a component of detergent-additized gasoline or detergent-additized PRC, unless such detergent conforms with the composition specifications of a detergent registered under 40 CFR part 79 and the detergent otherwise complies with the requirements of § 80.141. No person shall cause the presence of any detergent in the detergent, PRC, or gasoline distribution systems unless such detergent complies with the requirements of § 80.141.

(e)(1) No person shall sell, offer for sale, dispense, supply, offer for supply, transport, or cause the transportation of detergent-additized PRC, unless the PRC has been additized in conformity with the requirements of § 80.141. No person shall cause the presence in the PRC or gasoline distribution systems of any detergent-additized PRC that fails to conform to the requirements of § 80.141.

(2) PRC has been additized in conformity with the requirements of § 80.141 when the detergent component satisfies the requirements of § 80.141 and:

(i) The PRC has been additized in accordance with the detergent composition and use specifications of a detergent registered under 40 CFR part 79, and in accordance with at least the minimum concentration specifications of that detergent as registered under 40 CFR part 79 or as otherwise provided under § 80.141(d); or

(ii) The PRC is composed of two or more commingled PRCs, and each component has been additized in accordance with the detergent composition and use specifications of a detergent registered under 49 CFR part 79, and in accordance with at least the minimum concentration specifications of that detergent as registered under 40 CFR part 79 or as otherwise provided under § 80.141(d).

[61 FR 35358, July 5, 1996]

§ 80.156 Liability for violations of the interim detergent program controls and prohibitions.

(a) *Persons liable*—(1) *Gasoline nonconformity*. Where gasoline contained in any storage tank at any facility owned, leased, operated, controlled or supervised by any gasoline refiner, importer, carrier, distributor, reseller, retailer, wholesale purchaser-consumer, oxygenate blender, or detergent blender, is found in violation of any of the prohibitions specified in § 80.155(a), the following persons shall be deemed in violation:

(i) Each gasoline refiner, importer, carrier, distributor, reseller, retailer, wholesale purchaser-consumer, oxygenate blender, or detergent blender, who owns, leases, operates, controls or supervises the facility (including, but not limited to, a truck or individual storage tank) where the violation is found;

(ii) Each gasoline refiner, importer, distributor, reseller, retailer, wholesale purchaser-consumer, oxygenate blender, detergent manufacturer, distributor, or blender, who refined, imported, manufactured, sold, offered for sale, dispensed, supplied, offered for

supply, stored, detergent additized, transported, or caused the transportation of the detergent-additized gasoline (or the base gasoline component, the detergent component, or the detergent-additized post-refinery component of the gasoline) that is in violation, and each such party that caused the gasoline that is in violation to be present in the gasoline distribution system; and

(iii) Each gasoline carrier who dispensed, supplied, stored, or transported any gasoline in the storage tank containing gasoline found to be in violation, and each detergent carrier who dispensed, supplied, stored, or transported the detergent component of any post-refinery component or gasoline in the storage tank containing gasoline found to be in violation, provided that the EPA demonstrates, by reasonably specific showings by direct or circumstantial evidence, that the gasoline or detergent carrier caused the violation.

(2) *Post-refinery component non-conformity*. Where detergent-additized PRC contained in any storage tank at any facility owned, leased, operated, controlled or supervised by any gasoline refiner, importer, carrier, distributor, reseller, retailer, wholesale purchaser-consumer, oxygenate blender, detergent manufacturer, carrier, distributor, or blender, is found in violation of the prohibitions specified in § 80.155(e), the following persons shall be deemed in violation:

(i) Each gasoline refiner, importer, carrier, distributor, reseller, retailer, wholesale-purchaser consumer, oxygenate blender, detergent manufacturer, carrier, distributor, or blender, who owns, leases, operates, controls or supervises the facility (including, but not limited to, a truck or individual storage tank) where the violation is found;

(ii) Each gasoline refiner, importer, distributor, reseller, retailer, wholesale-purchaser consumer, oxygenate blender, detergent manufacturer, distributor, or blender, who sold, offered for sale, dispensed, supplied, offered for supply, stored, detergent additized, transported, or caused the transportation of the detergent-additized PRC (or the detergent component of the PRC) that is in violation, and each such party that caused the PRC that is in violation to be present in the PRC or gasoline distribution systems; and

(iii) Each carrier who dispensed, supplied, stored, or transported any detergent-additized post-refinery component in the storage tank containing post-refinery component in violation, and each detergent carrier who dispensed, supplied, stored, or transported the detergent component of any detergent-additized post-refinery component which is in the storage tank containing detergent-additized post-refinery component found to be in violation, provided that the EPA demonstrates by reasonably specific showings by direct or circumstantial evidence, that the gasoline or detergent carrier caused the violation.

(3) *Detergent non-conformity*. Where the detergent (prior to additization) contained in any storage tank or container found at any facility owned, leased, operated, controlled or supervised by any gasoline refiner, importer, carrier, distributor, reseller, retailer, wholesale purchaser-consumer, oxygenate blender, detergent manufacturer, carrier, distributor, or blender, is found in violation of the prohibitions specified in § 80.155(d), the following persons shall be deemed in violation:

(i) Each gasoline refiner, importer, carrier, distributor, reseller, retailer, wholesale-purchaser consumer, oxygenate blender, detergent manufacturer, carrier, distributor, or blender, who owns, leases, operates, controls or supervises the facility (including, but not limited to, a truck or individual storage tank) where the violation is found;

(ii) Each gasoline refiner, importer, distributor, reseller, retailer, wholesale purchaser-consumer, oxygenate blender, detergent manufacturer, distributor, or blender, who sold, offered for sale, dispensed, supplied, offered for supply, stored, transported, or caused the transportation of the detergent that is in violation, and each such party that caused the detergent that is in violation to be present in the detergent, gasoline, or PRC distribution systems; and

(iii) Each gasoline or detergent carrier who dispensed, supplied, stored, or transported any detergent which is in

the storage tank or container containing detergent found to be in violation, providing that EPA demonstrates, by reasonably specific showings by direct or circumstantial evidence, that the gasoline or detergent carrier caused the violation.

(4) *Volumetric additive reconciliation.* Where a violation of the volumetric additive reconciliation requirements established by § 80.155(b) has occurred, the following persons shall be deemed in violation:

(i) Each detergent blender who owns, leases, operates, controls or supervises the facility (including, but not limited to, a truck or individual storage tank) where the violation has occurred; and

(ii) Each gasoline refiner, importer, carrier, distributor, reseller, retailer, wholesale purchaser-consumer, or oxygenate blender, and each detergent manufacturer, carrier, distributor, or blender, who refined, imported, manufactured, sold, offered for sale, dispensed, supplied, offered for supply, stored, transported, or caused the transportation of the detergent-additized gasoline, the base gasoline component, the detergent component, or the detergent-additized post-refinery component, of the gasoline that is in violation, provided that the EPA demonstrates, by reasonably specific showings by direct or circumstantial evidence, that such person caused the violation.

(5) *Product transfer document.* Where a violation of § 80.155(c) is found at a facility owned, leased, operated, controlled, or supervised by any gasoline refiner, importer, carrier, distributor, reseller, retailer, wholesale purchaser-consumer, oxygenate blender, detergent manufacturer, carrier, distributor, or blender, the following persons shall be deemed in violation: each gasoline refiner, importer, carrier, distributor, reseller, retailer, wholesale-purchaser consumer, oxygenate blender, detergent manufacturer, carrier, distributor, or blender, who owns, leases, operates, control or supervises the facility (including, but not limited to, a truck or individual storage tank) where the violation is found.

(b) *Branded refiner vicarious liability.* Where any violation of the prohibitions specified in § 80.155 has occurred, with the exception of violations of § 80.155(c), a refiner will also be deemed liable for violations occurring at a facility operating under such refiner's corporate, trade, or brand name or that of any of its marketing subsidiaries. For purposes of this section, the word facility includes, but is not limited to, a truck or individual storage tank.

(c) *Defenses.* (1) In any case in which a gasoline refiner, importer, distributor, carrier, reseller, retailer, wholesale-purchaser consumer, oxygenate blender, detergent distributor, carrier, or blender, is in violation of any of the prohibitions of § 80.155, pursuant to paragraphs (a) or (b) of this section as applicable, the regulated party shall be deemed not in violation if it can demonstrate:

(i) That the violation was not caused by the regulated party or its employee or agent (unless otherwise provided in this paragraph (c));

(ii) That product transfer documents account for the gasoline, detergent, or detergent-additized post-refinery component in violation and indicate that the gasoline, detergent, or detergent-additized post-refinery component satisfied relevant requirements when it left their control; and

(iii) That the party has fulfilled the requirements of paragraphs (c) (2) or (3) of this section, as applicable.

(2) *Branded refiner.* (i) Where a branded refiner, pursuant to paragraph (b) of this section, is in violation of any of the prohibitions of § 80.155 as a result of violations occurring at a facility (including, but not limited to, a truck or individual storage tank) which is operating under the corporate, trade or brand name of a refiner or that of any of its marketing subsidiaries, the refiner shall be deemed not in violation if it can demonstrate, in addition to the defense requirements stated in paragraph (c)(1) of this section, that the violation was caused by:

(A) An act in violation of law (other than these regulations), or an act of sabotage or vandalism, whether or not such acts are violations of law in the jurisdiction where the violation of the prohibitions of § 80.155 occurred; or

(B) The action of any gasoline refiner, importer, reseller, distributor,

oxygenate blender, detergent manufacturer, distributor, blender, or retailer or wholesale purchaser-consumer supplied by any of these persons, in violation of a contractual undertaking imposed by the refiner designed to prevent such action, and despite the implementation of an oversight program, including, but not limited to, periodic review of product transfer documents by the refiner to ensure compliance with such contractual obligation; or

(C) The action of any gasoline or detergent carrier, or other gasoline or detergent distributor not subject to a contract with the refiner but engaged by the refiner for transportation of gasoline, post-refinery component, or detergent, to a gasoline or detergent distributor, oxygenate blender, detergent blender, gasoline retailer or wholesale purchaser consumer, despite specification or inspection of procedures or equipment by the refiner which are reasonably calculated to prevent such action.

(ii) In this paragraph (c)(2), to show that the violation ''was caused'' by any of the specified actions, the party must demonstrate by reasonably specific showings, by direct or circumstantial evidence, that the violation was caused or must have been caused by another.

(3) *Detergent blender*. In any case in which a detergent blender is liable for violating any of the prohibitions of § 80.155, the detergent blender shall not be deemed in violation if it can demonstrate, in addition to the defense requirements stated in paragraph (c)(1) of this section, the following:

(i) That it obtained or supplied, as appropriate, prior to the detergent blending, accurate written instructions from the detergent manufacturer or other party with knowledge of such instructions, specifying the detergent's minimum recommended concentration (lowest additive concentration) pursuant to § 80.141(c)(3) and, if applicable, the limitations of this concentration for use in leaded product.

(ii) That it has implemented a quality assurance program that includes, but is not limited to, a periodic review of its supporting product transfer and volume measurement documents to confirm the correctness of its product transfer and volumetric additive reconciliation documents created for all products it additized.

(4) *Detergent manufacturer*—(i) *Presumptive liability affirmative defense*. Notwithstanding the provisions of paragraph (c)(1) of this section, in any case in which a detergent manufacturer is liable for violating any of the prohibitions of § 80.155, the detergent manufacturer shall be deemed not in violation if it can demonstrate each of the following:

(A) Product transfer documents which account for the detergent component of the product in violation and which indicate that such detergent satisfied all relevant requirements when it left the detergent manufacturer's control; and

(B) Written blending instructions which, pursuant to § 80.141(c)(3)(ii), were supplied by the detergent manufacturer to its customer who purchased or obtained from the manufacturer the detergent component of the product determined to be in violation. The written blending instructions must have been supplied by the manufacturer prior to the customer's use or sale of the detergent. The instructions must accurately identify the minimum recommended concentration (lowest additive concentration) specified in the detergent's 40 CFR part 79 registration, and must also accurately identify if the detergent, at that concentration, is only registered as effective for use in leaded gasoline.

(C) If the detergent batch used in the noncomplying product was produced less than one year before the manufacturer was notified by EPA of the possible violation, then the manufacturer must provide FTIR or other test results for the batch of detergent used in the noncomplying product, performed in accordance with the detergent testing procedure submitted by the manufacturer, or available for submission, pursuant to § 80.141(f).

(*1*) The analysis may have been conducted on the subject detergent batch at the time it was manufactured, or may be conducted on a sample of that batch which the manufacturer retained for such purpose at the time the batch was manufactured.

(*2*) The test results must accurately establish that, when it left the manufacturer's control, the detergent component of the product determined to be in violation was in conformity with the chemical composition and concentration specifications reported pursuant to § 80.141(c)(1);

(D) If the detergent batch used in the noncomplying product was produced more than one year prior to the manufacturer's notification by EPA of the possible violation, then the manufacturer must provide either:

(*1*) Test results for the batch in question as specified in the paragraph (c)(4)(i)(C) of this section; or

(*2*) The following materials:

(*i*) Documentation of the measured viscosity, density, and basic nitrogen content of the detergent batch in question, or any other such physical parameters which the manufacturer normally uses to ensure production quality control, which establishes conformity with the manufacturer's quality control standards for such parameters; and

(*ii*) If the detergent registration identifies polymeric component(s) of the detergent package as the product(s) of other chemical reactants, documentation that the reagents used to synthesize the detergent batch in question were the same as those specified in the registration and that they met the manufacturer's normal acceptance criteria for such reagents, reported pursuant to § 80.162(b)(1).

(ii) *Detergent manufacturer causation liability*. In any case in which a detergent manufacturer is liable for a violation of § 80.155, and the manufacturer establishes an affirmative defense to such liability pursuant to paragraph (c)(4)(i) of this section, the detergent manufacturer will nonetheless be deemed liable for the violation of § 80.155 if EPA can demonstrate, by reasonably specific showings by direct or circumstantial evidence, that the detergent manufacturer caused the violation.

(5) *Defense against liability where more than one party may be liable for VAR violations*. In any case in which a party is presumptively or vicariously liable for a violation of § 80.155 due to a failure to meet the VAR requirements § 80.157, except for the VAR record requirements pursuant to § 80.157(g), such party shall not be deemed liable if it can establish the following:

(i) Prior to the violation it had entered into a written contract with another potentially liable detergent blender party (''the assuming party''), under which that other party assumed legal responsibility for fulfilling the VAR requirement that had been violated;

(ii) The contract included reasonable oversight provisions to ensure that the assuming party fulfilled its VAR responsibilities (including, but not limited to, periodic review of VAR records) and the oversight provision was actually implemented by the party raising the defense;

(iii) The assuming party is fiscally sound and able to pay its penalty for the VAR violation; and

(iv) The employees or agents of the party raising the defense did not cause the violation.

(6) *Defense to liability for gasoline nonconformity violations caused solely by the addition of misadditized ethanol or other PRC to the gasoline*. In any case in which a party is presumptively or vicariously liable for a gasoline non-conformity violation of § 80.155(a) caused solely by another party's addition of misadditized ethanol or other PRC to the gasoline, the former party shall not be deemed liable for the violation provided that it can establish that is has fulfilled the requirements of paragraphs (c)(1)(i) and (ii) of this section.

(7) *Detergent tank transitioning defenses*. The commingling of two detergents in the same detergent storage tank will not be deemed to violate or cause violations of any of the provisions of this subpart, provided the following conditions are met:

(i) The commingling must occur during a legitimate detergent transitioning event, *i.e.*, a shift from the use of one detergent to another through the delivery of the new detergent into the same tank that contains the original detergent; and

(ii) If the new detergent is restricted to use in leaded gasoline, then such restriction must be applied to the combined detergents; and

(iii) The commingling event must be documented, either on the VAR formula record or on attached supporting records; and

(iv) Notwithstanding any contrary provisions in § 80.157, a VAR formula record must be created for the combined detergents. The VAR compliance period must begin no later than the time of the commingling event. However, at the blender's option, the compliance period may begin earlier, thus including use of the uncombined original detergent within the same period, provided that the 31-day limitation pursuant to § 80.157(a)(6) is not exceeded; and

(v) The VAR formula record must also satisfy the requirements in one of the following paragraphs (c)(7)(v)(A) through (C) of this section, whichever applies to the commingling event. If neither paragraph (c)(7)(v)(A) nor (B) of this section initially applies, then the blender may drain and subsequently redeliver the original detergent into the tank in restricted amounts, in order to meet the conditions of paragraph (c)(7)(v)(A) or (B) of this section. Otherwise, the blender must comply with paragraph (c)(7)(v)(C) of this section.

(A) If both detergents have the same LAC, and the original detergent accounts for no more than 20 percent of the tank's total delivered volume after addition of the new detergent, then the VAR formula record is required to identify only the use of the new detergent.

(B) If the two detergents have different LACs and the original detergent accounts for 10 percent or less of the tank's total delivered volume after addition of the new detergent, then the VAR formula record is required to identify only the use of the new detergent, and must attain the LAC of the new detergent. If the original detergent's LAC is greater than that of the new detergent, then the compliance period may begin earlier than the date of the commingling event (pursuant to paragraph (c)(7)(iv) of this section) only if the original detergent does not exceed 10 percent of the total detergent used during the compliance period.

(C) If neither of the preceding paragraphs (c)(7)(v)(A) or (B) of this section applies, then the VAR formula record must identify both of the commingled detergents, and must use and attain the higher LAC of the two detergents. Once the commingled detergent has been depleted by an amount equal to the volume of the original detergent in the tank at the time the new detergent was added, subsequent VAR formula records must identify and use the LAC of only the new detergent.

(8) *Defense to liability for noncompliance with leaded-only use restrictions.* A party shall not be deemed liable for violations of § 80.155(a) or (e) caused solely by the additization or use of gasoline or PRC in violation of leaded-only use restrictions, provided that the conditions specified in § 80.169(c)(9) are met.

(d) *Detergent manufacturer causation liability.* In any case in which a detergent manufacturer is liable for a violation of § 80.155 pursuant to paragraph (a) of this section, and the manufacturer establishes affirmative defense to such liability pursuant to paragraph (c) of this section, the detergent manufacturer will be liable for the violation of § 80.155 pursuant to this paragraph (d) of this section, provided that EPA can demonstrate, by reasonably specific showings by direct or circumstantial evidence, that the detergent manufacturer caused the violation.

[59 FR 54706, Nov. 1, 1994, as amended at 61 FR 35358, July 5, 1996]

§ 80.157 Volumetric additive reconciliation ("VAR"), equipment calibration, and recordkeeping requirements.

This section contains requirements for automated detergent blending facilities and hand-blending detergent facilities. All gasolines and all PRC intended for use in gasoline must be additized, unless otherwise noted in supporting VAR records, and must be accounted for in VAR records. The VAR reconciliation standard is attained under this section when the actual concentration of detergent used per VAR formula record equals or exceeds the lowest additive concentration (LAC) specified for that detergent pursuant to § 80.141(c)(3), or, if appropriate, under § 80.141(d). A separate VAR formula record must be created

for leaded gasoline additized with a detergent registered for use only with leaded gasoline, or used at a concentration that is registered as effective for leaded gasoline only. Detergent so used must be accurately and separately measured, either through the use of a separate storage tank, a separate meter, or some other measurement system that is able to accurately distinguish its use. Recorded volumes of gasoline, detergent, and PRC must be expressed to the nearest gallon (or smaller units), except that detergent volumes of five gallons or less must be expressed to the nearest tenth of a gallon (or smaller units). However, if the blender's equipment cannot accurately measure to the nearest tenth of a gallon, then such volumes must be rounded downward to the next lower gallon. PRC included in the reconciliation must be identified. Each VAR formula record must also contain the following information:

(a) *Automated blending facilities.* In the case of an automated detergent blending facility, for each VAR period, for each detergent storage system and each detergent in that storage system, the following must be recorded:

(1) The manufacturer and commercial identifying name of the detergent additive package being reconciled, and the LAC specified in the detergent registration for use with the applicable type of gasoline (i.e., unleaded or leaded). The LAC must be expressed in terms of gallons of detergent per thousand gallons of gasoline or PRC, and expressed to four digits. If the specified LAC is only effective for use with leaded gasoline, the record must so indicate. If the detergent storage system which is the subject of the VAR formula record is a proprietary system under the control of a customer, this fact must be indicated on the record.

(2) The total volume of detergent blended into gasoline and PRC, in accordance with one of the following paragraphs, as applicable.

(i) For a facility which uses in-line meters to measure detergent usage, the total volume of detergent measured, together with supporting data which includes one of the following: the beginning and ending meter readings for each meter being measured, the metered batch volume measurements for each meter being measured, or other comparable metered measurements. The supporting data may be supplied on the VAR formula record or in the form of computer printouts or other comparable VAR supporting documentation.

(ii) For a facility which uses a gauge to measure the inventory of the detergent storage tank, the total volume of detergent shall be calculated from the following equation:

$$\text{Detergent Volume} = (A) - (B) + (C) - (D)$$

where:

A = Initial detergent inventory of the tank
B = Final detergent inventory of the tank
C = Sum of any additions to detergent inventory
D = Sum of any withdrawals from detergent inventory for purposes other than the additization of gasoline or PRC.

The value of each variable in this equation must be separately recorded on the VAR formula record. In addition, a list of each detergent addition included in variable C and a list of each detergent withdrawal included in variable D must be provided, either on the formula record or as VAR supporting documentation.

(3) The total volume of gasoline plus PRC to which detergent has been added, together with supporting data which includes one of the following: The beginning and ending meter measurements for each meter being measured, the metered batch volume measurements for each meter being measured, or other comparable metered measurements. The supporting data may be supplied on the VAR formula record or in the form of computer printouts or other comparable VAR supporting documentation. If gasoline has intentionally been overadditized in anticipation of the later addition of unadditized PRC, then the total volume of gasoline plus PRC recorded must include the expected amount of unadditized PRC to be added later. In addition, the amount of gasoline which was overadditized for this purpose must be specified.

(4) The actual detergent concentration, calculated as the total volume of

detergent added (pursuant to paragraph (a)(2) of this section), divided by the total volume of gasoline plus PRC (pursuant to paragraph (a)(3) of this section). The concentration must be calculated and recorded to four digits.

(5) A list of each detergent concentration rate initially set for the detergent that is the subject of the VAR record, together with the date and description of each adjustment to any initially set concentration. The concentration adjustment information may be supplied on the VAR formula record or in the form of computer printouts or other comparable VAR supporting documentation. No concentration setting is permitted below the applicable LAC, except as may be modified pursuant to § 80.141(d) or as described in paragraph (a)(7) of this section.

(6) The dates of the VAR period, which shall be no longer than thirty-one days. If the VAR period is contemporaneous with a calendar month, then specifying the month will fulfill this requirement; if not, then the beginning and ending dates and times of the VAR period must be listed. The times may be supplied on the VAR formula record or in supporting documentation. Any adjustment to any detergent concentration rate more than 10 percent over the concentration rate initially set in the VAR period shall terminate that VAR period and initiate a new VAR period, except as provided in paragraph (a)(7) of this section.

(7) The concentration setting for a detergent injector may be set below the applicable LAC, or it may be adjusted more than 10 percent above the concentration initially set in the VAR period without terminating that VAR period, provided that:

(i) The purpose of the change is to correct a batch misadditization prior to the end of the VAR period and prior to the transfer of the batch to another party, or to correct an equipment malfunction; and

(ii) The concentration is immediately returned after the correction to a concentration that fulfills the requirements of paragraphs (a)(5) and (6) of this section; and

(iii) The blender creates and maintains documentation establishing the date and adjustments of the correction; and

(iv) If the correction is initiated only to rectify an equipment malfunction, and the amount of detergent used in this procedure is not added to gasoline in the compliance period, then this amount is subtracted from the detergent volume listed on the VAR formula record.

(8) If unadditized gasoline has been transferred from the facility, other than bulk transfers from refineries or pipelines to non-retail outlets or non-WPC facilities, the total amount of such gasoline must be specified.

(b) *Non-automated facilities.* In the case of a facility in which hand blending or any other non-automated method is used to blend detergent, for each detergent and for each batch of gasoline and each batch of PRC to which the detergent is being added, the following shall be recorded:

(1) The manufacturer and commercial identifying name of the detergent additive package being reconciled, and the LAC specified in the detergent registration for use with the applicable type of gasoline (i.e., unleaded or leaded). The LAC must be expressed in terms of gallons of detergent per thousand gallons of gasoline or PRC, and expressed to four digits. If the specified LAC is only effective for use with leaded gasoline, the record must so indicate.

(2) The date of the additization that is the subject of the VAR formula record.

(3) The volume of added detergent.

(4) The volume of the gasoline and/or PRC to which the detergent has been added. If gasoline has intentionally been overadditized in anticipation of the later addition of unadditized PRC, then the total volume of gasoline plus PRC recorded must include the expected amount of unadditized PRC to be added later. In addition, the amount of gasoline which was overadditized for this purpose must be specified.

(5) The brand (if known), grade, and leaded/unleaded status of gasoline, and/or the type of PRC.

(6) The actual detergent concentration, calculated as the volume of added detergent (pursuant to paragraph (b)(3) of this section), divided by the volume

of gasoline and/or PRC (pursuant to paragraph (b)(4) of this section). The concentration must be calculated and recorded to four digits.

(c) Every VAR formula record created pursuant to paragraphs (a) and (b) of this section shall contain the following:

(1) The signature of the creator of the VAR record;

(2) The date of the creation of the VAR record; and

(3) A certification of correctness by the creator of the VAR record.

(d) *Electronically-generated VAR formula and supporting records.* (1) Electronically-generated records are acceptable for VAR formula records and supporting documentation (including PTDs), provided that they are complete, accessible, and easily readable. VAR formula records must also be stored with access and audit security, which must restrict to a limited number of specified people those who have the ability to alter or delete the records. In addition, parties maintaining records electronically must make available for EPA use the hardware and software necessary to review the records.

(2) Electronically-generated VAR formula records may use an electronic user identification code to satisfy the signature requirements of paragraph (c)(1) of this section, provided that:

(i) The use of the ID is limited to the record creator; and

(ii) A paper record is maintained, which is signed and dated by the VAR formula record creator, acknowledging that the use of that particular user ID on a VAR formula record is equivalent to his/her signature on the document.

(e) Automated detergent blenders must calibrate their detergent equipment once in each calendar half year, with the acceptable calibrations being no less than one hundred twenty days apart. Equipment recalibration is also required each time the detergent package is changed, unless written documentation indicates that the new detergent package has the same viscosity as the previous detergent package. Detergent package change calibrations may be used to satisfy the semiannual requirement provided that the calibrations occur in the appropriate half calendar year and are no less than one hundred twenty days apart.

(f) The following VAR supporting documentation must also be created and maintained:

(1) For all automated detergent blending facilities, documentation reflecting performance of the calibrations required by paragraph (e) of this section, and any associated adjustments of the automated detergent equipment;

(2) For all hand-blending facilities which are terminals, a record specifying, for each calendar month, the total volume in gallons of transfers from the facility of unadditized base gasoline;

(3) For all detergent blending facilities, product transfer documents for all gasoline, detergent and detergent-additized PRC transferred into or out of the facility; in addition, bills of lading, transfer, or sale for all unadditized PRC transferred into the facility;

(4) For all automated detergent blending facilities, documentation establishing the brands (if known) and grades of the gasoline which is the subject of the VAR formula record;

(5) For all hand blending detergent blenders, the documentation, if in the party's possession, supporting the volumes of gasoline, PRC, and detergent reported on the VAR formula record; and

(6) For all detergent blending facilities, documentation establishing the curing of a batch or amount of misadditized gasoline or PRC, or the curing of a use restriction on the additized gasoline or PRC, and providing at least the following information: the date of the curing procedure; the problem that was corrected; the amount, name, and LAC of the original detergent used; the amount, name, and LAC of the added curing detergent; and the actual detergent concentration attained in, and the volume of, the total cured product.

(g) *Document retention and availability.* All detergent blenders shall retain the documents required under this section for a period of five years from the date the VAR formula records and supporting documentation were created, and shall deliver them upon request to the EPA Administrator or the

Administrator's authorized representative.

(1) Except as provided in paragraph (g)(3) of this section, automated detergent blender facilities and hand-blender facilities which are terminals, which physically blend detergent into gasoline, must make immediately available to EPA, upon request, the preceding twelve months of VAR formula records plus the preceding two months of VAR supporting documentation.

(2) Except as provided in paragraph (g)(3) of this section, other hand-blending detergent facilities which physically blend detergent into gasoline must make immediately available to EPA, upon request, the preceding two months of VAR formula records and VAR supporting documentation.

(3) Facilities which have centrally maintained records at other locations, or have customers who maintain their own records at other locations for their proprietary detergent systems, and which can document this fact to the Agency, may have until the start of the next business day after the request to supply VAR supporting documentation, or longer if approved by the Agency.

(4) In this paragraph (g) of this section, the term immediately available means that the records must be provided, electronically or otherwise, within approximately one hour of EPA's request, or within a longer time frame as approved by EPA.

[59 FR 54706, Nov. 1, 1994, as amended at 61 FR 35360, July 5, 1996]

§ 80.158 Product transfer documents (PTDs).

(a) *Contents.* For each occasion when any gasoline refiner, importer, reseller, distributor, carrier, retailer, wholesale purchaser-consumer, oxygenate blender, detergent manufacturer, distributor, carrier, or blender, transfers custody or title to any gasoline, detergent, or detergent-additized PRC other than when detergent-additized gasoline is sold or dispensed at a retail outlet or wholesale purchaser-consumer facility to the ultimate consumer, the transferor shall provide to the transferee, and the transferee shall acquire from the transferor, documents which accurately include the following information:

(1) The names and addresses of the transferee and transferor; the address requirement may be fulfilled, in the alternative, through separate documentation which establishes said addresses and is maintained by the parties and made available to EPA for the same length of time as required for the PTDs, provided that the normal business procedure of these parties is not to identify addresses on PTDs.

(2) The date of the transfer.

(3) The volume of product transferred.

(4)(i) The identity of the product being transferred (i.e., its identity as base gasoline, detergent, detergent-additized gasoline, or specified detergent-additized oxygenate or detergent-additized gasoline blending stock that comprises a detergent-additized PRC). PTDs for detergent-additized gasoline or PRC are not required to identify the particular detergent used to additize the product.

(ii) If the product being transferred consists of two or more different types of product subject to this regulation, i.e., base gasoline, detergent-additized gasoline, or specified detergent-additized PRC, then the PTD for the commingled product must identify each such type of component contained in the commingled product.

(5) If the product being transferred is base gasoline, then in addition to the base gasoline identification, the following warning must be stated on the PTD: ''Not for sale to the ultimate consumer''. If, pursuant to § 80.160(a), the product being transferred is exempt base gasoline to be used for research, development, or test purposes only, the following warning must also be stated on the PTD: ''For use in research, development, and test programs only.''

(6) The name of the detergent additive as reported in its registration must be used to identify the detergent package on its PTD.

(7) If the product being transferred is leaded gasoline, then the PTD must disclose that the product contains lead and/or phosphorous, as applicable.

(8) If the product being transferred is detergent that is only authorized for the control of carburetor deposits, then

the following must be stated on the detergent's transfer document: ''For use with leaded gasoline only.''

(9) If the product being transferred is detergent-additized gasoline that has been overadditized in anticipation of the later (or earlier) addition of PRC, then the PTD must include a statement that the product has been overadditized to account for a specified volume in gallons, or a specified percentage of the product's total volume, of additional, specified PRC.

(b) Gasoline may not be additized with a detergent authorized only for the control of carburetor deposits and whose product transfer document states ''For use with leaded gasoline only'', and gasoline may not be additized at the lower concentration specified for a detergent authorized at a lower concentration for the control of carburetor deposits only, unless the product transfer document for the gasoline to be additized identifies it as leaded gasoline.

(c) *Use of product codes and other non-regulatory language.* (1) Product codes and other non-regulatory language may not be used as a substitute for the specified PTD warning language specified in paragraph (a)(6) of this section for base gasoline, except that:

(i) The specified warning language may be omitted for bulk transfers of base gasoline from a refinery to a pipeline if there is a prior written agreement between the parties specifying that all such gasoline is unadditized and will not be transferred to the ultimate consumer;

(ii) Product codes may be used as a substitute for the specified warning language provided that the PTD is an electronic data interchange (EDI) document being used solely for the transfer of title to the base gasoline, and provided that the product codes otherwise comply with the requirements of this section.

(2) Product codes and other language not specified in this section may otherwise be used to comply with PTD information requirements, provided that they are clear, accurate, and not misleading.

(3) If product codes are used, they must be standardized throughout the distribution system in which they are used, and downstream parties must be informed of their full meaning.

(d) *PTD exemption for small transfers of additized gasoline.* Transfers of additized gasoline are exempt from the PTD requirements of this section provided all the following conditions are followed:

(1) The product is being transferred by a distributor who is not the product's detergent blender; and

(2) The recipient is a wholesale purchaser-consumer (WPC) or other ultimate consumer of gasoline, for its own use only or for that of its agents or employees; and

(3) The volume of additized gasoline being transferred is not greater than 550 gallons.

(e) *Recordkeeping period.* Any person creating, providing or acquiring product transfer documentation for gasoline, detergent, or detergent-additized PRC, except as provided in paragraph (d) of this section, shall retain the documents required by this section for a period of five years from the date the product transfer documentation was created, received or transferred, as applicable, and shall deliver such documents to EPA upon request. WPCs are not required to retain PTDs of additized gasoline received by them.

[61 FR 35362, July 5, 1996, as amended at 62 FR 60001, Nov. 6, 1997]

§ 80.159 Penalties.

(a) *General.* Any person who violates any prohibition or affirmative requirement of § 80.155 shall be liable to the United States for a civil penalty of not more than the sum of $25,000 for every day of such violation and the amount of economic benefit or savings resulting from the violation.

(b) *Gasoline non-conformity.* Any violation of § 80.155(a) shall constitute a separate day of violation for each and every day the gasoline in violation remains at any place in the gasoline distribution system, beginning on the day that the gasoline is in violation of the respective prohibition and ending on the last day that such gasoline is offered for sale or is dispensed to any ultimate consumer.

(c) *Detergent non-conformity.* Any violation of § 80.155(d) shall constitute a separate day of violation for each and

every day the detergent in violation remains at any place in the gasoline or detergent distribution system, beginning on the day that the detergent is in violation of the prohibition and ending on the last day that detergent-additized gasoline, containing the subject detergent as a component thereof, is offered for sale or is dispensed to any ultimate consumer.

(d) *Post-refinery component non-conformity*. Any violation of § 80.155(e) shall constitute a separate day of violation for each and every day the post-refinery component in violation remains at any place in the post-refinery component or gasoline distribution system, beginning on the day that the post-refinery component is in violation of the respective prohibition and ending on the last day that detergent-additized gasoline containing the post-refinery component is offered for sale or is dispensed to any ultimate consumer.

(e) *Product transfer document non-conformity*. Any violation of § 80.155(c) shall constitute a separate day of violation for every day the product transfer document is not fully in compliance. This is to begin on the day that the product transfer document is created or should have been created and to end at the later of the following dates: Either the day that the document is corrected and comes into compliance, or the day that gasoline not additized in conformity with interim detergent program requirements, as a result of the product transfer document non-conformity, is offered for sale or is dispensed to the ultimate consumer.

(f) *Volumetric additive reconciliation (VAR) record keeping non-conformity*. Any VAR recordkeeping violation of § 80.155(b) shall constitute a separate day of violation for every day that VAR recordkeeping is not fully in compliance. Each element of the VAR record keeping program that is not in compliance shall constitute a separate violation for purposes of this section.

(g) *Volumetric additive reconciliation (VAR) compliance standard non-conformity*. Any violation of the VAR compliance standard established in § 80.157 shall constitute a separate day of violation for each and every day of the VAR compliance period in which the standard was violated.

(h) *Volumetric additive reconciliation (VAR) equipment calibration non-conformity*. Any VAR equipment calibration violation of § 80.155(b) shall constitute a separate day of violation for every day a VAR equipment calibration requirement is not met.

§ 80.160 Exemptions.

(a) *Research, development, and testing exemptions*. Any detergent that is either in a research, development, or test status, or is sold to petroleum, automobile, engine, or component manufacturers for research, development, or test purposes, or any gasoline to be used by, or under the control of, petroleum, additive, automobile, engine, or component manufacturers for research, development, or test purposes, is exempted from the provisions of the interim detergent program, provided that:

(1) The detergent (or fuel containing the detergent), or the gasoline, is kept segregated from non-exempt product, and the party possessing the product maintains documentation identifying the product as research, development, or testing detergent or fuel, as applicable, and stating that it is to be used only for research, development, or testing purposes; and

(2) The detergent (or fuel containing the detergent), or the gasoline, is not sold, dispensed, or transferred, or offered for sale, dispensing, or transfer from a retail outlet. It shall also not be sold, dispensed, or transferred, or offered for sale, dispensing, or transfer from a wholesale purchaser-consumer facility, unless such facility is associated with detergent, fuel, automotive, or engine research, development or testing; and

(3) The party using the product for research, development, or testing purposes, or the party sponsoring this usage, notifies the EPA, on at least an annual basis and prior to the use of the product, of the purpose(s) of the program(s) in which the product will be used and the anticipated volume of the product to be used. The information must be submitted to the address or fax number provided in § 80.174(c).

(b) *Racing fuel and aviation fuel exemptions*. Any fuel that is refined, sold, dispensed, transferred, or offered for

sale, dispensing, or transfer as automotive racing fuel or as aircraft engine fuel, is exempted from the provisions of this subpart, provided that:

(1) The fuel is kept segregated from non-exempt fuel, and the party possessing the fuel for the purposes of refining, selling, dispensing, transferring, or offering for sale, dispensing, or transfer as automotive racing fuel or as aircraft engine fuel, maintains documentation identifying the product as racing fuel, restricted for non-highway use in racing motor vehicles, or as aviation fuel, restricted for use in aircraft, as applicable;

(2) Each pump stand at a regulated party's facility, from which such fuel is dispensed, is labeled with the applicable fuel identification and use restrictions described in paragraph (b)(1) of this section; and

(3) The fuel is not sold, dispensed, transferred, or offered for sale, dispensing, or transfer for highway use in a motor vehicle.

(c) *California gasoline exemptions.* (1) Gasoline or PRC which is additized in the State of California is exempt from the VAR provisions in §§ 80.155(b) and (e) and 80.157, provided that:

(i) For all such gasoline or PRC, whether intended for sale within or outside of California, records of the type required for California gasoline (specified in title 13, California Code of Regulations, section 2257) are maintained; and

(ii) Such records, with the exception of daily additization records, are maintained for a period of five years from the date they were created and are delivered to EPA upon request.

(2) Gasoline or PRC that is transferred and/or sold solely within the State of California is exempt from the PTD provisions of the interim detergent program, specified in §§ 80.155(c) and 80.158.

(3) Nothing in this paragraph (c) exempts such gasoline or PRC from the requirements of § 80.155(a) and (e), as applicable. EPA will base its determination of California gasoline's conformity with the detergent's LAC on the additization records required by CARB, or records of the same type.

[61 FR 35363, July 5, 1996]

§ 80.161 Detergent additive certification program.

(a) *Effective dates and applicability of requirements.* (1) As of July 1, 1997:

(i) Detergent additives for the control of port fuel injector deposits (PFID) and/or intake valve deposits (IVD) in gasoline engines may not be transferred or sold for use in compliance with this subpart unless such additives have been certified according to the requirements of this section.

(ii) Except as provided in § 80.169(c)(8), PFID and IVD control additives may not be added to gasoline or post-refinery component (PRC) for compliance with this subpart unless such additives have been certified according to the requirements of this section.

(iii) Gasoline may not be sold or transferred to a party who sells or transfers gasoline to the ultimate consumer unless such gasoline contains detergent additives which have been certified according to the requirements of this section.

(2) Beginning August 1, 1997, all gasoline sold or transferred to the ultimate consumer must contain detergent additive(s) which have been certified, according to the requirements of this section, to be effective for the control of PFID and IVD in gasoline engines.

(3) Except as specifically exempted in § 80.173, these detergency requirements apply to all gasoline, whether intended for on-highway or nonroad use, including conventional, oxygenated, reformulated, and leaded gasolines, as well as the gasoline component in mixtures of petroleum and alcohol fuels, gasoline used as marine fuel, gasoline service accumulation fuel (as described in § 86.113–94(a)(1) of this chapter), the gasoline component of fuel mixtures of petroleum and methanol used for service accumulation in flexible fuel vehicles (as described in § 86.113–94(d) of this chapter), the gasoline used for factory fill purposes, and all additized PRC.

(4) The specific controls and prohibitions applicable to persons subject to these regulations are set forth in § 80.168.

(b) *Detergent additive certification requirements.* For a detergent additive package to be certified as eligible for use by detergent blenders in complying

with the gasoline detergency requirements of this subpart, the requirements listed in this paragraph (b) must be satisfied for such detergent. Subject to the provisions of paragraph (e) of this section, if the certifier fails to conduct the specified tests or to submit the specified materials, or if EPA judges the testing or materials to be inadequate, or if the detergent fails EPA confirmatory deposit control performance testing pursuant to § 80.167, the Administrator may deny or withdraw the detergent's eligibility to be used to satisfy the detergency requirements of this subpart.

(1) The detergent additive manufacturer must properly register the detergent additive under 40 CFR part 79. For this purpose:

(i) The compositional data required under § 79.21(a) of this chapter shall include the information specified in § 80.162.

(ii) The minimum recommended additive concentration required under § 79.21(d) of this chapter shall be reported to EPA in units of gallons of detergent additive package per 1000 gallons of gasoline or PRC, provided to four digits. This concentration is the lowest additive concentration (LAC) referred to in § 80.170, and shall be reported as follows:

(A) For a detergent additive registered for use in unleaded gasoline, the minimum concentration must be determined and reported for each certification option under which the manufacturer wishes to certify the additive pursuant to § 80.163.

(*1*) In the case of a detergent certified for use in California gasoline based on an existing certification granted by the California Air Resources Board (CARB), pursuant to § 80.163(d), the minimum recommended concentration must equal or exceed the amount specified in the CARB certification.

(*2*) In the case of any other detergent certification option, the minimum recommended concentration must equal or exceed the amount mixed into the associated test fuel specified in § 80.164, which was shown to satisfy the PFID and IVD deposit control performance tests and standards specified in § 80.165.

(B) For a detergent registered for use in leaded gasoline, the minimum recommended concentration must be no less than the amount shown to be needed for control of carburetor deposits, pursuant to the test procedure and test fuel guidelines in § 80.166.

(C) Once it has been registered by EPA, the minimum recommended concentration specified by a detergent manufacturer to detergent blenders and other users of the additive, pursuant to paragraph (c) of this section, may not be changed without first notifying EPA. Such notification should be sent by certified mail to the address specified in § 80.174(b). The change in minimum concentration must be supported by existing certification data or else the notification to EPA must be accompanied by new certification information which demonstrates that the modification is consistent with the requirements of paragraphs (b)(1)(ii)(A) and (B) of this section.

(D) A manufacturer may use a single set of certification test data to demonstrate the deposit control effectiveness of more than one registered detergent additive product, provided that:

(*1*) The additive products contain all of the same detergent-active components and no detergent-active components other than those contained in common; and

(*2*) The minimum concentration recommended for the use of each such additive product is specified such that, when each additive product is mixed in gasoline at the recommended concentration, each of its detergent-active components will be present at a final concentration no less than the lowest concentration of that component which was present when the tested additive product met the PFID and IVD performance standards specified in § 80.165.

(2) The detergent additive manufacturer (or other certifying party) must submit to EPA a sample of the actual detergent additive package which was used in the certification testing specified in § 80.164 or, if such sample is not available, then a sample which has the same composition as the package used in certification testing.

(i) The sample volume shall be between 250 ml and 500 ml.

(ii) The sample shall be packaged in a container which has a resealable closure and which will maintain sample

integrity for at least one year. The container shall be labeled with the name and address of the manufacturer and the name of the detergent additive package.

(iii) Any known shelf life limitations, and any available information on optimal temperature, light exposure, or other conditions to prolong sample shelf life, shall be provided.

(iv) If the certifying party wishes to claim that the sample or any accompanying documents are entitled to special handling for reasons of business confidentiality, the party must clearly identify the sample or documents as such. EPA will handle any samples or documents with such claims according to the regulations at 40 CFR part 2.

(v) The sample shall be submitted to EPA, at the address provided in § 80.174(a), within seven days of the date on which the certification letter for the detergent package is sent to EPA as required by paragraph (b)(3) of this section.

(3) The detergent additive manufacturer (or other certifying party) shall submit a certification letter for the detergent additive package to the address in § 80.174(b). The party must use certified or express mail with return receipt service. The letter shall be signed by a person legally authorized to represent the certifying party and shall contain the following information:

(i) Identifying information.

(A) The name and address of the detergent additive manufacturer.

(B) In any case where the certifier is not the detergent additive manufacturer, such as in the case of a fuel-specific certification pursuant to § 80.163(c), the name and address of the certifier.

(C) The commercial identifying name of the detergent additive product as registered under the requirements of § 79.21 of this chapter.

(ii) A statement attesting that:

(A) The detergent package which is the subject of this certification has been tested according to applicable procedural and test fuel requirements in this subpart and has met the applicable performance standards; and

(B) The testing was conducted in a manner consistent with good engineering practices; and

(C) Complete documentation of the test fuel formulation and IVD demonstration procedures, detergent performance test procedures, and test results are available for EPA's inspection upon request.

(iii) The name and location of the laboratory(ies) at which the certification testing was conducted and the dates during which the testing was conducted.

(iv) For each option under which certification is sought pursuant to § 80.163, specifications of the test fuel(s) in which the detergent underwent performance testing. These fuel specifications must include:

(A) The sulfur content in weight percent.

(B) The T–90 distillation point in degrees Fahrenheit.

(C) The olefin content in volume percent.

(D) The aromatic content in volume percent.

(E) The identity and volume percent of any oxygenate compound.

(F) The source of the test fuel(s) and/or fuel blend stocks used to formulate the test fuel(s).

(v) In the case of a national or PADD certification (pursuant to § 80.163 (a) or (b)) for which the test fuel was specially formulated from refinery blend stocks, the results of the IVD demonstration test, pursuant to § 80.164(b)(3).

(vi) In the case of a fuel-specific detergent certification, pursuant to § 80.163(c), the definition of the segregated gasoline pool, including any permitted PRC, for which the certification is sought, and the fuel parameter percentile distributions determined for the subject gasoline pool, as specified in § 80.164(c). The percentile distributions must include all of the fuel parameters listed in paragraph (b)(3)(iv) (A) through (D) of this section, along with any other fuel parameter(s) which the certifier wishes to use to define the certification fuel. As specified in § 80.164(c)(1)(iv), the procedures used to measure the additional parameters must be identified, as well as the levels of these additional parameters present in the test fuel(s).

(vii) In the case of a certification for California gasoline based on an existing certification granted by CARB, pursuant to § 80.163(d), a copy of the CARB certificate.

(viii) The test concentration(s) of the subject detergent additive in each test fuel, and the corresponding test results (percent flow restriction demonstrated in the PFID test and milligrams of deposit per valve demonstrated in the IVD test).

(ix) For each option under which certification of the detergent is sought, the minimum recommended concentration which the certifying party seeks to establish for the detergent additive package, pursuant to paragraph (b)(1)(ii) of this section.

(4) EPA will acknowledge receipt of the detergent certification letter. The effective date of certification will be the sooner of 60 days from the date on which EPA receives the certification letter, or the certifier's receipt of EPA's acknowledgement of the certification letter. However, neither the passage of 60 days nor EPA's acknowledgement will signify acceptance by EPA of the validity of the information in the certification letter or the adequacy or potency of the detergent sample submitted pursuant to paragraph (b)(2) of this section. EPA may elect at any time to review the detergent certification data, analyze the submitted detergent additive sample, or subject the detergent additive package to confirmatory testing as described in § 80.167 and, where appropriate, may disqualify a detergent certification according to the provisions in paragraph (e) of this section.

(c) The minimum concentration reported in the detergent registration according to the provisions of paragraph (b)(1)(ii) of this section, plus any restrictions in use associated with that concentration, must be accurately communicated in writing by the additive manufacturer to each fuel manufacturer or detergent blender who purchases the subject detergent for purpose of compliance with the gasoline detergency requirements of this subpart, and to any additive manufacturer who purchases the subject additive with the intent of reselling it to a fuel manufacturer for this purpose.

(d) The rate at which a detergent blender treats gasoline with a detergent additive package must be no less than the minimum recommended concentration reported for the subject detergent additive pursuant to paragraph (b)(1)(ii) of this section, except under the following conditions:

(1) If a detergent blender possesses deposit control performance test results as specified in § 80.165 or § 80.166 which show that the minimum treat rate recommended by the manufacturer of a detergent additive product exceeds the amount of that detergent actually required for effective deposit control, then, upon informing EPA in writing of these circumstances, the detergent blender may use the detergent at the lower concentration substantiated by these test results.

(2) The notification to EPA must clearly specify the name of the detergent product and its manufacturer, the concentration recommended by the detergent manufacturer, and the lower concentration which the detergent blender intends to use. The notification must also attest that the required data are available to substantiate the deposit control effectiveness of the detergent at the intended lower concentration. The notification must be sent by certified mail to the address specified in § 80.174(b).

(3) At its discretion, EPA may require that the detergent blender submit the test data purported to substantiate the claimed effectiveness of the lower concentration of the detergent additive. In addition, EPA may require the manufacturer of the subject detergent additive to submit test data substantiating the minimum recommended concentration specified in the detergent additive registration. In either case, EPA will send a letter to the appropriate party; the supporting data will be due to EPA within 30 days of receipt of EPA's letter.

(i) If the detergent blender fails to submit the required supporting data to EPA in the allotted time period, or if EPA judges the submitted data to be inadequate to support the detergent blender's claim that the lower concentration provides a level of deposit control consistent with the requirements of this section, then EPA will

disapprove the use of the detergent at the lower concentration. Further, the detergent blender may be subject to applicable liabilities and penalties pursuant to §§ 80.169 and 80.172 for any gasoline or PRC it has additized at the lower concentration.

(ii) If the detergent manufacturer fails to submit the required test data to EPA within the allotted time period, EPA will proceed on the assumption that data are not available to substantiate the minimum recommended concentration specified in the detergent registration, and the subject additive may be disqualified for use in complying with the requirements of this subpart, pursuant to the procedures in paragraph (e) of this section. The detergent manufacturer may also be subject to applicable liabilities and penalties in §§ 80.169 and 80.172.

(iii) If both parties submit the required information, EPA will evaluate the quality and results of both sets of test data, and will either approve or disapprove the use of the lower treat rate submitted by the detergent blender. EPA will inform both parties of the results of its analysis.

(e) *Disqualification of a detergent additive package.* (1) When EPA makes a preliminary determination that a detergent additive certifier has failed to comply with the detergent certification requirements of this section, including a failure to submit required materials for a detergent additive or submission of materials which EPA deems inadequate, or if a detergent additive fails confirmatory testing conducted pursuant to § 80.167, EPA shall notify the additive certifier by certified mail, return receipt requested, setting forth the basis for that determination and informing the certifier that the detergent may lose its eligibility to be used to comply with the detergency requirements of this section.

(2) If EPA determines that the detergent certification was created by fraud or other misconduct, such as a negligent disregard for the truthfulness or accuracy of the required information, the detergent certification will be considered void *ab initio* and the disqualification will be retroactive to July 1, 1997 or the date on which the additive product was first certified, whichever is later.

(3) The certifier will be afforded 60 days from the date of receipt of the notice of intent of detergent disqualification to submit written comments concerning the notice, and to demonstrate or achieve compliance with the specific requirements which provide the basis for the proposed disqualification. If the certifier does not respond in writing within 60 days from the date of receipt of the notice of intent of disqualification, the detergent disqualification shall become final and the Administrator shall notify the certifier of such final disqualification order. If the certifier responds in writing within 60 days from the date of receipt of the notice of intent to disqualify, the Administrator shall review and consider all comments submitted by the certifier before taking final action concerning the proposed disqualification. All correspondence regarding a disqualification must be sent to the address provided in § 80.174(b).

(4) As part of a written response to a notice of intent to disqualify, a certifier may request an informal hearing concerning the notice. Any such request shall state with specificity the information the certifier wishes to present at such a hearing. If an informal hearing is requested, EPA shall schedule such a hearing within 90 days from the date of receipt of the request. If an informal hearing is held, the subject matter of the hearing shall be confined solely to whether or not the certifier has complied with the specific requirements which provide the basis for the proposed disqualification. If an informal hearing is held, the designated presiding officer may be any EPA employee, the hearing procedures shall be informal, and the hearing shall not be subject to or governed by 40 CFR part 22 or by 5 U.S.C. 554, 556, or 557. A verbatim transcript of each informal hearing shall be kept and the Administrator (or designee) shall consider all relevant evidence and arguments presented at the hearing in making a final decision concerning a proposed disqualification.

(5) If a certifier who has received a notice of intent to disqualify submits a

timely written response, and the Administrator (or designee) decides after reviewing the response and the transcript of any informal hearing to disqualify the detergent for use in complying with the requirements of this subpart, the Administrator (or designee) shall issue a final disqualification order and forward a copy of the disqualification order to the certifier by certified mail. Notice of the disqualification order will also be published in the FEDERAL REGISTER. The disqualification will become effective as of the date on which the copy of the order is received by the certifier. If the certifier is also a blender of the disqualified additive, then the certifier must stop using the ineligible detergent upon receipt of the disqualification order.

(6) Within 10 days of receipt of EPA's notification of the final decision to disqualify a detergent additive package pursuant to this paragraph (e), the detergent certifier must submit to EPA, at the address specified in § 80.174(b), a list of its customers who use the disqualified detergent. Failure to do so may subject the certifier to liabilities for violations of § 80.168 that result from the use of the uncertified detergent. EPA shall inform the certifier's customers by certified mail that the detergent is no longer eligible for compliance with the requirements of this subpart. These parties must stop using the ineligible detergent additive package and substitute an eligible detergent additive within 45 days of receiving the notification, or within 45 days of publication of the disqualification notice in the FEDERAL REGISTER, whichever occurs sooner.

[61 FR 35364, July 5, 1996, as amended at 61 FR 58747, Nov. 18, 1996]

§ 80.162 Additive compositional data.

For a detergent additive product to be eligible for use by detergent blenders in complying with the gasoline detergency requirements of this subpart, the compositional data to be supplied to EPA by the additive manufacturer for the purpose of registering a detergent additive package under § 79.21(a) of this chapter must include the items listed in this section. In the case of items requiring measurement or other technical analysis, and for which a specific test procedure is not stipulated herein, the procedure must conform to reasonable and customary standards of repeatability and reproducibility, and reasonable and customary limits of detection and accuracy for the type of test procedure or analytic procedure in question. At EPA's request, detailed documentation of any such test procedure must be submitted within 10 days of the registrant's receipt of EPA's request.

(a) A complete listing of the components of the detergent additive package and the weight and/or volume percent (as applicable) of each component of the package.

(1) When possible, standard chemical nomenclature shall be used or the chemical structure of the component shall be given. Polymeric components may be reported as the product of other chemical reactants, provided that the supporting data specified in paragraph (b) of this section is also reported.

(2) Each detergent-active component of the package shall be classified into one of the following designations:

(i) Polyalkyl amine;

(ii) Polyether amine;

(iii) Polyalkylsuccinimide;

(iv) Polyalkylaminophenol;

(v) Detergent-active petroleum-based carrier oil;

(vi) Detergent-active synthetic carrier oil; and

(vii) Other detergent-active component (identify category, if feasible.)

(3) Composition variability.

(i) The composition of a detergent additive reported in a single additive registration (and the detergent additive product sold under a single additive registration) may not:

(A) Include detergent-active components which differ in identity from those contained in the detergent additive package at the time of certification testing; or

(B) Include a range of concentration for any detergent-active component such that, if the component were present in the detergent additive package at the lower bound of the reported range, the deposit control effectiveness

of the additive package would be reduced as compared with the level of effectiveness demonstrated during certification testing. Subject to the foregoing constraint, a detergent additive product sold under a particular additive registration may contain a higher concentration of the detergent-active component(s) than the concentration(s) of such component(s) reported in the registration for the additive.

(ii) The identity or concentration of non-detergent-active components of the detergent additive package may vary under a single registration provided that such variability does not reduce the deposit control effectiveness of the additive package as compared with the level of effectiveness demonstrated during certification testing.

(A) Unless the additive manufacturer (or other certifying party) provides EPA with data to substantiate that a carrier oil does not act to enhance the detergent additive package's ability to control deposits, any carrier oil contained in the detergent additive package, whether petroleum-based or synthetic, must be treated as a detergent-active component in accordance with the additive compositional reporting requirements in § 80.162(a)(2). Such data should be sent by certified mail to the address specified in § 80.174(b).

(B) [Reserved]

(iii) Except as provided in paragraph (a)(3)(iv) of this section, detergent additive packages which do not satisfy the restrictions in this paragraph (a)(3) must be separately registered. EPA may disqualify an additive for use in satisfying the requirements of this subpart if EPA determines that the variability included within a given detergent additive registration may reduce the deposit control effectiveness of the detergent package such that it may invalidate the minimum recommended concentration reported in accordance with the applicable requirements of § 80.161(b)(1)(ii).

(iv) A change in minimum concentration requirements resulting from a modification of detergent additive composition shall not require a new detergent additive registration or a change in existing registration if:

(A) The modification is effected by a detergent blender only for its own use or for the use of parties which are subsidiaries of, or share common ownership with, the blender, and the modified detergent is not sold or transferred to other parties; and

(B) The modification is a dilution of the additive for the purpose of ensuring proper detergent flow in cold weather; and

(C) Gasoline is the only diluting agent used; and

(D) The diluted detergent is subsequently added to gasoline at a rate that attains the detergent's registered minimum recommended concentration, taking into account the dilution; and

(E) EPA is notified, either before or within seven days after the dilution action, of the identity of the detergent, the identity of the diluting material, the amount or percentage of the dilution, the change in treat rate necessitated by the dilution, and the locations and time period of diluted detergent usage. The notification shall be sent or faxed to the address in § 80.174(c).

(b) For detergent-active polymers and detergent-active carrier oils which are reported as the product of other chemical reactants:

(1) Identification of the reactant materials and the manufacturer's acceptance criteria for determining that these materials are suitable for use in synthesizing detergent components. The manufacturer must maintain documentation, and submit it to EPA upon request, demonstrating that the acceptance criteria reported to EPA are the same criteria which the manufacturer specifies to the suppliers of the reactant materials.

(2) A Gel Permeation Chromatograph (GPC), providing the molecular weight distribution of the polymer or detergent-active carrier oil components and the concentration of each chromatographic peak representing more than one percent of the total mass. For these results to be acceptable, the GPC test procedure must include equipment calibration with a polystyrene standard or other readily attainable and generally accepted calibration standard. The identity of the calibration standard must be provided, together with the GPC characterization of the standard.

(c) For non-detergent-active carrier oils, the following parameters:

(1) T10, T50, and T90 distillation points, and end boiling point, measured according to applicable test procedures cited in § 80.46.

(2) API gravity and viscosity

(3) Concentration of oxygen, sulfur, and nitrogen, if greater than or equal to 0.5 percent (by weight) of the carrier oil

(d) Description of an FTIR-based method appropriate for identifying the detergent additive package and its detergent-active components (polymers, carrier oils, and others) both qualitatively and quantitatively, together with the actual infrared spectra of the detergent additive package and each detergent-active component obtained by this test method. The FTIR infrared spectra submitted in connection with the registration of a detergent additive package must reflect the results of a test conducted on a sample of the additive containing the detergent-active component(s) at a concentration no lower than the concentration(s) (or the lower bound of a range of concentration) reported in the registration pursuant to paragraph (a)(3)(i)(B) of this section.

(e) To provide a basis for establishing an affirmative defense to presumptive liability pursuant to § 80.169(c)(4)(i)(D)(*2*)(*i*), specific physical parameters must be identified which the manufacturer considers adequate and appropriate, in combination with other information and sampling requirements under this subpart, for identifying the detergent additive package and monitoring its production quality control.

(1) Such parameters shall include (but need not be limited to) viscosity, density, and basic nitrogen content, unless the additive manufacturer specifically requests, and EPA approves, the substitution of other parameter(s) which the manufacturer considers to be more appropriate for a particular additive package. The request must be made in writing and must include an explanation of how the requested physical parameter(s) are helpful as indicator(s) of detergent production quality control. EPA will respond to such requests in writing; the additional parameters are not approved until the certifier receives EPA's written approval.

(2) The manufacturer shall identify a standardized measurement method, consistent with the chemical and physical nature of the detergent product, which will be used to measure each parameter. The documented ASTM repeatability for the method shall also be cited. The manufacturer's target value for each parameter in the detergent package, and the expected range of production values for each parameter, shall be specified.

(3) EPA will consider the parameter measurements to be an acceptable basis for establishing an affirmative defense to presumptive liability, if the expected range of variability differs from the target value by an amount no greater than five times the standard repeatability of the test procedure, or by no more than 10 percent of the target value, whichever is less. However, in the case of nitrogen analysis or other procedures for measuring concentrations of specific chemical compounds or elements, when the target value is less than 10 parts per million, a range of variability up to 50 percent of the target value will be considered acceptable.

(4) If a manufacturer wishes to rely on measurement methods or production variability ranges which do not conform to the above limitations, then the manufacturer must receive prior written approval from EPA in order to be assured that any related parameter measurements will be considered an acceptable basis for establishing an affirmative defense. A request for such allowance must be made in writing. It must fully justify the adequacy of the test procedure, explain why a broader range of variability is required, and provide evidence that the production detergent will perform adequately throughout the requested range of variability.

[61 FR 35366, July 5, 1996, as amended at 66 FR 55889, Nov. 5, 2001; 70 FR 69245, Nov. 14, 2005]

§ 80.163 Detergent certification options.

To be used to satisfy the detergency requirements under § 80.161(a), a detergent additive must be certified in accordance with the requirements of one or more of the options and suboptions described in this section. Where a certification option makes an additive eligible for use in a particular gasoline, that additive is also eligible for use in PRC which will be added to the particular gasoline. Under each option, the lowest additive concentration (LAC) or minimum recommended concentration registered for a detergent additive package, pursuant to § 80.161(b)(1)(ii), must equal or exceed the lowest detergent treat rate shown to be needed in the designated test fuel in order to meet the deposit control performance requirements specified in § 80.165.

(a) *National certification.* A detergent certified under a national certification option is eligible for use in gasoline which can be sold or dispensed anywhere within the United States or its territories (subject to approved State programs).

(1) *National generic certification option.* To be certified under this option, a candidate detergent must meet the deposit control performance test requirements and standards specified in § 80.165 using test fuels that conform to the requirements in § 80.164(b)(1), Table 1, Line 1. A detergent certified under this option is eligible to be used at a conforming LAC in any grade of gasoline, with or without an oxygenate component.

(i) *National nonoxygenate suboption.* The requirements for certification under this suboption are the same as those in paragraph (a)(1) of this section, except that, pursuant to § 80.164(a)(2)(ii), the certification test fuel shall contain no ethanol or other oxygenate. A detergent certified under this suboption is eligible to be used at a conforming LAC only in gasoline that does not contain an oxygenate component.

(ii) *National oxygenate-specific suboption.* The requirements for certification under this suboption are the same as those in paragraph (a)(1) of this section, except that, pursuant to § 80.164(a)(2)(iii), the certification test fuel shall contain an oxygenate compound other than ethanol. A detergent certified under this suboption is eligible to be used at a conforming LAC only in gasoline that contains no oxygenate component other than the one present in the test fuel.

(2) *National premium certification option.* To be certified under this option, a candidate detergent must meet the deposit control performance test requirements and standards specified in § 80.165 using test fuels that conform to the requirements in § 80.164(b)(1), Table 1, Line 2. A detergent certified under this option is eligible to be used at a conforming LAC only in premium grade gasoline, with or without an oxygenate component.

(i) *National premium nonoxygenate suboption.* The requirements for certification under this suboption are the same as those in paragraph (a)(2) of this section, except that, pursuant to § 80.164(a)(2)(ii), the certification test fuel shall contain no ethanol or other oxygenate. A detergent certified under this suboption is eligible to be used at a conforming LAC only in premium grade gasoline that does not contain an oxygenate component.

(ii) *National premium oxygenate-specific suboption.* The requirements for certification under this suboption are the same as those in paragraph (a)(2) of this section, except that, pursuant to § 80.164(a)(2)(iii), the certification test fuel shall contain an oxygenate compound other than ethanol. A detergent certified under this suboption is eligible to be used at a conforming LAC only in gasoline that is premium grade and contains no oxygenate component other than the one present in the test fuel.

(b) *Petroleum Administrative Defense District (PADD) Certification.* A detergent certified under a PADD certification option is eligible for use in gasoline which can be sold or dispensed to the ultimate purchaser, or to those parties who sell or dispense to the ultimate consumer, only within the PADD for which the certification was granted. The States and jurisdictions included within each PADD are specified in § 79.59(b)(3)(i) through (v), except

that, for purposes of PADD certification, the State of California is excluded from PADD V.

(1) *PADD generic certification option.* To be certified under this option, a candidate detergent must meet the deposit control performance test requirements and standards specified in § 80.165 using test fuels that conform to the requirements in § 80.164(b)(1), Table 2, for a selected PADD. A detergent certified under this option is eligible to be used at a conforming LAC in any grade of gasoline, with or without an oxygenate component, provided that the gasoline is ultimately dispensed in the selected PADD.

(i) *PADD nonoxygenate suboption.* The requirements for certification under this suboption are the same as those in paragraph (b)(1) of this section, except that, pursuant to § 80.164(a)(2)(ii), the certification test fuel shall contain no ethanol or other oxygenate. A detergent certified under this suboption is eligible to be used at a conforming LAC only in gasoline that is nonoxygenated and is ultimately dispensed in the selected PADD.

(ii) *PADD oxygenate-specific suboption.* The requirements for certification under this suboption are the same as those in paragraph (b)(1) of this section, except that, pursuant to § 80.164(a)(2)(iii), the certification test fuel shall contain an oxygenate compound other than ethanol. A detergent certified under this suboption is eligible to be used at a conforming LAC only in gasoline that contains no oxygenate component other than the one present in the test fuel and is ultimately dispensed in the selected PADD.

(2) *PADD premium certification option.* To be certified under this option, a candidate detergent must meet the deposit control performance test requirements and standards specified in § 80.165 using test fuels that conform to the requirements in § 80.164(b)(1), Table 2, for a selected PADD. A detergent certified under this option is eligible to be used at a conforming LAC only in gasoline that is premium grade (with or without an oxygenate component) and is ultimately dispensed in the selected PADD.

(i) *PADD premium nonoxygenate suboption.* The requirements for certification under this suboption are the same as those in paragraph (b)(2) of this section, except that, pursuant to § 80.164(a)(2)(ii), the certification test fuel shall contain no ethanol or other oxygenate. A detergent certified under this suboption is eligible to be used at a conforming LAC only in gasoline that is premium grade, contains no oxygenate component, and is ultimately dispensed in the selected PADD.

(ii) *PADD premium oxygenate-specific suboption.* The requirements for certification under this suboption are the same as those in paragraph (b)(2) of this section, except that, pursuant to § 80.164(a)(2)(iii), the certification test fuel shall contain an oxygenate compound other than ethanol. A detergent certified under this suboption is eligible to be used at a conforming LAC only in gasoline that is premium grade, contains no oxygenate component other than the one present in the test fuel, and is ultimately dispensed in the selected PADD.

(c) *Fuel-specific certification.* Except as provided in paragraph (c)(3) of this section, to be certified under the fuel-specific certification option, a candidate detergent must meet the deposit control performance test requirements and standards specified in § 80.165 using test fuels that conform to the requirements of § 80.164(c).

(1) A detergent certified under this option is eligible to be used at a conforming LAC only in the defined gasoline pool reported in the certification letter pursuant to § 80.161(b)(3).

(i) The gasoline pool may only include gasoline produced or distributed from the facilities covered by the fuel survey which was used to define the fuel-specific certification test fuels, pursuant to § 80.164(c)(1).

(ii) The gasoline pool must be kept segregated from any other gasoline prior to blending with the detergent additive.

(iii) Depending on the oxygenate components added to the test fuel pursuant to § 80.164(a)(2), the gasoline pool may be inclusive of all grades and all oxygenate blending characteristics (i.e., generic), or may be restricted to non-oxygenated gasoline, or to gasoline

containing a specific oxygenate compound. The certification may also be restricted to premium grade gasoline. Any such use restrictions must be specified in the certification letter. Provisions in §§ 80.168 and 80.171(a)(9) through (12) related to such use restrictions also apply.

(2) Detergent certification under this option entails special initial and annual reporting requirements, specified under §§ 80.161(b)(3)(vi) and 80.164(c)(3), which necessitate that the responsible party have control over and access to the segregated gasoline pool for which the detergent is certified. For this reason, the certifying party under this option is likely to be (but is not required to be) a fuel manufacturer or detergent blender, rather than the additive manufacturer.

(3) If a certifier demonstrates that the required test fuel representing a segregated pool of gasoline meets the deposit control performance standards specified in § 80.165 in the absence of a detergent additive, or using a detergent additive which has only PFID-control activity, then this gasoline pool (and PFID detergent, if applicable) can be certified accordingly under the fuel-specific option.

(4) Gasoline properly additized with a detergent certified under the fuel-specific option may be transferred or sold anywhere within the United States and its territories (subject to approved State programs).

(d) *CARB-Based Certification.* A valid certification under section 2257 of Title 13, California Code of Regulations (CARB certification) may be the basis for a certification under the following restrictions and conditions:

(1) A detergent certified under this option may be used at the LAC specified in the CARB certification only in gasoline that meets the requirements of California Phase II reformulated gasoline (pursuant to Title 13, Chapter 5, Article 1, Subarticle 2, California Code of Regulations, Standards for Gasoline Sold Beginning March 1, 1996). The grade(s) of California gasoline which may be so additized, and the oxygenate(s) which may be present, are as specified in the CARB certification for the detergent in question.

(2) The gasoline must be either: Additized in California; or sold or dispensed to the ultimate consumer in California (or to parties who sell or dispense to the ultimate consumer in California); or both additized and ultimately dispensed in California.

(3) A certification under this option will continue to be valid only as long as the CARB certification remains valid. The certifier must cease selling or using a detergent immediately upon being notified by CARB that the CARB certification for this detergent has been invalidated, and must notify EPA within 7 days of receipt of this notification.

[61 FR 35368, July 5, 1996]

§ 80.164 Certification test fuels.

(a) *General requirements.* This section provides specifications for the test fuels required in conjunction with the certification options described in § 80.163. For each such certification option, the associated test fuel must meet or exceed the levels of four basic fuel parameters (aromatics, fuel sulfur, olefins, and T–90) prescribed here and may also contain specified oxygenate compounds. In addition, pursuant to paragraph (b)(3) of this section, some fuels must undergo an IVD demonstration test before they are eligible to be used as test fuels under this certification program. Test fuel characteristics must be reported to EPA in the detergent certification letter required pursuant to § 80.161(b)(3).

(1) Quantitative specifications for the four basic fuel parameters, provided in paragraphs (b) and (c) of this section, refer to the levels of these parameters in the base gasoline prior to the addition of any oxygenate. The levels of the basic fuel parameters must be measured in accordance with applicable procedures in § 80.46.

(2) Oxygenate components of certification test fuels must be of fuel grade quality. The type and amount of oxygenate to be blended into the test fuel (if any) shall be as follows:

(i) To certify a detergent for generic use (i.e., for use in gasoline containing any oxygenate compound, as well as for use in nonoxygenated gasoline), the finished test fuel shall contain ethanol at 10 volume percent.

(ii) To certify a detergent specifically for use in nonoxygenated gasoline, no oxygenate compounds shall be added to the test fuel.

(iii) To certify a detergent specifically for use in gasoline blended with a specified oxygenate compound other than ethanol, the specified oxygenate must be added to the test fuel in an amount such that the finished fuel contains the oxygenate at the highest concentration at which the specific oxygenate may be used in in-use gasoline.

(3) No detergent-active substance other than the detergent additive package undergoing testing may be added to a certification test fuel. Typical nondetergent additives, such as antioxidants, corrosion inhibitors, and metal deactivators, may be present in the test fuel at the discretion of the additive certifier. In addition, any nondetergent additives (other than oxygenate compounds) which are commonly blended into gasoline and which are known or suspected to affect IVD or PFID formation, or to reduce the ability of the detergent in question to control such deposits, should be added to the test fuel for certification testing.

(4) Certification test requirements may be satisfied for a detergent additive using more than one batch of test fuel, provided that each batch satisfies all applicable test fuel requirements under this section.

(5) Unless otherwise required by this section, finished test fuels must conform to the requirements for commercial gasoline described in ASTM D 4814–95c, ''Standard Specification for Automotive Spark-Ignition Engine Fuel'', which is incorporated by reference. This incorporation by reference was approved by the Director of the Federal Register in accordance with 5 U.S.C. 552(a) and 1 CFR part 51. Copies may be inspected at U.S. EPA, OAR, 401 M St., SW., Washington, DC 20460, or at the National Archives and Records Administration (NARA). For information on the availability of this material at NARA, call 202–741–6030, or go to: *http://www.archives.gov/federal_register/code_of_federal_regulations/ibr_locations.html*. Copies of this material may be obtained from ASTM, 1916 Race St., Philadelphia, PA 19103.

(b) *National and PADD certification test fuels*. (1) Test fuels for the national generic and premium certification options must contain levels of the designated fuel parameters which meet or exceed the applicable values in Table 1. Test fuels for the PADD generic certification options must contain levels of the designated fuel parameters which meet or exceed the applicable values in Table 2. Test fuels for the PADD premium certification options must contain levels of the designated fuel parameters which meet or exceed the applicable values in Table 3. Oxygenate requirements for the respective nonoxygenate and oxygenate-specific suboptions are specified in paragraph (a)(2) of this section.

TABLE 1—NATIONAL CERTIFICATION TEST FUELS

Certification option	Required minimum fuel parameter values				
	Sulfur (weight %)	T–90 (F)	Olefins (volume %)	Aromatics (volume %)	Oxygenate (volume %)
1. National Generic	0.034	339	11.4	31.1	10% Ethanol.
2. National Premium	0.016	332	6.5	35.9	

TABLE 2—PADD-SPECIFIC GENERIC CERTIFICATION TEST FUELS

Certification option	Required minimum fuel parameter values				
	Sulfur (weight %)	T–90 (F)	Olefins (volume %)	Aromatics (volume %)	Oxygenate (volume %)
PADD 1 Generic	0.039	343	15.4	32.1	
PADD 2 Generic	0.034	338	10.3	29.3	
PADD 3 Generic	0.032	343	12.9	29.8	10% Ethanol.
PADD 4 Generic	0.050	326	10.0	27.1	
PADD 5 Generic	0.021	337	7.6	34.5	

TABLE 3—PADD-SPECIFIC PREMIUM-GRADE CERTIFICATION TEST FUELS

Certification option	Required minimum fuel parameter values				
	Sulfur (weight %)	T–90 (F)	Olefins (volume %)	Aromatics (volume %)	Oxygenate (volume %)
PADD 1 Premium	0.018	332	9.2	38.6	
PADD 2 Premium	0.014	333	6.0	34.3	
PADD 3 Premium	0.015	334	6.0	34.6	10% Ethanol.
PADD 4 Premium	0.040	319	6.0	22.3	
PADD 5 Premium	0.011	332	4.3	36.7	

(2) National and PADD certification test fuels must either be formulated to specification from normal refinery blend stocks, or drawn from finished gasoline supplies. The source of such samples must be normally-operating gasoline production or distribution facilities located in the U.S. Samples must not be drawn from a segregated gasoline pool that is or will be covered by a fuel-specific certification under § 80.163(c) on the date when the certification information under this option is submitted to EPA.

(3) To be eligible for use in detergent additive certification testing, in addition to the specifications above, national and PADD test fuels which are specially formulated from refinery blend stocks must themselves undergo testing to demonstrate their deposit-forming tendency. For this purpose, the unadditized, nonoxygenated test fuel must be subjected to the IVD control test procedure described in § 80.165(b). At the discretion of the tester, the duration of the demonstration test may be less than 10,000 miles, provided the results satisfy the standard of this paragraph. In order to qualify for use in certification testing, the formulated fuel's test results must meet or exceed the values shown in Table 4 for the relevant certification option. If the demonstration test results do not meet these criteria, then the formulated fuel may not be used for detergent certification testing.

TABLE 4—IVD DEMONSTRATION TEST CRITERIA

Certification option	Minimum required deposit level in IVD demonstration test (mg/valve, average)					
	National	PADD 1	PADD 2	PADD 3	PADD 4	PADD 5
Generic	290	290	260	290	260	260
Premium	260	260	235	260	235	235

(c) *Fuel-specific certification test fuels.* (1) Test fuels required for fuel-specific certification must contain levels of each of the four basic fuel parameters (aromatics, olefins, T–90, and fuel sulfur) at no less than their respective 65th percentile values in the segregated gasoline pool for which the detergent certification is sought in accordance with § 80.163(c). These values must be determined by the certifier as follows:

(i) At least once monthly for at least one complete year prior to the certification, the certifier must measure the levels of the required parameters in representative fuel samples contributed to the segregated gasoline pool by each participating refinery, terminal, or other fuel production or distribution facility. The fuel parameters must be measured in accordance with the test procedures in § 80.46. If the applicability of the fuel-specific certification is to be limited to premium gasoline, then the required fuel compositional data must be collected only from samples of premium gasoline.

(ii) The fuel composition survey results, weighted according to the percentage of gasoline contributed to the segregated gasoline pool from each participating facility, shall be used to construct a percentile distribution of the measured values for each of the fuel parameters.

(iii) Data from more than one year may be used to construct the required statistical distribution provided that only the total data from complete consecutive years is used and that all survey data must have been collected within three years of the date the certification information is submitted to EPA.

(iv) At the discretion of the certifier, other fuel parameters may be used to define the certification test fuels in addition to the four required parameters. To be taken into account by EPA in case of confirmatory testing pursuant to § 80.167, such additional parameters must be surveyed and analyzed according to the same requirements applicable to the four standard parameters. In addition, any optional parameters must be measured using test procedures which conform to reasonable and customary standards of repeatability and reproducibility, and reasonable and customary limits of detection and accuracy for the type of test procedure or analytic procedure in question.

(v) Using the percentile distributions calculated from the survey data for the four required parameters and any additional discretionary parameters, the 65th percentile value for each such parameter shall be determined. Prior to the addition of any oxygenate compound, the fuel-specific certification test fuel shall contain each specified parameter at a level or concentration no less than this 65th percentile value. Test fuel oxygenate requirements for generic, nonoxygenate, and oxygenate-specific certification suboptions are specified in paragraph (a)(2) of this section.

(2) Fuel-specific certification test fuels must either be formulated to specification from the same refinery blend stocks which are normally used to blend the gasolines included in the subject gasoline pool, or drawn from the finished fuel supplies which contribute to this pool of gasoline. Fuel-specific certification test fuels need not undergo an IVD demonstration test prior to use in certification testing.

(3) The certifier must submit an annual report to EPA within 30 days of the anniversary of the initial certification effective date. Failure to submit the annual report by the required date will invalidate the fuel-specific certification and may subject the certifier to liability and penalties under §§ 80.169 and 80.172. The purpose of the annual report is to update the information on the composition of the segregated gasoline pool that was characterized by the initial fuel survey.

(i) For this purpose, the same fuel survey and statistical analysis requirements that were conducted pursuant to paragraphs (c)(1)(i),(ii), and (iv) of this section must be repeated, using data for the most current twelve-month period from each of the production/distribution facilities that contributed to the original fuel survey.

(ii) The annual report must present the percentile distributions for each fuel parameter as determined from the new survey data and, for each measured fuel parameter, must compare the newly determined 50th percentile value with the 60th percentile value for that parameter as determined in the original fuel survey.

(iii) If the new 50th percentile level for any fuel parameter is greater than or equal to the 60th percentile level reported in the initial certification, then the fuel-specific certification is no longer valid. In such instance, the certifier must immediately discontinue the sale and use of the subject detergent under the conditions of the fuel-specific certification and must immediately notify any downstream customers/recipients of the subject detergent that the certification is no longer valid and that their use of the detergent must discontinue within seven days. To avoid liability and penalties under §§ 80.169 and 80.172, the certifier must take these remedial steps within 45 days of the anniversary of the original fuel-specific certification. Downstream customers/recipients must discontinue usage of the detergent within seven days of receipt of notification of the detergent's invalidity to avoid such liability.

(4) The fuel composition survey results which support the original test fuel specifications and the annual statistical analyses, along with related documentation on test methods and statistical procedures, shall be retained by the certifier for a period of at least

five years, and shall be made available to EPA upon request.

[61 FR 35369, July 5, 1996]

§ 80.165 Certification test procedures and standards.

This section specifies the deposit control test requirements and performance standards which must be met in order to certify detergent additives for use in unleaded gasoline, pursuant to § 80.161(b)(1)(ii)(A)(*2*). These standards must be met in the context of the specific test procedures identified in paragraphs (a) and (b) of this section, except as provided in paragraph (c) of this section. In any case, the testing must be conducted and the performance standards met when the subject detergent additive is mixed in a test fuel meeting all relevant requirements of § 80.164, including the deposit-forming tendency demonstration specified in § 80.164(b)(3), if applicable. Complete test documentation must be submitted by the certifying party within 30 days of receipt of a written request from EPA for such records.

(a) *Fuel injector deposit control testing.* (1) The required test fuel must produce no more than 5% flow restriction in any one injector when tested in accordance with ASTM D 5598–94, ''Standard Test Method for Evaluating Unleaded Automotive Spark-Ignition Engine Fuel for Electronic Port Fuel Injector Fouling,'' 1994, which is incorporated by reference. This incorporation by reference was approved by the Director of the Federal Register in accordance with 5 U.S.C. 552(a) and 1 CFR part 51. Copies may be inspected at U.S. EPA, OAR, 401 M St., SW., Washington, DC 20460, or at the National Archives and Records Administration (NARA). For information on the availability of this material at NARA, call 202–741–6030, or go to: *http://www.archives.gov/federal_register/code_of_federal_regulations/ibr_locations.html.* Copies of this material may be obtained from ASTM, 1916 Race St., Philadelphia, PA 19103.

(2) At the option of the certifier, fuel injector flow may be measured at intervals during the 10,000 mile test cycle described in ASTM D 5598–94, in addition to the flow measurements required at the completion of the test cycle, but not more than every 1,000 miles.

(b) *Intake valve deposit control testing.* The required test fuel must produce the accumulation of less than 100 mg of intake valve deposits on average when tested in accordance with ASTM D 5500–94, ''Standard Test Method for Vehicle Evaluation of Unleaded Automotive Spark-Ignition Engine Fuel for Intake Valve Deposit Formation,'' 1994, which is incorporated by reference. This incorporation by reference was approved by the Director of the Federal Register in accordance with 5 U.S.C. 552(a) and 1 CFR part 51. Copies may be inspected at U.S. EPA, OAR, 401 M St., SW., Washington, DC 20460, or at the National Archives and Records Administration (NARA). For information on the availability of this material at NARA, call 202–741–6030, or go to: *http://www.archives.gov/federal_register/code_of_federal_regulations/ibr_locations.html.* Copies of this material may be obtained from ASTM, 1916 Race St., Philadelphia, PA 19103.

(c) If conducted using test fuels meeting all relevant requirements of § 80.164, and completed prior to September 3, 1996, then the PFID and IVD control test procedures required for detergent certification in California (specified in section 2257 of Title 13, California Code of Regulations) will also be considered acceptable. California Air Resources Board, ''Test Method for Evaluating Port Fuel Injector (PFI) Deposits in Vehicle Engines'', March 1, 1991, and California Air Resources Board, ''BMW—10,000 Miles Intake Valve Test Procedure'', March 1, 1991, are incorporated by reference. This incorporation by reference was approved by the Director of the Federal Register in accordance with 5 U.S.C. 552(a) and 1 CFR part 51. Copies may be inspected at U.S. EPA, OAR, 401 M St., SW., Washington, DC 20460, or at the National Archives and Records Administration (NARA). For information on the availability of this material at NARA, call 202–741–6030, or go to: *http://www.archives.gov/federal_register/code_of_federal_regulations/ibr_locations.html.* Copies of this material may be obtained from the California Air Resource Board, Stationary

Source Division, 2020 L Street, PO Box 2815, Sacramento, CA, 95814.

[61 FR 35371, July 5, 1996]

§ 80.166 Carburetor deposit control performance test and test fuel guidelines.

EPA will use the guidelines in this section to evaluate the adequacy of carburetor deposit control test data, used to support the minimum concentration recommended for detergents used in leaded gasoline pursuant to § 80.161(b)(1)(ii)(B).

(a) *Carburetor Deposit Control Test Procedure and Performance Standard Guidelines*. For demonstration of carburetor deposit control performance, any generally accepted vehicle, engine, or bench test procedure and associated performance standard for carburetor deposit control will be considered adequate. Port and throttle body fuel injector deposit control test data will also be considered to be adequate demonstration of an additive's ability to control carburetor deposits. Examples of acceptable test procedures for demonstration of carburetor deposit control, in addition to the fuel injector test procedure listed in § 80.165(a), are contained in the following references:

(1) ''Test Method for Evaluating Port Fuel Injector (PFI) Deposits in Vehicle Engines'', March 1, 1991, Section 2257, Title 13, California Code of Regulations.

(2) ''A Vehicle Test Technique for Studying Port Fuel Injector Deposits—A Coordinating Research Council Program'', Robert Tupa et al., SAE Technical paper No. 890213, 1989.

(3) ''The Effects of Fuel Composition and Additives on Multiport Fuel Injector Deposits'', Jack Benson et al., SAE Technical Paper Series No. 861533, 1986.

(4) ''Injector Deposits—The Tip of Intake System Deposit Problems'', Brian Taneguchi, et al., SAE Technical Paper Series No. 861534, 1986.

(5) ''Fuel Injector, Intake Valve, and Carburetor Detergency Performance of Gasoline Additives'', C.H. Jewitt et al., SAE Technical Paper No. 872114, 1987.

(6) ''Carburetor Cleanliness Test Procedure, State-of-the-Art Summary, Report: 1973–1981'', Coordinating Research Council, CRC Report No. 529, Coordinating Research Council Inc. (CRC), 219 perimeter Center Parking, Atlanta, Georgia, 30346.

(b) *Carburetor Deposit Control Test Fuel Guidelines*. (1) The gasoline used in the tests described in paragraph (a) of this section must contain the detergent-active components of the subject detergent additive package in an amount which corresponds to the minimum recommended concentration recorded in the respective detergent registration, or less than this amount.

(2) The test fuel must not contain any detergent-active components other than those recorded in the subject detergent certification.

(3) The composition of the test fuel used in carburetor deposit control testing, conducted to support the claimed effectiveness of detergents used in leaded gasoline, should be reasonably typical of in-use gasoline in its tendency to form carburetor deposits (or more severe than typical in-use fuels) as defined by the olefin and sulfur content. A test fuel conforming to these compositional guidelines may be sampled directly from finished gasolines or may be blended to specification using typical refinery blend stocks. Test data using leaded fuels is preferred for this purpose, but data collected using unleaded fuels may also be acceptable provided that some correlation with additive performance in leaded fuels is available.

[61 FR 35372, July 5, 1996]

§ 80.167 Confirmatory testing.

EPA may test a detergent to confirm that the required performance levels are met. Based on the findings of this confirmatory testing, a detergent certification may be denied or revoked under the provisions of § 80.161(e).

(a) Confirmatory testing conducted to evaluate the validity of detergent certifications under the national, PADD, or fuel-specific options will generally entail a single vehicle test using the procedures detailed in § 80.165. The test fuel(s) used in conducting confirmatory certification testing will contain the specified fuel parameters at or below the minimum levels specified in § 80.164, and will otherwise conform to the applicable certification test fuel specifications therein.

(b) Confirmatory certification testing conducted to evaluate the validity of CARB-based detergent certifications will use the subject detergent in test fuel(s) containing the relevant fuel parameters at levels no greater than the maximum levels for which the CARB certification was granted. The test procedures will be conducted pursuant to the procedures specified under section 2257 of Title 13, California Code of Regulations.

(c) Confirmatory testing conducted to evaluate the validity of registration and certification information specific to detergent use in leaded gasoline will use the subject detergent in a test fuel containing the test fuel parameters at levels no greater than those prescribed in § 80.164. EPA will make all reasonable efforts to use the same test procedure for confirmatory testing purposes as was used by the certifier in conducting deposit control performance testing.

(d) When EPA decides to conduct confirmatory testing on a fuel or additive which is not readily available in the open market, EPA may request that the detergent certifier and/or manufacturer of such fuel or additive furnish a sample in the needed quantity. If testing is conducted to evaluate the validity of a detergent certification under the fuel-specific option, the detergent blender must supply EPA with test fuel, or with blend stocks with which to formulate such test fuel, in sufficient quantity to conduct the specified deposit control performance testing. The fuel or additive manufacturer shall comply with a sample request made pursuant to this paragraph within 30 days of receipt of the request.

[61 FR 35372, July 5, 1996]

§ 80.168 Detergent certification program controls and prohibitions.

(a)(1) No person shall sell, offer for sale, dispense, supply, offer for supply, transport, or cause the transportation of gasoline to the ultimate consumer for use in motor vehicles or in any off-road engines (except as provided in § 80.173), or to a gasoline retailer or wholesale purchaser-consumer, and no person shall detergent-additize gasoline, unless such gasoline is additized in conformity with the requirements of § 80.161. No person shall cause the presence of any gasoline in the gasoline distribution system unless such gasoline is additized in conformity with the requirements of § 80.161.

(2) Gasoline has been additized in conformity with the requirements of § 80.161 when the detergent component satisfies the requirements of § 80.161 and when:

(i) The gasoline has been additized in conformity with the detergent composition and purpose-in-use specifications of a detergent certified in accordance with this subpart, and in accordance with at least the minimum concentration specifications of that detergent as certified or as otherwise provided under § 80.161(d); or

(ii) The gasoline is composed of two or more commingled gasolines and each component gasoline has been additized in conformity with the detergent composition and purpose-in-use specifications of a detergent certified in accordance with this subpart, and in accordance with at least the minimum concentration specifications of that detergent as certified or as otherwise provided under § 80.161(d); or

(iii) The gasoline is composed of a gasoline commingled with a post-refinery component (PRC), and both of these components have been additized in conformity with the detergent composition and use specifications of a detergent certified in accordance with this subpart, and in accordance with at least the minimum concentration specifications of that detergent as certified or as otherwise provided under § 80.161(d).

(b) No person shall blend detergent into gasoline or PRC unless such person complies with the volumetric additive reconciliation requirements of § 80.170.

(c) No person shall sell, offer for sale, dispense, supply, offer for supply, store, transport, or cause the transportation of any gasoline, detergent, or detergent-additized PRC, unless the product transfer document for the gasoline, detergent or detergent-additized PRC complies with the requirements of § 80.171.

(d) No person shall refine, import, manufacture, sell, offer for sale, dispense, supply, offer for supply, store,

transport, or cause the transportation of any detergent that is to be used as a component of detergent-additized gasoline or detergent-additized PRC unless such detergent conforms with the composition specifications of a detergent certified in accordance with this subpart and the detergent otherwise complies with the requirements of § 80.161. No person shall cause the presence of any detergent in the detergent, PRC, or gasoline distribution systems unless such detergent complies with the requirements of § 80.161.

(e)(1) No person shall sell, offer for sale, dispense, supply, offer for supply, transport, or cause the transportation of detergent-additized PRC unless the PRC has been additized in conformity with the requirements of § 80.161. No person shall cause the presence in the PRC or gasoline distribution systems of any detergent-additized PRC that fails to conform to the requirements of § 80.161.

(2) PRC has been additized in conformity with the requirements of § 80.161 when the detergent component satisfies the requirements of § 80.161 and when:

(i) The PRC has been additized in accordance with the detergent composition and use specifications of a detergent certified in accordance with this subpart and in conformity with at least the minimum concentration specifications of that detergent as certified or as otherwise provided under § 80.161(d), or

(ii) The PRC is composed of two or more commingled PRCs, and each component has been additized in accordance with the detergent composition and use specifications of a detergent certified in accordance with this subpart, and in conformity with at least the minimum concentration specifications of that detergent as certified or as otherwise provided under § 80.161(d).

[61 FR 35373, July 5, 1996]

§ 80.169 Liability for violations of the detergent certification program controls and prohibitions.

(a) *Persons Liable*—(1) *Gasoline non-conformity*. Where gasoline contained in any storage tank at any facility owned, leased, operated, controlled or supervised by any gasoline refiner, importer, carrier, distributor, reseller, retailer, wholesale purchaser-consumer, oxygenate blender, or detergent blender, is found in violation of any of the prohibitions specified in § 80.168(a), the following persons shall be deemed in violation:

(i) Each gasoline refiner, importer, carrier, distributor, reseller, retailer, wholesale purchaser-consumer, oxygenate blender, or detergent blender, who owns, leases, operates, controls or supervises the facility (including, but not limited to, a truck or individual storage tank) where the violation is found;

(ii) Each gasoline refiner, importer, distributor, reseller, retailer, wholesale purchaser-consumer, oxygenate blender, detergent manufacturer, distributor, or blender, who refined, imported, manufactured, sold, offered for sale, dispensed, supplied, offered for supply, stored, detergent additized, transported, or caused the transportation of the detergent-additized gasoline (or the base gasoline component, the detergent component, or the detergent-additized post-refinery component of the gasoline) that is in violation, and each such party that caused the gasoline that is in violation to be present in the gasoline distribution system; and

(iii) Each gasoline carrier who dispensed, supplied, stored, or transported any gasoline in the storage tank containing gasoline found to be in violation, and each detergent carrier who dispensed, supplied, stored, or transported the detergent component of any PRC or gasoline in the storage tank containing gasoline found to be in violation, provided that EPA demonstrates, by reasonably specific showings by direct or circumstantial evidence, that the gasoline or detergent carrier caused the violation.

(2) *Post-refinery component non-conformity*. Where detergent-additized PRC contained in any storage tank at any facility owned, leased, operated, controlled or supervised by any gasoline refiner, importer, carrier, distributor, reseller, retailer, wholesale purchaser-consumer, oxygenate blender, detergent manufacturer, carrier, distributor, or blender, is found in violation of the prohibitions specified in

§ 80.168(e), the following persons shall be deemed in violation:

(i) Each gasoline refiner, importer, carrier, distributor, reseller, retailer, wholesale-purchaser consumer, oxygenate blender, detergent manufacturer, carrier, distributor, or blender, who owns, leases, operates, controls or supervises the facility (including, but not limited to, a truck or individual storage tank) where the violation is found;

(ii) Each gasoline refiner, importer, distributor, reseller, retailer, wholesale purchaser-consumer, oxygenate blender, detergent manufacturer, distributor, or blender, who sold, offered for sale, dispensed, supplied, offered for supply, stored, detergent additized, transported, or caused the transportation of the detergent-additized PRC (or the detergent component of the PRC) that is in violation, and each such party that caused the PRC that is in violation to be present in the PRC or gasoline distribution systems; and

(iii) Each carrier who dispensed, supplied, stored, or transported any detergent-additized PRC in the storage tank containing PRC that is in violation, and each detergent carrier who dispensed, supplied, stored, or transported the detergent component of any detergent-additized PRC which is in the storage tank containing detergent-additized PRC found to be in violation, provided that EPA demonstrates by reasonably specific showings by direct or circumstantial evidence, that the gasoline or detergent carrier caused the violation.

(3) *Detergent non-conformity*. Where the detergent (prior to additization) contained in any storage tank or container found at any facility owned, leased, operated, controlled or supervised by any gasoline refiner, importer, carrier, distributor, reseller, retailer, wholesale purchaser-consumer, oxygenate blender, detergent manufacturer, carrier, distributor, or blender, is found in violation of the prohibitions specified in § 80.168(d), the following persons shall be deemed in violation:

(i) Each gasoline refiner, importer, carrier, distributor, reseller, retailer, wholesale purchaser-consumer, oxygenate blender, detergent manufacturer, carrier, distributor, or blender, who owns, leases, operates, controls or supervises the facility (including, but not limited to, a truck or individual storage tank) where the violation is found;

(ii) Each gasoline refiner, importer, distributor, reseller, retailer, wholesale purchaser-consumer, oxygenate blender, detergent manufacturer, distributor, or blender, who sold, offered for sale, dispensed, supplied, offered for supply, stored, transported, or caused the transportation of the detergent that is in violation, and each such party that caused the detergent that is in violation to be present in the detergent, gasoline, or PRC distribution systems; and

(iii) Each gasoline or detergent carrier who dispensed, supplied, stored, or transported any detergent which is in the storage tank or container containing detergent found to be in violation, provided that EPA demonstrates, by reasonably specific showings by direct or circumstantial evidence, that the gasoline or detergent carrier caused the violation.

(4) *Volumetric additive reconciliation*. Where a violation of the volumetric additive reconciliation requirements established by § 80.168(b) has occurred, the following persons shall be deemed in violation:

(i) Each detergent blender who owns, leases, operates, controls or supervises the facility (including, but not limited to, a truck or individual storage tank) where the violation has occurred; and

(ii) Each gasoline refiner, importer, carrier, distributor, reseller, retailer, wholesale purchaser-consumer, or oxygenate blender, and each detergent manufacturer, carrier, distributor, or blender, who refined, imported, manufactured, sold, offered for sale, dispensed, supplied, offered for supply, stored, transported, or caused the transportation of the detergent-additized gasoline, the base gasoline component, the detergent component, or the detergent-additized PRC of the gasoline that is in violation, provided that EPA demonstrates, by reasonably specific showings by direct or circumstantial evidence, that such person caused the violation.

(5) *Product transfer document*. Where a violation of § 80.168(c) is found at a facility owned, leased, operated, controlled, or supervised by any gasoline

refiner, importer, carrier, distributor, reseller, retailer, wholesale purchaser-consumer, oxygenate blender, detergent manufacturer, carrier, distributor, or blender, the following persons shall be deemed in violation: each gasoline refiner, importer, carrier, distributor, reseller, retailer, wholesale purchaser-consumer, oxygenate blender, detergent manufacturer, carrier, distributor, or blender, who owns, leases, operates, control or supervises the facility (including, but not limited to, a truck or individual storage tank) where the violation is found.

(b) *Branded Refiner Vicarious Liability*. Where any violation of the prohibitions specified in § 80.168 has occurred, with the exception of violations of § 80.168(c), a refiner will also be deemed liable for violations occurring at a facility operating under such refiner's corporate, trade, or brand name or that of any of its marketing subsidiaries. For purposes of this section, the word facility includes, but is not limited to, a truck or individual storage tank.

(c) *Defenses*. (1) In any case in which a gasoline refiner, importer, distributor, carrier, reseller, retailer, wholesale purchaser-consumer, oxygenate blender, detergent distributor, carrier, or blender, is in violation of any of the prohibitions of § 80.168, pursuant to paragraph (a) or (b) of this section as applicable, the regulated party shall be deemed not in violation if it can demonstrate:

(i) That the violation was not caused by the regulated party or its employee or agent (unless otherwise provided in this paragraph (c));

(ii) That product transfer documents account for the gasoline, detergent, or detergent-additized PRC in violation and indicate that the gasoline, detergent, or detergent-additized PRC satisfied relevant requirements when it left the party's control; and

(iii) That the party has fulfilled the requirements of paragraphs (c) (2) or (3) of this section, as applicable.

(2) *Branded refiner*. Where a branded refiner is in violation of any of the prohibitions of § 80.168 as a result of violations occurring at a facility (including, but not limited to, a truck or individual storage tank) which is operating under the corporate, trade or brand name of a refiner or that of any of its marketing subsidiaries, the refiner shall be deemed not in violation if it can demonstrate, in addition to the defense requirements stated in paragraph (c)(1) of this section, that the violation was caused by:

(i) An act in violation of law (other than these regulations), or an act of sabotage or vandalism, whether or not such acts are violations of law in the jurisdiction where the violation of the prohibitions of § 80.168 occurred; or

(ii) The action of any gasoline refiner, importer, reseller, distributor, oxygenate blender, detergent manufacturer, distributor, blender, or retailer or wholesale purchaser-consumer supplied by any of these persons, in violation of a contractual undertaking imposed by the refiner designed to prevent such action, and despite the implementation of an oversight program, including, but not limited to, periodic review of product transfer documents by the refiner to ensure compliance with such contractual obligation; or

(iii) The action of any gasoline or detergent carrier, or other gasoline or detergent distributor not subject to a contract with the refiner but engaged by the refiner for transportation of gasoline, PRC, or detergent, to a gasoline or detergent distributor, oxygenate blender, detergent blender, gasoline retailer or wholesale purchaser consumer, despite specification or inspection of procedures or equipment by the refiner which are reasonably calculated to prevent such action.

(iv) In this paragraph (c)(2), to show that the violation ''was caused'' by any of the specified actions, the party must demonstrate by reasonably specific showings, by direct or circumstantial evidence, that the violation was caused or must have been caused by another.

(3) *Detergent blender*. In any case in which a detergent blender is liable for violating any of the prohibitions of § 80.168, the detergent blender shall not be deemed in violation if it can demonstrate, in addition to the defense requirements stated in paragraph (c)(1) of this section, the following:

(i) That it obtained or supplied, as appropriate, prior to the detergent blending, accurate written instructions from the detergent manufacturer or

other party with knowledge of such instructions, specifying the appropriate LAC for the detergent, as specified in § 80.161(b)(1)(ii), together with any use restrictions which pertain to this LAC pursuant to the detergent's certification; and

(ii) That it has implemented a quality assurance program that includes, but is not limited to, a periodic review of its supporting product transfer and volume measurement documents to confirm the correctness of its product transfer and volumetric additive reconciliation documents created for all products it additized.

(4) *Detergent manufacturer*. (i) *Presumptive Liability Affirmative Defense*. Notwithstanding the provisions of paragraph (c)(1) of this section, in any case in which a detergent manufacturer is liable for violating any of the prohibitions of § 80.168, the detergent manufacturer shall be deemed not in violation if it can demonstrate each of the following:

(A) Product transfer documents which account for the detergent component of the product in violation and which indicate that such detergent satisfied all relevant requirements when it left the detergent manufacturer's control.

(B) Written blending instructions which, pursuant to § 80.161(c), were supplied by the detergent manufacturer to its customer who purchased or obtained from the manufacturer the detergent component of the product determined to be in violation. The written blending instructions must have been supplied by the manufacturer prior to the customer's use or sale of the detergent. The instructions must accurately specify both the appropriate LAC for the detergent, pursuant to § 80.161(b)(1)(ii), plus any use restrictions which may pertain to this LAC pursuant to the detergent's certification.

(C) If the detergent batch used in the noncomplying product was produced less than one year before the manufacturer was notified by EPA of the possible violation, then the manufacturer must provide FTIR test results for the batch in question.

(*1*) The FTIR analysis may have been conducted on the subject detergent batch at the time it was manufactured, or may be conducted on a sample of that batch which the manufacturer retained for such purpose at the time the batch was manufactured.

(*2*) To establish that, when it left the manufacturer's control, the detergent component of the noncomplying product was in conformity with the chemical composition and concentration specifications reported pursuant to § 80.161(b), the FTIR test results for the detergent batch used in the noncomplying product must be consistent with the FTIR results submitted at the time of registration pursuant to § 80.162(d).

(D) If the detergent batch used in the noncomplying product was produced more than one year prior to the manufacturer's notification by EPA of the possible violation, then the manufacturer must provide either:

(*1*) FTIR test results for the batch in question as specified in the preceding paragraph (c)(4)(i)(C) of this § 80.169(c); or

(*2*) The following materials:

(*i*) Documentation for the batch in question, showing that its measured viscosity, density, and basic nitrogen content, or any other such physical parameter(s) which EPA may have approved for monitoring production quality control, were within the acceptable range of production values specified in the certification pursuant to § 80.162(e); and

(*ii*) If the detergent registration identifies polymeric component(s) of the detergent package as the product(s) of other chemical reactants, documentation that the reagents used to synthesize the detergent batch in question were the same as those specified in the registration and that they met the manufacturer's normal acceptance criteria reported pursuant to § 80.162(b)(1).

(ii) *Detergent manufacturer causation liability*. In any case in which a detergent manufacturer is liable for a violation of § 80.168, and the manufacturer establishes an affirmative defense to such liability pursuant to § 80.169(c)(4)(i), the detergent manufacturer will nonetheless be deemed liable for the violation of § 80.168 if EPA can demonstrate, by reasonably specific showings by direct or circumstantial

evidence, that the detergent manufacturer caused the violation.

(5) *Defense against liability where more than one party may be liable for VAR violations.* In any case in which a party is presumptively or vicariously liable for a violation of § 80.170, except for the VAR record requirements pursuant to § 80.170(g), such party shall not be deemed liable if it can establish the following:

(i) Prior to the violation it had entered into a written contract with another potentially liable detergent blender party (''the assuming party''), under which that other party assumed legal responsibility for fulfilling the VAR requirement that had been violated;

(ii) The contract included reasonable oversight provision to ensure that the assuming party fulfilled its VAR responsibilities (including, but not limited to, periodic review of VAR records) and the oversight provision was actually implemented by the party raising the defense;

(iii) The assuming party is fiscally sound and able to pay its penalty for the VAR violation; and

(iv) The employees or agents of the party raising the defense did not cause the violation.

(6) *Defense to liability for gasoline nonconformity violations caused solely by the addition of misadditized ethanol or other PRC to the gasoline.* In any case in which a party is presumptively or vicariously liable for a gasoline non-conformity violation of § 80.168(a) caused solely by another party's addition of misadditized ethanol or other PRC to the gasoline, the former party shall not be deemed liable for the violation, provided that it can establish that it has fulfilled the defense requirements of paragraphs (c)(1) (i) and (ii) of this section.

(7) *Detergent tank transitioning defenses.* The commingling of two detergents in the same detergent storage tank will not be deemed to violate or cause violations of any of the provisions of this subpart, provided the following conditions are met:

(i) The commingling must occur during a legitimate detergent transitioning event, *i.e.*, a shift from the use of one detergent to another through the delivery of the new detergent into the same tank that contains the original detergent; and

(ii) Any use restrictions applicable to the new detergent's certification also apply to the combined detergents; and

(iii) The commingling event must be documented, either on the VAR formula record or on attached supporting records; and

(iv) Notwithstanding any contrary provisions in § 80.170, a VAR formula record must be created for the combined detergents. The VAR compliance period must begin no later than the time of the commingling event. However, at the blender's option, the compliance period may begin earlier, thus including use of the uncombined original detergent within the same period, provided that the 31-day limitation pursuant to § 80.170(a)(6) is not exceeded; and

(v) The VAR formula record must also satisfy the requirements in one of the following paragraphs (c)(7)(v) (A) through (C) of this section, whichever applies to the commingling event. If neither paragraph (c)(7)(v) (A) nor (B) of this section initially applies, then the blender may drain and subsequently redeliver the original detergent into the tank in restricted amounts, in order to meet the conditions of paragraph (c)(7)(v) (A) or (B) of this section. Otherwise, the blender must comply with paragraph (c)(7)(v)(C) of this section.

(A) If both detergents have the same LAC, and the original detergent accounts for no more than 20 percent of the tank's total delivered volume after addition of the new detergent, then the VAR formula record is required to identify only the use of the new detergent.

(B) If the two detergents have different LACs and the original detergent accounts for 10 percent or less of the tank's total delivered volume after addition of the new detergent, then the VAR formula record is required to identify only the use of the new detergent, and must attain the LAC of the new detergent. If the original detergent's LAC is greater than that of the new detergent, then the compliance period may begin earlier than the date of the commingling event (pursuant to

paragraph (c)(7)(iv) of this section) only if the original detergent does not exceed 10 percent of the total detergent used during the compliance period.

(C) If neither of the preceding paragraphs (c)(7)(v) (A) or (B) of this section applies, then the VAR formula record must identify both of the commingled detergents, and must use and attain the higher LAC of the two detergents. Once the commingled detergent has been depleted by an amount equal to the volume of the original detergent in the tank at the time the new detergent was added, subsequent VAR formula records must identify and use the LAC of only the new detergent.

(8) *Transition from noncertified to certified detergent.* Notwithstanding the prohibitions in §§ 80.161(a)(3) and 80.168, after June 30, 1997, the addition to gasoline or PRC of a detergent which has not been certified pursuant to § 80.161 shall not be deemed to violate or cause violations of provisions of this subpart, provided that all of the following conditions are met:

(i) The detergent was received by the detergent blender prior to July 1, 1997 and is used prior to January 1, 1998. Documentation which supports these dates must be maintained for at least five years and must be available for EPA's inspection upon request;

(ii) The detergent is added to gasoline or PRC only in combination with a certified detergent and, at any one time, accounts for no more than 10 percent of the detergent tank's delivered volume;

(iii) The total volume of detergent added to the gasoline or PRC is sufficient to attain the LAC of the certified detergent; and

(iv) Use restrictions associated with the certified detergent are adhered to.

(9) *Procedures for curing use restrictions.* In the case of a fuel product which has been additized with a detergent under the conditions of a use-restricted certification (pursuant to § 80.163), the use restriction can be negated (''cured'') by application of the procedures in this paragraph (c)(9). A party shall not be liable for violations of § 80.168(a) or (e) caused solely by the additization or subsequent use of gasoline or PRC in violation of such use restriction, provided that the following steps and conditions are applied before EPA has identified the nonconformity and prior to the sale or transfer of nonconforming product to the ultimate consumer:

(i) Additional detergent must be added in sufficient quantity to provide effective deposit control, taking into account both the amount of detergent previously added and the final anticipated volume and composition of the subject fuel product.

(ii) The additional detergent may be either the original detergent or a different detergent, so long as the additional detergent has been separately certified both for use with the subject fuel product and for use with the type of fuel product associated with the restriction which the party wishes to negate by the curing procedure. Detergents which have not been separately certified for both types of fuel products are not eligible to be used for this curing procedure.

(iii) If a fuel product has been detergent additized under the conditions of a use-restricted certification which would preclude the addition of an oxygenate or other PRC, then such oxygenate or other PRC may nevertheless be added to that fuel product under this curing procedure, provided that additional eligible detergent is added, in an amount which equals or exceeds the number of gallons (D_A) derived from the following equation:

$$\text{Additional Detergent Volume} = D_A = Vp(LAC_2 - LAC_1) + V(1 - p)LAC_2$$

where:

V = Final volume of fuel product (in gallons)

p = Fraction of final fuel product composed of the original (uncombined) fuel product

LAC_2 = Detergent's LAC certified for the final combined fuel product (in gallons of detergent per 1,000 gallons of fuel product)

LAC_1 = Detergent's LAC certified for the original (uncombined) fuel product (in gallons of detergent per 1,000 gallons of fuel product)

(iv) In other instances in which gasoline or PRC has been additized in violation of a detergent use restriction, and no additional fuel components are to be added, such use restriction can be cured by the addition of eligible detergent in an amount which equals or exceeds the number of gallons (DA) derived from the following equation,

which is a simplified version of the previous equation:

$$\text{Additional Detergent Volume} = D_A = V(LAC_2 - LAC_1)$$

where:

V = Volume of fuel product (in gallons) to be cured of the use restriction

LAC_2 = Detergent's LAC certified for the fuel product without the use restriction (in gallons of detergent per 1,000 gallons of fuel product)

LAC_1 = Detergent's LAC certified for the fuel product with the use restriction to be cured (in gallons of detergent per 1,000 gallons of fuel product)

(v) In all such instances, a curing VAR must be created and maintained, which documents the use of the appropriate equation as specified above, and otherwise complies with the requirements of § 80.170(f)(6).

[61 FR 35373, July 5, 1996, as amended at 61 FR 58747, Nov. 18, 1996; 66 FR 55890, Nov. 5, 2001]

§ 80.170 Volumetric additive reconciliation (VAR), equipment calibration, and recordkeeping requirements.

This section contains requirements for automated detergent blending facilities and hand-blending detergent facilities. All gasoline and all PRC intended for use in gasoline must be additized unless otherwise noted in supporting VAR records, and must be accounted for in VAR records. The VAR reconciliation standard is attained under this section when the actual concentration of detergent used per VAR formula record equals or exceeds the applicable LAC certified for that detergent pursuant to § 80.161(b)(3)(ix) or, if appropriate, § 80.161(d). If a given detergent package has been certified under more than one certification option pursuant to § 80.163, then a separate VAR formula record must be created for gasoline or PRC additized on the basis of each certification and its respective LAC. In such cases, the amount of the detergent used under different certification options must be accurately and separately measured, either through the use of a separate storage tank, a separate meter, or some other measurement system that is able to accurately distinguish its use. Recorded volumes of gasoline, detergent, and PRC must be expressed to the nearest gallon (or smaller units), except that detergent volumes of five gallons or less must be expressed to the nearest tenth of a gallon (or smaller units). However, if the blender's equipment cannot accurately measure to the nearest tenth of a gallon, then such volumes must be rounded downward to the next lower gallon. PRC included in the reconciliation must be identified. Each VAR formula record must also contain the following information:

(a) *Automated blending facilities.* In the case of an automated detergent blending facility, for each VAR period, for each detergent storage system and each detergent in that storage system, the following must be recorded:

(1) The manufacturer and commercial identifying name of the detergent additive package being reconciled, the LAC, and any use restriction applicable to the LAC. The LAC must be expressed in terms of gallons of detergent per thousand gallons of gasoline or PRC, and expressed to four digits. If the detergent storage system which is the subject of the VAR formula record is a proprietary system under the control of a customer, this fact must be indicated on the record.

(2) The total volume of detergent blended into gasoline and PRC, in accordance with one of the following paragraphs (a)(2)(i) or (ii) of this section, as applicable.

(i) For a facility which uses in-line meters to measure detergent usage, the total volume of detergent measured, together with supporting data which includes one of the following: the beginning and ending meter readings for each meter being measured, the metered batch volume measurements for each meter being measured, or other comparable metered measurements. The supporting data may be supplied on the VAR formula record or in the form of computer printouts or other comparable VAR supporting documentation.

(ii) For a facility which uses a gauge to measure the inventory of the detergent storage tank, the total volume of detergent shall be calculated from the following equation:

$$\text{Detergent Volume} = (A) - (B) + (C) - (D)$$

where:

A = Initial detergent inventory of the tank
B = Final detergent inventory of the tank
C = Sum of any additions to detergent inventory
D = Sum of any withdrawals from detergent inventory for purposes other than the additization of gasoline or PRC.

The value of each variable in this equation must be separately recorded on the VAR formula record. In addition, a list of each detergent addition included in variable C and a list of each detergent withdrawal included in variable D must be provided, either on the formula record or as VAR supporting documentation.

(3) The total volume of gasoline plus PRC to which detergent has been added, together with supporting data which includes one of the following: the beginning and ending meter measurements for each meter being measured, the metered batch volume measurements for each meter being measured, or other comparable metered measurements. The supporting data may be supplied on the VAR formula record or in the form of computer printouts or other comparable VAR supporting documentation. If gasoline has intentionally been overadditized in anticipation of the later addition of unadditized PRC, then the total volume of gasoline plus PRC recorded must include the expected amount of unadditized PRC to be added later. In addition, the amount of gasoline which was overadditized for this purpose must be specified.

(4) The actual detergent concentration, calculated as the total volume of detergent added (pursuant to paragraph (a)(2) of this section), divided by the total volume of gasoline plus PRC (pursuant to paragraph (a)(3) of this section). The concentration must be calculated and recorded to four digits.

(5) A list of each detergent concentration rate initially set for the detergent that is the subject of the VAR record, together with the date and description of each adjustment to any initially set concentration. The concentration adjustment information may be supplied on the VAR formula record or in the form of computer printouts or other comparable VAR supporting documentation. No concentration setting is permitted below the applicable certified LAC, except as may be modified pursuant to § 80.161(d) or as described in paragraph (a)(7) of this section.

(6) The dates of the VAR period, which shall be no longer than thirty-one days. If the VAR period is contemporaneous with a calendar month, then specifying the month will fulfill this requirement; if not, then the beginning and ending dates and times of the VAR period must be listed. The times may be supplied on the VAR formula record or in supporting documentation. Any adjustment to any detergent concentration rate more than 10 percent over the concentration rate initially set in the VAR period shall terminate that VAR period and initiate a new VAR period, except as provided in paragraph (a)(7) of this section.

(7) The concentration setting for a detergent injector may be set below the applicable LAC, or it may be adjusted more than 10 percent above the concentration initially set in the VAR period without terminating that VAR period, provided that:

(i) The purpose of the change is to correct a batch misadditization prior to the end of the VAR period and prior to the transfer of the batch to another party, or to correct an equipment malfunction; and

(ii) The concentration is immediately returned after the correction to a concentration that fulfills the requirements of paragraphs (a) (5) and (6) of this section; and

(iii) The blender creates and maintains documentation establishing the date and adjustments of the correction; and

(iv) If the correction is initiated only to rectify an equipment malfunction, and the amount of detergent used in this procedure is not added to gasoline within the compliance period, then this amount is subtracted from the detergent volume listed on the VAR formula record.

(8) If unadditized gasoline has been transferred from the facility, other than bulk transfers from refineries or pipelines to non-retail outlets or non-WPC facilities, the total amount of such gasoline must be specified.

(b) *Non-automated facilities.* In the case of a facility in which hand blending or any other non-automated method is used to blend detergent, for each detergent and for each batch of gasoline and each batch of PRC to which the detergent is being added, the following shall be recorded:

(1) The manufacturer and commercial identifying name of the detergent additive package being reconciled, the LAC, and any use restriction applicable to the LAC. The LAC must be expressed in terms of gallons of detergent per thousand gallons of gasoline or PRC, and expressed to four digits.

(2) The date of the additization that is the subject of the VAR formula record.

(3) The volume of added detergent.

(4) The volume of the gasoline and/or PRC to which the detergent has been added. If gasoline has intentionally been overadditized in anticipation of the later addition of unadditized PRC, then the total volume of gasoline plus PRC recorded must include the expected amount of unadditized PRC to be added later. In addition, the amount of gasoline which was overadditized for this purpose must be specified.

(5) The brand (if known), grade, and leaded/unleaded status of gasoline, and/or the type of PRC.

(6) The actual detergent concentration, calculated as the volume of added detergent (pursuant to paragraph (b)(3) of this section), divided by the volume of gasoline and/or PRC (pursuant to paragraph (b)(4) of this section). The concentration must be calculated and recorded to four digits.

(c) Every VAR formula record created pursuant to paragraphs (a) and (b) of this section shall contain the following:

(1) The signature of the creator of the VAR record;

(2) The date of the creation of the VAR record; and

(3) A certification of correctness by the creator of the VAR record.

(d) Electronically-generated VAR formula and supporting records.

(1) Electronically-generated records are acceptable for VAR formula records and supporting documentation (including PTDs), provided that they are complete, accessible, and easily readable. VAR formula records must also be stored with access and audit security, which must restrict to a limited number of specified people those who have the ability to alter or delete the records. In addition, parties maintaining records electronically must make available to EPA the hardware and software necessary to review the records.

(2) Electronically-generated VAR formula records may use an electronic user identification code to satisfy the signature requirements of paragraph (c)(1) of this section, provided that:

(i) The use of the ID is limited to the record creator; and

(ii) A paper record is maintained, which is signed and dated by the VAR formula record creator, acknowledging that the use of that particular user ID on a VAR formula record is equivalent to his/her signature on the document.

(e) Automated detergent blenders must calibrate their detergent equipment once in each calendar half year, with the acceptable calibrations being no less than one hundred twenty days apart. Equipment recalibration is also required each time the detergent package is changed, unless written documentation indicates that the new detergent package has the same viscosity as the previous detergent package. Detergent package change calibrations may be used to satisfy the semiannual requirement provided that the calibrations occur in the appropriate half calendar year and are no less than one hundred twenty days apart.

(f) The following VAR supporting documentation must also be created and maintained:

(1) For all automated detergent blending facilities, documentation reflecting performance of the calibrations required by paragraph (e) of this section, and any associated adjustments of the automated detergent equipment;

(2) For all hand-blending facilities which are terminals, a record specifying, for each VAR period, the total volume in gallons of transfers from the facility of unadditized base gasoline;

(3) For all detergent blending facilities, product transfer documents for all gasoline, detergent and detergent-additized PRC transferred into or out

of the facility; in addition, bills of lading, transfer, or sale for all unadditized PRC transferred into the facility;

(4) For all automated detergent blending facilities, documentation establishing the brands (if known) and grades of the gasoline which is the subject of the VAR formula record; and

(5) For all hand blending detergent blenders, the documentation, if in the party's possession, supporting the volumes of gasoline, PRC, and detergent reported on the VAR formula record.

(6) For all detergent blending facilities, documentation establishing the curing of a batch or amount of misadditized gasoline or PRC, or the curing of a use restriction on the additized gasoline or PRC, and providing at least the following information: the date of the curing procedure; the problem that was corrected; the amount, name, and LAC of the original detergent used; the amount, name, and LAC of the added curing detergent; and the actual detergent concentration attained in, and the volume of, the total cured product.

(g) Document retention and availability. All detergent blenders shall retain the documents required under this section for a period of five years from the date the VAR formula records and supporting documentation are created, and shall deliver them upon request to the EPA Administrator or the Administrator's authorized representative.

(1) Except as provided in paragraph (g)(3) of this section, automated detergent blender facilities and hand-blender facilities which are terminals, which physically blend detergent into gasoline, must make immediately available to EPA, upon request, the preceding twelve months of VAR formula records plus the preceding two months of VAR supporting documentation.

(2) Except as provided in paragraph (g)(3) of this section, other hand-blending detergent facilities which physically blend detergent into gasoline must make immediately available to EPA, upon request, the preceding two months of VAR formula records and VAR supporting documentation.

(3) Facilities which have centrally maintained records at other locations, or have customers who maintain their own records at other locations for their proprietary detergent systems, and which can document this fact to the Agency, may have until the start of the next business day after the EPA request to supply VAR supporting documentation, or longer if approved by the Agency.

(4) In this paragraph (g) of this section, the term *immediately available* means that the records must be provided, electronically or otherwise, within approximately one hour of EPA's request, or within a longer time frame as approved by EPA.

[61 FR 35377, July 5, 1996]

§ 80.171 Product transfer documents (PTDs).

(a) *Contents.* For each occasion when any gasoline refiner, importer, reseller, distributor, carrier, retailer, wholesale purchaser-consumer, oxygenate blender, detergent manufacturer, distributor, carrier, or blender, transfers custody or title to any gasoline, detergent, or detergent-additized PRC other than when detergent-additized gasoline is sold or dispensed at a retail outlet or wholesale purchaser-consumer facility to the ultimate consumer, the transferor shall provide to the transferee, and the transferee shall acquire from the transferor, documents which accurately include the following information:

(1) The name and address of the transferee and transferor; the address requirement may be fulfilled, in the alternative, through separate documentation which establishes said addresses and is maintained by the parties and made available to EPA for the same length of time as required for the PTDs, provided that the normal business procedure of these parties is not to identify addresses on PTDs.

(2) The date of the transfer.

(3) The volume of product transferred.

(4)(i) The identity of the product being transferred (*i.e.*, its identity as base gasoline, detergent, detergent-additized gasoline, or specified detergent-additized oxygenate or detergent-additized gasoline blending stock that comprises a detergent-additized PRC). PTDs for detergent-additized gasoline or PRC are not required to identify the

particular detergent used to additize the product.

(ii) If the product being transferred consists of two or more different types of product subject to this regulation, *i.e.*, base gasoline, detergent-additized gasoline, or specified detergent-additized PRC, component, then the PTD for the commingled product must identify each such type of component contained in the commingled product.

(5) If the product being transferred is base gasoline, then in addition to the base gasoline identification, the following warning must be stated on the PTD: ''Not for sale to the ultimate consumer''. If, pursuant to § 80.173(a), the product being transferred is exempt base gasoline to be used for research, development, or test purposes only, the following warning must also be stated on the PTD: ''For use in research, development, and test programs only''.

(6) The name of the detergent additive as reported in its registration must be used to identify the detergent package on its PTD.

(7) If the product being transferred is leaded gasoline, then the PTD must disclose that the product contains lead and/or phosphorous, as applicable.

(8) If the product being transferred is gasoline or PRC that has been additized with detergent under a PADD-specific or CARB-based certification, or under a certification option which creates an oxygenate or PRC use restriction, then the PTD for the additized product must identify the applicable use restriction. The PTD for commingled additized gasolines or PRCs containing such restrictions must indicate the applicable restriction(s) from each component.

(9) If the product being transferred is detergent-additized gasoline or PRC that has been overadditized in anticipation of the later (or earlier) addition of PRC, then the PTD must include a statement that the product has been overadditized to account for a specified volume in gallons, or a specified percentage of the product's total volume, of additional, specified PRC.

(10) If a detergent package has been certified under only one certification option, and that option places a use restriction on the respective LAC, then the PTD must identify the detergent as use-restricted; the PTD for a detergent package certified with more than one LAC must identify that the detergent has special use options available.

(11) Base gasoline designated for fuel-specific certification.

(i) The PTD for segregated base gasoline intended for additization with a specific fuel-specific detergent pursuant to § 80.163(c) must indicate that it is for use with the designated, fuel-specific detergent.

(ii) A PTD for base gasoline may not indicate that the product is for use with a designated, fuel-specific detergent, unless the entire quantity of base gasoline is from the segregated fuel supply specified in the detergent's certification and the gasoline contains only those oxygenates or PRCs, if any, specified and approved in the detergent's certification.

(iii) If, pursuant to § 80.163(c)(3), the fuel-specific certification for the segregated pool of gasoline has established that no detergent additives are necessary for such gasoline to comply with this subpart, then the PTD must identify this gasoline as detergent-equivalent gasoline.

(b) *Use of product codes and other non-regulatory language.* (1) Product codes and other non-regulatory language may not be used as a substitute for the specified PTD warning language specified in paragraph (a)(6) of this section for base gasoline, except that:

(i) The specified warning language may be omitted for bulk transfers of base gasoline from a refinery to a pipeline if there is a prior written agreement between the parties specifying that all such gasoline is unadditized and will not be transferred to the ultimate consumer;

(ii) Product codes may be used as a substitute for the specified warning language provided that the PTD is an electronic data interchange (EDI) document being used solely for the transfer of title to the base gasoline, and provided that the product codes otherwise comply with the requirements of this section.

(2) Product codes and other non-regulatory language may not be used in place of the PTD language specified in paragraph (a)(11) of this section regarding detergent package use restrictions.

(3) Product codes and other language not specified in this section may otherwise be used to comply with PTD information requirements, provided that they are clear, accurate, and not misleading.

(4) If product codes are used, they must be standardized throughout the distribution system in which they are used, and downstream parties must be informed of their full meaning.

(c) *PTD exemption for small transfers of additized gasoline.* Transfers of additized gasoline are exempt from the PTD requirements of this section provided all the following conditions are satisfied:

(1) The product is being transferred by a distributor who is not the product's detergent blender; and

(2) The recipient is a wholesale purchaser-consumer (WPC) or other ultimate consumer of gasoline, for its own use only or for that of its agents or employees; and

(3) The volume of additized gasoline being transferred is no greater than 550 gallons.

(d) *Recordkeeping Period.* Any person creating, providing or acquiring product transfer documentation for gasoline, detergent, or detergent-additized PRC shall retain the documents required by this section for a period of five years from the date the product transfer documentation was created, received or transferred, as applicable, and shall deliver such documents to EPA upon request. WPCs are not required to retain PTDs of additized gasoline received by them.

[61 FR 35379, July 5, 1996, as amended at 62 FR 60001, Nov. 6, 1997]

§ 80.172 Penalties.

(a) *General.* Any person who violates any prohibition or affirmative requirement of § 80.168 shall be liable to the United States for a civil penalty of not more than the sum of $25,000 for every day of such violation and the amount of economic benefit or savings resulting from the violation.

(b) *Gasoline non-conformity.* Any violation of § 80.168(a) shall constitute a separate day of violation for each and every day the gasoline in violation remains at any place in the gasoline distribution system, beginning on the day that the gasoline is in violation of the respective prohibition and ending on the last day that such gasoline is offered for sale or is dispensed to any ultimate consumer.

(c) *Detergent non-conformity.* Any violation of § 80.168(d) shall constitute a separate day of violation for each and every day the detergent in violation remains at any place in the gasoline or detergent distribution system, beginning on the day that the detergent is in violation of the prohibition and ending on the last day that detergent-additized gasoline, containing the subject detergent as a component thereof, is offered for sale or is dispensed to any ultimate consumer.

(d) *Post-refinery component non-conformity.* Any violation of § 80.168(e) shall constitute a separate day of violation for each and every day the PRC in violation remains at any place in the PRC or gasoline distribution system, beginning on the day that the PRC is in violation of the respective prohibition and ending on the last day that detergent-additized gasoline containing the PRC is offered for sale or is dispensed to any ultimate consumer.

(e) *Product transfer document non-conformity.* Any violation of § 80.168(c) shall constitute a separate day of violation for every day the PTD is not fully in compliance. This is to begin on the day that the PTD is created or should have been created and to end at the later of the following dates:

(1) The day that the document is corrected and comes into compliance; or

(2) The day that gasoline not additized in conformity with detergent certification program requirements, as a result of the PTD non-conformity, is offered for sale or is dispensed to the ultimate consumer.

(f) *Volumetric additive reconciliation recordkeeping non-conformity.* Any VAR recordkeeping violation of § 80.168(b) shall constitute a separate day of violation for every day that VAR recordkeeping is not fully in compliance. Each element of the VAR record keeping program that is not in compliance shall constitute a separate violation for purposes of this section.

(g) *Volumetric additive reconciliation compliance standard non-conformity.* Any

violation of the VAR compliance standard established in § 80.170 shall constitute a separate day of violation for each and every day of the VAR compliance period in which the standard was violated.

(h) *Volumetric additive reconciliation equipment calibration non-conformity.* Any VAR equipment calibration violation of § 80.168(b) shall constitute a separate day of violation for every day a VAR equipment calibration requirement is not met.

[61 FR 35380, July 5, 1996, as amended at 61 FR 58747, Nov. 18, 1996]

§ 80.173 Exemptions.

(a) *Research, development, and testing exemptions.* Any detergent that is either in a research, development, or test status, or is sold to petroleum, automobile, engine, or component manufacturers for research, development, or test purposes, or any gasoline to be used by, or under the control of, petroleum, additive, automobile, engine, or component manufacturers for research, development, or test purposes, is exempted from the provisions of the detergent certification program, provided that:

(1) The detergent (or fuel containing the detergent), or the gasoline, is kept segregated from non-exempt product, and the party possessing the product maintains documentation identifying the product as research, development, or testing detergent or fuel, as applicable, and stating that it is to be used only for research, development, or testing purposes; and

(2) The detergent (or fuel containing the detergent), or the gasoline, is not sold, dispensed, or transferred, or offered for sale, dispensing, or transfer, from a retail outlet. It shall also not be sold, dispensed, or transferred or offered for sale, dispensing, or transfer from a wholesale purchaser-consumer facility, unless such facility is associated with detergent, fuel, automotive, or engine research, development or testing; and

(3) The party using the product for research, development, or testing purposes, or the party sponsoring this usage, notifies the EPA, on at least an annual basis and prior to the use of the product, of the purpose(s) of the program(s) in which the product will be used and the anticipated volume of the product to be used. The information must be submitted to the address or fax number specified in § 80.174(c).

(b) *Racing fuel and aviation fuel exemptions.* Any fuel that is refined, sold, dispensed, transferred, or offered for sale, dispensing, or transfer as automotive racing fuel or as aircraft engine fuel, is exempted from the provisions of this subpart, provided that:

(1) The fuel is kept segregated from non-exempt fuel, and the party possessing the fuel for the purposes of refining, selling, dispensing, transferring, or offering for sale, dispensing, or transfer as automotive racing fuel or as aircraft engine fuel, maintains documentation identifying the product as racing fuel, restricted for non-highway use in racing motor vehicles, or as aviation fuel, restricted for use in aircraft, as applicable;

(2) Each pump stand at a regulated party's facility, from which such fuel is dispensed, is labeled with the applicable fuel identification and use restrictions described in paragraph (b)(1) of this section; and

(3) The fuel is not sold, dispensed, transferred, or offered for sale, dispensing, or transfer for highway use in a motor vehicle.

(c) *California gasoline exemptions.* (1) Gasoline or PRC which is additized in the State of California is exempt from the VAR provisions in §§ 80.168 (b) and (e) and 80.170, provided that:

(i) For all such gasoline or PRC, whether intended for sale within or outside of California, records of the type required for California gasoline (specified in title 13, California Code of Regulations, section 2257) are maintained; and

(ii) Such records, with the exception of daily additization records, are maintained for a period of five years from the date they were created and are delivered to EPA upon request.

(2) Gasoline or PRC that is transferred and/or sold solely within the State of California is exempt from the PTD provisions of the detergent certification program, specified in §§ 80.168(c) and 80.171.

(3) Nothing in this paragraph (c) exempts such gasoline or PRC from the

requirements of § 80.168 (a) and (e), as applicable. EPA will base its determination of California gasoline's conformity with the detergent's LAC on the additization records required by CARB, or records of the same type.

[61 FR 35380, July 5, 1996]

§ 80.174 Addresses.

(a) The detergent additive sample required under § 80.161(b)(2) shall be sent to: Manager, Fuels and Technical Analysis Group, Testing Services Division, U.S. Environmental Protection Agency, National Vehicle and Fuel Emissions Laboratory, 2565 Plymouth Road, Ann Arbor, Michigan 48105.

(b) Other detergent registration and certification data, and certain other information which may be specified in this subpart, shall be sent to: Detergent Additive Certification, Director, Fuels and Energy Division, U.S. Environmental Protection Agency (6406J), 1200 Pennsylvania Ave., NW., Washington, DC 20460.

(c) Notifications to EPA regarding program exemptions, detergent dilution and commingling, and certain other information which may be specified in this subpart, shall be sent to: Detergent Enforcement Program, U.S. Environmental Protection Agency, Suite 214, 12345 West Alameda Parkway, Denver, CO 80228, (FAX 303–969–6490).

[61 FR 35381, July 5, 1996]

Subpart H—Gasoline Sulfur

SOURCE: 65 FR 6823, Feb. 10, 2000, unless otherwise noted.

GENERAL INFORMATION

§§ 80.180–80.185 [Reserved]

§ 80.190 Who must register with EPA under the sulfur program?

(a) Refiners and importers who are registered by EPA under § 80.76 are deemed to be registered for purposes of this subpart.

(b) Refiners and importers subject to the standards in § 80.195 who are not registered by EPA under § 80.76 must provide to EPA the information required by § 80.76 by November 1, 2003, or not later than three months in advance of the first date that such person produces or imports gasoline, whichever is later.

(c) Refiners with any refinery subject to the small refiner standards under § 80.240, or refiners subject to the geographic phase-in area (GPA) standards under § 80.216, who are not registered by EPA under § 80.76 must provide to EPA the information required under § 80.76 by December 31, 2000.

(d) Any refiner who plans to generate credits or allotments under § 80.305 or § 80.275 in any year prior to 2004 who is not registered by EPA under § 80.76 must register under § 80.76 no later than September 30 of the year prior to the first year of credit generation. Any refiner who plans to generate credits in 2000 who is not registered by EPA under § 80.76 must register under § 80.76 no later than May 10, 2000.

GASOLINE SULFUR STANDARDS

§ 80.195 What are the gasoline sulfur standards for refiners and importers?

(a)(1) The gasoline sulfur standards for refiners and importers, excluding gasoline produced by small refiners subject to the standards at § 80.240, and gasoline designated as GPA gasoline under § 80.219(a), are as follows:

	Gasoline sulfur standards for the averaging period beginning:		
	January 1, 2004	January 1, 2005	January 1, 2006 and subsequent
Refinery or Importer Average	[1]	30.00	30.00
Corporate Pool Average	120.00	90.00	[1]
Per-Gallon Cap	300	300	80

[1] Not applicable.

(2) The sulfur standards and all compliance calculations for sulfur under this subpart are in parts per million (ppm) and volumes are in gallons.

(3) The averaging period is January 1 through December 31 of each year.

(4) The standards under this paragraph (a) for all imported gasoline shall be met by the importer.

(b)(1) The refinery or importer annual average gasoline sulfur standard is the maximum average sulfur level

allowed for gasoline produced at a refinery or imported by an importer during each calendar year starting January 1, 2005.

(2) The annual average sulfur level is calculated in accordance with § 80.205.

(3) The refinery or importer annual average gasoline sulfur standard may be met using credits as provided under § 80.275 or § 80.315.

(4) In 2005 only, the refinery or importer annual average sulfur standard may be met using allotments or credits as provided under § 80.275, or credits as provided under § 80.315. The same allotments used to demonstrate compliance with the corporate pool average standard may be used by a refinery in the corporate pool toward a demonstration of compliance with the refinery average standard, or by an importer for demonstration of compliance with the importer average standard. Alternatively, some of the allotments may be used toward a demonstration of compliance with the refinery average standard by one refinery in the corporate pool and the remainder used by another refinery or refineries in the corporate pool.

(c)(1) The corporate pool average gasoline sulfur standards applicable in 2004 and 2005 are the maximum average sulfur levels allowed for a refiner's or importer's gasoline production from all of the refiner's refineries or all gasoline imported by an importer in a calendar year. The corporate pool average standards for a party that is both a refiner and an importer are the maximum average sulfur levels allowed for all the party's combined gasoline production from all refineries and imported gasoline in a calendar year.

(2) The corporate pool average is calculated in accordance with the provisions of § 80.205.

(3) The corporate pool average standard may be met using sulfur allotments under § 80.275.

(4) The corporate pool average standards do not apply to approved small refiners subject to the gasoline sulfur standards under § 80.240.

(5)(i) Joint ventures, in which two or more parties collectively own and operate one or more refineries, will be treated as a separate refiner under this section.

(ii) One partner to a joint venture may include one or more joint venture refineries in its corporate pool for purposes of complying with the corporate pool average standards. The joint venture will be in compliance for such joint venture refinery(ies) if the partner's corporate pool average meets the corporate pool average standards. The joint venture entity must demonstrate compliance with the corporate pool average standards for any refinery(ies) owned by the joint venture that are not included in one partner's corporate pool.

(iii) In the case of a refinery that is owned by a two or more parties that is not a joint venture under this paragraph (c)(5), the business entity consisting of the joint owners is the refiner of that refinery. One of the owners of such a refinery may include the refinery in its corporate pool for purposes of complying with the corporate pool average standards under this section, with the same requirements and limitations that apply under paragraph (c)(5)(ii) of this section.

(6)(i) A parent company is the refiner of any refinery facilities owned by the parent company's wholly-owned subsidiaries for purposes of compliance with the corporate pool average standards under this section.

(ii) A parent company must include in its corporate pool all of the gasoline produced at any refineries owned by the parent company and any refineries owned by the parent company's wholly-owned subsidiaries; or

(iii) A parent company may be deemed in compliance with the corporate pool average standards if the parent company includes in its corporate pool the gasoline produced by any refineries owned by the parent company, and each wholly-owned subsidiary of the parent company individually complies with the corporate pool average standards for the gasoline produced at the refineries owned by the wholly-owned subsidiary.

(d)(1) The per-gallon cap standard is the maximum sulfur level allowed for each batch of gasoline produced or imported starting January 1, 2004.

(2) In 2004 only, a refiner or importer may produce or import gasoline with a per-gallon sulfur content greater than

300 ppm, to a maximum of 350 ppm, provided the following conditions are met:

(i) The refinery or importer becomes subject to an adjusted per-gallon cap standard in 2005, calculated using the following formula:

$$ACS=300-(S_{max}-300)$$

Where:

ACS=Adjusted cap standard.

S_{max}=Maximum sulfur content of any gasoline produced at a refinery or imported by an importer during 2004.

(ii) The adjusted cap standard calculated under paragraph (d)(2)(i) of this section applies to all gasoline produced at a refinery or imported by an importer during 2005.

(iii) The refinery or importer remains subject to the 30.00 average standard under paragraph (a) of this section for 2005.

(iv) The provisions of this paragraph (d)(2) apply to gasoline designated as GPA gasoline under § 80.219(a).

(v) The provisions of this paragraph (d)(2) do not apply to small refiners as defined in § 80.225.

[65 FR 6823, Feb. 10, 2000; 65 FR 10598, Feb. 28, 2000, as amended at 67 FR 40181, June 12, 2002]

§ 80.200 What gasoline is subject to the sulfur standards and requirements?

For the purpose of this subpart, all reformulated and conventional gasoline and RBOB, collectively called ''gasoline'' unless otherwise specified, is subject to the standards and requirements under this subpart, with the following exceptions:

(a) Gasoline that is used to fuel aircraft, racing vehicles or racing boats that are used only in sanctioned racing events, provided that:

(1) Product transfer documents associated with such gasoline, and any pump stand from which such gasoline is dispensed, identify the gasoline either as gasoline that is restricted for use in aircraft, or as gasoline that is restricted for use in racing motor vehicles or racing boats that are used only in sanctioned racing events;

(2) The gasoline is completely segregated from all other gasoline throughout production, distribution and sale to the ultimate consumer; and

(3) The gasoline is not made available for use as motor vehicle gasoline, or dispensed for use in motor vehicles, except for motor vehicles used only in sanctioned racing events.

(b) California gasoline as defined in § 80.375.

(c) Gasoline that is exported for sale outside the U.S.

§ 80.205 How is the annual refinery or importer average and corporate pool average sulfur level determined?

(a) The annual refinery or importer average and corporate pool average gasoline sulfur level is calculated as follows:

$$S_a = \frac{\sum_{i=1}^{n}(V_i \times S_i)}{\sum_{i=1}^{n} V_i}$$

Where:

S_a = The refinery or importer annual average sulfur level, or corporate pool average level, as applicable.

V_i=The volume of gasoline produced or imported in batch i.

S_i=The sulfur content of batch i determined under § 80.330.

n=The number of batches of gasoline produced or imported during the averaging period.

i=Individual batch of gasoline produced or imported during the averaging period.

(b) All annual refinery or importer average or corporate pool average calculations shall be conducted to two decimal places.

(c) A refiner or importer may include oxygenate added downstream from the refinery or import facility when calculating the sulfur content, provided the following requirements are met:

(1) For oxygenate added to conventional gasoline, the refiner or importer must comply with the requirements of § 80.101(d)(4)(ii).

(2) For oxygenate added to RBOB, the refiner or importer must comply with the requirements of § 80.69(a).

(d) Refiners and importers must exclude from compliance calculations all of the following:

(1) Gasoline that was not produced at the refinery;

(2) In the case of an importer, gasoline that was imported as Certified Sulfur-FRGAS;

(3) Blending stocks transferred to others;

(4) Gasoline that has been included in the compliance calculations for another refinery or importer; and

(5) Gasoline exempted from standards under § 80.200.

(e)(1) A refiner or importer may exceed the refinery or importer annual average sulfur standard specified in § 80.195 for a given averaging period for any calendar year through 2010, creating a compliance deficit, provided that in the calendar year following the year the standard is not met, the refinery or importer shall:

(i) Achieve compliance with the refinery or importer annual average sulfur standard specified in § 80.195; and

(ii) Use additional sulfur credits sufficient to offset the compliance deficit of the previous year.

(2) No refiner or importer may have a compliance deficit in any year after 2010. Any deficit that exists in 2010 must be made up in 2011.

[65 FR 6823, Feb. 10, 2000, as amended at 67 FR 40182, June 12, 2002]

§ 80.210 What sulfur standards apply to gasoline downstream from refineries and importers?

The sulfur standard for gasoline at any point in the gasoline distribution system downstream from refineries and import facilities, including gasoline at facilities of distributors, carriers, oxygenate blenders, retailers and wholesale purchaser-consumers (''downstream location''), shall be determined in accordance with the provisions of this section.

(a) *Definition. S-RGAS* means gasoline that is subject to the standards under § 80.240 or § 80.270, including Certified Sulfur-FRGAS as defined in § 80.410, except that no batch of gasoline may be classified as S-RGAS if the actual sulfur content is less than the applicable per-gallon refinery cap standard specified in § 80.195.

(b) *Standards for gasoline that does not qualify for S-RGAS downstream standards.* The following standards apply to any gasoline that does not qualify for S-RGAS downstream standards under in paragraph (d) of this section:

(1) Starting February 1, 2004 the sulfur content of gasoline at any downstream location other than at a retail outlet or wholesale purchaser-consumer facility, and starting March 1, 2004 the sulfur content of gasoline at any downstream location, shall not exceed 378 ppm.

(2) Except as provided in § 80.220(a), starting February 1, 2005 the sulfur content of gasoline at any downstream location other than at a retail outlet or wholesale purchaser-consumer facility, and starting March 1, 2005 the sulfur content of gasoline at any downstream location, shall not exceed 326 ppm.

(3) Except as provided in § 80.220(a), starting February 1, 2006 the sulfur content of gasoline at any downstream location other than at a retail outlet or wholesale purchaser-consumer facility, and starting March 1, 2006 the sulfur content of gasoline at any downstream location, shall not exceed 95 ppm.

(c) *Standards for gasoline that qualifies for S-RGAS downstream standards.* In the case of any gasoline that qualifies for S-RGAS downstream standards under paragraph (d) of this section, the sulfur standard shall be the downstream standard for the gasoline calculated under paragraph (f) of this section. In the case of mixtures of gasoline that qualify for different S-RGAS downstream standards, the sulfur standard shall be the highest downstream standard applicable to any of the S-RGAS in the mixture.

(d) *Gasoline that qualifies for S-RGAS downstream standards.* Gasoline qualifies for S-RGAS downstream standards if all of the following conditions are met:

(1) The gasoline must be comprised in whole or part of S-RGAS.

(2) Product transfer documents applicable to the gasoline when received at that location must represent that the gasoline contains S-RGAS.

(3) Except as provided in paragraph (d)(4) of this section, the gasoline must have been sampled and tested at that location subsequent to the most recent receipt of gasoline at that location, and the test result must show a sulfur content greater than:

(i) 350 ppm starting February 1, 2004;

(ii) 300 ppm starting February 1, 2005; and

(iii) 80 ppm (or in the GPA, 300 ppm) starting February 1, 2006.

(4) This sampling and testing condition does not apply for gasoline at any retail outlet, wholesale purchaser-consumer facility, or contained in any transport truck.

(e) *Product transfer document information for S-RGAS.* (1) On each occasion when any refiner or importer of S-RGAS transfers custody or title to such gasoline, the refiner or importer shall provide to the transferee documents that include the following information:

(i) Identification of the gasoline as being S-RGAS; and

(ii) The downstream standard applicable to the batch of gasoline under paragraph (f) of this section.

(2) Where gasoline in whole or part is classified as S-RGAS when received by the transferor, and where the gasoline transferred meets the conditions under paragraph (d) of this section, the transferor shall provide to the transferee, on each occasion when custody or title to gasoline is transferred, documents that include the following information:

(i) Identification of the gasoline as S-RGAS; and

(ii) The applicable downstream standard under paragraph (c) of this section. This does not apply when gasoline is sold or dispensed for use in motor vehicles at a retail outlet or wholesale purchaser-consumer facility.

(3) No person shall classify gasoline as being S-RGAS except as provided in paragraphs (e)(1) and (e)(2) of this section.

(4) Product codes may be used to convey the information required by paragraphs (e)(1) and (e)(2) of this section if such codes are clearly understood by each transferee.

(5) Gasoline from a terminal tank containing S-RGAS that is combined with gasoline from a terminal tank containing non-S-RGAS for the purpose of blending mid-grade gasoline in a transport truck may be classified on product transfer documents as S-RGAS, provided that the S-RGAS was combined with non-S-RGAS for the sole purpose of producing midgrade gasoline.

(6) Where S-RGAS is being delivered into a terminal storage tank containing non-S-RGAS which is simultaneously supplying gasoline to a transport truck, the terminal may identify the gasoline as S-RGAS before the delivery into the terminal tank is complete without performing the tests required in paragraph (d)(3) of this section. Upon completion of the delivery of S-RGAS into the terminal tank, the terminal may classify the gasoline as S-RGAS only if it meets the criteria for S-RGAS following testing in accordance with the requirements of paragraph (d)(3) of this section.

(7) The information relating to S-RGAS required to be included in product transfer documentation under this paragraph (e) must be included in the product transfer documents which accompany the transfer of custody of the gasoline. Product transfer documents that transfer title of the gasoline may fulfill the requirements under this paragraph (e) by indicating that the required information relating to S-RGAS is contained in the product transfer documents which accompany the transfer of custody of the gasoline.

(f) *Downstream standards applicable to S-RGAS when produced or imported.* (1) The downstream standard applicable to any gasoline classified as S-RGAS when produced or imported shall be calculated using the following equation:

$$D=S+105\times((S+2)/10^{4})^{0.4}$$

Where:

D=Downstream sulfur standard.

S=The sulfur content of the refiner's batch determined under § 80.330.

(2) Where more than one S-RGAS batch is combined, prior to shipment, at the refinery or import facility where the S-RGAS is produced or imported, the downstream standard applicable to the mixture shall be the highest downstream standard, calculated under paragraph (f)(1) of this section, for any S-RGAS contained in the mixture.

[65 FR 6823, Feb. 10, 2000, as amended at 67 FR 40182, June 12, 2002]

§ 80.211 What are the requirements for treating imported gasoline as blendstock?

An importer may treat imported gasoline (as defined in § 80.2(c)) as gasoline treated as blendstock, or GTAB, under

the provisions of § 80.83 for purposes of compliance with this subpart H.

[70 FR 74578, Dec. 15, 2005]

§ 80.212 What requirements apply to oxygenate blenders?

Effective January 1, 2004, oxygenate blenders who blend oxygenate into gasoline downstream of the refinery that produced the gasoline or the import facility where the gasoline was imported, are not subject to the requirements of this subpart applicable to refiners for this gasoline, but are subject to the requirements and prohibitions applicable to downstream parties and the prohibition specified in § 80.385(e).

§ 80.213 What alternative sulfur standards and requirements apply to transmix processors and transmix blenders?

Transmix processors and transmix blenders, as defined in § 80.84(a), may comply with the following requirements instead of the requirements and standards otherwise applicable to a refiner under subpart H of this part.

(a) Any transmix processor who recovers transmix gasoline product (TGP), as defined in § 80.84(a), from transmix through transmix processing under § 80.84(c) must show through sampling and testing, using the methods in § 80.330, that the TGP meets the applicable sulfur standards under § 80.210 or § 80.220, prior to the TGP leaving the transmix processing facility.

(1) The applicable sulfur standard is the standard in § 80.210(b); or

(2) If the TGP sulfur is greater than the standard in § 80.210(b), and the transmix processor has product transfer documents that prove the TGP was originally produced by a small refiner, hardship refiner, or for use in the GPA, the applicable sulfur standard for the TGP is the downstream sulfur standard corresponding to the original gasoline.

(b) The sampling and testing required under paragraph (a) of this section shall be conducted following each occasion TGP is produced.

(c) Any transmix processor who produces gasoline by adding blendstock to TGP must, for such blendstock, comply with all requirements and standards that apply to a refiner under subpart H of this part, and must meet the applicable downstream sulfur standards under § 80.210 or § 80.220 for the gasoline produced by blending blendstock and TGP, prior to the gasoline leaving the transmix processing facility.

(d) Any transmix processor who produces gasoline by blending blendstock into TGP may meet the sampling and testing requirements of subpart H of this part as follows:

(1)(i) Sample and test the blendstock when received at the transmix processing facility, using the methods specified in § 80.330, to determine the volume and sulfur content, and treat each volume of blendstock that is blended into a volume of TGP as a separate batch for purposes of calculating and reporting compliance with the applicable annual average and per-gallon cap sulfur standards in § 80.195 or § 80.216, as applicable; or

(ii) Use sulfur test results of the blendstock supplier provided that the following requirements are met:

(A) Sampling and testing by the blendstock supplier is performed using the methods specified in § 80.330;

(B) Testing for the sulfur content of the blendstock in the supplier's storage tank must be conducted subsequent to the last receipt of blendstock into the supplier's storage tank from which the transmix processor is supplied;

(C) The transmix processor must obtain a copy of the blendstock supplier's test results, at the time of each transfer of blendstock to the transmix processor, that reflect the sulfur content of each load of blendstock supplied to the transmix processor;

(D) The transmix processor must conduct a quality assurance program of sampling and testing for each blendstock supplier. The frequency of blendstock sampling and testing must be one sample for every 500,000 gallons of blendstock received or one sample every 3 months, whichever results in more frequent sampling; and

(E) If any of the requirements of this paragraph (d)(1)(ii) are not met, in whole or in part, for any blendstock blended into TGP, that blendstock is deemed in violation of the gasoline sulfur standards in § 80.195.

(2) Sample and test each batch of gasoline produced by blending blendstock

into TGP, using the methods specified in § 80.330, to determine the sulfur content of the batch.

(3) The sulfur content of each batch of gasoline produced by blending blendstock into TGP must be no greater than the downstream sulfur standard under § 80.210 or § 80.220 applicable to the designation of the TGP; and

(4) Gasoline produced by blending blendstock into TGP must be properly identified on product transfer documents in accordance with the provisions of § 80.210 or § 80.220, as applicable.

(e) Any transmix blender who produces gasoline by blending transmix, or mixtures of gasoline and distillate fuel described in § 80.84(e), into previously certified gasoline under § 80.84(d) must meet the applicable downstream sulfur standards under § 80.210 or § 80.220 for the gasoline produced by blending transmix and previously certified gasoline.

(f) Any transmix processor or transmix blender who adds feedstocks to their transmix other than gasoline, distillate fuel, or gasoline blendstocks from pipeline interface must meet all requirements and standards that apply to a refiner under subpart H of this part, other than § 80.213, for all gasoline they produce during a compliance period.

[71 FR 31963, June 2, 2006]

§ 80.214 [Reserved]

GEOGRAPHIC PHASE-IN PROGRAM

§ 80.215 What is the scope of the geographic phase-in program?

(a) *Geographic phase-in area.* (1) The following states comprise the geographic phase-in area (GPA) subject to the provisions of the geographic phase-in program: North Dakota, Montana, Idaho, Wyoming, Utah, Colorado, New Mexico, and Alaska.

(2) In addition, the following counties within the states identified in paragraph (a)(2)(i) of this section and the following Federal Indian reservations in paragraph (a)(2)(ii) of this section are included in the GPA:

(i) The list of counties follows:

Arizona

Apache
Coconino
Gila
Greenlee
Navajo

Nebraska

Banner
Box Butte
Cheyenne
Dawes
Deuel
Garden
Keith
Kimball
Morrill
Scotts Bluff
Sheridan
Sioux

Nevada

Elko
Eureka
Humboldt
Lander
Lincoln
White Pine

Oregon

Baker
Crook
Gilliam
Grant
Harney
Malheur
Morrow
Sherman
Umatilla
Union
Wallowa
Wheeler

South Dakota

Bennett
Butte
Corson
Custer
Dewey
Fall River
Haakon
Harding
Jackson
Jones
Lawrence
Meade
Mellette
Pennington
Perkins
Shannon

Stanley
Todd
Ziebach

Washington

Adams
Asotin
Benton
Chelan
Columbia
Douglas
Ferry
Franklin
Garfield
Grant
Kittitas
Klickitat
Lincoln
Okanogan
Pend Oreille
Spokane
Stevens
Walla Walla
Whitman
Yakima

(ii) The list of Federal Indian reservations follows: Burns Paiute, Cheyenne River, Colville, Duck Valley, Ely Colony, Fort Apache, Fort McDermitt, Goshute, Haulapai, Havasupai, Hopi, Kalispel, Navajo, Pine Ridge, Rosebud, Yakama, San Carlos, Spokane, Standing Rock, Summit Lake, Te-Moak, Umatilla, Winnemucca.

(3) Contiguous tribal reservations of a particular tribe are included in the GPA if a portion of the tribal reservation is within the GPA state or county.

(4) Any dispensing facility located partially within a GPA county or tribal reservation land shall be considered fully within the GPA for purposes of this program.

(b) *Duration of the program.* (1) The geographic phase-in program applies to the 2004, 2005, and 2006 annual averaging periods, except as provided in paragraph (b)(2) of this section.

(2) Subject to the provisions of § 80.540, the geographic phase-in program shall also apply to the 2007 and 2008 annual averaging period for refiners approved for GPA standards in 2007 and 2008 under § 80.540.

(c) *Persons eligible.* Any refiner or importer who produces or imports gasoline for use in the geographic area under paragraph (a) of this section is eligible to apply for the geographic phase-in program. The provisions of the geographic phase-in program shall apply to imported gasoline through the importer.

[65 FR 6823, Feb. 10, 2000, as amended at 66 FR 5136, Jan. 18, 2001; 66 FR 19306, Apr. 13, 2001; 70 FR 70509, Nov. 22, 2005]

§ 80.216 What standards apply to gasoline produced or imported for use in the GPA?

(a) The refinery or importer annual average sulfur standard for gasoline produced or imported for use in the geographic phase-in area under § 80.215, and designated as GPA gasoline under § 80.219(a), shall be 150.00 ppm.

(b) The per-gallon cap standard for gasoline produced or imported for use in the GPA under paragraph (a) of this section shall be 300 ppm, except as specified in § 80.195(d).

(c) The refinery or importer annual average sulfur level is calculated in accordance with the provisions of § 80.205.

(d) The refinery or importer annual average standard under paragraph (a) of this section may be met using sulfur allotments or credits as provided under §§ 80.275 and 80.315.

(e) Gasoline produced by approved small refiners subject to the standards under § 80.240 is not subject to the standards under paragraphs (a) and (b) of this section.

(f)(1) A refiner or importer whose gasoline production or volume of imported gasoline in 2004 or 2005 is comprised of more than 50 percent of gasoline designated as GPA gasoline under § 80.219(a) shall not be required to meet the corporate pool average standards under § 80.195 for its gasoline production or imported gasoline during the applicable averaging period.

(2) A refiner or importer whose gasoline production or volume of imported gasoline in 2004 or 2005 is comprised of less than 50 percent of gasoline designated as GPA gasoline under § 80.219(a) must meet the corporate pool average standards under § 80.195 for all the refiner's gasoline production or the importer's volume of imported gasoline, including GPA gasoline, during the applicable averaging period.

(g) The provisions for compliance deficits under § 80.205(e) do not apply to

gasoline subject to the standards under paragraphs (a) and (b) of this section.

[65 FR 6823, Feb. 10, 2000, as amended at 66 FR 19306, Apr. 13, 2001; 67 FR 40182, June 12, 2002]

§ 80.217 How does a refiner or importer apply for the GPA standards?

(a) To apply for the GPA standards under § 80.216, a refiner or importer must submit an application in accordance with the provisions of § 80.290.

(b) Applications under paragraph (a) of this section must be submitted by May 1, 2001.

(c)(1) If approved, EPA will notify the refiner or importer of each refinery's or the importer's annual average sulfur standard for gasoline produced for use in the GPA for the 2004 through 2006 annual averaging periods.

(2) If disapproved, the refiner or importer must comply with the standards in § 80.195 for gasoline produced for use in the GPA.

(d) If EPA finds that a refiner or importer provided false or inaccurate information on its application under this section, upon notice from EPA, the refiner's or importer's application will be void *ab initio*.

[65 FR 6823, Feb. 10, 2000, as amended at 66 FR 19306, Apr. 13, 2001]

§ 80.218 [Reserved]

§ 80.219 Designation and downstream requirements for GPA gasoline.

The requirements and prohibitions specified in this section apply during the period January 1, 2004 through December 31, 2006.

(a) *Designation*. Any refiner or importer shall designate any gasoline produced or imported that is subject to the standards under § 80.216 as ''GPA'' gasoline.

(b) *Product transfer documents*. (1) On each occasion that any person transfers custody or title to gasoline designated as GPA gasoline, other than when gasoline is sold or dispensed for use in motor vehicles at a retail outlet or wholesale purchaser-consumer facility, the transferor shall provide to the transferee documents that include the following information:

(i) Identification of the gasoline as being GPA gasoline;

(ii) A statement that the gasoline may not be distributed or sold for use outside the geographic phase-in area.

(2) Except for transfers to truck carriers, retailers and wholesale purchaser-consumers, product codes may be used to convey the information required by paragraph (b)(1) of this section if such codes are clearly understood by each transferee.

(3) The requirements under paragraph (b)(1) of this section are in addition to the requirement under § 80.210(e), where appropriate, to identify gasoline as being S-RGAS.

(c) *GPA gasoline use prohibitions*. (1) All parties in the distribution system, including refiners, importers, distributors, carriers, oxygenate blenders, retailers and wholesale purchaser-consumers, are prohibited from:

(i) Selling, offering for sale, dispensing, distributing, storing or transporting GPA gasoline for use outside the geographic phase-in area; and

(ii) Commingling GPA gasoline with gasoline not designated as GPA gasoline unless the mixture is classified as GPA gasoline.

(2) Gasoline not designated as GPA gasoline may be distributed or sold for use in the geographic phase-in area.

§ 80.220 What are the downstream standards for GPA gasoline?

(a) *GPA gasoline*. (1) During the period February 1, 2004 through January 31, 2005, the sulfur content of GPA gasoline at any downstream location other than at a retail outlet or wholesale purchaser-consumer facility, and during the period March 1, 2004 through February 28, 2005, the sulfur content of GPA gasoline at any downstream location shall not exceed 378 ppm.

(2) During the period February 1, 2005 through January 31, 2007, the sulfur content of GPA gasoline at any downstream location other than at a retail outlet or wholesale purchaser-consumer facility, and during the period March 1, 2005 through February 28, 2007, the sulfur content of GPA gasoline at any downstream location shall not exceed 326 ppm.

(b) *GPA gasoline mixed with S-RGAS*. Notwithstanding the requirements in

paragraph (a) of this section, the sulfur standard applicable to a mixture of GPA gasoline and S-RGAS gasoline at a downstream location shall be the greater of the standard under paragraph (a) of this section or the standard determined under § 80.210.

(c) Notwithstanding paragraph (a) of this section, the sulfur content standard of 326 ppm at any downstream location may be extended as provided under § 80.540(m).

[65 FR 6823, Feb. 10, 2000, as amended at 66 FR 5136, Jan. 18, 2001]

HARDSHIP PROVISIONS

§ 80.225 What is the definition of a small refiner?

(a) A *small refiner* is defined as any person, as defined by 42 U.S.C. 7602(e), who: (1)(i) Produces gasoline at a refinery by processing crude oil through refinery processing units;

(ii) Employed an average of no more than 1,500 people, based on the average number of employees for all pay periods from January 1, 1998, to January 1, 1999; and

(iii) Had an average crude capacity less than or equal to 155,000 barrels per calendar day (bpcd) for 1998.

(2) For the purpose of determining the number of employees and crude capacity under paragraph (a)(1) of this section, the refiner shall include the employees and crude capacity of any subsidiary companies, any parent company and subsidiaries of the parent company, and any joint venture partners. A subsidiary under this paragraph means any subsidiary in which the refiner or parent company has a 50% or greater ownership interest.

(b) The definition under paragraph (a) of this section applies to domestic and foreign refiners. For any refiner owned by a governmental entity, the number of employees as specified in paragraph (a) of this section shall include all employees of the governmental entity.

(c) If, without merger with, or acquisition of, another business unit, a company with approved small refiner status under § 80.235 exceeds 1,500 employees, or a corporate crude capacity of 155,000 bpcd after January 1, 1999, it will be considered a small refiner for the duration of the small refiner program.

(d) Notwithstanding the definition in paragraph (a) of this section, refiners who acquire a refinery after January 1, 1999, or reactivate a refinery that was shutdown or was non-operational between January 1, 1998, and January 1, 1999, may apply for small refiner status in accordance with the provisions of § 80.235.

[65 FR 6823, Feb. 10, 2000, as amended at 66 FR 19306, Apr. 13, 2001; 67 FR 38340, June 3, 2002; 67 FR 40182, June 12, 2002]

§ 80.230 Who is not eligible for the hardship provisions for small refiners?

(a) The following are not eligible for the hardship provisions for small refiners:

(1) Refiners with refineries built after January 1, 1999;

(2) Refiners who exceed the employee or crude oil capacity criteria under § 80.225(a) on January 1, 1999, but who meet these criteria after that date, regardless of whether the reduction in employees or crude capacity is due to operational changes at the refinery or a company sale or reorganization;

(3) Importers; and

(4) Refiners who produce gasoline other than by processing crude oil through refinery processing units.

(b)(1)(i) Refiners who qualify as small under § 80.225 and subsequently cease production of diesel fuel from processing crude oil through refinery processing units, or employ more than 1,500 people or exceed the 155,000 bpcd crude oil capacity limit after January 1, 2004 as a result of merger with or acquisition of or by another entity, are disqualified as small refiners, except this shall not apply in the case of a merger between two previously approved small refiners. If disqualification occurs, the refiner shall notify EPA in writing no later than 20 days following this disqualifying event.

(ii) Except as provided under paragraph (b)(1)(iii) of this section, any refiner whose status changes under this paragraph shall meet the applicable standards of § 80.195 within a period of up to 30 months of the disqualifying event for any of its refineries that were previously subject to the small refiner

standards of § 80.240(a). However, such period shall not extend beyond December 31, 2007, or, for refineries for which the Administrator has approved an extension of the small refiner gasoline sulfur standards under § 80.553(c), December 31, 2010.

(iii) A refiner may apply to EPA for an additional six months to comply with the standards of § 80.195 if more than 30 months will be required for the necessary engineering, permitting, construction, and start-up work to be completed. Such applications must include detailed technical information supporting the need for additional time. EPA will base its decision to approve additional time on the information provided by the refiner and on other relevant information. In no case will EPA extend the compliance date beyond December 31, 2007, or, for refineries for which the Administrator has approved an extension of the small refiner gasoline sulfur standards under § 80.553(c), December 31, 2010.

(iv) During the period of time up to 30 months provided under paragraph (b)(1)(ii) of this section, and any extension provided under paragraph (b)(1)(iii) of this section, the refiner may not generate gasoline sulfur credits under § 80.310.

(2) Any refiner who qualifies as a small refiner under § 80.225 may elect to meet the standards under § 80.195 by notifying EPA in writing no later than November 15 prior to the year that the change will occur. Any refiner whose status changes under this paragraph (b)(2) shall meet the standards under § 80.195 beginning with the first averaging period subsequent to the status change.

[65 FR 6823, Feb. 10, 2000, as amended at 66 FR 19307, Apr. 13, 2001; 69 FR 39167, June 29, 2004]

§ 80.235 How does a refiner obtain approval as a small refiner?

(a) Applications for small refiner status must be submitted to EPA by December 31, 2000, except for applications submitted pursuant to § 80.225(d), which must be submitted by June 1, 2002.

(b) Applications for small refiner status must be sent to: U.S. EPA, Attn: Sulfur Program (6406J), 1200 Pennsylvania Ave., NW., Washington, DC 20460. For commercial delivery: U.S. EPA, Attn: Sulfur Program (6406J), 501 3rd Street, NW, Washington, DC 20001.

(c) The small refiner status application must contain the following information for the company seeking small refiner status, plus any subsidiary companies, any parent company and subsidiaries of the parent company, and any joint venture partners:

(1)(i) A listing of the name and address of each location where any employee worked during the 12 months preceding January 1, 1999; the average number of employees at each location based upon the number of employees for each pay period for the 12 months preceding January 1, 1999; and the type of business activities carried out at each location; or

(ii) In the case of a refiner who acquires a refinery after January 1, 1999, or reactivates a refinery that was shutdown between January 1, 1998, and January 1, 1999, a listing of the name and address of each location where any employee of the refiner worked since the refiner acquired or reactivated the refinery; the average number of employees at any such acquired or reactivated refinery during each calendar year since the refiner acquired or reactivated the refinery; and the type of business activities carried out at each location.

(2) The total corporate crude oil capacity of each refinery as reported to the Energy Information Administration (EIA) of the U.S. Department of Energy (DOE), or, in the case of a foreign refiner, a comparable reputable source, such as a professional publication or trade journal. The information submitted to EIA or the comparable reputable source is presumed to be correct. In cases where a company, domestic or foreign, disagrees with this information, the company may petition EPA with appropriate data to correct the record within 60 days after the company submits its application for small refiner status.

(3) A letter signed by the president, chief operating or chief executive officer of the company, or his/her designee, stating that the information contained in the application is true to the best of his/her knowledge.

(4) Name, address, phone number, facsimile number and E-mail address (if available) of a corporate contact person.

(d) For joint ventures, the total number of employees includes the combined employee count of all corporate entities in the venture.

(e) For government-owned refiners, the total employee count includes all government employees.

(f) Approval of small refiner status for refiners who apply under § 80.225(d) will be based on all information submitted under paragraph (c) of this section. The information submitted must show that the refiner employed an average of no more than 1500 people and had an average crude oil capacity less than or equal to 155,000 bpcd. Where appropriate, the employee and crude oil capacity criteria for such refiners will be based on the most recent 12 months of operation.

(g) EPA will notify a refiner of approval or disapproval of small refiner status by letter.

(1) If approved, EPA will notify the refiner of each refinery's applicable annual average sulfur standard, baseline volume, and per-gallon cap standard under § 80.240 for the 2004–2007 averaging periods.

(2) If disapproved, the refiner must comply with the standards in § 80.195.

(h) If EPA finds that a refiner provided false or inaccurate information on its application for small refiner status, upon notice from EPA the refiner's small refiner status will be void ab initio.

(i) Upon notification to EPA, an approved small refiner may withdraw its status as a small refiner. Effective on January 1 of the year following such notification, the small refiner will become subject to the standards at § 80.195.

[65 FR 6823, Feb. 10, 2000, as amended at 66 FR 19307, Apr. 13, 2001]

§ 80.240 What are the small refiner gasoline sulfur standards?

(a) The gasoline sulfur standards for an approved small refiner are as follows:

Refinery baseline sulfur level	Temporary sulfur standards for small refiners applicable from January 1, 2004 through December 31, 2007	
	Annual average	Per gallon cap
0 to 30	30.00	300
31 to 200	Baseline level	300
201 to 400	200.00	300
401 to 600	50% of baseline	Factor of 1.5 times the average standard.
601 and above	300.00	450

(b) The refinery annual average sulfur standards must be met on an annual calendar year basis for each refinery owned by a small refiner. The refinery annual average sulfur level is calculated in accordance with the provisions of § 80.205.

(c)(1) The refinery annual average standards specified in paragraph (a) of this section apply to the volume of gasoline produced by a small refiner's refinery up to the lesser of:

(i) 105% of the baseline gasoline volume as determined under § 80.250(a)(1); or

(ii) The volume of gasoline produced at that refinery during the averaging period by processing crude oil.

(2) If a refiner exceeds the volume limitation in paragraph (c)(1) of this section during any averaging period, the annual average sulfur standard applicable to the refiner for that averaging period is calculated as follows:

$$S_{sr} = \frac{(V_b \times S_b) + (AF \times (V_a - V_b))}{V_a}$$

Where:

S_{sr}=Small refiner annual average sulfur standard.

V_b=Applicable volume under paragraph (c)(1) of this section.

V_a=Averaging period gasoline volume.

S_b=Small refiner sulfur baseline as determined under § 80.250.

AF=Adjustment factor (120 in 2004; 90 in 2005; and 30 in 2006 and thereafter).

(3) The small refiner average standards under paragraph (a) of this section may be met using sulfur allotments or credits as provided under § 80.275 or § 80.315.

(4) The provisions for compliance deficits under § 80.205(e) do not apply to small refiners subject to the standards under this section.

(d) In the case of any refiner with small refiner status who generates sulfur allotments or credits pursuant to § 80.275(a) or § 80.305, the baseline applicable to that refiner's refinery for purposes of establishing the standard for the refinery under paragraph (a) of this section beginning in 2004 shall be the lowest annual average sulfur content for any year during the period in which the refiner generated allotments or credits.

(e) Notwithstanding paragraph (a) of this section, the temporary sulfur standards for small refiners may be extended as provided under § 80.553.

(f)(1) In the case of a refiner without approved small refiner status who acquires a refinery from a refiner with approved small refiner status under § 80.235, the applicable small refiner standards under paragraph (a) of this section will apply to the acquired small refinery for a period up to 30 months from the date of acquisition of the refinery, but no later than December 31, 2007, or, for a refinery for which the Administrator has approved an extension of the small refiner gasoline sulfur standards under § 80.553(c), December 31, 2010, after which time the standards of § 80.195 shall apply to the acquired refinery.

(2) A refiner may apply to EPA for an additional six months to comply with the standards of § 80.195 for the acquired refinery if more than 30 months will be required for the necessary engineering, permitting, construction, and start-up work to be completed. Such applications must include detailed technical information supporting the need for additional time. EPA will base its decision to approve additional time on information provided by the refiner and on other relevant information. In no case will EPA extend the compliance date beyond December 31, 2007, or, for a refinery for which the Administrator has approved an extension of the small refiner gasoline sulfur standards under § 80.553(c), December 31, 2010.

[65 FR 6823, Feb. 10, 2000, as amended at 66 FR 5136, Jan. 18, 2001; 69 FR 39167, June 29, 2004]

§ 80.245 How does a small refiner apply for a sulfur baseline?

(a) Any refiner seeking small refiner status must apply for a refinery sulfur baseline by the deadline under § 80.235 for each of the refiner's refineries by providing the following information:

(1) A sulfur baseline and baseline volume for every refinery calculated in accordance with § 80.250.

(2) The following information for each batch of gasoline produced in 1997–1998:

(i) Batch number assigned to the batch under § 80.65(d) or § 80.101(i);

(ii) Volume; and

(iii) Sulfur content.

(3) For any refiner that acquires and/or reactivates a refinery that was shut down or non-operational between January 1, 1997, and December 31, 1998, the average sulfur level and average volume of gasoline produced during each annual averaging period that the refinery was in operation after the refinery was acquired and/or reactivated. EPA will evaluate all of the information and data submitted by the refiner in determining the appropriate sulfur baseline for the refinery. Where EPA concludes that the data submitted reasonably reflects current sulfur levels, the refinery's baseline will be determined based on the average sulfur content of gasoline produced by the refinery during the most recent annual averaging period in which the refinery was in operation.

(b) The sulfur baseline application must be submitted to the address specified in § 80.235(b).

(c)(1) Foreign refiners who do not have an approved individual refinery baseline under § 80.94 must follow the procedures specified in § 80.410(b).

(2) Foreign refiners who have an approved individual refinery baseline under § 80.94, but one that was not in effect for purposes of anti-dumping compliance during the 1997–1998 annual averaging periods, must comply with the requirements of this section for the gasoline produced at the refinery and

imported into the United States during each of the annual averaging periods in which the refinery was subject to its individual anti-dumping baseline. EPA will evaluate all of the information and data submitted under this section in determining the foreign refinery's sulfur baseline pursuant to this paragraph. Where EPA concludes that the data submitted reasonably reflects current sulfur levels, the refinery's baseline will be determined based on the annual average sulfur level and volume of gasoline produced by the foreign refinery and imported into the U.S. during the most recent annual averaging period in which the refinery was subject to its individual anti-dumping baseline.

[65 FR 6823, Feb. 10, 2000, as amended at 66 FR 19307, Apr. 13, 2001]

§ 80.250 How is the small refiner sulfur baseline and volume determined?

(a)(1) The small refiner baseline volume is determined for each refinery as follows:

$$V_b = \frac{\sum_{i=1}^{n} (V_i)}{2}$$

Where:

V_B=Baseline volume.

V_I=Volume of gasoline batch i.

n = Total number of batches of gasoline produced from January 1, 1997, through December 31, 1998 (or the total number of batches of gasoline pursuant to § 80.245(a)(3); or, for a foreign refinery, the total number of batches of gasoline produced and imported into the U.S. from January 1, 1997, through December 31, 1998, or the total number of batches of gasoline produced and imported into the U.S. pursuant to § 80.245(c)(2)).

i = Individual batch of gasoline produced from January 1, 1997, through December 31, 1998 (or individual batch of gasoline pursuant to § 80.245(a)(3); or, for a foreign refinery, individual batch of gasoline produced and imported into the U.S. from January 1, 1997, through December 31, 1998, or individual batch of gasoline produced and imported into the U.S. pursuant to § 80.245(c)(2)).

(2) The small refiner sulfur baseline is determined for each refinery as follows:

$$S_b = \frac{\sum_{i=1}^{n} (V_i \times S_i)}{\sum_{i=1}^{n} V_i}$$

Where:

S_b=Small refiner sulfur baseline.

V_i=Volume of gasoline batch i.

S_i=Sulfur content of batch i.

n=Total number of batches of gasoline produced from January 1, 1997, through December 31, 1998 (or the total number of batches of gasoline pursuant to § 80.245(a)(3); or, for a foreign refinery, the total number of batches of gasoline produced and imported into the U.S. from January 1, 1997, through December 31, 1998, or the total number of batches of gasoline produced and imported into the U.S. pursuant to § 80.245(c)(2)).

i=Individual batch of gasoline produced from January 1, 1997, through December 31, 1998 (or individual batch of gasoline produced pursuant to § 80.245(a)(3); or, for a foreign refinery, individual batch of gasoline produced and imported into the U.S. from January 1, 1997, through December 31, 1998, or individual batch of gasoline produced and imported into the U.S. pursuant to § 80.245(c)(2)).

(3) Any refiner who, under § 80.69 or § 80.101(d)(4), included oxygenate blended downstream in compliance calculations for 1997–1998 must include this oxygenate in the baseline calculations for sulfur content under this section.

(4) Sulfur baseline calculations under this section shall be conducted to two decimal places.

(b) [Reserved]

(c) If at any time a small refinery baseline is determined to be incorrect, the corrected baseline applies ab initio and the annual average standards and cap standards are deemed to be those applicable under the corrected information.

[65 FR 6823, Feb. 10, 2000, as amended at 66 FR 19307, Apr. 13, 2001]

§ 80.255 Compliance plans and demonstration of commitment to produce low sulfur gasoline.

The requirements of this section apply to any refiner approved for small refiner standards who wishes to be eligible for a hardship extension under § 80.260.

(a) *Compliance commitment.* By no later than June 1, 2004, any refiner who is approved for small refinery standards must submit a preliminary report to EPA which outlines the refiner's timeline for compliance and a project plan which discusses permits, capital commitments and engineering plans for making the necessary modifications to produce gasoline that meets the 30 ppm refinery average and 80 ppm per-gallon cap sulfur standards under § 80.195 on or before January 1, 2008. Documents showing activities and progress in these areas should be provided, if available.

(b) *Demonstration of Progress.* (1)(i) By no later than June 1, 2005, the small refiner must submit a report to EPA that states in detail the progress toward compliance with the 30 ppm refinery average and 80 ppm cap sulfur standards to date based on their timeline and project plan. The report must include:

(A) Copies of approved permits for construction of the equipment, or the permit application if approval is still pending;

(B) Copies of contracts for design and construction; and

(C) Any available evidence of having secured the necessary financing to complete the required construction;

(ii) If the refiner anticipates any difficulties in meeting its compliance commitments under this section, the refiner must submit a detailed report of all efforts made to date and the factors that may cause delay, including costs, specification of engineering or other design work needed and reasons for delay, specification of equipment needed and any reasons for delay, potential equipment suppliers and history of negotiations, and any other relevant information. If unavailability of equipment is a factor, the report must include a discussion of other options considered and the reasons these other options are not feasible.

(2) By no later than June 1, 2006, the small refiner must submit to EPA evidence that on-site construction has begun and that, absent unforeseen difficulties, the small refiner will be producing complying gasoline by January 1, 2008. If construction has not begun, the refiner must demonstrate that it has made all reasonable efforts to begin construction, that substantial progress is being made to begin construction as soon as possible, and that construction can be completed in time to begin production of gasoline that complies with the standards of § 80.195 by January 1, 2008.

(c) *Additional information.* The Administrator may request any additional information necessary to determine a refiner's commitment and/or progress toward meeting the standards in § 80.195 by 2008.

(d) *Failure to comply with requirements.* Any small refiner who fails to submit the progress reports required under this section will not be eligible for a hardship extension under § 80.260.

§ 80.260 What are the procedures and requirements for obtaining a hardship extension?

(a) An approved small refiner who has filed the reports specified in § 80.255 may apply to EPA for a hardship extension of the small refiner standards for calendar years 2008 and 2009. The application must be submitted in writing no later than January 1, 2007, to U.S. EPA, Attn: Sulfur Program (6406J), 1200 Pennsylvania Ave., NW., Washington, DC 20460. For commercial (non-postal) delivery: U.S. EPA, Attn: Sulfur Program, 501 3rd Street NW, Washington, DC 20001.

(b) The application must specify the factors that demonstrate a significant economic hardship and must provide a detailed discussion regarding the inability of the refinery to produce gasoline meeting the requirements of § 80.195. Such an application must include, at a minimum, the following information:

(1) Documentation of efforts made to obtain necessary financing, including:

(i) Copies of loan applications for the necessary financing of the construction of appropriate sulfur reduction technology and other equipment procurements or improvements; and

(ii) If financing has been disapproved or is otherwise unsuccessful, documents supporting the basis for that disapproval and evidence of efforts to pursue other means of financing;

(2) A detailed analysis of the reasons the refinery is unable to produce gasoline meeting the standards of § 80.195 in 2008, including costs, specification of equipment still needed, potential equipment suppliers, and efforts already completed to obtain the necessary equipment;

(3) If unavailability of equipment is part of the reason for the inability to comply, a discussion of other options considered, and the reasons these other options are not feasible;

(4) If relevant, a demonstration that a needed or lower cost technology is immediately unavailable, but will be available in the near future, and full information regarding when and from what sources it will be available;

(5) Schematic drawings of the refinery configuration as of January 1, 1999, and as of the date of the hardship extension application, and any planned future additions or changes;

(6) If relevant, a demonstration that a temporary unavailability exists of engineering or construction resources necessary for design or installation of the needed equipment;

(7) If sources of crude oil lower in sulfur than what the refiner is currently using are available, full information regarding the availability of these different crude sources, the sulfur content of those crude sources, the cost of the different crude sources over the past five years, and an estimate of gasoline sulfur levels achievable by the refinery if the lower sulfur crude sources were used;

(8) A discussion of any sulfur reductions that can be achieved from current levels;

(9) The date the refiner anticipates compliance with the standards in § 80.195 can be achieved at its refinery;

(10) An analysis of the economic impact of compliance on the refiner's business (including financial statements from the last 5 years, or for any time period up to 10 years, at EPA's request); and

(11) Any other information regarding other strategies considered, including strategies or components of strategies that do not involve installation of equipment, and why meeting the standards in § 80.195 beginning in 2008 is infeasible.

(c) The hardship extension application must contain a letter signed by the president or the chief operating or chief executive officer of the company, or his/her designee, stating that the information contained in the application is true to the best of his/her knowledge.

§ 80.265 How will the EPA approve or disapprove a hardship extension application?

(a) EPA will evaluate each application for hardship extension on a case-by-case basis. The factors considered for a hardship extension may include: The refiner's financial position and efforts to obtain capital funding; the refiner's efforts to procure necessary equipment, obtain design and engineering services and construction contractors; the availability of desulfurization equipment; and any other relevant factor. An extension will be granted for a refinery for the 2008 averaging period if the small refiner who owns the refinery adequately demonstrates that severe economic hardship would result if compliance with the standards in § 80.195 is required in 2008, or that compliance with the standard in 2008 is not feasible for reasons beyond the refiner's control, and that the refiner has made the best efforts possible to achieve compliance with the national standards by January 1, 2008. Upon reapplication by the refiner, if EPA determines that further relief is appropriate, EPA may grant a further extension through the 2009 averaging period. In no case will a further extension for the 2009 averaging period be granted unless the refiner demonstrates conclusively that it has financing in place and that it will be able to complete construction and meet the national gasoline sulfur standards no later than December 31, 2009.

(b) EPA may request more information, if necessary, for evaluation of the application. If requested information is not submitted within the time specified in EPA's request, or any extensions granted, the application may be denied.

(c) EPA will notify the refiner of approval or disapproval of hardship extension by letter.

(1) If approved, EPA will also notify the refiner of the date that full compliance with the standards specified at § 80.195 must be achieved or what interim sulfur levels or schedules apply, if any.

(2) If disapproved, beginning January 1, 2008, the refinery is subject to the requirements in § 80.195. Refiners who receive an extension for the 2008 averaging period shall meet the standards in § 80.195 beginning on January 1, 2009, unless EPA grants an extension of the hardship relief for an additional year. If such an additional extension is granted, the refiner shall meet the standards in § 80.195 on January 1, 2010.

(d) Refiners who receive a hardship extension may be required to meet more stringent standards than those which apply to them during 2007, and/or could be required to offset excess sulfur levels. EPA may impose reasonable conditions on an extension, such as requiring segregation of the small refiner's gasoline or requiring the gasoline to be sold for use in older vehicles only.

§ 80.270 Can a refiner seek temporary relief from the requirements of this subpart?

(a) EPA may permit a refiner to produce and distribute gasoline which does not meet the requirements of this subpart if the refiner demonstrates that:

(1) Unusual circumstances exist that impose extreme hardship and significantly affect ability to comply by the applicable date; and

(2) It has made best efforts to comply with the requirements of this subpart (including making efforts to obtain credits and/or allotments).

(b) Applications must be submitted to EPA by September 1, 2000. Relief may be granted from some or all of the requirements of this subpart, at EPA's discretion; however, EPA reserves the right to deny applications for appropriate reasons, including unacceptable environmental impact. Approval to distribute gasoline which does not meet the requirements of this subpart may be granted for such time period as EPA determines is appropriate, but shall not extend beyond January 1, 2008.

(c)(1) Applications must include a plan demonstrating how the refiner will comply with the requirements of this subpart as expeditiously as possible. The plan shall include a showing that contracts are or will be in place for engineering and construction of desulfurization equipment, a plan for applying for and obtaining any permits necessary for construction, a description of plans to obtain necessary capital, and a detailed estimate of when the requirements of this subpart will be met.

(2) Applications must include a detailed description of the refinery configuration and operations, including, at a minimum, the following information:

(i) The portion of gasoline production that is produced using an FCC unit;

(ii) The refinery's hydrotreating capacity;

(iii) The refinery's total reformer unit throughput capacity;

(iv) The refinery's total crude capacity;

(v) Total crude capacity of any other refineries owned by the same entity;

(vi) Total volume of gasoline production at the refinery;

(vii) Total volume of other refinery products; and

(viii) Geographic location(s) in which gasoline will be sold.

(3) Applications must include, at a minimum, the following information:

(i) Detailed description of efforts to obtain capital for refinery investments;

(ii) Bond rating of entity that owns the refinery; and

(iii) Estimated capital investment needed to comply with the requirements of this subpart by the applicable date.

(4) Applicants must also provide any other relevant information requested by EPA.

(d) EPA may impose any reasonable conditions on waivers granted under this section.

ALLOTMENT TRADING PROGRAM

§ 80.271 How can a small refiner obtain an adjustment of its 2004–2007 per-gallon cap standard?

(a) EPA may in its discretion adjust the small refiner per-gallon cap sulfur standard established for a refinery under § 80.240(a) (the established small refiner per-gallon standard) if the refiner demonstrates that the burden of

complying with the established small refiner per-gallon standard would effectively prevent the refiner from participating in the small refiner relief provided in § 80.240. No refiner will be eligible for an adjustment of its established per-gallon standard above 450 ppm. The refinery annual average sulfur standards in § 80.240(a) are not affected by this section.

(b) A refiner wishing to apply for such an adjustment of its established small refiner per-gallon sulfur standard under § 80.240(a) must send a letter to Gasoline Sulfur Program, U.S. EPA, Office of Transportation and Air Quality, 2000 Traverwood Dr., Ann Arbor, MI 48105 no later than January 1, 2003. Such application must include the following information:

(1) A detailed description of the nature of the difficulty that the per-gallon cap creates;

(2) The refiner's proposed adjusted per-gallon cap standard and the proposed duration for the adjustment, including an explanation of how a lower per-gallon cap standard or shorter duration would not address the hardship;

(3) The refiner's expected actual annual average sulfur level (i.e., prior to the use of any credits or allotments) for each year that the adjustment would be in effect;

(4) The refiner's estimate of the number of gallons of gasoline it produces that will exceed the established small refiner per-gallon standard under § 80.240(a) for each year that the adjusted per-gallon cap would apply; and

(5) The number of sulfur credits or allotments that the refiner estimates will be required under paragraph (d) of this section for each year that the adjusted per-gallon cap would apply and a plan for obtaining this number of credits or allotments.

(6) Other relevant information that EPA requests.

(c) EPA will evaluate each application for an adjusted per-gallon cap sulfur standard on a case-by-case basis. EPA may impose any reasonable conditions on adjustments granted under this section. EPA may in its discretion set forth the duration of the adjusted per-gallon cap sulfur standard but in no case shall it extend beyond December 31, 2007.

(d)(1) A small refiner with an adjusted per-gallon sulfur cap standard under paragraph (a) of this section must obtain and use sulfur credits or allotments to offset the amount that the adjusted standard exceeds the established small refiner per-gallon standard under § 80.240(a). The number of sulfur credits or allotments needed for each year that the adjusted per-gallon cap would apply is calculated on a per-batch basis according to paragraph (d)(2) of this section and summed over the averaging period.

(2) The formula for determining the number of sulfur credits or allotments that such a small refiner is required to use for any batch of gasoline exceeding the established small refiner per-gallon standard under § 80.240(a) is as follows:

$$CR_b = V_b \times (S_b - S_c)$$

Where:

CR_b = number of sulfur allotments or sulfur credits needed for the gasoline batch (ppm-gallons)

V_b = Volume of the gasoline batch (gallons)

S_b = Sulfur level of the gasoline batch (ppm)

S_c = Small refiner per-gallon cap standard established for that refinery under § 80.240(a), in ppm.

(3) Sulfur credits or allotments used when a small refiner exceeds an established per-gallon cap sulfur standard under § 80.240(a) must be separate from and in addition to credits or allotments used for any other purposes provided under § 80.275 or § 80.315.

(e) The approving official for an adjustment under this section is the Director of the Office of Transportation and Air Quality in the EPA Office of Air and Radiation.

[67 FR 40182, June 12, 2002]

§ 80.275 How are allotments generated and used?

(a) *Generation of allotments and credits in 2003.* (1) During 2003 only, any domestic or foreign refiner who produces gasoline from crude oil may have the option to generate credits in accordance with the provisions of § 80.305 or generate allotments and credits under paragraph (a)(2) of this section.

(2) If the average sulfur content of the gasoline produced at a refinery is less than the refinery's baseline as determined under § 80.295 and is 60 ppm or

less, allotments and credits may be generated using the following procedures. This paragraph (a) does not apply to importers.

(i) If the average sulfur content of the gasoline produced at a refinery is less than or equal to 30, and the refinery's sulfur baseline is greater than 120, the following procedures apply:

$SA_{TypeB} = (30 - Sa) \times V$
$SA_{TypeA} = V \times 90$
$CR = (S_{Base} - 120) \times V$

(ii) If the average sulfur content of the gasoline produced at a refinery is less than or equal to 30, and the refinery's sulfur baseline is greater than 30 but less than or equal to 120, the following procedures apply:

$SA_{TypeB} = (30 - S_a) \times V$
$SA_{TypeA} = (S_{Base} - 30) \times V$

(iii) If the average sulfur content of the gasoline produced at a refinery is less than or equal to 30, and the refinery's sulfur baseline is less than or equal to 30, the following procedures apply:

$SA_{TypeB} = (S_{Base} - S_a) \times V$

(iv) If the average sulfur content of the gasoline produced at a refinery is greater than 30, and the refinery's sulfur baseline is greater than 120, the following procedures apply:

$SA_{TypeA} = ((120 - S_a) \times V) \times 0.8$
$CR = (S_{Base} - 120) \times V$

(v) If the average sulfur content of the gasoline produced at a refinery is greater than 30, and the refinery's sulfur baseline is less than or equal to 120, the following procedures apply:

$SA_{TypeA} = ((S_{Base} - S_a) \times V) \times 0.8$

(vi) For purposes of the equations under paragraphs (a)(2)(i) through (v) of this section, the following definitions apply:

SA_{TypeB} = Type B sulfur allotments generated.
SA_{TypeA} = Type A sulfur allotments generated.
CR = Credits generated.
S_{Base} = Refinery's sulfur baseline value under § 80.295.
S_a = Average sulfur content of the gasoline produced at the refinery during 2003 (or for a foreign refinery, all gasoline produced during 2003 that was imported into the U.S.).
V = Volume of gasoline produced at the refinery during 2003 (or for a foreign refinery, all gasoline produced during 2003 that was imported into the U.S.).

(b) *Generation of allotments in 2004 and 2005.* During 2004 and 2005 only, refiners and importers that have corporate pool average sulfur levels below the corporate pool average standards under § 80.195 may generate sulfur allotments separately for each year using the following procedures.

(1) If the average sulfur content of the gasoline produced or imported is less than 30 the following procedures apply:

$SA_{TypeB} = (30 - S_a) \times V_a$
$SA_{TypeA} = (S_{PS} - 30) \times V_a$

(2) If the average sulfur content of the gasoline produced or imported is equal to or greater than 30 the following procedures apply:

$SA_{TypeA} = (S_{PS} - S_a) \times V_a$

(3) For purposes of the equations under paragraphs (b)(1) and (2) of this section, the following definitions apply:

SA_{TypeB} = Type B sulfur allotments generated.
SA_{TypeA} = Type A sulfur allotments generated.
S_a = Corporate pool average sulfur level for the year.
S_{PS} = Corporate pool average standard (120 in 2004; 90 in 2005).
V_a = Total volume of gasoline produced and/or imported during the year.

(4) Oxygenate blenders may not generate allotments under this section.

(c) *Use of sulfur allotments to meet standards.* (1) Refiners and importers may use Type A and Type B sulfur allotments to meet the corporate pool average standards under § 80.195, except that if allotments generated in 2003 or 2004 are used to meet the corporate pool standard in 2005 the allotments generated in 2003 or 2004 shall be reduced in value by 50%.

(2)(i) Small refiners subject to the standards under § 80.240, and refiners and importers of gasoline designated as GPA gasoline under § 80.219(a), may use sulfur allotments to meet their annual average refinery or importer standards.

(ii) Small refiners subject to the standards under § 80.240 and that have received an adjustment of their per-

gallon cap sulfur standards pursuant to § 80.271(a) may also use sulfur allotments to meet the requirements of § 80.271(d)(1) for any refinery that has received such an adjustment.

(d) *Transfers of sulfur allotments.* Sulfur allotments generated under this section may be transferred, provided that:

(1) No allotment may be transferred more than twice: The first transfer by the refiner or importer who generated the allotment may only be made to a refiner or importer who intends to use the allotment; if the transferee cannot use the allotment, it may make the second, and final, transfer only to a refiner or importer who intends to use the allotment. In no case may an allotment be transferred more than twice before being used or terminated.

(2) The allotment transferor must apply any allotments necessary to meet the transferor's corporate pool average standard before transferring allotments to any other refiner or importer or before converting allotments into credits.

(3) The transferor must supply to the transferee records indicating the year of generation and type of the allotments, the identity of the refiner or importer who generated the allotments, and the identity of the transferring party, if it is not the same part that generated the allotments.

(4) The transferor must inform the transferee whether any transferred allotments are Type A allotments or Type B allotments, as defined in paragraphs (a) and (b) of this section.

(5) In the case of allotments that have been calculated or created improperly, or are otherwise determined to be invalid, the following provisions apply:

(i) Invalid allotments cannot be used to achieve compliance with the transferee's corporate pool average standard or be converted to credits, regardless of the transferee's good faith belief that the allotments were valid.

(ii) The refiner or importer who used the allotments, and any transferor of the allotments, must adjust their allotment records and reports and sulfur calculations as necessary to reflect the proper allotments.

(iii) Any allotments remaining after correcting for the improperly created allotments must first be applied to correct the invalid transfers before the transferor may transfer any other allotments or before converting allotments into credits.

(e) *Conversion of allotments into credits.* A refiner or importer may convert allotments into credits using the following procedures:

(1) Type A allotments may be converted into credits with the same requirements and limitations on use that apply under § 80.315 to credits generated in 2000 through 2003.

(2) Type B allotments may be converted into credits with the same requirements and limitations on use that apply under § 80.315 to credits generated in 2004 and later, based on the year of creation of the allotment.

(3) Allotments generated in 2003 or 2004 which are carried over to 2005 are discounted by 50 percent. The discounted allotments may be used to demonstrate compliance with the corporate pool average standard in 2005, or they may be converted into credits for use in demonstrating compliance with the refinery average standard in 2005, or in a subsequent averaging period, in accordance with the provisions of this paragraph (e). Any allotments generated in 2003 or 2004 that are converted into credits before being carried over to 2005 are not discounted. Any allotments generated in 2003 or 2004 that are converted into credits before being carried over to 2005 may be reconverted into allotments for use in demonstrating compliance with the corporate pool average standard in 2005, but such reconverted allotments are discounted by 50 percent.

(f) *Small refiners.* Small refiners subject to the standards under § 80.240 may not generate sulfur allotments under paragraph (b) of this section.

(g) *GPA gasoline.* GPA gasoline that is included in the refiner's or importer's corporate pool average under § 80.216(f)(2) must be included in the calculations under paragraph (b) of this section. No refiner or importer may generate allotments in 2004 or 2005 who is not required to meet the corporate pool average standards.

(h) Allotments and credits under this program are in units of ''ppm-gallons''.

[65 FR 6823, Feb. 10, 2000, as amended at 67 FR 40183, June 12, 2002]

AVERAGING, BANKING AND TRADING (ABT) PROGRAM—GENERAL INFORMATION

§ 80.280 [Reserved]

§ 80.285 Who may generate credits under the ABT program?

(a) *Credit generation in 2000 through 2003.* (1) Credits may be generated in 2000 through 2003 under § 80.305 by refiners who produce gasoline from crude oil, and are:

(i) Refiners who establish a sulfur baseline under § 80.295 for a refinery;

(ii) Foreign refiners for refineries with an approved baseline under § 80.94, or refineries with baselines established in accordance with § 80.290(d); or

(iii) Small refiners for any refinery subject to the standards under § 80.240, using their small refiner baseline established under § 80.250 for that refinery.

(2) Importers and oxygenate blenders may not generate credits under § 80.305.

(b) *Credit generation beginning in 2004.* (1) Credits may be generated beginning in 2004 under § 80.310 by:

(i) Refiners for any refinery, and importers subject to the standards under § 80.195;

(ii) Refiners and importers of gasoline designated as GPA gasoline under § 80.219, using the least of 150.00 ppm, or the refinery's or importer's 1997–98 baseline calculated under § 80.295 plus 30.00 ppm, or the refinery's lowest annual average sulfur level for any year from 2000 through 2003 during which the refinery generated credits or allotments plus 30.00 ppm (for any party generating credits under both paragraphs (b)(1)(i) of this section and this paragraph (b)(1)(ii), such credits must be calculated separately); or

(iii) Small refiners for any refinery subject to the standards under § 80.240, using refinery's standard established under § 80.240.

(2) Generation of credits under § 80.310 for all imported gasoline shall be through the importer.

(3) Oxygenate blenders may not generate credits under § 80.310.

[65 FR 6823, Feb. 10, 2000, as amended at 66 FR 19307, Apr. 13, 2001; 67 FR 40183, June 12, 2002; 71 FR 54912, Sept. 20, 2006]

§ 80.290 How does a refiner apply for a sulfur baseline?

(a) The refiner must submit an application to EPA which includes the information required under paragraph (c) of this section no later than September 30 of the year in which the refiner plans to begin generating credits, or the refiner or an importer plans to sell gasoline in the geographic phase-in area in accordance with § 80.217.

(b) The sulfur baseline request must be sent to: U.S. EPA, Attn: Sulfur Program (6406J), 1200 Pennsylvania Ave., NW Washington, DC 20460. For commercial (non-postal) delivery: U.S. EPA, Attn: Sulfur Program, 501 3rd Street NW., Washington, DC 20001.

(c) The sulfur baseline application must include the following information:

(1) A listing of the names and addresses of all refineries owned by the corporation for which the refiner is applying for a sulfur baseline.

(2) The annual average gasoline sulfur baseline for gasoline produced in 1997–1998, for each refinery for which the refiner is applying for a sulfur baseline, calculated in accordance with § 80.295.

(3) A letter signed by the president, chief operating or chief executive officer, of the company, or his/her delegate, stating that the information contained in the sulfur baseline determination is true to the best of his/her knowledge.

(4) Name, address, phone number, facsimile number and E-mail address of a corporate contact person.

(5) The following information for each batch of gasoline produced in 1997–1998:

(i) Batch number assigned to the batch under § 80.65(d) or § 80.101(i);

(ii) Volume; and

(iii) Sulfur content.

(6) For any refiner that acquires and/or reactivates a refinery that was shut down or non-operational between January 1, 1997, and December 31, 1998, the

average sulfur level of gasoline produced during each annual averaging period that the refinery was in operation after the refinery was acquired and/or reactivated. EPA will evaluate all of the data submitted by the refiner in determining the appropriate sulfur baseline for the refinery. Where EPA concludes that the data submitted reasonably reflects current sulfur levels, the refinery's baseline will be determined based on the average sulfur content of the refinery's gasoline production during the most recent annual averaging period the refinery was in operation.

(d)(1) Foreign refiners who do not have an approved refinery baseline under § 80.94 must follow the procedures specified in § 80.410(b).

(2) Foreign refiners who have an approved individual refinery baseline under § 80.94, but one that was not in effect for purposes of anti-dumping compliance during the 1997–1998 annual averaging periods, must comply with the requirements of this section for the gasoline produced at the refinery and imported to the U.S. during each annual averaging period in which the refinery was subject to its individual anti-dumping baseline. EPA will evaluate all of the information and data submitted under this section in determining a foreign refinery's sulfur baseline pursuant to this paragraph (d). Where EPA concludes that the data submitted reasonably reflects current sulfur levels, a foreign refinery's baseline sulfur level under this paragraph will be determined based on the average sulfur level of gasoline produced by the foreign refinery and imported to the U.S. during the most recent annual averaging period in which the refinery was subject to its individual anti-dumping baseline.

(e) Within 60 days of receipt of an application under this section, EPA will notify the refiner of approval of the refinery's baseline or of any deficiencies in the application.

(f) If at any time the baseline submitted in accordance with the requirements of this section is determined to be incorrect, EPA will notify the refiner of the corrected baseline.

(g) Any refiner that seeks temporary relief under § 80.270 shall apply for a refinery sulfur baseline in accordance with the provisions of this section and § 80.295, and if applicable, § 80.410(b), no later than September 1, 2000.

[65 FR 6823, Feb. 10, 2000, as amended at 66 FR 19308, Apr. 13, 2001]

ABT PROGRAM—BASELINE DETERMINATION

§ 80.295 How is a refinery sulfur baseline determined?

(a) A refinery's gasoline sulfur baseline for the purpose of generating credits during years 2000 through 2003 is calculated using the following equation:

$$S_{Base} = \frac{\sum_{i=1}^{n} (Vi \times Si)}{\sum_{i=1}^{n} Vi}$$

Where:

S_{Base}=Sulfur baseline value.

V_i=Volume of gasoline batch i.

S_i=Sulfur content of gasoline batch i.

n = Total number of batches of gasoline produced during January 1, 1997 through December 31, 1998 (or the total number of batches of gasoline pursuant to § 80.290(c)(6); or, for a foreign refinery, the total number of batches of gasoline produced and imported into the U.S. during January 1, 1997 through December 31, 1998, or, the total number of batches of gasoline produced and imported into the U.S. pursuant to § 80.290(d)(2)).

i = Individual batch of gasoline produced during January 1, 1997 through December 31, 1998 (or individual batch of gasoline produced pursuant to § 80.290(c)(6); or, for a foreign refinery, individual batch of gasoline produced and imported into the U.S. during January 1, 1997 through December 31, 1998, or, individual batch of gasoline produced and imported into the U.S. pursuant to § 80.290(d)(2)).

(b) Any refiner who, under § 80.69 or § 80.101(d)(4), included oxygenate blended downstream in compliance calculations for 1997–1998 for a refinery must include this oxygenate in the baseline calculations for sulfur content for that refinery under paragraph (a) of this section.

(c) Sulfur baseline calculations under this section shall be conducted to two decimal places.

[65 FR 6823, Feb. 10, 2000, as amended at 66 FR 19308, Apr. 13, 2001]

§ 80.300 [Reserved]

ABT PROGRAM—CREDIT GENERATION

§ 80.305 How are credits generated during the time period 2000 through 2003?

(a) Credits must be calculated as follows:

$$CR_a = V_a \times (S_{Base} - S_a)$$

Where:

CR_a=Credits generated for the averaging period.

V_a = Total volume of gasoline produced during the averaging period at the refinery (or for a foreign refinery, the total volume of gasoline produced during the averaging period at the refinery that was imported into the U.S. in accordance with the requirements of § 80.410)

S_{Base}=Sulfur baseline value for the refinery established under § 80.250 or § 80.295.

S_a = Actual annual average sulfur level, calculated in accordance with the provisions of § 80.205, for gasoline produced during the averaging period by the refinery, exclusive of any credits, (or for a foreign refinery, the actual average sulfur level, calculated in accordance with the provisions of § 80.205, for gasoline produced during the averaging period at the refinery that was imported into the U.S., in accordance with the requirements of § 80.410, exclusive of any credits.)

(b) The refiner may include any oxygenates included in its RFG or conventional gasoline volume under §§ 80.65 and 80.101(d)(4), respectively, for the purpose of generating credits.

(c) Credits under this program are in units of ''ppm-gallons''.

(d) Refiners may generate credits for gasoline produced during an averaging period for a refinery only if the annual average sulfur level for the gasoline produced at that refinery during the averaging period is less than 0.90 of the refinery's baseline under § 80.250 or § 80.295.

(e) Credits generated in accordance with paragraph (a) of this section must be identified by the year of creation.

(f) For gasoline produced during the year 2000, the averaging period for credits generated in accordance with paragraph (a) of this section may be less than the full calendar year. Such partial-year averaging period will begin with the first full month for which all applicable sampling, testing, and documentation requirements are met.

[65 FR 6823, Feb. 10, 2000, as amended at 66 FR 19308, Apr. 13, 2001; 67 FR 40183, June 12, 2002]

§ 80.310 How are credits generated beginning in 2004?

(a) A refiner for any refinery, or an importer, may generate credits in 2004 and thereafter if the annual average sulfur level for gasoline produced or imported for the averaging period is less than 30.00 ppm; or, for refiners that are subject to the small refiner standards in § 80.240, the small refiner annual average sulfur standard applicable to that refinery; or, for refiners and importers subject to the GPA standards in § 80.216, the least of 150.00 ppm, or the refinery's or importer's 1997–1998 sulfur level calculated under § 80.295 plus 30.00 ppm, or the refinery's lowest annual average sulfur level for any year from 2000 through 2003 during which the refinery generated credits or allotments plus 30.00 ppm.

(b) Credits are calculated as follows:

$$CR_a = V_a \times (S_{Credit} - S_a)$$

Where:

CR_a = Credits generated for the averaging period.

V_a = Total annual volume of gasoline produced at a refinery or imported during the averaging period.

S_{Credit} = 30.00 ppm; or the sulfur standard for a small refinery established under § 80.240; or, for gasoline designated as GPA gasoline under § 80.219, the least of 150.00 ppm, or the refinery's or importer's 1997–1998 sulfur level calculated under § 80.295 plus 30.00 ppm, or the refinery's lowest annual average sulfur level for any year from 2000 through 2003 during which the refinery generated credits or allotments plus 30.00 ppm.

S_a = Actual annual average sulfur level, calculated in accordance with the provisions of § 80.205, for gasoline produced at a refinery or imported during the averaging period, exclusive of any credits.

(c) Credits generated in accordance with this section must be identified by the year of creation.

[65 FR 6823, Feb. 10, 2000, as amended at 66 FR 19308, Apr. 13, 2001; 67 FR 40184, June 12, 2002; 71 FR 54912, Sept. 20, 2006]

ABT PROGRAM—CREDIT USE

§ 80.315 How are credits used and what are the limitations on credit use?

(a) *Credit use*. Credits may be used to meet the applicable refinery or importer annual average sulfur standards under § 80.195, § 80.216, or § 80.240, or may be used to meet the offset requirement under § 80.271(d)(1) for any refinery with an adjustment of itsper-gallon cap standard pursuant to § 80.271(a), provided that:

(1) Sulfur credits used were generated pursuant to the requirements of this subpart; and

(2) The requirements of paragraphs (b) and (c) of this section are met.

(b) *Credit transfers*. (1) Credits obtained from other persons may be used to meet the annual average standards specified in § 80.195, § 80.216, or § 80.240, or may be used to meet the offset requirement under § 80.271(d)(1) for any refinery with an adjustment of itsper-gallon cap standard pursuant to § 80.271(a), if all the following conditions are met:

(i) The credits are generated and reported according to the requirements of this subpart.

(ii) The credits are used in compliance with the limitations regarding the appropriate periods for credit use in this subpart.

(iii) Any credit transfer takes place no later than the last day of February following the calendar year averaging period when the credits are used.

(iv) No credit may be transferred more than twice: The first transfer by the refiner or importer who generated the credit may only be made to a refiner or importer who intends to use the credit; if the transferee cannot use the credit, it may make the second, and final, transfer only to a refiner or importer who intends to use the credit. In no case may a credit be transferred more than twice before being used or terminated.

(v) The credit transferor must apply any credits necessary to meet the transferor's applicable average standard before transferring credits to any other refiner or importer.

(vi) No credits may be transferred that would result in the transferor having a negative credit balance.

(vii) Each transferor must supply to the transferee records indicating the years the credits were generated, the identity of the refiner or importer who generated the credits, and the identity of the transferring party, if it is not the same party that generated the credits.

(2) In the case of credits that have been calculated or created improperly, or are otherwise determined to be invalid, the following provisions apply:

(i) Where a refiner's baseline has been determined to be incorrect under § 80.250(c) or § 80.290(f), any credits generated, banked, used or traded must be adjusted to reflect the corrected baseline.

(ii) Invalid credits cannot be used to achieve compliance with the transferee's averaging standard, regardless of the transferee's good faith belief that the credits were valid.

(iii) The refiner or importer who used the credits, and any transferor of the credits, must adjust their credit records and reports and sulfur calculations as necessary to reflect the proper credits.

(iv) Any properly created credits existing in the transferor's credit balance after correcting the credit balance, and after the transferor applies credits as needed to meet the average standard at the end of the compliance year, must first be applied to correct the invalid transfers before the transferor trades or banks the credits.

(c) *Limitations on credit use*. (1) Credits generated prior to 2004 may only be used for demonstrating compliance with the refinery or importer annual average standards under § 80.195 during the 2005 and 2006 averaging periods. Such credits may be used to demonstrate compliance with the standards under § 80.216 during the 2004 through 2006 averaging periods, and with the standards under § 80.240 during the 2004 through 2007 averaging periods, and the 2008 and 2009 averaging periods,

if allowed under the terms of a hardship extension under § 80.265.

(2) Credits generated in 2004 or later may only be used for demonstrating compliance with standards during an averaging period within five years of the year of generation.

(3) A refiner or importer possessing credits must use all credits prior to falling into compliance deficit under § 80.205(e).

(4) Credits may not be used to meet corporate pool average standards under § 80.195.

[65 FR 6823, Feb. 10, 2000, as amended at 67 FR 40184, June 12, 2002]

§§ 80.320–80.325 [Reserved]

SAMPLING, TESTING AND RETENTION REQUIREMENTS FOR REFINERS AND IMPORTERS

§ 80.330 What are the sampling and testing requirements for refiners and importers?

(a) *Sample and test each batch of gasoline.* (1) Refiners and importers shall collect a representative sample from each batch of gasoline produced or imported and test each sample to determine its sulfur content for compliance with requirements under this subpart prior to the gasoline leaving the refinery or import facility, using the sampling and testing methods provided in this section.

(2) Except as provided in paragraph (a)(3) of this section, the requirements of this section apply beginning January 1, 2004, or January 1 of the first year of allotment or credit generation under § 80.275 or § 80.305, whichever is earlier.

(3) Prior to January 1, 2004:

(i) Any refiner may release gasoline from the refinery prior to obtaining the test results required under paragraph (a)(1) of this section.

(ii) Any refiner of conventional gasoline may combine samples of gasoline from more than one batch of gasoline or blendstock prior to analysis and treat such composite sample as one batch of gasoline or blendstock pursuant to the requirements of § 80.101(i)(2).

(4)(i) Beginning January 1, 2004, any refiner who produces gasoline using computer-controlled in-line blending equipment is exempt from the requirement of paragraph (a)(1) of this section to obtain the test results required under paragraph (a)(1) of this section prior to the gasoline leaving the refinery, provided that the refiner obtains an exemption from this requirement from EPA. To obtain such exemption, the refiner must:

(A) Have been granted an in-line blending exemption under § 80.65(f)(4); or

(B) If the refiner has not been granted an exemption under § 80.65(f)(4), submit to EPA all of the information required under § 80.65(f)(4)(i)(A). A letter signed by the president, chief operating or chief executive officer of the company, or his/her designee, stating that the information contained in the submission is true to the best of his/her belief must accompany any submission under this paragraph (a)(4)(i)(B).

(ii) Refiners who seek an exemption under paragraph (a)(4)(i) of this section must comply with any request by EPA for additional information or any other requirements that EPA includes as part of the exemption.

(iii) Within 60 days of EPA's receipt of a submission under paragraph (a)(4)(i)(B) of this section, EPA will notify the refiner if the exemption is not approved or of any deficiencies in the refiner's submission, or if any additional information is required or other requirements are included in the exemption pursuant to paragraph (a)(4)(ii) of this section. In the absence of such notification from EPA, the effective date of an exemption under paragraph (a)(4)(i) of this section for refiners who do not hold an exemption under § 80.65(f)(4) is 60 days from EPA's receipt of the refiner's submission under paragraph (a)(4)(i)(B) of this section.

(iv) EPA reserves the right to modify the requirements of an exemption under paragraph (a)(4)(i) of this section, in whole or in part, at any time, if EPA determines that the refiner's operation does not effectively or adequately control, monitor or document the sulfur content of the refinery's gasoline production, or if EPA determines that any other circumstances exist which merit modification of the requirements of an exemption, such as

advancements in the state of the art for in-line blending measurement which allow for additional control or more accurate monitoring or documentation of sulfur content. If EPA finds that a refiner provided false or inaccurate information in any submission required for an exemption under this section, upon notification from EPA, the refiner's exemption will be void ab initio.

(b) *Sampling methods*. For purposes of paragraph (a) of this section, refiners and importers shall sample each batch of gasoline by using one of the following methods:

(1) Manual sampling of tanks and pipelines shall be performed according to the applicable procedures specified in one of the two following methods:

(i) American Society for Testing and Materials (ASTM) method D 4057–95, entitled ''Standard Practice for Manual Sampling of Petroleum and Petroleum Products.''

(ii) Samples collected under the applicable procedures in ASTM method D 5842–95, entitled ''Standard Practice for Sampling and Handling of Fuels for Volatility Measurement,'' may be used for measuring sulfur content if there is no contamination present that could affect the sulfur test result.

(2) Automatic sampling of petroleum products in pipelines shall be performed according to the applicable procedures specified in ASTM method D 4177–95, entitled ''Standard Practice for Automatic Sampling of Petroleum and Petroleum Products.''

(c) *Test method for measuring sulfur content of gasoline*. (1) For purposes of paragraph (a) of this section, refiners and importers shall use the method provided in § 80.46(a)(1) or one of the alternative test methods listed in § 80.46(a)(3) to measure the sulfur content of gasoline they produce or import.

(2) Except as provided in § 80.350 and in paragraph (c)(1) of this section, any ASTM sulfur test method for liquefied fuels may be used for quality assurance testing under § 80.400, or to determine whether gasoline qualifies for a S-RGAS downstream standard, if the protocols of the ASTM method are followed and the alternative method is correlated to the method provided in § 80.46(a)(1).

(d) *Test method for sulfur in butane*. (1) Refiners and importers shall use the method provided in § 80.46(a)(2) to measure the sulfur content of butane when the butane constitutes a batch of gasoline.

(2) Except as provided in paragraph (d)(1) of this section, any ASTM sulfur test method for gaseous fuels may be used for quality assurance testing under §§ 80.340(b)(4) and 80.400, if the protocols of the ASTM method are followed and the alternative method is correlated to the method provided in § 80.46(a)(2).

(e) *Incorporations by reference*. ASTM standard practices D 4057–95, D 4177–95 and D 5842–95 are incorporated by reference. These incorporations by reference were approved by the Director of the Federal Register in accordance with 5 U.S.C. 552(a) and 1 CFR part 51. Copies may be obtained from the American Society for Testing and Materials, 100 Barr Harbor Dr., West Conshohocken, PA 19428. Copies may be inspected at the Air Docket Section (LE–131), room M–1500, U.S. Environmental Protection Agency, Docket No. A–97–03, 1200 Pennsylvania Ave., NW., Washington, DC 20460, or at the National Archives and Records Administration (NARA). For information on the availability of this material at NARA, call 202–741–6030, or go to: *http://www.archives.gov/federal_register/code_of_federal_regulations/ibr_locations.html*.

[65 FR 6823, Feb. 10, 2000, as amended at 66 FR 19308, Apr. 13, 2001; 68 FR 57820, Oct. 7, 2003]

§ 80.335 What gasoline sample retention requirements apply to refiners and importers?

(a) *Sample retention requirements*. Beginning January 1, 2004, or January 1 of the first year allotments or credits are generated under §§ 80.275 and 80.305, whichever is earlier, any refiner or importer shall:

(1) Collect a representative portion of each sample analyzed under § 80.330(a), of at least 330 ml in volume;

(2) Retain sample portions for the most recent 20 samples collected, or for each sample collected during the most

recent 21 day period, whichever is greater, not to exceed 90 days for any given sample;

(3) Comply with the gasoline sample handling and storage procedures under § 80.330(b) for each sample portion retained; and

(4) Comply with any request by EPA to:

(i) Provide a retained sample portion to the Administrator's authorized representative; and

(ii) Ship a retained sample portion to EPA, within 2 working days of the date of the request, by an overnight shipping service or comparable means, to the address and following procedures specified by EPA, and accompanied with the sulfur test result for the sample determined under § 80.330(a).

(b) *Sample retention requirement for samples subject to independent analysis requirements.* (1) Any refiner or importer who meets the independent analysis requirements under § 80.65(f) for any batch of reformulated gasoline or RBOB will have met the requirements of paragraph (a) of this section, provided the independent laboratory meets the requirements of paragraph (a) of this section for the gasoline batch.

(2) For samples retained by an independent laboratory under paragraph (b) of this section, the test results required to be submitted under paragraph (a) of this section shall be the test results determined under § 80.65(e).

(c) *Sampling compliance certification.* Any refiner or importer shall include with each annual report filed under § 80.370, the following statement, which must accurately reflect the facts and must be signed and dated by the same person who signs the annual report:

I certify that I have made inquiries that are sufficient to give me knowledge of the procedures to collect and store gasoline samples, and I further certify that the procedures meet the requirements of the ASTM procedures required under 40 CFR 80.330.

(d) Prior to January 1, 2004, for purposes of complying with the requirements of this section, refiners who analyze composited samples under § 80.330(a)(3) must retain portions of the composited samples. Portions of samples of each batch comprising the composited samples are not required to be retained.

(e) For purposes of complying with the requirements of this section for RBOB, a sample of each RBOB batch produced plus a sample of the ethanol used to conduct the handblend testing pursuant to § 80.69 must be retained.

[65 FR 6823, Feb. 10, 2000, as amended at 66 FR 19309, Apr. 13, 2001]

§ 80.340 What standards and requirements apply to refiners producing gasoline by blending blendstocks into previously certified gasoline (PCG)?

(a) Any refiner who produces gasoline by blending blendstock into PCG must meet the requirements of § 80.330 to sample and test every batch of gasoline as follows:

(1)(i) Sample and test to determine the volume and sulfur content of the PCG prior to blendstock blending.

(ii) Sample and test to determine the volume and sulfur content of the gasoline subsequent to blendstock blending.

(iii) Calculate the volume and sulfur content of the blendstock, by subtracting the volume and sulfur content of the PCG from the volume and sulfur content of the gasoline subsequent to blendstock blending. The blendstock is a batch for purposes of compliance calculations and reporting. For purposes of this paragraph (a), compliance with the applicable cap standard under § 80.195(a) shall be determined based on the sulfur content of the gasoline subsequent to blendstock blending.

(2) In the alternative, a refiner may sample and test each batch of blendstock when received at the refinery to determine the volume and sulfur content, and treat each blendstock receipt as a separate batch for purposes of compliance calculations for the annual average sulfur standard and for reporting. This alternative applies only if every batch of blendstock used at a refinery during an averaging period has a sulfur content that is equal to, or less than, the applicable per-gallon cap standard under §§ 80.195 or 80.216.

(b) Refiners who blend only butane into PCG may meet the sampling and testing requirements by using sulfur

test results of the butane supplier, provided that the following requirements are also met:

(1) The sulfur content of the butane received from the butane supplier must not exceed the following sulfur standards on a per-gallon basis as follows:

(i) 120 ppm in 2004, and 30 ppm for 2005 and any subsequent year;

(ii) Except that the per-gallon sulfur content of butane blended to PCG that is designated as GPA gasoline shall not exceed 150 ppm from January 1, 2004, through December 31, 2006.

(2) The refiner obtains test results from the butane supplier that demonstrate that the sulfur content of each load of butane supplied does not exceed the applicable per-gallon sulfur standard under paragraph (b)(1) of this section through test results of samples of the butane contained in the storage tank from which the butane blender is supplied.

(i) Testing for the sulfur content of the butane by the supplier must be subsequent to each receipt of butane into the supplier's storage tank, or the testing must be immediately before transfer of butane to the butane blender.

(ii) The testing must be performed by the method specified in § 80.46(a)(2) or by the alternative method specified in § 80.46(a)(4).

(iii) The butane blender must obtain a copy of the butane supplier's test results, at the time of each transfer of butane to the butane blender, that reflect the sulfur content of each load of butane supplied to the butane blender.

(3) The sulfur content and volume of each batch of gasoline produced is that of the butane the refiner blends into gasoline for purposes of calculating compliance with the standards in §§ 80.195 and 80.216.

(4) The refiner must conduct a quality assurance program of sampling and testing for each butane supplier that demonstrates the butane sulfur content does not exceed the applicable per-gallon sulfur standard in paragraph (b)(1) of this section. The frequency of butane sampling and testing, for each butane supplier, must be one sample for every 500,000 gallons of butane received, or one sample every 3 months, whichever results in more frequent sampling.

(5) If any of the requirements of this section are not met, in whole or in part, for any butane blended into gasoline, that butane is deemed in violation of the gasoline sulfur standards in § 80.195 or § 80.216, as applicable.

(c) The procedures in §§ 80.65(i) and 80.101(g)(9) may be applied for purposes of demonstrating compliance with the sulfur standards under this subpart.

[65 FR 6823, Feb. 10, 2000, as amended at 66 FR 67108, Dec. 28, 2001; 68 FR 57820, Oct. 7, 2003]

§ 80.345 [Reserved]

§ 80.350 What alternative sulfur standards and requirements apply to importers who transport gasoline by truck?

Importers who import gasoline into the United States by truck may comply with the following requirements instead of the requirements to sample and test every batch of gasoline under § 80.330, and the annual sulfur average and per-gallon cap standards otherwise applicable to importers under §§ 80.195 and 80.216:

(a) *Alternative standards*. The imported gasoline must comply with the standards in paragraph (a)(1) or (a)(2) of this section as follows:

(1) The applicable average standards, corporate average standards and per-gallon standards under § 80.195(a)(1), except that imported gasoline designated for use in the geographic phase-in area from January 1, 2004, through December 31, 2006 must comply with an average standard of 150 ppm and a per-gallon standard of 300 ppm; or

(2) In 2004, a per-gallon standard of 120 ppm, and in 2005 and subsequent years a per-gallon standard of 30 ppm, except that imported gasoline designated for use in the geographic phase-in area from January 1, 2004, through December 31, 2006 must comply with a per-gallon standard of 150 ppm.

(b) *Terminal testing*. The importer may use test results for sulfur content testing conducted by the terminal operator, for gasoline contained in the storage tank from which trucks used to transport gasoline into the United States are loaded, for purposes of demonstrating compliance with the standards in paragraph (a) of this section,

provided the following conditions are met:

(1) The sampling and testing shall be performed after each receipt of gasoline into the storage tank, or immediately before each transfer of gasoline to the importer's truck.

(2) The sampling and testing shall be performed using the methods specified in § 80.330(b) and § 80.46(a)(1) or one of the alternative test methods listed in § 80.46(a)(3), respectively.

(3) At the time of each transfer of gasoline to the importer's truck for import to the U.S., the importer must obtain a copy of the terminal test result that indicates the sulfur content of the truck load.

(c) *Quality assurance program.* The importer must conduct a quality assurance program, as specified in this paragraph, for each truck loading terminal.

(1) Quality assurance samples must be obtained from the truck-loading terminal and tested by the importer, or by an independent laboratory, and the terminal operator must not know in advance when samples are to be collected.

(2) The sampling and testing must be performed using the methods specified in §§ 80.330(b) and 80.46(a)(1), respectively.

(3) The quality assurance test results for sulfur must differ from the terminal test result by no more than the ASTM reproducibility of the terminal's test results, as determined by the following equation:

$$R = 105 \times ((S+2)/10^4)^{0.4}$$

Where:

R = ASTM reproducibility.

S = Sulfur content based on the terminal's test result.

(4) The frequency of the quality assurance sampling and testing must be at least one sample for each fifty of an importer's trucks that are loaded at a terminal, or one sample per month, whichever is more frequent.

(d) *Party required to conduct quality assurance testing.* The quality assurance program under paragraph (c) of this section shall be conducted by the importer. In the alternative, this testing may be conducted by an independent laboratory that meets the criteria under § 80.65(f)(2)(iii), provided the importer receives, no later than 21 days after the sample was taken, copies of all results of tests conducted.

(e) *Assignment of batch numbers.* The importer must treat each truck load of imported gasoline as a separate batch for purposes of assigning batch numbers and maintaining records under § 80.365, and reporting under § 80.370.

(f) *EPA inspections of terminals.* EPA inspectors or auditors, and auditors conducting attest engagements under § 80.415, must be given full and immediate access to the truck-loading terminal and any laboratory at which samples of gasoline collected at the terminal are analyzed, and must be allowed to conduct inspections, review records, collect gasoline samples, and perform audits. These inspections or audits may be either announced or unannounced.

(g) *Certified Sulfur-FRGAS.* This section does not apply to Certified Sulfur-FRGAS.

(h) *Reporting requirements.* Any importer who elects to comply with the alternative standards in paragraph (a) of this section shall comply with the following requirements:

(1) All importer recordkeeping and reporting requirements under §§ 80.365 and 80.370, except as provided in paragraph (h)(2) of this section.

(2) An importer who elects to comply with the alternative standards in paragraph (a)(2) of this section must certify in the annual report whether it is in compliance with the applicable per-gallon batch standard set forth in paragraph (a)(2) of this section, in lieu of providing the information required by § 80.370(a) regarding annual average sulfur content and compliance with the average standard under § 80.195.

(i) *Effect of noncompliance.* If any of the requirements of this section are not met, all gasoline imported by the truck importer during the time any requirements are not met is deemed in violation of the gasoline sulfur average and per-gallon cap standards in § 80.195 or § 80.216, as applicable. Additionally, if any requirement is not met, EPA may notify the importer of the violation and, if the requirement is not fulfilled within 10 days of notification, the truck importer may not in the future use the sampling and testing provisions

in this section in lieu of the provisions in § 80.330.

[38 FR 1255, Jan. 10, 1973, as amended at 68 FR 57820, Oct. 7, 2003]

§ 80.355 [Reserved]

RECORDKEEPING AND REPORTING REQUIREMENTS

§ 80.360 [Reserved]

§ 80.365 What records must be kept?

(a) *Records that must be kept.* Beginning January 1, 2004, any person who produces, imports, sells, offers for sale, dispenses, distributes, supplies, offers for supply, stores, or transports gasoline, shall keep records that contain the following information:

(1) The product transfer document information required under §§ 80.77, 80.106, 80.210 and 80.219; and

(2) For any sampling and testing for sulfur content required under this subpart:

(i) The location, date, time and storage tank or truck identification for each sample collected;

(ii) The name and title of the person who collected the sample and the person who performed the test;

(iii) The results of the test as originally printed by the testing apparatus, or where no printed result is produced, the results as originally recorded by the person who performed the test; and

(iv) Any record that contains a test result for the sample that is not identical to the result recorded under paragraph (a)(2)(iii) of this section.

(b) *Additional records that refiners and importers must keep.* Beginning January 1, 2004, or January 1 of the first year allotments or credits are generated under § 80.275 or § 80.305, whichever is earlier, any refiner for each of its refineries, and any importer for the gasoline it imports, shall keep records that include the following information:

(1) For each batch of gasoline produced or imported:

(i) The batch volume;

(ii) The batch number assigned under § 80.65(d)(3) and the appropriate designation under paragraph (b)(1)(i) of this section; except that if composite samples of conventional gasoline representing multiple batches produced subsequent to December 31, 2003, are tested under § 80.101(i)(2) for anti-dumping compliance purposes, for purposes of this subpart a separate batch number must be assigned to each batch using the batch numbering procedures under § 80.65(d)(3);

(iii) The date of production or importation; and

(iv) If appropriate, the designation of the batch as GPA gasoline under § 80.219, California gasoline under § 80.375, exempt gasoline for research and development under § 80.380, or for export outside the United States.

(2) Information regarding credits and allotments, separately kept for credits and for allotments; separately kept according to the year of creation for the credits and for the allotments; and for credit generation or use starting in 2004, separately kept for GPA gasoline and other gasoline. Information shall be kept separately for different types of allotments and credits generated under §§ 80.275(e)(1), 80.275(e)(2), 80.305 and 80.310:

(i) The number in the refiner's or importer's possession at the beginning of the averaging period;

(ii) The number generated;

(iii) The number used;

(iv) If any were obtained from or transferred to other parties, for each other party its name, its EPA refiner or importer registration number, and the number obtained from, or transferred to, the other party;

(v) The number that expired at the end of the averaging period;

(vi) The number of allotments, by type, that were converted into credits under § 80.275(e);

(vii) The number in the refiner's or importer's possession that will carry over into the subsequent averaging period; and

(viii) Contracts or other commercial documents that establish each transfer of credits and allotments from the transferor to the transferee.

(3) The calculations used to determine the applicable refiner baseline under § 80.250 or § 80.295.

(4) The calculations used to determine compliance with the applicable sulfur average standards of § 80.195, § 80.216, § 80.240, or § 80.270.

(5) The calculations used to determine the number of credits or allotments generated under § 80.305, § 80.310 or § 80.275.

(6) The calculations used to determine any applicable adjusted cap standard under § 80.195(d).

(7) A copy of all reports submitted to EPA under § 80.370.

(8) In the case of parties who process transmix, records of any sampling and testing required under § 80.213.

(c) *Additional records importers must keep.* Any importer shall keep records that identify and verify the source of each batch of certified Sulfur-FRGAS and non-certified Sulfur-FRGAS imported and demonstrate compliance with the requirements for importers under § 80.410(o).

(d) *Length of time records must be kept.* The records required in this section shall be kept for five years from the date they were created; except that:

(1) *Transfers of credits and allotments.* Records relating to credit and allotment transfers, except as provided in paragraph (d)(2) of this section, shall be kept by the transferor for 5 years from the date the credits or allotments are transferred, and shall be kept by the transferee for 5 years from the date the credits or allotments were transferred, used or terminated, whichever is later.

(2) Early credits and allotments. (i) Where the party generating the credits or allotments does not transfer the credits or allotments, records must be kept for 5 years from the date of creation, use, or termination, whichever is later.

(ii) Where early credits or allotments are transferred, records relating to such credits or allotments shall be kept by both parties for 5 years from the date the credits or allotments were transferred, used, or terminated, whichever is later.

(e) *Make records available to EPA.* On request by EPA the records required in paragraphs (a), (b) and (c) of this section shall be provided to the Administrator's authorized representative. For records that are electronically generated or maintained the equipment and software necessary to read the records shall be made available, or if requested by EPA, electronic records shall be converted to paper documents which shall be provided to the Administrator's authorized representative.

[65 FR 6823, Feb. 10, 2000, as amended at 67 FR 40184, June 12, 2002; 71 FR 31964, June 2, 2006]

§ 80.370 What are the sulfur reporting requirements?

Beginning with the 2004 averaging period, or the first year credits or allotments are generated under § 80.275 or § 80.305, whichever is earlier, and continuing for each averaging period thereafter, any refiner or importer shall submit to EPA annual reports that contain the information required in this section, and such other information as EPA may require.

(a) *Refiner and importer annual reports.* Any refiner, for each of its refineries, and any importer for the gasoline it imports, shall submit a report for each calendar year averaging period that includes the following information, and in the case of a refiner or importer producing or importing both GPA gasoline and other gasoline, the information shall be separately reported:

(1) The EPA importer, or refiner and refinery facility registration numbers;

(2) The applicable baseline, average standard, and adjusted cap standard as follows:

(i) For the years 2000 through 2003, the applicable baseline under § 80.250 or § 80.295.

(ii) For the 2004 averaging period and subsequent averaging periods:

(A) All applicable average standards under § 80.195, § 80.216, § 80.240 or § 80.270;

(B) All applicable adjusted cap standards under § 80.195(d), with the 2005 report identifying both the 2004 and 2005 applicable adjusted cap standards;

(3) The total volume of gasoline produced or imported;

(4) The annual average sulfur level of the gasoline produced or imported;

(5) The annual average sulfur level after inclusion of any credits and allotments;

(6) Information, separately provided, for credits and allotments, and separately by year of creation, as follows:

(i) The number of credits and allotments at the beginning of the averaging period;

(ii) The number of credits and allotments generated;

(iii) The number of credits and allotments used;

(iv) If any credits or allotments were obtained from or transferred to other parties, for each other party its name and EPA refiner or importer registration number, and the number of credits or allotments obtained from or transferred to the other party;

(v) The number of credits and allotments that expired at the end of the averaging period;

(vi) The number of credits and allotments that will carry over into the subsequent averaging period; and

(vii) The number of each type of allotments converted to credits;

(7) For each batch of gasoline produced or imported during the averaging period:

(i) The batch number assigned under § 80.65(d)(3) and the appropriate designation under § 80.365; except that if composite samples of conventional gasoline representing multiple batches produced subsequent to December 31, 2003, are tested under § 80.101(i)(2) for anti-dumping compliance purposes, for purposes of this subpart a separate batch number must be assigned to each batch using the batch numbering procedures under § 80.65(d)(3);

(ii) The date the batch was produced;

(iii) The volume of the batch; and

(iv) The sulfur content of the batch as determined under § 80.330; and

(v) For any batch of small refiner gasoline produced by any refinery with an adjustment of its per-gallon cap standard under § 80.271(a), the number of sulfur credits or allotments required under paragraph (d)(1) of this section, the number of credits or allotments used, and the source(s) of these credits or allotments.

(8) When submitting reports under this paragraph (a), any importer shall exclude certified Sulfur-FRGAS.

(b) *Additional reporting requirements for importers.* Any importer shall report the following information for Sulfur-FRGAS imported during the averaging period:

(1) The EPA refiner and refinery registration numbers of each foreign refiner and refinery where the certified Sulfur-FRGAS was produced; and

(2) The total gallons of certified Sulfur-FRGAS and non-certified Sulfur-FRGAS imported from each foreign refiner and refinery.

(c) *Corporate pool average reports.* (1) Annual reports filed under this section for the 2004 and 2005 averaging periods must include the party's corporate pool average as determined under § 80.205.

(2) If the party submitting the annual report under paragraph (c)(1) of this section is a refiner with more than one refinery or is a refiner who also imports gasoline, then for the purposes of this paragraph, the party shall report the information required for individual refineries and for importers under paragraph (a) of this section, also in the aggregate for all the gasoline produced and imported during the calendar year.

(3) Refiners and importers exempted from corporate pool standards under § 80.216 or § 80.240 are exempt from reporting the information required under paragraphs (c)(1) and (c)(2) of this section.

(4) A parent company must identify in the corporate pool average reports required under paragraph (c)(1) of this section any refinery facilities owned by the parent company, any subsidiaries wholly-owned by the parent company, and any refinery facilities of the parent company's wholly-owned subsidiaries, except as provided in paragraph (c)(5) of this section.

(5) Where the wholly-owned subsidiaries of a parent company comply with the corporate pool average standards individually pursuant to § 80.195(c)(6)(ii):

(i) The corporate pool average reports required under paragraph (c)(1) of this section must be submitted by each wholly-owned subsidiary of the parent company;

(ii) Each wholly-owned subsidiary of the parent company must identify in the corporate pool average reports required under paragraph (c)(1) of this section the subsidiary's parent company and any refinery facilities of the subsidiary; and

(iii) The parent company must submit the corporate pool average reports required under paragraph (c)(1) of this section for any refinery facilities owned by the parent company which

are not the refinery facilities of the parent company's wholly-owned subsidiaries.

(d) *Report submission.* Any annual report required under this section shall be:

(1) Signed and certified as meeting all of the applicable requirements of this subpart by the owner or a responsible corporate officer of the refiner or importer; and

(2) Submitted to EPA no later than the last day of February for the prior calendar year averaging period.

(f) *Attest reports.* Attest reports for refiner and importer attest engagements required under § 80.415 shall be submitted to the Administrator by May 31 of each year for the prior calendar year averaging period.

[65 FR 6823, Feb. 10, 2000, as amended at 67 FR 40184, June 12, 2002]

§§ 80.371–80.373 [Reserved]

EXEMPTIONS

§ 80.374 What if a refiner or importer is unable to produce gasoline conforming to the requirements of this subpart?

In appropriate extreme and unusual circumstances (*e.g.*, natural disaster or Act of God) which are clearly outside the control of the refiner or importer and which could not have been avoided by the exercise of prudence, diligence, and due care, EPA may permit a refiner or importer, for a brief period, to distribute gasoline which does not meet the requirements of this subpart provided the refiner or importer meets all the criteria, requirements and conditions contained in § 80.73 (a) through (e).

§ 80.375 What requirements apply to California gasoline?

(a) *Definition.* For purposes of this subpart *California gasoline* means any gasoline designated by the refiner as for use in California.

(b) *California gasoline exemption.* California gasoline that complies with all the requirements of this section is exempt from all other provisions of this subpart.

(c) *Requirements for California gasoline.* The requirements are:

(1) Each batch of California gasoline must be designated as such by its refiner or importer;

(2) Designated California gasoline must be kept segregated from gasoline that is not California gasoline, at all points in the distribution system;

(3) Designated California gasoline must ultimately be used in the State of California and not used elsewhere;

(4) In the case of California gasoline produced outside the State of California, the transferors and transferees must meet the product transfer document requirements under § 80.81(g); and

(5) Gasoline that is ultimately used in any part of the United States outside of the State of California must comply with the standards and requirements of this subpart, regardless of any designation as California gasoline.

(d) *Use of California test methods and off site sampling procedures.* In the case of any gasoline that is not California gasoline and that is either produced at a refinery located in the State of California or is imported from outside the United States into the State of California, the refiner or importer may, with regard to such gasoline:

(1) Use the sampling and testing methods approved in Title 13 of the California Code of Regulations instead of the sampling and testing methods required under § 80.330; and

(2) Determine the sulfur content of gasoline at off site tankage as permitted in § 80.81(h)(2).

§ 80.380 What are the requirements for obtaining an exemption for gasoline used for research, development or testing purposes?

Any person may request an exemption from the provisions of this subpart for gasoline used for research, development or testing (''R&D'') purposes by submitting to EPA an application that includes all the information listed in paragraph (b) of this section.

(a) *Criteria for an R&D exemption.* For an R&D exemption to be granted, the proposed test program must:

(1) Have a purpose that constitutes an appropriate basis for exemption;

(2) Necessitate the granting of an exemption;

(3) Be reasonable in scope; and

(4) Have a degree of control consistent with the purpose of the program and EPA's monitoring requirements.

(b) *Information required to be submitted.* To demonstrate each of the four elements in paragraphs (a)(1) through (4) of this section, the application required under this section must include the following information:

(1) A statement of the purpose of the program demonstrating that the program has an appropriate R&D purpose.

(2) An explanation of why the stated purpose of the program cannot be achieved in a practicable manner without performing one or more of the prohibited acts under § 80.385.

(3) To demonstrate the reasonableness of the scope of the program:

(i) An estimate of the program's beginning and ending dates;

(ii) An estimate of the maximum number of vehicles and engines involved in the program, and the number of miles and engine hours that will be accumulated on each;

(iii) The sulfur content of the gasoline expected to be used in the program; and

(iv) The quantity of gasoline that exceeds the applicable sulfur standard that is expected to be used in the program.

(4) With regard to control, a demonstration that the program affords EPA a monitoring capability, including at a minimum:

(i) A description of the technical and operational aspects of the program;

(ii) The site(s) of the program (including street address, city, county, State, and ZIP code);

(iii) The manner in which information on vehicles and engines used in the program will be recorded and made available to EPA;

(iv) The manner in which results of the program will be recorded and made available to EPA;

(v) The manner in which information on the gasoline used in the program (including quantity, sulfur content, name, address, telephone number and contact person of the supplier, and the date received from the supplier), will be recorded and made available to EPA;

(vi) The manner in which distribution pumps will be labeled to insure proper use of the gasoline where appropriate;

(vii) The name, address, telephone number and title of the person(s) in the organization requesting an exemption from whom further information on the application may be obtained; and

(viii) The name, address, telephone number and title of the person(s) in the organization requesting an exemption who is responsible for recording and making available the information specified in paragraphs (b)(4)(iii), (iv) and (v) of this section, and the location in which such information will be maintained.

(c) *Additional requirements.* (1) The product transfer documents associated with R&D gasoline must identify the gasoline as such, and must state that the gasoline is to be used only for research, development, or testing purposes.

(2) The R&D gasoline must be designated by the refiner or importer as exempt R&D gasoline.

(3) The R&D gasoline must be kept segregated from non-exempt gasoline at all points in the distribution system of the gasoline.

(4) The R&D gasoline must not be sold, distributed, offered for sale or distribution, dispensed, supplied, offered for supply, transported to or from, or stored by a gasoline retail outlet, or by a wholesale purchaser-consumer facility, unless the wholesale purchaser-consumer facility is associated with the R&D program that uses the gasoline.

(d) *Memorandum of exemption.* The Administrator will grant an R&D exemption upon a demonstration that the requirements of this section have been met. The R&D exemption will be granted in the form of a memorandum of exemption signed by the applicant and the Administrator (or delegate), which may include such terms and conditions as the Administrator determines necessary to monitor the exemption and to carry out the purposes of this section, including restoration of motor vehicle emissions control systems. Any violation of such a term or condition of the exemption or any requirement

under this section will cause the exemption to be void ab initio.

(e) *Effects of exemption.* Gasoline that is subject to an R&D exemption under this section is exempt from other provisions of this subpart provided that the gasoline is used in a manner that complies with the memorandum of exemption granted under paragraph (d) of this section.

§ 80.382 What requirements apply to gasoline for use in American Samoa, Guam and the Commonwealth of the Northern Mariana Islands?

The gasoline sulfur standards of §§ 80.195 and 80.240(a) do not apply to gasoline that is produced, imported, sold, offered for sale, supplied, offered for supply, stored, dispensed, or transported for use in the Territories of Guam, American Samoa or the Commonwealth of the Northern Mariana Islands, provided that such gasoline is:

(a) Designated by the refiner or importer as high sulfur gasoline only for use in Guam, American Samoa, or the Commonwealth of the Northern Mariana Islands;

(b) Used only in Guam, American Samoa, or the Commonwealth of the Northern Mariana Islands;

(c) Accompanied by documentation that complies with the product transfer document requirements of § 80.365; and

(d) Segregated from non-exempt high sulfur fuel at all points in the distribution system from the point the fuel is designated as exempt fuel only for use in Guam, American Samoa, or the Commonwealth of the Northern Mariana Islands, while the exempt fuel is in the United States but outside these Territories.

[71 FR 78093, Dec. 28, 2006]

VIOLATION PROVISIONS

§ 80.385 What acts are prohibited under the gasoline sulfur program?

No person shall:

(a) *Averaging violation.* Produce or import gasoline that does not comply with the applicable sulfur average standard under § 80.195, § 80.216 or § 80.240.

(b) Cap standard violation. Produce, import, sell, offer for sale, dispense, supply, offer for supply, store or transport gasoline that does not comply with the applicable sulfur cap standard under § 80.195, § 80.216, § 80.210, § 80.220, § 80.240, or does not comply with an adjusted cap standard approved for a small refiner under § 80.271.

(c) *Causing an averaging, cap standard, or geographic phase-in area (GPA) use violation.* Cause another person to commit an act in violation of paragraph (a), (b), or (f) of this section.

(d) *Causing violating gasoline to be in the distribution system.* Cause gasoline to be in the distribution system which does not comply with an applicable sulfur cap standard under § 80.195, § 80.210, § 80.216, § 80.220 or § 80.240; a sulfur average standard under § 80.195, § 80.216 or § 80.240; or a GPA use prohibition under § 80.219(c).

(e) *Denatured ethanol violation.* Blend into gasoline denatured ethanol with a sulfur content higher than 30 ppm.

(f) *GPA use violation.* Produce, import, sell, offer for sale, dispense, supply, offer for supply, store or transport gasoline that does not comply with a GPA use prohibition under § 80.219(c).

(g) Failure to use sufficient sulfur credits or allotments to offset a per-gallon cap adjustment. For a small refiner that has an approved adjustment of its per-gallon cap sulfur standard for a refinery under § 80.271, to fail to obtain (or generate) and use the required number of sulfur credits or allotments to offset the revised per-gallon cap sulfur standard under § 80.217(d).

[65 FR 6823, Feb. 10, 2000, as amended at 67 FR 40184, June 12, 2002]

§ 80.390 What evidence may be used to determine compliance with the prohibitions and requirements of this subpart and liability for violations of this subpart?

(a) Compliance with the sulfur standards of this subpart shall be determined based on the sulfur level of the gasoline, measured using the methodologies specified in §§ 80.330(b) and 80.46(a). Any evidence or information, including the exclusive use of such evidence or information, may be used to establish the sulfur level of gasoline if the evidence or information is relevant

to whether the sulfur level of gasoline would have been in compliance with the standards if the appropriate sampling and testing methodology had been correctly performed. Such evidence may be obtained from any source or location and may include, but is not limited to, test results using methods other than those specified in §§ 80.330(b) and 80.46(a), business records, and commercial documents.

(b) Determinations of compliance with the requirements of this subpart other than the sulfur standards, and determinations of liability for any violation of this subpart, may be based on information obtained from any source or location. Such information may include, but is not limited to, business records and commercial documents.

§ 80.395 Who is liable for violations under the gasoline sulfur program?

(a) *Persons liable for violations of prohibited acts*—(1) *Averaging violation*. Any refiner or importer who violates § 80.385(a) is liable for the violation.

(2) *Causing an averaging violation*. Any refiner, importer, distributor, reseller, carrier, retailer, wholesale purchaser-consumer, or oxygenate blender who causes another party to violate § 80.385(a), is liable for a violation of § 80.385(c).

(3) *Cap standard violation*. Any refiner, importer, distributor, reseller, carrier, retailer, wholesale purchaser-consumer, or oxygenate blender who owned, leased, operated, controlled or supervised a facility where a violation of § 80.385 (b) occurred, is deemed in violation of § 80.385(b).

(4) *Causing a cap standard violation*. Any refiner, importer, distributor, reseller, carrier, retailer, wholesale purchaser-consumer, or oxygenate blender who produced, imported, sold, offered for sale, dispensed, supplied, offered for supply, stored, transported, or caused the transportation or storage of gasoline that violates § 80.385(b), is deemed in violation of § 80.385(c).

(5) GPA use violation. Any refiner, importer, distributor, reseller, carrier, retailer, wholesale purchaser-consumer, or oxygenate blender who owned, leased, operated, controlled or supervised a facility where a violation of § 80.385(f) occurred, is deemed in violation of § 80.385(f).

(6) Causing a GPA use violation. Any refiner, importer, distributor, reseller, carrier, retailer, wholesale purchaser-consumer, or oxygenate blender who produced, imported, sold, offered for sale, dispensed, supplied, offered for supply, stored, transported, or caused the transportation or storage of gasoline that violates § 80.385(f), is deemed in violation of § 80.385(c).

(7) *Branded refiner/importer liability*. Any refiner or importer whose corporate, trade, or brand name, or whose marketing subsidiary's corporate, trade, or brand name appeared at a facility where a violation of § 80.385(b) or (f) occurred, is deemed in violation of § 80.385(b) or (f), as applicable.

(8) *Causing violating gasoline to be in the distribution system*. Any refiner, importer, distributor, reseller, carrier, or oxygenate blender, who owned, leased, operated, controlled or supervised a facility from which gasoline was released into the distribution system which does not comply with an applicable sulfur cap standard, a sulfur averaging standard, or a GPA use prohibition, is deemed in violation of § 80.385(d).

(9) *Carrier causation*. In order for a carrier to be liable under paragraph (a)(2), (4), (6), or (8) of this section, EPA must demonstrate, by reasonably specific showing by direct or circumstantial evidence, that the carrier caused the violation.

(10) *Denatured ethanol violation*. Any oxygenate blender who violates § 80.385(e) is liable for the violation.

(11) *Parent corporation liability*. Any parent corporation is liable for any violations of this subpart that are committed by any of its wholly-owned subsidiaries.

(12) Joint venture and joint owner liability. Each partner to a joint venture, or each owner of a facility owned by two or more owners, is jointly and severally liable for any violation of this subpart that occurs at the joint venture facility or facility owned by the joint owners, or is committed by the joint venture operation or any of the joint owners of the facility.

(13) Failure to use credits violation. Any small refiner that has an approved adjustment of its per-gallon cap under

§ 80.271 and that does not obtain (or generate) and use the required number of sulfur credits or allotments under § 80.271(d) by the time it submits its annual report under § 80.370 is deemed in violation of § 80.385(g).

(b) *Persons liable for failure to meet other provisions of this subpart.* (1) Any refiner, importer, distributor, reseller, carrier, wholesale purchaser-consumer, retailer, or oxygenate blender who fails to meet a provision of this subpart not addressed in paragraph (a) of this section is liable for a violation of that provision.

(2) Any refiner, importer, distributor, reseller, carrier, wholesale purchaser-consumer, retailer, or oxygenate blender who caused another person to fail to meet a requirement of this subpart not addressed in paragraph (a) of this section, is liable for causing a violation of that provision.

[65 FR 6823, Feb. 10, 2000, as amended at 67 FR 40184, June 12, 2002]

§ 80.400 What defenses apply to persons deemed liable for a violation of a prohibited act?

(a) Any person deemed liable for a violation of a prohibition under § 80.395 (a)(3) through (8), will not be deemed in violation if the person demonstrates that:

(1) The violation was not caused by the person or the person's employee or agent; and

(2) The person conducted a quality assurance sampling and testing program, as described in paragraph (d) of this section. A carrier may rely on the quality assurance program carried out by another party, including the party who owns the gasoline in question, provided that the quality assurance program is carried out properly. Retailers and wholesale purchaser-consumers are not required to conduct quality assurance programs.

(b) In the case of a violation found at a facility operating under the corporate, trade or brand name of a refiner or importer, or a refiner's or importer's marketing subsidiary, the refiner or importer must show, in addition to the defense elements required under paragraphs (a)(1) and (2) of this section, that the violation was caused by:

(1) An act in violation of law (other than the Clean Air Act or this part 80), or an act of sabotage or vandalism;

(2) The action of any refiner, importer, retailer, distributor, reseller, oxygenate blender, carrier, retailer or wholesale purchaser-consumer in violation of a contractual agreement between the branded refiner or importer and the person designed to prevent such action, and despite periodic sampling and testing by the branded refiner or importer to ensure compliance with such contractual obligation; or

(3) The action of any carrier or other distributor not subject to a contract with the refiner or importer, but engaged for transportation of gasoline, despite specifications or inspections of procedures and equipment which are reasonably calculated to prevent such action.

(c) Under paragraph (a) of this section for any person to show that a violation was not caused by that person, or under paragraph (b) of this section to show that a violation was caused by any of the specified actions, the person must demonstrate by reasonably specific showing, by direct or circumstantial evidence, that the violation was caused or must have been caused by another person and that the person asserting the defense did not contribute to that other person's causation.

(d) *Quality assurance and testing program.* To demonstrate an acceptable quality assurance and testing program under paragraph (a)(2) of this section, a person must present evidence of the following:

(1) A periodic sampling and testing program to ensure the gasoline the person sold, dispensed, supplied, stored, or transported, meets the applicable sulfur standard; and

(2) On each occasion when gasoline is found not in compliance with the applicable sulfur standard:

(i) The person immediately ceases selling, offering for sale, dispensing, supplying, offering for supply, storing or transporting the non-complying product; and

(ii) The person promptly remedies the violation and the factors that caused the violation (for example, by removing the non-complying product from the distribution system until the

applicable standard is achieved and taking steps to prevent future violations of a similar nature from occurring).

(3) For any carrier who transports gasoline in a tank truck, the quality assurance program required under this paragraph (d) need not include periodic sampling and testing of gasoline in the tank truck, but in lieu of such tank truck sampling and testing, the carrier shall demonstrate evidence of an oversight program for monitoring compliance with the requirements of this subpart relating to the transport or storage of gasoline by tank truck, such as appropriate guidance to drivers regarding compliance with the applicable sulfur standard and product transfer document requirements, and the periodic review of records received in the ordinary course of business concerning gasoline quality and delivery.

§ 80.405 What penalties apply under this subpart?

(a) Any person liable for a violation under § 80.395 is subject to civil penalties as specified in section 205 of the Clean Air Act for every day of each such violation and the amount of economic benefit or savings resulting from each violation.

(b) Any person liable under § 80.395(a)(1) or (2) for a violation of the applicable sulfur averaging standard or causing another party to violate that standard during any averaging period, is subject to a separate day of violation for each and every day in the averaging period. Any person liable under § 80.395(b) for a failure to fulfill any requirement for credit or allotment generation, transfer, use, banking, or deficit correction, is subject to a separate day of violation for each and every day in the averaging period in which invalid credits or allotments are generated or used.

(c)(1) Any person liable under § 80.395(a)(3), (4), (5), or (6) for a violation of an applicable sulfur per gallon cap standard under § 80.195, § 80.210, § 80.216, § 80.220 or § 80.240, a GPA use prohibition under § 80.219(c), or of causing another party to violate a cap standard or a GPA use prohibition, is subject to a separate day of violation for each and every day the non-complying gasoline remains any place in the gasoline distribution system.

(2) Any person liable under § 80.395(a)(8) for causing gasoline to be in the distribution system which does not comply with an applicable sulfur cap standard, a sulfur averaging standard, or a GPA use prohibition, is subject to a separate day of violation for each and every day that the non-complying gasoline remains any place in the gasoline distribution system.

(3) For purposes of paragraph (c) of this section, the length of time the gasoline in question remained in the gasoline distribution system is deemed to be twenty-five days, unless a person subject to liability or EPA demonstrates by reasonably specific showings, by direct or circumstantial evidence, that the non-complying gasoline remained in the gasoline distribution system for fewer than or more than twenty-five days.

(d) Any person liable under § 80.395(b) for failure to meet, or causing a failure to meet, a provision of this subpart is liable for a separate day of violation for each and every day such provision remains unfulfilled.

(e) Any person liable under § 80.395(a)(13) for failing to obtain (or generate) and use the total required number of sulfur credits or allotments under § 80.271(d) for a calendar year is subject to a separate day of violation for each day until the required number of credits or allotments is used.

[65 FR 6823, Feb. 10, 2000, as amended at 67 FR 40185, June 12, 2002]

PROVISIONS FOR FOREIGN REFINERS WITH INDIVIDUAL SULFUR BASELINES

§ 80.410 What are the additional requirements for gasoline produced at foreign refineries having individual small refiner sulfur baselines, foreign refineries granted temporary relief under § 80.270, or baselines for generating credits during 2000 through 2003?

(a) *Definitions.* (1) A foreign refinery is a refinery that is located outside the United States, the Commonwealth of Puerto Rico, the Virgin Islands, Guam, American Samoa, and the Commonwealth of the Northern Mariana Islands (collectively referred to in this section as ''the United States'').

(2) A foreign refiner is a person who meets the definition of refiner under § 80.2(i) for a foreign refinery.

(3) A small foreign refiner is a refiner that meets the definition of a small refiner under § 80.225.

(4) ''Sulfur-FRGAS'' means gasoline produced at a foreign refinery that has been assigned an individual refinery sulfur baseline under §§ 80.250 or 80.295, or has been granted temporary relief under § 80.270, and that is imported into the United States.

(5) ''Non-Sulfur-FRGAS'' means gasoline that is produced at a foreign refinery that has not been assigned an individual refinery sulfur baseline, gasoline produced at a foreign refinery with an individual refinery sulfur baseline that is not imported into the United States, and gasoline produced at a foreign refinery with an individual sulfur baseline during a year when the foreign refiner has opted to not participate in the Sulfur-FRGAS program under paragraph (c)(3) of this section.

(6) ''Certified Sulfur-FRGAS'' means Sulfur-FRGAS the foreign refiner intends to include in the foreign refinery's sulfur compliance calculations under § 80.205 pursuant to § 80.240 or § 80.270 or credit calculations under §§ 80.305 or 80.310 and allotment calculations under § 80.275(a), and does include in these compliance calculations when reported to EPA.

(7) ''Non-Certified Sulfur-FRGAS'' means Sulfur-FRGAS that is not Certified Sulfur-FRGAS.

(b) *Baseline establishment*. Any foreign refiner who does not have an approved refinery baseline under § 80.94 may submit a petition to the Administrator for an individual refinery sulfur baseline pursuant to §§ 80.245 and 80.250, a baseline for generating credits or allotments under §§ 80.290 and 80.295, or a baseline for temporary refinery relief under §§ 80.270 and 80.295.

(1) The refiner shall follow the procedures specified in §§ 80.91 through 80.93 to establish the volume and sulfur content of gasoline that was produced at the foreign refinery and imported into the United States during 1997 and 1998 for purposes of establishing baselines under § 80.250 or § 80.295.

(2) In making determinations for foreign refinery baselines EPA will consider all information supplied by a foreign refiner, and in addition may rely on any and all appropriate assumptions necessary to make such determinations.

(3) Where a foreign refiner submits a petition that is incomplete or inadequate to establish an accurate baseline, and the refiner fails to cure this defect after a request for more information, EPA will not assign an individual refinery sulfur baseline.

(c) *General requirements for foreign refiners with individual refinery sulfur baselines*. A foreign refiner of a refinery that has been assigned an individual sulfur baseline under § 80.250 or § 80.295 must designate all gasoline produced at the foreign refinery that is exported to the United States as either Certified Sulfur-FRGAS or as Non-Certified Sulfur-FRGAS, except as provided in paragraph (c)(3) of this section.

(1) In the case of Certified Sulfur-FRGAS, the foreign refiner must meet all provisions that apply to refiners under this subpart H.

(2) In the case of Non-Certified Sulfur-FRGAS, the foreign refiner shall meet all the following provisions, except the foreign refiner shall substitute the name Non-Certified Sulfur-FRGAS for the names ''reformulated gasoline'' or ''RBOB'' wherever they appear in the following provisions:

(i) The designation requirements in this section;

(ii) The recordkeeping requirements under § 80.365;

(iii) The reporting requirements in § 80.370 and this section;

(iv) The product transfer document requirements in this section;

(v) The prohibitions in this section and § 80.385; and

(vi) The independent audit requirements under § 80.415, paragraph (h) of this section, §§ 80.125 through 80.127, § 80.128(a),(b),(c),(g) through (i), and § 80.130.

(3)(i) Any foreign refiner that generates sulfur credits under § 80.305 during the period 2000 through 2003, or allotments under § 80.275(a) during 2003, and any small refiner generating credits under § 80.310, shall designate all Sulfur-FRGAS as Certified Sulfur-FRGAS for any year that such credits are generated.

(ii) Any foreign refiner that has been assigned an individual sulfur baseline for a foreign refinery under § 80.250 or § 80.295 may elect to classify no gasoline imported into the United States as Sulfur-FRGAS, provided the foreign refiner notifies EPA of the election no later than November 1 of the prior calendar year.

(iii) An election under paragraph (c)(3)(ii) of this section shall:

(A) Apply to an entire calendar year averaging period, and apply to all gasoline produced during the calendar year at the foreign refinery that is used in the United States; and

(B) Remain in effect for each succeeding calendar year averaging period, unless and until the foreign refiner notifies EPA of a termination of the election. The change in election shall take effect at the beginning of the next calendar year.

(d) *Designation, product transfer documents, and foreign refiner certification.* (1) Any foreign refiner of a foreign refinery that has been assigned an individual sulfur baseline must designate each batch of Sulfur-FRGAS as such at the time the gasoline is produced, unless the refinery has elected to classify no gasoline exported to the United States as Sulfur-FRGAS under paragraph (c)(3)(ii) of this section.

(2) On each occasion when any person transfers custody or title to any Sulfur-FRGAS prior to its being imported into the United States, it must include the following information as part of the product transfer document information in this section:

(i) Identification of the gasoline as Certified Sulfur-FRGAS or as Non-Certified Sulfur-FRGAS; and

(ii) The name and EPA refinery registration number of the refinery where the Sulfur-FRGAS was produced.

(3) On each occasion when Sulfur-FRGAS is loaded onto a vessel or other transportation mode for transport to the United States, the foreign refiner shall prepare a certification for each batch of the Sulfur-FRGAS that meets the following requirements:

(i) The certification shall include the report of the independent third party under paragraph (f) of this section, and the following additional information:

(A) The name and EPA registration number of the refinery that produced the Sulfur-FRGAS;

(B) The identification of the gasoline as Certified Sulfur-FRGAS or Non-Certified Sulfur-FRGAS;

(C) The volume of Sulfur-FRGAS being transported, in gallons;

(D) In the case of Certified Sulfur-FRGAS:

(*1*) The sulfur content as determined under paragraph (f) of this section; and

(*2*) A declaration that the Sulfur-FRGAS is being included in the compliance calculations under § 80.205 or credit calculations under § 80.305 or allotments under § 80.275(a) for the refinery that produced the Sulfur-FRGAS.

(ii) The certification shall be made part of the product transfer documents for the Sulfur-FRGAS. Prior to 2004, the information required under paragraph (d)(3)(i)(D)(*1*) of this section may be omitted from the product transfer documents that accompany the gasoline, provided that such information is provided to the United States importer prior to collection of the representative sample required under paragraph (o)(3)(ii)(A) of this section.

(e) *Transfers of Sulfur-FRGAS to non-United States markets.* The foreign refiner is responsible to ensure that all gasoline classified as Sulfur-FRGAS is imported into the United States. A foreign refiner may remove the Sulfur-FRGAS classification, and the gasoline need not be imported into the United States, but only if:

(1)(i) The foreign refiner excludes:

(A) The volume of gasoline from the refinery's compliance calculations under § 80.205; and

(B) In the case of Certified Sulfur-FRGAS, the volume and sulfur content of the gasoline from the compliance calculations under § 80.205 or credit calculations under § 80.305.

(ii) The exclusions under paragraph (e)(1)(i) of this section shall be on the basis of the sulfur content and volumes determined under paragraph (f) of this section; and

(2) The foreign refiner obtains sufficient evidence in the form of documentation that the gasoline was not imported into the United States.

(f) *Load port independent sampling, testing and refinery identification.* (1) On

each occasion Sulfur-FRGAS is loaded onto a vessel for transport to the United States a foreign refiner shall have an independent third party:

(i) Inspect the vessel prior to loading and determine the volume of any tank bottoms;

(ii) Determine the volume of Sulfur-FRGAS loaded onto the vessel (exclusive of any tank bottoms present before vessel loading);

(iii) Obtain the EPA-assigned registration number of the foreign refinery;

(iv) Determine the name and country of registration of the vessel used to transport the Sulfur-FRGAS to the United States; and

(v) Determine the date and time the vessel departs the port serving the foreign refinery.

(2) On each occasion Certified Sulfur-FRGAS is loaded onto a vessel for transport to the United States a foreign refiner shall have an independent third party:

(i) Collect a representative sample of the Certified Sulfur-FRGAS from each vessel compartment subsequent to loading on the vessel and prior to departure of the vessel from the port serving the foreign refinery;

(ii) Prepare a volume-weighted vessel composite sample from the compartment samples, and determine the value for sulfur in accordance with the methodology and requirements specified in § 80.330, by:

(A) The third party analyzing the sample; or

(B) The third party observing the foreign refiner analyze the sample;

(iii) Review original documents that reflect movement and storage of the certified Sulfur-FRGAS from the refinery to the load port, and from this review determine:

(A) The refinery at which the Sulfur-FRGAS was produced; and

(B) That the Sulfur-FRGAS remained segregated from:

(*1*) Non-Sulfur-FRGAS and Non-Certified Sulfur-FRGAS; and

(*2*) Other Certified Sulfur-FRGAS produced at a different refinery.

(3) The independent third party shall submit a report:

(i) To the foreign refiner containing the information required under paragraphs (f)(1) and (2) of this section, to accompany the product transfer documents for the vessel; and

(ii) To the Administrator containing the information required under paragraphs (f)(1) and (2) of this section, within thirty days following the date of the independent third party's inspection. This report shall include a description of the method used to determine the identity of the refinery at which the gasoline was produced, assurance that the gasoline remained segregated as specified in paragraph (n)(1) of this section, and a description of the gasoline's movement and storage between production at the source refinery and vessel loading.

(4) The independent third party must:

(i) Be approved in advance by EPA, based on a demonstration of ability to perform the procedures required in this paragraph (f);

(ii) Be independent under the criteria specified in § 80.65(f)(2)(iii); and

(iii) Sign a commitment that contains the provisions specified in paragraph (i) of this section with regard to activities, facilities and documents relevant to compliance with the requirements of this paragraph (f).

(g) *Comparison of load port and port of entry testing.* (1)(i) Except as described in paragraph (g)(1)(ii) of this section, any foreign refiner and any United States importer of Certified Sulfur-FRGAS shall compare the results from the load port testing under paragraph (f) of this section, with the port of entry testing as reported under paragraph (o) of this section, for the volume of gasoline and the sulfur value.

(ii) Where a vessel transporting Certified Sulfur-FRGAS off loads this gasoline at more than one United States port of entry, and the conditions of paragraph (g)(2)(i) of this section are met at the first United States port of entry, the requirements of paragraph (g)(2) of this section do not apply at subsequent ports of entry if the United States importer obtains a certification from the vessel owner, that meets the requirements of paragraph (s) of this section, that the vessel has not loaded any gasoline or blendstock between the first United States port of entry and the subsequent port of entry.

(2)(i) The requirements of this paragraph (g)(2) apply if:

(A) The temperature-corrected volumes determined at the port of entry and at the load port differ by more than one percent; or

(B) The sulfur value determined at the port of entry is higher than the sulfur value determined at the load port, and the amount of this difference is greater than the reproducibility amount specified for the port of entry test result by the American Society of Testing and Materials (ASTM).

(ii) The United States importer and the foreign refiner shall treat the gasoline as Non-Certified Sulfur-FRGAS, and the foreign refiner shall exclude the gasoline volume and properties from its gasoline sulfur compliance calculations under § 80.205.

(h) *Attest requirements*. The following additional procedures shall be carried out by any foreign refiner of Sulfur-FRGAS as part of the applicable attest engagement for each foreign refinery under § 80.415:

(1) The inventory reconciliation analysis under § 80.128(b) and the tender analysis under § 80.128(c) shall include Non-Sulfur-FRGAS in addition to the gasoline types listed in § 80.128(b) and (c).

(2) Obtain separate listings of all tenders of Certified Sulfur-FRGAS, and of Non-Certified Sulfur-FRGAS. Agree the total volume of tenders from the listings to the gasoline inventory reconciliation analysis in § 80.128(b), and to the volumes determined by the third party under paragraph (f)(1) of this section.

(3) For each tender under paragraph (h)(2) of this section where the gasoline is loaded onto a marine vessel, report as a finding the name and country of registration of each vessel, and the volumes of Sulfur-FRGAS loaded onto each vessel.

(4) Select a sample from the list of vessels identified in paragraph (h)(3) of this section used to transport Certified Sulfur-FRGAS, in accordance with the guidelines in § 80.127, and for each vessel selected perform the following:

(i) Obtain the report of the independent third party, under paragraph (f) of this section, and of the United States importer under paragraph (o) of this section.

(A) Agree the information in these reports with regard to vessel identification, gasoline volumes and test results.

(B) Identify, and report as a finding, each occasion the load port and port of entry parameter and volume results differ by more than the amounts allowed in paragraph (g) of this section, and determine whether the foreign refiner adjusted its refinery calculations as required in paragraph (g) of this section.

(ii) Obtain the documents used by the independent third party to determine transportation and storage of the Certified Sulfur-FRGAS from the refinery to the load port, under paragraph (f) of this section. Obtain tank activity records for any storage tank where the Certified Sulfur-FRGAS is stored, and pipeline activity records for any pipeline used to transport the Certified Sulfur-FRGAS, prior to being loaded onto the vessel. Use these records to determine whether the Certified Sulfur-FRGAS was produced at the refinery that is the subject of the attest engagement, and whether the Certified Sulfur-FRGAS was mixed with any Non-Certified Sulfur-FRGAS, Non-Sulfur-FRGAS, or any Certified Sulfur-FRGAS produced at a different refinery.

(5)(i) Select a sample from the list of vessels identified in paragraph (h)(3) of this section used to transport certified and Non-Certified Sulfur-FRGAS, in accordance with the guidelines in § 80.127, and for each vessel selected perform the following:

(ii) Obtain a commercial document of general circulation that lists vessel arrivals and departures, and that includes the port and date of departure of the vessel, and the port of entry and date of arrival of the vessel. Agree the vessel's departure and arrival locations and dates from the independent third party and United States importer reports to the information contained in the commercial document.

(6) Obtain separate listings of all tenders of Non-Sulfur-FRGAS, and perform the following:

(i) Agree the total volume of tenders from the listings to the gasoline inventory reconciliation analysis in § 80.128(b).

(ii) Obtain a separate listing of the tenders under paragraph (h)(6) of this section where the gasoline is loaded onto a marine vessel. Select a sample from this listing in accordance with the guidelines in § 80.127, and obtain a commercial document of general circulation that lists vessel arrivals and departures, and that includes the port and date of departure and the ports and dates where the gasoline was off loaded for the selected vessels. Determine and report as a finding the country where the gasoline was off loaded for each vessel selected.

(7) In order to complete the requirements of this paragraph (h) an auditor shall:

(i) Be independent of the foreign refiner;

(ii) Be licensed as a Certified Public Accountant in the United States and a citizen of the United States, or be approved in advance by EPA based on a demonstration of ability to perform the procedures required in §§ 80.125 through 80.130, § 80.415 and this paragraph (h); and

(iii) Sign a commitment that contains the provisions specified in paragraph (i) of this section with regard to activities and documents relevant to compliance with the requirements of §§ 80.125 through 80.130, § 80.415 and this paragraph (h).

(i) *Foreign refiner commitments.* Any foreign refiner shall commit to and comply with the provisions contained in this paragraph (i) as a condition to being assigned an individual refinery sulfur baseline.

(1) Any United States Environmental Protection Agency inspector or auditor will be given full, complete and immediate access to conduct inspections and audits of the foreign refinery.

(i) Inspections and audits may be either announced in advance by EPA, or unannounced.

(ii) Access will be provided to any location where:

(A) Gasoline is produced;

(B) Documents related to refinery operations are kept;

(C) Gasoline or blendstock samples are tested or stored; and

(D) Sulfur-FRGAS is stored or transported between the foreign refinery and the United States, including storage tanks, vessels and pipelines.

(iii) Inspections and audits may be by EPA employees or contractors to EPA.

(iv) Any documents requested that are related to matters covered by inspections and audits will be provided to an EPA inspector or auditor on request.

(v) Inspections and audits by EPA may include review and copying of any documents related to:

(A) Refinery baseline establishment, including the volume and sulfur content, and transfers of title or custody, of any gasoline or blendstocks, whether Sulfur-FRGAS or Non-Sulfur-FRGAS, produced at the foreign refinery during the period January 1, 1997 through the date of the refinery baseline petition or through the date of the inspection or audit if a baseline petition has not been approved, and any work papers related to refinery baseline establishment;

(B) The volume and sulfur content of Sulfur-FRGAS;

(C) The proper classification of gasoline as being Sulfur-FRGAS or as not being Sulfur-FRGAS, or as Certified Sulfur-FRGAS or as Non-Certified Sulfur-FRGAS;

(D) Transfers of title or custody to Sulfur-FRGAS;

(E) Sampling and testing of Sulfur-FRGAS;

(F) Work performed and reports prepared by independent third parties and by independent auditors under the requirements of this section and § 80.415 including work papers; and

(G) Reports prepared for submission to EPA, and any work papers related to such reports.

(vi) Inspections and audits by EPA may include taking samples of gasoline or blendstock, and interviewing employees.

(vii) Any employee of the foreign refiner will be made available for interview by the EPA inspector or auditor, on request, within a reasonable time period.

(viii) English language translations of any documents will be provided to

an EPA inspector or auditor, on request, within 10 working days.

(ix) English language interpreters will be provided to accompany EPA inspectors and auditors, on request.

(2) An agent for service of process located in the District of Columbia will be named, and service on this agent constitutes service on the foreign refiner or any employee of the foreign refiner for any action by EPA or otherwise by the United States related to the requirements of this subpart H.

(3) The forum for any civil or criminal enforcement action related to the provisions of this section for violations of the Clean Air Act or regulations promulgated thereunder shall be governed by the Clean Air Act, including the EPA administrative forum where allowed under the Clean Air Act.

(4) United States substantive and procedural laws shall apply to any civil or criminal enforcement action against the foreign refiner or any employee of the foreign refiner related to the provisions of this section.

(5) Submitting a petition for an individual refinery sulfur baseline, producing and exporting gasoline under an individual refinery sulfur baseline, and all other actions to comply with the requirements of this subpart H relating to the establishment and use of an individual refinery sulfur baseline constitute actions or activities that satisfy the provisions of 28 U.S.C. section 1605(a)(2), but solely with respect to actions instituted against the foreign refiner, its agents and employees in any court or other tribunal in the United States for conduct that violates the requirements applicable to the foreign refiner under this subpart H, including conduct that violates Title 18 U.S.C. section 1001 and Clean Air Act section 113(c)(2).

(6) The foreign refiner, or its agents or employees, will not seek to detain or to impose civil or criminal remedies against EPA inspectors or auditors, whether EPA employees or EPA contractors, for actions performed within the scope of EPA employment related to the provisions of this section.

(7) The commitment required by this paragraph (i) shall be signed by the owner or president of the foreign refiner business.

(8) In any case where Sulfur-FRGAS produced at a foreign refinery is stored or transported by another company between the refinery and the vessel that transports the Sulfur-FRGAS to the United States, the foreign refiner shall obtain from each such other company a commitment that meets the requirements specified in paragraphs (i)(1) through (7) of this section, and these commitments shall be included in the foreign refiner's baseline petition.

(j) *Sovereign immunity*. By submitting a petition for an individual foreign refinery baseline under this section, or by producing and exporting gasoline to the United States under an individual refinery sulfur baseline under this section, the foreign refiner, its agents and employees, without exception, become subject to the full operation of the administrative and judicial enforcement powers and provisions of the United States without limitation based on sovereign immunity, with respect to actions instituted against the foreign refiner, its agents and employees in any court or other tribunal in the United States for conduct that violates the requirements applicable to the foreign refiner under this subpart H, including conduct that violates Title 18 U.S.C. section 1001 and Clean Air Act section 113(c)(2).

(k) *Bond posting*. Any foreign refiner shall meet the requirements of this paragraph (k) as a condition to being assigned an individual refinery sulfur baseline.

(1) The foreign refiner shall post a bond of the amount calculated using the following equation:

$$\text{Bond}=G\times\$\ 0.01$$

where:

Bond=amount of the bond in U. S. dollars.

G=the largest volume of gasoline produced at the foreign refinery and exported to the United States, in gallons, during a single calendar year among the most recent of the following calendar years, up to a maximum of five calendar years: the calendar year immediately preceding the date the baseline petition is submitted, the calendar year the baseline petition is submitted, and each succeeding calendar year.

(2) Bonds shall be posted by:

(i) Paying the amount of the bond to the Treasurer of the United States;

(ii) Obtaining a bond in the proper amount from a third party surety agent that is payable to satisfy United States administrative or judicial judgments against the foreign refiner, provided EPA agrees in advance as to the third party and the nature of the surety agreement; or

(iii) An alternative commitment that results in assets of an appropriate liquidity and value being readily available to the United States, provided EPA agrees in advance as to the alternative commitment.

(3) If the bond amount for a foreign refinery increases, the foreign refiner shall increase the bond to cover the shortfall within 90 days of the date the bond amount changes. If the bond amount decreases, the foreign refiner may reduce the amount of the bond beginning 90 days after the date the bond amount changes.

(4) Bonds posted under this paragraph (k) shall:

(i) Be used to satisfy any judicial judgment that results from an administrative or judicial enforcement action for conduct in violation of this subpart H, including where such conduct violates Title 18 U.S.C. section 1001 and Clean Air Act section 113(c)(2);

(ii) Be provided by a corporate surety that is listed in the United States Department of Treasury Circular 570 ''Companies Holding Certificates of Authority as Acceptable Sureties on Federal Bonds and Acceptable Reinsuring Companies'' (Available from the U.S. Department of the Treasury, Financial Management Service, Surety Bond Branch, 3700 East-West Highway, Room 6A04, Hyattsville, Md. 20782. Also available on the internet at *http://www.fms.treas.gov/c570/c570.html*); and

(iii) Include a commitment that the bond will remain in effect for at least five (5) years following the end of latest averaging period that the foreign refiner produces gasoline pursuant to the requirements of this Subpart H.

(5) On any occasion a foreign refiner bond is used to satisfy any judgment, the foreign refiner shall increase the bond to cover the amount used within 90 days of the date the bond is used.

(l) [Reserved]

(m) *English language reports.* Any report or other document submitted to EPA by any foreign refiner shall be in English language, or shall include an English language translation.

(n) *Prohibitions.* (1) No person may combine Certified Sulfur-FRGAS with any Non-Certified Sulfur-FRGAS or Non-Sulfur-FRGAS, and no person may combine Certified Sulfur-FRGAS with any Certified Sulfur-FRGAS produced at a different refinery, until the importer has met all the requirements of paragraph (o) of this section, except as provided in paragraph (e) of this section.

(2) No foreign refiner or other person may cause another person to commit an action prohibited in paragraph (n)(1) of this section, or that otherwise violates the requirements of this section.

(o) *United States importer requirements.* Any United States importer shall meet the following requirements:

(1) Each batch of imported gasoline shall be classified by the importer as being Sulfur-FRGAS or as Non-Sulfur-FRGAS, and each batch classified as Sulfur-FRGAS shall be further classified as Certified Sulfur-FRGAS or as Non-certified Sulfur-FRGAS.

(2) Gasoline shall be classified as Certified Sulfur-FRGAS or as Non-Certified Sulfur-FRGAS according to the designation by the foreign refiner if this designation is supported by product transfer documents prepared by the foreign refiner as required in paragraph (d) of this section, unless the gasoline is classified as Non-Certified Sulfur-FRGAS under paragraph (g) of this section.

(3) For each gasoline batch classified as Sulfur-FRGAS, any United States importer shall perform the following procedures:

(i) In the case of both Certified and Non-Certified Sulfur-FRGAS, have an independent third party:

(A) Determine the volume of gasoline in the vessel;

(B) Use the foreign refiner's Sulfur-FRGAS certification to determine the name and EPA-assigned registration number of the foreign refinery that produced the Sulfur-FRGAS;

(C) Determine the name and country of registration of the vessel used to transport the Sulfur-FRGAS to the United States; and

(D) Determine the date and time the vessel arrives at the United States port of entry.

(ii) In the case of Certified Sulfur-FRGAS, have an independent third party:

(A) Collect a representative sample from each vessel compartment subsequent to the vessel's arrival at the United States port of entry and prior to off loading any gasoline from the vessel;

(B) Prepare a volume-weighted vessel composite sample from the compartment samples; and

(C) Determine the sulfur value using the methodologies specified in § 80.330, by:

(*1*) The third party analyzing the sample; or

(*2*) The third party observing the importer analyze the sample.

(4) Any importer shall submit reports within thirty days following the date any vessel transporting Sulfur-FRGAS arrives at the United States port of entry:

(i) To the Administrator containing the information determined under paragraph (o)(3) of this section; and

(ii) To the foreign refiner containing the information determined under paragraph (o)(3)(ii) of this section.

(5)(i) Any United States importer shall meet the requirements specified in § 80.195 for any imported gasoline that is not classified as Certified Sulfur-FRGAS under paragraph (o)(2) of this section.

(p) *Truck imports of Certified Sulfur-FRGAS produced at a small refinery.* (1) Any refiner whose Certified Sulfur-FRGAS is transported into the United States by truck may petition EPA to use alternative procedures to meet the following requirements:

(i) Certification under paragraph (d)(5) of this section;

(ii) Load port and port of entry sampling and testing under paragraphs (f) and (g) of this section;

(iii) Attest under paragraph (h) of this section; and

(iv) Importer testing under paragraph (o)(3) of this section.

(2) These alternative procedures must ensure Certified Sulfur-FRGAS remains segregated from Non-Certified Sulfur-FRGAS and from Non-Sulfur-FRGAS until it is imported into the United States. The petition will be evaluated based on whether it adequately addresses the following:

(i) Provisions for monitoring pipeline shipments, if applicable, from the refinery, that ensure segregation of Certified Sulfur-FRGAS from that refinery from all other gasoline;

(ii) Contracts with any terminals and/or pipelines that receive and/or transport Certified Sulfur-FRGAS, that prohibit the commingling of Certified Sulfur-FRGAS with any of the following:

(A) Other Certified Sulfur-FRGAS from other refineries;

(B) All Non-Certified Sulfur-FRGAS; or

(C) All Non-Sulfur-FRGAS;

(iii) Procedures for obtaining and reviewing truck loading records and United States import documents for Certified Sulfur-FRGAS to ensure that such gasoline is only loaded into trucks making deliveries to the United States; and

(iv) Attest procedures to be conducted annually by an independent third party that review loading records and import documents based on volume reconciliation, or other criteria, to confirm that all Certified Sulfur-FRGAS remains segregated throughout the distribution system and is only loaded into trucks for import into the United States.

(3) The petition required by this section must be submitted to EPA along with the application for small refiner status and individual refinery sulfur baseline and standards under § 80.240 and this section.

(q) *Withdrawal or suspension of a foreign refinery's baseline.* EPA may withdraw or suspend a baseline that has been assigned to a foreign refinery where:

(1) A foreign refiner fails to meet any requirement of this section;

(2) A foreign government fails to allow EPA inspections as provided in paragraph (i)(1) of this section;

(3) A foreign refiner asserts a claim of, or a right to claim, sovereign immunity in an action to enforce the requirements in this subpart H; or

(4) A foreign refiner fails to pay a civil or criminal penalty that is not

satisfied using the foreign refiner bond specified in paragraph (k) of this section.

(r) *Early use of a foreign refinery baseline.* (1) A foreign refiner may begin using an individual refinery baseline before EPA has approved the baseline, provided that:

(i) A baseline petition has been submitted as required in paragraph (b) of this section;

(ii) EPA has made a provisional finding that the baseline petition is complete;

(iii) The foreign refiner has made the commitments required in paragraph (i) of this section;

(iv) The persons who will meet the independent third party and independent attest requirements for the foreign refinery have made the commitments required in paragraphs (f)(4)(iii) and (h)(7)(iii) of this section; and

(2) In any case where a foreign refiner uses an individual refinery baseline before final approval under paragraph (r)(1) of this section, and the foreign refinery baseline values that ultimately are approved by EPA are more stringent than the early baseline values used by the foreign refiner, the foreign refiner shall recalculate its compliance, ab initio, using the baseline values approved by EPA, and the foreign refiner shall be liable for any resulting violation of the conventional gasoline requirements.

(s) *Additional requirements for petitions, reports and certificates.* Any petition for a refinery baseline under § 80.250 or § 80.295, any alternative procedures under paragraph (p) of this section, and any certification under paragraph (d)(3) of this section shall be:

(1) Submitted in accordance with procedures specified by the Administrator, including use of any forms that may be specified by the Administrator; and

(2) Be signed by the president or owner of the foreign refiner company, or by that person's immediate designee, and shall contain the following declaration:

I hereby certify: (1) that I have actual authority to sign on behalf of and to bind [insert name of foreign refiner] with regard to all statements contained herein; (2) that I am aware that the information contained herein is being certified, or submitted to the United States Environmental Protection Agency, under the requirements of 40 CFR. Part 80, subpart H, and that the information is material for determining compliance under these regulations; and (3) that I have read and understand the information being certified or submitted, and this information is true, complete and correct to the best of my knowledge and belief after I have taken reasonable and appropriate steps to verify the accuracy thereof.

I affirm that I have read and understand the provisions of 40 CFR Part 80, subpart H, including 40 CFR 80.410 [insert name of foreign refiner]. Pursuant to Clean Air Act section 113(c) and Title 18, United States Code, section 1001, the penalty for furnishing false, incomplete or misleading information in this certification or submission is a fine of up to $10,000, and/or imprisonment for up to five years.

[65 FR 6823, Feb. 10, 2000, as amended at 66 FR 19309, Apr. 13, 2001; 67 FR 40185, June 12, 2002; 70 FR 74578, Dec. 15, 2005]

ATTEST ENGAGEMENTS

§ 80.415 What are the attest engagement requirements for gasoline sulfur compliance applicable to refiners and importers?

In addition to the requirements for attest engagements that apply to refiners and importers under §§ 80.125 through 80.130, and § 80.410, the attest engagements for importers and refiners must include the following procedures and requirements each year.

(a) *Baseline.* (1) Obtain the EPA sulfur baseline approval letter for the refinery to determine the refinery's applicable sulfur baseline and baseline volume under §§ 80.250 or 80.295.

(2) If the year being reviewed is 2004 through 2006 (2007 for refineries with small refiner status) and the refinery or importer produced or imported any GPA gasoline under § 80.216 or the refiner has approved status for a small refinery:

(i) Obtain the refinery's annual sulfur reports for 2000 through 2003; and

(ii) Determine whether the annual average sulfur level for any year credits were generated for 2000 through 2003 was less than the baseline level under paragraph (a)(1) of this section.

(iii) If the annual average sulfur level for any year in which credits were generated for 2000 through 2003 was less

than the baseline level under paragraph (a)(1) of this section, for small refiners report as a finding the lowest annual sulfur level as the new baseline value for purposes of establishing the small refiner standards under § 80.240, and for GPA gasoline report as a finding the lowest annual sulfur level plus 30.00 ppm as the new sulfur level for purposes of credit generation under § 80.310, if lower than 150.00 ppm.

(iv) If the refinery being reviewed is a small refinery and the annual volume under paragraph (b)(2) of this section is greater than the baseline volume, calculate the applicable standard in accordance with § 80.240(c).

(3) Obtain a written representation from the company representative stating the sulfur value that the company used as its baseline and agree that number to paragraphs (a)(1) and (a)(2) of this section and to the reports to EPA.

(b) *EPA reports.* (1) Obtain and read a copy of the refinery's or importer's annual sulfur reports filed with EPA for the year.

(2) Agree the yearly volume of gasoline reported to EPA in the sulfur reports with the inventory reconciliation analysis under § 80.128.

(3) For the years 2004 through 2006, calculate the annual volume and average sulfur level for gasoline classified as GPA gasoline under §§ 80.216 and 80.219, and calculate the annual volume and average sulfur level for gasoline not classified as GPA gasoline, and agree these values with the values reported to EPA.

(4) Except as provided in paragraph (b)(3) of this section, calculate the annual average sulfur level for all gasoline and agree that value with the value reported to EPA.

(5) Obtain and read a copy of the refinery's or importer's sulfur credit report.

(6) Agree the information in the refinery's or importer's batch reports filed with EPA under §§ 80.75 and 80.105, and any laboratory test results, with the information contained in the annual sulfur report required under § 80.370.

(c) *Credit generation before 2004.* In the case of a refinery that only generates credits during 2000 through 2003:

(1) Obtain a written representation from the company representative stating the refinery produces gasoline from crude oil.

(2) Compute and report as a finding the sulfur baseline from paragraph (a) of this section multiplied by 0.9.

(3) Obtain the annual average sulfur level from paragraph (b)(4) of this section.

(4) If the sulfur value under paragraph (c)(3) of this section is less than the sulfur value under paragraph (c)(2) of this section, compute and report as a finding the difference between the annual average sulfur level and the refinery's sulfur baseline from paragraph (a) of this section.

(5) Compute and report as a finding the total number of sulfur credits generated by multiplying the value in paragraph (c)(4) of this section by the volume of gasoline in paragraph (b)(2) of this section, and agree this value with the value reported to EPA.

(d) *Credit generation in 2004 and thereafter.* The following procedures shall be completed for a refinery or importer that generates credits in 2004 and thereafter:

(1) Obtain the annual average sulfur level for gasoline not classified as GPA from paragraph (b)(3) of this section.

(2) If the sulfur value under paragraph (d)(1) of this section is less than 30 ppm, compute and report as a finding the difference between the sulfur level under paragraph (d)(1) of this section and 30 ppm.

(3) Compute and report as a finding the total number of sulfur credits generated by multiplying the value calculated in paragraph (d)(2) of this section by the volume of gasoline not classified as GPA in paragraph (b)(3) of this section, and agree this number with the number reported to EPA.

(4) Obtain the annual average sulfur level for gasoline classified as GPA from paragraph (b)(3) of this section.

(5) If the sulfur value under paragraph (d)(4) of this section is less than the applicable level under § 80.310, compute and report as a finding the difference between the sulfur level under paragraph (d)(4) of this section and the appropriate level in § 80.310 .

(6) Compute and report as a finding the total number of sulfur credits generated by multiplying the value calculated in paragraph (d)(5) of this section by the volume of gasoline classified as GPA in paragraph (b)(3) of this section, and agree this number with the number reported to EPA.

(7) If the refiner has an approved status as a small refinery, obtain the annual average sulfur level for gasoline from paragraph (b)(4) of this section.

(8) If the sulfur value under paragraph (d)(7) of this section is less than the applicable standard under § 80.240, compute and report as a finding the difference between the sulfur level under paragraph (d)(7) of this section and the appropriate standard under § 80.240.

(9) Compute and report as a finding the total number of sulfur credits generated by multiplying the value calculated in paragraph (d)(8) of this section by the volume of gasoline in paragraph (b)(4) of this section, and agree this number with the number reported to EPA.

(e) *Credit purchases and sales.* The following attest procedures shall be completed for a refinery or importer that is a transferor or transferee of credits during an averaging period:

(1) Obtain contracts or other documents for all credits transferred to another refinery or importer during the year being reviewed; compute and report as a finding the number and year of creation of credits represented in these documents as being transferred away; and agree with the report to EPA.

(2) Obtain contracts or other documents for all credits received during the year being reviewed; compute and report as a finding the number and year of creation of credits represented in these documents as being received; and agree with the report to EPA.

(f) *Credits required for non-GPA gasoline.* The following attest procedures shall be completed for refineries and importers in 2005 and thereafter (2004 and thereafter for refineries having standards under § 80.240):

(1) Obtain the annual average sulfur level for gasoline not classified as GPA from paragraph (b)(3) of this section.

(2) If the value in paragraph (f)(1) of this section is greater than 30 ppm (or greater than the small refinery standard), compute and report as a finding the difference between 30 ppm (or the standard under § 80.240) and the value in paragraph (f)(1) of this section.

(3) Compute and report as a finding the total sulfur credits required by multiplying the value in paragraph (f)(2) of this section times the volume of gasoline not classified as GPA in paragraph (b)(3) of this section, and agree with the report to EPA.

(4) Obtain the refiner's or importer's representation as to the portion of the deficit under paragraph (f)(3) of this section that was resolved with credits, the portion that was resolved with allotments in 2005 only or that was carried forward as a deficit under § 80.205, and agree with the report to EPA (refineries subject to standards under § 80.240 cannot carry deficits forward).

(g) *Credits required for GPA gasoline.* The following attest procedures shall be completed in 2004 through 2006 for a refinery or importer that produces gasoline subject to the geographic phase-in area standards under § 80.216:

(1) Obtain the annual average sulfur level for the refinery's or importer's GPA gasoline from paragraph (b)(3) of this section.

(2) If the value in paragraph (g)(1) of this section is greater than the refinery's or importer's baseline plus 30 ppm under § 80.216, as determined in paragraph (a) of this section or 150 ppm, whichever is less, compute and report as a finding the difference between the annual average sulfur level and the baseline level plus 30 ppm, or 150 ppm, whichever is less.

(3) Compute and report as a finding the total sulfur credits and/or allotments required by multiplying the value in paragraph (g)(2) of this section times the volume of GPA gasoline from paragraph (b)(3) of this section.

(4) Obtain the refiner's or importer's representation as to the portion of the deficit under paragraph (g)(3) of this section that was resolved with credits, or the portion that was resolved with allotments in 2004 or 2005 only (compliance deficits for GPA gasoline cannot be carried forward).

(h) *Credit expiration.* The following attest procedures shall be completed for a refinery or importer that possesses credits during an averaging period:

(1) Obtain a list of all credits in the refiner's or importer's possession at any time during the year being reviewed, identified by the year of creation of the credits.

(2) If the year being reviewed is 2006 and thereafter, except in the case of gasoline produced for use in the GPA and gasoline produced by small refiners, determine whether any credits identified in paragraph (h)(1) of this section or Type A sulfur allotments created under paragraph (i) of this section and converted to credits were created before 2004, and if so, report as a finding this number of expired credits.

(3) If the year being reviewed is 2008 and thereafter, determine whether any credits identified in paragraph (h)(1) of this section or Type B sulfur allotments created under paragraph (i) of this section and converted to credits were created more than 5 years before the year being reviewed, and if so, report as a finding this number of expired credits (for example, unused credits created during the 2004 averaging period expire at the end of the 2009 averaging period).

(i) *Optional credit and allotment generation in 2003.* The following requirements apply to any refinery that generates credits and allotments in 2003 under § 80.275(a):

(1) Obtain a written representation from the company representative stating the refinery produces gasoline from crude oil.

(2) Obtain the refinery baseline value from paragraph (b)(1) of this section, the annual volume from paragraph (b)(2) of this section and the annual average sulfur level from paragraph (b)(4) of this section.

(3) Based on the annual sulfur level and refinery baseline, determine which equation under § 80.275(a)(2) applies.

(4) Using the applicable equations under § 80.275(a)(2), recalculate the sulfur allotments, by type, and credits and report as a finding.

(j) *Credit reconciliation.* The following attest procedures shall be completed each year credits were in the refiner's or importer's possession at any time during the year:

(1) Obtain the credits remaining or the credit deficit from the previous year from the refiner's or importer's report to EPA for the previous year.

(2) Compute and report as a finding the net credits remaining at the conclusion of the year being reviewed by totaling:

(i) Credits remaining from the previous year; plus

(ii) Credits generated under paragraphs (c), (d) and (i) of this section; plus

(iii) Allotments generated under paragraph (i) of this section which are converted to credits; plus

(iv) Credits purchased under paragraph (e) of this section; minus

(v) Credits sold under paragraph (e) of this section; minus

(vi) Credits used under paragraphs (f) and (g) of this section; minus

(vii) Credits expiring under paragraph (h) of this section; minus

(viii) Credit deficit from the previous year.

(3) Agree the credits remaining or the credit deficit at the conclusion of the year being reviewed with the report to EPA.

(4) If the refinery or importer had a credit deficit for both the previous year and the year being reviewed, report this fact as a finding.

(k) *Sulfur allotments in 2004 and 2005.* The following requirements apply to any refinery or importer that is subject to corporate pool average standards under § 80.195:

(1) *Corporate pool average.* (i) Obtain the annual average sulfur level for the refiner or importer from the sulfur report filed with EPA for all gasoline subject to corporate pool standards (all gasoline produced and imported, except that if 50% or greater of the gasoline volume was GPA gasoline the refiner or importer is not subject to the corporate pool average).

(ii) Compute and report as a finding the company's gasoline volume subject to corporate pool standards and average sulfur level for gasoline subject to corporate pool standards, and agree with the values reported to EPA.

(2) *Allotment generation.* (i) For 2004, if the corporate pool average is less than

120 ppm, compute and report as a finding the number and type of sulfur allotments generated in accordance with the applicable provisions under § 80.275(b).

(ii) For 2005, if the corporate pool average is less than 90 ppm, compute and report as a finding the number and type of sulfur allotments generated in accordance with the applicable provisions under § 80.275(b).

(iii) If the refiner or importer produced and imported 50% or more of its gasoline for GPA use in 2004 or 2005, no allotments can be generated in that year.

(3) *Allotment purchases and sales.* (i) Obtain contracts or other documents for all allotments transferred to another company during the year being reviewed; compute and report as a finding the number of allotments represented in these documents as being transferred away; and agree with the report to EPA.

(ii) Obtain contracts or other documents for all allotments received during the year being reviewed; compute and report as a finding the number of allotments represented in these documents as being received; and agree with the report to EPA.

(4) *Allotments required.* (i) For 2004, if the corporate pool average is greater than 120 ppm, compute and report as a finding the number of allotments required by multiplying the amount the corporate pool average is above 120 ppm times the corporate pool volume, and agree with the report to EPA.

(ii) For 2005, if the corporate pool average is greater than 90 ppm, compute and report as a finding the number of allotments required by multiplying the amount the corporate pool average is above 90 ppm times the corporate pool volume, and agree with the report to EPA.

(iii) Obtain the number of allotments used to meet standards for GPA gasoline determined in paragraph (g) of this section.

(5) *Allotment reconciliation.* (i) Compute and report as a finding the net allotments remaining at the conclusion of the year being reviewed by totaling allotments:

(A) Generated under paragraphs (i)(4) and (k)(2) of this section; plus

(B) Purchased under paragraph (k)(3) of this section; minus

(C) Sold under paragraph (k)(3) of this section; minus

(D) Used under paragraph (k)(4) of this section for demonstrating compliance with the corporate pool average.

(ii) Report as a finding any allotments generated in 2003 or 2004 that are used to meet the corporate pool standards in 2005 that were not reduced to 50% of their original value.

(iii) If the company's net allotments remaining are less than zero, report this fact as a finding.

[65 FR 6823, Feb. 10, 2000, as amended at 67 FR 40185, June 12, 2002; 71 FR 54912, Sept. 20, 2006]

Subpart I—Motor Vehicle Diesel Fuel; Nonroad, Locomotive, and Marine Diesel Fuel; and ECA Marine Fuel

SOURCE: 66 FR 5136, Jan. 18, 2001, unless otherwise noted.

GENERAL INFORMATION

§ 80.500 What are the implementation dates for the motor vehicle diesel fuel sulfur control program?

The implementation dates for standards for motor vehicle diesel fuel and diesel fuel additives, and for other provisions of this subpart, are as follows:

(a) *Implementation date for standards applicable to production or importation of motor vehicle diesel fuel, and to motor vehicle diesel fuel additives.* Except as provided in paragraph (d) of this section, beginning June 1, 2006:

(1) The standards and requirements under § 80.520(a) and (b) shall apply to any motor vehicle diesel fuel produced or imported by any refiner or importer; and

(2) The standards and requirements under § 80.521 shall apply to any motor vehicle diesel fuel additive.

(b) *Implementation date for standards applicable to motor vehicle diesel fuel downstream of the refinery or importer.* Except as provided in paragraphs (c) and (d) of this section, beginning September 1, 2006, the standards and requirements under § 80.520(a) shall apply to any motor vehicle diesel fuel at any downstream location.

(c) *Implementation date for standards applicable to motor vehicle diesel fuel at retail outlets and wholesale purchaser-consumer facilities*. Except as provided in paragraph (d) of this section, beginning October 15, 2006, the standards and requirements under § 80.520(a) shall apply to any motor vehicle diesel fuel at any retail outlet or wholesale purchaser-consumer facility.

(d) *Implementation date for motor vehicle diesel fuel subject to the 500 ppm sulfur content standard in § 80.520(c)*. (1) Beginning June 1, 2006, the sulfur content standard of § 80.520(c) shall apply to motor vehicle diesel fuel, but only where authorized under, and subject to, an applicable provision of this Subpart.

(2) Beginning June 1, 2010, the sulfur content standard of § 80.520(c) shall no longer apply to any motor vehicle diesel fuel produced or imported by any refiner or importer.

(3) Beginning October 1, 2010, the sulfur content standard of § 80.520(c) shall no longer apply to any motor vehicle diesel fuel at any downstream location other than a retail or wholesale purchaser-consumer facility.

(4) Beginning December 1, 2010, the sulfur content standard of § 80.520(c) shall no longer apply to any motor vehicle diesel fuel.

(e) *Other provisions*. All other provisions of this subpart apply beginning June 1, 2006, unless another date is specified.

[66 FR 5136, Jan. 18, 2001, as amended at 69 FR 39168, June 29, 2004; 70 FR 70509, Nov. 22, 2005]

§ 80.501 What fuel is subject to the provisions of this subpart?

(a) *Included fuel and additives*. The provisions of this subpart apply to the following fuels and additives except as specified in paragraph (b) of this section:

(1) Motor vehicle diesel fuel.

(2) Nonroad, locomotive, or marine diesel fuel.

(3) Diesel fuel additives.

(4) Heating oil.

(5) ECA marine fuel.

(6) Other distillate fuels.

(7) Motor oil that is used as or intended for use as fuel in diesel motor vehicles or nonroad diesel engines or is blended with diesel fuel for use in diesel motor vehicles or nonroad diesel engines, including locomotive and marine diesel engines, at any downstream location.

(b) *Excluded fuel*. The provisions of this subpart do not apply to distillate fuel that is designated for export outside the United States in accordance with § 80.598, identified for export by a transfer document as required under § 80.590, and that is exported.

[69 FR 39168, June 29, 2004, as amended at 75 FR 22968, Apr. 30, 2010]

§ 80.502 What definitions apply for purposes of this subpart?

The definitions of § 80.2 and the following additional definitions apply to this subpart I:

(a) *Entity* means any refiner, importer, distributor, retailer or wholesale-purchaser consumer of any distillate fuel (or other product subject to the requirements of this subpart I).

(b) *Facility* means any place, or series of places, where an entity produces, imports, or maintains custody of any distillate fuel (or other product subject to the requirements of this subpart I) from the time it is received to the time custody is transferred to another entity, except as described in paragraphs (b)(1) through (4) of this section:

(1) Where an entity maintains custody of a batch of diesel fuel (or other product subject to the requirements of this subpart I) from one place in the distribution system to another place (*e.g.*, from a pipeline to a terminal), all owned by the same entity, both places combined are considered to be one single aggregated facility, except where an entity chooses to treat components of such an aggregated facility as separate facilities. The choice made to treat these places as separate facilities may not be changed by the entity during any applicable compliance period. Except as specified in paragraph (b)(2) of this section, where compliance requirements depend upon facility-type, the entire facility must comply with the requirements that apply to its components as follows:

(i) If an aggregated facility includes a refinery, the entire facility must comply with the requirements applicable to refineries.

(ii) If an aggregated facility includes a truck loading terminal but not a refinery, the entire facility must comply with the requirements applicable to truck loading terminals.

(iii) *Situations where a refinery is aggregated with a truck loading terminal.*

(A) Where a refinery is aggregated with a truck loading terminal, diesel fuel or other product subject to the requirements of this subpart I produced by such refinery and distributed over the truck terminal rack must be included in refinery batches that may be based on shipments to a truck terminal rack tank or on the total volumes delivered to tanker trucks for a period not to exceed 1 calendar month per batch.

(B) Where a refinery is aggregated with a truck loading terminal, diesel fuel or other product subject to the requirements of this subpart I that were imported or produced by another refinery, and that are distributed through the refinery or truck terminal rack, must be treated as previously designated fuel for which the aggregated facility is responsible for all applicable balance and downgrade requirements under §§ 80.527, 80.598, 80.599 and related recordkeeping and reporting requirements like any other distributor downstream from the refiner or importer.

(2) A refinery or import facility may not be aggregated with facilities that receive fuel from other refineries or import facilities, either directly or indirectly. For example, a refinery may not be aggregated with a terminal that receives any fuel from a common carrier pipeline. However, a refinery may be aggregated with a pipeline and terminal that are owned by the same entity and which receive no fuel from any source other than the refinery. Likewise, a refinery may not be aggregated with a mobile facility that is also carrying another entity's fuel; it may however be aggregated with a mobile facility that does not receive fuel from any source other than the refinery. If a refinery or import facility is aggregated with other facilities, then the aggregated facility is treated as a refinery or import facility.

(3) Retail outlets or wholesale purchaser consumers may not be aggregated with any other facility.

(4) Mobile components and mobile facilities. (i) Where an entity maintains custody of diesel fuel in one or more mobile components (*e.g.*, rail, barge, shipping, or trucking operations), the mobile components may be aggregated as a single facility. Mobile components may also be aggregated with a facility from which they receive fuel or a facility to which they deliver fuel. However, mobile components may not be aggregated with both a facility from which they receive fuel and a facility to which they deliver fuel.

(ii) When an entity maintains title to, but not custody of, diesel fuel in one or more mobile components, the entity may treat the mobile component(s) as a facility under this paragraph (b), but only for the fuel to which the entity has title. In the event that title changes while a mobile component is in transport (but the fuel physically remains in the same mobile facility), the original entity that had title to the fuel continues to be responsible for the designate and track requirements until custody of the fuel is transferred from the mobile facility.

(5) An individual refinery or contiguous pipeline may not be subdivided into more than one facility. An individual terminal may not be subdivided into more than one facility unless approved by the Administrator.

(c) *Truck loading terminal* means any facility that dyes NRLM diesel fuel or ECA marine fuel, pays taxes on motor vehicle diesel fuel per IRS code (26 CFR part 48), or adds a fuel marker pursuant to § 80.510 to heating oil and delivers diesel fuel or heating oil into trucks for delivery to retail or ultimate consumer locations.

(d) *Batch* means a quantity of diesel fuel (or other product subject to the requirements of this subpart I) which is homogeneous with regard to those properties that are specified for MVNRLM diesel fuel or ECA marine fuel under this subpart I, has the same designation under this subpart I (if applicable), and whose custody is transferred from one facility to another facility.

(1) In the case of aggregated facilities consisting of a refinery and a truck loading terminal, a batch may be defined by one of the following methods:

(i) The sum of the deliveries from the truck loading terminal rack to trucks for periods not to exceed 1 month;

(ii) Each individual truck or truck compartment; or

(iii) For refineries with ''certification tanks'' where testing is performed and ''rack tanks'' that feed the truck loading terminal rack, each transfer from the certification tank to the rack tank. If this method of determining a batch is selected, it must be the sole method used and must be performed such that no double-counting or undercounting of volumes occurs.

(2) [Reserved]

(e) *Downstream location* means any point in the diesel fuel distribution system that is downstream of refineries and import facilities, for example, diesel fuel at facilities of distributors, carriers, retailers, kerosene blenders, and wholesale purchaser-consumers.

(f) *Definition of PADD*. For the purposes of this subpart only, the following definitions of PADDs apply:

(1) The following States are included in PADD I:

Connecticut
Delaware
District of Columbia
Florida
Georgia
Maine
Maryland
Massachusetts
New Hampshire
New Jersey
New York
North Carolina
Pennsylvania
Rhode Island
South Carolina
Vermont
Virginia
West Virginia

(2) The following States are included in PADD II:

Illinois
Indiana
Iowa
Kansas
Kentucky
Michigan
Minnesota
Missouri
Nebraska
North Dakota
Ohio
Oklahoma
South Dakota
Tennessee
Wisconsin

(3) The following States are included in PADD III:

Alabama
Arkansas
Louisiana
Mississippi
New Mexico
Texas

(4) The following States are included in PADD IV:

Colorado
Idaho
Montana
Utah
Wyoming

(5) The following States are included in PADD V:

Alaska
Arizona
California
Hawaii
Nevada
Oregon
Washington

(6) The following areas are included in PADD VI:

U.S. Virgin Islands
Commonwealth of Puerto Rico

(g) *Emission Control Area*. An Emission Control Area (ECA), for the purposes of this subpart, means the ''ECA'' as defined in 40 CFR 1043.20 as well as ''ECA associated area'' as defined in 40 CFR 1043.20.

(h) *Marine diesel engine*. For the purposes of this subpart I only, marine diesel engine means a diesel engine installed on a Category 1 (C1) or Category 2 (C2) marine vessel.

[69 FR 39168, June 29, 2004, as amended at 70 FR 70509, Nov. 22, 2005; 71 FR 25716, May 1, 2006; 75 FR 22969, Apr. 30, 2010]

§§ 80.503–80.509 [Reserved]

§ 80.510 What are the standards and marker requirements for NRLM diesel fuel and ECA marine fuel?

(a) *Beginning June 1, 2007*. Except as otherwise specifically provided in this subpart, all NRLM diesel fuel is subject to the following per-gallon standards:

(1) Sulfur content. 500 parts per million (ppm) maximum.

(2) Cetane index or aromatic content, as follows:

(i) A minimum cetane index of 40; or

(ii) A maximum aromatic content of 35 volume percent.

(b) *Beginning June 1, 2010.* Except as otherwise specifically provided in this subpart, all NR and LM diesel fuel is subject to the following per-gallon standards:

(1) Sulfur content.

(i) 15 ppm maximum for NR diesel fuel.

(ii) 500 ppm maximum for LM diesel fuel.

(2) Cetane index or aromatic content, as follows:

(i) A minimum cetane index of 40; or

(ii) A maximum aromatic content of 35 volume percent.

(c) *Beginning June 1, 2012.* Except as otherwise specifically provided in this subpart, all NRLM diesel fuel is subject to the following per-gallon standards:

(1) Sulfur content. 15 ppm maximum.

(2) Cetane index or aromatic content, as follows:

(i) A minimum cetane index of 40; or

(ii) A maximum aromatic content of 35 volume percent.

(d) *Marking provisions.* From June 1, 2007 through May 31, 2010:

(1) Except as provided for in paragraph (i) of this section, prior to distribution from a truck loading terminal, all heating oil shall contain six milligrams per liter of marker solvent yellow 124.

(2) All motor vehicle and NRLM diesel fuel shall be free of solvent yellow 124.

(3) Any diesel fuel that contains greater than or equal to 0.10 milligrams per liter of marker solvent yellow 124 shall be deemed to be heating oil and shall be prohibited from use in any motor vehicle or nonroad diesel engine (including locomotive, or marine diesel engines).

(4) Except as provided for in paragraph (i) of this section, any diesel fuel, other than jet fuel or kerosene that is downstream of a truck loading terminal, that contains less than 0.10 milligrams per liter of marker solvent yellow 124 shall be considered motor vehicle diesel fuel or NRLM diesel fuel, as appropriate.

(5) Any heating oil that is required to contain marker solvent yellow 124 pursuant to the requirements of this paragraph (d) must also contain visible evidence of dye solvent red 164.

(e) *Marking provisions.* From June 1, 2010 through May 31, 2012:

(1) Except as provided for in paragraph (i) of this section, prior to distribution from a truck loading terminal, all heating oil and diesel fuel designated as 500 ppm sulfur LM diesel fuel shall contain six milligrams per liter of solvent yellow 124.

(2) All motor vehicle and NR diesel fuel shall be free of marker solvent yellow 124.

(3) Any diesel fuel that contains greater than or equal to 0.10 milligrams per liter of marker solvent yellow 124 shall be deemed to be LM diesel fuel or heating oil, as appropriate, and shall be prohibited from use in any motor vehicle or nonroad diesel engine (except for locomotive or marine diesel engines).

(4) Except as provided for in paragraph (i) of this section, any diesel fuel, other than jet fuel or kerosene that is downstream of a truck loading terminal, that contains less than 0.10 milligrams per liter of marker solvent yellow 124 shall be considered motor vehicle diesel fuel or NR diesel fuel, as appropriate.

(5) Any LM diesel fuel or heating oil that is required to contain marker solvent yellow 124 pursuant to the requirements of this paragraph (e) must also contain visible evidence of dye solvent red 164.

(f) *Marking provisions.* From June 1, 2012 through May 31, 2014:

(1) Except as provided for in paragraph (i) of this section, prior to distribution from a truck loading terminal, all heating oil shall contain six milligrams per liter of marker solvent yellow 124.

(2) All motor vehicle and NRLM diesel fuel shall be free of marker solvent yellow 124.

(3) Any diesel fuel that contains greater than or equal to 0.10 milligrams per liter of marker solvent yellow 124 shall be deemed to be heating oil and shall be prohibited from use in

any motor vehicle or nonroad diesel engine (including locomotive, or marine diesel engines).

(4) Except as provided for in paragraph (i) of this section, any diesel fuel, other than jet fuel or kerosene that is downstream of a truck loading terminal, that contains less than 0.10 milligrams per liter of marker solvent yellow 124 shall be considered motor vehicle diesel fuel or NRLM diesel fuel, as appropriate.

(5) Any heating oil that is required to contain marker solvent yellow 124 pursuant to the requirements of this paragraph (f) must also contain visible evidence of dye solvent red 164.

(6) Marker solvent yellow 124 shall not be used in any MVNRLM or heating oil after May 31, 2014.

(g) Special provisions in this part apply to the following areas:

(1) Northeast/Mid-Atlantic Area, which includes the following States and counties, through May 31, 2014: North Carolina, Virginia, Maryland, Delaware, New Jersey, Connecticut, Rhode Island, Massachusetts, Vermont, New Hampshire, Maine, Washington DC, New York (except for the counties of Chautauqua, Cattaraugus, and Allegany), Pennsylvania (except for the counties of Erie, Warren, McKean, Potter, Cameron, Elk, Jefferson, Clarion, Forest, Venango, Mercer, Crawford, Lawrence, Beaver, Washington, and Greene), and the eight eastern-most counties of West Virginia (Jefferson, Berkeley, Morgan, Hampshire, Mineral, Hardy, Grant, and Pendleton).

(2) Alaska.

(h) Pursuant and subject to the provisions of § 80.536, § 80.554, § 80.560, or § 80.561:

(1) Except as provided in paragraph (j) of this section, from June 1, 2007 through May 31, 2010, NRLM diesel fuel produced or imported in full compliance with the requirements of §§ 80.536, 80.554, 80.560, and 80.561 is exempt from the per-gallon sulfur content standard and cetane or aromatics standard of paragraph (a) of this section.

(2) Except as provided in paragraph (j) of this section, from June 1, 2010 through May 31, 2012 for NR diesel fuel and from June 1, 2012 through May 31, 2014 for NRLM diesel fuel produced or imported in full compliance with the requirements of §§ 80.536, 80.554, 80.560, and 80.561 is exempt from the per-gallon standards of paragraphs (b) and (c) of this section, but is subject to the per-gallon standards of paragraph (a) of this section.

(i) The marking requirements of paragraphs (d)(1), (d)(4), (e)(1), (e)(4), (f)(1), and (f)(4) of this section do not apply to heating oil, or, for paragraphs (e)(1) and (e)(4) of this section, diesel fuel designated as LM diesel fuel that is distributed from a truck loading terminal located within the areas listed in paragraphs (g)(1) and (g)(2) of this section and is for sale or intended for sale within these areas, or that is distributed from any other truck loading terminal and is for sale or intended for sale within the area listed in (g)(2) of this section.

(j) The provisions of paragraphs (h)(1) and (h)(2) of this section do not apply to diesel fuel sold or intended for sale in the areas listed in paragraph (g)(1) of this section that is produced or imported in full compliance with the requirements of §§ 80.536 and 80.554 or to diesel fuel sold or intended for sale in the area listed in paragraph (g)(2) of this section that is produced or imported in full compliance with the requirements of § 80.536.

(k) *Beginning June 1, 2014.* All ECA marine fuel is subject to a maximum per-gallon sulfur content of 1,000 ppm.

[69 FR 39168, June 29, 2004, as amended at 70 FR 40895, July 15, 2005; 75 FR 22969, Apr. 30, 2010]

§ 80.511 What are the per-gallon and marker requirements that apply to NRLM diesel fuel, ECA marine fuel, and heating oil downstream of the refiner or importer?

(a) *Applicable dates for marker requirements.* Beginning June 1, 2006, all NRLM diesel fuel and ECA marine fuel shall contain less than 0.10 milligrams per liter of the marker solvent yellow 124, except for LM diesel fuel subject to the marking requirements of § 80.510(e).

(b) *Applicable dates for per-gallon standards.* (1) Beginning June 1, 2006, all NRLM diesel fuel must comply with the per-gallon sulfur standard for the designation or classification stated on its PTD, pump label, or other documentation. Based on the provisions of

§ 80.510(h) and (j), there is no uniform downstream sulfur standard until the downstream dates identified in paragraphs (b)(3) through (b)(8) of this section.

(2) Except as provided in paragraphs (b)(5) and (b)(8) of this section, beginning December 1, 2010, all NRLM diesel fuel must comply with the cetane index or aromatics standard of § 80.510.

(3) Except as provided in paragraphs (b)(5) through (b)(8) of this section, the per-gallon sulfur standard of § 80.510(a) shall apply to all NRLM diesel fuel beginning August 1, 2010 for all downstream locations other than retail outlets or wholesale purchaser-consumer facilities, shall apply to all NRLM diesel fuel beginning October 1, 2010 for retail outlets and wholesale purchaser-consumer facilities, and shall apply to all NRLM diesel fuel beginning December 1, 2010 for all locations.

(4) Except as provided in paragraphs (b)(5) through (8) of this section, the per-gallon sulfur standard of § 80.510(c) shall apply to all NRLM diesel fuel beginning August 1, 2014, for all downstream locations other than retail outlets or wholesale purchaser-consumer facilities, shall apply to all NRLM diesel fuel beginning October 1, 2014 for retail outlets and wholesale purchaser-consumer facilities, and shall apply to all NRLM diesel fuel beginning December 1, 2014, for all locations.

(5) For all NRLM diesel fuel that is sold or intended for sale in the areas listed in § 80.510(g)(1), the per-gallon sulfur standard and the cetane index or aromatics standard of 80.510(a) shall apply to all NRLM diesel fuel beginning August 1, 2007 for all downstream locations other than retail outlets or wholesale purchaser-consumer facilities, shall apply to all NRLM diesel fuel beginning October 1, 2007 for retail outlets and wholesale purchaser-consumer facilities, and shall apply to all NRLM diesel fuel beginning December 1, 2007 for all locations.

(6) For all NR diesel fuel that is sold or intended for sale in the areas listed in § 80.510(g)(1), the per-gallon sulfur standard of § 80.510(b) shall apply to all NR diesel fuel beginning August 1, 2010 for all downstream locations other than retail outlets or wholesale purchaser-consumer facilities, shall apply to all NR diesel fuel beginning October 1, 2010 for retail outlets and wholesale purchaser-consumer facilities, and shall apply to all NR diesel fuel beginning December 1, 2010 for all locations.

(7) For all NRLM diesel fuel that is sold or intended for sale in the areas listed in § 80.510(g)(1), the per-gallon sulfur standard of § 80.510(c) shall apply to all NRLM diesel fuel beginning August 1, 2012 for all downstream locations other than retail outlets or wholesale purchaser-consumer facilities, shall apply to all NRLM diesel fuel beginning October 1, 2012 for retail outlets and wholesale purchaser-consumer facilities, and shall apply to all NRLM diesel fuel beginning December 1, 2012 for all locations.

(8) The provisions of paragraphs (b)(5) through (b)(7) of this section shall apply for all NRLM or NR diesel fuel that is sold or intended for sale in the area listed in § 80.510(g)(2), except for NRLM or NR diesel fuel that is produced in accordance with a compliance plan approved under § 80.554.

(9) The per-gallon sulfur standard of § 80.510(k) shall apply to all ECA marine fuel beginning August 1, 2014, for all downstream locations other than retail outlets or wholesale purchaser-consumer facilities, shall apply to all ECA marine fuel beginning October 1, 2014, for retail outlets and wholesale purchaser-consumer facilities, and shall apply to all ECA marine fuel beginning December 1, 2014, for all locations.

(10) For the purposes of this section, distributors that have their own fuel storage tanks and deliver only to ultimate consumers shall be treated the same as retailers and their facilities treated the same as retail outlets.

[69 FR 39169, June 29, 2004, as amended at 75 FR 22969, Apr. 30, 2010]

§ 80.512 May an importer treat diesel fuel as blendstock?

An importer may exclude diesel fuel that it imports from the requirements under this subpart, and instead may designate such diesel fuel as diesel fuel treated as blendstock (DTAB), if all the following conditions are met:

(a) The DTAB must be included in all applicable designation, credit and compliance calculations for diesel fuel for a

refinery operated by the same entity that is the importer . That entity must meet all refiner standards and requirements.

(b) The importer entity may not transfer title of the DTAB to another entity until the DTAB has been used to produce diesel fuel and all refiner standards and requirements have been met for the diesel fuel produced.

(c) The refinery at which the DTAB is used to produce diesel fuel must be physically located at either the same terminal at which the DTAB first arrives in the U.S., the import facility, or at a facility to which the DTAB is directly transported from the import facility.

(d) The DTAB must be completely segregated from any other diesel fuel, including any diesel fuel tank bottoms, prior to the point of blending, sampling and testing in the importer entity's refinery operation. The DTAB may, however, be added to a diesel fuel blending tank where the diesel fuel tank bottom is not included as part of the batch volume for a prior batch. In addition, the DTAB may be placed into a storage tank that contains other DTAB imported by that importer. The DTAB also may be discharged into a tank containing finished diesel fuel of the same category as the diesel fuel which will be produced using the DTAB (for example, 15 ppm sulfur undyed or 15 ppm sulfur dyed diesel fuel) provided the blending process is performed in that same tank.

(e) The entity must account for the volume of diesel fuel produced using DTAB in a manner that excludes the volume of any previously designated diesel fuel. The diesel fuel tank bottom may not be included in the company's refinery compliance calculations for that batch of diesel fuel if the fuel in that tank bottom has been previously designated by a refiner or importer. This exclusion of previously designated diesel fuel must be accomplished using the following approach:

(1) Determine the volume of any tank bottom that is previously designated diesel fuel before any diesel fuel production begins.

(2) Add the DTAB plus any blendstock to the storage tank, and completely mix the tank.

(3) Determine the volume and sulfur content of the diesel fuel contained in the storage tank after blending is complete. Mathematically subtract the volume of the tank bottom to determine the volume of the DTAB plus blendstock added, and subsequently transferred to another facility. Such fuel is reported to EPA as a batch of diesel fuel under §§ 80.593, 80.601, and 80.604.

(4) If previously designated motor vehicle diesel fuel having a sulfur content of 15 ppm or less is blended with DTAB, and the combined product after blending has a sulfur content that exceeds 15 ppm, the importer entity, in its capacity as a refiner, must redesignate all the diesel fuel as 500 ppm sulfur motor vehicle diesel fuel for purposes of the temporary compliance option under § 80.530, or other permissible redesignation under § 80.598. If #2D 15 ppm sulfur motor vehicle diesel fuel is redesignated as #2D 500 ppm sulfur motor vehicle diesel fuel, such entity must apply the volume of previously designated 15 ppm sulfur diesel fuel, for purposes of its operations as a distributor, to its downgrading limitation under § 80.527, if applicable, and for volume balancing purposes under § 80.599.

(5) As an alternative to paragraphs (e)(1) through (e)(4) of this section, where an importer has a blending tank that is used only to combine DTAB and blending components, and no previously designated diesel fuel is added to the tank, the importer entity, in its capacity as a refiner, may account for the diesel fuel produced in such a blending tank by sampling and testing for the sulfur content of the batch after DTAB and blendstock are added and mixed, and reporting the volume of diesel fuel transferred from that tank to a different facility, up to the point where a new blend is produced by adding new DTAB and blendstock.

(f) The importer must include the volume and sulfur content of each batch of DTAB in the annual importer reports to EPA, as prescribed under §§ 80.593, 80.601, and 80.604, but with a notation that the batch is not included in the importer compliance calculations because the product is DTAB. Any DTAB that ultimately is not used in the importer's refinery operation

(for example, a tank bottom of DTAB at the conclusion of the refinery operation), must be treated as newly imported diesel fuel, for which all required sampling and testing, and recordkeeping must be accomplished, and included in the importer's compliance calculations for the averaging period when this sampling and testing occurs.

(g) The importer must retain records that reflect the importation, sampling and testing, and physical movement of any DTAB, and must make these records available to EPA on request.

[69 FR 39170, June 29, 2004]

§ 80.513 What provisions apply to transmix processing facilities?

For purposes of this section, transmix means a mixture of finished fuels that no longer meets the specifications for a fuel that can be used or sold without further processing. This section applies to refineries that produce diesel fuel from transmix by distillation or other refining processes but do not produce diesel fuel by processing crude oil. This section only applies to the volume of diesel fuel produced by such a transmix processor using these processes, and does not apply to any diesel fuel produced by the blending of blendstocks.

(a) From June 1, 2006 through May 31, 2010, motor vehicle diesel fuel produced by a transmix processor is subject to the 500 ppm sulfur standard under § 80.520(c).

(b) Beginning June 1, 2010, motor vehicle diesel fuel produced by a transmix processor is subject to the sulfur standard under § 80.520(a)(1).

(c) From June 1, 2007 through May 31, 2010, NRLM diesel fuel produced by a transmix processor is exempt from the standards of § 80.510(a). This paragraph (c) does not apply to NRLM diesel fuel that is sold or intended for sale in the areas listed in § 80.510(g)(1) or (g)(2).

(d) From June 1, 2010 through May 31, 2014, NRLM diesel fuel produced by a transmix processor is subject to the standards under § 80.510(a). This paragraph (d) does not apply to NRLM diesel fuel that is sold or intended for sale in the areas listed in § 80.510(g)(1) or (g)(2).

(e) From June 1, 2014 and beyond, NRLM diesel fuel produced by a transmix processor is subject to the standards of § 80.510(c).

[69 FR 39171, June 29, 2004, as amended at 75 FR 22969, Apr. 30, 2010]

§§ 80.514–80.519 [Reserved]

MOTOR VEHICLE DIESEL FUEL STANDARDS AND REQUIREMENTS

§ 80.520 What are the standards and dye requirements for motor vehicle diesel fuel?

(a) *Standards.* All motor vehicle diesel fuel is subject to the following per-gallon standards:

(1) *Sulfur content.* 15 parts per million (ppm) maximum, except as provided in paragraph (c) of this section;

(2) *Cetane index and aromatic content.* (i) A minimum cetane index of 40; or

(ii) A maximum aromatic content of 35 volume percent.

(b) *Dye requirements.* (1) All motor vehicle diesel fuel shall be free of visible evidence of dye solvent red 164 (which has a characteristic red color in diesel fuel), except for motor vehicle diesel fuel that is used in a manner that is tax exempt under section 4082 of the Internal Revenue Code. All motor vehicle diesel fuel shall be free of yellow solvent 124.

(2) Until June 1, 2010, any #1D or #2D distillate, or NP diesel fuel that does not show visible evidence of dye solvent red 164 shall be considered to be motor vehicle diesel fuel and subject to all the requirements of this subpart for motor vehicle diesel fuel, except for distillate fuel designated or classified as any of the following:

(i) For use only in the State of Alaska, as provided under 40 CFR 69.51.

(ii) For use under a national security exemption under § 80.606 or for use only in a research and development testing program exempted under § 80.607.

(iii) For use in the U.S. Territories as provided under § 80.608.

(iv) Jet fuel meeting the definition under § 80.2.

(v) Kerosene meeting the definition under § 80.2.

(vi) Diesel fuel that is produced beginning June 1, 2006, with a sulfur level less than or equal to 500 ppm, and designated as NRLM or LM that has not

yet been distributed from a truck loading terminal or bulk terminal to a retail outlet, wholesale purchaser-consumer or ultimate consumer.

(c) Pursuant and subject to the provisions of §§ 80.530–80.532, 80.552(a), 80.560–80.561, and 80.620, only motor vehicle diesel fuel produced or imported in full compliance with the requirements of those provisions is subject to the following per-gallon standard for sulfur content: 500 ppm maximum.

[66 FR 5136, Jan. 18, 2001, as amended at 69 FR 39171, June 29, 2004; 71 FR 25717, May 1, 2006]

§ 80.521 What are the standards and identification requirements for diesel fuel additives?

(a) Except as provided in paragraph (b) of this section, any diesel fuel additive that is added to, intended for adding to, used in, or offered for use in any MVNRLM diesel fuel subject to the 15 ppm sulfur content standards of § 80.510(b), § 80.510(c), or § 80.520(a) at any downstream location must—

(1) Have a sulfur content less than or equal to 15 ppm.

(2) Be accompanied by a product transfer document pursuant to § 80.591 indicating that the additive complies with the 15 ppm sulfur standard for diesel fuel, except for those diesel fuel additives which are only sold in containers for use by the ultimate consumer of diesel fuel and which are subject to the requirements of § 80.591(d).

(b) Any diesel fuel additive that is added to, intended for adding to, used in, or offered for use in diesel fuel subject to the 15 ppm sulfur content standards of § 80.510(b) or (c) or § 80.520(a) may have a sulfur content exceeding 15 ppm provided that each of the following conditions are met:

(1) The additive is added to or used in the diesel fuel in a quantity less than one percent by volume of the resultant additive/diesel fuel mixture;

(2) The product transfer document complies with the informational requirements of § 80.591; and

(3) The additive is not used or intended for use by an ultimate consumer in diesel motor vehicles or nonroad diesel engines.

[69 FR 39171, June 29, 2004]

§ 80.522 May used motor oil be dispensed into diesel motor vehicles or nonroad diesel engines?

No person may introduce used motor oil, or used motor oil blended with diesel fuel, into the fuel system of model year 2007 or later diesel motor vehicles or model year 2011 or later nonroad diesel engines (not including locomotive or marine diesel engines), unless both of the following requirements have been met:

(a) The vehicle or engine manufacturer has received a Certificate of Conformity under 40 CFR part 86, 40 CFR part 89, or 40 CFR part 1039 and the certification of the vehicle or engine configuration is explicitly based on emissions data with the addition of motor oil; and

(b) The oil is added in a manner and rate consistent with the conditions of the Certificate of Conformity.

[69 FR 39171, June 29, 2004]

§ 80.523 [Reserved]

§ 80.524 What sulfur content standard applies to motor vehicle diesel fuel downstream of the refinery or importer?

(a) Except as provided in paragraph (b) of this section or otherwise in the provisions of this Subpart I, the 15 ppm sulfur content standard of § 80.520(a) shall apply to all motor vehicle diesel fuel at any downstream location.

(b) Prior to the October 1, 2010 and December 1, 2010 dates specified in § 80.500(d)(3) and (4), the 500 ppm sulfur content standard of § 80.520(c) shall apply to motor vehicle diesel fuel at any downstream location, provided the following conditions are met:

(1) The product transfer documents comply with the requirements of § 80.590, including indicating that the fuel complies with the 500 ppm sulfur standard for motor vehicle diesel fuel and is for use only in model year 2006 and older diesel motor vehicles, or the fuel is downgraded pursuant to the provision of § 80.527 to motor vehicle diesel fuel subject to the 500 ppm sulfur standard;

(2) The motor vehicle diesel fuel is not represented or intended for sale or use as subject to the 15 ppm sulfur content standard, and is not dispensed, or

intended to be dispensed, into model year 2007 and later motor vehicles by a retailer or wholesale purchaser-consumer; and

(3) For retailers or wholesale purchaser-consumers, the pump labeling requirements of § 80.570(a) are satisfied.

§ 80.525 What requirements apply to kerosene blenders?

(a) For purposes of this subpart, a kerosene blender means any refiner who produces NRLM or motor vehicle diesel fuel by adding kerosene to NRLM or motor vehicle diesel fuel downstream of the refinery that produced that fuel or of the import facility where the fuel was imported, without altering the quality or quantity of the fuel in any other manner.

(b) Kerosene blenders are not subject to the requirements of this subpart applicable to refiners of diesel fuel, but are subject to the requirements and prohibitions applicable to downstream parties.

(c) For purposes of compliance with §§ 80.524(b)(1) and 80.511(b)(1), the product transfer documents must indicate that the fuel to which kerosene is added complies with the 500 ppm sulfur standard for motor vehicle diesel fuel and is for use only in model year 2006 and older diesel motor vehicles, the fuel is properly downgraded pursuant to the provisions of § 80.527 to motor vehicle diesel fuel subject to the 500 ppm sulfur standard, or the applicable NRLM standard.

(d) Kerosene that a kerosene blender adds or intends to add to diesel fuel subject to the 15 ppm sulfur content standard must meet the 15 ppm sulfur content standard, and either of the following requirements:

(1) The product transfer document received by the kerosene blender indicates that the kerosene is diesel fuel that complies with the 15 ppm sulfur content standard.

(2) The kerosene blender has test results indicating the kerosene complies with the 15 ppm sulfur standard.

[66 FR 5136, Jan. 18, 2001, as amended at 70 FR 40895, July 15, 2005; 75 FR 22969, Apr. 30, 2010]

§ 80.526 [Reserved]

§ 80.527 Under what conditions may motor vehicle diesel fuel subject to the 15 ppm sulfur standard be downgraded to motor vehicle diesel fuel subject to the 500 ppm sulfur standard?

(a) *Definitions*. As used in this section, downgrade means changing the designation or classification of motor vehicle diesel fuel subject to the 15 ppm sulfur standard under § 80.520(a)(1) to motor vehicle diesel fuel subject to the 500 ppm sulfur standard under § 80.520(c). A downgrade occurs when the change in designation or classification takes place. Changing the designation or classification of motor vehicle diesel fuel subject to the 15 ppm sulfur standard under § 80.520(a)(1) to any designation or classification that is not a motor vehicle diesel fuel is not a downgrade for purposes of this section.

(b) *Who is subject to the downgrade limitation:* Any distributor, retailer, or wholesale purchaser consumer that takes custody of any diesel fuel designated or classified as #2D 15 ppm sulfur motor vehicle diesel fuel and delivers any diesel fuel designated or classified as #2D 500 ppm motor vehicle diesel fuel.

(c) *Downgrading limitation*. The provisions of this section apply beginning October 15, 2006.

(1) Except as provided in paragraphs (d) and (e) of this section, a person described in paragraph (b) of this section may not downgrade a total of more than 20 percent of the #2D motor vehicle diesel fuel (by volume) that is subject to the 15 ppm sulfur standard of § 80.520(a)(1) to #2D motor vehicle diesel fuel subject to the sulfur standard of § 80.520(c) while such person has custody of such fuel.

(2) The limitation of paragraph (c)(1) of this section applies separately to each facility as defined under § 80.502 where there is custody of the fuel when it is downgraded.

(3) Compliance with the limitation of paragraph (c)(1) of this section applies separately for the compliance periods of October 15, 2006 through May 31, 2007; June 1, 2007 through June 30, 2008; July 1, 2008 through June 30, 2009; July 1, 2009 through May 31, 2010.

(4) Except as provided in paragraph (e) of this section, compliance with the limitation of paragraph (c)(1) of this section shall be as calculated under § 80.599(e).

(d) *Diesel fuel in violation of the 15 ppm standard.* Where motor vehicle diesel fuel subject to the 15 ppm sulfur standard of § 80.520(a)(1) is found to be in violation of any standard under § 80.520(a) and is consequently downgraded to 500 ppm sulfur motor vehicle diesel fuel, the person having custody of the fuel at the time it is found to be in violation must include the volume of such downgraded fuel toward its 20 percent volume limitation under paragraph (c)(1) of this section, unless the person demonstrates that it did not cause the violation.

(e) *Special provisions for retail outlets and wholesale purchaser-consumer facilities.* Notwithstanding the provisions of paragraph (c)(1) of this section, retailers and wholesale purchaser-consumers shall comply with the downgrading limitation as follows:

(1) Retailers and wholesale purchaser-consumers who sell, offer for sale, or dispense motor vehicle diesel fuel that is subject to the 15 ppm sulfur standard under § 80.520(a)(1) are exempt from the volume limitations of paragraph (c)(1) of this section.

(2) A retailer or wholesale purchaser-consumer who does not sell, offer for sale, or dispense motor vehicle diesel fuel subject to the 15 ppm sulfur standard under § 80.520(a)(1) must comply with the downgrading limitations of paragraph (c) of this section, such that it may not downgrade a volume of motor vehicle diesel fuel, designated as subject to the 15 ppm sulfur standard, for more than 20% of the total volume of motor vehicle diesel fuel that it sells, offers for sale, or dispenses in any compliance period.

(f) *Termination of downgrading limitations.* The provisions of this section shall not apply after May 31, 2010.

[69 FR 39172, June 29, 2004, as amended at 71 FR 25717, May 1, 2006]

§§ 80.528–80.529 [Reserved]

TEMPORARY COMPLIANCE OPTION

§ 80.530 Under what conditions can 500 ppm motor vehicle diesel fuel be produced or imported after May 31, 2006?

(a) Beginning June 1, 2006, a refiner or importer may produce or import motor vehicle diesel fuel subject to the 500 ppm sulfur content standard of § 80.520(c) if all of the following requirements are met:

(1) Each batch of motor vehicle diesel fuel subject to the 500 ppm sulfur content standard must be designated by the refiner or importer as subject to such standard, pursuant to § 80.598(a).

(2) The refiner or importer must meet the requirements for product transfer documents in § 80.590 for each batch subject to the 500 ppm sulfur content standard.

(3)(i) The volume of motor vehicle diesel fuel that is produced or imported during a compliance period (V_{500}, as provided in paragraph (a)(5) of this section, may not exceed the following volume limit:

(A) For the compliance periods prior to the period from July 1, 2009 through May 31, 2010, 20 percent of the volume of motor vehicle diesel fuel that is produced or imported during a compliance period (V_t) plus an additional volume of motor vehicle diesel fuel represented by credits properly generated and used pursuant to the requirements of §§ 80.531 and 80.532.

(B) For the compliance period from July 1, 2009 through May 31, 2010, 20 percent of the volume of motor vehicle diesel fuel that is produced or imported prior to January 1, 2010 during the compliance period (V_t), plus an additional volume of motor vehicle diesel fuel represented by credits properly generated and used pursuant to the requirements of §§ 80.531 and 80.532. From January 1, 2010 through May 31, 2010, the volume of motor vehicle diesel fuel that is produced or imported shall not exceed the volume represented by credits used pursuant to § 80.532.

(ii) The terms V_{500} and V_t have the meaning specified in § 80.531(a)(2).

(4) Compliance with the volume limit in paragraph (a)(3) of this section must

be determined separately for each refinery. For an importer, such compliance must be determined separately for each Credit Trading Area (as defined in § 80.531) into which motor vehicle diesel fuel is imported. If a party is both a refiner and an importer, such compliance shall be determined separately for the refining and importation activities.

(5) Compliance with the volume limit in paragraph (a)(3) of this section shall be determined on an annual basis, where the annual compliance period is from July 1 through June 30. For the year 2006, compliance shall be determined for the period June 1, 2006 through June 30, 2007. For the year 2010, compliance shall be determined for the period of July 1, 2009 through May 31, 2010.

(6) Any motor vehicle diesel fuel produced or imported above the volume limit in paragraph (a)(3) of this section shall be subject to the 15 ppm sulfur content standard. However, for any compliance period prior to the compliance period July 1, 2009 through May 31, 2010, a refiner or importer may exceed the volume limit in paragraph (a)(3) of this section by no more than 5 percent of the volume of diesel fuel produced or imported during the compliance period (V_t), provided that for the immediately following compliance period:

(i) The refiner or importer complies with the volume limit in paragraph (a)(3) of this section; and

(ii) The refiner or importer produces or imports a volume of motor vehicle diesel fuel subject to the 15 ppm sulfur standard, or obtains credits properly generated and used pursuant to the requirements of §§ 80.531 and 80.532 that represent a volume of motor vehicle diesel fuel, equal to the volume of the exceedance for the prior compliance period.

(b) After May 31, 2010, no refiner or importer may produce or import motor vehicle diesel fuel subject to the 500 ppm sulfur content standard pursuant to this section.

[69 FR 39172, June 29, 2004]

§ 80.531 How are motor vehicle diesel fuel credits generated?

(a) *Generation of credits from June 1, 2006 through December 31, 2009.* (1) A refiner or importer may generate credits during the period June 1, 2006 through December 31, 2009, for motor vehicle diesel fuel produced or imported that is designated as subject to the 15 ppm sulfur content standard under § 80.520(a)(1). Credits may be generated only if the volume of motor vehicle diesel fuel designated under § 80.598(a) as subject to the 15 ppm sulfur standard of § 80.520(a) exceeds 80 percent of the total volume of motor vehicle diesel fuel produced or imported as described in paragraph (a)(2) of this section.

(2) The number of motor vehicle diesel fuel credits generated shall be calculated for each compliance period (as specified in § 80.530(a)(5)) as follows:

$$C = V15_{15} - (0.80 \times V_t)$$

Where:

C = the positive number of motor vehicle diesel fuel credits generated, in gallons.

V_{15} = the total volume in gallons of diesel fuel produced or imported that is designated under § 80.598 as motor vehicle diesel fuel and subject to the standards of § 80.520(a) during the compliance period.

$V_t n = V_{15} + V_{500}$

V_{500} = the total volume in gallons of diesel fuel produced or imported that is designated under § 80.598(a) as motor vehicle diesel fuel and subject to the 500 ppm sulfur standard under § 80.520(c) plus the total volume of any other diesel fuel (not including V_{15}, diesel fuel that is dyed in accordance with § 80.520(b) at the refinery or import facility where the diesel fuel is produced or imported, or diesel fuel that is designated as NRLM under § 80.598(a)) represented as having a sulfur content less than or equal to 500 ppm.

(3) Credits shall be generated and designated as follows:

(i) Credits shall be generated separately for each refinery of a refiner.

(ii) Credits shall be generated separately for each credit trading area (CTA), as defined in paragraph (a)(5) of this section, into which motor vehicle diesel fuel is imported by an importer.

(iii) Credits shall be designated separately by year of generation and by CTA of generation. In the case of a refiner, credits shall also be designated by refinery, and in the case of an importer, credits shall also be designated by port of import.

(iv) Credits may not be generated by both a foreign refiner and by an importer for the same motor vehicle diesel fuel.

(4) Credits shall be generated by a foreign refiner as provided in § 80.620(c) and this section.

(5) For purposes of this subpart, the CTAs are:

(i) PADDs I, II, III and IV, as described in § 80.502(f) except as provided in paragraph (a)(5)(iv) of this section. The CTAs shall be designated as CTA 1, 2, 3, and 4, respectively, and correspond to PADDs I, II, III, and IV, respectively;

(ii) CTA 5 shall correspond to PADD V, as described in § 80.502(f), except as provided in paragraphs (a)(5)(iii) and (iv) of this section;

(iii) The states of Hawaii and Alaska shall each be treated as a separate CTA and not a part of CTA 5. Alaska shall be CTA 6. Hawaii shall be CTA 7;

(iv) If any state (through a waiver of federal preemption under Section 211(c)(4) of the Clean Air Act, 42 U.S.C. 7545(c)(4)) implements a law or regulation that requires a greater volume of motor vehicle diesel fuel to meet a sulfur standard of less than or equal to 15 ppm than the volume that is required under this subpart, no motor vehicle diesel fuel produced in that state or imported directly into that state may generate credits under this subpart, effective on the implementation date of the sulfur program under the state statute or regulation that implements the more stringent state requirements.

(v) The U.S. territories specified in § 80.502(f)(6) shall be included in CTA 1.

(6) No credits may be generated under this paragraph (a) after December 31, 2009.

(7) No refinery may generate credits under both this paragraph (a) and under paragraph (e) of this section.

(b) *Generation of early credits from June 1, 2001 through May 31, 2005.* (1) Beginning June 1, 2001, a refiner or importer may generate one credit for each gallon of motor vehicle diesel fuel meeting the sulfur content standard in § 80.520(a)(1) that is used in vehicles with engines that are certified to meet the model year 2007 heavy duty engine PM standard under 40 CFR 86.007–11, or vehicles with retrofit technologies that achieve emission levels equivalent to the 2007 NO_X or PM emission standard verified as part of a retrofit program administered by EPA or a state. Such refiners and importers must comply with the requirements of paragraphs (b) and (d) of this section.

(2)(i) Any refiner or importer planning to generate credits under this paragraph must provide notice of intent to generate early credits at least 120 calendar days prior to the date it begins generating credits under this paragraph by submitting such notice to Attn: Early Diesel Credits Notice, at the address in § 80.595.

(ii) The notice shall include a detailed plan that demonstrates that the motor vehicle diesel fuel meeting the 15 ppm sulfur standard of § 80.520(a)(1) for which credits are generated under this paragraph will be used in vehicles with engines that are certified to meet the model year 2007 heavy duty engine PM standard under 40 CFR 86.007–11 or in vehicles with retrofit technologies that achieve emission levels equivalent to the 2007 NO_X or PM emission standard verified as part of a retrofit program administered by EPA or a state. The notice must include the refiner's or importer's detailed plan for ensuring that all motor vehicle diesel fuel that generates early credits under this paragraph will be segregated from all other motor vehicle diesel fuel not meeting the sulfur standard under § 80.520(a)(1), from the refinery or import facility to its ultimate use in motor vehicles.

(3) No credits may be generated under this paragraph (b) after May 31, 2005.

(4) A refiner or importer may generate credits under this paragraph and also generate credits under paragraph (a) of this section, and a small refiner, as defined under § 80.550, may generate credits under this paragraph (b) and paragraph (e) of this section.

(c) *Generation of early credits from June 1, 2005 through May 31, 2006.* (1) Beginning June 1, 2005, a refiner or importer may generate one credit for each gallon of motor vehicle diesel fuel produced or imported that meets the 15 ppm sulfur standard in § 80.520(a)(1) that is delivered into the distribution system. Such refiners and importers must comply with the requirements of

this paragraph (c) and paragraph (d) of this section.

(2)(i) Any refiner or importer planning to generate credits under this paragraph must provide notice of intent to generate early credits at least 30 calendar days prior to the date it begins generating credits under this paragraph (c).

(ii) [Reserved]

(3) No credits may be generated under this paragraph after May 31, 2006.

(4) A refiner or importer may generate credits under this paragraph (c) and also generate credits under paragraph (a) of this section, and a small refiner, as defined under § 80.550, may generate credits under this paragraph (c) and paragraph (e) of this section.

(5) *Credit transfers for early credits.* For early credits generated under § 80.531(c), credits may be used in any of the CTAs 1 through 5 that were generated in any of the CTAs 1 through 7 to achieve compliance with the volume limit in § 80.503(a)(3);

(d) *Additional requirements for early credits.* Early credits generated under paragraphs (b) and (c) of this section are subject to the following additional requirements:

(1) The designation requirements of § 80.598, and all recordkeeping and reporting requirements of §§ 80.592 (except for paragraph (a)(3)), 80.593, 80.594, 80.600, and 80.601.

(2) Credits generated under paragraphs (b) and (c) of this section shall be generated separately by CTA as defined in paragraph (a)(5) of this section and must be designated by CTA of generation, and by the refiner and refinery, or by importer and port of import, as applicable, except as provided under paragraph (c)(5) of this section.

(3) Credits may not be generated for the same fuel by both a foreign refiner and an importer.

(4) [Reserved]

(5) In addition to the reporting requirements under paragraph (d)(1) of this section, the refiner or importer must submit a report to the Administrator no later than August 31, 2005 for the period from June 1, 2004 through May 31, 2005, or August 31, 2006 for the period from June 1, 2005 through May 31, 2006, demonstrating that all the motor vehicle diesel fuel produced or imported for which credits were generated met the applicable requirements of paragraph (b), (c), or (d)(4) of this section. If the Administrator finds that such credits did not in fact meet the requirements of paragraphs (b)(1) and (c)(1) of this section, as applicable, or if the Administrator determines that there is insufficient information to determine the validity of such credits, the Administrator may deny the credits submitted in whole or in part.

(e) *Credits generated by small refiners.* (1) Notwithstanding the provisions of paragraph (a) of this section, a small refiner that is approved by the EPA as a small refiner under § 80.551(g) may generate credits under § 80.552(b). Such a small refiner may generate one credit for each gallon of motor vehicle diesel fuel produced that is designated under § 80.598 as motor vehicle diesel fuel subject to the 15 ppm sulfur standard under § 80.520(a)(1).

(2)(i) Credits may be generated under this paragraph (e) and § 80.552(b) only during the compliance periods beginning June 1, 2006 and ending on May 31, 2010, however diesel fuel produced after December 31, 2009 shall not generate credits. Credits shall be designated separately by refinery, separately by CTA of generation, and separately by annual compliance period. The annual compliance period for 2006 shall be June 1, 2006 through June 30, 2007. The annual compliance period for 2010 shall be July 1, 2009 through May 31, 2010.

(ii) The small refiner must meet the requirements of paragraphs (d)(1), (d)(2) and (d)(3) of this section, and the recordkeeping and reporting requirements of §§ 80.592, 80.593 and 80.594.

(iii) In addition, a foreign refiner that is approved by the Administrator to generate credits under § 80.552(b) shall comply with the requirements of § 80.620.

[66 FR 5136, Jan. 18, 2001, as amended at 69 FR 39173, June 29, 2004; 70 FR 40895, July 15, 2005; 70 FR 70510, Nov. 22, 2005; 71 FR 25717, May 1, 2006]

§ 80.532 How are motor vehicle diesel fuel credits used and transferred?

(a) *Credit use stipulations.* Motor vehicle diesel fuel credits generated under § 80.531 may be used to meet the volume limit of § 80.530(a)(3) provided that:

(1) The motor vehicle diesel fuel credits were generated and reported according to the requirements of this subpart; and

(2) The conditions of this section are met.

(b) *Use of credits generated under § 80.531.* Motor vehicle diesel fuel credits generated under § 80.531 may be used by a refiner or by an importer to comply with § 80.530 by applying one credit for every gallon of motor vehicle diesel fuel needed to meet compliance with the volume limit of § 80.530(a)(3).

(c) *Credit banking.* Motor vehicle diesel fuel credits generated may be banked for use or transfer in a later compliance period or may be transferred to another refiner or importer for use as provided in paragraph (d) of this section.

(d) *Credit transfers.* (1) Motor vehicle diesel fuel credits obtained from another refiner or from another importer, including early motor vehicle diesel fuel credits and small refiner motor vehicle diesel fuel credits as described in § 80.531(b) through (e), may be used to satisfy the volume limit of § 80.530(a)(3) if all the following conditions are met:

(i) The motor vehicle diesel fuel credits were generated in the same CTA as the CTA in which motor vehicle diesel fuel credits are used to achieve compliance, except as provided in § 80.531(c)(5);

(ii) The motor vehicle diesel fuel credits are used in compliance with the time period limitations for credit use in this subpart;

(iii) Any credit transfer takes place no later than the August 31 following the compliance period when the motor vehicle diesel fuel credits are used;

(iv) No credit may be transferred more than twice, as follows: The first transfer by the refiner or importer who generated the credit may only be made to a refiner or importer who intends to use the credit; if the transferee cannot use the credit, it may make a second and final transfer only to a refiner or importer who intends to use the credit. In no case may a credit be transferred more than twice before being used or terminated;

(v) The credit transferor must apply any motor vehicle diesel fuel credits necessary to meet the transferor's annual compliance requirements before transferring motor vehicle diesel fuel credits to any other refinery or importer;

(vi) No motor vehicle diesel fuel credits may be transferred that would result in the transferor having a negative credit balance; and

(vii) Each transferor must supply to the transferee records indicating the year the motor vehicle diesel fuel credits were generated, the identity of the refiner (and refinery) or importer who generated the motor vehicle diesel fuel credits, the CTA of credit generation, and the identity of the transferring entity, if it is not the same entity who generated the motor vehicle diesel fuel credits.

(2) In the case of motor vehicle diesel fuel credits that have been calculated or created improperly, or are otherwise determined to be invalid, the following provisions apply:

(i) Invalid motor vehicle diesel fuel credits cannot be used to achieve compliance with the transferee's volume requirements regardless of the transferee's good faith belief that the motor vehicle diesel fuel credits were valid.

(ii) The refiner or importer who used the motor vehicle diesel fuel credits, and any transferor of the motor vehicle diesel fuel credits, must adjust their credit records, reports and compliance calculations as necessary to reflect the proper motor vehicle diesel fuel credits.

(iii) Any properly created motor vehicle diesel fuel credits existing in the transferor's credit balance after correcting the credit balance, and after the transferor applies motor vehicle diesel fuel credits as needed to meet the compliance requirements at the end of the compliance period, must first be applied to correct the invalid transfers before the transferor trades or banks the motor vehicle diesel fuel credits.

(e) *Limitations on credit use.* (1) Motor vehicle diesel fuel credits may not be used to achieve compliance with any requirements of this subpart other than the volume limit of § 80.530(a)(3), unless specifically approved by the Administrator pursuant to a hardship relief petition under § 80.560 or 80.561.

(2) A refiner or importer possessing motor vehicle diesel fuel credits must

use all motor vehicle diesel fuel credits in its possession prior to applying the credit deficit provisions of § 80.530(a)(6).

(3) No motor vehicle diesel fuel credits may be used to meet compliance with this subpart subsequent to the compliance period ending May 31, 2010.

[69 FR 39173, June 29, 2004, as amended at 71 FR 25717, May 1, 2006]

§ 80.533 How does a refiner or importer apply for a motor vehicle or non-highway baseline for the generation of NRLM credits or the use of the NRLM small refiner compliance options?

(a) A refiner or importer wishing to generate credits under § 80.535 or use the small refiner provisions under § 80.554 must submit an application to EPA that includes the information required under paragraph (c) of this section by the dates specified in paragraph (f) of this section. A refiner must apply for a motor vehicle baseline for each refinery in order to generate credits under § 80.535 and apply for a non-highway baseline for each refinery to use the provisions of § 80.554 (a), (b), or (d).

(b) The baseline must be sent to the following address: U.S. EPA—Attn: Nonroad Rule Diesel Fuel Baseline, Transportation and Regional Programs Division (6406J), 1200 Pennsylvania Avenue, NW., Washington, DC 20460 (regular mail) or U.S. EPA, Attn: Nonroad Rule Diesel Fuel Baseline, Transportation and Regional Programs Division (6406J), 1310 L Street, NW., 6th floor, Washington, DC 20005 (express mail).

(c) A baseline application must be submitted for each refinery or import facility and include the following information:

(1) A listing of the names and addresses of all refineries or import facilities owned by the company for which the refiner or importer is applying for a motor vehicle or non-highway baseline.

(2)(i) For purposes of a motor vehicle baseline volume for use in determining early credits per § 80.535(a) and (b) and for purposes of a non-highway baseline volume used in determining compliance with the provisions of § 80.554(a) or (d), the baseline volume produced during the three calendar years beginning January 1, 2003, 2004, and 2005, as calculated under paragraph (e)(1) of this section.

(ii) For purposes of a motor vehicle baseline volume for use in determining early credits per § 80.535(c) and for purposes of a non-highway baseline volume used in determining compliance with the provisions of § 80.554(b), the baseline volumes produced during the three calendar years beginning January 1, 2006, 2007, and 2008, as calculated under paragraph (e)(2) of this section.

(iii) For purposes of a total diesel baseline volume for use in determining compliance with the provisions of § 80.554(d), the baseline volumes of motor vehicle diesel fuel produced during the calendar years beginning January 1, 1998 and 1999 (per §§ 80.595(a) and 80.596(a)); and the baseline volumes of non-highway diesel fuel produced during the three calendar years beginning January 1, 2003, 2004, and 2005. This shall be calculated as stated under paragraph (f) of this section.

(3) A letter signed by the president, chief operating officer of the company, or his/her delegate, stating that the information contained in the motor vehicle or non-highway baseline application is true to the best of his/her knowledge.

(4) Name, address, phone number, facsimile number and e-mail address of a corporate contact person.

(5) For each batch of diesel fuel produced or imported during each calendar year:

(i) The date that production was completed or importation occurred for the batch and the batch designation or classification.

(ii) The batch volume.

(6) Other appropriate information as requested by EPA.

(d) *Calculation of the Motor vehicle Baseline,* B_{MV}. (1) Under paragraph (c)(2)(i) of this section, B_{MV} equals the average annual volume of motor vehicle diesel fuel produced or imported from January 1, 2003 through December 31, 2005.

(2) Under paragraph (c)(2)(ii) of this section, B_{MV} equals the average annual volume of motor vehicle diesel fuel produced or imported during the period from January 1, 2006 through December 31, 2008.

(3) For purposes of this paragraph, fuel produced for export, jet fuel (kerosene), and fuel specifically produced to meet military specifications (such as JP–4, JP–8, and F–76), shall not be included in baseline calculations.

(e) *Calculation of the Non-highway Baseline*, B_{NRLM}. For purposes of this paragraph (e), B_{MV} shall only include the average annual volume of #2D distillate fuel.

(1) Under paragraphs (c)(2)(i) and (c)(2)(iii) of this section, B_{NRLM} equals the average annual volume of all #2D distillate produced or imported from January 1, 2003 through December 31, 2005, less B_{MV} as determined in paragraph (d)(1) of this section.

(2) Under paragraph (c)(2)(ii) of this section, B_{NRLM} equals the average annual volume of MVNRLM produced or imported from January 1, 2006 through December 31, 2008, less B_{MV} as determined in paragraph (d)(2) of this section.

(3) For purposes of this paragraph (e), fuel produced for export, jet fuel, kerosene, and fuel specifically produced to meet military specification (such as JP–4, JP–8, and F–76), shall not be included in baseline calculations.

(f) *Calculation of the Total Diesel Baseline*, B_{MVNRLM}. B_{MVNRLM} equals the sum of B_{MV} (as calculated under § 80.596) plus B_{NRLM} (as calculated under paragraph (e)(1) of this section).

(g)(1) Applications submitted under paragraphs (c)(2)(i) and (c)(2)(iii) of this section must be postmarked by February 28, 2006.

(2) Applications submitted under paragraph (c)(2)(ii) of this section must be postmarked by February 28, 2009.

(h)(1) For applications submitted under paragraphs (c)(2)(i) and (c)(2)(iii) of this section, EPA will notify refiners or importers by June 1, 2006 of approval of the baselines for each of the refiner's refineries or importer's import facilities or of any deficiencies in the refiner's or importer's application.

(2) For applications submitted under paragraph (c)(2)(ii) of this section, EPA will notify refiners or importers by June 1, 2009 regarding approval of the baselines for each of the refiner's refineries or importer's import facilities of any deficiencies in the refiner's or importer's application.

(i) If at any time the motor vehicle baseline or non-highway baseline submitted in accordance with the requirements of this section is determined to be incorrect, EPA will notify the refiner or importer of the corrected baseline and any compliance calculations made on the basis of that baseline will have to be adjusted retroactively.

[69 FR 39174, June 29, 2004, as amended at 70 FR 70510, Nov. 22, 2005; 71 FR 25717, May 1, 2006]

§ 80.534 [Reserved]

§ 80.535 How are NRLM diesel fuel credits generated?

(a) *Generation of high sulfur NRLM credits from June 1, 2006 through May 31, 2007.* (1) During the period June 1, 2006 through May 31, 2007, a refiner or importer may generate credits pursuant to the provisions of this section if all of the following conditions are met:

(i) The refiner or importer notifies EPA of its intention to generate credits and the period during which it will generate credits. This notification must be received by EPA at least 30 calendar days prior to the date it begins generating credits under this section.

(ii) Each batch or partial batch of NRLM diesel fuel for which credits are claimed shall be subject to all of the provisions of this subpart for NRLM diesel fuel as if it had been produced after June 1, 2007 and before June 1, 2010.

(iii) The number of high-sulfur NRLM credits (HSC) that are generated shall be a positive number.

(2) The refiner or importer shall choose one of the following methods for calculating credits for each calculation period.

(i) For fuel that is dyed under the provisions of § 80.520, HSC equals the volume of fuel in gallons produced or imported during the period identified in paragraph (a)(1) of this section that is designated as NRLM diesel fuel and that is subject to and complies with the provisions of § 80.510(a); or

(ii) For dyed or undyed fuel that complies with the provisions of § 80.598 for a calculation period of June 1, 2006 through May 31, 2007, determine HSC as follows:

$HSC = V_{510} + V_{520} - B_{MV}$

Where:

V_{510} = The total volume of NRLM diesel fuel produced or imported during the annual calculation period that complies with the standards of § 80.510(a) or (b).

V_{520} = The total volume of motor vehicle diesel fuel produced or imported during the annual calculation period that complies with the standards of § 80.520(a) or (c).

B_{MV} = As calculated in § 80.533(d)(1).

(3) High-sulfur NRLM credits shall be generated and designated as follows:

(i) Credits shall be generated separately for each refiner or importer.

(ii) Credits may not be generated by both a foreign refiner and by an importer for the same motor vehicle diesel fuel.

(iii) Credits shall not be generated under both § 80.531 and this section for the same diesel fuel.

(iv) Any credits generated by a foreign refiner shall be generated as provided in § 80.620(c) and this section.

(4) No credits may be generated under this paragraph (a) after May 31, 2007.

(5) Any fuel for which a refiner or importer wishes to generate credits must be designated as 500 ppm sulfur NRLM diesel fuel when delivered to the next entity. The refiner may not designate the fuel as 500 ppm sulfur with the intent that it be mixed by the next entity with a batch of distillate with a higher sulfur level to create a fuel with a classification other than 500 ppm sulfur or the classification of the fuel it is mixed with (*e.g.*, it cannot mix fuel designated as 500 ppm sulfur with fuel classified as high sulfur to produce a fuel classified as 2000 ppm sulfur to meet state or local sulfur limits).

(6) The refiner or importer must submit a report to the Administrator no later than July 31, 2007. The report must demonstrate that all the NRLM diesel fuel produced or imported which generated credits met the applicable requirements of paragraphs (a)(1) through (a)(5) of this section. If the Administrator finds that such credits did not in fact meet the requirements of paragraphs (a)(1) through (a)(5) of this section, as applicable, or if the Administrator determines that there is insufficient information to determine the validity of such credits, the Administrator may deny the credits submitted in whole or in part.

(b) *Generation of high-sulfur NRLM credits by small refiners from June 1, 2006 through May 31, 2010.* (1) Notwithstanding the dates specified in paragraph (a) of this section, during the period from June 1, 2006 through May 31, 2010, a refiner that is approved by the EPA as a small refiner under § 80.551 may generate credits under paragraph (a) of this section during any compliance period as specified under § 80.599(a)(2) for diesel fuel produced or imported that is designated as NRLM diesel fuel and complies with the provisions of § 80.510(a).

(2) The small refiner must submit a report to the Administrator no later than August 31 after the end of each calculation period during which credits were generated. The report must demonstrate that all the NRLM diesel fuel produced or imported which generated credits met the applicable requirements of paragraphs (a)(1) through (a)(5) of this section. If the Administrator finds that such credits did not in fact meet the requirements of paragraphs (a)(1) through (a)(5) of this section, as applicable, or if the Administrator determines that there is insufficient information to determine the validity of such credits, the Administrator may deny the credits submitted in whole or in part.

(3) In addition, a foreign refiner that is approved by the Administrator to generate credits under § 80.554 shall comply with the requirements of § 80.620.

(c) *Generation of 500 ppm sulfur NRLM credits from June 1, 2009 through May 31, 2010.* (1) During the period of June 1, 2009 through May 31, 2010, a refiner or importer may generate credits pursuant to the provisions of this section if all of the following conditions are met:

(i) The refiner or importer notifies EPA of its intention to generate credits and the period during which it will generate credits. This notification must be received by EPA at least 30 calendar days prior to the date it begins generating credits under this section.

(ii) Each batch or partial batch of NRLM diesel fuel for which credits are claimed shall be subject to all of the

provisions of this subpart for NRLM diesel fuel as if it had been produced after June 1, 2010.

(iii) The number of 500 ppm sulfur NRLM credits in gallons that are generated, C_{500}, shall be a positive number calculated as follows:

$$C500 = V_{15} - B_{MV}$$

Where:

V_{15} = The total volume in gallons of 15 ppm diesel fuel produced or imported during the period stated under paragraph (c)(1)(i) of this section that is designated as either motor vehicle diesel fuel or NRLM diesel fuel.

B_{MV} = As determined in § 80.533(d)(2).

(2) 500 ppm sulfur NRLM credits shall be generated and designated as follows:

(i) Credits shall be generated separately for each refiner or importer.

(ii) Credits may not be generated by both a foreign refiner and by an importer for the same diesel fuel.

(iii) Credits shall not be generated under both § 80.531 and this section for the same diesel fuel.

(iv) Any credits generated by a foreign refiner shall be generated as provided in § 80.620(c) and this section.

(3) No credits may be generated under this paragraph (c) after May 31, 2010.

(4) The refiner or importer must submit a report to the Administrator no later than August 31, 2010. The report must demonstrate that all the 15 ppm sulfur NRLM diesel fuel produced or imported which generated credits met the applicable requirements of paragraphs (c)(1) through (c)(3) of this section. If the Administrator finds that such credits did not in fact meet the requirements of paragraphs (c)(1) through (c)(3) of this section, as applicable, or if the Administrator determines that there is insufficient information to determine the validity of such credits, the Administrator may deny the credits submitted in whole or in part.

(d) *Generation of 500 ppm sulfur NRLM credits by small refiners from June 1, 2009 through December 31, 2013.* (1) Notwithstanding the dates specified in paragraph (c) of this section, during the period from June 1, 2009 through December 31, 2013, a refiner that is approved by the EPA as a small refiner under § 80.551 may generate credits under paragraph (c) of this section during any compliance period as specified under § 80.599(a)(2) for diesel fuel produced or imported that is designated as NR or NRLM diesel fuel and complies with the provisions of § 80.510(b) or (c).

(2) The small refiner must submit a report to the Administrator no later than August 31 after the end of each calculation period during which credits were generated. The report must demonstrate that all the 15 ppm sulfur NR or NRLM diesel fuel produced or imported for which credits were generated met the applicable requirements of paragraphs (c)(1) through (c)(3) of this section. If the Administrator finds that such credits did not in fact meet the requirements of paragraphs (c)(1) through (c)(3) of this section, as applicable, or if the Administrator determines that there is insufficient information to determine the validity of such credits, the Administrator may deny the credits submitted in whole or in part.

(3) In addition, a foreign refiner that is approved by the Administrator to generate credits under § 80.554 shall comply with the requirements of § 80.620.

[69 FR 39175, June 29, 2004, as amended at 71 FR 25718, May 1, 2006]

§ 80.536 How are NRLM diesel fuel credits used and transferred?

(a) *Credit use stipulations.* Credits generated under § 80.535(a) and (b) may be used to meet the NRLM diesel fuel sulfur standard of § 80.510(a), and credits generated under 80.535(c) and (d) may be used to meet the NR and NRLM diesel fuel sulfur standard of 80.510(b) and (c), respectively, provided that:

(1) The credits were generated and reported according to the requirements of this subpart; and

(2) The conditions of this section are met.

(b) *Using credits generated under § 80.535.* Credits generated under § 80.535 may be used by a refiner or an importer to comply with the diesel fuel standards of § 80.510 (a), (b), and (c) by applying one credit for every gallon of diesel fuel that does not comply with the applicable standard.

(c) *Credit banking.* Credits generated may be banked for use at a later time

or may be transferred to any other refiner or importer nationwide for use as provided in paragraph (d) of this section.

(d) *Credit transfers.* (1) Credits generated under § 80.535 that are obtained from another refiner or importer may be used to comply with the diesel fuel sulfur standards of § 80.510(a), (b), and (c) if all the following conditions are met:

(i) The credits are used in compliance with the time period limitations for credit use in this subpart;

(ii) Any credit transfer is completed no later than August 31 following the compliance period when the credits are used to comply with a standard under paragraph (a) of this section;

(iii) No credit is transferred more than twice, as follows:

(A) The first transfer by the refiner or importer who generated the credit may only be made to a refiner or importer that intends to use the credit; if the transferee cannot use the credit, it may make a second and final transfer only to a refiner or importer who intends to use the credit; and

(B) In no case may a credit be transferred more than twice before it is used or it expires;

(iv) The credit transferor applies any credits necessary to meet the transferor's annual compliance requirements before transferring credits to any other refinery or importer;

(v) No credits are transferred that would result in the transferor having a negative credit balance; and

(vi) Each transferor supplies to the transferee records indicating the year the credits were generated, the identity of the refiner (and refinery) or importer that generated the credits, and the identity of the transferor, if it is not the same party that generated the credits.

(2) In the case of credits that have been calculated or created improperly, or are otherwise determined to be invalid, the following provisions apply:

(i) Invalid credits cannot be used to achieve compliance with the transferee's volume requirements regardless of the transferee's good faith belief that the credits were valid.

(ii) The refiner or importer that used the credits, and any transferor of the credits, must adjust its credit records, reports and compliance calculations as necessary to reflect the proper credits.

(iii) Any properly created credits existing in the transferor's credit balance after correcting the credit balance, and after the transferor applies credits as needed to meet the compliance requirements at the end of the calendar year, must first be applied to correct the invalid transfers before the transferor trades or banks the credits.

(e) *General limitation on credit use.* Credits may not be used to achieve compliance with any requirements of this subpart other than the standards of § 80.510(a), (b), and (c), unless specifically approved by the Administrator pursuant to a hardship relief petition under § 80.560 or § 80.561.

(f) *Use of high sulfur NRLM credits.* (1) High sulfur NRLM credits generated under § 80.535(a) or (b) may be used on a one-for-one basis to meet the NRLM diesel fuel sulfur standard of § 80.510(a) from June 1, 2007 through May 31, 2010. For example, one credit generated by the production or importation of one gallon of NRLM diesel fuel subject to the NRLM diesel fuel sulfur standard of § 80.510 (a) may be used to produce or import one gallon of NRLM diesel fuel that is exempt from the sulfur standard of § 80.510(a) during the period from June 1, 2007 through May 31, 2010.

(2) Any high sulfur NRLM diesel fuel produced after June 1, 2007 through the use of credits must—

(i) Be dyed red under the provisions of § 80.520 at the point of production or importation;

(ii) Be associated with a product transfer document that bears a unique product code as specified in § 80.590; and

(iii) Not be used to sell or deliver diesel fuel into areas specified in § 80.510(g)(1) or (g)(2).

(3) No high sulfur NRLM credits may be used subsequent to the compliance period ending May 31, 2010.

(4) Any high sulfur NRLM credits not used under the provisions of paragraph (f)(1) of this section may be converted into 500 ppm sulfur NRLM credits on a one-for-one basis for use under paragraph (g) of this section.

(g) *Use of 500 ppm sulfur NRLM credits.* (1) 500 ppm sulfur NRLM credits generated under § 80.535(c) or (d) or converted from high sulfur NRLM credits under paragraph (f)(3) of this section may be used on a one-for-one basis to meet the NR or NRLM diesel fuel sulfur standards of § 80.510(b) or (c) from June 1, 2010 through May 31, 2014. For example, one credit generated by the production or importation of one gallon of NRLM diesel fuel subject to the NRLM diesel fuel sulfur standard of § 80.510 (c) may be used to produce or import one gallon of NR diesel fuel that is subject to the sulfur standard of § 80.510(a) during the period from June 1, 2010 through May 31, 2014.

(2) Any 500 ppm sulfur NR or NRLM diesel fuel produced or imported after June 1, 2010 through the use of these credits must—

(i) Bear a unique product code as specified in § 80.590; and

(ii) Not be used to sell or deliver diesel fuel into areas specified in § 80.510(g)(1) or (g)(2).

(3) No 500 ppm sulfur NRLM credits may be used after May 31, 2014.

[69 FR 39176, June 29, 2004]

§§ 80.537–80.539 [Reserved]

GEOGRAPHIC PHASE-IN PROVISIONS

§ 80.540 How may a refiner be approved to produce gasoline under the GPA gasoline sulfur standards in 2007 and 2008?

(a) A refiner that has been approved by EPA under § 80.217 for the geographic phase-in area (GPA) gasoline sulfur content standards under § 80.216 may apply to EPA for approval to produce gasoline subject to the GPA standards in 2007 and 2008. Such application shall be submitted to EPA, at the address provided in § 80.595(b), by December 31, 2001. A foreign refiner must apply under the provisions of paragraph (n) of this section.

(b) The refiner must submit an application in accordance with the provisions of §§ 80.595 and 80.596. The application must also include information, as provided in § 80.594(c), demonstrating that starting no later than June 1, 2006, 95 percent of the motor vehicle diesel fuel produced by the refinery for United States use will comply with the 15 ppm sulfur standard under § 80.520(a)(1), and that the volume of motor vehicle diesel fuel produced will comply with the volume requirements of paragraph (e) of this section.

(c) The Administrator may approve a refiner's application to produce gasoline subject to the GPA gasoline sulfur content standards in 2007 and 2008 if the provisions of paragraph (b) of this section are satisfied. In approving an application, the Administrator shall establish a motor vehicle diesel fuel volume baseline under §§ 80.595 and 80.596.

(d) From June 1, 2006 through December 31, 2008, 95 percent of the motor vehicle diesel fuel produced by a refiner that has been approved under paragraph (c) of this section to produce gasoline subject to the GPA gasoline sulfur standards in 2007 and 2008, must be accurately designated under § 80.598 as meeting the 15 ppm sulfur standard of § 80.520(a)(1).

(e) The total volume of motor vehicle diesel fuel produced for use in the United States and designated as meeting the 15 ppm sulfur standard under paragraph (d) of this section must meet or exceed 85 percent of the baseline volume established under paragraph (c) of this section, except that for the first compliance period from June 1, 2006 through June 30, 2007, the total volume must meet or exceed 92 percent of the baseline volume.

(f) Compliance with the volume requirements in paragraph (e) of this section shall be determined each compliance period. Annual compliance periods shall be from July 1 through June 30. For the year 2006, the compliance period shall be from June 1, 2006 through June 30, 2007.

(g) If a refiner fails to comply with the requirements of paragraph (d) of this section, or if the approval of the application, including the baseline, was based on false or inaccurate information, the approval to produce gasoline subject to the GPA gasoline sulfur content standards under this section during the years 2007 and 2008 shall be void ab initio, and gasoline produced for use in the GPA must meet the gasoline sulfur content standards of subpart H of this Part as if there had been no approval to produce gasoline subject to

the GPA gasoline sulfur content standards in 2007 and 2008.

(h) If for any compliance period a refiner fails to meet the volume requirements in paragraph (e) of this section, the approval to produce gasoline subject to the GPA gasoline sulfur content standards shall be void for that compliance period and for all succeeding compliance periods, and gasoline produced for use in the GPA must meet the gasoline sulfur standards under subpart H of this subpart as if there had been no approval to produce gasoline subject to the GPA gasoline sulfur content standards under this section in 2007 and 2008.

(i) A refiner that is approved for production of gasoline subject to the GPA gasoline sulfur standards under this section in 2007 and 2008 must meet all applicable recordkeeping and reporting requirements of §§ 80.592, 80.593, and 80.594, and shall meet all the recordkeeping and reporting requirements under §§ 80.219, 80.365 and 80.370.

(j) A refiner approved to produce gasoline subject to the GPA gasoline sulfur standards under this section in 2007 and 2008 may not generate or use credits under § 80.531(a) or (e), or § 80.532 unless the approval is vacated as provided in paragraph (k) of this section.

(k) A refiner may petition the Administrator to vacate approval to produce gasoline subject to the GPA gasoline sulfur content standards in 2007 and 2008. EPA may grant such a petition, effective January 1 of the compliance period following EPA's receipt of such petition (or effective June 1, in 2006, if applicable). Upon such effective date and thereafter, gasoline produced for use in the GPA must meet the gasoline sulfur content standards under subpart H of this Part as if there had been no approval to produce gasoline subject to the GPA gasoline sulfur content standards under this section in 2007 and 2008. Upon such effective date, the refiner shall not be subject to the requirements of this section.

(l) The provisions of this section shall apply separately for each refinery of a refiner.

(m) If any refinery is approved for production of gasoline subject to GPA gasoline sulfur content standards under this section in 2007 and 2008, the GPA downstream gasoline sulfur standard under § 80.220(a)(2) shall apply as follows:

(1) During the period of February 1, 2005 through January 31, 2009, the sulfur content of GPA gasoline at any downstream location other than at a retail outlet or wholesale purchaser-consumer facility shall not exceed 326 ppm.

(2) During the period of March 1, 2005 through February 28, 2009, the sulfur content of GPA gasoline at any downstream location shall not exceed 326 ppm.

(n) A foreign refiner may apply to the Administrator to produce gasoline that is subject to the gasoline sulfur standards for GPA gasoline under § 80.216 for the compliance years 2007 and 2008. Such application must be submitted to the EPA, at the address in § 80.595(b), by December 31, 2001.

(1) The Administrator may approve such interim GPA gasoline sulfur standards for the foreign refiner provided that the foreign refiner applies for a gasoline sulfur baseline under paragraph (n)(2) of this section and complies with:

(i) The requirements of paragraphs (b) through (l) of this section;

(ii) The requirements for the import of motor vehicle diesel fuel under § 80.620; and

(iii) All applicable gasoline requirements for refiners under subpart H of this Part, including the foreign refiner requirements under § 80.410, the attest requirements of § 80.415, the recordkeeping and reporting requirements of §§ 80.365 and 80.370, the designation and product transfer document requirements of § 80.219, the sampling and testing requirements of § 80.330, and the sample retention requirements of § 80.335.

(2) The refiner must submit an application for a gasoline sulfur baseline under the provisions of §§ 80.216(a), 80.295, and 80.410(b).

(3) After review of the foreign refiner's individual refinery gasoline sulfur baseline, its individual refinery motor vehicle diesel fuel baseline, and other information submitted with the application, the Administrator may approve such baselines and the application for GPA gasoline sulfur standards for 2007 and 2008.

(o) An importer is not eligible for approval to import gasoline subject to the GPA standards in 2007 or 2008 under this section.

[66 FR 5136, Jan. 18, 2001, as amended at 69 FR 39177, June 29, 2004]

§§ 80.541–80.549 [Reserved]

SMALL REFINER HARDSHIP PROVISIONS

§ 80.550 What is the definition of a motor vehicle diesel fuel small refiner or a NRLM diesel fuel small refiner under this subpart?

(a) A motor vehicle diesel fuel small refiner is defined as any person, as defined by 42 U.S.C. 7602(e), who—

(1) Produces diesel fuel at a refinery by processing crude oil through refinery processing units; and

(2) Employed an average of no more than 1,500 people, based on the average number of employees for all pay periods from January 1, 1999, to January 1, 2000; and

(3) Had an average crude oil capacity less than or equal to 155,000 barrels per calendar day (bpcd) for 1999; or

(4) Has been approved by EPA as a small refiner under § 80.235 and continues to meet the criteria of a small refiner under § 80.225.

(b) A NRLM diesel fuel small refiner is defined as any person, as defined by 42 U.S.C. 7602(e), who—

(1) Produces diesel fuel at a refinery by processing crude oil through refinery processing units;

(2) Employed an average of no more than 1,500 people, based on the average number of employees for all pay periods from January 1, 2002, to January 1, 2003; and

(3) Had an average crude oil capacity less than or equal to 155,000 barrels per calendar day (bpcd) for 2002.

(c) Determine the number of employees and crude oil capacity under paragraphs (a) or (b) of this section, as follows:

(1) The refiner shall include the employees and crude oil capacity of any subsidiary companies, any parent company and subsidiaries of the parent company in which the parent has 50 percent or greater ownership, and any joint venture partners.

(2) For any refiner owned by a governmental entity, the number of employees and total crude oil capacity as specified in paragraph (a) of this section shall include all employees and crude oil production of the government to which the governmental entity is a part.

(3) Any refiner owned and controlled by an Alaska Regional or Village Corporation organized pursuant to the Alaska Native Claims Settlement Act (43 U.S.C. 1601) is not considered an affiliate of such entity, or with other concerns owned by such entity solely because of their common ownership.

(d)(1) Notwithstanding the provisions of paragraph (a) of this section, a refiner that acquires or reactivates a refinery that was shut down or non-operational between January 1, 1999, and January 1, 2000, may apply for motor vehicle diesel fuel small refiner status in accordance with the provisions of § 80.551(c)(1)(ii).

(2) Notwithstanding the provisions of paragraph (b) of this section, a refiner that acquires or reactivates a refinery that was shutdown or non-operational between January 1, 2002, and January 1, 2003, may apply for NRLM diesel fuel small refiner status in accordance with the provisions of § 80.551(c)(2)(ii).

(e) The following are ineligible for the small refiner provisions:

(1)(i) For motor vehicle diesel fuel, refiners with refineries built or started up after January 1, 2000.

(ii) For NRLM diesel fuel, refiners with refineries built or started up after January 1, 2003.

(2)(i) For motor vehicle diesel fuel, persons who exceed the employee or crude oil capacity criteria under this section on January 1, 2000, but who meet these criteria after that date, regardless of whether the reduction in employees or crude oil capacity is due to operational changes at the refinery or a company sale or reorganization.

(ii) For NRLM diesel fuel, persons who exceed the employee or crude oil capacity criteria under this section on January 1, 2003, but who meet these criteria after that date, regardless of whether the reduction in employees or crude oil capacity is due to operational changes at the refinery or a company sale or reorganization.

(3) Importers.

(4) Refiners who produce motor vehicle diesel fuel or NRLM diesel fuel other than by processing crude oil through refinery processing units.

(f)(1)(i) Refiners who qualify as motor vehicle diesel fuel small refiners under this section and subsequently cease production of diesel fuel from processing crude oil through refinery processing units, or employ more than 1,500 people or exceed the 155,000 bpcd crude oil capacity limit after January 1, 2004 as a result of merger with or acquisition of or by another entity, are disqualified as small refiners, except as provided for under paragraph (f)(4) of this section. If disqualification occurs, the refiner shall notify EPA in writing no later than 20 days following this disqualifying event.

(ii) Except as provided under paragraph (f)(3) of this section, any refiner whose status changes under this paragraph shall meet the applicable standards of § 80.520 within a period of up to 30 months from the disqualifying event for any of its refineries that were previously subject to the small refiner standards of § 80.552, but no later than the May 31, 2010.

(2)(i) Refiners who qualify as NRLM diesel fuel small refiners under this section and subsequently cease production of diesel fuel from crude oil, or employ more than 1,500 people or exceed the 155,000 bpcd crude oil capacity limit after January 1, 2004 as a result of merger with or acquisition of or by another entity, are disqualified as small refiners, except as provided for under paragraph (f)(4) of this section. If disqualification occurs, the refiner shall notify EPA in writing no later than 20 days following this disqualifying event.

(ii) Except as provided under paragraph (f)(3) of this section, any refiner whose status changes under this paragraph shall meet the applicable standards of § 80.510 within a period of up to 30 months of the disqualifying event for any of its refineries that were previously subject to the small refiner standards of § 80.552, but no later than the dates specified in § 80.554(a) or (b), as applicable.

(3) A refiner may apply to EPA for up to an additional six months to comply with the standards of § 80.510 or § 80.520 if more than 30 months would be required for the necessary engineering, permitting, construction, and start-up work to be completed. Such applications must include detailed technical information supporting the need for additional time. EPA will base a decision to approve additional time on information provided by the refiner and on other relevant information. In no case will EPA extend the compliance date beyond May 31, 2010 for a motor vehicle diesel fuel small refiner or beyond the dates specified in § 80.554(a) or (b), as applicable, for a NRLM diesel fuel small refiner.

(4) Disqualification under paragraphs (f)(1) or (f)(2) of this section shall not apply in the case of a merger between two previously approved small refiners.

(5) During the period of time up to 30 months provided under paragraph (f)(1)(ii) of this section, and any extension provided under paragraph (f)(3) of this section, the refiner may not generate motor vehicle diesel fuel sulfur credits under § 80.531(e). During the period of time up to 30 months provided under paragraph (f)(2)(ii) of this section, and any extension provided under paragraph (f)(3) of this section, the refiner may not generate NRLM diesel fuel sulfur credits under § 80.535(b) or (d).

(g) Notwithstanding the criteria in paragraph (a) of this section, any small refiner that has been approved by EPA as a small refiner under § 80.235 and meets the criteria of paragraph (a)(1) of this section, will be considered a small refiner under this section as well, for as long as they are a small refiner under § 80.225. The provisions of paragraph (f) of this section apply to any such refiner.

[66 FR 5136, Jan. 18, 2001, as amended at 69 FR 39177, June 29, 2004; 70 FR 40896, July 15, 2005]

§ 80.551 How does a refiner obtain approval as a small refiner under this subpart?

(a)(1)(i) Applications for motor vehicle diesel fuel small refiner status must be submitted to EPA by December 31, 2001.

(ii) Applications for NRLM diesel fuel small refiner status must be submitted to EPA by December 31, 2004.

(2)(i) In the case of a refiner who acquires or reactivates a refinery that was shutdown or non-operational between January 1, 1999, and January 1, 2000, the application for motor vehicle diesel fuel small refiner status must be submitted to EPA by June 1, 2003.

(ii) In the case of a refiner who acquires or reactivates a refinery that was shutdown or non-operational between January 1, 2002, and January 1, 2003, the application for NRLM diesel fuel small refiner status must be submitted to EPA by June 1, 2006.

(b) Applications for small refiner status must be sent via certified mail with return receipt or express mail with return receipt to: U.S. EPA—Attn: Diesel Small Refiner Status (6406J), 1200 Pennsylvania Avenue, NW., Washington, DC 20460 (certified mail/return receipt) or Attn: Diesel Small Refiner Status, Transportation and Regional Programs Division, 1310 L Street, NW., 6th floor, Washington, DC 20005 (express mail/return receipt).

(c) The small refiner status application must contain the following information for the company seeking small refiner status, plus any subsidiary companies, any parent company and subsidiaries of the parent company in which the parent has 50 percent or greater ownership, and any joint venture partners:

(1) For motor vehicle diesel fuel small refiners—

(i) A listing of the name and address of each location where any employee worked during the 12 months preceding January 1, 2000; the average number of employees at each location based upon the number of employees for each pay period for the 12 months preceding January 1, 2000; and the type of business activities carried out at each location; or

(ii) In the case of a refiner who acquires or reactivates a refinery that was shutdown or non-operational between January 1, 1999, and January 1, 2000, a listing of the name and address of each location where any employee of the refiner worked since the refiner acquired or reactivated the refinery; the average number of employees at any such acquired or reactivated refinery during each calendar year since the refiner acquired or reactivated the refinery; and the type of business activities carried out at each location.

(2) For NRLM diesel fuel small refiners—

(i) A listing of the name and address of each location where any employee worked during the 12 months preceding January 1, 2003; the average number of employees at each location based upon the number of employees for each pay period for the 12 months preceding January 1, 2003; and the type of business activities carried out at each location; or

(ii) In the case of a refiner who acquires or reactivates a refinery that was shutdown or non-operational between January 1, 2002, and January 1, 2003, a listing of the name and address of each location where any employee of the refiner worked since the refiner acquired or reactivated the refinery; the average number of employees at any such acquired or reactivated refinery during each calendar year since the refiner acquired or reactivated the refinery; and the type of business activities carried out at each location.

(3) The total corporate crude oil capacity of each refinery as reported to the Energy Information Administration (EIA) of the U.S. Department of Energy (DOE) for the most recent 12 months of operation. The information submitted to EIA is presumed to be correct. In cases where a company disagrees with this information, the company may petition EPA with appropriate data to correct the record when the company submits its application for small refiner status. EPA may accept such alternate data at its discretion.

(4) For motor vehicle diesel fuel, an indication of whether the refiner, for each refinery, is applying for—

(i) The ability to produce motor vehicle diesel fuel subject to the 500 ppm sulfur standard under § 80.520(c) or generate credits under § 80.531, pursuant to the provisions of § 80.552(a) or (b); or

(ii) An extension of the duration of its small refiner gasoline sulfur standard under § 80.553, pursuant to the provisions of § 80.552(c).

(5) For NRLM diesel fuel, an indication of whether the refiner, for each refinery, is applying for—

(i) The ability to delay compliance under § 80.554(a) or (b), or to generate NRLM diesel sulfur credits under § 80.535(b) or (d), pursuant to the provisions of § 80.554(c); or

(ii) An adjustment to its small refiner gasoline sulfur standards under § 80.240(a), pursuant to the provisions of § 80.554(d).

(6) A letter signed by the president, chief operating or chief executive officer of the company, or his/her designee, stating that the information contained in the application is true to the best of his/her knowledge.

(7) Name, address, phone number, facsimile number and e-mail address (if available) of a corporate contact person.

(d) For joint ventures, the total number of employees includes the combined employee count of all corporate entities in the venture.

(e) For government-owned refiners, the total employee count includes all government employees.

(f) Approval of small refiner status for refiners who apply under § 80.550(d) will be based on all information submitted under paragraph (c) of this section, except as provided in § 80.550(e).

(g) EPA will notify a refiner of approval or disapproval of small refiner status by letter. If disapproved, the refiner must comply with the sulfur standards in § 80.510 or 80.520, as appropriate, except as otherwise provided in this subpart.

(h) If EPA finds that a refiner provided false or inaccurate information on its application for small refiner status, upon notice from EPA the refiner's small refiner status will be void *ab initio*.

(i) Upon notification to EPA, an approved small refiner may withdraw its status as a small refiner. Effective on January 1 of the year following such notification, the small refiner will become subject to the sulfur standards in § 80.510 or 80.520, as appropriate, unless one of the other hardship provisions of this subpart apply.

[69 FR 39178, June 29, 2004, as amended at 70 FR 40896, July 15, 2005; 75 FR 22970, Apr. 30, 2010]

§ 80.552 What compliance options are available to motor vehicle diesel fuel small refiners?

(a) A refiner that has been approved by EPA as a motor vehicle diesel fuel small refiner under § 80.551(g) may produce motor vehicle diesel fuel subject to the 500 ppm sulfur standard pursuant to the provisions of § 80.530, except that the volume limits of § 80.530(a)(3) shall only apply to that volume of diesel fuel that is produced or imported during an annual compliance period that exceeds 105 percent of the baseline volume established under § 80.595 (V_{500}). The annual compliance period shall be from July 1 through June 30. For the year 2006, the compliance period shall be from June 1, 2006 through June 30, 2007, and the volume limits shall only apply to that volume V_{500} that exceeds 113 percent of the baseline volume.

(b) A refiner that has been approved by EPA as a motor vehicle diesel fuel small refiner under § 80.551(g) may generate motor vehicle diesel fuel credits pursuant to the provisions of § 80.531, except that for purposes of § 80.531(a), the term ''Credit'' shall equal V_{15}, without further adjustment.

(c) A refiner that has been approved by EPA as a motor vehicle diesel fuel small refiner under § 80.551(g) may apply for an extension of the duration of its small refiner gasoline sulfur standards pursuant to § 80.553.

(d) A refiner that produces motor vehicle diesel fuel under the provisions of paragraph (a) of this section or generates credits under the provisions of paragraph (b) of this section may not receive an extension of its small refiner gasoline sulfur standard under the provisions of paragraph (c) of this section. A refiner that receives an extension of its small refiner gasoline sulfur standard under the provisions of paragraph (c) of this section may not produce motor vehicle diesel fuel under the provisions of paragraph (a) of this section and may not generate credits under the provisions of paragraph (b) of this section.

(e) The provisions of this section shall apply separately for each refinery

owned or operated by a motor vehicle diesel fuel small refiner.

[66 FR 5136, Jan. 18, 2001, as amended at 69 FR 39179, June 29, 2004]

§ 80.553 Under what conditions may the small refiner gasoline sulfur standards be extended for a small refiner of motor vehicle diesel fuel?

(a) A refiner that has been approved by EPA for small refiner gasoline sulfur standards under § 80.240 may apply, under § 80.551, for an extension of the duration of its small refiner gasoline sulfur standards through the calendar year 2010 annual averaging period.

(b) As part of its application, the refiner must submit an application for a motor vehicle diesel fuel baseline in accordance with the provisions of §§ 80.595 and 80.596. The application must also include information, as provided in § 80.594, demonstrating that starting no later than June 1, 2006, 95 percent of the motor vehicle diesel fuel produced by the refiner will comply with the 15 ppm sulfur content standard under § 80.520(a)(1), and that the volume of motor vehicle diesel fuel produced will comply with the volume requirements of paragraph (e) of this section.

(c) The Administrator may approve an application for extension of the small refiner gasoline sulfur standards if the provisions of paragraph (b) of this section and §§ 80.595 and 80.596 are satisfied. In approving an application for extension, the Administrator shall establish a motor vehicle diesel fuel volume baseline under §§ 80.595 and 80.596.

(d) Beginning June 1, 2006, and continuing through December 31, 2010, 95 percent of the motor vehicle diesel fuel produced by a refiner that has received an extension of its small refiner gasoline sulfur standards under this section must be accurately designated under § 80.598 as meeting the 15 ppm sulfur content standard under § 80.520(a)(1).

(e) The total volume of motor vehicle diesel fuel produced for use in the United States and designated as meeting the 15 ppm sulfur content standard under paragraph (d) of this section must meet or exceed 85 percent of the baseline volume established under paragraph (c) of this section, except that for the first compliance period from June 1, 2006 through June 30, 2007, the total volume must meet or exceed 92 percent of the baseline volume.

(f) Compliance with the volume requirements in paragraph (e) of this section shall be determined each compliance period. Annual compliance periods shall be from July 1 through June 30. For the year 2006, the compliance period shall be from June 1, 2006 through June 30, 2007 and for the year 2009 the compliance period shall be from July 1, 2009 through May 31, 2010.

(g) If a refiner fails to comply with the requirements of paragraph (d) of this section, or if approval of the application, including the baseline, was based on false or inaccurate information, the extension of the applicable small refiner gasoline sulfur standards under this section shall be void ab initio, and all gasoline produced by the refinery must meet the gasoline sulfur standards under subpart H of this Part as if there had been no extension of the small refiner gasoline sulfur standards.

(h) If for any compliance period a refiner fails to meet the volume requirements in paragraph (e) of this section, the extension of the small refiner gasoline sulfur standards shall be void for that compliance period and for all succeeding compliance periods and all gasoline produced by the refinery must meet the gasoline sulfur standards under subpart H of this part as if there had been no extension of the small refiner gasoline sulfur standards under this section for such compliance periods.

(i) A refiner that is approved for an extension of the interim small refiner gasoline sulfur standards under this section must meet all applicable recordkeeping and reporting requirements of §§ 80.592, 80.593, and 80.594, and shall meet all the recordkeeping and reporting requirements under §§ 80.210, 80.365 and 80.370. Any foreign refiner shall meet all additional requirements under §§ 80.620 and 80.410.

(j) A refiner approved for the small refiner gasoline sulfur standards extension under this section may not generate or use credits under § 80.531(a) or (e), or § 80.532.

(k) A refiner may petition the Administrator to vacate an extension of

the small refiner gasoline sulfur content standards. EPA may grant such a petition, effective July 1 of the compliance period following receipt of such petition (or effective June 1, 2006, if applicable). Upon such effective date, all gasoline produced by the refiner must meet the gasoline sulfur content standards under subpart H of this part as if there had been no extension of the small refiner gasoline sulfur content standards under this section. Upon such effective date, the refiner shall not be subject to the requirements of this section.

(l) The provisions of this section shall apply separately for each refinery of a refiner.

[66 FR 5136, Jan. 18, 2001, as amended at 69 FR 39179, June 29, 2004; 71 FR 25718, May 1, 2006]

§ 80.554 What compliance options are available to NRLM diesel fuel small refiners?

(a) *Option 1:* A refiner that has been approved by EPA as a NRLM diesel fuel small refiner under § 80.551(g) may produce NRLM diesel fuel from crude oil from June 1, 2007 through May 31, 2010, that is exempt from the standards under § 80.510(a), but only for a refinery located outside the areas specified under § 80.510(g)(1).

(1) The volume of NRLM diesel fuel that is exempt from § 80.510(a) must be less than or equal to 105 percent of B_{NRLM} as defined under § 80.533, less any volume of heating oil produced.

(2) Any volume of NRLM diesel fuel in excess of the volume allowed under (a)(1) of this section will be subject to the 500 ppm sulfur standard under § 80.510(a).

(3) High-sulfur NRLM produced under this paragraph must—

(i) Be dyed red pursuant to the provisions of § 80.520 at the point of production or importation;

(ii) Be associated with a product transfer document that bears a unique product code as specified under § 80.590; and

(iii) Not be delivered into areas specified under § 80.510(g)(1).

(4) From June 1, 2007 through May 31, 2010, a refiner that has been approved by EPA as a NRLM diesel fuel small refiner under § 80.551(g) may produce at a refinery located in 80.510(g)(2) NRLM diesel fuel that is exempt from the standards under § 80.510(a) only if the refiner first obtains approval from the Administrator for a compliance plan. The compliance plan must detail how the refiner will segregate any fuel produced that does not meet the standards under § 80.510(a) from the refinery through to the ultimate consumer from fuel having any other designations and from fuel produced by any other refiner. The compliance plan must also identify all ultimate consumers to whom the refiner supplies the fuel that does not meet the standards under § 80.510(a).

(b) *Option 2:* A refiner that has been approved by EPA as a NRLM diesel fuel small refiner under § 80.551(g) may produce NR diesel fuel from crude oil from June 1, 2010, through May 31, 2014, and NRLM diesel fuel from crude oil from June 1, 2012 through May 31, 2014 that is subject to the standards under § 80.510(a), but only for a refinery located outside the areas specified under § 80.510(g)(1).

(1) The volume of NR diesel fuel that may be subject to the 500 ppm sulfur standard from June 1, 2010 through June 30, 2011 must be less than or equal to 113 percent of B_{NRLM}, and from July 1, 2011 through May 31, 2012 must be less than or equal to 96 percent of B_{NRLM}, as defined under § 80.533, less any volume of locomotive and marine diesel fuel produced.

(2) The volume of NRLM diesel fuel that may be subject to the 500 ppm sulfur standard from June 1, 2012 through June 30, 2013 must be less than or equal to 113 percent of B_{NRLM}, and from July 1, 2013 through May 31, 2014 must be less than or equal to 96 percent of B_{NRLM}, as defined under § 80.533.

(3) NRLM diesel fuel produced in excess of the volume allowed under paragraph (b)(1) of this section will be subject to the standards under § 80.510(b) and (c).

(4) 500 ppm sulfur NRLM diesel fuel produced under this paragraph must—

(i) Bear a unique product code as specified under § 80.590; and

(ii) Not be sold or delivered into areas specified under § 80.510(g)(1).

(5) From June 1, 2010 through May 31, 2012, for NR diesel fuel, and from June

1, 2012 through May 31, 2014 for NRLM diesel fuel, a refiner that has been approved by EPA as a NRLM diesel fuel small refiner under § 80.551(g) may produce, at a refinery located in Alaska, NR and NRLM diesel fuel, as applicable, from crude oil that is subject to the standards of § 80.510(a), only if the refiner first obtains approval from the Administrator for a compliance plan. The compliance plan must detail how the refiner will segregate any fuel produced subject to the standards under § 80.510(a) from the refinery through to the ultimate consumer from fuel having any other designations and from fuel produced by any other refiner. The compliance plan must also identify all ultimate consumers to whom the refiner supplies the fuel that does not meet the standards under § 80.510(a).

(c) *Option 3:* A refiner that has been approved by EPA as a NRLM diesel fuel small refiner under § 80.551(g) may generate diesel fuel credits under the provisions of § 80.535(b) and (d), except as provided in paragraph (d)(1) of this section.

(d) *Option 4:* (1) In lieu of Options 1, 2, and 3 of this section, a refiner that has been approved by EPA as a NRLM diesel fuel small refiner under § 80.551(g) may choose to adjust its small refiner gasoline sulfur standards, subject to the following conditions:

(i) From June 1, 2006 until the expiration of the refiner's small refiner gasoline sulfur standards (through December 31, 2007 or 2010) 95 percent of the total MVNRLM diesel fuel produced by the refiner must be accurately designated under § 80.598(a) as meeting the 15 ppm sulfur standard of § 80.510(b).

(ii) The refiner must produce MVNRLM diesel fuel each year or partial year under paragraph (d)(1)(i) of this section at a volume that is equal to or greater than 85 percent of B_{MVNRLM}, as defined in § 80.533, calculated on an annual basis.

(2)(i) For a refiner meeting the conditions of paragraph (d)(1) of this section, beginning January 1, 2004, the applicable small refiner's annual average and per-gallon cap gasoline sulfur standards will be the standards of § 80.240(a) increased by a factor of 1.20 for the duration of the refiner's small refiner gasoline sulfur standards under § 80.240(a) or § 80.553 (*i.e.*, through calendar years 2007 or 2010).

(ii) In no case may the per-gallon cap exceed 450 ppm.

(3)(i) If the refiner fails to produce the necessary volume of 15 ppm sulfur MVNRLM diesel fuel by June 1, 2006 and every year thereafter through the deadlines specified under paragraph (d)(1)(i) of this section, the refiner must report this in its annual report under § 80.604, and the adjustment of gasoline sulfur standards under paragraph (d)(2)(i) of this section will be considered void as of January 1, 2004.

(ii) If such a refiner had produced gasoline above its interim gasoline sulfur standard of § 80.240(a) prior to June 1, 2006, such fuel will not be considered in violation of the small refiner standards under § 80.240(a), provided the refiner obtains and uses a quantity of gasoline sulfur credits equal to the volume of gasoline exceeding the small refiner standards multiplied by the number of parts per million by which the gasoline exceeded the small refiner standards.

(e) *Multiple refineries.* The provisions of this section shall apply separately for each refinery owned or operated by a NRLM diesel fuel small refiner.

(f) *Other provisions.* From June 1, 2007 through May 31, 2010, a refiner who is an approved motor vehicle diesel fuel small refiner under § 80.550(a) but does not qualify as a NRLM diesel fuel small refiner under § 80.550(b) may produce NRLM diesel fuel that is exempt from the per-gallon sulfur standard and the cetane or aromatics standard of § 80.510(a). This exemption does not apply to diesel fuel sold or intended for sale in the areas listed in § 80.510(g)(1) or (g)(2). From June 1, 2010 through May 31, 2012, NR and LM diesel fuel produced by such refiners is subject to the standards under § 80.510(b) and beginning June 1, 2012, all NRLM diesel fuel is subject to the standards under § 80.510(c).

[69 FR 39179, June 29, 2004, as amended at 71 FR 25718, May 1, 2006]

§ 80.555 What provisions are available to a large refiner that acquires a small refiner or one or more of its refineries?

(a) In the case of a refiner without approved small refiner status who acquires a refinery from a refiner with approved status as a motor vehicle diesel fuel small refiner or a NRLM diesel fuel small refiner under § 80.551(g), the applicable small refiner provisions of §§ 80.552 and 80.554 may apply to the acquired refinery for a period of up to 30 months from the date of acquisition of the refinery. In no case shall this period extend beyond May 31, 2010 for a refinery acquired from a motor vehicle diesel fuel small refiner or beyond the dates specified in § 80.554(a) or (b), as applicable, for a refinery acquired from a NRLM diesel fuel small refiner.

(b) A refiner may apply to EPA for up to an additional six months to comply with the standards of § 80.510 or 80.520 for the acquired refinery if more than 30 months would be required for the necessary engineering, permitting, construction, and start-up work to be completed. Such applications must include detailed technical information supporting the need for additional time. EPA will base a decision to approve additional time on information provided by the refiner and on other relevant information. In no case will EPA extend the compliance date beyond May 31, 2010 for a refinery acquired from a motor vehicle diesel fuel small refiner or beyond the dates specified in § 80.554(a) or (b), as applicable, for a refinery acquired from a NRLM diesel fuel small refiner.

(c) Refiners who acquire a refinery from a refiner with approved status as a motor vehicle diesel fuel small refiner or a NRLM diesel fuel small refiner under § 80.551(g), shall notify EPA in writing no later than 20 days following the acquisition.

[69 FR 39180, June 29, 2004]

§§ 80.556–80.559 [Reserved]

OTHER HARDSHIP PROVISIONS

§ 80.560 How can a refiner seek temporary relief from the requirements of this subpart in case of extreme hardship circumstances?

(a) EPA may, at its discretion, grant a refiner of crude oil that processes crude oil through refinery processing units, for one or more of its refineries, temporary relief from some or all of the provisions of this subpart. Such relief shall be no less stringent than the small refiner compliance options specified in § 80.552 for motor vehicle diesel fuel and § 80.554 for NRLM diesel fuel. EPA may grant such relief provided that the refiner demonstrates that—

(1) Unusual circumstances exist that impose extreme hardship and significantly affect the refiner's ability to comply by the applicable date; and

(2) It has made best efforts to comply with the requirements of this subpart.

(b)(1) For motor vehicle diesel fuel, applications must be submitted to EPA by June 1, 2002 to the following address: U.S. EPA—Attn: Diesel Hardship, Transportation and Regional Programs Division (6406J), 1200 Pennsylvania Avenue, NW., Washington, DC 20460 (certified mail/return receipt) or Attn: Diesel Hardship, Transportation and Regional Programs Division, 1310 L Street, NW., 6th floor, Washington, DC 20005 (express mail/return receipt). EPA reserves the right to deny applications for appropriate reasons, including unacceptable environmental impact. Approval to distribute motor vehicle diesel fuel not subject to the 15 ppm sulfur standard may be granted for such time period as EPA determines is appropriate, but shall not extend beyond May 31, 2010.

(2) For NRLM diesel fuel, applications must be submitted to EPA by June 1, 2005 to the following address: U.S. EPA—Attn: Diesel Hardship, Transportation and Regional Programs Division (6406J), 1200 Pennsylvania Avenue, NW., Washington, DC 20460 (certified mail/return receipt) or Attn: Diesel Hardship, Transportation and Regional Programs Division, 1310 L Street, NW., 6th floor, Washington, DC 20005 (express mail/return receipt). EPA reserves the right to deny applications

for appropriate reasons, including unacceptable environmental impact. Approval to distribute NRLM diesel fuel not subject to the 500 ppm sulfur standard may be granted for such time period as EPA determines is appropriate, but shall not extend beyond May 31, 2010 for NR diesel fuel and May 31, 2012 for NRLM diesel fuel. Approval to distribute NRLM diesel fuel not subject to the 15 ppm sulfur standard may be granted for such time period as EPA determines is appropriate, but shall not extend beyond May 31, 2014.

(c) Applications must include a plan demonstrating how the refiner will comply with the requirements of this subpart as expeditiously as possible. The plan shall include a showing that contracts are or will be in place for engineering and construction of desulfurization equipment a plan for applying for and obtaining any permits necessary for construction or operation, projected timeline for beginning and completing construction, and for beginning actual operation of such equipment, and a description of plans to obtain necessary capital, and a detailed estimate of when the requirements of this subpart will be met.

(d) Applicants must provide, at a minimum, the following information:

(1) Detailed description of efforts to obtain capital for refinery investments and efforts made to obtain credits for compliance under § 80.531 for motor vehicle diesel fuel or §§ 80.535 through 80.536 for NRLM diesel fuel;

(2) Bond rating of entity that owns the refinery (in the case of joint ventures, include the bond rating of the joint venture entity and the bond ratings of all partners; in the case of corporations, include the bond ratings of any parent or subsidiary corporations); and

(3) Estimated capital investment needed to comply with the requirements of this subpart by the applicable date.

(e) In addition to the application requirements of paragraph (b) through (d) of this section, a refiner's application for temporary relief under this paragraph (e) must also include a compliance plan. Such compliance plan shall demonstrate how the refiner will engage in a quality assurance testing program, where appropriate, to ensure that the following conditions are met:

(1)(i) Its motor vehicle diesel fuel subject solely to the sulfur standards under § 80.520(c) has not caused motor vehicle diesel fuel subject to the 15 ppm sulfur standard § 80.520(a)(1) to fail to comply with that standard; or

(ii) Its NRLM diesel fuel subject solely to the 500 ppm sulfur standard under § 80.510(a) has not caused NRLM diesel fuel subject to the 15 ppm sulfur standard under § 80.510(b) or (c) to fail to comply with that standard.

(2) The quality assurance program must at least include periodic sampling and testing at the party's own facilities and at downstream facilities in the refiner's or importer's diesel fuel distribution system, to determine compliance with the applicable sulfur standards for both categories of motor vehicle diesel fuel; examination at the party's own facilities and at applicable downstream facilities, of product transfer documents to confirm appropriate transfers and deliveries of both products; and inspection of retailer and wholesale purchaser-consumer pump stands for the presence of the labels and warning signs required under this section. Any violations that are discovered shall be reported to EPA within 48 hours of discovery.

(f) Applications under this section must be accompanied by:

(1) A letter signed by the president, chief operating or chief executive officer of the company, or his/her designee, stating that the information contained in the application is true to the best of his/her knowledge.

(2) The name, address, phone number, facsimile number and e-mail address of a corporate contact person.

(g) Applicants must also provide any other relevant information requested by EPA.

(h) Refiners who are granted a hardship relief standard for any refinery and importers of fuel subject to temporary foreign refiner relief standards, must comply with the requirements of § 80.561(f).

(i) EPA may impose any reasonable conditions on waivers under this section, including limitations on the refinery's volume of motor vehicle diesel

fuel and NRLM diesel fuel subject to temporary refiner relief standards.

(j) The provisions of this section are available only to refineries that produce diesel fuel from crude.

(k) The individual refinery sulfur standard and the compliance plan will be approved or disapproved by the Administrator, and approval will be effective when the refiner receives an approval letter from EPA. Unless approved, the refiner or, where applicable, the importer must comply with the motor vehicle diesel fuel standard under § 80.520(a)(1) by the appropriate compliance date specified in § 80.500 or the NRLM diesel fuel standards and compliance dates under § 80.510(a), (b), and (c) as applicable.

(l) If EPA finds that a refiner provided false or inaccurate information on its application for hardship relief, EPA's approval of the refiners application will be void *ab initio*.

[66 FR 5136, Jan. 18, 2001, as amended at 69 FR 39181, June 29, 2004]

§ 80.561 How can a refiner or importer seek temporary relief from the requirements of this subpart in case of extreme unforeseen circumstances?

In appropriate extreme, unusual, and unforseen circumstances (for example, natural disaster or refinery fire) which are clearly outside the control of the refiner or importer and which could not have been avoided by the exercise of prudence, diligence, and due care, EPA may permit a refiner or importer, for a brief period, to distribute motor vehicle diesel fuel or NRLM diesel fuel which does not meet the requirements of this subpart if:

(a) It is in the public interest to do so (e.g., distribution of the nonconforming diesel fuel is necessary to meet projected shortfalls which cannot otherwise be compensated for);

(b) The refiner or importer exercised prudent planning and was not able to avoid the violation and has taken all reasonable steps to minimize the extent of the nonconformity;

(c) The refiner or importer can show how the requirements for motor vehicle diesel fuel or NRLM diesel fuel will be expeditiously achieved;

(d) The refiner or importer agrees to make up any air quality detriment associated with the nonconforming motor vehicle diesel fuel or NRLM diesel fuel, where practicable;

(e) The refiner or importer pays to the U.S. Treasury an amount equal to the economic benefit of the nonconformity minus the amount expended pursuant to paragraph (d) of this section, in making up the air quality detriment; and

(f)(1) In the case of motor vehicle diesel fuel distributed under this section that does not meet the 15 ppm sulfur standard under § 80.520(a)(1), such diesel fuel shall not be distributed for use in model year 2007 or later motor vehicles, and must meet all the requirements and prohibitions of this subpart applicable to diesel fuel meeting the sulfur standard under § 80.520(c), or to diesel fuel that is not motor vehicle diesel fuel, as applicable.

(2) In the case of NRLM diesel fuel distributed under this section from June 1, 2007 through May 31, 2010 that does not meet the 500 ppm sulfur standard under § 80.510(a), such diesel fuel must meet the requirements and prohibitions applicable to high sulfur NRLM credit fuel under § 80.536(f)(1)(i) and (ii).

(3) In the case of NR diesel fuel distributed under this section after May 31, 2010 that does not meet the 15 ppm sulfur standard under § 80.510(b), such diesel fuel shall not be distributed for use in model year 2011 or later nonroad engines, and must meet all the requirements and prohibitions of this subpart applicable to diesel fuel meeting the sulfur standard under § 80.510(a) for NRLM diesel fuel.

(4) In the case of NRLM diesel fuel distributed under this section after May 31, 2012 that does not meet the 15 ppm sulfur standard under § 80.510(c), such diesel fuel shall not be distributed for use in model year 2011 or later nonroad engines, and must meet all the requirements and prohibitions of this subpart applicable to diesel fuel meeting the sulfur standard under § 80.510(a) for NRLM diesel fuel.

[66 FR 5136, Jan. 18, 2001, as amended at 69 FR 39181, June 29, 2004; 75 FR 22970, Apr. 30, 2010]

§§ 80.562–80.569 [Reserved]

LABELING REQUIREMENTS

§ 80.570 What labeling requirements apply to retailers and wholesale purchaser-consumers of diesel fuel beginning June 1, 2006?

(a) From June 1, 2006 through November 30, 2010, any retailer or wholesale purchaser-consumer who sells, dispenses, or offers for sale or dispensing, motor vehicle diesel fuel subject to the 15 ppm sulfur standard of § 80.520(a)(1), must affix the following conspicuous and legible label, in block letters of no less than 24-point bold type, and printed in a color contrasting with the background, to each pump stand:

ULTRA-LOW SULFUR HIGHWAY DIESEL FUEL (15 ppm Sulfur Maximum)

Required for use in all model year 2007 and later highway diesel vehicles and engines.

Recommended for use in all diesel vehicles and engines.

(b) From June 1, 2006, through November 30, 2010, any retailer or wholesale purchaser-consumer who sells, dispenses, or offers for sale or dispensing, motor vehicle diesel fuel subject to the 500 ppm sulfur standard of § 80.520(c), must prominently and conspicuously display in the immediate area of each pump stand from which motor vehicle fuel subject to the 500 ppm sulfur standard is offered for sale or dispensing, the following legible label, in block letters of no less than 24-point bold type, printed in a color contrasting with the background:

LOW SULFUR HIGHWAY DIESEL FUEL (500 ppm Sulfur Maximum)

WARNING

Federal law prohibits use in model year 2007 and later highway vehicles and engines.

Its use may damage these vehicles and engines.

(c) From June 1, 2006 through May 31, 2007, any retailer or wholesale purchaser-consumer who sells, dispenses, or offers for sale or dispensing, diesel fuel for non-motor vehicle equipment that does not meet the standards for motor vehicle diesel fuel, must affix the following conspicuous and legible label, in block letters of no less than 24-point bold type, and printed in a color contrasting with the background, to each pump stand:

NON-HIGHWAY DIESEL FUEL (MAY EXCEED 500 PPM SULFUR)

WARNING

Federal law *prohibits* use in highway vehicles or engines.

Its use may damage these vehicles and engines.

(d) The labels required by paragraphs (a) through (c) of this section must be placed on the vertical surface of each pump housing and on each side that has gallon and price meters. The labels shall be on the upper two-thirds of the pump, in a location where they are clearly visible.

(e) Alternative labels to those specified in paragraphs (a) through (c) of this section may be used as approved by EPA.

[69 FR 39182, June 29, 2004, as amended at 71 FR 25718, May 1, 2006; 75 FR 22970, Apr. 30, 2010]

§ 80.571 What labeling requirements apply to retailers and wholesale purchaser-consumers of NRLM diesel fuel or heating oil beginning June 1, 2007?

Any retailer or wholesale purchaser-consumer who sells, dispenses, or offers for sale or dispensing nonroad, locomotive or marine (NRLM) diesel fuel (including nonroad (NR) and locomotive or marine (LM)), or heating oil, must prominently and conspicuously display in the immediate area of each pump stand from which non-highway diesel fuel is offered for sale or dispensing, one of the following legible labels, as applicable, in block letters of no less than 24-point bold type, printed in a color contrasting with the background:

(a) From June 1, 2007 through May 31, 2010, for pumps dispensing NRLM diesel fuel meeting the 15 ppm sulfur standard of § 80.510(b):

ULTRA-LOW SULFUR NON-HIGHWAY DIESEL FUEL (15 PPM SULFUR MAXIMUM)

Required for use in all model year 2011 and newer nonroad diesel engines.

Recommended for use in all nonroad, locomotive, and marine diesel engines.

WARNING

Federal Law *prohibits* use in highway vehicles or engines.

(b) From June 1, 2007, through September 30, 2010, for pumps dispensing NRLM diesel fuel meeting the 500 ppm sulfur standard of § 80.510(a):

LOW SULFUR NON-HIGHWAY DIESEL FUEL (500 ppm Sulfur Maximum)

WARNING

Federal Law prohibits use in highway vehicles or engines.

(c) From June 1, 2007 through September 30, 2010, for pumps dispensing NRLM diesel fuel not meeting, or not offered as meeting, the 500 ppm sulfur standard of § 80.510(a) or the 15 ppm sulfur standard of § 80.510(b):

HIGH SULFUR NON-HIGHWAY DIESEL FUEL (MAY EXCEED 500 PPM SULFUR)

WARNING

Federal law *prohibits* use in highway vehicles or engines.

May damage nonroad diesel engines required to use low-sulfur or ultra-low sulfur diesel fuel.

(d) From June 1, 2007, and beyond, for pumps dispensing non-motor vehicle diesel fuel for use other than in nonroad, locomotive, or marine engines, such as for use as heating oil:

HEATING OIL (May Exceed 500 ppm Sulfur)

WARNING

Federal law prohibits use in highway vehicles or engines, or in nonroad, locomotive, or marine diesel engines.

Its use may damage these diesel engines.

(e) The labels required by paragraphs (a) through (d) of this section must be placed on the vertical surface of each pump housing and on each side that has gallon and price meters. The labels shall be on the upper two-thirds of the pump, in a location where they are clearly visible.

(f) Alternative labels to those specified in paragraphs (a) through (d) of this section may be used as approved by EPA.

[69 FR 39182, June 29, 2004, as amended at 71 FR 25718, May 1, 2006; 75 FR 22970, Apr. 30, 2010]

§ 80.572 What labeling requirements apply to retailers and wholesale purchaser-consumers of NR and NRLM diesel fuel and heating oil beginning June 1, 2010?

Any retailer or wholesale purchaser-consumer who sells, dispenses, or offers for sale or dispensing nonroad, locomotive or marine (NRLM) diesel fuel (including nonroad (NR) and locomotive or marine (LM)), or heating oil, must prominently and conspicuously display in the immediate area of each pump stand from which non-highway diesel fuel is offered for sale or dispensing, one of the following legible labels, as applicable, in block letters of no less than 24-point bold type, printed in a color contrasting with the background:

(a) From June 1, 2010, through September 31, 2014, any retailer or wholesale purchaser-consumer who sells, dispenses, or offers for sale or dispensing, motor vehicle diesel fuel subject to the 15 ppm sulfur standard of § 80.520(a)(1), must affix the following conspicuous and legible label, in block letters of no less than 24-point bold type, and printed in a color contrasting with the background, to each pump stand:

ULTRA-LOW SULFUR HIGHWAY DIESEL FUEL (15 ppm Sulfur Maximum)

Required for use in all highway diesel vehicles and engines.

Recommended for use in all diesel vehicles and engines.

(b) From June 1, 2010, through September 30, 2012, for pumps dispensing NR diesel fuel subject to the 15 ppm sulfur standard of § 80.510(b):

ULTRA-LOW SULFUR NON-HIGHWAY DIESEL FUEL (15 ppm Sulfur Maximum)

Required for use in all model year 2011 and later nonroad diesel engines.

Recommended for use in all other non-highway diesel engines.

WARNING

Federal law prohibits use in highway vehicles or engines.

(c) From June 1, 2010 through September 30, 2014, for pumps dispensing NRLM diesel fuel subject to the 500 ppm sulfur standard of § 80.510(a):

LOW SULFUR NON-HIGHWAY DIESEL FUEL (500 PPM SULFUR MAXIMUM)

WARNING

Federal law *prohibits* use in all model year 2011 and newer nonroad engines.

May damage model year 2011 and newer nonroad engines.

Federal law *prohibits* use in highway vehicles or engines.

(d) From June 1, 2010 through September 30, 2012, for pumps dispensing LM diesel fuel subject to the 500 ppm sulfur standard of § 80.510(a):

LOW SULFUR LOCOMOTIVE AND MARINE DIESEL FUEL (500 PPM SULFUR MAXIMUM)

WARNING

Federal law *prohibits* use in nonroad engines or in highway vehicles or engines.

(e) The labels required by paragraphs (a) through (d) of this section must be placed on the vertical surface of each pump housing and on each side that has gallon and price meters. The labels shall be on the upper two-thirds of the pump, in a location where they are clearly visible.

(f) Alternative labels to those specified in paragraphs (a) through (d) of this section may be used as approved by EPA.

[69 FR 39183, June 29, 2004, as amended at 71 FR 25718, May 1, 2006; 75 FR 22970, Apr. 30, 2010]

§ 80.573 What labeling requirements apply to retailers and wholesale purchaser-consumers of NRLM diesel fuel and heating oil beginning June 1, 2012?

Any retailer or wholesale purchaser-consumer who sells, dispenses, or offers for sale or dispensing nonroad, locomotive or marine (NRLM) diesel fuel (including nonroad (NR) and locomotive or marine (LM)), or heating oil, must prominently and conspicuously display in the immediate area of each pump stand from which non-highway diesel fuel is offered for sale or dispensing, one of the following legible labels, as applicable, in block letters of no less than 24-point bold type, printed in a color contrasting with the background:

(a) From June 1, 2012, through September 30, 2014, for pumps dispensing NRLM diesel fuel subject to the 15 ppm sulfur standard of § 80.510(c):

ULTRA-LOW SULFUR NON-HIGHWAY DIESEL FUEL (15 ppm Sulfur Maximum)

Required for use in all model year 2011 and later nonroad diesel engines.

Recommended for use in all other non-highway diesel engines.

WARNING

Federal law prohibits use in highway vehicles or engines.

(b) The labels required by paragraph (a) of this section must be placed on the vertical surface of each pump housing and on each side that has gallon and price meters. The labels shall be on the upper two-thirds of the pump, in a location where they are clearly visible.

(c) Alternative labels to those specified in paragraph (a) of this section may be used as approved by EPA.

[69 FR 39183, June 29, 2004, as amended at 71 FR 25718, May 1, 2006; 75 FR 22970, Apr. 30, 2010]

§ 80.574 What labeling requirements apply to retailers and wholesale purchaser-consumers of ECA marine fuel beginning June 1, 2014?

(a) Any retailer or wholesale purchaser-consumer who sells, dispenses, or offers for sale or dispensing ECA marine fuel must prominently and conspicuously display in the immediate area of each pump stand from which ECA marine fuel is offered for sale or dispensing, one of the following legible labels, as applicable, in block letters of no less than 24-point bold type, printed in a color contrasting with the background:

(1) From June 1, 2014, and beyond, for pumps dispensing ECA marine fuel subject to the 1,000 ppm sulfur standard of § 80.510(k):

1,000 ppm SULFUR ECA MARINE FUEL (1,000 ppm Sulfur Maximum)

For use in Category 3 (C3) marine vessels only.

WARNING

Federal law prohibits use in any engine that is not installed on a C3 marine vessel; use of fuel oil with a sulfur content greater than 1,000 ppm in an ECA is prohibited except as allowed by 40 CFR Part 1043.

(2) The labels required by paragraph (a)(1) of this section must be placed on the vertical surface of each pump housing and on each side that has gallon and price meters. The labels shall be on the upper two-thirds of the pump, in a location where they are clearly visible.

(b) Alternative labels to those specified in paragraph (a) of this section may be used as approved by EPA.

(1) *For U.S. Mail:* U.S. EPA, Attn: Diesel Sulfur Alternative Label Request, 6406J, 1200 Pennsylvania Avenue, NW., Washington, DC 20460.

(2) *For overnight or courier services:* U.S. EPA, Attn: Diesel Sulfur Alternative Label Request, 6406J, 1310 L Street, NW., 6th Floor, Washington, DC 20005. (202) 343–9038.

[75 FR 22971, Apr. 30, 2010]

§§ 80.575–80.579 [Reserved]

SAMPLING AND TESTING

§ 80.580 What are the sampling and testing methods for sulfur?

The sulfur content of diesel fuel and diesel fuel additives is to be determined in accordance with this section.

(a) *Sampling method.* The applicable sampling methodology is provided in § 80.330(b).

(b) *Test method for sulfur.* (1) For ECA marine fuel subject to the 1,000 ppm sulfur standard of § 80.510(k), sulfur content may be determined using ASTM D2622 (incorporated by reference, *see* paragraph (e) of this section).

(2) For motor vehicle diesel fuel and diesel fuel additives subject to the 500 ppm sulfur standard of § 80.520(c), and NRLM diesel fuel subject to the 500 ppm sulfur standard of § 80.510(a)(1), sulfur content may be determined using ASTM D2622 (incorporated by reference, see paragraph (e) of this section).

(3) Beginning August 30, 2004, for motor vehicle diesel fuel and diesel fuel additives subject to the 15 ppm sulfur standard of § 80.520(a)(1), sulfur content may be determined using any test method approved under § 80.585.

(4) Beginning August 30, 2004, for NRLM diesel fuel and diesel fuel additives subject to the 15 ppm standard of § 80.510(b), sulfur content may be determined using any test method approved under § 80.585.

(c) *Alternative test methods for sulfur.* (1) *Options for testing sulfur content of 1,000 ppm diesel fuel.* (i) For ECA marine fuel subject to the 1,000 ppm sulfur standard of § 80.510(k), sulfur content may be determined using ASTM D4294, ASTM D5453, or ASTM D6920 (all incorporated by reference, *see* paragraph (e) of this section), provided that the refiner or importer test result is correlated with the appropriate method specified in paragraph (b)(1) of this section; or

(ii) For ECA marine fuel subject to the 1,000 ppm sulfur standard of § 80.510(k), sulfur content may be determined using any test method approved under § 80.585.

(2) *Options for testing sulfur content of 500 ppm diesel fuel.* (i) For motor vehicle diesel fuel and diesel fuel additives subject to the 500 ppm sulfur standard of § 80.520(c), and for NRLM diesel fuel subject to the 500 ppm sulfur standard of § 80.510(a), sulfur content may be determined using ASTM D4294, ASTM D5453, or ASTM D6920 (all incorporated by reference, see paragraph (e) of this section), provided that the refiner or importer test result is correlated with the appropriate method specified in paragraph (b)(2) of this section; or

(ii) For motor vehicle diesel fuel and diesel fuel additives subject to the 500 ppm sulfur standard of § 80.520(c), and for NRLM diesel fuel subject to the 500 ppm sulfur standard of § 80.510(a), sulfur content may be determined using any test method approved under § 80.585.

(d) *Adjustment factor for downstream test results.* (1) Except as specified in paragraph (d)(1)(i) of this section, an adjustment factor of negative two ppm

sulfur shall be applied to the test results from any testing of motor vehicle diesel fuel or NRLM diesel fuel downstream of the refinery or import facility, to account for test variability, but only for testing of motor vehicle diesel fuel or NRLM diesel fuel identified as subject to the 15 ppm sulfur standard of § 80.510(b) or § 80.520(a)(1).

(i) Prior to October 15, 2008 an adjustment factor of negative three ppm sulfur shall be applied to the test results, to account for test variability, but only for testing of motor vehicle diesel fuel or NRLM diesel fuel identified as subject to the 15 ppm sulfur standard of § 80.510(b) or § 80.520(a)(1).

(ii) [Reserved]

(2) In addition to the adjustment factor provided in paragraph (d)(1)(i) of this section, prior to September 1, 2006, an adjustment factor of negative 7 ppm shall be applied to the test results from any testing of motor vehicle diesel fuel downstream of the refinery or import facility, to facilitate the transition to ULSD fuel, but only for testing of motor vehicle diesel fuel identified as subject to the 15 ppm sulfur standard of § 80.520(a)(1).

(3) In addition to the adjustment factor provided in paragraph (d)(1)(i) of this section, prior to October 15, 2006, an adjustment factor of negative 7 ppm shall be applied to the test results from any testing of motor vehicle diesel fuel at any retail outlet or wholesale purchaser-consumer facility, to facilitate the transition to ULSD fuel, but only for testing of motor vehicle diesel fuel identified as subject to the 15 ppm sulfur standard of § 80.520(a)(1).

(e) *Materials incorporated by reference.* The Director of the Federal Register approved the incorporation by reference of the document listed in this section as prescribed in 5 U.S.C. 552(a) and 1 CFR part 51. Anyone may inspect copies at the U.S. EPA, Air and Radiation Docket and Information Center, 1301 Constitution Ave., NW., Room B102, EPA West Building, Washington, DC 20460, under EPA docket ID Number EPA–HQ–OAR–2008–0558, or at the National Archives and Records Administration (NARA). The telephone number for the Air Docket Public Reading Room is (202) 566–1742. For information on the availability of this material at NARA, call 202–741–6030 or go to: *http://www.archives.gov/federal_register/code_of_federal_regulations/ibr_locations.html.* For further information on these test methods, please contact the Environmental Protection Agency at 734–214–4582.

(1) *ASTM material.* Anyone may purchase copies of these materials from the American Society for Testing and Materials (ASTM), 100 Barr Harbor Dr., West Conshohocken, PA 19428–2959, or by contacting ASTM customer service at 610–832–9585, or by contacting the e-mail address of *service@astm.org* from the ASTM Web site of *http://www.astm.org*.

(i) ASTM standard method D2622–05 (''ASTM D2622''), Standard Test Method for Sulfur in Petroleum Products by Wavelength Dispersive X-Ray Fluorescence Spectrometry, approved November 1, 2005.

(ii) [Reserved]

(iii) ASTM standard method D4294–03 (''ASTM D4294), Standard Test Method for Sulfur in Petroleum and Petroleum Products by Energy Dispersive X-ray Fluorescence Spectrometry, approved November 1, 2003.

(iv) ASTM standard method D5453–08a (''ASTM D5453''), Standard Test Method for Determination of Total Sulfur in Light Hydrocarbons, Spark Ignition Engine Fuel, Diesel Engine Fuel, and Engine Oil by Ultraviolet Fluorescence, approved February 1, 2008.

(v) ASTM standard method D6920–07 (''ASTM D6920''), Standard Test Method for Total Sulfur in Naphthas, Distillates, Reformulated Gasolines, Diesels, Biodiesels, and Motor Fuels by Oxidative Combustion and Electrochemical Detection, approved December 1, 2007.

(2) [Reserved]

[69 FR 39184, June 29, 2004, as amended at 70 FR 40896, July 15, 2005; 70 FR 70510, Nov. 22, 2005; 71 FR 16500, Apr. 3, 2006; 71 FR 25719, May 1, 2006; 73 FR 74357, Dec. 8, 2008; 75 FR 22971, Apr. 30, 2010]

§ 80.581 What are the batch testing and sample retention requirements for motor vehicle diesel fuel, NRLM diesel fuel, and ECA marine fuel?

(a) Beginning on June 1, 2006 (or earlier pursuant to § 80.531), for motor vehicle diesel fuel, and beginning June 1, 2010 (or earlier pursuant to § 80.535), for NRLM diesel fuel, and beginning June 1, 2014, for ECA marine fuel, each refiner and importer shall collect a representative sample from each batch of motor vehicle or NRLM diesel fuel produced or imported and subject to the 15 ppm sulfur content standard, or ECA marine fuel subject to the 1,000 ppm sulfur content standard. Batch, for the purposes of this section, means batch as defined under § 80.2 but without the reference to transfer of custody from one facility to another facility.

(b) Except as provided in paragraph (c) of this section, the refiner or importer shall test each sample collected pursuant to paragraph (a) of this section to determine its sulfur content for compliance with the requirements of this subpart prior to the diesel fuel leaving the refinery or import facility, using an appropriate sampling and testing method as specified in § 80.580.

(c)(1) Any refiner who produces motor vehicle, NRLM diesel fuel, or ECA marine fuel using computer-controlled in-line blending equipment, including the use of an on-line analyzer test method that is approved under the provisions of § 80.580, and who, subsequent to the production of the diesel fuel batch tests a composited sample of the batch under the provisions of § 80.580 for purposes of designation and reporting, is exempt from the requirement of paragraph (b) of this section to obtain the test result required under this section prior to the diesel fuel leaving the refinery, provided that the refiner obtains approval from EPA. The requirement of this paragraph (c)(1) that the in-line blending equipment must include an on-line analyzer test method that is approved under the provisions of § 80.580 is effective beginning June 1, 2006.

(2) To obtain an exemption from paragraph (b) of this section, the refiner must submit to EPA all the information required under § 80.65(f)(4)(i)(A). A letter signed by the president, chief operating or chief executive officer of the company, or his/her designee, stating that the information contained in the submission is true to the best of his/her belief must accompany any submission under this paragraph (c)(2).

(3) Refiners who seek an exemption under paragraph (c)(2) of this section must comply with any request by EPA for additional information or any other requirements that EPA includes as part of the exemption.

(4) Within 60 days of EPA's receipt of a submission under paragraph (c)(2) of this section, EPA will notify the refiner if the exemption is not approved or of any deficiencies in the refiner's submission, or if any additional information is required or other requirements are included in the exemption pursuant to paragraph (c)(3) of this section. In the absence of such notification from EPA, the effective date of an exemption under this paragraph (c) is 60 days from EPA's receipt of the refiner's submission.

(5) EPA reserves the right to modify the requirements of an exemption under this paragraph (c), in whole or in part, at any time, if EPA determines that the refiner's operation does not effectively or adequately control, monitor or document the sulfur content of the refinery's diesel fuel production, or if EPA determines that any other circumstances exist which merit modification of the requirements of an exemption, such as advancements in the state of the art for in-line blending measurement which allow for additional control or more accurate monitoring or documentation of sulfur content. If EPA finds that a refiner provided false or inaccurate information in any submission required for an exemption under this section, upon notification from EPA, the refiner's exemption will be void *ab initio*.

(d) All test results under this section shall be retained for five years and must be provided to EPA upon request.

(e) Samples collected under this section must be retained for at least 30 days and provided to EPA upon request.

[69 FR 39184, June 29, 2004, as amended at 71 FR 25719, May 1, 2006; 75 FR 22971, Apr. 30, 2010]

§ 80.582 What are the sampling and testing methods for the fuel marker?

For heating oil and NRLM diesel fuel subject to the fuel marker requirement in § 80.510(d), (e), or (f), the identification of the presence and concentration of the fuel marker in diesel fuel may be determined using the test procedures qualified in accordance with the requirements in this section.

(a) *Sampling and testing for methods for the fuel marker*. The sampling, sample preparation, and testing methods qualified for use in accordance with the requirements of this section may involve the use of hazardous materials, operations and equipment. This section does not address the associated safety problems which may exist. It is the responsibility of the user of the procedures specified in this section to establish appropriate safety and health practices prior to their use. It is also the responsibility of the user to dispose of any byproducts which might result from conducting these procedures in a manner consistent with applicable safety and health requirements.

(b) *What are the precision and accuracy criteria for qualification of fuel marker test methods?*—(1) *Precision*. A standard deviation of less than 0.10 milligrams per liter is required, computed from the results of a minimum of 20 repeat tests made over 20 days on samples taken from a homogeneous commercially available diesel fuel which meets the applicable industry consensus and federal regulatory specifications and which contains the fuel marker at a concentration in the range of 0.10 to 8 milligrams per liter. In order to qualify, the 20 results must be a series of tests on the same material and there must be a sequential record of the analysis with no omissions. A laboratory facility may exclude a given sample or test result only if the exclusion is for a valid reason under good laboratory practices and it maintains records regarding the sample and test results and the reason for excluding them.

(2) *Accuracy*. (i) The arithmetic average of a continuous series of at least 10 tests performed on a commercially available marker solvent yellow 124 standard in the range of 0.10 to 1 milligrams per liter shall not differ from the ARV of that standard by more than 0.05 milligrams per liter.

(ii) The arithmetic average of a continuous series of at least 10 tests performed on a commercially available marker solvent yellow 124 standard in the range of 4 to 10 milligrams per liter shall not differ from the ARV of that standard by more than 0.05 milligrams per liter.

(iii) In applying the tests of paragraphs (b)(2)(i) and (ii) of this section, individual test results shall be compensated for any known chemical interferences.

(c) *What process must a test facility follow in order to qualify a test method for determining the fuel marker content of distillate fuels and how will EPA qualify or decline to qualify a test method?*—(1) *Qualification of test methods approved by voluntary consensus-based standards bodies*. Any standard test method developed by a Voluntary Consensus-Based Standards Body, such as the American Society for Testing and Materials (ASTM) or International Standards Organization (ISO), shall be considered a qualified test method for determining the fuel marker content of distillate fuel provided that it meets the precision and accuracy criteria under paragraph (b) of this section. The qualification of a test method is limited to the single test facility that performed the testing for accuracy and precision. The individual facility must submit the accuracy and precision results for each method, including information on the date and time of each test measurement used to demonstrate precision, following procedures established by the Administrator.

(2) *Qualification of test methods that have not been approved by a voluntary consensus-based standards body*. A test method that has not been approved by a voluntary consensus-based standards body may be qualified upon approval by the Administrator. The following information must be submitted in the application for approval by each test facility, for each test method that it wishes to have approved:

(i) Full test method documentation, including a description of the technology and/or instrumentation that makes the method functional.

(ii) Information demonstrating that the test method meets the accuracy and precision criteria under paragraph (b) of this section, including information on the date and time of each test measurement used to demonstrate precision.

(iii) Samples used for precision and accuracy determination must be retained for 90 days.

(iv) If requested by the Administrator, test results utilizing the method and performed on a sample of commercially available distillate fuel which meets the applicable industry consensus and federal regulatory specifications and which contains the fuel marker.

(v) Any additional information requested by the Administrator and necessary to render a decision as to qualification of the test method.

(vi) The qualification of a test method is limited to the single test facility that performed the testing for accuracy and precision and any other required testing.

(3)(i) Within 90 days of receipt of all materials required to be submitted under paragraph (c)(1) or (c)(2) of this section, the Administrator shall determine whether to qualify the test method under this section. The Administrator shall qualify the test method if all materials required under this section are received and the test method meets the accuracy and precision criteria of paragraph (b) of this section.

(ii) If the Administrator denies approval of the test method, within 90 days of receipt of all materials required to be submitted under this section, the Administrator will notify the applicant of the reasons for not approving the method. If the Administrator does not notify the applicant within 90 days of receipt of the application, that the test method is not approved, then the test method shall be deemed approved.

(iii) If the Administrator finds that an individual test facility has provided false or inaccurate information under this section, upon notice from the Administrator, the qualification shall be void *ab initio*.

(iv) The qualification of any test method under this paragraph (c) shall be valid for the duration of the period during which the fuel marker requirements remain applicable under this subpart.

(d) *Quality control procedures for fuel marker measurement instrumentation.* A test shall not be considered a test using a qualified test method unless the following quality control procedures are performed separately for each instrument used to make measurements:

(1) Follow all mandatory provisions of ASTM D 6299–02 and construct control charts from the mandatory quality control testing prescribed in paragraph 7.1 of the reference method, following guidelines under A 1.5.1 for individual observation charts and A 1.5.2 for moving range charts. The Director of the Federal Register approved the incorporation by reference of ASTM D 6299–02, Standard Practice for Applying Statistical Quality Assurance Techniques to Evaluate Analytical Measurement System Performance, as prescribed in 5 U.S.C. 552(a) and 1 CFR part 51. Anyone may purchase copies of this standard from the American Society for Testing and Materials, 100 Barr Harbor Dr., West Conshohocken, PA 19428. Anyone may inspect copies at the U.S. EPA, Air and Radiation Docket and Information Center, 1301 Constitution Ave., NW., Room B102, EPA West Building, Washington, DC 20460 or at the National Archives and Records Administration (NARA). For information on the availability of this material at NARA, call 202–741–6030, or go to: *http://www.archives.gov/federal_register/code_of_federal_regulations/ibr_locations.html*.

(2) Follow paragraph 7.3.1 of ASTM D 6299–02 to check standards using a reference material at least monthly or following any major change to the laboratory equipment or test procedure. Any deviation from the accepted reference value of a check standard greater than 0.10 milligrams per liter must be investigated.

(3) Samples of tested batches must be retained for 30 days or the period equal to the interval between quality control sample tests, whichever is longer.

(4) Upon discovery of any quality control testing violation of paragraph A 1.5.1.3 or A 1.5.2.1 of ASTM D 6299–02,

or any check standard deviation greater than 0.10 milligrams per liter, conduct an investigation into the cause of such violation or deviation and, after restoring method performance to statistical control, retest retained samples from batches originally tested since the last satisfactory quality control material or check standard testing occasion.

(5) Retain results of quality control testing and retesting of retained samples under paragraph (d)(3) of this section for five years.

[69 FR 39185, June 29, 2004]

§ 80.583 What alternative sampling and testing requirements apply to importers who transport motor vehicle diesel fuel, NRLM diesel fuel, or ECA marine fuel by truck or rail car?

Importers who import diesel fuel subject to the 15 ppm sulfur standard under § 80.510(b) or (c) or 80.520(a) into the United States by truck or by rail car may comply with the following requirements instead of the requirements to sample and test each batch of fuel designated as subject to the 15 ppm sulfur standard under § 80.581 otherwise applicable to importers:

(a) *Terminal testing.* For purposes of determining compliance with the 15 ppm sulfur standard, the importer may use test results for sulfur content testing conducted by the foreign truck-loading or rail car-loading terminal operator for diesel fuel contained in the storage tank from which trucks or rail cars used to transport diesel fuel designated as subject to the 15 ppm sulfur content standard into the United States are loaded, provided the following conditions are met:

(1) The sampling and testing shall be performed after each receipt of diesel fuel into the storage tank, or immediately before each transfer of diesel fuel to the importer's truck or rail car.

(2) The sampling and testing shall be performed according to § 80.580.

(3) At the time of each transfer of diesel fuel to the importer's truck or rail car for import to the U.S., the importer must obtain a copy of the terminal test result that indicates the sulfur content of the truck or rail car load, or truck or rail car compartment load, as applicable.

(b) *Quality assurance program.* The importer must conduct a quality assurance program, as specified in this paragraph (b), for each truck or rail car loading terminal.

(1) Quality assurance samples must be obtained from the truck-loading or rail car loading terminal and tested by the importer, or by an independent laboratory, and the terminal operator must not know in advance when samples are to be collected.

(2) The sampling and testing must be performed using the methods specified in § 80.580.

(3) The frequency of the quality assurance sampling and testing must be at least one sample for each 50 of an importer's trucks or rail cars that are loaded at a terminal, or one sample per month, whichever is more frequent.

(c) *Party required to conduct quality assurance testing.* The quality assurance program under paragraph (b) of this section shall be conducted by the importer. In the alternative, this testing may be conducted by an independent laboratory that meets the criteria under § 80.65(f)(2)(iii), provided the importer receives copies of all results of tests conducted no later than 21 days after the sample was taken.

(d) *Alternative batch designations.* For purposes of maintaining batch records under §§ 80.592, 80.600, and 80.602, designation of batches under § 80.598, and reporting under §§ 80.593, 80.601, and 80.604:

(1) In lieu of treating each portion of a tank truck compartment delivered to a different facility as a different batch, a truck importer may treat each compartment as a batch, if all the fuel in the compartment is delivered only to retail outlets, wholesale purchaser-consumers or other end users. Where different compartments contain homogeneous product of identical designations, the total volume of those compartments may be treated as a single batch, if the entire volume is delivered only to retail outlets, wholesale purchaser-consumers or other ultimate consumers.

(2) Each portion of a rail car (or rail cars) delivery of a different designation

or each delivery to a different facility is considered to be a separate batch.

(e) *EPA inspections of terminals.* EPA inspectors or auditors must be given full and immediate access to the truck or rail car-loading terminal and any laboratory at which samples of diesel fuel collected at the terminal are analyzed, and must be allowed to conduct inspections, review records, collect diesel fuel samples and perform audits. These inspections or audits may be either announced or unannounced.

(f) *Certified DFR-Diesel.* This section does not apply to Certified DFR-Diesel as defined in § 80.620.

(g) *Effect of noncompliance.* If any of the requirements of this section are not met, all motor vehicle diesel fuel and NRLM diesel fuel imported by the truck or rail car importer during the time the requirements are not met is deemed in violation of the 15 ppm sulfur diesel fuel standards in § 80.510(b) or (c) or § 80.520(a), as applicable. Additionally, if any requirement is not met, EPA may notify the importer of the violation, and, if the requirement is not fulfilled within 10 days of notification, the truck importer may not in the future use the sampling and testing provisions in this section in lieu of the provisions in § 80.581.

[69 FR 39186, June 29, 2004, as amended at 75 FR 22971, Apr. 30, 2010]

§ 80.584 What are the precision and accuracy criteria for approval of test methods for determining the sulfur content of motor vehicle diesel fuel, NRLM diesel fuel, and ECA marine fuel?

(a) *Precision.* (1) For motor vehicle diesel fuel and diesel fuel additives subject to the 15 ppm sulfur standard of § 80.520(a)(1) and NRLM diesel fuel and diesel fuel additives subject to the 15 ppm sulfur standard of § 80.510(b) and (c), a standard deviation less than 0.72 ppm, computed from the results of a minimum of 20 repeat tests made over 20 days on samples taken from a single homogeneous commercially available diesel fuel with a sulfur content in the range of 5–15 ppm. The 20 results must be a series of tests with a sequential record of the analyses and no omissions. A laboratory facility may exclude a given sample or test result only if the exclusion is for a valid reason under good laboratory practices and it maintains records regarding the sample and test results and the reason for excluding them.

(2) For motor vehicle diesel fuel subject to the 500 ppm sulfur standard of § 80.520(c), and for NRLM diesel fuel subject to the 500 ppm sulfur standard of § 80.510(a), of a standard deviation less than 9.68 ppm, computed from the results of a minimum of 20 repeat tests made over 20 days on samples taken from a single homogeneous commercially available diesel fuel with a sulfur content in the range of 200–500 ppm. The 20 results must be a series of tests with a sequential record of the analyses and no omissions. A laboratory facility may exclude a given sample or test result only if the exclusion is for a valid reason under good laboratory practices and it maintains records regarding the sample and test results and the reason for excluding them.

(3) For ECA marine fuel subject to the 1,000 ppm sulfur standard of § 80.510(k), of a standard deviation less than 18.07 ppm, computed from the results of a minimum of 20 repeat tests made over 20 days on samples taken from a single homogeneous commercially available diesel fuel with a sulfur content in the range of 700–1,000 ppm. The 20 results must be a series of tests with a sequential record of the analyses and no omissions. A laboratory facility may exclude a given sample or test result only if the exclusion is for a valid reason under good laboratory practices and it maintains records regarding the sample and test results and the reason for excluding them.

(b) *Accuracy.* (1) For motor vehicle diesel fuel and diesel fuel additives subject to the 15 ppm sulfur standard of § 80.520(a)(1) and NRLM diesel fuel and diesel fuel additives subject to the 15 ppm sulfur standard of § 80.510(b) and (c):

(i) The arithmetic average of a continuous series of at least 10 tests performed on a commercially available gravimetric sulfur standard in the range of 1–10 ppm sulfur shall not differ from the accepted reference value (ARV) of that standard by more than 0.54 ppm sulfur;

(ii) The arithmetic average of a continuous series of at least 10 tests performed on a commercially available gravimetric sulfur standard in the range of 10–20 ppm sulfur shall not differ from the ARV of that standard by more than 0.54 ppm sulfur; and

(iii) In applying the tests of paragraphs (b)(1)(i) and (ii) of this section, individual test results shall be compensated for any known chemical interferences.

(2) For motor vehicle diesel fuel subject to the 500 ppm sulfur standard of § 80.520(c), and for NRLM diesel fuel subject to the 500 ppm sulfur standard of § 80.510(a):

(i) The arithmetic average of a continuous series of at least 10 tests performed on a commercially available gravimetric sulfur standard in the range of 100–200 ppm sulfur shall not differ from the ARV of that standard by more than 7.26 ppm sulfur;

(ii) The arithmetic average of a continuous series of at least 10 tests performed on a commercially available gravimetric sulfur standard in the range of 400–500 ppm sulfur shall not differ from the ARV of that standard by more than 7.26 ppm sulfur; and

(iii) In applying the tests of paragraphs (b)(2)(i) and (ii) of this section, individual test results shall be compensated for any known chemical interferences.

(3) For ECA marine fuel subject to the 1,000 ppm sulfur standard of § 80.510(k):

(i) The arithmetic average of a continuous series of at least 10 tests performed on a commercially available gravimetric sulfur standard in the range of 300–400 ppm sulfur shall not differ from the ARV of that standard by more than 13.55 ppm sulfur;

(ii) The arithmetic average of a continuous series of at least 10 tests performed on a commercially available gravimetric sulfur standard in the range of 900–1,000 ppm sulfur shall not differ from the ARV of that standard by more than 13.55 ppm sulfur; and

(iii) In applying the tests of paragraphs (b)(3)(i) and (ii) of this section, individual test results shall be compensated for any known chemical interferences.

[69 FR 39187, June 29, 2004, as amended at 75 FR 22971, Apr. 30, 2010]

§ 80.585 What is the process for approval of a test method for determining the sulfur content of diesel or ECA marine fuel?

(a) *Approval of test methods approved by voluntary consensus-based standards bodies*. For such a method to be approved, the following information must be submitted to the Administrator by each test facility for each test method that it wishes to have approved: Any test method approved by a voluntary consensus-based standards body, such as the American Society for Testing and Materials (ASTM) or International Standards Organization (ISO), shall be approved as a test method for determining the sulfur content of diesel fuel if it meets the applicable accuracy and precision criteria under § 80.584. The approval of a test method is limited to the single test facility that performed the testing for accuracy and precision. The individual facility must submit the accuracy and precision results for each method, including information on the date and time of each test measurement used to demonstrate precision, following procedures established by the Administrator.

(b) *Approval of test methods not approved by a voluntary consensus-based standards body*. For such a method to be approved, the following information must be submitted to the Administrator by each test facility for each test method that it wishes to have approved:

(1) Full test method documentation, including a description of the technology and/or instrumentation that makes the method functional.

(2) Information demonstrating that the test method meets the applicable accuracy and precision criteria of § 80.584, including information on the date and time of each test measurement used to demonstrate precision.

(3) If requested by the Administrator, test results from use of the method to analyze samples of commercially available fuel provided by EPA.

(4) Any additional information requested by the Administrator and necessary to render a decision as to approval of the test method.

(c) *Sample retention.* Samples used for precision and accuracy determination must be retained for 90 days.

(d) *EPA approval.* (1) Within 90 days of receipt of all materials required to be submitted under paragraph (a) or (b) of this section, the Administrator shall determine whether the test method is approved under this section.

(2) If the Administrator denies approval of the test method, within 90 days of receipt of all materials required to be submitted under paragraph (a) or (b) of this section, the Administrator will notify the applicant of the reasons for not approving the method. If the Administrator does not notify the applicant within 90 days of receipt of the application, that the test method is not approved, then the test method shall be deemed approved.

(3) If the Administrator finds that an individual test facility has provided false or inaccurate information under this section, upon notice from the Administrator the approval shall be void *ab initio*.

(4) The approval of any test method under paragraph (b) of this section shall be valid for five years from the date of approval by the Administrator and shall not be extended. If the method is later approved by a voluntary consensus-based standards body, the approval shall remain valid as long as the conditions of paragraph (a) of this section are met.

(e) *Quality assurance procedures for sulfur measurement instrumentation.* A test shall not be considered a test using an approved test method unless the following quality control procedures are performed separately for each instrument used to make measurements:

(1) Follow all mandatory provisions of ASTM D 6299–02 and construct control charts from the mandatory quality control testing prescribed in paragraph 7.1 of the reference method, following guidelines under A 1.5.1 for individual observation charts and A 1.5.2 for moving range charts. The Director of the Federal Register approved the incorporation by reference of ASTM D 6299–02, Standard Practice for Applying Statistical Quality Assurance Techniques to Evaluate Analytical Measurement System Performance, as prescribed in 5 U.S.C. 552(a) and 1 CFR part 51. Anyone may purchase copies of this standard from the American Society for Testing and Materials, 100 Barr Harbor Dr., West Conshohocken, PA 19428. Anyone may inspect copies at the U.S. EPA, Air and Radiation Docket and Information Center, 1301 Constitution Ave., NW., Room B102, EPA West Building, Washington, DC 20460 or at the National Archives and Records Administration (NARA). For information on the availability of this material at NARA, call 202–741–6030, or go to: *http://www.archives.gov/federal_register/code_of_federal_regulations/ibr_locations.html.*

(2) Follow paragraph 7.3.1 of ASTM D 6299–02 to check standards using a reference material at least monthly or following any major change to the laboratory equipment or test procedure. Any deviation from the accepted reference value of a check standard greater than 1.44 ppm (for diesel fuel subject to the 15 ppm sulfur standard), 19.36 ppm (for diesel fuel subject to the 500 ppm sulfur standard), or 36.14 ppm (for ECA marine fuel subject to the 1,000 ppm sulfur standard must be investigated.

(3) Samples of tested batches must be retained for 30 days or the period equal to the interval between quality control sample tests, whichever is longer.

(4) Upon discovery of any quality control testing violation of paragraph A 1.5.1.3 or A 1.5.2.1 of ASTM D 6299–02, or any check standard deviation greater than 1.44 ppm (for diesel fuel subject to the 15 ppm sulfur standard), 19.36 ppm (for diesel fuel subject to the 500 ppm sulfur standard), or 36.14 ppm (for ECA marine fuel subject to the 1,000 ppm sulfur standard), conduct an investigation into the cause of such violation or deviation and, after restoring method performance to statistical control, retest retained samples from batches originally tested since the last satisfactory quality control material or check standard testing occasion.

[69 FR 39187, June 29, 2004, as amended at 75 FR 22972, Apr. 30, 2010]

§ 80.586 What are the record retention requirements for test methods approved under this subpart?

Each individual test facility must retain records related to the establishment of accuracy and precision values, all test method documentation, and any quality control testing and analysis under §§ 80.582, 80.584 and 80.585, for five years.

[69 FR 39188, June 29, 2004]

§§ 80.587–80.589 [Reserved]

RECORDKEEPING AND REPORTING REQUIREMENTS

§ 80.590 What are the product transfer document requirements for motor vehicle diesel fuel, NRLM diesel fuel, heating oil, ECA marine fuel, and other distillates?

(a) This paragraph (a) applies on each occasion that any person transfers custody or title to MVNRLM diesel fuel, heating oil, or ECA marine fuel (including distillates used or intended to be used as MVNRLM diesel fuel, heating oil, or ECA marine fuel) except when such fuel is dispensed into motor vehicles or nonroad equipment, locomotives, marine diesel engines or C3 vessels. Note that 40 CFR part 1043 specifies requirements for documenting fuel transfers to certain marine vessels. For all fuel transfers subject to this paragraph (a), the transferor must provide to the transferee documents which include the following information:

(1) The names and addresses of the transferor and transferee.

(2) The volume of diesel fuel or distillate which is being transferred.

(3) The location of the diesel fuel or distillate at the time of the transfer.

(4) The date of the transfer.

(5) For transfers of MVNRLM diesel fuel or ECA marine fuel (beginning June 1, 2014), the sulfur content standard the transferor represents the fuel to meet.

(6) Beginning June 1, 2006, when an entity, from a facility at any point in the distribution system, transfers custody of a distillate or residual fuel designated under § 80.598, the following information must also be included:

(i) The facility registration number of the transferor and transferee, for terminals and all parties upstream, under § 80.597, if any.

(ii) An accurate and clear statement of the applicable designation and/or classification under § 80.598(a) and (b), for example, ''500 ppm sulfur NRLM diesel fuel'', or ''jet fuel''; and whether the fuel is dyed or undyed, and for heating oil, whether marked or unmarked where applicable.

(7) For transfers of title or custody from one facility to another in the distribution system where diesel fuel or distillates are taxed, dyed or marked, and for any subsequent transfers (except when such fuel is dispensed into motor vehicles or nonroad, locomotive, or marine equipment), an accurate statement on the product transfer document of the applicable fuel uses and classifications, as follows (however, in instances where space is constrained, substantially similar language may be used following approval from EPA):

(i) *Undyed 15 ppm sulfur diesel fuel*. For the period from June 1, 2006 and beyond, ''15 ppm sulfur (maximum) Undyed Ultra-Low Sulfur Diesel Fuel. For use in all diesel vehicles and engines.'' From June 1, 2006 through May 31, 2010, the product transfer document must also state whether the diesel fuel is #1D or #2D, or NP diesel.

(ii) *Dyed 15 ppm sulfur diesel fuel*. From June 1, 2006 and beyond, ''15 ppm sulfur (maximum) Dyed Ultra-Low Sulfur Diesel Fuel. For use in all nonroad diesel engines. Not for use in highway vehicles or engines except for tax-exempt use in accordance with section 4082 of the Internal Revenue Code.''

(iii) *Undyed 500 ppm sulfur diesel fuel*. From June 1, 2006 through September 30, 2010, ''500 ppm sulfur (maximum) Undyed Low Sulfur Diesel Fuel. For use in Model Year 2006 and older diesel highway vehicles and engines. Also for use in nonroad, locomotive, and marine diesel engines. Not for use in model year 2007 and newer highway vehicles or engines.''

(iv) *Dyed 500 ppm sulfur diesel fuel*. (A) For the period of June 1, 2006 through September 30, 2010, ''500 ppm sulfur (maximum) Dyed Low Sulfur Nonroad, Locomotive or Marine Diesel Fuel. Not for use in highway vehicles or engines

except for use in Model Year 2006 and older highway diesel vehicles or engines for tax-exempt use in accordance with section 4082 of the Internal Revenue Code.''

(B) From June 1, 2010 through September 30, 2014, ''500 ppm sulfur (maximum) Dyed Low Sulfur Nonroad Diesel Fuel. For use in model year 2010 and older nonroad diesel engines. May be used in locomotive and marine diesel engines. Not for use in highway vehicles and engines or model year 2011 or later nonroad engines other than locomotive or marine diesel engines. Not for use in the Northeast/Mid-Atlantic Area.''

(C) For dyed locomotive and marine diesel fuel beginning June 1, 2010, ''500 ppm sulfur (maximum) Dyed Low Sulfur Locomotive and Marine diesel fuel. Not for use in highway or other nonroad vehicles and engines.''

(v) *Dyed High Sulfur NRLM Fuel.* From June 1, 2007 through September 30, 2010, ''High Sulfur Dyed Nonroad, Locomotive, or Marine Engine Diesel fuel—sulfur content may exceed 500 ppm sulfur. Not for use in highway vehicles or engines. Not for use in any nonroad engines requiring Ultra-Low Sulfur Diesel Fuel. Not for use in the Northeast/Mid-Atlantic Area.''

(vi) *Heating oil.* For heating oil produced or imported beginning June 1, 2007, ''Heating Oil. Not for use in highway vehicles or engines or nonroad, locomotive, or marine engines.''

(vii) *ECA marine fuel.* For ECA marine fuel produced or imported beginning June 1, 2014, ''1,000 ppm sulfur (maximum) ECA marine fuel. For use in Category 3 marine vessels only. Not for use in engines not installed on C3 marine vessels.''

(b) The following may be substituted for the descriptions in paragraph (a) of this section, as appropriate:

(1) ''This is high sulfur diesel fuel for use only in Guam, American Samoa, or the Northern Mariana Islands.'';

(2) ''This diesel fuel is for export use only.'';

(3) ''This diesel fuel is for research, development, or testing purposes only.''; or

(4) ''This diesel fuel is for use in diesel highway vehicles or nonroad equipment under an EPA-approved national security exemption only.''

(c) If undyed and/or unmarked distillate fuel is dyed and/or marked subsequent to the issuance of a product transfer document, at the time the distillate fuel is dyed and/or marked, a new product transfer document must be prepared with the language under paragraph (a)(7) of this section applicable to the changed fuel and provided to subsequent transferees.

(d) Except for transfers to truck carriers, retailers or wholesale purchaser-consumers, product codes may be used to convey the information required under this section if such codes are clearly understood by each transferee. ''15'', ''500'', or ''greater than 500'' or ''>500'' must appear clearly on the product transfer document, and may be contained in the product code. If the designation is included in the code: codes used to convey the statement in paragraphs (a)(7)(i) and (a)(7)(ii) of this section must contain the number ''15'', codes used to convey the statement in paragraphs (a)(7)(iii) and (a)(7)(iv) of this section must contain the number ''500''; codes used to convey the statement in paragraph (a)(7)(v) of this section must contain the statement ''greater than 500'' or ''>500''. If another letter, number, or symbol is being used to convey any of the statements in paragraphs (a)(7)(i), (a)(7)(ii), (a)(7)(iii), (a)(7)(iv), and/or (a)(7)(v) of this section, it must be clearly defined and denoted on the product transfer document.

(e) Beginning June 1, 2014, for ECA marine fuel only (except for transfers to truck carriers, retailers or wholesale purchaser-consumers), product codes may be used to convey the information required under this section if such codes are clearly understood by each transferee. ''1000'' must appear clearly on the product transfer document, and may be contained in the product code. If the designation is included in the code, codes used to convey the statement in paragraph (a)(7)(vii) of this section must contain the number ''1000''. If another letter, number, or symbol is being used to convey the statement in paragraph (a)(7)(vii) of this section, it must be clearly defined

and denoted on the product transfer document.

(f) From June 1, 2001 through May 31, 2005, any transfer subject to this section, which is also subject to the early credit provisions of § 80.531(b), must comply with all applicable requirements of this section.

(g) From June 1, 2005 through May 31, 2006, any transfer subject to this section, which is also subject to the early credit requirements of § 80.531(c), must comply with all applicable requirements of this section.

(h) *Mobile refuelers*. The provisions of this section shall also apply to a mobile refueler that dispenses fuel from tanker trucks or other vessels into motor vehicles, nonroad diesel engines or nonroad diesel engine equipment. Each visit by the mobile refueler to a location shall be considered a separate occasion for purposes of paragraph (a) of this section. The tank trucks used by mobile refuelers are not subject to the labeling requirements in §§ 80.570 through 80.574.

(i) Identifications of fuel designations can be limited to a sub-designation that accurately identifies the fuel and do not need to also include the broader designation. For example, NR diesel fuel does not also need to be designated as NRLM or MVNRLM diesel fuel.

(j) *Pipeline ticketing*. For the case where a pipeline delivers a batch of ULSD to another facility that contains slight amounts of another type of fuel from a preceding or following batch, a clear statement must be included on the PTD denoting this. When this occurs, the receiving facility must handle the fuel appropriately (*e.g.*, redesignate or downgrade any amount of fuel in that batch that does not meet the applicable sulfur standard), in accordance with the provisions of §§ 80.527 and 80.599.

[69 FR 39188, June 29, 2004, as amended at 70 FR 40896, July 15, 2005; 70 FR 70510, Nov. 22, 2005, as amended at 71 FR 25719, May 1, 2006; 75 FR 22972, Apr. 30, 2010]

§ 80.591 What are the product transfer document requirements for additives to be used in diesel fuel?

(a) Except as provided in paragraphs (b) and (d) of this section, on each occasion that any person transfers custody or title to a diesel fuel additive that is subject to the provisions of § 80.521 to a party in the additive distribution system or in the diesel fuel distribution system for use downstream of the diesel fuel refiner, the transferor must provide to the transferee documents which identify the additive, and—

(1) Identify the name and address of the transferor and transferee; the date of transfer; the location at which the transfer took place; the volume of additive transferred; and

(2) Indicate compliance with the 15 ppm sulfur standard by inclusion of the following statement: ''The sulfur content of this diesel fuel additive does not exceed 15 ppm.''

(b) On each occasion that any person transfers custody or title to a diesel fuel additive subject to the requirements of § 80.521(b), to a party in the additive distribution system or in the diesel fuel distribution system for use in diesel fuel downstream of the diesel fuel refiner, the transferor must provide to the transferee documents which identify the additive, and do each of the following:

(1) Identify the name and address of the transferor and transferee; the date of transfer; the location at which the transfer took place; the volume of additive transferred.

(2) Indicate the high sulfur potential of the additive by inclusion of the following statement:

This diesel fuel additive may exceed the federal 15 ppm sulfur standard. Improper use of this additive may result in non-complying diesel fuel.

(3) If the additive package contains a static dissipater additive and/or red dye having a sulfur content greater than 15 ppm, a statement must be included which accurately describes the contents of the additive package pursuant to one of the following choices:

(i) ''This diesel fuel additive contains a static dissipater additive having a sulfur content greater than 15 ppm.''

(ii) ''This diesel fuel additive contains red dye having a sulfur content greater than 15 ppm.''

(iii) ''This diesel fuel additive contains a static dissipater additive and red dye having a sulfur content greater than 15 ppm.''

(4) Include the following information:

(i) The additive package's maximum sulfur concentration.

(ii) The maximum recommended concentration in volume percent for use of the additive package in diesel fuel.

(iii) The contribution to the sulfur level of the fuel, in ppm, that would result if the additive package is used at the maximum recommended concentration.

(c) Except for transfers of diesel fuel additives to truck carriers, retailers or wholesale purchaser-consumers, product codes may be used to convey the information required under paragraphs (a) and (b) of this section, if such codes are clearly understood by each transferee. Codes used to convey the statement in paragraph (a)(2) of this section must contain the number ''15'' and codes used to convey the statement in paragraph (b)(2) of this section must not contain such number.

(d) For those diesel fuel additives which are sold in containers for use by the ultimate consumer of diesel fuel, each transferor must have displayed on the additive container, in a legible and conspicuous manner, either of the following statements, as applicable:

(1) ''This diesel fuel additive complies with the federal low sulfur content requirements for use in diesel motor vehicles and nonroad engines.''; or

(2) For those additives sold in containers for use by the ultimate consumer, with a sulfur content in excess of 15 ppm the following statement: ''This diesel fuel additive does not comply with federal ultra-low sulfur content requirements for use in model year 2007 and newer diesel motor vehicles or model year 2011 and newer diesel nonroad equipment engines.''

[69 FR 39189, June 29, 2004, as amended at 70 FR 40896, July 15, 2005; 71 FR 25719, May 1, 2006]

§ 80.592 What records must be kept by entities in the motor vehicle diesel fuel and diesel fuel additive distribution systems?

(a) *Records that must be kept by entities in the motor vehicle diesel fuel and diesel fuel additive distribution systems.* Beginning June 1, 2006, or for a refiner or importer, the first compliance period in which the refiner or importer is generating early credits under § 80.531(b) or (c), whichever is earlier, any person who produces, imports, sells, offers for sale, dispenses, distributes, supplies, offers for supply, stores, or transports motor vehicle diesel fuel subject to the provisions of this subpart, must keep all the following records:

(1) The applicable product transfer documents required under §§ 80.590 and 80.591.

(2) For any sampling and testing for sulfur content for a batch of motor vehicle diesel fuel produced or imported and subject to the 15 ppm sulfur standard or any sampling and testing for sulfur content as part of a quality assurance testing program, and any sampling and testing for cetane index, aromatics content, solvent yellow 124 content or dye solvent red 164 content of motor vehicle diesel fuel or motor vehicle diesel fuel additives:

(i) The location, date, time and storage tank or truck identification for each sample collected;

(ii) The name and title of the person who collected the sample and the person who performed the testing; and

(iii) The results of the tests for sulfur content (including, where applicable, the test results with and without application of the adjustment factor under § 80.580(d)) and for cetane index or aromatics content (as applicable), and the volume of product in the storage tank or container from which the sample was taken.

(3) The actions the party has taken, if any, to stop the sale or distribution of any motor vehicle diesel fuel found not to be in compliance with the sulfur standards specified in this subpart, and the actions the party has taken, if any, to identify the cause of any noncompliance and prevent future instances of noncompliance.

(b) *Additional records to be kept by refiners and importers of motor vehicle diesel fuel subject to hardship standards, small refiner standards and early credit provisions.* Beginning June 1, 2006, or for a refiner or importer, the first compliance period in which the refiner or importer is generating early credits under § 80.531(b) or (c), any refiner producing motor vehicle diesel fuel subject to the sulfur standard under § 80.520(a)(1), for each of its refineries,

and any importer importing such motor vehicle diesel fuel, shall keep records that include the following information for each batch of motor vehicle diesel fuel produced or imported:

(1) The batch volume.

(2) The batch number, assigned under the batch numbering procedures under § 80.65(d)(3).

(3) The date of production or import.

(4) A record designating the batch as motor vehicle diesel fuel meeting the 500 ppm sulfur standard or as motor vehicle diesel fuel meeting the 15 ppm sulfur standard.

(5) For foreign refiners, the designations and other records required to be kept under § 80.620.

(6) In the case of importers, the designations and other records required under § 80.620(o).

(7) Information regarding credits, kept separately for each calendar year compliance period, kept separately for each refinery and in the case of importers, kept separately for imports into each CTA, and designated as motor vehicle diesel fuel credits and kept separately from NRLM credits, as follows:

(i) The number of credits in the refiner's or importer's possession at the beginning of the calendar year;

(ii) The number of credits generated;

(iii) The number of credits used;

(iv) If any were obtained from or transferred to other parties, for each such other party, its name, its EPA refiner or importer registration number consistent with § 80.593(d), in the case of credits generated by an importer the port and CTA of import of the diesel fuel that generated the credits, and the number obtained from, or transferred to, the other party;

(v) The number in the refiner's or importer's possession that will carry over into the subsequent calendar year compliance period; and

(vi) Commercial documents that establish each transfer of credits from the transferor to the transferee.

(8) The calculations used to determine compliance with the volume requirements of this subpart.

(9) The calculations used to determine the number of credits generated.

(10) A copy of reports submitted to EPA under § 80.593.

(c) *Additional records importers must keep.* Any importer shall keep records that identify and verify the source of each batch of certified diesel fuel program foreign refiner DFR-Diesel and non-certified DFR-Diesel imported and demonstrate compliance with the requirements under § 80.620.

(d) *Length of time records must be kept.* The records required in this section shall be kept for five years from the date they were created, except that records relating to credit transfers shall be kept by the transferor for 5 years from the date the credits were transferred, and shall be kept by the transferee for 5 years from the date the credits were transferred, used or terminated, whichever is later.

(e) *Make records available to EPA.* On request by EPA, the records required in this section must be made available to the Administrator or the Administrator's representative. For records that are electronically generated or maintained, the equipment and software necessary to read the records shall be made available, or if requested by EPA, electronic records shall be converted to paper documents which shall be provided to the Administrator's authorized representative.

(f) *Additional records to be kept by aggregated facilities consisting of a refinery and a truck loading terminal.* In addition to the records required by paragraph (a) of this section, such aggregated facilities must also keep the following records beginning June 1, 2006:

(1) The following information for each batch of motor vehicle diesel fuel produced by the refinery and sent over the aggregated facility's truck rack:

(i) The batch volume;

(ii) The batch number, assigned under the batch numbering procedures under §§ 80.65(d)(3) and 80.502(d)(1);

(iii) The date of receipt or import;

(iv) A record designating the batch as motor vehicle diesel fuel meeting the 500 ppm sulfur standard or as motor vehicle diesel fuel meeting the 15 ppm sulfur standard; and,

(v) A record indicating the volumes that were either taxed, dyed, or dyed and marked.

(2) Volume reports for all motor vehicle diesel fuel from external sources (*i.e.*, from another refiner or importer),

as described in § 80.601(f)(2), sent over the aggregated facility's truck rack.

[66 FR 5136, Jan. 18, 2001, as amended at 69 FR 39189, June 29, 2004; 70 FR 70510, Nov. 22, 2005; 71 FR 25719, May 1, 2006]

§ 80.593 What are the reporting requirements for refiners and importers of motor vehicle diesel fuel subject to temporary refiner relief standards?

Beginning with 2006, or the first compliance period during which credits are generated under § 80.531(b) or (c), whichever is earlier, any refiner or importer who produces or imports motor vehicle diesel fuel subject to the 500 ppm sulfur standard under § 80.520(c), or any refiner or importer who generates, uses, obtains, or transfers credits under §§ 80.530 through 80.532, and continuing for each year thereafter, must submit to EPA annual reports that contain the information required in this section, and such other information as EPA may require:

(a) *Refiners and importers.* Refiners and importers must report the following information separately for each refinery or CTA, in the case of importers, subject to a phase-in sulfur standard, small refiner standard or temporary refiner relief sulfur standard, or who generates, uses or transfers credits under §§ 80.530 through 80.532:

(1) The refiner's name and the EPA refinery registration number.

(2) For all motor vehicle diesel fuel produced for use in the United States during the compliance period:

(i) The total volume of motor vehicle diesel fuel produced;

(ii) The volume, in gallons, that complied with a sulfur content standard of 500 ppm; and

(iii) The volume, in gallons, that complied with the 15 ppm sulfur content standard.

(3) The percentage of the volume of motor vehicle diesel fuel produced during the compliance period that met the 15 ppm sulfur standard and the percentage that met the 500 ppm sulfur standard prior to the application of any volume credits.

(4) The percentage of volume of motor vehicle diesel fuel produced meeting the 15 ppm sulfur standard after the inclusion of any credits.

(5) Information regarding credits, separately for each refinery and for credits or debits related to imported motor diesel fuel, separately by importer and separately by CTA of import as follows:

(i) The CTA of the refiner's refinery or the importer's or the foreign refiner's CTA and port of importation;

(ii) The number of credits at the beginning of the compliance period;

(iii) The number of credits generated;

(iv) The number of credits used;

(v) If any credits were obtained from or transferred to other refineries or import ports, for each other refinery or importer, its name, address (or Port) and CTA, EPA refinery or importer registration number, and the number of credits obtained from or transferred to the other refinery or importer (by import CTA);

(vi) The number of credits, if any, that will carry over to the subsequent compliance period; and

(vii) The number of credits in deficit that must be made up for the following year;

(6) The reporting requirements under § 80.620, if applicable.

(7) For each batch of motor vehicle diesel fuel produced or imported during the compliance period:

(i) The batch number assigned using the batch numbering conventions under § 80.65(d)(3) and the appropriate designation under § 80.598.

(ii) The date the batch was produced; and

(iii) The volume of the batch, in gallons.

(8) When submitting reports under this paragraph (a), any importer shall exclude certified DFR-Diesel.

(b) *Additional reporting requirements for importers.* Importers of motor vehicle diesel fuel subject to the 500 ppm sulfur standard must report the following information:

(1) The importer's name and EPA registration number.

(2) For each foreign refinery from which motor vehicle diesel fuel is imported that is subject to a sulfur standard under § 80.520(c), the importer must report, for each batch of diesel fuel imported, the information required to be reported under § 80.620(o).

(c) *Report submission.* Any annual report required by this section shall be:

(1) Signed and certified as meeting all the applicable requirements of this subpart by the owner or a responsible corporate officer of the refiner or importer; and

(2) Submitted to EPA no later than August 31 for the prior annual compliance period.

[66 FR 5136, Jan. 18, 2001, as amended at 69 FR 39190, June 29, 2004; 70 FR 70510, Nov. 22, 2005; 75 FR 22972, Apr. 30, 2010]

§ 80.594 What are the pre-compliance reporting requirements for motor vehicle diesel fuel?

(a) Except as provided in paragraph (d) of this section, beginning on June 1, 2003, and on June 1, 2004 and June 1, 2005, all refiners and importers planning to produce or import motor vehicle diesel fuel subject to the provisions of this subpart, shall submit the following information to EPA:

(1) Any changes to the information submitted for the company registration;

(2) Any changes to the information submitted for any refinery or import facility registration;

(3) An estimate of the average daily volumes (in gallons) of each sulfur grade of motor vehicle diesel fuel produced (or imported) at each refinery (or import facility). These volume estimates must be provided both for fuel produced from crude oil, as well as any fuel produced from other sources, and must be provided for the periods of June 1, 2006 through December 31, 2006, January 1, 2007 through December 31, 2007, January 1, 2008 through December 31, 2008, January 1, 2009 through December 31, 2009, and January 1, 2010 through May 31, 2010, for each refinery and import facility;

(4) If expecting to participate in the temporary compliance options provisions and the credit trading program, estimates of the number of credits to be generated and/or used each year the program is applicable;

(5) Information on project schedule by quarter of known or projected completion date by the stage of the project, for example, following the five project phases described in EPA's June 2002 Highway Diesel Progress Review report (EPA420–R–02–016, *http://www.epa.gov/otaq/regs/hd2007/420r02016.pdf*): Strategic planning, Planning and front-end engineering, Detailed engineering and permitting, Procurement and construction, and Commissioning and startup;

(6) Basic information regarding the selected technology pathway for compliance (*e.g.*, conventional hydrotreating vs. other technologies, revamp vs. grassroots, etc.);

(7) Whether capital commitments have been made or are projected to be made; and

(8) The pre-compliance reports due 2004 and 2005 must provide an update of the progress in each of these areas.

(b) Beginning on June 1, 2003, all approved motor vehicle diesel fuel small refiners shall submit the following additional information to EPA, as applicable:

(1) In the case of a refinery with an approved application under § 80.552(a):

(i) A showing that sufficient sources of 15 ppm motor vehicle diesel fuel will likely be available in its marketing area after June 1, 2006 and through 2010;

(ii) If after 2003 the sources of 15 ppm motor vehicle diesel fuel decrease, the pre-compliance reports for 2004 and/or 2005 must identify this change and must include a supplementary showing that the sources of 15 ppm motor vehicle diesel fuel are still sufficient.

(2) In the case of a refinery with an approved application under § 80.552(c), a demonstration that by June 1, 2006, 95 percent of its motor vehicle diesel fuel will be at 15 ppm sulfur at a volume meeting the requirements of § 80.553(e).

(c) For each refiner and importer approved under § 80.540, a demonstration that by June 1, 2006, 95 percent of its motor vehicle diesel fuel will be at 15 ppm sulfur at a volume of meeting the requirements of § 80.540(e).

(d) By July 1, 2006, each refiner and importer of motor vehicle diesel fuel shall submit a report to EPA stating that the production or importation of 15 ppm sulfur motor vehicle diesel fuel commenced by June 1, 2006.

(e) The pre-compliance reporting requirements of this section do not apply

to refineries subject to the provisions of § 80.513.

[66 FR 5136, Jan. 18, 2001, as amended at 69 FR 39190, June 29, 2004; 70 FR 40896, July 15, 2005]

§ 80.595 How does a small or GPA refiner apply for a motor vehicle diesel fuel volume baseline for the purpose of extending their gasoline sulfur standards?

(a) Any small refiner applying for an extension of the duration of its small refiner gasoline sulfur standards of § 80.240, under §§ 80.552(c) and 80.553, any small refiner applying to produce MVDF under § 80.552(a), or any refiner applying for an extension of the duration of the GPA standards under § 80.540 must apply for a motor vehicle diesel fuel volume baseline by December 31, 2001. A separate volume baseline must be sought for each refinery for which application of the provisions of § 80.553 or § 80.540 is sought.

(b) The volume baseline must be sent via certified mail with return receipt or express mail with return receipt to: U.S. EPA-Attn: Diesel Baseline, 1200 Pennsylvania Avenue, NW. (6406J), Washington, DC 20460 (certified mail/return receipt) or Attn: Diesel Baseline, Transportation and Regional Programs Division, 501 3rd Street, NW. (6406J), Washington, DC 20001 (express mail/return receipt).

(c) The motor vehicle diesel fuel volume baseline application must include the following information:

(1) A listing of the names and addresses of all refineries owned by the refiner for which the refiner is applying for a motor vehicle diesel fuel volume baseline.

(2) The average annual volume (in gallons) of motor vehicle diesel fuel produced for U.S. use in 1998 and 1999, for each refinery for which the refiner is applying for such baseline, calculated in accordance with § 80.596. The refiner shall follow the procedures, applicable to volume baselines and using motor vehicle diesel fuel instead of gasoline, specified in §§ 80.91 through 80.93 to establish the volume of motor vehicle diesel fuel that was produced for U.S. use in 1998 and 1999 for purposes of establishing a volume baseline under this section.

(3) A letter signed by the president, chief operating, or chief executive officer of the company, or his/her delegate, stating that the information contained in the volume baseline determination is true to the best of his/her knowledge.

(4) Name, address, phone number, facsimile number, and e-mail address (if availabale) of a corporate contact person.

(5) The following information for each batch of motor vehicle diesel fuel produced for U.S. use in 1998 and 1999:

(i) Batch number assigned to the batch under procedures such as those in § 80.65(d) or § 80.101(i), or, if unavailable, such other identifying information as is available; and

(ii) Volume of the batch, in gallons.

(6) For a refinery that was not in operation during part or all of the period 1998 and 1999, the information required under this paragraph (c) for the motor vehicle diesel fuel produced for U.S. use during the most recent calendar year that the refinery was in operation after the refinery was reactivated.

(d) Within 120 days of receipt of an application under this section, EPA will notify the refiner of an approval of the refinery's baseline, or of any deficiencies in the application.

(e) If at any time the baseline submitted in accordance with the requirements of this section is determined to be incorrect, EPA will notify the refiner of the corrected baseline. The corrected baseline shall apply to all applicable compliance calculations under this subpart.

(f)(1) If insufficient information is available for the Administrator to establish a baseline under the provisions of paragraph (c) of this section and § 80.596(a), the refiner shall submit additional information sufficient for the Administrator to establish a baseline.

(2) To satisfy the requirements of paragraph (f)(1) of this section, the Administrator may require, and consider, any information pertinent to establish a baseline, including:

(i) Motor vehicle diesel fuel production volumes for other years;

(ii) Crude capacity of the refinery;

(iii) The ratio, or the typical ratio, for other similarly sized or configured

refineries, between motor vehicle diesel fuel production and gasoline production.

[66 FR 5136, Jan. 18, 2001, as amended at 70 FR 40896, July 15, 2005]

§ 80.596 How is a refinery motor vehicle diesel fuel volume baseline calculated?

(a) For purposes of this subpart, a refinery's motor vehicle diesel fuel volume baseline is calculated using the following equation:

$$V_{Base} = \frac{\sum_{i=1}^{n}(V_i)}{m/12}$$

Where:

V_{base} = Volume baseline value, in gallons.

V_i = Volume of motor vehicle diesel fuel batch i, in gallons.

n = Total number of batches of motor vehicle diesel fuel produced for U.S. use during January 1, 1998 through December 31, 1999 (or the total number of batches of motor vehicle diesel fuel produced during the most recent calendar year the refinery was in operation after being reactivated pursuant to § 80.595(c)(6)); or, for a foreign refinery, the total number of batches of motor vehicle diesel fuel produced and imported into the U.S. during January 1, 1998 through December 31, 1999 (or the total number of batches of motor vehicle diesel fuel produced and imported into the U.S. during the most recent calendar year the refinery was in operation after being reactivated pursuant to § 80.595(c)(6)).

i = Individual batch of motor vehicle diesel fuel produced during January 1, 1998 through December 31, 1999 (or individual batch of motor vehicle diesel fuel produced during the most recent calendar year the refinery was in operation after being reactivated pursuant to § 80.595(c)(6)); or, for a foreign refinery, individual batch of motor vehicle diesel fuel produced and imported into the U.S. during January 1, 1998 through December 31, 1999 (or individual batch of motor vehicle diesel fuel produced and imported into the U.S. during the most recent calendar year the refinery was in operation after being reactivated pursuant to § 80.595(c)(6)).

m = Number of months in the baseline period (24 except in the case of a startup or reactivation).

(b) If insufficient information is available for the Administrator to establish a baseline under paragraph (a) of this section, the baseline may be determined under the provisions of § 80.595(f).

[66 FR 5136, Jan. 18, 2001, as amended at 70 FR 40896, July 15, 2005]

§ 80.597 What are the registration requirements?

The following registration requirements apply under this subpart:

(a) *Registration for motor vehicle diesel fuel.* Refiners having any refinery that is subject to a sulfur standard under § 80.520(a), and importers importing such diesel fuel, must provide EPA the information under § 80.76, if such information has not been provided under the provisions of this part. In addition, for each import facility, the same identifying information as required for each refinery under § 80.76(c) must be provided.

(b) *Registration for NRLM diesel.* Refiners and importers that intend to produce or supply NRLM diesel fuel by June 1, 2007, must provide EPA the information under § 80.76 no later than December 31, 2005, if such information has not been provided under the provisions of this part. In addition, for each import facility, the same identifying information as required for each refinery under § 80.76(c) must be provided.

(c) *Registration for ECA marine fuel.* Refiners and importers that intend to produce or supply ECA marine fuel beginning June 1, 2014, must provide EPA the information under § 80.76 no later than December 31, 2012, if such information has not been previously provided under the provisions of this part. In addition, for each import facility, the same identifying information as required for each refinery under § 80.76(c) must be provided.

(d) *Entity registration.* (1) Except as prescribed in paragraph (d)(6) of this section, each entity as defined in § 80.502 that intends to deliver or receive custody of any of the following fuels from June 1, 2006 through May 31, 2010, must register with EPA by December 31, 2005, or six months prior to commencement of producing, importing, or distributing any distillate listed in paragraphs (d)(1)(i) through (d)(1)(iii) of this section:

(i) Fuel designated as 500 ppm sulfur MVNRLM diesel fuel under § 80.598 on

which taxes have not been assessed pursuant to IRS code (26 CFR part 48).

(ii) Fuel designated as 15 ppm sulfur MVNRLM diesel fuel under § 80.598 on which taxes have not been assessed pursuant to IRS code (26 CFR part 48).

(iii) Fuel designated as NRLM diesel fuel under § 80.598 that is undyed pursuant to § 80.520.

(iv) Fuel designated as California Diesel fuel under § 80.598 on which taxes have not been assessed and red dye has not been added (if required) pursuant to IRS code (26 CFR part 48) and that is delivered by pipeline to a terminal outside of the State of California pursuant to the provisions of § 80.617(b).

(2) Except as prescribed in paragraph (d)(6) of this section, each entity as defined in § 80.502 that intends to deliver or receive custody of any of the following fuels from June 1, 2007, through May 31, 2014, must register with EPA by December 31, 2005, or six months prior to commencement of producing, importing, or distributing any distillate listed in paragraph (d)(1) of this section:

(i) Fuel designated as 500 ppm sulfur MVNRLM diesel fuel under § 80.598 on which taxes have not been assessed pursuant to IRS code (26 CFR part 48).

(ii) Fuel designated as NRLM diesel fuel under § 80.598 that is undyed pursuant to § 80.520.

(iii) Fuel designated as heating oil under § 80.598 that is unmarked pursuant to § 80.510(d) through (f).

(iv) Fuel designated as LM diesel fuel under § 80.598(a)(2)(iii) that is unmarked pursuant to § 80.510(e).

(3) Except as prescribed in paragraph (d)(6) of this section, each entity as defined in § 80.502 that intends to deliver or receive custody of any of the following fuels beginning June 1, 2014, must register with EPA by December 31, 2012, or prior to commencement of producing, importing, or distributing any distillate or residual fuel listed in this paragraph (d):

(i) Fuel designated as 1,000 ppm sulfur ECA marine fuel under § 80.598.

(ii) [Reserved]

(4) Registration shall be on forms prescribed by the Administrator, and shall include the name, business address, contact name, telephone number, e-mail address, and type of production, importation, or distribution activity or activities engaged in by the entity.

(5) Registration shall include the information required under paragraph (e) of this section for each facility owned or operated by the entity that delivers or receives custody of a fuel described in paragraphs (d)(1) through (3) of this section.

(6) *Exceptions for Excluded Liquids*. An entity that would otherwise be required to register pursuant to the requirements of paragraphs (d)(1) through (3) of this section is exempted from the registration requirements under this section provided that:

(i) The only diesel fuel or heating oil that the entity delivers or receives on which taxes have not been assessed or which is not received dyed pursuant to IRS code 26 CFR part 48 is an excluded liquid as defined pursuant to IRS code 26 CFR 48.4081–1(b).

(ii) The entity does not transfer the excluded liquid to a facility which delivers or receives diesel fuel other than an excluded liquid on which taxes have not been assessed pursuant to IRS code (26 CFR part 48).

(e) *Facility registration*. (1) List for each separate facility of an entity required to register under paragraph (d) of this section, the facility name, physical location, contact name, telephone number, e-mail address and type of facility. For facilities that are aggregated under § 80.502, provide information regarding the nature and location of each of the components. If aggregation is changed for any subsequent compliance period, the entity must provide notice to EPA prior to the beginning of such compliance period.

(2) If facility records are kept off-site, list the off-site storage facility name, physical location, contact name, and telephone number.

(3) *Mobile facilities:* (i) A description shall be provided in the registration detailing the types of mobile vessels that will likely be included and the nature of the operations.

(ii) Entities may combine all mobile operations into one facility; or may split the operations by vessel, region, route, waterway, *etc.* and register separate mobile facilities for each.

(iii) The specific vessels need not be identified in the registration, however information regarding specific vessel contracts shall be maintained by each registered entity for its mobile facilities, pursuant to § 80.602(d).

(f) *Changes to registration information.* Any company or entity shall submit updated registration information to the Administrator within 30 days of any occasion when the registration information previously supplied for an entity, or any of its registered facilities, becomes incomplete or inaccurate.

(g) *Issuance of registration numbers.* EPA will supply a registration number to each entity and a facility registration number to each of an entity's facilities that is identified, which shall be used in all reports to the Administrator.

[69 FR 39190, June 29, 2004, as amended at 70 FR 70510, Nov. 22, 2005; 71 FR 25720, May 1, 2006; 75 FR 22972, Apr. 30, 2010]

§ 80.598 What are the designation requirements for refiners, importers, and distributors?

(a) *Designation requirements for refiners and importers.* (1) Any refiner or importer shall accurately and clearly designate all fuel it produces or imports for use in diesel motor vehicles as either motor vehicle diesel fuel meeting the 15 ppm sulfur standard under § 80.520(a)(1) or as motor vehicle diesel fuel meeting the 500 ppm sulfur standard under § 80.520(c).

(2) Subject to the restrictions in paragraph (a)(3) of this section, beginning June 1, 2006, any refiner or importer shall accurately and clearly designate each batch of diesel fuel or distillate fuel for which they transfer custody to another entity, according to the following categories, including specifying its volume:

(i) Designate the fuel as one of the following fuel types:

(A) Motor vehicle, nonroad, locomotive or marine (MVNRLM) diesel fuel.

(B) Heating oil.

(C) Jet fuel.

(D) Kerosene.

(E) No. 4 fuel.

(F) Distillate fuel for export only.

(G) Exempt distillate fuels such as fuels that are covered by a national security exemption under § 80.606, fuels that are used for purposes of research and development pursuant to § 80.607, and fuels used in the U.S. Territories pursuant to § 80.608 (including additional identifying information).

(H) ECA marine fuel. This designation may be used beginning June 1, 2014, and fuel designated as such is subject to the restrictions in paragraph (a)(3)(xv) of this section.

(ii) From June 1, 2006 through May 31, 2014 any batch designated as MVNRLM diesel fuel must also be designated as one of the following:

(A) Motor vehicle diesel fuel; or

(B) NRLM diesel fuel.

(iii) From June 1, 2010 through May 31, 2012 any batch designated as NRLM must also be designated as one of the following:

(A) NR diesel fuel; or

(B) LM diesel fuel.

(iv) Until June 1, 2014, any batch designated as MVNRLM diesel fuel must also be designated according to one of the following three sulfur level specifications:

(A) 15 ppm if its sulfur content is less than or equal to 15 ppm.

(B) 500 ppm if its sulfur content is less than or equal to 500 ppm.

(C) High Sulfur if its sulfur content is greater than 500 ppm.

(v) From June 1, 2006, through May 31, 2010, any batch designated as motor vehicle diesel fuel must also be designated according to one of the following distillation classifications that most accurately represents the fuel:

(A) #1D.

(B) #2D.

(C) NP diesel (NP).

(3) The following restrictions and clarifications apply:

(i) Prior to June 1, 2006, any batch of MVNRLM not containing visible evidence of red dye under § 80.520(b) must be designated as motor vehicle diesel fuel.

(ii) Any distillate fuel containing visible evidence of dye may not be designated as motor vehicle diesel fuel unless it is further designated as tax exempt motor vehicle diesel fuel.

(iii) Any distillate containing the marker required pursuant to the provisions of § 80.510(d) through (f) must be designated as heating oil, except that from June 1, 2010 through May 31, 2012 it may also be designated as LM diesel fuel, pursuant to § 80.510(e).

(iv) Prior to June 1, 2009 all 15 ppm sulfur MVNRLM diesel fuel must be designated as motor vehicle diesel fuel. A refiner that has been approved as a NRLM diesel fuel small refiner under § 80.551(g) and has elected to use the compliance option specified under § 80.554(d) may also designate 15 ppm sulfur MVNRLM fuel as NRLM diesel fuel beginning June 1, 2006.

(v) Beginning June 1, 2010 any distillate fuel having a sulfur content greater than 15 ppm may not be designated as motor vehicle diesel fuel.

(vi) Beginning June 1, 2014, any distillate fuel having a sulfur content greater than 15 ppm may not be designated as MVNRLM diesel fuel.

(vii) Any batch of #1D fuel which is suitable for use as MVNRLM and which is also suitable for use as kerosene or jet fuel (*i.e.*, commonly referred to as dual use kerosene) may be designated as MVNRLM, kerosene, or jet fuel (as applicable).

(viii) Beginning June 1, 2007, any distillate fuel with a sulfur content greater than 500 ppm distributed or intended for distribution in the area specified in § 80.510(g)(1), may not be designated as MVNRLM diesel fuel.

(ix) From June 1, 2010 through May 31, 2012, any distillate fuel with a sulfur content greater than 15 ppm distributed or intended for distribution in the area specified in § 80.510(g)(1), may not be designated as NR diesel fuel.

(x) From June 1, 2012 through May 31, 2014, any distillate fuel with a sulfur content greater than 15 ppm distributed or intended for distribution in the area specified in § 80.510(g)(1), may not be designated as NRLM diesel fuel.

(xi) Beginning June 1, 2007, any distillate fuel with a sulfur content greater than 500 ppm distributed or intended for distribution in the area specified in § 80.510(g)(2) may not be designated as NRLM diesel fuel unless EPA has first approved a compliance plan for the refiner for segregating the fuel from all other types of NRLM diesel fuel from the refinery gate to the ultimate consumer, as specified under § 80.554(a)(4).

(xii) From June 1, 2010 through May 31, 2012, any distillate fuel with a sulfur content greater than 15 ppm distributed or intended for distribution in the area specified in § 80.510(g)(2) may not be designated as NR diesel fuel unless EPA has first approved a compliance plan for the refiner for segregating the fuel from all other types of NRLM diesel fuel from the refinery gate to the ultimate consumer, as specified under § 80.554(b)(4).

(xiii) From June 1, 2012 through May 31, 2014, any distillate fuel with a sulfur content greater than 15 ppm distributed or intended for distribution in the area specified in § 80.510(g)(2) may not be designated as NRLM diesel fuel unless, EPA has first approved a compliance plan for the refiner for segregating the fuel from all other types of NRLM diesel fuel from the refinery gate to the ultimate consumer, as specified under § 80.554(b)(4).

(xiv) Beginning June 1, 2014, any distillate fuel with a sulfur content greater than 15 ppm may not be designated as MVNRLM diesel fuel.

(xv) Beginning June 1, 2014, any fuel designated as ECA marine fuel will be subject to all the following restrictions:

(A) Such fuel may not exceed a sulfur level of 1,000 ppm.

(B) Such fuel may only be produced, distributed, sold, and purchased for use in C3 marine vessels.

(b) *Designation requirements for fuel distributors.* (1) Pursuant to the provisions of paragraphs (b)(2) through (b)(9) of this section, beginning June 1, 2006, any distributor shall accurately and clearly designate each batch of diesel fuel or distillate fuel for which they transfer custody to another facility, including specifying its volume, as specified in this paragraph (b). Distributors must also accurately and clearly classify such diesel fuel and distillate fuel by sulfur content, while it is in their custody between receipt and delivery.

(2) From June 1, 2006 through May 31, 2009, whenever custody of a batch of 15 ppm sulfur motor vehicle diesel fuel is transferred to another facility, the entity transferring custody must accurately and clearly designate the batch

as one of the following and specify its volume:

(i) #1D 15 ppm sulfur motor vehicle diesel fuel.

(ii) #2D 15 ppm sulfur motor vehicle diesel fuel.

(iii) Fuel that meets the requirements specified in § 80.616 which is transferred by a pipeline facility to a terminal facility outside of the State of California pursuant to § 80.617(b) may be designated as California diesel fuel. Such fuel must subsequently be redesignated by the receiving terminal as either #1D or #2D 15 ppm motor vehicle diesel fuel, or segregated for delivery by tank truck to a retail or wholesale purchaser consumer facility inside the State of California pursuant to § 80.617(b)(2).

(iv) NP 15 ppm sulfur motor vehicle diesel fuel.

(3) From June 1, 2009 through May 31, 2010, whenever custody of a batch of 15 ppm sulfur MVNRLM diesel fuel is transferred to another facility, the entity transferring custody must accurately and clearly designate the batch as one of the following and specify its volume:

(i) #1D 15 ppm sulfur motor vehicle diesel fuel.

(ii) #2D 15 ppm sulfur motor vehicle diesel fuel.

(iii) 15 ppm sulfur NRLM diesel fuel.

(iv) Fuel that meets the requirements specified in § 80.616 that is transferred by a pipeline facility to a terminal facility outside of the State of California pursuant to § 80.617(b) may be designated as California diesel fuel. Such fuel must either be redesignated by the receiving terminal as either #1D or #2D 15 ppm motor vehicle diesel fuel as prescribed in paragraph (b)(9)(xvi) of this section, or segregated for delivery by tank truck to a retail or wholesale purchaser consumer facility inside the State of California pursuant to § 80.617(b)(2).

(v) NP 15 ppm sulfur motor vehicle diesel fuel.

(4) From June 1, 2006 through May 31, 2010, whenever custody of a batch of undyed, 500 ppm sulfur MVNRLM is transferred to another facility, the entity transferring custody must accurately and clearly designate the batch as one of the following and specify its volume:

(i) #1D 500 ppm sulfur motor vehicle diesel fuel.

(ii) #2D 500 ppm sulfur motor vehicle diesel fuel.

(iii) 500 ppm sulfur NRLM diesel fuel.

(iv) NP 500 ppm sulfur motor vehicle diesel fuel.

(5) From June 1, 2007 through May 31, 2010, whenever custody of a batch of distillate fuel (other than jet fuel, kerosene, No. 4 fuel, or fuel for export) having a sulfur content greater than 500 ppm is transferred to another facility, the entity transferring custody must accurately and clearly designate the batch as one of the following and specify its volume:

(i) High sulfur NRLM diesel fuel (HSNRLM);

(ii) Heating oil; or

(iii) Exempt distillate fuels such as fuels that are covered by a national security exemption under § 80.606, fuels that are used for purposes of research and development pursuant to § 80.607, and fuels used in the U.S. Territories pursuant to § 80.608 (including additional identifying information).

(6) From June 1, 2010 through May 31, 2012, whenever custody of a batch of distillate fuel (other than jet fuel, kerosene, No. 4 fuel, or fuel for export) having a sulfur content greater than 15 ppm is transferred to another facility, the entity transferring custody must accurately and clearly designate the batch as one of the following and specify its volume:

(i) 500 ppm sulfur NR diesel fuel;

(ii) 500 ppm sulfur LM diesel fuel;

(iii) Heating oil; or

(iv) Exempt distillate fuels such as fuels that are covered by a national security exemption under § 80.606, fuels that are used for purposes of research and development pursuant to § 80.607, and fuels used in the U.S. Territories pursuant to § 80.608 (including additional identifying information).

(7) From June 1, 2012 through May 31, 2014, whenever custody of a batch of distillate fuel (other than jet fuel, kerosene, No. 4 fuel, or fuel for export) having a sulfur content greater than 15 ppm is transferred to another facility, the entity transferring custody must accurately and clearly designate the

batch as one of the following and specify its volume:

(i) 500 ppm sulfur NRLM diesel fuel.

(ii) Heating oil.

(iii) Exempt distillate fuels such as fuels that are covered by a national security exemption under § 80.606, fuels that are used for purposes of research and development pursuant to § 80.607, and fuels used in the U.S. Territories pursuant to § 80.608 (including additional identifying information).

(8) Beginning June 1, 2014, whenever custody of a batch of distillate or residual fuel (other than jet fuel, kerosene, No. 4 fuel, fuel for export, fuel intended for use outside an ECA, or fuel otherwise allowed to be used under 40 CFR part 1043) having a sulfur content greater than 15 ppm is transferred to another facility, the entity transferring custody must accurately and clearly designate the batch as one of the following and specify its volume:

(i) ECA marine fuel.

(ii) Heating oil.

(iii) Exempt distillate fuels such as fuels that are covered by a national security exemption under § 80.606, fuels that are used for purposes of research and development pursuant to § 80.607, and fuels used in the U.S. Territories pursuant to § 80.608 (including additional identifying information).

(9) The following restrictions and clarifications apply. Subject to the provisions of this paragraph (b)(9) and subject to the dye and marker provisions of § 80.520(b) and § 80.510(d) through (f), when custody of a batch of distillate fuel is transferred, the designation provided by the entity transferring custody pursuant to paragraphs (b)(1) through (b)(8) of this section may be different from the designation of the fuel when that same entity received custody.

(i) Any 500 ppm sulfur diesel fuel designated under this paragraph (b) and containing visible evidence of red dye may not be designated as motor vehicle diesel fuel.

(ii) Until June 1, 2014, any distillate fuel containing greater than or equal to 0.10 milligrams per liter of marker solvent yellow 124 required under § 80.510(d), (e), or (f) must be designated as heating oil except that from June 1, 2010, through September 30, 2012, it may also be designated as LM diesel fuel as specified under § 80.510(e).

(iii) Any batch of #1D fuel which is suitable for use as MVNRLM diesel fuel and which is also suitable for use as kerosene or jet fuel (*i.e.*, commonly referred to as dual use kerosene) may be designated as either MVNRLM diesel fuel, kerosene, or jet fuel (as applicable).

(iv) Any MVNRLM diesel fuel with a sulfur content of 500 ppm or less in inventory as of June 1, 2007 may be designated as motor vehicle diesel fuel.

(v) Batches or portions of batches of fuel received designated as 15 ppm sulfur #2D motor vehicle diesel fuel may be re-designated as 500 ppm sulfur motor vehicle diesel fuel, but only in accordance with the limitations of § 80.527(c).

(vi) Batches or portions of batches received designated as 500 ppm sulfur NRLM diesel fuel may be re-designated as 500 ppm sulfur motor vehicle diesel fuel by a truck loading terminal only if the terminal maintains a neutral or positive balance at the end of each quarterly compliance period on their motor vehicle diesel fuel volume from June 1, 2006 as calculated in § 80.599(b)(4).

(vii) Batches or portions of batches received designated as 500 ppm sulfur NRLM diesel fuel may be re-designated as 500 ppm sulfur motor vehicle diesel fuel by a facility other than a truck loading terminal only if the following restrictions are met:

(A) At the end of each annual compliance period, the facility has a neutral or positive balance on its motor vehicle diesel fuel volume from June 1, 2007 as calculated in § 80.599(b)(4); and

(B) At the end of each annual compliance period, the facility's balance for motor vehicle diesel fuel volume, from the beginning of the compliance period must be less than two percent of the total volume of motor vehicle diesel fuel received during the compliance period, as calculated in § 80.599(b)(5).

(viii) For facilities in areas other than those specified in § 80.510(g)(1) and (2), batches or portions of batches of unmarked distillate received designated as heating oil may be re-designated as NRLM or LM diesel fuel

only if all the following restrictions are met:

(A) From June 1, 2007, through May 31, 2010, for any compliance period, the volume of high sulfur NRLM diesel fuel delivered from a facility cannot be greater than the volume received, unless the volume of heating oil delivered from the facility is also greater than the volume it received by an equal or greater proportion, as calculated in § 80.599(c)(2).

(B) From June 1, 2010, through May 31, 2014, for any compliance period, the volume of fuel designated as heating oil delivered from a facility cannot be less than the volume of fuel designated as heating oil received, as calculated in § 80.599(c)(4).

(ix) For facilities in areas other than those specified in § 80.510(g)(1) and (g)(2), from June 1, 2010 through May 31, 2012, batches or portions of batches received designated as 500 ppm LM diesel fuel may be redesignated as 500 ppm NR diesel fuel only if for any compliance period the following restrictions are met:

(A) The volume of fuel designated as 500 ppm sulfur NR diesel fuel delivered from the facility cannot be greater than the volume received as calculated in § 80.599(d)(2)(i); or

(B) The volume of fuel designated as 500 ppm sulfur NR diesel fuel delivered from the facility in relation to the volume received is not a greater proportion than the volume of fuel designated as 500 ppm sulfur LM diesel fuel delivered from the facility in relation to the volume received, as calculated in § 80.599(d)(2)(ii).

(x) Notwithstanding the provisions of paragraphs (b)(5) and (8) of this section, beginning October 1, 2007:

(A) No distillate fuel with a sulfur content greater than 500 ppm distributed or intended for distribution in the areas specified in § 80.510(g)(1) and (g)(2), may be designated as NRLM diesel fuel, including LM diesel fuel except as provided in paragraph (b)(9)(xiii) of this section; and

(B) Distillate fuel with a sulfur content greater than 500 ppm distributed from within the areas specified in § 80.510(g)(1) and (g)(2) to areas outside these areas is subject to the provisions of paragraph (b)(5) of this section.

(xi) Notwithstanding the provisions of paragraphs (b)(6) through (b)(8) of this section, beginning October 1, 2010—

(A) No distillate fuel with a sulfur content greater than 15 ppm distributed or intended for distribution in the areas specified in § 80.510(g)(1) and (g)(2), may be designated as NR diesel fuel, except as provided in paragraph (b)(9)(xiv) of this section; and

(B) Distillate fuel with a sulfur content greater than 15 ppm distributed from within the areas specified in § 80.510(g)(1) and (g)(2) to areas outside these areas is subject to the provisions of paragraphs (b)(6) through (b)(7) of this section.

(xii) Notwithstanding the provisions of paragraphs (b)(7) and (8) of this section, beginning October 1, 2012—

(A) No distillate fuel with a sulfur content greater than 15 ppm distributed or intended for distribution in the areas specified in § 80.510(g)(1) and (g)(2), may be designated as NRLM diesel fuel, including LM diesel fuel, except as provided in paragraph (b)(9)(xv) of this section; and

(B) Distillate fuel with a sulfur content greater than 15 ppm distributed from within the areas specified in § 80.510(g)(1) and (g)(2) to areas outside these areas is subject to the provisions of paragraphs (b)(7) and (8) of this section.

(xiii) From June 1, 2007 through September 30, 2010, in the area specified in § 80.510(g)(2) only segregated batches of distillate fuel received designated as HSNRLM diesel fuel may be distributed designated as HSNRLM diesel fuel and must remain segregated from fuel with any other designations unless otherwise approved by EPA in a refiner compliance plan under § 80.554(a)(4).

(xiv) From June 1, 2010 through September 30, 2012, in the area specified in § 80.510(g)(2) only segregated batches of distillate fuel received designated as 500 ppm sulfur NR diesel fuel may be distributed designated as 500 ppm sulfur NR diesel fuel and must remain segregated from fuel with any other designations and from any other 500 ppm sulfur NRLM diesel fuel from any other sources, except as approved by EPA in a refiner compliance plan under § 80.554(a)(4).

(xv) From June 1, 2012 through September 30, 2014, in the area specified in § 80.510(g)(2) only segregated batches of distillate fuel received designated as 500 ppm sulfur NRLM diesel fuel may be distributed designated as 500 ppm sulfur NRLM diesel fuel and must remain segregated from fuel with any other designations and from any other 500 ppm sulfur NRLM diesel fuel from any other sources, except as approved by EPA in a refiner compliance plan under § 80.554(a)(4).

(xvi) Fuel designated as California diesel fuel under paragraph (b)(3)(iv) of this section that is received by a terminal facility pursuant to the provisions of § 80.617(b)(1) must be redesignated as either #1D or #2D 15 ppm motor vehicle diesel fuel as prescribed in paragraph (b)(9)(xvi) of this section, or segregated for delivery by tank truck to a retail or wholesale purchaser consumer facility inside the State of California pursuant to § 80.617(b)(2).

(c) Notwithstanding the provisions of paragraph (b) of this section, an entity is not required to designate heating oil that is delivered from a facility that only receives heating oil which is marked pursuant to § 80.510(d) through (f).

(d) Notwithstanding the provisions of paragraph (b)(4) of this section, an entity is not required to designate 500 ppm sulfur MVNRLM diesel fuel that is delivered from a facility that only receives 500 ppm sulfur MVNRLM diesel fuel on which taxes have been paid or into which red dye has been added pursuant to § 80.520(b).

(e) Notwithstanding the provisions of paragraph (b)(6) of this section, an entity is not required to designate 500 ppm sulfur LM diesel fuel that is delivered from a facility that only receives 500 ppm sulfur LM diesel fuel which is marked pursuant to § 80.510(e).

(f) Any entity that is both a distributor and a refiner or importer must comply with the provisions of paragraph (a) of this section for all distillate fuel produced or imported, and the provisions of paragraph (b) of this section for all distillate fuel for which it acted as distributor but not refiner or importer.

(g) No refiner, importer, or distributor may use the designation provisions of this section to circumvent the standards or requirements of § 80.510, 80.511, or 80.520.

[69 FR 39191, June 29, 2004, as amended at 70 FR 70511, Nov. 22, 2005; 71 FR 25720, May 1, 2006; 75 FR 22973, Apr. 30, 2010]

§ 80.599 How do I calculate volume balances for designation purposes?

(a) Quarterly compliance periods. The quarterly compliance periods are shown in the following table:

Beginning date of quarterly compliance period	Ending date of quarterly compliance period
June 1, 2006	September 30, 2006.
October 1, 2006	December 31, 2006.
January 1, 2007	March 31, 2007.
April 1, 2007	May 31, 2007.
June 1, 2007	September 30, 2007.
October 1, 2007	December 31, 2007.
January 1, 2008	March 31, 2008.
April 1, 2008	June 30, 2008.
July 1, 2008	September 30, 2008.
October 1, 2008	December 31, 2008.
January 1, 2009	March 31, 2009.
April 1, 2009	June 30, 2009.
July 1, 2009	September 30, 2009.
October 1, 2009	December 31, 2009.
January 1, 2010	March 31, 2010.
April 1, 2010	May 31, 2010.
June 1, 2010	September 30, 2010.

(1) The annual compliance periods are shown in the following table:

Beginning date of annual compliance period	Ending date of annual compliance period
June 1, 2006	May 31, 2007.
June 1, 2007	June 30, 2008.
July 1, 2008	June 30, 2009.
July 1, 2009	May 31, 2010.
June 1, 2010	June 30, 2011.
July 1, 2011	May 31, 2012.
June 1, 2012	June 30, 2013.
July 1, 2013	May 31, 2014.

(2) [Reserved]

(b) *Volume balance for motor vehicle diesel fuel.* (1) A facility's motor vehicle diesel fuel volume balance is calculated as follows:

$$MVB = MV_I - MV_O - MV_{INVCHG}$$

Where:

MVB = the volume balance for motor vehicle diesel fuel for the compliance period.

MV_I = the total volume of all batches of fuel designated as motor vehicle diesel fuel received for the compliance period. Any motor vehicle diesel fuel produced by or imported into the facility shall also be included in this volume.

MV_O = the total volume of all batches of fuel designated as motor vehicle diesel fuel delivered for the compliance period.

MV_{INVCHG} = the total volume of 15 ppm sulfur and 500 ppm sulfur motor vehicle diesel fuel in inventory at the end of the compliance period minus the total volume of 15 ppm sulfur and 500 ppm sulfur motor vehicle diesel fuel in inventory at the beginning of the compliance period, including accounting for any corrections in inventory due to volume swell or shrinkage, difference in measurement calibration between receiving and delivering meters, and similar matters, where corrections that increase inventory are defined as positive.

(2) Calculate the motor vehicle diesel fuel received, as follows:

$$MV_I = MV15_I + MV500_I$$

Where:

$MV15_I$ = the total volume of all the batches of fuel designated as 15 ppm sulfur motor vehicle diesel fuel received for the compliance period. Any motor vehicle diesel fuel produced by or imported into the facility shall also be included in this volume. Any untaxed and undyed California diesel fuel received by a terminal pursuant to § 80.617 (b)(1) shall be included in this volume.

$MV500_I$ = the total volume of all batches of fuel designated as 500 ppm sulfur motor vehicle diesel fuel received for the compliance period. Any motor vehicle diesel fuel produced by or imported into the facility shall also be included in this volume.

(3) Calculate the motor vehicle diesel fuel delivered, as follows:

$$MV_O = MV15_O + MV500_O$$

Where:

$MV15_O$ = the total volume of all batches of fuel designated as 15 ppm sulfur motor vehicle diesel fuel and delivered during the compliance period.

$MV500_O$ = the total volume of all batches of fuel designated as 500 ppm sulfur motor vehicle diesel fuel and delivered during the compliance period.

(4) The neutral or positive volume balance required for purposes of compliance with § 80.598(b)(9)(vi) and (b)(9)(vii)(A) means that the net balance of motor vehicle diesel fuel in inventory as of the end of the last day of the compliance period ($MVNB_E$) must be greater than or equal to zero. MVNBE is defined by the following equation:

$$MVNB_E = MV15_{BINV} + MV500_{BINV} + \Sigma MVB$$

Where:

$MV15_{BINV}$ = the total volume of fuel designated as 15 ppm sulfur motor vehicle diesel fuel in inventory at the beginning of the program on June 1, 2006.

$MV500_{BINV}$ = the total volume of fuel designated as 500 ppm sulfur motor vehicle diesel fuel in inventory at the beginning of the program on June 1, 2006. Any #2D 500 ppm sulfur MVNRLM in inventory at the beginning of the program on June 1, 2006 may be designated as motor vehicle diesel fuel.

ΣMVB = the sum of the balances for motor vehicle diesel fuel for the current compliance period and previous compliance periods.

(5) The volume balance required for purposes of compliance with § 80.598(b)(9)(vii)(B) means:

$$-MVB \leq 0.02 \times MV_I$$

(6) Calculations in paragraphs (b)(4) and (b)(5) of this section may be combined for all facilities wholly owned by an entity.

(7) For purposes of calculations in paragraphs (b)(1) through (b)(5) of this section, for batches of fuel received from facilities without an EPA facility ID#, any batches of fuel received on which taxes have been paid pursuant to IRS code (26 CFR part 48) shall be deemed to be $MV15_I$ or $MV500_I$ as appropriate for purposes of this paragraph.

(c) *Volume balance for high sulfur NRLM diesel fuel and heating oil.* (1) A facility's high sulfur NRLM balance is calculated as follows:

$$HSNRLMB = HSNRLMI_I - HSNRLM_O - HSNRLM_{INVCHG}$$

Where:

HSNRLMB = the balance for high sulfur NRLM diesel fuel for the compliance period.

$HSNRLM_I$ = the total volume of all batches of fuel designated as high sulfur NRLM received diesel fuel for the compliance period. Any high sulfur NRLM produced by or imported into the facility shall also be included in this volume.

$HSNRLM_O$ = the total volume of all batches of fuel designated as high sulfur NRLM diesel fuel delivered for the compliance period.

$HSNRLM_{INVCHG}$ = the volume of high sulfur NRLM diesel fuel in inventory at the end of the compliance period minus the volume of high sulfur NRLM diesel fuel in inventory at the beginning of the compliance period, including accounting for any corrections in inventory due to volume swell or

shrinkage, difference in measurement calibration between receiving and delivering meters, and similar matters, where corrections that increase inventory are defined as positive.

(2) The volume balance required for purposes of compliance with § 80.598(b)(9)(viii)(A) means one of the following:

(i) $HSNRLMB \geq 0$

(ii) $(HSNRLM_O + HSNRLM_{INVCHG}) / HSNRLM_I \leq (HO_O + HO_{INVCHG}) / HO_I$

(3) A facility's heating oil volume balance is calculated as follows:

$$HOB = HO_I - HO_O - HO_{INVCHG}$$

Where:

HOB = the balance for heating oil for the compliance period.

HO_I = the total volume of all batches of fuel designated as heating oil received for the compliance period. Any heating oil produced by or imported into the facility shall also be included in this volume.

HO_O = the total volume of all batches of fuel designated as heating oil delivered to all downstream entities for the compliance period.

HO_{INVCHG} = the volume of heating oil in inventory at the end of the compliance period minus the volume of heating oil in inventory at the beginning of the compliance period, including accounting for any corrections in inventory due to volume swell or shrinkage, difference in measurement calibration between receiving and delivering meters, and similar matters, where corrections that increase inventory are defined as positive.

(4) The volume balance required for purposes of compliance with § 80.598(b)(9)(viii)(B) means:

$HOB \leq 0$

(5) Calculations in paragraphs (c)(3) and (c)(4) of this section may be combined for all facilities wholly owned by an entity.

(6) For purposes of calculations in paragraphs (c)(1) through (c)(4) of this section, for batches of fuel received from facilities without an EPA facility ID#, any batches of fuel received marked pursuant to § 80.510(d) or (f) shall be deemed to be HO_I, any batches of fuel received marked pursuant to § 80.510(e) shall be deemed to be HO_I or $LM500_I$, any diesel fuel with less than or equal to 500 ppm sulfur that is dyed pursuant to § 80.520(b) and not marked pursuant to § 80.510(d) or (f) shall be deemed to be NRLM diesel fuel, and any diesel fuel with less than or equal to 500 ppm sulfur which is dyed pursuant to § 80.520(b) and not marked pursuant to § 80.510(e) shall be deemed to be NR diesel fuel.

(d) *Volume balance for NR diesel fuel.* (1) A facility's 500 ppm nonroad diesel fuel balance is calculated as follows:

$$NR500B = NR500_I - NR500_O - NR500_{INVCHG}$$

Where:

NR500B = the balance for 500 ppm sulfur NR diesel fuel for the compliance period.

$NR500_I$ = the total volume of all batches of fuel designated as 500 ppm sulfur NR diesel fuel received for the compliance period. Any 500 ppm sulfur NR diesel fuel produced by or imported into the facility shall also be included in this volume.

$NR500_O$ = the total volume of all batches of fuel designated as 500 ppm sulfur NR diesel fuel delivered for the compliance period.

$NR500_{INVCHG}$ = the volume of 500 ppm sulfur NR diesel fuel in inventory at the end of the compliance period minus the volume of 500 ppm sulfur NR diesel fuel in inventory at the beginning of the compliance period, and accounting for any corrections in inventory due to volume swell or shrinkage, difference in measurement calibration between receiving and delivering meters, and similar matters, where corrections that increase inventory are defined as positive.

(2) The volume balance required for purposes of compliance with § 80.598(b)(9)(ix) means one of the following:

(i) $NR500B \geq 0$

(ii) $(NR500_O + NR500_{INVCHG}) / NR500_I \leq (LM500_O + LM500_{INVCHG}) / LM500_I$.

Where:

$LM500_I$ = the total volume of all batches of fuel designated as 500 ppm sulfur LM diesel fuel received for the compliance period. Any 500 ppm sulfur LM diesel fuel produced by or imported into the facility shall also be included in this volume.

$LM500_O$ = the total volume of all batches of fuel designated as 500 ppm sulfur LM diesel fuel delivered for the compliance period.

$LM500_{INVCHG}$ = the volume of 500 ppm sulfur LM diesel fuel in inventory at the end of the compliance period minus the volume of 500 ppm sulfur LM diesel fuel in inventory at the beginning of the compliance period, and accounting for any corrections in inventory due to volume swell or shrinkage, difference in measurement calibration between receiving and delivering meters, and

similar matters, where corrections that increase inventory are defined as positive.

(e) *Anti-downgrading for motor vehicle diesel fuel.* (1) A facility must satisfy the provisions in either paragraphs (e)(2), (e)(3), (e)(4), or (e)(5) of this section to comply with the anti-downgrading limitation of paragraph § 80.527(c)(1), for the annual compliance periods defined in § 80.527(c)(3).

(2) The volume of #2D 15 ppm sulfur motor vehicle delivered must meet the following requirement:

$$(\#2MV15_O + \#2MV15_{INVCHG}) \geq 0.8 * \#2MV15_I$$

Where:

$\#2MV15_O$ = the total volume of fuel delivered during the compliance period that is designated as #2D 15 ppm sulfur motor vehicle diesel fuel.

$\#2MV15_{INVCHG}$ = the total volume of diesel fuel designated as #2D 15 ppm sulfur motor vehicle diesel fuel in inventory at the end of the compliance period minus the total volume of #2D 15 ppm sulfur motor vehicle diesel fuel in inventory at the beginning of the compliance period, and accounting for any corrections in inventory due to volume swell or shrinkage, difference in measurement calibration between receiving and delivering meters, and similar matters, where corrections that increase inventory are defined as positive.

$\#2MV15_I$ = the total volume of fuel received during the compliance period that is designated as #2D 15 ppm sulfur motor vehicle diesel fuel. Any untaxed and undyed California diesel fuel received by a terminal pursuant to § 80.617(b)(1) shall be included in this volume.

(3) The volume of #2D 500 ppm sulfur motor vehicle diesel fuel delivered must meet the following requirement:

$$\#2MV500_O \leq \#2MV500_I - \#2MV500_{INVCHG} + 0.2 * \#2MV15_I$$

Where:

$\#2MV500_O$ = the total volume of fuel delivered during the compliance period that is designated as #2D 500 ppm sulfur motor vehicle diesel fuel.

$\#2MV500_I$ = the total volume of fuel received during the compliance period that is designated as #2D 500 ppm sulfur motor vehicle diesel fuel.

$\#2MV500_{INVCHG}$ = the total volume of diesel fuel designated as #2D 500 ppm sulfur motor vehicle diesel fuel in inventory at the end of the compliance period minus the total volume of #2D 500 ppm sulfur motor vehicle diesel fuel in inventory at the beginning of the compliance period, and accounting for any corrections in inventory due to volume swell or shrinkage, difference in measurement calibration between receiving and delivering meters, and similar matters, where corrections that increase inventory are defined as positive.

(4) The following calculation may be used to account for wintertime blending of kerosene and the blending of non-petroleum diesel:

$$\#2MV500_O \leq \#2MV500_I + \#2MV500_P - \#2MV500_{INVCHG} + 0.2 * (\#1MV15_I + \#2MV15_I + NPMV15_I)$$

Where:

$\#1MV15_I$ = the total volume of fuel received during the compliance period that is designated as #1D 15 ppm sulfur motor vehicle diesel fuel. Any motor vehicle diesel fuel produced by or imported into the facility shall not be included in this volume.

$NPMV15_I$ = the total volume of fuel received during the compliance period that is designated as NP15 ppm sulfur motor vehicle diesel fuel. Any motor vehicle diesel fuel produced by or imported into the facility shall not be included in this volume.

$\#1MV15_P$ = the total volume of fuel produced by or imported into the facility during the compliance period that was designated as #1D 15 ppm sulfur motor vehicle diesel fuel when it was delivered.

(5) The following calculation may be used to account for wintertime blending of kerosene, the blending of non-petroleum diesel, and/or changes in the facility's volume balance of motor vehicle diesel fuel resulting from a temporary shift of 500 ppm sulfur NRLM diesel fuel to 500 ppm sulfur motor vehicle diesel fuel during the compliance period:

$$\#2MV500_O < \#2MV500_I + \#2MV500_P - \#2MV500_{INVCHG} + 0.2 * \#2MV15_I + \#1MV15_B + \#2NRLM500_S + NP_B$$

Where:

$\#1MV15_B$ = the total volume of fuel received during the compliance period that is designated as #1D 15 ppm sulfur motor vehicle diesel fuel and that the facility can demonstrate they blended into #2D 500 ppm sulfur motor vehicle diesel fuel. Any motor vehicle diesel fuel produced by or imported into the facility shall not be included in this volume.

$\#2MV500_P$ = the total volume of fuel produced by or imported into the facility during the compliance period that was designated as #2MV 500 ppm sulfur motor vehicle diesel fuel when it was delivered.

$\#2NRLM500_S$ = the total volume of #2D 500 ppm sulfur NRLM diesel fuel that the facility can demonstrate they redesignated as #2D 500 ppm sulfur motor vehicle diesel fuel during the compliance period.

NP_B = the total volume of fuel received during the compliance period that is designated as NP15 ppm sulfur motor vehicle diesel fuel, and/or NP500 ppm sulfur motor vehicle diesel fuel which the facility can demonstrate they blended into #2D 500 ppm sulfur motor vehicle diesel fuel.

(f) *Inventory adjustments.* Adjustments to inventory under this section must be based on normal business practices for the industry, appropriate physical plant operations and use of good engineering judgments.

(g) *Unique circumstances.* EPA may, at its discretion, grant a fuel distributor's application to modify its inventory of motor vehicle diesel fuel, NRLM diesel fuel, or heating oil for a given compliance period. EPA may grant an application to address unique circumstances, where appropriate, such as the start up of a new pipeline or pipeline segment.

(h) *Additional requirements for aggregated facilities consisting of a refinery and a truck loading terminal.* In addition to the volume balance requirements required by paragraphs (a) through (g) of this section, aggregated facilities consisting of a refinery and a truck loading terminal are responsible for balance calculations on the volume difference between the total volume of diesel fuel sold over the truck loading terminal rack and the production volume from the batch reports. Mathematically, the difference will be the volume of fuel received from external sources and passed through to another facility.

[69 FR 39194, June 29, 2004, as amended at 70 FR 40896, July 15, 2005; 70 FR 70511, Nov. 22, 2005; 71 FR 25720, May 1, 2006; 75 FR 22974, Apr. 30, 2010]

§ 80.600 What records must be kept for purposes of the designate and track provisions?

(a) In addition to the requirements of § 80.592 and § 80.602, the following recordkeeping requirements shall apply to refiners and importers:

(1) Any refiner or importer shall maintain the records specified in paragraphs (a)(6) through (a)(10) of this section for each batch of distillate fuel that it transfers custody of and designates during the time period from June 1, 2006 through May 31, 2010, with the following categories:

(i) #1D 15 ppm sulfur motor vehicle diesel fuel;

(ii) #2D 15 ppm sulfur motor vehicle diesel fuel;

(iii) 15 ppm sulfur NRLM diesel fuel;

(iv) #1D 500 ppm sulfur motor vehicle diesel fuel;

(v) #2D 500 ppm sulfur motor vehicle diesel fuel;

(vi) 500 ppm sulfur NRLM diesel fuel;

(vii) NP 15 ppm sulfur motor vehicle diesel fuel;

(viii) NP 500 ppm sulfur motor vehicle diesel fuel; or,

(ix) Exempt distillate fuels such as fuels that are covered by a national security exemption under § 80.606, fuels that are used for purposes of research and development pursuant to § 80.607, and fuels used in the U.S. Territories pursuant to § 80.608 (including additional identifying information).

(2) Any refiner or importer shall maintain the records specified in paragraphs (a)(6) through (a)(10) of this section for each batch of distillate fuel that it transfers custody of and designates during the time period from June 1, 2007 through May 31, 2010 with the following categories:

(i) High sulfur NRLM diesel fuel; or

(ii) Heating oil.

(3) Any refiner or importer shall maintain the records specified in paragraphs (a)(6) through (a)(10) of this section for each batch of distillate fuel that it transfers custody of and designates during the time period from June 1, 2010 through May 31, 2012 with the following categories:

(i) 500 ppm sulfur NR diesel fuel;

(ii) 500 ppm sulfur LM diesel fuel;

(iii) Heating oil; or

(iv) Exempt distillate fuels such as fuels that are covered by a national security exemption under § 80.606, fuels that are used for purposes of research and development pursuant to § 80.607, and fuels used in the U.S. Territories pursuant to § 80.608 (including additional identifying information).

(4) Any refiner or importer shall maintain the records specified in paragraphs (a)(6) through (a)(10) of this section for each batch of distillate fuel that it transfers custody of and designates during the time period from June 1, 2012 through May 31, 2014 with the following categories:

(i) 500 ppm sulfur NRLM diesel fuel;

(ii) Heating oil; or

(iii) Exempt distillate fuels such as fuels that are covered by a national security exemption under § 80.606, fuels that are used for purposes of research and development pursuant to § 80.607, and fuels used in the U.S. Territories pursuant to § 80.608 (including additional identifying information).

(5) Any refiner or importer shall maintain the records specified in paragraphs (a)(6) through (10) of this section for each batch of distillate or residual fuel that it transfers custody of and designates from June 1, 2014, and later as any of the following categories:

(i) Heating oil.

(ii) ECA marine fuel.

(6) The records for each batch with designations identified in paragraphs (a)(1) through (a)(5) of this section must clearly and accurately identify the batch number (including an indication as to whether the batch was received into the facility, produced by the facility, imported into the facility, or delivered from the facility), date and time of day (if multiple batches are delivered per day) that custody was transferred, the designation, the volume in gallons of the batch, and the name and the EPA entity and facility registration number of the facility to whom such batch was transferred.

(7) Any refiner or importer shall, for each of its facilities, maintain records that clearly and accurately identify the total volume in gallons of designated fuel identified in paragraphs (a)(1) through (a)(5) of this section transferred over each compliance period. The records shall be maintained separately for each fuel designated in paragraphs (a)(1) through (a)(5) of this section, and for each EPA entity and facility registration number to whom custody of the fuel was transferred.

(8) Notwithstanding the provisions of paragraphs (a)(6) and (a)(7) of this section, records of batches delivered of 500 ppm sulfur motor vehicle diesel fuel on which taxes have been paid per Section 4082 of the Internal Revenue Code (26 U.S.C. 4082) and of 500 ppm sulfur NRLM diesel fuel into which dye has been added per Section 4082 of the Internal Revenue Code (26 U.S.C. 4082), and of 500 ppm sulfur LM diesel fuel which has been properly marked pursuant to § 80.510(e) are not required to be maintained separately for each entity and facility to which the fuel was delivered.

(9) Notwithstanding the provisions of paragraphs (a)(6) and (a)(7) of this section, records of heating oil batches delivered that have been properly marked pursuant to § 80.510(d) through (f) and records of LM diesel fuel batches delivered that have been properly marked pursuant to § 80.510(e) are not required to be maintained separately for each entity and facility to which the fuel was delivered.

(10) Any refiner or importer shall maintain copies of all product transfer documents required under § 80.590. If all information required in paragraph (a)(6) of this section is on the product transfer document for a batch, then the provisions of this paragraph (a)(10) shall satisfy the requirements of paragraph (a)(6) of this section for that batch.

(11) Any refiner or importer shall maintain records related to annual compliance calculations performed under § 80.599 and to information required to be reported to the Administrator under § 80.601.

(12) Records must be maintained that demonstrate compliance with a refiner's compliance plan required under § 80.554, for distillate fuel designated as high sulfur NRLM diesel fuel and delivered from June 1, 2007 through May 31, 2010, for distillate fuel designated as 500 ppm sulfur NR diesel fuel and delivered from June 1, 2010, through May 31, 2012, and for distillate fuel designated as 500 ppm sulfur NRLM diesel fuel and delivered from June 1, 2012, through May 31, 2014, in the areas specified in § 80.510(g)(2).

(13) Refiners and importers who also receive fuel from another facility must also comply with the requirements of

paragraph (b) of this section separately for those volumes.

(b) In addition to the requirements of § 80.592 and § 80.602, the following recordkeeping requirements shall apply to distributors:

(1) Any distributor shall maintain the records specified in paragraphs (b)(2) through (b)(10) of this section for each batch of distillate fuel with the following designations for which custody is received or delivered as well as any batches produced. Records shall be kept separately for each of its facilities.

(i) For each facility that receives or distributes #2D 15 ppm sulfur motor vehicle diesel fuel or #2D 500 ppm sulfur motor vehicle diesel fuel, records for each batch of diesel fuel with the following designations for which custody is received or delivered during the time period from June 1, 2006 through May 31, 2007:

(A) #1D 15 ppm sulfur motor vehicle diesel fuel;

(B) #2D 15 ppm sulfur motor vehicle diesel fuel;

(C) #1D 500 ppm sulfur motor vehicle diesel fuel;

(D) #2D 500 ppm sulfur motor vehicle diesel fuel;

(E) California diesel fuel as defined in § 80.616 which is transferred out of the State of California pursuant to the provisions of § 80.617(b);

(F) NP 15 ppm sulfur motor vehicle diesel fuel;

(G) NP 500 ppm sulfur motor vehicle diesel fuel; or

(H) Exempt distillate fuels such as fuels that are covered by a national security exemption under § 80.606, fuels that are used for purposes of research and development pursuant to § 80.607, and fuels used in the U.S. Territories pursuant to § 80.608 (including additional identifying information).

(ii) For each facility, records for each batch of diesel fuel with the following designations for which custody is received or delivered as well as any batches produced during the time period from June 1, 2007 through May 31, 2010:

(A) #1D 15 ppm sulfur motor vehicle diesel fuel;

(B) #2D 15 ppm sulfur motor vehicle diesel fuel;

(C) #1D 500 ppm sulfur motor vehicle diesel fuel;

(D) #2D 500 ppm sulfur motor vehicle diesel fuel;

(E) 500 ppm sulfur NRLM diesel fuel;

(F) 15 ppm sulfur NRLM diesel fuel;

(G) High sulfur NRLM diesel fuel;

(H) Heating oil;

(I) California diesel fuel as defined in § 80.616 which is transferred out of the State of California pursuant to the provisions of § 80.617(b);

(J) NP 15 ppm sulfur motor vehicle diesel fuel;

(K) NP 500 ppm sulfur motor vehicle diesel fuel; or

(L) Exempt distillate fuels such as fuels that are covered by a national security exemption under § 80.606, fuels that are used for purposes of research and development pursuant to § 80.607, and fuels used in the U.S. Territories pursuant to § 80.608 (including additional identifying information).

(iii) For each facility that receives unmarked fuel designated as NR diesel fuel, LM diesel fuel or heating oil, records for each batch of diesel fuel with the following designations for which custody is received or delivered as well as any batches produced during the time period from June 1, 2010 through May 31, 2012:

(A) 500 ppm sulfur NR diesel fuel;

(B) 500 ppm sulfur LM diesel fuel;

(C) Heating oil; or

(D) Exempt distillate fuels such as fuels that are covered by a national security exemption under § 80.606, fuels that are used for purposes of research and development pursuant to § 80.607, and fuels used in the U.S. Territories pursuant to § 80.608 (including additional identifying information).

(iv) For each facility that receives unmarked fuel designated as heating oil, records for each batch of diesel fuel with the following designations for which custody is received or delivered as well as any batches produced during the time period from June 1, 2012 through May 31, 2014:

(A) 500 ppm sulfur NRLM diesel fuel;

(B) Heating oil; or

(C) Exempt distillate fuels such as fuels that are covered by a national security exemption under § 80.606, fuels that are used for purposes of research and development pursuant to § 80.607,

and fuels used in the U.S. Territories pursuant to § 80.608 (including additional identifying information).

(v) For each facility that receives fuel designated as heating oil, records for each batch of distillate or residual fuel with any of the following designations for which custody is received or delivered as well as any batches produced from June 1, 2014, and beyond:

(A) 1,000 ppm sulfur ECA marine fuel.

(B) Heating oil.

(C) Exempt distillate fuels such as fuels that are covered by a national security exemption under § 80.606, fuels that are used for purposes of research and development pursuant to § 80.607, and fuels used in the U.S. Territories pursuant to § 80.608 (including additional identifying information).

(vi) From June 1, 2007 through May 31, 2010, for those facilities in the areas specified in § 80.510(g)(2) that receive unmarked fuel designated as high sulfur NRLM diesel fuel:

(A) High sulfur NRLM diesel fuel;

(B) Heating oil; or

(C) Exempt distillate fuels such as fuels that are covered by a national security exemption under § 80.606, fuels that are used for purposes of research and development pursuant to § 80.607, and fuels used in the U.S. Territories pursuant to § 80.608 (including additional identifying information).

(vii) From June 1, 2010 through May 31, 2012, for those facilities in the areas specified in § 80.510(g)(2) that receive unmarked fuel designated as 500 ppm sulfur NR diesel fuel, 500 ppm sulfur LM diesel fuel, or heating oil:

(A) 500 ppm sulfur NR diesel fuel;

(B) 500 ppm sulfur LM diesel fuel;

(C) Heating oil; or

(D) Exempt distillate fuels such as fuels that are covered by a national security exemption under § 80.606, fuels that are used for purposes of research and development pursuant to § 80.607, and fuels used in the U.S. Territories pursuant to § 80.608 (including additional identifying information).

(viii) From June 1, 2012 through May 31, 2014, for those facilities in the areas specified in § 80.510(g)(2) that receive unmarked fuel designated as 500 ppm sulfur NRLM diesel fuel or heating oil.

(A) 500 ppm sulfur NRLM diesel fuel;

(B) Heating oil; or

(C) Exempt distillate fuels such as fuels that are covered by a national security exemption under § 80.606, fuels that are used for purposes of research and development pursuant to § 80.607, and fuels used in the U.S. Territories pursuant to § 80.608 (including additional identifying information).

(2) Records that for each batch clearly and accurately identify the batch number (including an indication as to whether the batch was received into the facility, produced by the facility, imported into the facility, or delivered from the facility), date and time of day (if multiple batches are delivered per day) that custody was transferred, the designation, the volume in gallons of each batch of each fuel, and the name and the EPA entity and facility registration number of the facility to whom or from whom such batch was transferred.

(3) Records that clearly and accurately identify the total volume in gallons of each designated fuel identified under paragraph (b)(1) of this section transferred over each of the compliance periods, and over the periods from June 1, 2006 to the end of each compliance period. The records shall be maintained separately for each fuel designated under paragraph (b)(1) of this section, and for each EPA entity and facility registration number from whom the fuel was received or to whom it was delivered. For batches of fuel received from facilities without an EPA facility registration number:

(i) Any batches of fuel received marked pursuant to § 80.510(d) or (f) shall be deemed to be designated as heating oil.

(ii) Any batches of fuel received marked pursuant to § 80.510(e) shall be deemed to be designated as heating oil or LM diesel fuel.

(iii) Any batches of fuel received on which taxes have been paid pursuant to Section 4082 of the Internal Revenue Code (26 CFR 48.4082) shall be deemed to be designated as motor vehicle diesel fuel.

(iv) Any 500 ppm sulfur diesel fuel dyed pursuant to § 80.520(b) and not marked pursuant to § 80.510(d) or (f) shall be deemed to be designated as NRLM diesel fuel.

(v) Any diesel fuel with less than or equal to 500 ppm sulfur which is dyed pursuant to § 80.520(b) and not marked pursuant to § 80.510(e) shall be deemed to be NR diesel fuel.

(vi) Beginning June 1, 2014, any batches of fuel with greater than 15 ppm sulfur, but less than or equal to 1,000 ppm sulfur, and not designated as heating oil shall be deemed to be 1,000 ppm ECA marine fuel.

(4) Notwithstanding the provisions of paragraphs (b)(2) and (b)(3) of this section, for batches of 500 ppm sulfur motor vehicle diesel fuel delivered on which taxes have been paid per Section 4082 of the Internal Revenue Code (26 U.S.C. 4082) and 500 ppm sulfur NRLM diesel fuel into which red dye has been added per Section 4082 of the Internal Revenue Code (26 U.S.C. 4082), records are not required to be maintained separately for each entity or facility to whom fuel was delivered.

(5) Notwithstanding the provisions of paragraphs (b)(2) and (b)(3) of this section, for batches of heating oil delivered that are marked pursuant to § 80.510(d) through (f), records do not need to identify the EPA entity or facility registration number to which fuel was delivered.

(6) Notwithstanding the provisions of paragraphs (b)(2) and (b)(3) of this section, for batches of LM diesel fuel delivered that are marked pursuant to § 80.510(e), records do not need to identify the EPA entity or facility registration number to which fuel was delivered.

(7) Records that clearly and accurately reflect the beginning and ending inventory volume for each of the fuels for which records must be kept under paragraph (b)(1) of this section. Such records shall be maintained separately by each entity and facility consistent with the compliance periods defined in §§ 80.598 and 80.599.

(8) (i) If adjustments are made to inventory, the records must include detailed information related to the amount, type of, and reason for such adjustment.

(ii) If adjustments are made because of measurement error or variation, the records must include the adjustment made, the meter or gauge or other reading(s), and the name of the person who took such reading(s) and or applied the adjustment.

(9) For distributors that are required to keep records under paragraphs (b)(1) through (b)(8) of this section for truck loading terminals, records related to quarterly or annual compliance calculations, as applicable, performed under § 80.599 and to information required to be reported to the Administrator under § 80.601.

(10) For distributors that are required to keep records under paragraphs (b)(1) through (b)(8) of this section for facilities other than truck loading terminals, records related to annual compliance calculations performed under § 80.599 and to information required to be reported to the Administrator under § 80.601.

(c) Notwithstanding the provisions of paragraph (b) of this section, records of heating oil received are not required to be maintained for facilities that do not receive any heating oil which is unmarked pursuant to § 80.510(d) through (f), or LM diesel fuel which is unmarked pursuant to § 80.510(e).

(d) Notwithstanding the provisions of paragraph (b) of this section, records of 500 ppm sulfur MVNRLM diesel fuel received are not required to be maintained for facilities that do not receive any motor vehicle diesel fuel for which taxes have not already been paid pursuant to Section 4082 of the Internal Revenue Code (26 U.S.C. 4082) or NRLM diesel fuel which is undyed pursuant to § 80.520(b).

(e) The provisions of paragraphs (b)(1)(iii) and (iv) of this section do not apply to facilities located in the areas specified in § 80.510(g)(1) and (g)(2) unless they deliver marked heating oil or LM diesel fuel to areas outside the areas specified in § 80.510(g)(1) and (g)(2).

(f) Ultimate consumers that receive any batch of high sulfur NRLM diesel fuel beginning June 1, 2007 in areas listed in § 80.510(g)(2) must maintain records of each batch of fuel received for use in NRLM equipment pursuant to the compliance plan provisions of § 80.554, unless otherwise allowed by EPA.

(g) Ultimate consumers that receive any batch of 500 ppm sulfur NR diesel fuel beginning June 1, 2010 or NRLM

diesel fuel beginning June 1, 2012 in the areas listed in § 80.510(g)(2) must maintain records of each batch of fuel received for use in NR or NRLM equipment, as appropriate, pursuant to the compliance plan provisions of § 80.554, unless otherwise allowed by EPA.

(h) For purposes of this section, each portion of a shipment of designated distillate fuel under this section that is differently designated from any other portion, even if shipped as fungible product having the same sulfur content, shall be a separate batch.

(i) Additional records that must be kept by mobile facilities. Any registered mobile facility must keep records of all contracts from any contracted components (*e.g.*, tank truck, barge, marine tanker, rail car, *etc.*) in each of its registered mobile facilities.

(j) The records required in this section must be made available to the Administrator or the Administrator's designated representative upon request.

(k) Notwithstanding the provisions of this section, product transfer documents must be maintained under the provisions of §§ 80.590, 80.592, and 80.602.

(l) The records required in this section must be kept for five years after they are required to be collected.

(m) Identifications of fuel designations can be limited to a sub-designation that accurately identifies the fuel and do not need to also include the broader designation. For example, NR diesel fuel does not also need to be designated as NRLM or MVNRLM diesel fuel.

(n) Notwithstanding the provisions of paragraphs (b)(2) and (b)(3) of this section, for batches of 15 ppm sulfur motor vehicle diesel fuel or California diesel fuel under § 80.617(b) on which taxes have been paid per Section 4082 of the Internal Revenue Code (26 U.S.C. 4082), and 15 ppm sulfur NRLM diesel fuel or California diesel fuel under § 80.617(b) into which red dye has been added per Section 4082 of the Internal Revenue Code (26 U.S.C. 4082), records are not required to be maintained separately for each entity or facility to whom fuel was delivered.

(o) In addition to the requirements of §§ 80.592 and 80.602, the following recordkeeping requirements shall apply to aggregated facilities consisting of a refinery and truck loading terminal:

(1) Any aggregated facility consisting of a refinery and truck loading terminal shall maintain records of all the following information for each batch of distillate fuel (and/or residual fuel with a sulfur level of 1,000 ppm or less that is intended for use in an ECA) produced by the refinery and sent over the aggregated facility's truck loading terminal rack:

(i) The batch volume.

(ii) The batch number, assigned under the batch numbering procedures under §§ 80.65(d)(3) and 80.502(d)(1).

(iii) The date of production.

(iv) A record designating the batch as distillate or residual fuel meeting the 500 ppm, 15 ppm, or 1,000 ppm ECA marine sulfur standard.

(v) A record indicating the volumes that were either taxed, dyed, or dyed and marked.

(2) Volume reports for all distillate fuel (and/or residual fuel with a sulfur level of 1,000 ppm or less that is intended for use in an ECA) from external sources (*i.e.*, from another refiner or importer), as described in § 80.601(f)(2), sent over the aggregated facility's truck rack.

[69 FR 39196, June 29, 2004, as amended at 70 FR 40898, July 15, 2005; 70 FR 70511, Nov. 22, 2005; 71 FR 25721, May 1, 2006; 75 FR 22974, Apr. 30, 2010]

§ 80.601 What are the reporting requirements for purposes of the designate and track provisions?

(a) *Quarterly compliance period reports.* Beginning February 28, 2007 and continuing through August 31, 2010, each entity required to register under § 80.597 and to maintain records under § 80.600 must report the following information separately for each of its facilities to the Administrator as specified in paragraph (d)(1) of this section except as provided in paragraph (e) of this section.

(1) Separately for each fuel designation category specified in paragraphs (a)(1)(i) and (a)(1)(ii) of this section and separately for each transferee facility, the total volume in gallons of distillate fuel designated under § 80.598 for which custody was delivered by the reporting facility to any other entity or facility,

and the EPA entity and facility registration number(s), as applicable, of the transferee.

(i) Beginning with the first compliance period and continuing up to and including the compliance period that starts April 1, 2007, fuel designated as 15 ppm or 500 ppm motor vehicle diesel fuel, or California diesel fuel as defined in § 80.616 which is distributed outside the State of California pursuant to § 80.617(b).

(ii) Beginning with the compliance period that starts June 1, 2007 and continuing up to and including the final reporting period, all fuel designation categories.

(2) Separately for each designation category specified in paragraphs (a)(2)(i) and (a)(2)(ii) of this section and separately for each transferor facility, the total volume in gallons of distillate fuel designated under § 80.598 for which custody was received by the reporting facility, and the EPA entity and facility registration number(s), as applicable, of the transferor.

(i) Beginning with the first compliance period and continuing up to and including the compliance period that starts April 1, 2007, fuel designated as 15 ppm or 500 ppm motor vehicle diesel fuel, or California diesel fuel as defined in § 80.616 which is distributed outside the State of California pursuant to § 80.617(b).

(ii) Beginning with the compliance period that starts June 1, 2007 and continuing up to and including the final reporting period, all fuel designation categories.

(3) Any entity that receives custody of distillate fuel from another entity or facility that does not have an EPA facility identification number must report such batches as follows:

(i) Any batch of distillate fuel for which custody is received and which is marked pursuant to § 80.510(d) or (f) shall be deemed designated as heating oil, any batch of distillate fuel for which custody is received and which is marked pursuant to § 80.510(e) shall be deemed designated as heating oil or LM diesel fuel as applicable, and the report shall include that information under that designation.

(ii) Any batch of distillate fuel for which custody is received and for which taxes have been paid pursuant to Section 4082 of the Internal Revenue Code (26 U.S.C. 4082) shall be deemed designated as motor vehicle diesel fuel and the report shall include it under that designation.

(iii) Any batch of 500 ppm sulfur diesel fuel dyed pursuant to § 80.520(b) and not marked pursuant to § 80.510(d) and (f), and for which custody is received, shall be deemed designated as NRLM diesel fuel and the report shall include it under that designation.

(iv) Any batch of 500 ppm sulfur diesel fuel dyed pursuant to § 80.520(b) and not marked pursuant to § 80.510(e), and for which custody is received, shall be deemed designated as NR diesel fuel and the report shall include it under that designation.

(4) In the case of truck loading terminals, the results of all compliance calculations required under § 80.599, and including:

(i) The total volumes received of each fuel designation required to be reported in paragraphs (a)(1) through (a)(3) of this section over the quarterly compliance period.

(ii) The total volumes delivered of each fuel designation required to be reported in paragraphs (a)(1) through (a)(3) of this section over the quarterly compliance period.

(iii) The total volumes produced or imported at the facility of each fuel designation required to be reported in paragraphs (a)(1) through (a)(3) of this section over the quarterly compliance period.

(iv) Beginning and ending inventories of each fuel designation required to be reported in paragraphs (a)(1) through(a)(3) of this section over the quarterly compliance period.

(v) The volume balance under §§ 80.599(b)(4) and 80.598(b)(9)(vi).

(vi) Beginning with the compliance period starting June 1, 2007, the volume balance under §§ 80.599(c)(2) and 80.598(b)(9)(viii)(A).

(b) *Annual reports.* Beginning August 31, 2007, all entities required to register under § 80.597 and to maintain records for batches of fuel under § 80.600 must report the following information separately for each of its facilities to the Administrator on an annual basis, as

specified in paragraph (d)(2) of this section except as provided in paragraph (e) of this section.

(1) Separately for each designation category for which records are required to be kept under § 80.600 and separately for each transferor facility;

(i) The total volume in gallons of distillate fuel designated under § 80.598 for which custody was received by the reporting facility, and the EPA entity and facility registration number(s), as applicable, of the transferor; and

(ii) The total volume in gallons of distillate fuel designated under § 80.598 which was produced or imported by the reporting facility.

(2) Separately for each designation category for which records are required to be kept under § 80.600 and separately for each transferee facility, the total volume in gallons of distillate fuel designated under § 80.598 for which custody was delivered by the reporting facility to any other entity or facility, and the EPA entity and facility registration number(s), as applicable, of the transferee except as provided under § 80.600(a)(7), (a)(8), (b)(4), and (b)(5).

(3) The results of all compliance calculations required under § 80.599, and including:

(i) The total volumes in gallons received of each fuel designation required to be reported in paragraph (b)(1) of this section over the applicable annual compliance period.

(ii) The total volumes produced or imported at the facility of each fuel designation required to be reported in paragraph (b)(1) of this section over the quarterly compliance period.

(iii) The total volumes in gallons delivered of each fuel designation required to be reported in paragraph (b)(2) of this section over the applicable annual compliance period.

(iv) Beginning and ending inventories of each fuel designation required to be reported in paragraphs (b)(1) and (b)(2) of this section for the annual compliance period.

(v) In the areas specified in § 80.510(g)(2), for fuel designated as high sulfur NRLM diesel fuel delivered from June 1, 2007 through May 31, 2010, for fuel designated as 500 ppm NR diesel fuel delivered from June 1, 2010 through May 31, 2012, and for fuel designated as 500 ppm sulfur NRLM diesel fuel from June 1, 2012 through May 31, 2014, the refiner must report all information required under its compliance plan approved pursuant to § 80.554(a)(4) and (b)(4) and including the ultimate consumers to whom each batch of fuel was delivered and the total delivered to each ultimate consumer for the compliance period.

(vi) Ending with the report due August 31, 2010, the volume balance under § 80.598(b)(9)(vi) and § 80.599(b)(4).

(vii) Ending with the report due August 31, 2010, the volume balance under § 80.598(b)(9)(vii) and § 80.599(b)(5), if applicable.

(viii) Ending with the report due August 31, 2010, the volume balance under § 80.598(b)(9)(viii)(A) and § 80.599(c)(2).

(ix) Beginning with the report due August 31, 2010, the volume balance under § 80.598(b)(8)(viii)(B) and § 80.599(c)(4).

(x) Beginning with the report due August 31, 2011, and ending with the report due August 31, 2012, the volume balance under §§ 80.598(b)(9)(ix) and 80.599(d)(2).

(4) In the case of aggregated facilities consisting of a refinery and truck loading terminal, the results of annual compliance calculations under § 80.598 for any distillate fuel received from an external source on which taxes have not been assessed and is not dyed and/or marked that the refinery will be handing off to another party, rather than selling over the truck loading terminal rack.

(c) *Additional information*. The Administrator may request any additional information necessary to determine compliance with the requirements of §§ 80.598 and 80.599.

(d) *Submission of reports for quarterly and annual compliance periods*. (1) All quarterly reports shall be submitted to the Administrator for the compliance periods defined in § 80.599(a)(1) as follows:

(i) The reports for the first and second quarterly compliance periods covering June 1, 2006 to September 30, 2006 and October 1, 2006 to December 31, 2006 respectively shall be submitted by February 28, 2007.

(ii) The reports for the third and fourth quarterly compliance periods

covering January 1, 2007 to March 31, 2007 and April 1, 2007 to May 31, 2007 respectively shall be submitted by August 31, 2007.

(iii) The report for the fifth quarterly compliance period covering June 1, 2007 to September 30, 2007 shall be submitted by November 30, 2007.

(iv) The report for the sixth quarterly compliance period covering October 1, 2007 to December 31, 2007 shall be submitted by February 28, 2008.

(v) The reports for the quarterly compliance periods beginning with the first period in 2008 up to and including the first period in 2010 shall be submitted as follows:

(A) The report for the period covering January 1 to March 31 shall be submitted by the following May 31.

(B) The report covering the period covering April 1 to June 30 shall be submitted by the following August 31.

(C) The report for the period from July 1 to September 30 shall be submitted by the following November 30.

(D) The report for the quarterly compliance period from October 1 to December 31 shall be submitted by the following February 28.

(vi) The report for the quarterly compliance period from April 1, 2010 to May 31, 2010 shall be submitted by August 31, 2010.

(vii) The report for the last quarterly compliance period from June 1, 2010 to September 30, 2010 shall be submitted by November 30, 2010.

(2) All annual reports shall be submitted to the Administrator for the compliance periods defined in § 80.599(a)(2) by August 31.

(3) All reports shall be submitted on forms and following procedures specified by the Administrator, shall include a statement that volumes reported to the Administrator under this section are in substantial agreement to volumes reported to the Internal Revenue Service (and if these volumes are not in substantial agreement, an explanation must be included) and shall be signed and certified by a responsible corporate officer of the reporting entity.

(e) *Exclusions*. Notwithstanding the provisions of this section, an entity is not required to report under paragraphs (a) or (b) of this section for facilities whose only recordkeeping requirements under § 80.600 are under § 80.600 (f) or (g) or to maintain records solely related to calculating compliance with the downgrading limitation under § 80.527, § 80.599(e) and § 80.600(b)(1)(i) and (ii).

(f) *Additional requirements for aggregated facilities consisting of a refinery and a truck loading terminal*. In addition to the reporting requirements listed by paragraphs (a) through (e) of this section, as applicable, such aggregated facilities are also subject to the following requirements:

(1) *Batch reports*. Reports containing the requirements detailed in §§ 80.592(f) and 80.600(m), must be submitted for all distillate produced by the refinery and sent over the truck loading terminal rack.

(2) *Quarterly volume reports*. Reports detailing the quarterly totals of all designations, including whether the fuel was taxed or contained red dye (or red dye and the yellow marker), that left the truck loading terminal rack must be submitted for all distillate received from an external source or produced by the refinery.

(3) *Quarterly hand-off reports*. (i) Reports detailing the quarterly totals of all designations of fuel received from external refiner/importer sources, if any.

(ii) Reports detailing the quarterly totals of all undesignated fuel received from external refiner/importer sources that entered the designate and track system.

[69 FR 39198, June 29, 2004, as amended at 70 FR 40898, July 15, 2005; 70 FR 70512, Nov. 22, 2005; 71 FR 25722, May 1, 2006; 75 FR 22975, Apr. 30, 2010]

§ 80.602 What records must be kept by entities in the NRLM diesel fuel, ECA marine fuel, and diesel fuel additive production, importation, and distribution systems?

(a) *Records that must be kept by parties in the NRLM diesel fuel, ECA marine fuel and diesel fuel additive production, importation, and distribution systems*. Beginning June 1, 2007, or June 1, 2006, if that is the first period credits are generated under § 80.535, any person who produces, imports, sells, offers for sale, dispenses, distributes, supplies, offers

for supply, stores, or transports nonroad, locomotive or marine diesel fuel, or ECA marine fuel (beginning June 1, 2014) subject to the provisions of this subpart, must keep all the following records:

(1) The applicable product transfer documents required under §§ 80.590 and 80.591.

(2) For any sampling and testing for sulfur content for a batch of NRLM diesel fuel produced or imported and subject to the 15 ppm sulfur standard or any sampling and testing for sulfur content as part of a quality assurance testing program, and any sampling and testing for cetane index, aromatics content, marker solvent yellow 124 content or dye solvent red 164 content of NRLM diesel fuel, ECA marine fuel, NRLM diesel fuel additives or heating oil:

(i) The location, date, time and storage tank or truck identification for each sample collected;

(ii) The name and title of the person who collected the sample and the person who performed the testing; and

(iii) The results of the tests for sulfur content (including, where applicable, the test results with and without application of the adjustment factor under § 80.580(d)), for cetane index or aromatics content, dye solvent red 164, marker solvent yellow 124 (as applicable), and the volume of product in the storage tank or container from which the sample was taken.

(3) The actions the party has taken, if any, to stop the sale or distribution of any NRLM diesel fuel or ECA marine fuel found not to be in compliance with the sulfur standards specified in this subpart, and the actions the party has taken, if any, to identify the cause of any noncompliance and prevent future instances of noncompliance.

(b) *Additional records to be kept by refiners and importers of NRLM diesel fuel and ECA marine fuel.* Beginning June 1, 2007, or June 1, 2006, pursuant to the provisions of §§ 80.535 or 80.554(d) (or June 1, 2014, pursuant to the provisions of § 80.510(k)), any refiner producing distillate or residual fuel subject to a sulfur standard under §§ 80.510, 80.513, 80.536, 80.554, 80.560, or 80.561, for each of its refineries, and any importer importing such fuel separately for each facility, shall keep records that include the following information for each batch of NRLM diesel fuel, ECA marine fuel, or heating oil produced or imported:

(1) The batch volume.

(2) The batch number, assigned under the batch numbering procedures under § 80.65(d)(3).

(3) The date of production or import.

(4) A record designating the batch as one of the following:

(i) NRLM diesel fuel, NR diesel fuel, LM diesel fuel, ECA marine fuel, or heating oil, as applicable.

(ii) Meeting the 500 ppm sulfur standard of § 80.510(a), the 15 ppm sulfur standard of § 80.510(b) and (c), the 1,000 ppm sulfur standard of § 80.510(k), or other applicable standard.

(iii) Dyed or undyed with visible evidence of solvent red 164.

(iv) Marked or unmarked with solvent yellow 124.

(5) For foreign refiners and importers of their fuel, the designations and other records required to be kept under § 80.620.

(6) All of the following information regarding credits, kept separately for each compliance period, kept separately for each refinery and for each importer facility, kept separately if converted under § 80.535(a) and (b) or § 80.535(c) and (d), and kept separately from motor vehicle diesel fuel credits:

(i) The number of credits in the refiner's or importer's possession at the beginning of the calendar year.

(ii) The number of credits generated.

(iii) The number of credits used.

(iv) If any were obtained from or transferred to other parties, for each other party, its name, its EPA refiner or importer registration number consistent with § 80.597, and the number obtained from, or transferred to, the other party.

(v) The number in the refiner's or importer's possession that will carry over into the subsequent calendar year compliance period.

(vi) Commercial documents that establish each transfer of credits from the transferor to the transferee.

(7) The calculations used to determine baselines or compliance with the

volume requirements and volume percentages, as applicable, under this subpart.

(8) The calculations used to determine the number of credits generated.

(9) A copy of reports submitted to EPA under § 80.604.

(c) *Additional records importers must keep.* Any importer shall keep records that identify and verify the source of each batch of certified DFR-Diesel and non-certified DFR-Diesel imported and demonstrate compliance with the requirements under § 80.620.

(d) *Additional records that must be kept by mobile facilities.* Any registered mobile facility must keep records of all contracts from any contracted components (*e.g.* tank truck, barge, marine tanker, rail car, etc.) of each of its registered mobile facilities.

(e) *Length of time records must be kept.* The records required in this section shall be kept for five years from the date they were created, except that records relating to credit transfers shall be kept by the transferor for five years from the date the credits were transferred, and shall be kept by the transferee for five years from the date the credits were transferred, used or terminated, whichever is later.

(f) *Make records available to EPA.* On request by EPA, the records required in this section must be made available to the Administrator or the Administrator's representative. For records that are electronically generated or maintained, the equipment and software necessary to read the records shall be made available, or if requested by EPA, electronic records shall be converted to paper documents which shall be provided to the Administrator's authorized representative.

(g) *Additional records to be kept by aggregated facilities consisting of a refinery and a truck loading terminal.* In addition to the applicable records required by paragraphs (a) through (f) of this section, such aggregated facilities must also keep the following records:

(1) All the following information for each batch of distillate fuel (or residual fuel with a sulfur level of 1,000 ppm or less if such fuel is intended for use in an ECA) produced by the refinery and sent over the aggregated facility's truck rack:

(i) The batch volume.

(ii) The batch number, assigned under the batch numbering procedures under §§ 80.65(d)(3) and 80.502(d)(1).

(iii) The date of production.

(iv) A record designating the batch as one of the following:

(A) NRLM diesel fuel, NR diesel fuel, LM diesel fuel, ECA marine fuel, or heating oil, as applicable.

(B) Meeting the 500 ppm sulfur standard of § 80.510(a), the 15 ppm sulfur standard of § 80.510(b) and (c), the 1,000 ppm sulfur standard of § 80.510(k), or other applicable standard.

(C) Dyed or undyed with visible evidence of solvent red 164.

(D) Marked or unmarked with solvent yellow 124.

(2) Hand-off reports for all distillate fuel (or residual fuel with a sulfur level of 1,000 ppm or less if such fuel is intended for use in an ECA) from external sources (*i.e.*, from another refiner or importer), as described in § 80.601(f)(2).

[69 FR 39199, June 29, 2004, as amended at 70 FR 70513, Nov. 22, 2005; 71 FR 25723, May 1, 2006; 75 FR 22975, Apr. 30, 2010]

§ 80.603 What are the pre-compliance reporting requirements for NRLM diesel fuel?

(a) Except as provided in paragraph (c) of this section, beginning on June 1, 2005, and for each year until June 1, 2011, or until the entity produces or imports NR or NRLM diesel fuel meeting the 15 ppm sulfur standard of § 80.510(b) or (c), all refiners and importers planning to produce or import NR or NRLM diesel fuel, shall submit the following information to EPA:

(1) Any changes to the information submitted for the company registration;

(2) Any changes to the information submitted for any refinery or import facility registration;

(3) Any estimate of the average daily volumes (in gallons) of each sulfur grade of motor vehicle and NRLM diesel fuel produced (or imported) at each refinery (or import facility). These volume estimates must be provided both for fuel produced from crude oil, as well as any fuel produced from other sources, and must be provided for the

periods of June 1, 2010 through December 31, 2010, calendar years 2011 through 2013, January 1, 2014 through May 31, 2014, and June 1, 2014 through December 31, 2014;

(4) If expecting to participate in the credit trading program, estimates of the number of credits to be generated and/or used each year the program;

(5) Information on project schedule by quarter of known or projected completion date by the stage of the project, for example, following the five project phases described in EPA's June 2002 Highway Diesel Progress Review report (EPA420-R–02–016, *http://www.epa.gov/otaq/regs/hd2007/420r02016.pdf*): Strategic planning, Planning and front-end engineering, Detailed engineering and permitting, Procurement and construction, and Commissioning and startup;

(6) Basic information regarding the selected technology pathway for compliance (*e.g.*, conventional hydrotreating vs. other technologies, revamp vs. grassroots, etc.);

(7) Whether capital commitments have been made or are projected to be made; and

(8) The pre-compliance reports due in 2006 and later years must provide an update of the progress in each of these areas.

(b) Reports under this section may be submitted in conjunction with reports submitted under § 80.594.

(c) The pre-compliance reporting requirements of this section do not apply to refineries subject to the provisions of § 80.513.

[69 FR 39200, June 29, 2004]

§ 80.604 What are the annual reporting requirements for refiners and importers of NRLM diesel fuel?

Beginning with the annual compliance period that begins June 1, 2007, or the first period during which credits are generated, transferred or used, or the first period during which NRLM diesel fuel or heating oil is produced under a small refiner compliance option under this subpart, whichever is earlier, any refiner or importer who produces or imports NRLM diesel fuel must submit annual compliance reports for each refinery and importer facility that contain the following information required, and such other information as EPA may require.

(a) *All refiners and importers.* (1) The refiner or importer's company name and the EPA company and facility identification number.

(2) If the refiner is a small refiner, a statement regarding to which small refiner option it is subject.

(b) *Small refiners.* (1) For each refinery of small refiners subject to the provisions of § 80.551(g) and § 80.554(a) for each compliance period from June 1, 2007 through May 31, 2010, report the following:

(i) The total volume of diesel fuel produced and designated as NRLM diesel fuel.

(ii) The volume of diesel fuel produced and designated as NRLM diesel fuel having a sulfur content less than or equal to the 500 ppm sulfur standard under § 80.510(a).

(iii) The total volume of diesel fuel produced and designated as NRLM diesel fuel having a sulfur content greater than the 500 ppm sulfur standard under § 80.510(a).

(iv) The total volume of heating oil produced.

(v) The baseline under § 80.554(a)(1).

(vi) The total volume of diesel fuel produced and designated as NRLM diesel fuel that is exempt from the 500 ppm sulfur standard of § 80.510(a).

(vii) The total volume, if any, of NRLM diesel fuel subject to the 500 ppm sulfur standard § 80.510(a) that had a sulfur content exceeding 500 ppm.

(2) For each refinery of small refiners subject to the provisions of § 80.551(g) and § 80.554(b), for each compliance period between June 1, 2010 and May 31, 2012, report the following:

(i) The total volume of diesel fuel produced and designated as NR diesel fuel.

(ii) The total volume of diesel fuel produced and designated as LM diesel fuel.

(iii) The total volume of diesel fuel produced and designated as NR diesel fuel subject to the 500 ppm sulfur standard under § 80.510(a).

(iv) The total volume of diesel fuel produced and designated as LM diesel fuel subject to the 500 ppm sulfur standard under § 80.510(a).

(v) The volume of diesel fuel produced and designated as NR diesel fuel having a sulfur content of 15 ppm or less.

(vi) The baseline under § 80.554(b)(1).

(vii) The total volume of NRLM diesel fuel produced that is eligible for the sulfur standard under § 80.510(a).

(viii) The total volume, if any, of NRLM diesel fuel subject to the 15 ppm sulfur standard that had a sulfur content in excess of 15 ppm.

(3) For each refinery of small refiners subject to the provisions of § 80.551(g) and § 80.554(b), for each compliance period between June 1, 2012 and May 31, 2014, report the following:

(i) The total volume of diesel fuel produced and designated as NRLM diesel fuel.

(ii) The total volume diesel fuel produced and designated as NRLM diesel fuel subject to the 500 ppm sulfur standard under § 80.510(a).

(iii) The total volume of diesel fuel produced and designated as NRLM diesel fuel having a sulfur content less than or equal to the 15 ppm sulfur standard under § 80.510(c).

(iv) The baseline under § 80.554(b)(1).

(v) The total volume of NRLM diesel fuel produced that is eligible for the 500 ppm sulfur standard under § 80.510(a).

(vi) The total volume, if any, of NRLM diesel fuel subject to the 15 ppm sulfur standard that had a sulfur content in excess of 15 ppm.

(4) For each refinery of a small refiner that elects to produce NRLM diesel fuel subject to the 15 ppm sulfur standard of § 80.510(c) beginning June 1, 2006 under § 80.551(g) and § 80.554(d), for each compliance period report the following:

(i) The total volume of diesel fuel produced and designated as NRLM diesel fuel.

(ii) The total volume of diesel fuel produced and designated as NRLM diesel fuel having a sulfur content less than or equal to 15 ppm.

(iii) The percentages of NRLM diesel fuel produced and designated having a sulfur content less than or equal to 15 ppm under § 80.554(d)(1)(i) and (ii).

(iv) The deficit, if any, and the number of credits purchased, if any, to cover any deficit as provided in § 80.554(d)(3).

(v) A report of the small refiner's progress toward compliance with the gasoline standards under §§ 80.240 and 80.255.

(c) *Credit generation and use.* Information regarding the generation, use, transfer and retirement of credits, separately by refinery and import facility, including the following:

(1) The number of credits at the beginning of the compliance period.

(2) The number of credits generated.

(3) The number of credits used.

(4) If any credits were obtained from or transferred to other refineries or importers, for each other refinery or importer, the name, address, the EPA company identification number, and the number of credits obtained from or transferred to the other party.

(5) The number of credits retired.

(6) The credit balance at the beginning and end of the compliance period.

(d) *Batch reports.* For each batch of NRLM diesel fuel and heating oil (if applicable) produced or imported and delivered during the compliance periods under paragraph (b) of this section, include the following:

(1) The batch volume.

(2) The batch number assigned using the batch numbering conventions under § 80.65(d)(3) and the appropriate designation under § 80.598.

(3) The date of production or import.

(4) For each batch provide the information specified in paragraph (a)(1) of this section.

(5) [Reserved]

(6) Whether the batch was dyed with visible evidence of dye solvent red 164 before leaving the refinery or import facility or was undyed.

(7) Whether the batch was marked with marker solvent yellow 124 before leaving the refinery or import facility or was unmarked.

(e) *Additional reporting requirements for importers.* Importers of NRLM diesel fuel are subject to the following additional requirements:

(1) The reporting requirements under § 80.620, if applicable.

(2) Importers must exclude certified DFR-Diesel from calculations under this section.

(f) *Report submission.* Any report required by this section must be—

(1) On forms and following procedures specified by the Administrator of EPA;

(2) Signed and certified as meeting all the applicable requirements of this subpart by the owner or a responsible corporate officer of the refiner or importer; and

(3) Except for small refiners subject to § 80.554(d), submitted to EPA no later than August 31 each year for the prior annual compliance period. Small refiners subject to the provisions of § 80.554(d), reports must be submitted August 31 for the previous reporting period.

(4) With the exception of reports required under paragraph (b)(3) of this section, no reports will be required under this section after August 31, 2014.

[69 FR 39200, June 29, 2004, as amended at 70 FR 40899, July 15, 2005]

EXEMPTIONS

§ 80.605 [Reserved]

§ 80.606 What national security exemption applies to fuels covered under this subpart?

(a) The standards of all the fuels listed in paragraph (b) of this section do not apply to fuel that is produced, imported, sold, offered for sale, supplied, offered for supply, stored, dispensed, or transported for use in any of the following:

(1) Tactical military motor vehicles or tactical military nonroad engines, vehicles or equipment, including locomotive and marine, having an EPA national security exemption from the motor vehicle emission standards under 40 CFR 85.1708, or from the nonroad engine emission standards under 40 CFR part 89, 92, 94, 1042, or 1068.

(2) Tactical military motor vehicles or tactical military nonroad engines, vehicles or equipment, including locomotive and marine, that are not subject to a national security exemption from vehicle or engine emissions standards as described in paragraph (a)(1) of this section but, for national security purposes (for purposes of readiness for deployment oversees), need to be fueled on the same fuel as the vehicles, engines, or equipment for which EPA has granted such a national security exemption.

(b) The exempt fuel must meet any of the following:

(1) The motor vehicle diesel fuel standards of § 80.520(a)(1), (a)(2), and (c).

(2) The nonroad, locomotive, and marine diesel fuel standards of § 80.510(a), (b), and (c).

(3) The 1,000 ppm ECA marine fuel standards of § 80.510(k).

(c) The exempt fuel must meet all the following conditions:

(1) It must be accompanied by product transfer documents as required under § 80.590.

(2) It must be segregated from nonexempt MVNRLM diesel fuel and ECA marine fuel at all points in the distribution system.

(3) It must be dispensed from a fuel pump stand, fueling truck or tank that is labeled with the appropriate designation of the fuel, such as ''JP–5'' or ''JP–8''.

(4) It may not be used in any motor vehicles or nonroad engines, equipment or vehicles, including locomotive and marine, other than the vehicles, engines, and equipment referred to in paragraph (a) of this section.

[69 FR 39201, June 29, 2004, as amended at 75 FR 22975, Apr. 30, 2010]

§ 80.607 What are the requirements for obtaining an exemption for diesel fuel or ECA marine fuel used for research, development or testing purposes?

(a) *Written request for a research and development exemption.* Any person may receive an exemption from the provisions of this subpart for diesel fuel or ECA marine fuel used for research, development, or testing purposes by submitting the information listed in paragraph (c) of this section to: Director, Transportation and Regional Programs Division (6406J), U.S. Environmental Protection Agency, 1200 Pennsylvania Avenue, NW., Washington, DC 20460 (postal mail); or Director, Transportation and Regional Programs Division, U.S. Environmental Protection Agency, 1310 L Street, NW., 6th floor, Washington, DC 20005 (express mail/courier); and Director, Air Enforcement Division (2242A), U.S. Environmental Protection Agency, Ariel Rios

Building, 1200 Pennsylvania Avenue, NW., Washington, DC 20460.

(b) *Criteria for a research and development exemption.* For a research and development exemption to be granted, the person requesting an exemption must—

(1) Demonstrate a purpose that constitutes an appropriate basis for exemption;

(2) Demonstrate that an exemption is necessary;

(3) Design a research and development program to be reasonable in scope; and

(4) Exercise a degree of control consistent with the purpose of the program and EPA's monitoring requirements.

(c) *Information required to be submitted.* To demonstrate each of the elements in paragraphs (b)(1) through (4) of this section, the person requesting an exemption must include the following information in the written request required under paragraph (a) of this section:

(1) A concise statement of the purpose of the program demonstrating that the program has an appropriate research and development purpose.

(2) An explanation of why the stated purpose of the program cannot be achieved in a practicable manner without performing one or more of the prohibited acts under this subpart.

(3) To demonstrate the reasonableness of the scope of the program:

(i) An estimate of the program's duration in time and, if appropriate, mileage;

(ii) An estimate of the maximum number of vehicles or engines involved in the program;

(iii) The manner in which the information on vehicles and engines used in the program will be recorded and made available to the Administrator upon request; and

(iv) The quantity of fuel which does not comply with the requirements of §§ 80.520 and 80.521 for motor vehicle diesel fuel, or § 80.510 for NRLM diesel fuel or ECA marine fuel.

(4) With regard to control, a demonstration that the program affords EPA a monitoring capability, including all the following:

(i) The site(s) of the program (including facility name, street address, city, county, State, and zip code).

(ii) The manner in which information on vehicles and engines used in the program will be recorded and made available to the Administrator upon request.

(iii) The manner in which information on the fuel used in the program (including quantity, fuel properties, name, address, telephone number and contact person of the supplier, and the date received from the supplier), will be recorded and made available to the Administrator upon request.

(iv) The manner in which the party will ensure that the research and development fuel will be segregated from motor vehicle diesel fuel, NRLM diesel fuel, or ECA marine fuel, as applicable, and how fuel pumps will be labeled to ensure proper use of the research and development fuel.

(v) The name, address, telephone number and title of the person(s) in the organization requesting an exemption from whom further information on the application may be obtained.

(vi) The name, address, telephone number and title of the person(s) in the organization requesting an exemption who is responsible for recording and making available the information specified in this paragraph (c), and the location where such information will be maintained.

(d) *Additional requirements.* (1) The product transfer documents associated with research and development motor vehicle diesel fuel must comply with requirements of § 80.590(b)(3).

(2) The research and development fuel must be designated by the refiner or supplier, as applicable, as research and development fuel.

(3) The research and development fuel must be kept segregated from non-exempt MVNRLM diesel fuel and ECA marine fuel at all points in the distribution system.

(4) The research and development fuel must not be sold, distributed, offered for sale or distribution, dispensed, supplied, offered for supply, transported to or from, or stored by a fuel retail outlet, or by a wholesale purchaser-consumer facility, unless the wholesale purchaser-consumer facility

is associated with the research and development program that uses the fuel.

(5) At the completion of the program, any emission control systems or elements of design which are damaged or rendered inoperative shall be replaced on vehicles remaining in service, or the responsible person will be liable for a violation of the Clean Air Act section 203(a)(3) (42 U.S.C. 7522 (a)(3)) unless sufficient evidence is supplied that the emission controls or elements of design were not damaged.

(e) *Mechanism for granting of an exemption.* A request for a research and development exemption will be deemed approved by the earlier of 60 days from the date on which EPA receives the request for exemption, (provided that EPA has not notified the applicant of potential disapproval by that time), or the date on which the applicant receives a written approval letter from EPA.

(1) The volume of fuel subject to the approval shall not exceed the estimated amount under paragraph (c)(3)(iv) of this section, unless EPA grants a greater amount in writing.

(2) Any exemption granted under this section will expire at the completion of the test program or three years from the date of approval, whichever occurs first, and may only be extended upon re-application consistent will all requirements of this section.

(3) The passage of 60 days will not signify the acceptance by EPA of the validity of the information in the request for an exemption. EPA may elect at any time to review the information contained in the request, and where appropriate may notify the responsible person of disapproval of the exemption.

(4) In granting an exemption the Administrator may include terms and conditions, including replacement of emission control devices or elements of design, that the Administrator determines are necessary for monitoring the exemption and for assuring that the purposes of this subpart are met.

(5) Any violation of a term or condition of the exemption, or of any requirement of this section, will cause the exemption to be void *ab initio*.

(6) If any information required under paragraph (c) of this section should change after approval of the exemption, the responsible person must notify EPA in writing immediately. Failure to do so may result in disapproval of the exemption or may make it void *ab initio*, and may make the party liable for a violation of this subpart.

(f) *Effects of exemption.* Motor vehicle diesel fuel, NRLM diesel fuel, or ECA marine fuel that is subject to a research and development exemption under this section is exempt from other provisions of this subpart provided that the fuel is used in a manner that complies with the purpose of the program under paragraph (c) of this section and the requirements of this section.

(g) *Notification of completion.* The party shall notify EPA in writing within 30 days after completion of the research and development program.

[69 FR 39202, June 29, 2004, as amended at 75 FR 22976, Apr. 30, 2010]

§ 80.608 What requirements apply to diesel fuel and ECA marine fuel for use in the Territories?

The sulfur standards of § 80.520(a)(1) and (c) related to motor vehicle diesel fuel, of § 80.510(a), (b), and (c) related to NRLM diesel fuel, and of § 80.510(k) related to ECA marine fuel, do not apply to fuel that is produced, imported, sold, offered for sale, supplied, offered for supply, stored, dispensed, or transported for use in the Territories of Guam, American Samoa or the Commonwealth of the Northern Mariana Islands, provided that such diesel fuel is all the following:

(a) Designated by the refiner or importer as high sulfur diesel fuel only for use in Guam, American Samoa, or the Commonwealth of the Northern Mariana Islands.

(b) Used only in Guam, American Samoa, or the Commonwealth of the Northern Mariana Islands.

(c) Accompanied by documentation that complies with the product transfer document requirements of § 80.590(b)(1).

(d) Segregated from non-exempt MVNRLM diesel fuel and/or non-exempt ECA marine fuel at all points in the distribution system from the point the fuel is designated as exempt fuel only for use in Guam, American Samoa, or the Commonwealth of the Northern Mariana Islands, while the

exempt fuel is in the United States (or the United States Emission Control Area) but outside these Territories.

[75 FR 22976, Apr. 30, 2010]

§ 80.609 [Reserved]

VIOLATION PROVISIONS

§ 80.610 What acts are prohibited under the diesel fuel sulfur program?

No person shall—

(a) *Standard, dye, marker or product violation.*

(1) Produce, import, sell, offer for sale, dispense, supply, offer for supply, store or transport motor vehicle diesel fuel, NRLM diesel fuel, ECA marine fuel or heating oil that does not comply with the applicable standards, dye, marking or any other product requirements under this subpart I and 40 CFR part 69, except as allowed by 40 CFR part 1043 for ECA marine fuel.

(2) Beginning June 1, 2007, produce, import, sell, offer for sale, dispense, supply, offer for supply, store or transport any diesel fuel for use in motor vehicle or nonroad engines that contains greater than 0.10 milligrams per liter of solvent yellow 124, except for 500 ppm sulfur diesel fuel produced or imported from June 1, 2010 through September 30, 2012 for use only in locomotive or marine diesel engines that is marked under the provisions of § 80.510(e).

(3) Beginning June 1, 2007, produce, import, sell, offer for sale, dispense, supply, offer for supply, store or transport heating oil for use in any nonroad diesel engine, including any locomotive or marine diesel engine.

(b) *Designation and volume balance violation.* Produce, import, sell, offer for sale, dispense, supply, offer for supply, store or transport motor vehicle diesel, NRLM diesel fuel, ECA marine fuel, heating oil or other fuel that does not comply with the applicable designation or volume balance requirements under §§ 80.598 and 80.599.

(c) *Additive violation.* (1) Produce, import, sell, offer for sale, dispense, supply, offer for supply, store or transport any fuel additive for use at a downstream location that does not comply with the applicable requirements of § 80.521.

(2) Blend or permit the blending into motor vehicle diesel fuel, NRLM diesel fuel, or ECA marine fuel at a downstream location, or use, or permit the use, in motor vehicle diesel fuel, NRLM diesel fuel, or ECA marine fuel, of any additive that does not comply with the applicable requirements of § 80.521.

(d) *Used motor oil violation.* Introduce into the fuel system of a model year 2007 or later diesel motor vehicle or model year 2011 or later nonroad diesel engine (except for locomotive or marine engines) or other nonroad diesel engine certified for the use of 15 ppm sulfur content fuel, or permit the introduction into the fuel system of such vehicle or nonroad engine of used motor oil, or used motor oil blended with diesel fuel, that does not comply with the requirements of § 80.522.

(e) *Improper fuel usage violation.* (1) Introduce, or permit the introduction of, fuel into model year 2007 or later diesel motor vehicles, and beginning December 1, 2010 into any diesel motor vehicle, that does not comply with the standards and dye requirements of § 80.520(a) and (b);

(2) Introduce, or permit the introduction of, fuel into any nonroad diesel engine (including any locomotive or marine diesel engine) that does not comply with the applicable standards, dye and marking requirements of § 80.510(a), (d), and (e) and § 80.520(b) beginning on the following dates:

(i) This prohibition begins December 1, 2007 in the areas specified in § 80.510(g)(1) and (g)(2), except as specified in paragraph (e)(2)(ii) of this section.

(ii) This prohibition begins December 1, 2010 in the area specified in § 80.510(g)(2) for NRLM diesel fuel that is produced in accordance with a compliance plan approved under § 80.554.

(iii) This prohibition begins December 1, 2010 in all other areas.

(3) Introduce, or permit the introduction of, fuel into any nonroad diesel engine (other than locomotive and marine diesel engines) that does not comply with the applicable standards, dye and marking requirements of § 80.510(b) and (e) beginning on the following dates:

(i) This prohibition begins December 1, 2010 in the areas specified in

§ 80.510(g)(1) and (g)(2), except as specified paragraph (e)(3)(ii) of this section.

(ii) This prohibition begins December 1, 2014 in the area specified in § 80.510(g)(2) for NRLM diesel fuel that is produced in accordance with a compliance plan approved under § 80.554.

(iii) This prohibition begins December 1, 2014, in all other areas.

(4) Introduce, or permit the introduction of, fuel into any locomotive and marine diesel engine which does not comply with the applicable standards, dye and marking requirements of § 80.510(c) and § 80.510(f) in the following areas beginning on the following dates:

(i) This prohibition begins December 1, 2012 in the areas specified in § 80.510(g)(1) and (g)(2), except as specified in paragraph (e)(4)(ii) of this section.

(ii) This prohibition does not apply in the area specified in § 80.510(g)(2) for NRLM diesel fuel that is produced in accordance with a compliance plan approved under § 80.554.

(iii) This prohibition begins December 1, 2014, in all other areas.

(5) Introduce, or permit the introduction of, fuel into any model year 2011 or later nonroad diesel engine certified for use on 15 ppm sulfur content fuel, diesel fuel which does not comply with the applicable standards, dye and marking requirements of § 80.510(b) through (f).

(6) Beginning January 1, 2015, introduce (or permit the introduction of) any fuel with a sulfur content greater than 1,000 ppm for use in a Category 3 marine vessel within an ECA, except as allowed by 40 CFR part 1043. This prohibition is in addition to other prohibitions in this section.

(f) *Cause another party to violate.* Cause another person to commit an act in violation of paragraphs (a) through (e) of this section.

(g) *Cause violating fuel or additive to be in the distribution system.* Cause motor vehicle diesel fuel, NRLM diesel fuel, or ECA marine fuel to be in the diesel fuel distribution system which does not comply with the applicable standard, dye or marker requirements or the product segregation requirements of this subpart I, or cause any fuel additive to be in the fuel additive distribution system which does not comply with the applicable sulfur standards under § 80.521.

[69 FR 39203, June 29, 2004, as amended at 75 FR 22976, Apr. 30, 2010]

§ 80.611 What evidence may be used to determine compliance with the prohibitions and requirements of this subpart and liability for violations of this subpart?

(a) *Compliance with sulfur, cetane, and aromatics standards, dye and marker requirements.* Compliance with the standards, dye, and marker requirements in §§ 80.510, 80.511, 80.520, and 80.521 shall be determined based on the level of the applicable component or parameter, using the sampling methodologies specified in § 80.330(b), as applicable, and an approved testing methodology under the provisions of §§ 80.580 through 80.586 for sulfur; § 80.2(w) for cetane index; § 80.2(z) for aromatic content; and § 80.582 for fuel marker. Any evidence or information, including the exclusive use of such evidence or information, may be used to establish the level of the applicable component or parameter in the diesel fuel or additive, or motor oil to be used in diesel fuel, if the evidence or information is relevant to whether that level would have been in compliance with the standard if the regulatory sampling and testing methodology had been correctly performed. Such evidence may be obtained from any source or location and may include, but is not limited to, test results using methods other than the compliance methods in this paragraph (a), business records, and commercial documents.

(b) *Compliance with other requirements.* Determination of compliance with the requirements and prohibitions of this subpart other than the standards described in paragraph (a) of this section and in §§ 80.510, 80.511, 80.520, and 80.521, and determination of liability for any violation of this subpart, may be based on information obtained from any source or location. Such information may include, but is not limited to, business records and commercial documents.

[69 FR 39204, June 29, 2004]

§ 80.612 Who is liable for violations of this subpart?

(a) *Persons liable for violations of prohibited acts*—(1) *Standard, dye, marker, additives, used motor oil, heating oil, fuel introduction, and other product requirement violations.* (i) Any refiner, importer, distributor, reseller, carrier, retailer, wholesale purchaser-consumer who owned, leased, operated, controlled or supervised a facility where a violation of any provision of § 80.610(a) through (e) occurred, or any other person who violates any provision of § 80.610(a) through (e), is deemed liable for the applicable violation, except that distributors who receive diesel fuel or distillate from the point where it is taxed, dyed or marked, and retailers and wholesale purchaser-consumers are not deemed liable for any violation of § 80.610(b).

(ii) Any person who causes another person to violate § 80.610(a) through (e) is liable for a violation of § 80.610(f).

(iii) Any refiner, importer, distributor, reseller, carrier, retailer, or wholesale purchaser-consumer who produced, imported, sold, offered for sale, dispensed, supplied, offered to supply, stored, transported, or caused the transportation or storage of, diesel fuel or distillate that violates § 80.610(a), is deemed in violation of § 80.610(f).

(iv) Any person who produced, imported, sold, offered for sale, dispensed, supplied, offered to supply, stored, transported, or caused the transportation or storage of a diesel fuel additive which is used in motor vehicle diesel fuel or NRLM diesel fuel that is found to violate § 80.610(a), is deemed in violation of § 80.610(f).

(2) *Cause violating diesel fuel or additive to be in the distribution system.* Any refiner, importer, distributor, reseller, carrier, retailer, or wholesale purchaser-consumer or any other person who owned, leased, operated, controlled or supervised a facility from which distillate fuel or additive was released into the distribution system which does not comply with the applicable standards, marking or dye requirements of this Subpart I is deemed in violation of § 80.610(g).

(3) *Branded refiner/importer liability.* Any refiner or importer whose corporate, trade, or brand name, or whose marketing subsidiary's corporate, trade, or brand name appeared at a facility where a violation of § 80.610(a) or (b) occurred, is deemed in violation of § 80.610(a) or (b), as applicable.

(4) *Carrier causation.* In order for a distillate fuel or diesel fuel additive carrier to be liable under paragraph (a)(1)(ii), (a)(1)(iii), or (a)(1)(iv) of this section, as applicable, EPA must demonstrate, by reasonably specific showing by direct or circumstantial evidence, that the carrier caused the violation.

(5) *Parent corporation.* Any parent corporation is liable for any violations of this subpart that are committed by any subsidiary.

(6) *Joint venture.* Each partner to a joint venture is jointly and severally liable for any violation of this subpart that occurs at the joint venture facility or is committed by the joint venture operation.

(b) *Persons liable for failure to comply with other provisions of this subpart.* Any person who:

(1) Fails to comply with the requirements of a provision of this subpart not addressed in paragraph (a) of this section is liable for a violation of that provision; or

(2) Causes another person to fail to comply with the requirements of a provision of this subpart not addressed in paragraph (a) of this section, is liable for causing a violation of that provision.

[66 FR 5136, Jan. 18, 2001, as amended at 69 FR 39204, June 29, 2004; 75 FR 22977, Apr. 30, 2010]

§ 80.613 What defenses apply to persons deemed liable for a violation of a prohibited act under this subpart?

(a) *Presumptive liability defenses.* (1) Any person deemed liable for a violation of a prohibition under § 80.612(a)(1)(i), (a)(1)(iii), (a)(2), or (a)(3), will not be deemed in violation if the person demonstrates all of the following, as applicable:

(i) The violation was not caused by the person or the person's employee or agent;

(ii) Product transfer documents account for fuel or additive found to be in

violation and indicate that the violating product was in compliance with the applicable requirements when it was under the person's control;

(iii) The person conducted a quality assurance sampling and testing program, as described in paragraph (d) of this section, except for those persons subject to the provisions of paragraph (a)(1)(iv), (a)(1)(v), or (a)(1)(vi) of this section or § 80.614. A carrier may rely on the quality assurance program carried out by another party, including the party who owns the diesel fuel in question, provided that the quality assurance program is carried out properly. Retailers, wholesale purchaser-consumers, and ultimate consumers of diesel fuel are not required to conduct quality assurance programs;

(iv) For refiners and importers of diesel fuel subject to the 15 ppm sulfur standard under § 80.510(b) or (c) or § 80.520(a)(1), the 500 ppm sulfur standard under § 80.510(a) or § 80.520(c), and/or the 1,000 ppm sulfur standard under § 80.510(k), test results that—

(A) Were conducted according to an appropriate test methodology approved or designated under §§ 80.580 through 80.586, 80.2(w), or 80.2(z), as appropriate; and

(B) Establish that, when it left the party's control, the fuel did not violate the sulfur, cetane or aromatics standard, or the dye or marking provisions of §§ 80.510 or 80.511, as applicable;

(v) For any truck loading terminal or any other person who delivers heating oil for delivery to the ultimate consumer and is subject to the requirement to mark heating oil or LM diesel fuel under § 80.510(d) through (f), data which demonstrates that when it left the truck loading terminal or other facility, the concentration of marker solvent yellow 124 was equal to or greater than six milligrams per liter. In lieu of testing for marker solvent yellow 124 concentration, evidence may be presented of an oversight program, including records of marker inventory, purchase and additization, and records of periodic inspection and calibration of additization equipment that ensures that marker is added to heating oil or LM diesel fuel, as applicable, under § 80.510(d) through (f) in the required concentration;

(vi) Except as provided in § 80.614, for any person who, at a downstream location, blends a diesel fuel additive subject to the requirements of § 80.521(b) into motor vehicle diesel fuel or NRLM diesel fuel subject to the 15 ppm sulfur standard under § 80.520(a) or § 80.510(b) or (c), except a person who blends additives into fuel tanker trucks at a truck loading rack subject to the provisions of paragraph (d)(2) of this section, test results which are conducted subsequent to the blending of the additive into the fuel, and which comply with the requirements of paragraphs (a)(1)(iv)(A) and (B) of this section; and

(vii) Any person deemed liable for a designation or volume balance provisions violation under § 80.610(b) and 80.612(a) will not be deemed in violation if the person demonstrates, through product transfer documents, records, reports and other evidence that the diesel fuel or distillate was properly designated and volume balance requirements were met.

(2) Any person deemed liable for a violation under § 80.612(a)(1)(iv), in regard to a diesel fuel additive subject to the requirements of § 80.521(a), will not be deemed in violation if the person demonstrates that—

(i) Product transfer document(s) account for the additive in the fuel found to be in violation, which comply with the requirements under § 80.591(a), and indicate that the additive was in compliance with the applicable requirements while it was under the party's control; and

(ii) For the additive's manufacturer or importer, test results which accurately establish that, when it left the party's control, the additive in the diesel fuel determined to be in violation did not have a sulfur content greater than or equal to 15 ppm.

(A) Analysis of the additive sulfur content pursuant to this paragraph (a)(2) may be conducted at the time the batch was manufactured or imported, or on a sample of that batch which the manufacturer or importer retains for such purpose for a minimum of two years from the date the batch was manufactured or imported.

(B) After two years from the date the additive batch was manufactured or imported, the additive manufacturer or

importer is no longer required to retain samples for the purpose of complying with the testing requirements of this paragraph (a)(2).

(C) The analysis of the sulfur content of the additive must be conducted pursuant to the requirements of § 80.580.

(3) Any person who is deemed liable for a violation under § 80.612(a)(1)(iv) with regard to a diesel fuel additive subject to the requirements of § 80.521(b), will not be deemed in violation if the person demonstrates that—

(i) The violation was not caused by the party or the party's employee or agent;

(ii) Product transfer document(s) which comply with the additive information requirements under § 80.591(b), account for the additive in the fuel found to be in violation, and indicate that the additive was in compliance with the applicable requirements while it was under the party's control; and

(iii) For the additive's manufacturer or importer, test results which accurately establish that, when it left the party's control, the additive in the diesel fuel determined to be in violation was in conformity with the information on the additive product transfer document pursuant to the requirements of § 80.591(b). The testing procedures applicable under paragraph (a)(2) of this section, also apply under this paragraph (a)(3).

(b) *Branded refiner defenses.* In the case of a violation found at a facility operating under the corporate, trade or brand name of a refiner or importer, or a refiner's or importer's marketing subsidiary, the refiner or importer must show, in addition to the defense elements required under paragraph (a)(1) of this section, that the violation was caused by:

(1) An act in violation of law (other than the Clean Air Act or this Part 80), or an act of sabotage or vandalism;

(2) The action of any refiner, importer, retailer, distributor, reseller, oxygenate blender, carrier, retailer or wholesale purchaser-consumer in violation of a contractual agreement between the branded refiner or importer and the person designed to prevent such action, and despite periodic sampling and testing by the branded refiner or importer to ensure compliance with such contractual obligation; or

(3) The action of any carrier or other distributor not subject to a contract with the refiner or importer, but engaged for transportation of diesel fuel, despite specifications or inspections of procedures and equipment which are reasonably calculated to prevent such action.

(c) *Causation demonstration.* Under paragraph (a)(1) of this section for any person to show that a violation was not caused by that person, or under paragraph (b) of this section to show that a violation was caused by any of the specified actions, the person must demonstrate by reasonably specific showing, by direct or circumstantial evidence, that the violation was caused or must have been caused by another person and that the person asserting the defense did not contribute to that other person's causation.

(d) *Quality assurance and testing program.* To demonstrate an acceptable quality assurance program under paragraph (a)(1)(iii) of this section, a person must present evidence of the following:

(1) A periodic sampling and testing program to ensure the diesel fuel or additive the person sold, dispensed, supplied, stored, or transported, meets the applicable standards and requirements, including the requirements relating to the presence of marker solvent yellow 124.

(2) For those parties who, at a downstream location, blend diesel fuel additives subject to the requirements of § 80.521(b) into fuel trucks at a truck loading rack, the periodic sampling and testing program required under this paragraph (d) must ensure, by taking into account the greater risk of noncompliance created through use of a high sulfur additive, that the diesel fuel into which the additive was blended meets the applicable standards subsequent to the blending.

(3) On each occasion when diesel fuel or additive is found not in compliance with the applicable standard:

(i) The person immediately ceases selling, offering for sale, dispensing, supplying, offering for supply, storing or transporting the non-complying product.

(ii) The person promptly remedies the violation and the factors that caused the violation (for example, by removing the non-complying product from the distribution system until the applicable standard is achieved and taking steps to prevent future violations of a similar nature from occurring).

(4) For any carrier who transports diesel fuel or additive in a tank truck, the quality assurance program required under this paragraph (d) need not include its own periodic sampling and testing of the diesel fuel or additive in the tank truck, but in lieu of such tank truck sampling and testing, the carrier shall demonstrate evidence of an oversight program for monitoring compliance with the requirements of this subpart relating to the transport or storage of such product by tank truck, such as appropriate guidance to drivers regarding compliance with the applicable sulfur standard, product segregation and product transfer document requirements, and the periodic review of records received in the ordinary course of business concerning diesel fuel or additive quality and delivery.

[66 FR 5136, Jan. 18, 2001, as amended at 69 FR 39204, June 29, 2004; 70 FR 40899, July 15, 2005; 75 FR 22977, Apr. 30, 2010]

EFFECTIVE DATE NOTE: At 75 FR 26127, May 11, 2010, § 80.613 was amended by adding paragraph (e), effective July 12, 2010. For the convenience of the user, the added text is set forth as follows:

§ 80.613 What defenses apply to persons deemed liable for a violation of a prohibited act under this subpart?

* * * * *

(e) *Alternative defense requirements.* A person deemed liable under § 80.612(a) for a violation of § 80.610(a)(1), concerning diesel fuel that is sold, offered for sale, or dispensed at a retail outlet and that does not meet the applicable sulfur content standard under § 80.520(a)(1), as adjusted under § 80.580(d), may comply with the following alternative defense requirements in lieu of the requirements in paragraphs (a) through (d) of this section to the extent provided for, and subject to the conditions and limitations set forth in this paragraph (e):

(1) *Independent survey association.* To comply with the alternative defense requirements under this paragraph (e), a person must participate in the funding of a consortium which arranges to have an independent survey association conduct a statistically valid program of annual compliance surveys pursuant to a survey plan which has been approved by EPA, in accordance with the requirements of paragraphs (e)(2) through (e)(4) of this section.

(2) *General requirements.* The consortium survey program under this paragraph (e) must be:

(i) Planned and conducted by an independent survey association that meets the requirements in § 80.68(c)(13)(i);

(ii) Conducted at diesel fuel retail outlets nationwide; and

(iii) Representative of all motor vehicle diesel fuel subject to the 15 ppm sulfur standard under § 80.520(a)(1) dispensed at diesel fuel retail outlets nationwide.

(3) *Independent survey association requirements.* The consortium described in paragraph (e)(1) of this section shall require the independent survey association conducting the surveys to:

(i) Submit to EPA for approval each calendar year a proposed survey plan in accordance with the requirements of paragraph (e)(4) of this section.

(ii) Obtain samples of motor vehicle diesel fuel subject to the 15 ppm sulfur standard under § 80.520(a)(1) in accordance with the survey plan approved under this paragraph (e), or immediately notify EPA of any refusal of retail outlets to allow samples to be taken;

(iii) Test, or arrange to be tested, the samples required under paragraph (e)(3)(ii) of this section for sulfur content as follows—

(A) Samples collected at retail outlets shall be shipped the same day the samples are collected via overnight service to the laboratory, and analyzed for sulfur content within twenty-four hours after receipt of the sample in the laboratory.

(B) Any laboratory to be used by the independent survey association for sulfur testing shall be approved by EPA and its sulfur test method shall comply with the provisions of §§ 80.584, 80.585 and 80.586.

(C) For purposes of the alternative defense requirements in this paragraph (e), test results shall be rounded to a whole number using ASTM E 29–02$^{\epsilon 1}$, Standard Practice for Using Significant Digits in Test Data to Determine Conformance with Specifications, rounding method procedures. The Director of the Federal Register approved the incorporation by reference of ASTM E 29–02$^{\epsilon 1}$ as prescribed in 5 U.S.C. 552(a) and 1 CFR part 51. Anyone may purchase copies of this standard from ASTM International, 100 Barr Harbor Dr., West Conshohocken, PA 19428, (610) 832–9585. Anyone may inspect copies at the U.S. EPA, EPA Docket Center, Room 3334, EPA West Building, 1301 Constitution Ave., NW., Washington, DC 20460, (202) 566–9744, or at the

National Archives and Records Administration (NARA). For information on the availability of this material at NARA, call 202–741–6030, or go to: *http://www.archives.gov/federal-register/cfr/ibr-locations.html.*

(iv) Provide notice of samples with sulfur content greater than the 15 ppm standard under § 80.520(a)(1), as adjusted under § 80.580(d), as follows:

(A) In the case of any test result that is one or two ppm greater than the 15 ppm standard under § 80.520(a)(1), as adjusted under § 80.580(d), the independent survey association shall, within twenty-four hours after the laboratory receives the sample, send notification of the test result as follows: In the case of a sample collected at a retail outlet at which the brand name of a refiner or importer is displayed, to the refiner or importer, and EPA; and in the case of a sample collected at other retail outlets, to the retailer and EPA. This initial notification to a refiner shall include specific information concerning the name and address of the retail outlet, contact information, the brand, and the sulfur content of the sample.

(B) In the case of any test result that is three or more ppm greater than the 15 ppm standard under § 80.520(a)(1), as adjusted under § 80.580(d), or for a test result that is one or two ppm greater than the 15 ppm standard under § 80.520(a)(1), as adjusted under § 80.580(d), and the retail outlet has had an exceedance within the previous two years, the independent survey association shall, within the time limits specified in paragraph (e)(3)(iv)(A) of this section, provide notice to the parties described in paragraph (e)(3)(iv)(A) of this section. The notice to EPA must include the name and address of the retail outlet, and the telephone number, if known.

(C) The independent survey association shall provide notice to the identified contact person or persons for each party specified in paragraphs (e)(3)(iv)(A) and (B) of this section in writing (*e.g.* e-mail or facsimile) and, if requested by the identified contact person, by telephone.

(v) Provide to EPA quarterly and annual summary survey reports which include the information specified in paragraph (e)(8) of this section.

(vi) Maintain all records relating to the surveys conducted under this paragraph (e) for a period of at least 5 years.

(vii) At any time permit any representative of EPA to monitor the conduct of the surveys, including sample collection, transportation, storage, and analysis.

(4) *Survey plan design requirements.* The proposed survey plan required under paragraph (e)(3)(i) of this section shall, at a minimum, include the following:

(i) *Number of surveys.* The survey plan shall include four surveys each calendar year. The four surveys collectively are called the survey series.

(ii) *Sampling areas.* The survey plan shall include sampling in three types of areas, called sampling strata, during each survey: Densely populated areas, transportation corridors and rural areas. These sampling strata shall be further divided into discrete sampling areas, or clusters. Each survey shall include sampling in at least 40 sampling areas in each stratum, randomly selected.

(iii) *No advance notice of surveys.* The survey plan shall include procedures to keep confidential from any regulated party, but not from EPA, the identification of the sampling areas that are included in any survey plan prior to the beginning of a survey in an area.

(iv) *Retail outlet selection.*

(A) The retail outlets to be sampled in a sampling area shall be selected from among all retail outlets in the sampling area that sell motor vehicle diesel fuel subject to the 15 ppm sulfur standard under § 80.520(a)(1), with probability of selection proportionate to the volume of motor vehicle diesel fuel subject to the 15 ppm sulfur standard under § 80.520(a)(1) sold at the retail outlets, and inclusion of retail outlets with different brand names and unbranded, if possible.

(B) In the case of any retail outlet from which a sample of motor vehicle diesel fuel subject to the 15 ppm sulfur standard under § 80.520(a)(1) was collected during a survey and determined to have a sulfur content that exceeds the 15 ppm sulfur standard under § 80.520(a)(1), as adjusted under § 80.580(d), that retail outlet shall be included in the subsequent survey.

(C) Only a single sample shall be collected at each retail outlet, except that where a retail outlet had a sample from the preceding survey with a test result that exceeds the 15 ppm standard under § 80.520(a)(1), as adjusted under § 80.580(d), separate samples shall be taken that represent the diesel fuel contained in each storage tank containing motor vehicle diesel fuel subject to the 15 ppm sulfur standard under § 80.520(a)(1), unless collection of separate samples is not practicable (for example, due to diesel piping arrangements or pump outages).

(v) *Number of samples.*

(A) The minimum number of samples to be included in the survey plan for each calendar year shall be calculated as follows:

$$n = \left\{ \left[\left(Z_\alpha + Z_\beta \right) \right]^2 \Big/ \left(4 * \left[arc\ \sin\left(\sqrt{\phi_1} \right) - arc\ \sin\left(\sqrt{\phi_0} \right) \right]^2 \right) \right\} * St_n * F_a * F_b * Su_n$$

Where:

n = minimum number of samples in a year-long survey series. However, in no case shall n be larger than 9,600 or smaller than 5,250.

Z_α = upper percentile point from the normal distribution to achieve a one-tailed 95% confidence level (5% α-level). Thus, Z_α equals 1.645.

Z_β = upper percentile point to achieve 95% power. Thus, Z_β equals 1.645.

φ_1 = the maximum proportion of stations selling non-compliant fuel for the fuel in a region to be deemed compliant. In this test, the parameter needs to be 5% or greater, i.e., 5% or more of the stations, within a stratum such that the region is considered non-compliant. For this survey, φ_1 will be 5%.

φ_o = the underlying proportion of non-compliant stations in a sample. For calendar year 2011, $\varphi_o$will be 1.9%. For calendar years 2012 and beyond, φ_o will be the average of the proportion of stations to be non-compliant over the previous four surveys.

St_n = number of sampling strata. For purposes of this survey program, St_n equals 3.

F_a = adjustment factor for the number of extra samples required to compensate for collected samples that cannot be included in the survey, based on the number of additional samples required during the previous four surveys. However, in no case shall the value of F_a be smaller than 1.1. For purposes of this adjustment factor, a sample shall be treated as one that can be included in the survey only if the fuel was offered for sale as motor vehicle diesel fuel subject to the 15 ppm sulfur standard under § 80.520(a)(1) at the retail outlet where the sample was collected and if an appropriate laboratory analysis of this fuel is conducted.

F_b = adjustment factor for the number of samples required to resample each retail outlet with test results greater than 17 ppm (resampling), based on the rate of resampling required during the previous four surveys. However, in no case shall the value of F_b be smaller than 1.1.

Su_n = number of surveys per year. For purposes of this survey program, Su_n equals 4.

(B) The number of samples obtained from the formula in paragraph (e)(4)(v)(A) of this section, after being incremented as necessary to allocate whole numbers of samples to each cluster, shall be distributed approximately equally for the surveys conducted during the calendar year. Within a survey, the samples shall be divided approximately equally for the three strata.

(5) *Sulfur test result that is one or two ppm Greater than the 15 ppm standard under § 80.520(a)(1), as adjusted under § 80.580(d).* The following provisions apply if the tested sulfur level of a diesel fuel sample collected by the independent survey association is one or two ppm greater than the 15 ppm standard under § 80.520(a)(1), as adjusted under § 80.580(d).

(i) *Branded refiner or importer.* Where the sample was collected at a retail outlet at which the brand name of a refiner or importer is displayed, the branded refiner or importer will be deemed to have established its defense under this section, provided that the refiner or importer participates in a consortium as described in paragraph (e)(1) of this section, and provided that the refiner or importer also demonstrates the following:

(A) The sulfur content of the diesel fuel at the terminal(s) that most recently supplied the retail outlet was no greater than 15 ppm prior to adjustment under § 80.580(d) when dispensed for delivery to the retail outlet;

(B) Best efforts and accepted business practices are used by parties downstream from the refiner or importer to avoid diesel fuel contamination. These would include, for example, procedures for ensuring motor vehicle diesel fuel subject to the 15 ppm sulfur standard under § 80.520(a)(1) is not contaminated in delivery trucks, and procedures for ensuring delivery truck drivers can identify retail outlet drop points for motor vehicle diesel fuel subject to the 15 ppm sulfur standard under § 80.520(a)(1).

(C) Upon receiving the notification required under paragraph (e)(3)(iv)(A) of this section, any pumps supplied by the retail storage tank where the noncompliant diesel fuel was found were shutdown until such time that the fuel at issue was retested and the sulfur content of the fuel was found to be no greater than the 15 ppm standard under § 80.520(a)(1), as adjusted under § 80.580(d). Prior to May 31, 2010, as an alternative to shutting down pumps supplied by the retail storage tank where the noncompliant diesel fuel was found, such pumps may be relabeled with the language required under § 80.571(b). The steps required in this paragraph (e)(5)(i)(C) must be taken as soon as practicable after receiving the notification required under paragraph (e)(3)(iv)(A) of this section, which normally will be within the same business day, but no longer than twenty-four hours after notification is received unless the refiner or importer demonstrates this timing is not possible.

(D) A root cause analysis is performed to determine the cause of the noncompliant diesel fuel and appropriate actions are taken to prevent future violations.

(E) The independent survey association samples and retests the diesel fuel at the retail outlet during its next survey, in addition to the scheduled sampling and testing under the approved survey program.

(F) The refiner or importer submits a report to EPA no later than 120 days following the date the sample was collected at the retail outlet, which includes the information specified in paragraph (e)(7) of this section.

(G) The refiner or importer supplies EPA with copies of the contracts with downstream parties specified in § 80.613(b)(2) or the specifications or inspections of procedures and equipment described in § 80.613(b)(3), as appropriate, which are designed to prevent the contamination of motor vehicle diesel fuel subject to the 15 ppm sulfur standard under § 80.520(a)(1).

(ii) *Unbranded refiner or importer*. Any unbranded refiner or importer that is deemed liable under § 80.612(a) for a violation of § 80.610(a)(1), concerning diesel fuel that is sold, offered for sale, or dispensed at a retail outlet and that does not meet the applicable sulfur content standard under § 80.520(a)(1), as adjusted under § 80.580(d), will be deemed to have established its defense under this section if the unbranded refiner or importer is a member of the consortium described in paragraph (e)(1) of this section and the refiner or importer meets the requirements of paragraphs (e)(5)(i)(A) through (F) of this section.

(iii) *Distributor or retailer*. Any distributor (*e.g.*, pipeline, terminal operator, marketer, truck carrier) or retailer that is deemed liable under § 80.612(a) for a violation of § 80.610(a)(1), concerning diesel fuel that is sold, offered for sale, or dispensed at a retail outlet and that does not meet the applicable sulfur content standard under § 80.520(a)(1), as adjusted under § 80.580(d), will be deemed to have established its defense under this section, provided that, within two years prior to the time the diesel fuel sample was collected by the independent survey association, the retail outlet had no instances where the tested sulfur level of a diesel fuel sample was greater than the 15 ppm standard under § 80.520(a)(1), as adjusted under § 80.580(d); and

(A) Where the retailer displays the brand name of a refiner or importer, the requirements in paragraphs (e)(5)(i) of this section are met by the branded refiner or importer; or

(B) Where the branded refiner or importer has elected not to participate in a consortium as described in paragraph (e)(1) of this section, or where the retailer does not display the brand name of a refiner or importer, the distributor or retailer is a member of the consortium described in paragraph (e)(1) of this section and the distributor or retailer meets the requirements in paragraphs (e)(5)(i)(A) through (F) of this section.

(C) If within two years prior to the time the diesel fuel sample was collected by the independent survey association, the retail outlet had an instance where the tested sulfur level of a diesel fuel sample was greater than the 15 ppm standard under § 80.520(a)(1), as adjusted under § 80.580(d), any distributor or retailer that is deemed liable for a violation under § 80.612 will be deemed to have established its defense under this section if the party meets the requirements under paragraph (e)(5)(iii)(A) or (B) of this section (in lieu of the requirement in paragraph (a)(1)(iii) of this section), and the party meets the requirements under paragraphs (a)(1)(i), (a)(1)(ii), and (c) of this section.

(6) *Sulfur test result that is three or more ppm Greater than the 15 ppm standard under § 80.520(a)(1), as adjusted under § 80.580(d)*. The following provisions apply if the tested sulfur level of a diesel fuel sample collected by the independent survey association is three or more ppm greater than the 15 ppm standard under § 80.520(a)(1), as adjusted under § 80.580(d):

(i) *Branded refiner or importer*. Any branded refiner or importer that is deemed liable under § 80.612(a) for a violation of § 80.610(a)(1), concerning diesel fuel that is sold, offered for sale, or dispensed at a retail outlet and that does not meet the applicable sulfur content standard under § 80.520(a)(1), as adjusted under § 80.580(d), will be deemed to have established its defense under this section if the refiner or importer meets the requirements under paragraph (e)(5)(i) of this section and meets the requirements under paragraphs (a)(1)(i), (a)(1)(ii), (b)(1), (b)(2), (b)(3), and (c) of this section.

(ii) *Unbranded refiner or importer*. Any unbranded refiner or importer that is deemed liable under § 80.612(a) for a violation of § 80.610(a)(1), concerning diesel fuel that is sold, offered for sale, or dispensed at a retail outlet and that does not meet the applicable sulfur content standard under § 80.520(a)(1), as adjusted under § 80.580(d), will be deemed to have established its defense under this section if the refiner or importer meets the requirements under paragraph (e)(5)(ii) of this section and meets the requirements under paragraphs (a)(1)(i), (a)(1)(ii), (a)(1)(iv), and (c) of this section.

(iii) *Distributor or retailer*. Any distributor or retailer that is deemed liable under § 80.612(a) for a violation of § 80.610(a)(1), concerning diesel fuel that is sold, offered for sale, or dispensed at a retail outlet and that does not meet the applicable sulfur content standard under § 80.520(a)(1), as adjusted under § 80.580(d), will be deemed to have established its defense under this section if the requirements under paragraph (e)(5)(iii)(A)

or (B) of this section, as appropriate, are met, and the distributor or retailer meets the requirements under paragraphs (a)(1)(i), (a)(1)(ii), and (c) of this section. Distributors that blend a diesel fuel additive subject to the requirements of § 80.521(b) into motor vehicle diesel fuel subject to the 15 ppm sulfur standard under § 80.520(a) must also meet the requirement under paragraph (a)(1)(iv) of this section.

(7) *Report regarding motor vehicle diesel fuel subject to the 15 ppm sulfur standard under § 80.520(a)(1) with high sulfur content.* The report that is required to be submitted to EPA under paragraph (e)(5)(i)(F) of this section shall contain the following information:

(i) The name, address and contact information for the regulated party submitting the report;

(ii) The name, address and contact information for the retail outlet where the high sulfur diesel fuel was found;

(iii) The brand name of the refiner or importer displayed at the retail outlet, if any;

(iv) The date of sampling, the analysis results, and the label that appeared on the pump where the sample was collected.

(v) For each of the most recent three deliveries (*i.e.,* the three deliveries that immediately preceded the taking of the violating sample) of diesel fuel to the retail outlet storage tank at issue, or the most recent five deliveries if the cause of the violation is not demonstrated following analysis of the most recent three deliveries:

(A) A copy of the product transfer documents for the delivery;

(B) The name, address and contact information for the terminal and truck distributor that supplied the diesel fuel;

(C) The date of delivery and the volume of diesel fuel delivered;

(D) The designation of the diesel fuel on the product transfer document;

(E) The test results (or other evidence of the diesel sulfur content) for the diesel fuel in the terminal tank from which the delivery truck was loaded, and copies of the test result reports; and

(F) A description of the procedures used by the truck distributor to avoid diesel contamination (*e.g.,* dedicated trucks).

(vi) A description of any actions taken to prevent sale of the noncompliant diesel fuel, including:

(A) The date and time the regulated party was notified of the high sulfur test result, the date and time the retailer was notified, and the date and time the sale of motor vehicle diesel fuel subject to the 15 ppm sulfur standard under § 80.520(a)(1) was suspended;

(B) A description of the actions taken to prevent sale of the noncompliant diesel fuel; and

(C) The date and time that sales of motor vehicle diesel fuel subject to the 15 ppm sulfur standard under § 80.520(a)(1) from the retail storage tank at issue were resumed, the results of the test used to establish the fuel met applicable standards, and a copy of the test result report.

(vii) A description of the root-cause analysis required in paragraph (e)(5)(i)(D) of this section, including:

(A) A description of the investigation conducted to determine the root-cause of the noncompliant diesel fuel, and the conclusions reached as a result of this investigation; and

(B) A description of the steps taken to prevent future problems from the identified cause.

(8) *Summary survey reports.* The quarterly and annual summary survey reports required under paragraph (e)(3)(v) of this section shall include the following information:

(i) The identification of each sampling area included in a survey and the dates that the samples were collected in that area;

(ii) For each retail outlet sampled:

(A) The identification of the retail outlet;

(B) The refiner or importer brand name displayed, if any;

(C) The pump labeling; and

(D) The sample test result.

(iii) Sulfur level summary statistics by brand and unbranded for each sampling area, strata, survey and annual survey series. These summary statistics shall:

(A) Include the number of samples, and the average, median and range of sulfur levels; and

(B) Be provided separately for the diesel fuel samples from pumps labeled as dispensing motor vehicle diesel fuel subject to the 15 ppm sulfur standard under § 80.520(a)(1), motor vehicle diesel fuel subject to the 500 ppm sulfur standard under § 80.520(c), and pumps that are not labeled.

(iv) The quarterly reports required under this paragraph (e)(8) are due sixty days following the end of the quarter. The annual reports required under this paragraph (e)(8) are due sixty days following the end of the calendar year.

(v) The reports required under this paragraph (e)(8) shall be submitted to EPA in both electronic spreadsheet and hard copy form.

(9) *EPA inspections.* If EPA inspects any facility and determines that the sulfur content of diesel fuel exceeds the 15 ppm standard under § 80.520(a)(1), as adjusted under § 80.580(d), liability for such sulfur content violation under § 80.612 will be treated as provided in paragraph (e)(6) of this section for branded refiners or distributors that participate in the consortium under this paragraph (e). Any other party deemed liable for a violation under § 80.612 must establish a defense under paragraphs (a) through (d) of this section, as applicable.

(10) *Procedures for obtaining approval of survey plan.* The procedure for obtaining EPA

approval of a survey plan under this paragraph (e), and for revocation of such approval, is as follows:

(i) A survey plan that complies with the requirements of this paragraph (e) must be submitted to EPA no later than November 1 of the year preceding the calendar year in which the surveys will be conducted;

(ii) The survey plan must be signed by a responsible officer of the consortium which arranges to have an independent surveyor conduct the survey program;

(iii) The survey plan must be sent to the following address: Director, Compliance and Innovative Strategies Division, U.S. Environmental Protection Agency, 1200 Pennsylvania Ave., NW. Mail Code 6506J, Washington, DC 20460;

(iv) EPA will send a letter to the party submitting a survey plan under this section, either approving or disapproving the survey plan;

(v) EPA may revoke any approval of a survey plan under this section for cause, including an EPA determination that the approved survey plan has proved to be inadequate in practice or that it was not diligently implemented;

(vi) The approving official for a survey plan under this section is the Director of the Compliance and Innovative Strategies Division, Office of Transportation and Air Quality.

(vii) Any notifications or reports required to be submitted to EPA under this paragraph (e) must be directed to the official designated in paragraph (e)(10)(vi) of this section.

(11) *Independent surveyor contract.* (i) No later than December 1 of the year preceding the year in which the surveys will be conducted, the contract with the independent surveyor shall be in effect, and an amount of money necessary to carry out the entire survey plan shall be paid to the independent surveyor or placed into an escrow account with instructions to the escrow agent to pay the money to the independent surveyor during the course of the conduct of the survey plan.

(ii) No later than December 15 of the year preceding the year in which the surveys will be conducted, EPA must receive a copy of the contract with the independent surveyor, proof that the money necessary to carry out the survey plan has either been paid to the independent surveyor or placed into an escrow account, and, if placed into an escrow account, a copy of the escrow agreement, to be sent to the official designated in paragraph (e)(10)(vi) of this section.

(12) *Failure to fulfill requirements.* A failure to fulfill or cause to be fulfilled any of the requirements of this paragraph (e) will cause the option to use the alternative quality assurance requirement under this paragraph (e) to be void *ab initio*.

§ 80.614 What are the alternative defense requirements in lieu of § 80.613(a)(1)(vi)?

Any person who blends a MVNRLM diesel fuel additive package into MVNRLM diesel fuel subject to the 15 ppm sulfur standards of § 80.510(b) or (c) or § 80.520(a) which contains a static dissipater additive that has a sulfur content greater than 15 ppm but whose contribution to the sulfur content of the MVNRLM diesel fuel is less than 0.4 ppm at its maximum recommended concentration, and/or red dye that has a sulfur content greater than 15 ppm but whose contribution to the sulfur content of the MVNRLM diesel fuel is less than 0.04 ppm at its maximum recommended concentration, and which contains no other additives with a sulfur content greater than 15 ppm must establish all the following in order to use this section as an alternative to the defense element under § 80.613(a)(1)(vi):

(a)(1) The blender of the additive package has a sulfur content test result for the MVNRLM diesel fuel prior to blending of the additive package that indicates that the additive package, when added, will not cause the MVNRLM diesel fuel sulfur content to exceed 15 ppm sulfur.

(2) In cases where the storage tank that contains MVNRLM diesel fuel prior to additization contains multiple fuel batches, the blender of the additive package must have sulfur test results on each batch of MVNRLM diesel fuel that was added to the storage tank during the current and previous volumetric accounting reconciliation (VAR) periods, which indicates that the additive package, when added to the component MVNRLM diesel fuel batch in the storage tank with the highest sulfur level would not cause that component batch to exceed 15 ppm sulfur.

(b) The VAR standard is attained as determined under the provisions of this section. The VAR reconciliation standard is attained when the actual concentration of the additive package used per the VAR formula record under paragraph (f) of this section is less than the concentration that would have caused any batch of MVNRLM diesel fuel to exceed a sulfur content of

15 ppm given the maximum sulfur test result on any MVNRLM diesel fuel batch described in paragraph (a) of this section that is additized with the additive package during the VAR period.

(c) The product transfer document complies with the applicable sulfur information requirements of § 80.591.

(d) If more than one additive package containing a static dissipater additive and/or red dye is used during a VAR period, then a separate VAR formula record must be created for MVNRLM diesel fuel additized for each of the additive packages used. In such cases, the amount of the each additive package used must be accurately and separately measured, either through the use of a separate storage tank, a separate meter, or some other measurement system that is able to accurately distinguish its use.

(e) Recorded volumes of MVNRLM diesel fuel and the additive package must be expressed to the nearest gallon (or smaller units), except that additive package volumes of five gallons or less must be expressed to the nearest tenth of a gallon (or smaller units). However, if the blender's equipment cannot accurately measure to the nearest tenth of a gallon, then such volumes must be rounded upward to the next higher gallon for purposes of determining compliance with this section.

(f) Each VAR formula record must also contain the following information:

(1) *Automated blending facilities*. In the case of an automated additive package blending facility, for each VAR period, for each storage system for an additive package containing a static dissipater additive and/or red dye, and each additive package in that storage system, the following must be recorded:

(i)(A) The manufacturer and commercial identifying name of the package being reconciled, the maximum recommended treatment level, the potential contribution to the sulfur content of the finished fuel that might result when the additive package is used at its maximum recommended treatment level, the intended treatment level, and the contribution to the sulfur content of the finished fuel that would result when the additive package is used at its intended treatment level. The intended treatment level is the treatment level that the additive injection equipment is set to.

(B) The maximum recommended treatment level and the intended treatment level must be expressed in terms of gallons of the additive package per thousand gallons of MVNRLM diesel fuel, and expressed to four significant figures. If the additive package storage system which is the subject of the VAR formula record is a proprietary system under the control of a customer, this fact must be indicated on the record.

(ii) The total volume of the additive package blended into MVNRLM diesel fuel, in accordance with one of the following methods, as applicable.

(A) For a facility which uses in-line meters to measure usage, the total volume of additive package measured, together with supporting data which includes one of the following: the beginning and ending meter readings for each meter being measured, the metered batch volume measurements for each meter being measured, or other comparable metered measurements. The supporting data may be supplied on the VAR formula record or in the form of computer printouts or other comparable VAR supporting documentation.

(B) For a facility which uses a gauge to measure the inventory of the additive package storage tank, the total volume of additive package shall be calculated from the following equation:

$$\text{Additive package volume} = (A) - (B) + (C) - (D)$$

Where:

A = Initial additive package inventory of the tank

B = Final additive package inventory of the tank

C = Sum of any additions to additive package inventory

D = Sum of any withdrawals from additive package inventory for purposes other than the additization of MVNRLM diesel fuel.

(C) The value of each variable in the equation in paragraph (f)(1)(ii)(B) of this section must be separately recorded on the VAR formula record. In addition, a list of each additive package addition included in variable C and a list of each additive package withdrawal included in variable D must be provided, either on the formula record or as VAR supporting documentation.

(iii) The total volume of MVNRLM diesel fuel to which the additive package has been added, together with supporting data which includes one of the following: the beginning and ending meter measurements for each meter being measured, the metered batch volume measurements for each meter being measured, or other comparable metered measurements. The supporting data may be supplied on the VAR formula record or in the form of computer printouts or other comparable VAR supporting documentation.

(iv) The actual concentration of the additive package, calculated as the total volume of the additive package added (pursuant to paragraph (f)(1)(ii) of this section), divided by the total volume of MVNRLM diesel fuel (pursuant to paragraph (f)(1)(iii) of this section). The concentration must be calculated and recorded to 4 significant figures.

(v) A list of each additive package concentration rate set for the additive package that is the subject of the VAR record, together with the date and description of each adjustment to any initially set concentration. The concentration adjustment information may be supplied on the VAR formula record or in the form of computer printouts or other comparable VAR supporting documentation. No concentration setting is permitted above the maximum recommended concentration supplied by the additive manufacturer, except as described in paragraph (f)(1)(vii) of this section.

(vi) The dates of the VAR period, which shall be no longer than thirty-one days. If the VAR period is contemporaneous with a calendar month, then specifying the month will fulfill this requirement; if not, then the beginning and ending dates and times of the VAR period must be listed. The times may be supplied on the VAR formula record or in supporting documentation. Any adjustment to any additive package concentration rate initially set in the VAR period shall terminate that VAR period and initiate a new VAR period, except as provided in paragraph (f)(1)(vii) of this section.

(vii) The concentration setting for the additive package injector may be changed from the concentration initially set in the VAR period without terminating that VAR period, provided that:

(A) The purpose of the change is to correct a batch under-additization prior to the end of the VAR period and prior to the transfer of the batch to another party, or to correct an equipment malfunction where there has been no over-additization of the additive;

(B) The concentration is immediately returned after the correction to a concentration that fulfills the requirements of this paragraph (f);

(C) The blender creates and maintains documentation establishing the date and adjustments of the correction; and

(D) If the correction is initiated only to rectify an equipment malfunction, and the amount of additive package used in this procedure is not added to MVNRLM diesel fuel within the compliance period, then this amount is subtracted from the additive package volume listed on the VAR formula record. In such a case, the addition of this amount of additive must be reflected in the following VAR period.

(viii) The measured sulfur level for each batch of MVNRLM diesel fuel to which the additive package is added during each VAR period. In cases where the storage tank that contains MVNRLM diesel fuel prior to additization contains multiple fuel batches, a measured sulfur level on each batch added to the storage tank during the current and previous VAR periods must be recorded.

(2) *Non-automated facilities.* In the case of a facility in which hand blending or any other non-automated method is used to blend the additive packages, for each additive package and for each batch of MVNRLM diesel fuel to which the additive package is being added, the following shall be recorded:

(i) The manufacturer and commercial identifying name of the additive package being reconciled, the maximum recommended treatment level, the potential contribution to the sulfur content of the finished fuel that might result when the additive package is used at its maximum recommended treatment level, the intended treatment level, and the contribution to the sulfur content of the finished fuel that

would result when the additive package is used at its intended treatment level.

(A) The maximum recommended treatment level and the intended treatment level must be expressed in terms of gallons of additive package per thousand gallons of MVNRLM diesel fuel, and expressed to four significant figures.

(B) If the additive package storage system which is the subject of the VAR formula record is a proprietary system under the control of a customer, this fact must be indicated on the record.

(ii) The date of the additization that is the subject of the VAR formula record.

(iii) The volume of added additive package.

(iv) The volume of the MVNRLM diesel fuel to which the additive package has been added.

(v) The brand (if known) of MVNRLM diesel fuel.

(vi) The actual additive package concentration, calculated as the volume of added additive package (pursuant to paragraph (f)(1)(ii)(B) of this section), divided by the volume of MVNRLM diesel fuel (pursuant to paragraph (f)(1)(iii) of this section). The concentration must be calculated and recorded to four significant figures.

(vii) The measured sulfur level for each batch of MVNRLM diesel fuel to which the additive package is added during each VAR period. In cases where the storage tanks that contains MVNRLM diesel fuel prior to additization contains multiple fuel batches, a measured sulfur level on each batch added to the storage tank during the current and previous VAR periods must be recorded.

(3) *VAR formula records*. Every VAR formula record created pursuant to paragraphs (f)(1) and (f)(2) of this section shall contain the following:

(i) The signature of the creator of the VAR record;

(ii) The date of the creation of the VAR record; and

(iii) A certification of correctness by the creator of the VAR record.

(4) *Electronically-generated VAR formula and supporting records*. (i) Electronically-generated records are acceptable for VAR formula records and supporting documentation (including PTDs), provided that they are complete, accessible, and easily readable. VAR formula records must also be stored with access and audit security, which must restrict to a limited number of specified people those who have the ability to alter or delete the records. In addition, parties maintaining records electronically must make available to EPA the hardware and software necessary to review the records.

(ii) Electronically-generated VAR formula records may use an electronic user identification code to satisfy the signature requirements of paragraph (f)(3)(i) of this section, provided that:

(A) The use of the identification is limited to the record creator; and

(B) A paper record is maintained, which is signed and dated by the VAR formula record creator, acknowledging that the use of that particular user ID on a VAR formula record is equivalent to his/her signature on the document.

(5) *Calibration requirements for automated blending facilities*. Automated static dissipater additive package blenders must calibrate their additive package equipment at least once in each calendar half year, with the acceptable calibrations being no less than one hundred twenty days apart, except that calibrations may be closer in time so long as at least two calibrations meet the requirements to be in separate halves of the calendar year and no less than 120 days apart. Equipment recalibration is also required each time the static dissipater additive package is changed, unless written documentation indicates that the new additive package has the same viscosity as the previous additive package. Additive package change calibrations may be used to satisfy the semiannual requirement provided that the calibrations occur in the appropriate half calendar year and are no less than one hundred twenty days apart.

(6) *Additional VAR documentation*. The following VAR supporting documentation must also be created and maintained:

(i) For all automated additive package blending facilities, documentation reflecting performance of the calibrations required by paragraph (f)(5) of

this section, and any associated adjustments of the automated additive package injection equipment;

(ii) For all blending facilities that blend an additive package containing a static dissipater additive and/or red dye, product transfer documents for all such additive packages, and MVNRLM diesel fuel transferred into or out of the facility that is additized with an additive package containing a static dissipater additive and/or red dye;

(iii) For all automated additive package blending facilities that use an additive package containing a static dissipater additive and/or red dye, documentation establishing the brands (if known) of the MVNRLM diesel fuel which is the subject of the VAR formula record; and

(iv) For all hand blenders of an additive package that contains a static dissipater additive and/or red dye, the documentation, if in the party's possession, supporting the volumes of MVNRLM diesel fuel and additive package reported on the VAR formula record.

(7) *Document retention and availability.* All blenders of an additive package that contains a static dissipater additive and/or red dye shall retain the documents required under this section for a period of five years from the date the VAR formula records and supporting documentation are created, and shall deliver them upon request to the EPA Administrator or the Administrator's authorized representative.

(i) Except as provided in paragraph (f)(7)(iii) of this section, automated additive package blender facilities and hand-blender facilities which are terminals, which physically blend an additive packages that contains a static dissipater additive and/or red dye into MVNRLM diesel fuel, must make immediately available to EPA, upon request, the preceding twelve months of VAR formula records plus the preceding two months of VAR supporting documentation.

(ii) Except as provided in paragraph (f)(7)(iii) of this section, other hand-blending additive package facilities which physically blend additive package that contains a static dissipater additive and/or red dye into MVNRLM diesel fuel must make immediately available to EPA, upon request, the preceding two months of VAR formula records and VAR supporting documentation.

(iii) Facilities which have centrally maintained records at other locations, or have customers who maintain their own records at other locations for their proprietary additive package injection systems, and which can document this fact to the Agency, may have until the start of the next business day after the EPA request to supply VAR supporting documentation, or longer if approved by the Agency.

(iv) In this paragraph (f)(7), the term ''immediately available'' means that the records must be provided, electronically or otherwise, within approximately one hour of EPA's request, or within a longer time frame as approved by EPA.

[69 FR 39205, June 29, 2004, as amended at 71 FR 25723, May 1, 2006]

§ 80.615 What penalties apply under this subpart?

(a) Any person liable for a violation under § 80.612 is subject to civil penalties as specified in section 205 of the Clean Air Act (42 U.S.C. 7524) for every day of each such violation and the amount of economic benefit or savings resulting from each violation.

(b)(1) Any person liable under § 80.612(a)(1) for a violation of an applicable standard or requirement under this Subpart I or for causing another party to violate such standard or requirement, is subject to a separate day of violation for each and every day the non-complying diesel fuel remains any place in the distribution system.

(2) Any person liable under § 80.612(a)(2) for causing motor vehicle diesel fuel, NRLM diesel fuel, ECA marine fuel, heating oil, or other distillate fuel to be in the distribution system which does not comply with an applicable standard or requirement of this subpart I, except as allowed under 40 CFR part 1043, is subject to a separate day of violation for each and every day that the noncomplying fuel remains any place in the diesel fuel distribution system.

(3) Any person liable under § 80.612(a)(1) for blending into diesel

fuel an additive violating the applicable sulfur standard pursuant to the requirements of § 80.521(a) or (b), as applicable, or of causing another party to so blend such an additive, is subject to a separate day of violation for each and every day the motor vehicle diesel fuel or NRLM diesel fuel into which the noncomplying additive was blended, remains any place in the fuel distribution system.

(4) For purposes of this paragraph (b):

(i) The length of time the motor vehicle diesel fuel, NRLM diesel fuel, ECA marine fuel, heating oil, or other distillate fuel in question remained in the diesel fuel distribution system is deemed to be 25 days, except as further specified in paragraph (b)(4)(ii) of this section.

(ii) The length of time is deemed not to be 25 days if a person subject to liability demonstrates by reasonably specific showings, by direct or circumstantial evidence, that the noncomplying motor vehicle, NR diesel fuel, NRLM diesel fuel, ECA marine fuel, heating oil, or distillate fuel remained in the distribution system for fewer than or more than 25 days.

(c) Any person liable under § 80.612(b) for failure to meet, or causing a failure to meet, a provision of this subpart is liable for a separate day of violation for each and every day such provision remains unfulfilled.

[69 FR 39208, June 29, 2004, as amended at 75 FR 22977, Apr. 30, 2010]

§ 80.616 What are the enforcement exemptions for California diesel distributed within the State of California?

(a) For the purpose of this section, ''California diesel fuel'' is defined as any diesel fuel physically within the State of California that satisfies all requirements of Title 13, California Code of Regulations, Sections 2281–2285, and is sold, intended for sale, or made available for sale as a motor fuel in the State of California, subsequent to May 31, 2006.

(b) Any retailer or wholesale purchaser-consumer of California diesel fuel is, with regard to such diesel fuel, exempt from the labeling requirements contained in §§ 80.570, 80.571, 80.572, 80.573, and 80.574.

(c)(1) Any refiner, importer, or distributor of California diesel fuel is, with regard to such diesel fuel, exempt from the product transfer requirements of § 80.590, provided that the product transfer document contains the following statement:

''California diesel fuel. Maximum 15 ppm sulfur.''

(2) Product codes may be used to satisfy this product transfer document requirement.

(d) Any refiner, importer, or distributor of California diesel fuel is, with regard to such diesel fuel, exempt from the designation requirements of § 80.598, provided that:

(1) The refiner, importer, or distributor does not transfer custody of the California diesel fuel to facility outside the State of California;

(2) The fuel is intended to be sold or made available for sale in the State of California; and

(3) The PTD requirements in paragraph (f) of the section are satisfied.

(e) Any refiner, importer, or distributor of California diesel fuel is, with regard to such diesel fuel, exempt from the volume balance requirements of § 80.599.

(f) Any refiner, importer, or distributor of California diesel fuel is, with regard to such diesel fuel, exempt from the recordkeeping requirements under designate and track provisions of § 80.600.

(g) Any refiner, importer, or distributor of California diesel fuel is, with regard to such diesel fuel, exempt from the reporting requirements for the purposes of the designate and track provisions of § 80.601.

(h) Any refiner, importer, or distributor of California diesel fuel is, with regard to such diesel fuel, exempt from the recordkeeping requirements for entities in the MV or NRLM diesel fuel and diesel fuel additive production, importation, and distribution systems of §§ 80.592 and 80.602 except those relating to sampling and testing, under §§ 80.581, 80.584, 80.585, and 80.586.

(i) Any refiner or importer of California diesel fuel is, with regard to

such diesel fuel, exempt from the annual reporting requirements for NRLM diesel under § 80.604.

[71 FR 25725, May 1, 2006]

§ 80.617 How may California diesel fuel be distributed or sold outside of the State of California?

California diesel may be distributed or sold outside of the State of California provided the provisions of either paragraph (a) or (b) of this section are satisfied:

(a) *Distribution of taxed or dyed California diesel fuel.* California diesel fuel that is distributed from a truck loading terminal after such diesel has been taxed or dyed may be distributed or sold outside of the State of California, provided that it is accompanied by a Product Transfer Document that states: ''California diesel fuel. Maximum 15 ppm sulfur.''; or

(b) *Distribution of untaxed and undyed diesel California diesel fuel.* California diesel may be distributed or sold outside of the State of California without having been dyed or taxed provided that the requirements of either paragraph (b)(1) or (b)(2) of this section are satisfied. (Note that the requirements of IRS code 26 CFR part 48 along with other applicable requirements outside of this 40 CFR part 80 subpart I must also be satisfied.)

(1)(i) Prior to shipment outside the State of California, the California diesel fuel meets all requirements of § 80.616 and meets all of the requirements of 40 CFR part 80, subpart I that are not exempted under this section;

(ii) The California diesel fuel is shipped out of the state via pipeline;

(iii) The pipeline shipping the California diesel out of state maintains the California diesel fuel designation while the product is in the pipeline's custody;

(iv) The pipeline provides a product transfer document that clearly indicates that the product is designated as California diesel fuel;

(v) Upon delivery into the terminal, the terminal receiving the California diesel fuel redesignates it as motor vehicle diesel meeting the 15 ppm sulfur standard; and

(vi) The terminal includes the volumes of California diesel fuel redesignated as motor vehicle diesel fuel in the total volume of motor vehicle diesel designated meeting the 15 ppm sulfur standard received by the terminal, per the volume balance and anti-downgrading equations for motor vehicle diesel fuel found in § 80.599(b) and (e).

(2)(i) The California diesel fuel is delivered via pipeline to a terminal outside the State of California that has a tank dedicated to the receipt of California diesel fuel and which intends to distribute the diesel fuel from the dedicated tank back into the State of California;

(ii) The terminal must maintain the designation of the diesel fuel as ''California diesel fuel'' and not redesignate it to another product;

(iii) The product transfer documents for California diesel fuel distributed by a terminal outside of the state of California must indicate ''California diesel fuel. Maximum 15 ppm sulfur.''; and,

(iv) Any volume of California diesel fuel distributed by a terminal outside the state of California must be taxed or dyed and must be excluded from the terminal's volume balance equations under § 80.599.

[71 FR 25726, May 1, 2006]

§§ 80.618–80.619 [Reserved]

PROVISIONS FOR FOREIGN REFINERS AND IMPORTERS FOR MOTOR VEHICLE DIESEL FUEL SUBJECT TO A TEMPORARY COMPLIANCE OPTION OR HARDSHIP PROVISION

§ 80.620 What are the additional requirements for diesel fuel or distillates produced by foreign refineries subject to a temporary refiner compliance option, hardship provisions, or motor vehicle or NRLM diesel fuel credit provisions?

(a) *Definitions.* (1) A foreign refinery is a refinery that is located outside the United States, the Commonwealth of Puerto Rico, the Virgin Islands, Guam, American Samoa, and the Commonwealth of the Northern Mariana Islands (collectively referred to in this section as ''the United States'').

(2) A foreign refiner is a person who meets the definition of refiner under § 80.2(i) for a foreign refinery.

(3) A diesel fuel program foreign refiner (''DFR'') is a foreign refiner that

has been approved by EPA for participation in any motor vehicle diesel fuel or NRLM diesel fuel provision of § 80.530 through 80.533, or §§ 80.535, 80.536, 80.540, 80.552, 80.553, 80.554, 80.560 or 80.561 (collectively referred to as ''diesel foreign refiner program'').

(4) ''DFR-Diesel'' means diesel fuel or distillate fuel as applicable under subpart I of this part produced at a DFR refinery that is imported into the United States.

(5) ''Non-DFR-Diesel'' means diesel fuel or distillate fuel that is produced at a foreign refinery that has not been approved as a DFR foreign refiner, diesel fuel produced at a DFR foreign refinery that is not imported into the United States, and diesel fuel produced at a DFR foreign refinery during a period when the foreign refiner has opted to not participate in the DFR-Diesel foreign refiner program under paragraph (c)(3) of this section.

(6) ''Certified DFR-Diesel'' means DFR-Diesel the foreign refiner intends to include in the foreign refinery's compliance calculations under any provisions of § 80.530 through 80.533, or §§ 80.535, 80.536, 80.540, 80.552, 80.553, 80.554, 80.560 or 80.561 and does include in these compliance calculations when reported to EPA.

(7) ''Non-Certified DFR-Diesel'' means DFR-Diesel fuel that a DFR foreign refiner imports to the United States that is not Certified DFR-Diesel.

(b) *Baseline*. For any foreign refiner to obtain approval under the diesel foreign refiner program of this subpart for any refinery, it must apply for approval under the applicable provisions of this subpart. To obtain approval the refiner is required, as applicable, to demonstrate a volume baseline under subpart I of this part.

(1) The refiner shall follow the procedures, applicable to volume baselines and using diesel fuel, or if applicable, heating oil, instead of gasoline, in §§ 80.91 through 80.93 to establish the volume of motor vehicle diesel fuel that was produced at the refinery and imported into the United States during the applicable years for purposes of establishing a baseline under Subpart I for applicable fuels produced for use in the United States.

(2) In making determinations for foreign refinery baselines EPA will consider all information supplied by a foreign refiner, and in addition may rely on any and all appropriate assumptions necessary to make such determinations.

(3) Where a foreign refiner submits a petition that is incomplete or inadequate to establish an accurate baseline, and the refiner fails to correct this deficiency after a request for more information, EPA will not assign an individual refinery baseline.

(c) *General requirements for DFR foreign refiners*. A foreign refiner of a refinery that is approved under the diesel foreign refiner program of this subpart must designate each batch of diesel fuel produced at the foreign refinery that is exported to the United States as either Certified DFR-Diesel or as Non-Certified DFR-Diesel, except as provided in paragraph (c)(3) of this section. It must further designate all Certified DFR-Diesel as provided in § 80.598, and designate whether the diesel fuel is dyed or undyed, and for heating oil and/or locomotive or marine diesel fuel whether it is marked or unmarked under § 80.510(d) through (f). It must further designate any credits earned as either nonroad diesel credits or motor vehicle diesel credits.

(1) In the case of Certified DFR-Diesel, the foreign refiner must meet all requirements that apply to refiners under this subpart, except that:

(i) For purposes of complying with the compliance option requirements of § 80.530, motor vehicle diesel fuel produced by a foreign refinery must comply separately for each Credit Trading Area of import, as defined in § 80.531(a)(5).

(ii) For purposes of complying with the compliance option requirements of § 80.530, credits obtained from any other refinery or from any importer must have been generated in the same Credit Trading Area as the Credit Trading Area of import of the fuel for which credits are needed to achieve compliance.

(iii) For purposes of generating credits under § 80.531, credits shall be generated separately by Credit Trading Area of import and shall be designated

by Credit Trading Area of importation and by port of importation.

(2) In the case of Non-Certified DFR-Diesel, the foreign refiner shall meet all the following requirements:

(i) The designation requirements in this section.

(ii) The reporting requirements in this section and in §§ 80.593, 80.594, 80.601, and 80.604.

(iii) The product transfer document requirements in this section and in §§ 80.590 and 80.591.

(iv) The prohibitions in this section and in § 80.610.

(3)(i) Any foreign refiner that has been approved to produce diesel fuel subject to the diesel foreign refiner program for a foreign refinery under this subpart may elect to classify no diesel fuel imported into the United States as DFR-Diesel provided the foreign refiner notifies EPA of the election no later than 60 calendar days prior to the beginning of the compliance period.

(ii) An election under paragraph (c)(3)(i) of this section shall be for a 12 month compliance period and apply to all diesel fuel that is produced by the foreign refinery that is imported into the United States, and shall remain in effect for each succeeding year unless and until the foreign refiner notifies EPA of the termination of the election. The change in election shall take effect at the beginning of the next annual compliance period.

(d) *Designation, product transfer documents, and foreign refiner certification.* (1) Any foreign refiner of a foreign refinery that has been approved by EPA to produce motor vehicle diesel fuel subject to the diesel foreign refiner program must designate each batch of DFR-Diesel as such at the time the diesel fuel is produced, unless the refiner has elected to classify no diesel fuel exported to the United States as DFR-Diesel under paragraph (c)(3) of this section.

(2) On each occasion when any person transfers custody or title to any DFR-Diesel prior to its being imported into the United States, it must include the following information as part of the product transfer document information in this section:

(i) Designation of the diesel fuel or distillate as Certified DFR-Diesel or as Non-Certified DFR-Diesel, and if it is Certified DFR-Diesel, further designate the fuel pursuant to § 80.598, and whether the diesel fuel or distillate is dyed or undyed, and for heating oil whether it is marked or unmarked under § 80.510(d) through (f), and all other applicable product transfer document information required under § 80.590; and

(ii) The name and EPA refinery registration number (under § 80.597) of the refinery where the DFR-Diesel was produced.

(3) On each occasion when DFR-Diesel is loaded onto a vessel or other transportation mode for transport to the United States, the foreign refiner shall prepare a certification for each batch of the DFR-Diesel that meets the following requirements.

(i) The certification shall include the report of the independent third party under paragraph (f) of this section, and the following additional information:

(A) The name and EPA registration number of the refinery that produced the DFR-Diesel;

(B) The identification of the diesel fuel as Certified DFR-Diesel or Non-Certified DFR-Diesel;

(C) The volume of DFR-Diesel being transported, in gallons;

(D) In the case of Certified DFR-Diesel:

(*1*) The sulfur content as determined under paragraph (f) of this section, and the applicable designations stated in paragraph (d)(2)(i) of this section; and

(*2*) A declaration that the DFR-Diesel is being included in the applicable compliance calculations required by EPA under this subpart.

(ii) The certification shall be made part of the product transfer documents for the DFR-Diesel.

(e) *Transfers of DFR-Diesel to non-United States markets.* The foreign refiner is responsible to ensure that all diesel fuel classified as DFR-Diesel is imported into the United States. A foreign refiner may remove the DFR-Diesel classification, and the diesel fuel need not be imported into the United States, but only if:

(1)(i) The foreign refiner excludes:

(A) The volume of diesel from the refinery's compliance report under § 80.593, § 80.601, or § 80.604; and

(B) In the case of Certified DFR-Diesel, the volume of the diesel fuel from the compliance report under § 80.593, § 80.601, or § 80.604.

(ii) The exclusions under paragraph (e)(1)(i) of this section shall be on the basis of the designations under § 80.598 and this section, and volumes determined under paragraph (f) of this section.

(2) The foreign refiner obtains sufficient evidence in the form of documentation that the diesel fuel was not imported into the United States.

(f) *Load port independent sampling, testing and refinery identification.* (1) On each occasion that DFR-Diesel is loaded onto a vessel for transport to the United States a foreign refiner shall have an independent third party:

(i) Inspect the vessel prior to loading and determine the volume of any tank bottoms;

(ii) Determine the volume of DFR-Diesel loaded onto the vessel (exclusive of any tank bottoms before loading);

(iii) Obtain the EPA-assigned registration number of the foreign refinery;

(iv) Determine the name and country of registration of the vessel used to transport the DFR-Diesel to the United States; and

(v) Determine the date and time the vessel departs the port serving the foreign refinery.

(2) On each occasion that Certified DFR-Diesel is loaded onto a vessel for transport to the United States a foreign refiner shall have an independent third party:

(i) Collect a representative sample of the Certified DFR-Diesel from each vessel compartment subsequent to loading on the vessel and prior to departure of the vessel from the port serving the foreign refinery;

(ii) Determine the sulfur content value for each compartment, and if applicable, the marker content under § 80.510(d) through (f) using an approved methodology as specified in §§ 80.580 through 80.586 by one of the following:

(A) The third party analyzing each sample; or

(B) The third party observing the foreign refiner analyze the sample;

(iii) Review original documents that reflect movement and storage of the certified DFR-Diesel from the refinery to the load port, and from this review determine:

(A) The refinery at which the DFR-Diesel was produced; and

(B) That the DFR-Diesel remained segregated from:

(*1*) Non-DFR-Diesel and Non-Certified DFR-Diesel; and

(*2*) Other Certified DFR-Diesel produced at a different refinery.

(3) The independent third party shall submit a report:

(i) To the foreign refiner containing the information required under paragraphs (f)(1) and (f)(2) of this section, to accompany the product transfer documents for the vessel; and

(ii) To the Administrator containing the information required under paragraphs (f)(1) and (f)(2) of this section, within thirty days following the date of the independent third party's inspection. This report shall include a description of the method used to determine the identity of the refinery at which the diesel fuel or distillate was produced, assurance that the diesel fuel or distillate remained segregated as specified in paragraph (n)(1) of this section, and a description of the diesel fuel's movement and storage between production at the source refinery and vessel loading.

(4) The independent third party must:

(i) Be approved in advance by EPA, based on a demonstration of ability to perform the procedures required in this paragraph (f);

(ii) Be independent under the criteria specified in § 80.65(e)(2)(iii); and

(iii) Sign a commitment that contains the provisions specified in paragraph (i) of this section with regard to activities, facilities and documents relevant to compliance with the requirements of this paragraph (f).

(g) *Comparison of load port and port of entry testing.* (1)(i) Any foreign refiner and any United States importer of Certified DFR-Diesel shall compare the results from the load port testing under paragraph (f) of this section, with the port of entry testing as reported under paragraph (o) of this section, for the

volume of diesel fuel and the sulfur content value; except as specified in paragraph (g)(1)(ii) of this section.

(ii) Where a vessel transporting Certified DFR-Diesel off loads this diesel fuel at more than one United States port of entry, and the conditions of paragraph (g)(2)(i) of this section are met at the first United States port of entry, the requirements of paragraph (g)(2) of this section do not apply at subsequent ports of entry if the United States importer obtains a certification from the vessel owner that meets the requirements of paragraph (s) of this section, that the vessel has not loaded any diesel fuel or blendstock between the first United States port of entry and the subsequent port of entry.

(2)(i) The requirements of this paragraph (g)(2) apply if—

(A) The temperature-corrected volumes determined at the port of entry and at the load port differ by more than one percent; or

(B) The sulfur content value determined at the port of entry is higher than the sulfur content value determined at the load port, and the amount of this difference is greater than the reproducibility amount specified for the port of entry test result by the American Society of Testing and Materials (ASTM) for a test method used for testing the port of entry sample under the provisions §§ 80.580 through 80.586.

(ii) The United States importer and the foreign refiner shall treat the diesel fuel as Non-Certified DFR-Diesel, and the foreign refiner shall exclude the diesel fuel volume from its diesel fuel volumes calculations and sulfur standard designations under § 80.598.

(h) *Attest requirements.* Refiners, for each annual compliance period, must arrange to have an attest engagement performed of the underlying documentation that forms the basis of any report required under this subpart. The attest engagement must comply with the procedures and requirements that apply to refiners under §§ 80.125 through 80.130, or other applicable attest engagement provisions, and must be submitted to the Administrator of EPA by August 31 of each year for the prior annual compliance period. The following additional procedures shall be carried out for any foreign refiner of DFR-Diesel.

(1) The inventory reconciliation analysis under § 80.128(b) and the tender analysis under § 80.128(c) shall include Non-DFR-Diesel.

(2) Obtain separate listings of all tenders of Certified DFR-Diesel and of Non-Certified DFR-Diesel, and obtain separate listings of Certified DFR-Diesel based on whether it is 15 ppm sulfur content diesel fuel, 500 ppm sulfur content diesel fuel or high sulfur fuel having a sulfur content greater than 500 ppm (and if so, whether the fuel is heating oil, small refiner diesel fuel, diesel fuel produced through the use of credits, or other applicable designation under § 80.598). Agree the total volume of tenders from the listings to the diesel fuel inventory reconciliation analysis in § 80.128(b), and to the volumes determined by the third party under paragraph (f)(1) of this section.

(3) For each tender under paragraph (h)(2) of this section, where the diesel fuel is loaded onto a marine vessel, report as a finding the name and country of registration of each vessel, and the volumes of DFR-Diesel loaded onto each vessel.

(4) Select a sample from the list of vessels identified in paragraph (h)(3) of this section used to transport Certified DFR-Diesel, in accordance with the guidelines in § 80.127, and for each vessel selected perform the following:

(i) Obtain the report of the independent third party, under paragraph (f) of this section, and of the United States importer under paragraph (o) of this section.

(A) Agree the information in these reports with regard to vessel identification, diesel fuel volumes and sulfur content test results.

(B) Identify, and report as a finding, each occasion the load port and port of entry sulfur content and volume results differ by more than the amounts allowed in paragraph (g) of this section, and determine whether the foreign refiner adjusted its refinery calculations as required in paragraph (g) of this section.

(ii) Obtain the documents used by the independent third party to determine transportation and storage of the Certified DFR-Diesel from the refinery to

the load port, under paragraph (f) of this section. Obtain tank activity records for any storage tank where the Certified DFR-Diesel is stored, and pipeline activity records for any pipeline used to transport the Certified DFR-Diesel, prior to being loaded onto the vessel. Use these records to determine whether the Certified DFR-Diesel was produced at the refinery that is the subject of the attest engagement, and whether the Certified DFR-Diesel was mixed with any Non-Certified DFR-Diesel, Non-DFR-Diesel, or any Certified DFR-Diesel produced at a different refinery.

(5) Select a sample from the list of vessels identified in paragraph (h)(3) of this section used to transport certified and Non-Certified DFR-Diesel, in accordance with the guidelines in § 80.127, and for each vessel selected perform the following:

(i) Obtain a commercial document of general circulation that lists vessel arrivals and departures, and that includes the port and date of departure of the vessel, and the port of entry and date of arrival of the vessel.

(ii) Agree the vessel's departure and arrival locations and dates from the independent third party and United States importer reports to the information contained in the commercial document.

(6) Obtain separate listings of all tenders of Non-DFR-Diesel, and perform the following:

(i) Agree the total volume and sulfur content of tenders from the listings to the diesel fuel inventory reconciliation analysis in § 80.128(b).

(ii) Obtain a separate listing of the tenders under this paragraph (h)(6) where the diesel fuel is loaded onto a marine vessel. Select a sample from this listing in accordance with the guidelines in § 80.127, and obtain a commercial document of general circulation that lists vessel arrivals and departures, and that includes the port and date of departure and the ports and dates where the diesel fuel was off loaded for the selected vessels. Determine and report as a finding the country where the diesel fuel was off loaded for each vessel selected.

(7) In order to complete the requirements of this paragraph (h) an auditor shall:

(i) Be independent of the foreign refiner;

(ii) Be licensed as a Certified Public Accountant in the United States and a citizen of the United States, or be approved in advance by EPA based on a demonstration of ability to perform the procedures required in §§ 80.125 through 80.130 and this paragraph (h); and

(iii) Sign a commitment that contains the provisions specified in paragraph (i) of this section with regard to activities and documents relevant to compliance with the requirements of §§ 80.125 through 80.130 and this paragraph (h).

(i) *Foreign refiner commitments.* Any foreign refiner shall commit to and comply with the provisions contained in this paragraph (i) as a condition to being approved for a temporary refiner diesel fuel program option.

(1) Any United States Environmental Protection Agency inspector or auditor must be given full, complete and immediate access to conduct inspections and audits of the foreign refinery.

(i) Inspections and audits may be either announced in advance by EPA, or unannounced.

(ii) Access will be provided to any location where:

(A) Diesel fuel is produced;

(B) Documents related to refinery operations are kept;

(C) Diesel fuel or blendstock samples are tested or stored; and

(D) DFR-Diesel is stored or transported between the foreign refinery and the United States, including storage tanks, vessels and pipelines.

(iii) Inspections and audits may be by EPA employees or contractors to EPA.

(iv) Any documents requested that are related to matters covered by inspections and audits must be provided to an EPA inspector or auditor on request.

(v) Inspections and audits by EPA may include review and copying of any documents related to:

(A) Refinery baseline establishment, if applicable, including the volume, sulfur content and dye and marker status of diesel fuel, heating oil and other

distillates; transfers of title or custody of any diesel fuel, heating oil or blendstocks whether DFR-Diesel or Non-DFR-Diesel, produced at the foreign refinery during the period January 1, 1998 through the date of the refinery baseline petition or through the date of the inspection or audit if a baseline petition has not been approved, and any work papers related to refinery baseline establishment;

(B) The volume and sulfur content of DFR-Diesel;

(C) The proper classification of diesel fuel as being DFR-Diesel or as not being DFR-Diesel, or as Certified DFR-Diesel or as Non-Certified DFR-Diesel, and all other relevant designations under this subpart, including § 80.598 and this section;

(D) Transfers of title or custody to DFR-Diesel;

(E) Sampling and testing of DFR-Diesel;

(F) Work performed and reports prepared by independent third parties and by independent auditors under the requirements of this section, including work papers; and

(G) Reports prepared for submission to EPA, and any work papers related to such reports.

(vi) Inspections and audits by EPA may include taking samples of diesel fuel, heating oil, other distillates, diesel fuel additives or blendstock, dyes and chemical markers and interviewing employees.

(vii) Any employee of the foreign refiner must be made available for interview by the EPA inspector or auditor, on request, within a reasonable time period.

(viii) English language translations of any documents must be provided to an EPA inspector or auditor, on request, within 10 working days.

(ix) English language interpreters must be provided to accompany EPA inspectors and auditors, on request.

(2) An agent for service of process located in the District of Columbia shall be named, and service on this agent constitutes service on the foreign refiner or any employee of the foreign refiner for any action by EPA or otherwise by the United States related to the requirements of this subpart.

(3) The forum for any civil or criminal enforcement action related to the provisions of this section for violations of the Clean Air Act or regulations promulgated thereunder shall be governed by the Clean Air Act, including the EPA administrative forum where allowed under the Clean Air Act.

(4) United States substantive and procedural laws shall apply to any civil or criminal enforcement action against the foreign refiner or any employee of the foreign refiner related to the provisions of this section.

(5) Submitting a petition for participation in the diesel foreign refiner program or producing and exporting diesel fuel or heating oil under any such program, and all other actions to comply with the requirements of this subpart relating to participation in any diesel foreign refiner program, or to establish an individual refinery motor vehicle diesel fuel volume baseline or other baseline under subpart I of this part (if applicable) constitute actions or activities that satisfy the provisions of 28 U.S.C. 1605(a)(2), but solely with respect to actions instituted against the foreign refiner, its agents and employees in any court or other tribunal in the United States for conduct that violates the requirements applicable to the foreign refiner under this subpart, including conduct that violates the False Statements Accountability Act of 1996 (18 U.S.C. 1001) and section 113(c)(2) of the Clean Air Act (42 U.S.C. 7413).

(6) The foreign refiner, or its agents or employees, will not seek to detain or to impose civil or criminal remedies against EPA inspectors or auditors, whether EPA employees or EPA contractors, for actions performed within the scope of EPA employment related to the provisions of this section.

(7) The commitment required by this paragraph (i) shall be signed by the owner or president of the foreign refiner business.

(8) In any case where DFR-Diesel produced at a foreign refinery is stored or transported by another company between the refinery and the vessel that transports the DFR-Diesel to the United States, the foreign refiner shall obtain from each such other company a

commitment that meets the requirements specified in paragraphs (i)(1) through (7) of this section, and these commitments shall be included in the foreign refiner's petition to participate in any diesel foreign refiner program .

(j) *Sovereign immunity*. By submitting a petition for participation in any diesel foreign refiner program under this subpart (and baseline, if applicable) under this section, or by producing and exporting diesel fuel to the United States under any such program, the foreign refiner, and its agents and employees, without exception, become subject to the full operation of the administrative and judicial enforcement powers and provisions of the United States without limitation based on sovereign immunity, with respect to actions instituted against the foreign refiner, its agents and employees in any court or other tribunal in the United States for conduct that violates the requirements applicable to the foreign refiner under this subpart including conduct that violates the False Statements Accountability Act of 1996 (18 U.S.C. 1001) and section 113(c)(2) of the Clean Air Act (42 U.S.C. 7413).

(k) *Bond posting*. Any foreign refiner shall meet the requirements of this paragraph (k) as a condition to approval for any diesel foreign refiner program under this subpart.

(1) The foreign refiner shall post a bond of the amount calculated using the following equation:

$$\text{Bond} = G \times \$\,0.01$$

Where:

Bond = amount of the bond in U.S. dollars

G = the applicable volume baseline under Subpart I for diesel fuel or distillate produced at the foreign refinery and exported to the United States, in gallons.

(2) Bonds shall be posted by:

(i) Paying the amount of the bond to the Treasurer of the United States;

(ii) Obtaining a bond in the proper amount from a third party surety agent that is payable to satisfy United States administrative or judicial judgments against the foreign refiner, provided EPA agrees in advance as to the third party and the nature of the surety agreement; or

(iii) An alternative commitment that results in assets of an appropriate liquidity and value being readily available to the United States, provided EPA agrees in advance as to the alternative commitment.

(3) Bonds posted under this paragraph (k) shall—

(i) Be used to satisfy any judicial judgment that results from an administrative or judicial enforcement action for conduct in violation of this subpart, including where such conduct violates the False Statements Accountability Act of 1996 (18 U.S.C. 1001) and section 113(c)(2) of the Clean Air Act (42 U.S.C. 7413);

(ii) Be provided by a corporate surety that is listed in the United States Department of Treasury Circular 570 ''Companies Holding Certificates of Authority as Acceptable Sureties on Federal Bonds;'' and

(iii) Include a commitment that the bond will remain in effect for at least five years following the end of latest annual reporting period that the foreign refiner produces diesel fuel pursuant to the requirements of this subpart.

(4) On any occasion a foreign refiner bond is used to satisfy any judgment, the foreign refiner shall increase the bond to cover the amount used within 90 days of the date the bond is used.

(5) If the bond amount for a foreign refiner increases, the foreign refiner shall increase the bond to cover the shortfall within 90 days of the date the bond amount changes. If the bond amount decreases, the foreign refiner may reduce the amount of the bond beginning 90 days after the date the bond amount changes.

(l) [Reserved]

(m) *English language reports*. Any report or other document submitted to EPA by a foreign refiner shall be in English language, or shall include an English language translation.

(n) *Prohibitions*. (1) No person may combine Certified DFR-Diesel with any Non-Certified DFR-Diesel or Non-DFR-Diesel, and no person may combine Certified DFR-Diesel with any Certified DFR-Diesel produced at a different refinery, until the importer has met all the requirements of paragraph (o) of this section, except as provided

in paragraph (e) of this section. No person may violate the product segregation requirements of § 80.511.

(2) No foreign refiner or other person may cause another person to commit an action prohibited in paragraph (n)(1) of this section, or that otherwise violates the requirements of this section.

(o) *United States importer requirements.* Any United States importer shall meet the following requirements:

(1) Each batch of imported diesel fuel and heating oil shall be classified by the importer as being DFR-Diesel or as Non-DFR-Diesel, and each batch classified as DFR-Diesel shall be further classified as Certified DFR-Diesel or as Non-Certified DFR-Diesel, and each batch of Certified DFR-Diesel shall be further designated pursuant to the designation requirements of § 80.598 and this section.

(2) Diesel fuel shall be classified as Certified DFR-Diesel or as Non-Certified DFR-Diesel according to the designation by the foreign refiner if this designation is supported by product transfer documents prepared by the foreign refiner as required in paragraph (d) of this section, unless the diesel fuel is classified as Non-Certified DFR-Diesel under paragraph (g) of this section. Additionally, the importer shall comply with all requirements of this subpart applicable to importers.

(3) For each diesel fuel batch classified as DFR-Diesel, any United States importer shall perform the following procedures.

(i) In the case of both Certified and Non-Certified DFR-Diesel, have an independent third party:

(A) Determine the volume of diesel fuel in the vessel;

(B) Use the foreign refiner's DFR-Diesel certification to determine the name and EPA-assigned registration number of the foreign refinery that produced the DFR-Diesel;

(C) Determine the name and country of registration of the vessel used to transport the DFR-Diesel to the United States; and

(D) Determine the date and time the vessel arrives at the United States port of entry.

(ii) In the case of Certified DFR-Diesel, have an independent third party:

(A) Collect a representative sample from each vessel compartment subsequent to the vessel's arrival at the United States port of entry and prior to off loading any diesel fuel from the vessel;

(B) Obtain the compartment samples; and

(C) Determine the sulfur content value, and if applicable, the marker content, of each compartment sample using an appropriate methodology as specified in §§ 80.580 through 80.586 by the third party analyzing the sample or by the third party observing the importer analyze the sample.

(4) Any importer shall submit reports within 30 days following the date any vessel transporting DFR-Diesel arrives at the United States port of entry:

(i) To the Administrator containing the information determined under paragraph (o)(3) of this section; and

(ii) To the foreign refiner containing the information determined under paragraph (o)(3)(ii) of this section, and including identification of the port and Credit Trading Area at which the product was offloaded.

(5) Any United States importer shall meet the requirements specified in §§ 80.510 and 80.520 and all other requirements of this subpart, for any imported diesel fuel or heating oil that is not classified as Certified DFR-Diesel under paragraph (o)(2) of this section.

(p) *Truck imports of Certified DFR-Diesel produced at a foreign refinery.* (1) Any refiner whose Certified DFR-Diesel is transported into the United States by truck may petition EPA to use alternative procedures to meet the following requirements:

(i) Certification under paragraph (d)(5) of this section;

(ii) Load port and port of entry sampling and testing under paragraphs (f) and (g) of this section;

(iii) Attest under paragraph (h) of this section; and

(iv) Importer testing under paragraph (o)(3) of this section.

(2) These alternative procedures must ensure Certified DFR-Diesel remains segregated from Non-Certified DFR-Diesel and from Non-DFR-Diesel until it is imported into the United States. The petition will be evaluated based on

whether it adequately addresses the following:

(i) Provisions for monitoring pipeline shipments, if applicable, from the refinery, that ensure segregation of Certified DFR-Diesel from that refinery from all other diesel fuel;

(ii) Contracts with any terminals and/or pipelines that receive and/or transport Certified DFR-Diesel, that prohibit the commingling of Certified DFR-Diesel with any of the following:

(A) Other Certified DFR-Diesel from other refineries.

(B) All Non-Certified DFR-Diesel.

(C) All Non-DFR-Diesel.

(D) All diesel fuel or heating oil products required to be segregated under this subpart;

(iii) Procedures for obtaining and reviewing truck loading records and United States import documents for Certified DFR-Diesel to ensure that such diesel fuel is only loaded into trucks making deliveries to the United States;

(iv) Attest procedures to be conducted annually by an independent third party that review loading records and import documents based on volume reconciliation, or other criteria, to confirm that all Certified DFR-Diesel remains segregated throughout the distribution system and is only loaded into trucks for import into the United States.

(3) The petition required by this section must be submitted to EPA along with the application for temporary refiner relief individual refinery diesel sulfur standard under this subpart.

(q) *Withdrawal or suspension of a foreign refinery's temporary refinery flexibility program approval.* EPA may withdraw or suspend a diesel refiner baseline or standard approval for a foreign refinery where—

(1) A foreign refiner fails to meet any requirement of this section;

(2) A foreign government fails to allow EPA inspections as provided in paragraph (i)(1) of this section;

(3) A foreign refiner asserts a claim of, or a right to claim, sovereign immunity in an action to enforce the requirements in this subpart; or

(4) A foreign refiner fails to pay a civil or criminal penalty that is not satisfied using the foreign refiner bond specified in paragraph (k) of this section.

(r) *Early use of a foreign refiner motor vehicle diesel fuel baseline.* (1) A foreign refiner may begin using an individual refinery baseline under subpart I of this part before EPA has approved the baseline, provided that:

(i) A baseline petition has been submitted as required in paragraph (b) of this section;

(ii) EPA has made a provisional finding that the baseline petition is complete;

(iii) The foreign refiner has made the commitments required in paragraph (i) of this section;

(iv) The persons who will meet the independent third party and independent attest requirements for the foreign refinery have made the commitments required in paragraphs (f)(3)(iii) and (h)(7)(iii) of this section; and

(v) The foreign refiner has met the bond requirements of paragraph (k) of this section.

(2) In any case where a foreign refiner uses an individual refinery baseline before final approval under paragraph (r)(1) of this section, and the foreign refinery baseline values that ultimately are approved by EPA are more stringent than the early baseline values used by the foreign refiner, the foreign refiner shall recalculate its compliance, *ab initio*, using the baseline values approved by the EPA, and the foreign refiner shall be liable for any resulting violation of the motor vehicle highway diesel fuel requirements.

(s) *Additional requirements for petitions, reports and certificates.* Any petition for approval to produce diesel fuel subject to the diesel foreign refiner program, any alternative procedures under paragraph (p) of this section, any report or other submission required by paragraph (c), (f)(2), or (i) of this section, and any certification under paragraph (d)(3) of this section shall be—

(1) Submitted in accordance with procedures specified by the Administrator, including use of any forms that may be specified by the Administrator.

(2) Be signed by the president or owner of the foreign refiner company,

or by that person's immediate designee, and shall contain the following declaration:

I hereby certify: (1) That I have actual authority to sign on behalf of and to bind [insert name of foreign refiner] with regard to all statements contained herein; (2) that I am aware that the information contained herein is being certified, or submitted to the United States Environmental Protection Agency, under the requirements of 40 CFR part 80, subpart I, and that the information is material for determining compliance under these regulations; and (3) that I have read and understand the information being certified or submitted, and this information is true, complete and correct to the best of my knowledge and belief after I have taken reasonable and appropriate steps to verify the accuracy thereof.

I affirm that I have read and understand the provisions of 40 CFR part 80, subpart I, including 40 CFR 80.620 apply to [insert name of foreign refiner]. Pursuant to Clean Air Act section 113(c) and 18 U.S.C. 1001, the penalty for furnishing false, incomplete or misleading information in this certification or submission is a fine of up to $10,000 U.S., and/or imprisonment for up to five years.

[66 FR 5136, Jan. 18, 2001, as amended at 69 FR 39208, June 29, 2004]

Subpart J—Gasoline Toxics

GENERAL INFORMATION

SOURCE: 66 FR 17263, Mar. 29, 2001, unless otherwise noted.

§§ 80.800–80.805 [Reserved]

§ 80.810 Who shall register with EPA under the gasoline toxics program?

(a) Refiners and importers who are registered by EPA under § 80.76 are deemed to be registered for purposes of this subpart.

(b) Refiners and importers subject to the standards in § 80.815 who are not registered by EPA under § 80.76 shall provide to EPA the information required by § 80.76 by October 1, 2001, or not later than three months in advance of the first date that such person produces or imports gasoline, whichever is later.

GASOLINE TOXICS PERFORMANCE REQUIREMENTS

§ 80.815 What are the gasoline toxics performance requirements for refiners and importers?

(a)(1) The gasoline toxics performance requirements of this subpart require that the annual average toxics value of a refinery or importer be compared to that refinery's or importer's compliance baseline, where compliance has been achieved if—

(i) For conventional gasoline, the annual average toxics value is less than or equal to the compliance baseline;

(ii) For reformulated gasoline and RBOB, combined, the annual average toxics value is greater than or equal to the compliance baseline.

(A) Refineries that only produce RBOB and importers that only import RBOB shall treat RBOB as reformulated gasoline for the purposes of determining compliance with the requirements of this subpart.

(B) Refineries that produce both RFG and RBOB and importers that import both RFG and RBOB must combine any RFG and RBOB qualities and volumes for the purposes of determining compliance with the requirements of this subpart.

(2) The requirements under this paragraph (a) shall be met by the importer for all imported gasoline, except gasoline imported as Certified Toxics-FRGAS under § 80.1030.

(b) The gasoline toxics requirements of this subpart apply separately for each of the following types of gasoline produced at a refinery or imported:

(1) Reformulated gasoline and RBOB, combined;

(2) Conventional gasoline.

(c) *Compliance baseline.* (1) The compliance baseline of a refinery or importer is determined in accordance with § 80.915 or § 80.855, as applicable.

(2) Refiners who have chosen, under subpart E of this part, to comply with the requirements of subpart E of this part on an aggregate basis, shall comply with the requirements of this subpart on the same aggregate basis.

(d) *Compliance determination.* (1)(i) The gasoline toxics performance requirements of this subpart apply to

gasoline produced at a refinery or imported by an importer during each calendar year starting January 1, 2002. The averaging period is January 1 through December 31 of each year.

(ii)(A) Beginning January 1, 2011, or January 1, 2015 for small refiners approved under § 80.1340, the gasoline toxics performance requirements of this subpart shall apply only to gasoline that is not subject to the benzene standard of § 80.1230, pursuant to the provisions of § 80.1235.

(B) The gasoline toxics performance requirements of this subpart shall not apply to gasoline produced by a refinery approved under § 80.1334, pursuant to § 80.1334(c).

(2) The annual average toxics value is calculated in accordance with § 80.825.

(e) *Deficit carryforward.* (1) A refinery or importer creates a toxics deficit, separately for reformulated gasoline and conventional gasoline, for a given averaging period, when—

(i) For conventional gasoline, its annual average toxics value is greater than the compliance baseline;

(ii) For reformulated gasoline and RBOB, combined, the annual average toxics value is less than the compliance baseline.

(2) In the calendar year following the year the toxics deficit is created, the refinery or importer shall:

(i) Achieve compliance with the refinery or importer toxics performance requirement specified in paragraph (a) of this section; and

(ii) Generate additional toxics credits sufficient to offset the toxics deficit of the previous year.

(f) *Credit carryforward.* (1) A refinery or importer generates toxics credits, separately for reformulated gasoline and conventional gasoline, for a given averaging period, when—

(i) For conventional gasoline, its annual average toxics value is less than the compliance baseline;

(ii) For reformulated gasoline and RBOB, combined, the annual average toxics value is greater than the compliance baseline.

(2) Toxics credits may be used to offset a toxics deficit in the calendar year following the year the credits are generated, provided the following criteria are met:

(i) Reformulated gasoline toxics credits are only to be used to offset a reformulated gasoline toxics deficit; conventional gasoline credits are only to be used to offset a conventional gasoline toxics deficit.

(ii) A refiner only offsets a toxics deficit at a refinery with toxics credits generated by that refinery.

(iii) Credits generated on an aggregate basis may only be used to offset a deficit calculated on an aggregate basis.

(iv) Credits used to offset a deficit from the previous year may not also be carried forward to the following year. Credits in excess of those used to offset a deficit from the previous year may be used to offset a deficit in the following year.

(v) Only toxics credits generated under this subpart may be used to offset a toxics deficit created under this subpart.

[66 FR 17263, Mar. 29, 2001, as amended at 72 FR 8544, Feb. 26, 2007]

§ 80.820 What gasoline is subject to the toxics performance requirements of this subpart?

For the purpose of this subpart, all reformulated gasoline, conventional gasoline and RBOB, collectively called ''gasoline'' unless otherwise specified, is subject to the requirements under this subpart, as applicable, with the following exceptions:

(a) Gasoline that is used to fuel aircraft, racing vehicles or racing boats that are used only in sanctioned racing events, provided that:

(1) Product transfer documents associated with such gasoline, and any pump stand from which such gasoline is dispensed, identify the gasoline either as gasoline that is restricted for use in aircraft, or as gasoline that is restricted for use in racing motor vehicles or racing boats that are used only in sanctioned racing events;

(2) The gasoline is completely segregated from all other gasoline throughout production, distribution and sale to the ultimate consumer; and

(3) The gasoline is not made available for use as motor vehicle gasoline, or dispensed for use in motor vehicles, except for motor vehicles used only in sanctioned racing events.

(b) Gasoline that is exported for sale outside the U.S.

(c) Gasoline designated as California gasoline under § 80.845, and used in California.

(d) Gasoline used in American Samoa, Guam and the Commonwealth of the Northern Mariana Islands.

(e) Gasoline exempt per § 80.995.

(f) Gasoline exempt per § 80.1000.

§ 80.825 How is the refinery or importer annual average toxics value determined?

(a) The refinery or importer annual average toxics value is calculated as follows:

$$T_a = \frac{\sum_{i=1}^{n} (V_i \times T_i)}{\sum_{i=1}^{n} V_i}$$

Where:

T_a = The refinery or importer annual average toxics value, as applicable.

V_i = The volume of applicable gasoline produced or imported in batch i.

T_i = The toxics value of batch i.

n = The number of batches of gasoline produced or imported during the averaging period.

i = Individual batch of gasoline produced or imported during the averaging period.

(b) The calculation specified in paragraph (a) of this section shall be made separately for each type of gasoline specified at § 80.815(b).

(c) The toxics value, T_i, of each batch of gasoline is determined using the Phase II Complex Model specified at § 80.45.

(1) The toxics value, T_i, of each batch of reformulated gasoline or RBOB, and the annual average toxics value, T_a, for reformulated gasoline and RBOB, combined, under this subpart are in percent reduction from the statutory baseline described in § 80.45(b) and volumes are in gallons.

(2) (i) The toxics value, T_i, of each batch of conventional gasoline, and the annual average toxics value, T_a, for conventional gasoline under this subpart are in milligrams per mile (mg/mile) and volumes are in gallons.

(ii) Any refiner for any refinery or importer that has received EPA approval of a petition submitted in accordance with the provisions of § 80.93(d) shall determine the toxics value, T_i, of each batch of conventional gasoline produced or imported for use in Alaska, and/or Hawaii, the Commonwealth of Puerto Rico, and the Virgin Islands in accordance with § 80.101(g)(1)(ii).

(d) All refinery or importer annual average toxics value calculations shall be conducted to two decimal places.

(e) A refiner or importer may include oxygenate added downstream from the refinery or import facility when calculating the toxics value, provided the following requirements are met:

(1) For oxygenate added to conventional gasoline, the refiner or importer shall comply with the requirements of § 80.101(d)(4)(ii).

(2) For oxygenate added to RBOB, the refiner or importer shall comply with the requirements of § 80.69(a).

(f) *Gasoline excluded*. Refiners and importers shall exclude from compliance calculations all of the following:

(1) Gasoline that was not produced at the refinery;

(2) In the case of an importer, gasoline that was imported as Certified Toxics-FRGAS under § 80.1030;

(3) Blending stocks transferred to others;

(4) Gasoline that has been included in the compliance calculations for another refinery or importer; and

(5) Gasoline exempted from standards under § 80.820.

[66 FR 17263, Mar. 29, 2001, as amended at 72 FR 60581, Oct. 25, 2007]

§ 80.830 What requirements apply to oxygenate blenders?

Oxygenate blenders who blend oxygenate into gasoline downstream of the refinery that produced the gasoline or the import facility where the gasoline was imported are not subject to the requirements of this subpart applicable to refiners for this gasoline.

§ 80.835 What requirements apply to butane blenders?

Butane blenders who blend butane into gasoline downstream of the refinery that produced the gasoline or the import facility where the gasoline was

imported are not subject to the requirements of this subpart applicable to refiners for this gasoline.

§ 80.840 What requirements apply to transmix processors?

Any transmix processor who produces gasoline or gasoline blendstock from transmix, or recovers gasoline or gasoline blendstock from transmix through transmix processing under § 80.84 (c) shall include such gasoline or gasoline blendstock in the baseline and compliance calculations of this subpart to the same extent such gasoline or gasoline blendstock must be included in compliance calculations under subpart D of this part for reformulated gasoline and RBOB, and under subpart E of this part for conventional gasoline, according to the requirements specified in § 80.84(c).

[71 FR 31964, June 2, 2006]

§ 80.845 What requirements apply to California gasoline?

(a) *Definition*. For purposes of this subpart ''California gasoline'' means any gasoline designated by the refiner or importer as for use in California.

(b) *California gasoline exemption*. California gasoline that complies with all the requirements of this section is exempt from all other provisions of this subpart.

(c) *Requirements for California gasoline*. (1) Each batch of California gasoline shall be designated as such by its refiner or importer.

(2) [Reserved]

(3) Designated California gasoline must ultimately be used in the State of California and not used elsewhere.

(4) In the case of California gasoline produced outside the State of California, the transferors and transferees shall meet the product transfer document requirements under § 80.81(g).

(5) Gasoline that is ultimately used in any part of the United States outside of the State of California shall comply with the standards and requirements of this subpart, regardless of any designation as California gasoline.

§ 80.850 How is the compliance baseline determined?

(a) The compliance baseline to which annual average toxics values are compared according to § 80.815(a) is calculated according to the following equation:

$$T_{CBase} = \frac{T_{Base} \times V_{Base} + T_{Exist} \times V_{inc}}{V_{Base} + V_{inc}}$$

Where:

T_{CBase} = Compliance baseline toxics value.

T_{Base} = Baseline toxics value for the refinery or importer, calculated according to § 80.915(b)(1).

V_{Base} = Baseline volume for the refinery or importer, calculated according to § 80.915(b)(2).

T_{Exist} = Existing toxics standard, per paragraph (b) of this section.

V_{inc} = Volume of gasoline produced during the averaging period in excess of V_{Base}.

(b) The value of existing toxics standard, T_{Exist}, is equal to:

(1) 21.5 percent, for reformulated gasoline and RBOB, combined;

(2) The refinery's or importer's anti-dumping compliance baseline value for exhaust toxics, in mg/mi, per § 80.101(f), for conventional gasoline.

(c) Any refiner for any refinery or importer with an approved anti-dumping baseline under § 80.93(d) for gasoline produced or imported for use in Alaska, and/or Hawaii, the Commonwealth of Puerto Rico, and the Virgin Islands, and for which a conventional gasoline baseline toxics value for such gasoline can be determined according to § 80.915(b)(1), shall determine its compliance baseline applicable to such gasoline according to the following equation:

$$T_{CBase} = \frac{T_{Base} \times V_{Base} + T_{Exist} \times V_{Inc} + T_{SBase} \times V_{SBase} + T_{SExist} \times V_{SInc} + T_{WBase} \times V_{WBase} + T_{WExist} \times V_{WInc}}{V_{Base} + V_{Inc} + V_{SBase} + V_{SInc} + V_{WBase} + V_{WInc}}$$

Where:

T_{CBase} = Compliance baseline toxics value.

T_{Base} = Baseline toxics value for the refinery or importer, calculated according to

§ 80.915(b)(1) for all gasoline except gasoline produced or imported for use in Alaska, Hawaii, the Commonwealth of Puerto Rico, and the Virgin Islands.

V_{Base} = Baseline volume for the refinery or importer, calculated according to § 80.915(b)(2) for all gasoline except gasoline produced or imported for use in Alaska, Hawaii, the Commonwealth of Puerto Rico, and the Virgin Islands.

T_{Exist} = The refinery's or importer's anti-dumping compliance baseline value for exhaust toxics, in mg/mi, per § 80.101(f) for all gasoline except gasoline produced or imported for use in Alaska, Hawaii, the Commonwealth of Puerto Rico, and the Virgin Islands.

V_{Inc} = Volume of gasoline produced or imported, excluding the volume of gasoline produced or imported for use in Alaska, Hawaii, the Commonwealth of Puerto Rico, and the Virgin Islands during the averaging period, which is in excess of V_{Base}.

T_{SBase} = Baseline toxics value for the refinery or importer, calculated according to § 80.915(e)(2)(i) for gasoline produce or imported for use in Hawaii, the Commonwealth of Puerto Rico, and the Virgin Islands.

V_{SBase} = Baseline volume for the refinery or importer, calculated according to § 80.915(e)(2)(ii) for gasoline produce or imported for use in Hawaii, the Commonwealth of Puerto Rico, and the Virgin Islands.

T_{SExist} = The refinery's or importer's anti-dumping compliance baseline value for exhaust toxics, in mg/mi, per § 80.101(f) for gasoline produce or imported for use in Hawaii, the Commonwealth of Puerto Rico, and the Virgin Islands.

V_{SInc} = Volume of gasoline produced or imported for use in Hawaii, the Commonwealth of Puerto Rico, and the Virgin Islands during the averaging period which is in excess of V_{SBase}.

T_{WBase} = Baseline toxics value for the refinery or importer, calculated according to § 80.915(e)(1)(i) for gasoline produce or imported for use in Alaska.

V_{WBase} = Baseline volume for the refinery or importer, calculated according to § 80.915(e)(1)(ii) for gasoline produce or imported for use in Alaska.

T_{WExist} = The refinery's or importer's anti-dumping compliance baseline value for exhaust toxics, in mg/mi, per § 80.101(f) for gasoline produce or imported for use in Alaska.

V_{WInc} = Volume of gasoline produced or imported for use in Alaska during the averaging period which is in excess of V_{WBase}.

(d) If the refinery or importer produced less gasoline during the compliance period than its applicable baseline volume, the value of V_{inc}, V_{SInc} or V_{WInc}, as applicable, will be zero.

[66 FR 17263, Mar. 29, 2001, as amended at 72 FR 60581, Oct. 25, 2007]

§ 80.855 What is the compliance baseline for refineries or importers with insufficient data?

(a) A refinery or importer shall use the methodology specified in this section for determining a compliance baseline if it cannot determine an applicable toxics value for every batch of gasoline produced or imported for 12 or more consecutive months during January 1, 1998 through December 31, 2000.

(b)(1) A refinery or importer that cannot determine an applicable toxics value on every batch of gasoline produced or imported for 12 or more consecutive months during the period January 1, 1998 through December 31, 2000 or a refinery or importer that did not produce or import reformulated gasoline and/or RBOB (combined) or conventional gasoline or both during the period between January 1, 1998 and December 31, 2000, inclusive, shall have the following as its compliance baseline for the purposes of this subpart:

(i) For conventional gasoline, prior to January 1, 2006, 94.64 mg/mile; starting January 1, 2006, 97.38 mg/mile.

(ii) For reformulated gasoline, prior to January 1, 2006, 25.31 percent reduction from statutory baseline; starting January 1, 2006, 26.78 percent reduction from statutory baseline.

(2)(i) A refinery or importer that has an approved anti-dumping baseline under § 80.93(d) for gasoline produced or imported for use in Alaska, and that cannot determine an applicable toxics value according to paragraph (b)(1) of this section, shall have the following as its compliance baseline for the purposes of this subpart: 110.72 mg/mile.

(ii) A refinery or importer that has an approved anti-dumping baseline under § 80.93(d) for gasoline produce or imported for use in Hawaii, the Commonwealth of Puerto Rico, and the Virgin Islands and that cannot determine an applicable toxics value according to paragraph (b)(1) of this section, shall have the following as its compliance baseline for the purposes of this subpart: 77.82 mg/mile.

(iii) The provisions of this paragraph (b)(2) shall apply to any refiner, for any refinery, or importer that received approval of a petition under § 80.93(d) prior to November 26, 2007 beginning with the 2008 annual averaging period.

(iv) Any new refiner or importer without a toxics baseline that produces or imports gasoline for use in Alaska, Hawaii, the Commonwealth of Puerto Rico or the Virgin Islands shall be subject to the applicable toxics default baseline under paragraph (b)(1) of this section unless the refiner or importer petitions for and receives approval of use of a seasonal baseline and seasonal Complex Model under § 80.93(d).

(c)(1) *Eligibility to petition.* A refiner who has been granted an alternative anti-dumping averaging period under § 80.101(k) may petition the Administrator to have the statutory baseline exhaust toxics emissions, Phase II value specified in § 80.91(c)(5)(iv) as its compliance baseline for the purposes of this subpart J for one or more of the years of the refiner's approved alternative anti-dumping averaging period.

(2) *Application process.* Applications must be submitted to the Administrator by January 1, 2004 to the following address: U.S. EPA—Attn: Anti-Dumping Compliance Period (6406J), 1200 Pennsylvania Avenue, NW., Washington, DC 20460 (certified mail/return receipt) or U.S. EPA—Attn: Anti-Dumping Compliance Period (6406J), Transportation & Regional Programs Division, 501 3rd Street, NW., Washington, DC 20001 (express mail/return receipt).

(3) *Contents of the application petition.* Each petition must include:

(i) A copy of the refinery's approval for an alternative averaging period under section 80.101(k).

(ii) A description of the hardships that make it infeasible, on a cost and/or technological basis, for the refinery to comply with the compliance baseline specified in paragraph (b) of this section.

(iii) A quarterly timeline, from the date of the application, indicating the expected exhaust toxics emissions performance of the refinery's conventional gasoline, and the reasons for any expected non-compliance with the compliance baseline specified in paragraph (b) of this section (for example, a particular gasoline blendstock-producing unit not yet installed). The timeline shall include the date by which the refinery will produce conventional gasoline that complies with the baseline specified in paragraph (b) of this section on an annual average basis.

(4) *Approval or disapproval of petitions.* (i) The Administrator may approve a petition if it includes information sufficient to demonstrate to the Administrator's satisfaction that cost and/or technological constraints make it infeasible for the refinery to comply with the baseline specified in paragraph (b) of this section. The Administrator will approve or deny a petition in writing within six months of receipt.

(ii)(A) Each approval will specify the date by which the refinery must comply with the baseline specified in paragraph (b) of this section. No petition approval shall allow for use of the statutory baseline exhaust toxics emissions, Phase II value as a refinery's compliance baseline under this subpart J beyond the last day of a refinery's alternative anti-dumping averaging period under § 80.101(k) or § 80.101(l).

(B) An approval may include any conditions or other requirements to which the approval is subject.

(5) *Effective date for petition.* (i) Beginning with the averaging period immediately following the end of the approved period under paragraph (c)(4) of this section, the compliance baseline for the purposes of this subpart J shall be as specified in paragraph (b) of this section.

(ii) Notwithstanding the requirement specified in paragraph (c)(5)(i) of this section, if at any time the alternative compliance period approved under § 80.101(k) or § 80.101(l) ceases to apply, the approval granted under this paragraph (c) shall also cease to apply.

[68 FR 24309, May 6, 2003, as amended at 70 FR 58335, Oct. 6, 2005; 72 FR 60582, Oct. 25, 2007]

§§ 80.860–80.905 [Reserved]

BASELINE DETERMINATION

§ 80.910 How does a refiner or importer apply for a toxics baseline?

(a)(1) A refiner or importer shall submit an application to EPA which includes the information required under paragraph (c) of this section no later than June 30, 2001, or 3 months prior to the first introduction of gasoline into commerce from the refinery or by the importer, whichever is later.

(2) A refiner or importer shall submit an application to EPA for the purposes of this subpart simultaneously with the submission of a petition under § 80.93(d).

(b) The toxics baseline request shall be sent to: U.S. EPA, Attn: Toxics Program (6406J), 1200 Pennsylvania Ave., NW, Washington, DC 20460. For commercial (non-postal) delivery: U.S. EPA, Attn: Toxics Program, 501 3rd Street NW, Washington, DC 20001.

(c) The toxics baseline application shall include the following information:

(1) A listing of the names and addresses of all refineries owned by the company for which the refiner is applying for a toxics baseline, or the name and address of the importer applying for a toxics baseline.

(2) For each refinery and importer—

(i) The baseline toxics value for each type of gasoline, per § 80.815(b), calculated in accordance with § 80.915;

(ii) The baseline toxics volume for each type of gasoline, per § 80.815(b), calculated in accordance with § 80.915;

(iii) For those with insufficient data pursuant to § 80.855, a statement that the refinery's or importer's baseline toxics value is the default compliance baseline specified at § 80.855(b), and that its baseline toxics volume is zero.

(3) A letter signed by the president, chief operating or chief executive officer, of the company, or his/her delegate, stating that the information contained in the toxics baseline determination is true to the best of his/her knowledge.

(4) Name, address, phone number, facsimile number and E-mail address of a company contact person.

(5) The following information for each batch of gasoline produced or imported during the period 1998–2000, separately for each type of gasoline listed at § 80.815(b):

(i) Batch number assigned to the batch under § 80.65(d) or § 80.101(i);

(ii) Volume; and

(iii) Applicable toxics value determined as specified at § 80.915(c).

(d) Foreign refiners shall follow the procedures specified in § 80.1030(b) to establish individual toxics baseline values for a foreign refinery.

(e) By October 31, 2001, or 4 months after the submission date, whichever is later, EPA will notify the submitter of approval of its toxics baseline.

(f) If at any time the baseline submitted in accordance with the requirements of this section is determined to be incorrect, the corrected baseline applies ab initio and the annual average toxics requirements are deemed to be those applicable under the corrected information.

[66 FR 17263, Mar. 29, 2001, as amended at 72 FR 60582, Oct. 25, 2007]

§ 80.915 How are the baseline toxics value and baseline toxics volume determined?

(a)(1) A refinery or importer shall use the methodology specified in this section for determining a baseline toxics value if it can determine an applicable toxics value for every batch of gasoline produced or imported for 12 or more consecutive months during January 1, 1998 through December 31, 2000.

(2) The determination in paragraph (a)(1) of this section is made separately for each type of gasoline listed at § 80.815(b) produced or imported between January 1, 1998 and December 31, 2000, inclusive.

(3) All consecutive and non-consecutive batch toxics measurements between January 1, 1998 and December 31, 2000, inclusive, are to be included in the baseline determination, unless the refinery or importer petitions EPA to exclude such data on the basis of data quality, per § 80.91(d)(6), and receives permission from EPA to exclude such data.

(b)(1) A refinery's or importer's baseline toxics value is calculated using the following equation:

$$T_{Base} = \frac{\sum_{i=1}^{n}(V_i \times T_i)}{\sum_{i=1}^{n} V_i} + M$$

Where:

T_{Base} = Baseline toxics value.

V_i = Volume of gasoline batch i produced or imported between January 1, 1998 and December 31, 2000, inclusive.

T_i = Toxics value of gasoline batch i produced or imported between January 1, 1998 and December 31, 2000, inclusive.

i = Individual batch of gasoline produced or imported between January 1, 1998 and December 31, 2000, inclusive.

n = Total number of batches of gasoline produced or imported between January 1, 1998 and December 31, 2000, inclusive.

M = Compliance margin.

(2) A refinery's or importer's baseline toxics volume is calculated using the following equation:

$$V_{base} = \frac{\sum_{i=1}^{n} V_i}{Y}$$

Where:

V_{base} = Baseline toxics volume.

V_i = Volume of gasoline batch i produced or imported between January 1, 1998 and December 31, 2000, inclusive.

i = Individual batch of gasoline produced or imported between January 1, 1998 and December 31, 2000, inclusive.

n = Total number of batches of gasoline produced or imported between January 1, 1998 and December 31, 2000, inclusive.

Y = Number of years between 1998 and 2000, inclusive, during some or all of which the refinery produced, or the importer imported, gasoline.

(c) The calculation specified in paragraph (b) of this section shall be made separately for each type of gasoline listed at § 80.815(b).

(d) The toxics value, T_i, of each batch of gasoline is determined using the Phase II Complex Model specified at § 80.45.

(1) The toxics value, T_i, of each batch of reformulated gasoline or RBOB, and the baseline toxics value, T_{Base}, for reformulated gasoline and RBOB, combined, under this subpart are in percent reduction from the statutory baseline defined in 40 CFR 80.45(b) and volumes are in gallons.

(2) The toxics value, T_i, of each batch of conventional gasoline, and the baseline toxics value, T_{Base}, for conventional gasoline under this subpart are in milligrams per mile (mg/mile) and volumes are in gallons.

(e)(1)(i) A refiner or importer which is approved for a petition submitted under § 80.910(a)(2) for gasoline produced or imported for use in Alaska shall calculate the applicable toxics baseline value using the following equation:

$$T_{WBase} = \frac{\sum_{i=1}^{n}(V_i \times T_i)}{\sum_{i=1}^{n} V_i} + M$$

Where:

T_{WBase} = Baseline toxics value for gasoline produced or imported for use in Alaska.

V_i = Volume of gasoline batch i produced or imported for use in Alaska between January 1, 1998 and December 31, 2000, inclusive.

T_i = Toxics value of gasoline batch i produced or imported for use in Alaska between January 1, 1998 and December 31, 2000, inclusive.

i = Individual batch of gasoline produced or imported for use in Alaska between January 1, 1998 and December 31, 2000, inclusive.

n = Total number of batches of gasoline produced or imported for use in Alaska between January 1, 1998 and December 31, 2000, inclusive.

M = Compliance margin.

(ii) The baseline volume associated with the baseline value calculated in paragraph (e)(1)(i) of this section shall be calculated using the methodology in paragraph (b)(2) of this section for the gasoline described in paragraph (e)(1)(i) of this section.

(2)(i) A refiner or importer which is approved for a petition submitted under § 80.910(a)(2) for gasoline produced or imported for use in Hawaii, the Commonwealth of Puerto Rico, and the Virgin Islands shall calculate the applicable toxics baseline value using the following equation:

$$T_{SBase} = \frac{\sum_{i=1}^{n}(V_i \times T_i)}{\sum_{i=1}^{n} V_i} + M$$

Where:

T_{SBase} = Baseline toxics value for gasoline produced or imported for use in Hawaii, the Commonwealth of Puerto Rico, and the Virgin Islands.

V_i = Volume of gasoline batch i produced or imported for use in Hawaii, the Commonwealth of Puerto Rico, and the Virgin Islands between January 1, 1998 and December 31, 2000, inclusive.

T_i= Toxics value of gasoline batch i produced or imported for use in Hawaii, the Commonwealth of Puerto Rico, and the Virgin Islands between January 1, 1998 and December 31, 2000, inclusive.

$_i$ = Individual batch of gasoline produced or imported for use in Hawaii, the Commonwealth of Puerto Rico, and the Virgin Islands between January 1, 1998 and December 31, 2000, inclusive.

n = Total number of batches of gasoline produced or imported for use in Hawaii, the Commonwealth of Puerto Rico, and the Virgin Islands between January 1, 1998 and December 31, 2000, inclusive.

M = Compliance margin.

(ii) The baseline volume associated with the baseline value calculated in paragraph (e)(2)(i) of this section shall be calculated using the methodology in paragraph (b)(2) of this section for the gasoline described in paragraph (e)(2)(i) of this section.

(f) All refinery or importer baseline toxics value calculations shall be conducted to two decimal places.

(g) Any refinery for which oxygenate blended downstream was included in compliance calculations for 1998–2000, pursuant to § 80.65 or § 80.101(d)(4), shall include this oxygenate in the baseline calculations for toxics value under paragraph (a) of this section.

(h) *Baseline adjustment.* (1) A toxics baseline determined differently than described in paragraphs (a) through (e) of this section may be allowed upon petition by the refiner or importer and approval by the Administrator or designee. The petition must be included with the baseline submittal under § 80.910.

(2) A toxics baseline adjustment petition shall, at minimum, be accompanied by:

(i) Unadjusted and adjusted baseline fuel parameters, applicable toxics values, and volumes; and

(ii) A narrative describing how the circumstances during 1998–2000 materially affected the baseline toxics value calculated under paragraph (a) of this section. The narrative shall also describe and show the calculations, and the reasoning supporting the calculations, used to determine the adjusted values.

(i) The compliance margin, M, that will be added to the toxics baseline calculated according to paragraph (a) of this section shall be equal to:

(1) −0.7% for reformulated gasoline or RBOB;

(2) 2.5 mg/mile for conventional gasoline.

[66 FR 17263, Mar. 29, 2001, as amended at 72 FR 60582, Oct. 25, 2007]

§§ 80.920–80.980 [Reserved]

RECORDKEEPING AND REPORTING REQUIREMENTS

§ 80.985 What records shall be kept?

(a) The recordkeeping requirements specified under § 80.74 applicable to refiners and importers of reformulated gasoline, RBOB and/or conventional gasoline apply under this subpart, however, duplicate records are not required.

(b) *Additional records that refiners and importers shall keep.* Beginning January 1, 2002, any refiner for each of its refineries, and any importer for the gasoline it imports, shall keep records that include the following information:

(1) The calculations used to determine the applicable compliance baseline under § 80.915.

(2) The calculations used to determine compliance with the applicable toxics requirements per § 80.815.

(3) A copy of all reports submitted to EPA under § 80.990, however, duplicate records are not required.

(c) *Additional records importers shall keep.* Any importer shall keep records that identify and verify the source of each batch of Certified Toxics-FRGAS

and Non-Certified Toxics-FRGAS imported and demonstrate compliance with the requirements for importers under § 80.1030(o).

(d) *Length of time records shall be kept.* The records required in this section shall be kept for five years from the date they were created.

(e) *Make records available to EPA.* On request by EPA the records required in paragraphs (a), (b) and (c) of this section shall be provided to the Administrator's authorized representative. For records that are electronically generated or maintained the equipment and software necessary to read the records shall be made available, or upon approval by EPA, electronic records shall be converted to paper documents which shall be provided to the Administrator's authorized representative.

§ 80.990 What are the toxics reporting requirements?

Beginning with the 2002 averaging period, and continuing for each averaging period thereafter, any refiner or importer shall submit to EPA the information required in this section, and such other information as EPA may require.

(a) *Refiner and importer annual reports.* Any refiner, for each of its refineries and/or aggregate(s) of refineries, and any importer for the gasoline it imports, shall:

(1) Include in its reformulated gasoline toxics emissions performance averaging report per § 80.75(e) the compliance baseline and incremental volume, V_{inc}, for its reformulated gasoline and RBOB, combined, per § 80.850.

(2) Include in its conventional gasoline report per § 80.105 the compliance baseline and incremental volume, V_{inc}, for its conventional gasoline per § 80.850.

(3) Exclude Certified Toxics-FRGAS under § 80.1030, if an importer.

(b) *Additional reporting requirements for importers.* Any importer shall report the following information for Toxics-FRGAS imported during the averaging period:

(1) The EPA refiner and refinery registration numbers of each foreign refiner and refinery where the Certified Toxics-FRGAS was produced; and

(2) The total gallons of Certified Toxics-FRGAS and Non-Certified Toxics-FRGAS imported from each foreign refiner and refinery.

EXEMPTIONS

§ 80.995 What if a refiner or importer is unable to produce gasoline conforming to the requirements of this subpart?

In appropriate extreme and unusual circumstances (e.g., natural disaster or Act of God) which are clearly outside the control of the refiner or importer and which could not have been avoided by the exercise of prudence, diligence, and due care, EPA may permit a refiner or importer, for a brief period, to not meet the requirements of this subpart, separately for reformulated gasoline (and RBOB, combined) and conventional gasoline, provided the refiner or importer meets all the criteria, requirements and conditions contained in § 80.73 (a) through (e).

§ 80.1000 What are the requirements for obtaining an exemption for gasoline used for research, development or testing purposes?

Gasoline used for research, development or testing purposes is exempt from the requirements of this subpart if it is exempted for these purposes under the reformulated and conventional gasoline programs, as applicable.

VIOLATION PROVISIONS

§ 80.1005 What acts are prohibited under the gasoline toxics program?

No person shall:

(a) *Averaging violation.* Produce or import gasoline subject to this subpart that does not comply with the applicable toxics requirement under § 80.815.

(b) *Causing an averaging use violation.* Cause another person to commit an act in violation of paragraph (a) of this section.

§ 80.1010 [Reserved]

§ 80.1015 Who is liable for violations under the gasoline toxics program?

(a) *Persons liable for violations of prohibited acts*—(1) *Averaging violation.* Any

person who violates § 80.1005(a) is liable for the violation.

(2) *Causing an averaging violation.* Any person who causes another party to violate § 80.1005(a), is liable for a violation of § 80.1005(b).

(3) *Parent corporation liability.* Any parent corporation is liable for any violations of this subpart that are committed by any of its wholly-owned subsidiaries.

(b) *Persons liable for failure to meet other provisions of this subpart.* (1) Any person who fails to meet a provision of this subpart not addressed in paragraph (a) of this section is liable for a violation of that provision.

(2) Any person who causes another party to fail to meet a requirement of this subpart not addressed in paragraph (a) of this section, is liable for causing a violation of that provision.

§ 80.1020 [Reserved]

§ 80.1025 What penalties apply under this subpart?

(a) Any person liable for a violation under § 80.1015 is subject to civil penalties as specified in sections 205 and 211(d) of the Clean Air Act for every day of each such violation and the amount of economic benefit or savings resulting from each violation.

(b) Any person liable under § 80.1015(a) for a violation of the applicable toxics requirements or causing another party to violate the requirements during any averaging period, is subject to a separate day of violation for each and every day in the averaging period.

(c) Any person liable under § 80.1015(b) for failure to meet, or causing a failure to meet, a provision of this subpart is liable for a separate day of violation for each and every day such provision remains unfulfilled.

PROVISIONS FOR FOREIGN REFINERS WITH INDIVIDUAL TOXICS BASELINES

§ 80.1030 What are the requirements for gasoline produced at foreign refineries having individual refiner toxics baselines?

(a) *Definitions.* (1) A *foreign refinery* is a refinery that is located outside the United States, the Commonwealth of Puerto Rico, the Virgin Islands, Guam, American Samoa, and the Commonwealth of the Northern Mariana Islands (collectively referred to in this section as ''the United States'').

(2) A *foreign refiner* is a person who meets the definition of refiner under § 80.2(i) for a foreign refinery.

(3) *Toxics-FRGAS* means gasoline produced at a foreign refinery that has been assigned an individual refinery toxics baseline under § 80.915 and that is imported into the U.S.

(4) *Non-Toxics-FRGAS* means gasoline that is produced at a foreign refinery that has not been assigned an individual refinery toxics baseline, gasoline produced at a foreign refinery with an individual refinery toxics baseline that is not imported into the United States, and gasoline produced at a foreign refinery with an individual toxics baseline during a year when the foreign refiner has opted to not participate in the Toxics-FRGAS program under paragraph (c)(3) of this section.

(5) *Certified Toxics-FRGAS* means Toxics-FRGAS the foreign refiner intends to include in the foreign refinery's toxics compliance calculations under § 80.825, and does include in these compliance calculations when reported to EPA.

(6) *Non-Certified Toxics-FRGAS* means Toxics-FRGAS that is not Certified Toxics-FRGAS.

(b) *Baseline establishment.* Any foreign refiner may submit a petition to the Administrator for an individual refinery toxics baseline pursuant to § 80.915 for all gasoline that was produced at the foreign refinery and imported into the United States between January 1, 1998 and December 31, 2000.

(1) The refiner shall follow the procedures specified in §§ 80.91 through 80.93 to establish an anti-dumping baseline, if it does not already have such a baseline.

(2) In making determinations for foreign refinery baselines, EPA will consider all information supplied by a foreign refiner, and in addition may rely on any and all appropriate assumptions necessary to make such determinations.

(3)(i) Where a foreign refiner submits a petition that is incomplete or inadequate to establish an accurate toxics baseline, and the refiner fails to cure

this defect after a request for more information, EPA will not assign an individual refinery toxics baseline.

(ii) If a foreign refiner does not already have an anti-dumping individual baseline per § 80.94, and if pursuant to § 80.94(b)(5) EPA does not assign an individual anti-dumping baseline, EPA will also not assign an individual refinery toxics baseline.

(c) *General requirements for foreign refiners with individual refinery toxics baselines.* A foreign refiner of a refinery that has been assigned an individual toxics baseline according to § 80.915 shall designate all gasoline produced at the foreign refinery that is exported to the United States as either Certified Toxics-FRGAS or as Non-Certified Toxics-FRGAS, except as provided in paragraph (c)(3) of this section.

(1) In the case of Certified Toxics-FRGAS, the foreign refiner shall meet all provisions that apply to refiners under this subpart J.

(2) In the case of Non-Certified Toxics-FRGAS, the foreign refiner shall meet all the following provisions, except the foreign refiner shall use the name Non-Certified Toxics-FRGAS instead of the names ''reformulated gasoline'' or ''RBOB'' wherever they appear in the following provisions:

(i) The designation requirements in this section.

(ii) The recordkeeping requirements under § 80.985.

(iii) The reporting requirements in § 80.990 and this section.

(iv) The product transfer document requirements in this section.

(v) The prohibitions in this section and § 80.1005.

(vi) The independent audit requirements under § 80.1035, paragraph (h) of this section, §§ 80.125 through 80.127, § 80.128(a), (b), (c), (g) through (i), and § 80.130.

(3)(i) Any foreign refiner that has been assigned an individual toxics baseline for a foreign refinery under § 80.915 may elect to classify no gasoline imported into the United States as Toxics-FRGAS, provided the foreign refiner notifies EPA of the election no later than November 1 of the prior calendar year.

(ii) An election under paragraph (c)(3)(i) of this section shall:

(A) Apply to an entire calendar year averaging period, and apply to all gasoline produced during the calendar year at the foreign refinery that is used in the United States; and

(B) Remain in effect for each succeeding calendar year averaging period, unless and until the foreign refiner notifies EPA of a termination of the election. The change in election shall take effect at the beginning of the next calendar year.

(4) In the case of information required under this section which would duplicate information submitted in accordance with § 80.94, the refiner may indicate that such information is also submitted in accordance with the requirements of this section. Duplicate submissions are not required.

(d) *Designation, product transfer documents, and foreign refiner certification.* (1) Any foreign refiner of a foreign refinery that has been assigned an individual toxics baseline shall designate each batch of Toxics-FRGAS as such at the time the gasoline is produced, unless the refiner has elected to classify no gasoline exported to the United States as Toxics-FRGAS under paragraph (c)(3)(i) of this section.

(2) On each occasion when any person transfers custody or title to any Toxics-FRGAS prior to its being imported into the United States, it shall include the following information as part of the product transfer document information in this section:

(i) Identification of the gasoline as Certified Toxics-FRGAS or as Non-Certified Toxics-FRGAS; and

(ii) The name and EPA refinery registration number of the refinery where the Toxics-FRGAS was produced.

(3) On each occasion when Toxics-FRGAS is loaded onto a vessel or other transportation mode for transport to the United States, the foreign refiner shall prepare a written verification for each batch of the Toxics-FRGAS that meets the following requirements:

(i) The verification shall include the report of the independent third party under paragraph (f) of this section, and the following additional information:

(A) The name and EPA registration number of the refinery that produced the Toxics-FRGAS;

(B) The identification of the gasoline as Certified Toxics-FRGAS or Non-Certified Toxics-FRGAS;

(C) The volume of Toxics-FRGAS being transported, in gallons;

(D) In the case of Certified Toxics-FRGAS:

(*1*) The toxics value as determined under paragraph (f) of this section; and

(*2*) A declaration that the Toxics-FRGAS is being included in the compliance calculations under § 80.825 for the refinery that produced the Toxics-FRGAS.

(ii) The verification shall be made part of the product transfer documents for the Toxics-FRGAS.

(e) *Transfers of Toxics-FRGAS to non-United States markets.* The foreign refiner is responsible to ensure that all gasoline classified as Toxics-FRGAS is imported into the United States. A foreign refiner may remove the Toxics-FRGAS classification, and the gasoline need not be imported into the United States, but only if:

(1)(i) The foreign refiner excludes:

(A) The volume of gasoline from the refinery's compliance calculations under § 80.825; and

(B) In the case of Certified Toxics-FRGAS, the volume and toxics value of the gasoline from the compliance calculations under § 80.825.

(ii) The exclusions under paragraph (e)(1)(i) of this section shall be on the basis of the toxics value and volumes determined under paragraph (f) of this section; and

(2) The foreign refiner obtains sufficient evidence in the form of documentation that the gasoline was not imported into the United States.

(f) *Load port independent sampling, testing and refinery identification.* (1) On each occasion Toxics-FRGAS is loaded onto a vessel for transport to the United States a foreign refiner shall have an independent third party:

(i) Inspect the vessel prior to loading and determine the volume of any tank bottoms;

(ii) Determine the volume of Toxics-FRGAS loaded onto the vessel (exclusive of any tank bottoms present before vessel loading);

(iii) Obtain the EPA-assigned registration number of the foreign refinery;

(iv) Determine the name and country of registration of the vessel used to transport the Toxics-FRGAS to the United States; and

(v) Determine the date and time the vessel departs the port serving the foreign refinery.

(2) On each occasion Certified Toxics-FRGAS is loaded onto a vessel for transport to the United States a foreign refiner shall have an independent third party:

(i) Collect a representative sample of the Certified Toxics-FRGAS from each vessel compartment subsequent to loading on the vessel and prior to departure of the vessel from the port serving the foreign refinery;

(ii) Prepare a volume-weighted vessel composite sample from the compartment samples, and determine the value for toxics using the methodology specified in § 80.730 by:

(A) The third party analyzing the sample; or

(B) The third party observing the foreign refiner analyze the sample;

(iii) Review original documents that reflect movement and storage of the Certified Toxics-FRGAS from the refinery to the load port, and from this review determine:

(A) The refinery at which the Toxics-FRGAS was produced; and

(B) That the Toxics-FRGAS remained segregated from:

(*1*) Non-Toxics-FRGAS and Non-Certified Toxics-FRGAS; and

(2) Other Certified Toxics-FRGAS produced at a different refinery.

(3) The independent third party shall submit a report:

(i) To the foreign refiner containing the information required under paragraphs (f)(1) and (2) of this section, to accompany the product transfer documents for the vessel; and

(ii) To the Administrator containing the information required under paragraphs (f)(1) and (2) of this section, within thirty days following the date of the independent third party's inspection. This report shall include a description of the method used to determine the identity of the refinery at which the gasoline was produced, assurance that the gasoline remained segregated as specified in paragraph (n)(1) of this section, and a description

of the gasoline's movement and storage between production at the source refinery and vessel loading.

(4) The independent third party shall:

(i) Be approved in advance by EPA, based on a demonstration of ability to perform the procedures required in this paragraph (f);

(ii) Be independent under the criteria specified in § 80.65(e)(2)(iii); and

(iii) Sign a commitment that contains the provisions specified in paragraph (i) of this section with regard to activities, facilities and documents relevant to compliance with the requirements of this paragraph (f).

(g) *Comparison of load port and port of entry testing.* (1)(i) Except as described in paragraph (g)(1)(ii) of this section, any foreign refiner and any United States importer of Certified Toxics-FRGAS shall compare the results from the load port testing under paragraph (f) of this section, with the port of entry testing as reported under paragraph (o) of this section, for the volume of gasoline and the toxics value.

(ii) Where a vessel transporting Certified Toxics-FRGAS off loads this gasoline at more than one United States port of entry, and the conditions of paragraph (g)(2)(i) of this section are met at the first United States port of entry, the requirements of paragraph (g)(2) of this section do not apply at subsequent ports of entry if the United States importer obtains a certification from the vessel owner, that meets the requirements of paragraph (s) of this section, that the vessel has not loaded any gasoline or blendstock between the first United States port of entry and the subsequent port of entry.

(2)(i) The requirements of this paragraph (g)(2) apply if:

(A) The temperature-corrected volumes determined at the port of entry and at the load port differ by more than one percent; or

(B) The toxics value determined at the port of entry is higher than the toxics value determined at the load port, and the amount of this difference is greater than the reproducibility amount specified for the port of entry test result by the American Society of Testing and Materials (ASTM).

(ii) The United States importer and the foreign refiner shall treat the gasoline as Non-Certified Toxics-FRGAS, and the foreign refiner shall exclude the gasoline volume and properties from its gasoline toxics compliance calculations under § 80.825.

(h) *Attest requirements.* The following additional procedures shall be carried out by any foreign refiner of Toxics-FRGAS as part of the applicable attest engagement for each foreign refinery under § 80.1035:

(1) The inventory reconciliation analysis under § 80.128(b) and the tender analysis under § 80.128(c) shall include Non-Toxics-FRGAS in addition to the gasoline types listed in § 80.128(b) and (c).

(2) Obtain separate listings of all tenders of Certified Toxics-FRGAS, and of Non-Certified Toxics-FRGAS. Agree the total volume of tenders from the listings to the gasoline inventory reconciliation analysis in § 80.128(b), and to the volumes determined by the third party under paragraph (f)(1) of this section.

(3) For each tender under paragraph (h)(2) of this section where the gasoline is loaded onto a marine vessel, report as a finding the name and country of registration of each vessel, and the volumes of Toxics-FRGAS loaded onto each vessel.

(4) Select a sample from the list of vessels identified in paragraph (h)(3) of this section used to transport Certified Toxics-FRGAS, in accordance with the guidelines in § 80.127, and for each vessel selected perform the following:

(i) Obtain the report of the independent third party, under paragraph (f) of this section, and of the United States importer under paragraph (o) of this section.

(A) Agree the information in these reports with regard to vessel identification, gasoline volumes and test results.

(B) Identify, and report as a finding, each occasion the load port and port of entry parameter and volume results differ by more than the amounts allowed in paragraph (g) of this section, and determine whether the foreign refiner adjusted its refinery calculations as required in paragraph (g) of this section.

(ii) Obtain the documents used by the independent third party to determine

transportation and storage of the Certified Toxics-FRGAS from the refinery to the load port, under paragraph (f) of this section. Obtain tank activity records for any storage tank where the Certified Toxics-FRGAS is stored, and pipeline activity records for any pipeline used to transport the Certified Toxics-FRGAS, prior to being loaded onto the vessel. Use these records to determine whether the Certified Toxics-FRGAS was produced at the refinery that is the subject of the attest engagement, and whether the Certified Toxics-FRGAS was mixed with any Non-Certified Toxics-FRGAS, Non-Toxics-FRGAS, or any Certified Toxics-FRGAS produced at a different refinery.

(5) Select a sample from the list of vessels identified in paragraph (h)(3) of this section used to transport Certified and Non-Certified Toxics-FRGAS, in accordance with the guidelines in § 80.127, and for each vessel selected perform the following:

(i) Obtain a commercial document of general circulation that lists vessel arrivals and departures, and that includes the port and date of departure of the vessel, and the port of entry and date of arrival of the vessel.

(ii) Agree the vessel's departure and arrival locations and dates from the independent third party and United States importer reports to the information contained in the commercial document.

(6) Obtain separate listings of all tenders of Non-Toxics-FRGAS, and perform the following:

(i) Agree the total volume of tenders from the listings to the gasoline inventory reconciliation analysis in § 80.128(b).

(ii) Obtain a separate listing of the tenders under this paragraph (h)(6) where the gasoline is loaded onto a marine vessel. Select a sample from this listing in accordance with the guidelines in § 80.127, and obtain a commercial document of general circulation that lists vessel arrivals and departures, and that includes the port and date of departure and the ports and dates where the gasoline was off loaded for the selected vessels. Determine and report as a finding the country where the gasoline was off loaded for each vessel selected.

(7) In order to complete the requirements of this paragraph (h) an auditor shall:

(i) Be independent of the foreign refiner;

(ii) Be licensed as a Certified Public Accountant in the United States and a citizen of the United States, or be approved in advance by EPA based on a demonstration of ability to perform the procedures required in §§ 80.125 through 80.130 and this paragraph (h); and

(iii) Sign a commitment that contains the provisions specified in paragraph (i) of this section with regard to activities and documents relevant to compliance with the requirements of §§ 80.125 through 80.130, § 80.1035 and this paragraph (h).

(i) *Foreign refiner commitments.* Any foreign refiner shall commit to and comply with the provisions contained in this paragraph (i) as a condition to being assigned an individual refinery toxics baseline.

(1) Any United States Environmental Protection Agency inspector or auditor will be given full, complete and immediate access to conduct inspections and audits of the foreign refinery.

(i) Inspections and audits may be either announced in advance by EPA, or unannounced.

(ii) Access will be provided to any location where:

(A) Gasoline is produced;

(B) Documents related to refinery operations are kept;

(C) Gasoline or blendstock samples are tested or stored; and

(D) Toxics-FRGAS is stored or transported between the foreign refinery and the United States, including storage tanks, vessels and pipelines.

(iii) Inspections and audits may be by EPA employees or contractors to EPA.

(iv) Any documents requested that are related to matters covered by inspections and audits will be provided to an EPA inspector or auditor on request.

(v) Inspections and audits by EPA may include review and copying of any documents related to:

(A) Refinery baseline establishment, including the volume and toxics value,

and transfers of title or custody, of any gasoline or blendstocks, whether Toxics-FRGAS or Non-toxics-FRGAS, produced at the foreign refinery during the period January 1, 1998 through the date of the refinery baseline petition or through the date of the inspection or audit if a baseline petition has not been approved, and any work papers related to refinery baseline establishment;

(B) The volume and toxics value of Toxics-FRGAS;

(C) The proper classification of gasoline as being Toxics-FRGAS or as not being Toxics-FRGAS, or as Certified Toxics-FRGAS or as Non-Certified Toxics-FRGAS;

(D) Transfers of title or custody to Toxics-FRGAS;

(E) Sampling and testing of Toxics-FRGAS;

(F) Work performed and reports prepared by independent third parties and by independent auditors under the requirements of this section and § 80.1035 including work papers; and

(G) Reports prepared for submission to EPA, and any work papers related to such reports.

(vi) Inspections and audits by EPA may include taking samples of gasoline or blendstock, and interviewing employees.

(vii) Any employee of the foreign refiner will be made available for interview by the EPA inspector or auditor, on request, within a reasonable time period.

(viii) English language translations of any documents will be provided to an EPA inspector or auditor, on request, within 10 working days.

(ix) English language interpreters will be provided to accompany EPA inspectors and auditors, on request.

(2) An agent for service of process located in the District of Columbia will be named, and service on this agent constitutes service on and personal and subject matter jurisdiction in the United States over the foreign refiner or any employee of the foreign refiner for any action by EPA or otherwise by the United States related to the requirements of this subpart J.

(3) A foreign refiner shall be subject to civil liability for violations of this section, sections 114, 202(l), 211, and 301(a) of the Clean Air Act, as amended (42 U.S.C. 7414, 7521(l), 7545 and 7601(a)), and all other applicable laws or regulations and shall be subject to the provisions thereof. The Administrator may assess a penalty against a foreign refiner for any violation of this section by a foreign refiner, in the manner set forth in sections 205(c) of the CAA, 42 U.S.C. 7524(c) or commence a civil action against a foreign refiner to assess and recover a civil penalty in the manner set forth in section 205(b) of the CAA, 42 U.S.C. 7524(b). A FR shall be subject to criminal liability for violations of this section, section 113(c)(2) of the CAA, 42 U.S.C. 7413(c)(2), 18 U.S.C. 1001 and all other applicable provisions and shall be subject to the provisions thereof.

(4) United States substantive and procedural laws shall apply to any civil or criminal enforcement action against the foreign refiner or any employee of the foreign refiner related to the provisions of this section.

(5) Submitting a petition for an individual refinery toxics baseline, producing and exporting gasoline under an individual refinery toxics baseline, and all other actions to comply with the requirements of this subpart J relating to the establishment and use of an individual refinery toxics baseline constitute actions or activities that satisfy the provisions of 28 U.S.C. 1605(a)(2), but solely with respect to actions instituted against the foreign refiner, its agents and employees in any court or other tribunal in the United States for conduct that violates the requirements applicable to the foreign refiner under this subpart J, including conduct that violates Title 18 U.S.C. section 1001 and Clean Air Act section 113(c)(2).

(6) The foreign refiner, or its agents or employees, will not seek to detain or to impose civil or criminal remedies against EPA inspectors or auditors, whether EPA employees or EPA contractors, for actions performed within the scope of EPA employment related to the provisions of this section.

(7) The commitment required by this paragraph (i) shall be signed by the owner or president of the foreign refiner business.

(8) In any case where Toxics-FRGAS produced at a foreign refinery is stored or transported by another company between the refinery and the vessel that transports the Toxics-FRGAS to the United States, the foreign refiner shall obtain from each such other company a commitment that meets the requirements specified in paragraphs (i)(1) through (7) of this section, and these commitments shall be included in the foreign refiner's baseline petition.

(j) *Sovereign immunity*. By submitting a petition for an individual foreign refinery baseline under this section, or by producing and exporting gasoline to the United States under an individual refinery toxics baseline under this section, the foreign refiner, its agents and employees, without exception, become subject to the full operation of the administrative and judicial enforcement powers and provisions of the United States without limitation based on sovereign immunity, with respect to actions instituted against the foreign refiner, its agents and employees in any court or other tribunal in the United States for conduct that violates the requirements applicable to the foreign refiner under this subpart J, including conduct that violates Title 18 U.S.C. section 1001 and Clean Air Act section 113(c)(2).

(k) *Bond posting*. Any foreign refiner shall meet the requirements of this paragraph (k) as a condition to being assigned an individual refinery toxics baseline.

(1) The foreign refiner shall annually post a bond of the amount calculated using the following equation:

$$\text{Bond} = G \times \$\,0.01 - \text{Bond}_{CG}$$

Where:

Bond = amount of the bond in U. S. dollars.

G = the largest volume of gasoline produced at the foreign refinery and exported to the United States, in gallons, during a single calendar year among the five preceding calendar years.

Bond_{CG} = amount of bond currently posted by the refinery pursuant to § 80.94.

(2) Bonds shall be posted by:

(i) Paying the amount of the bond to the Treasurer of the United States;

(ii) Obtaining a bond in the proper amount from a third party surety agent that is payable to satisfy United States administrative or judicial judgments against the foreign refiner, provided EPA agrees in advance as to the third party and the nature of the surety agreement; or

(iii) An alternative commitment that results in assets of an appropriate liquidity and value being readily available to the United States, provided EPA agrees in advance as to the alternative commitment.

(3) If the bond amount for a foreign refinery increases, the foreign refiner shall increase the bond to cover the shortfall within 90 days of the date the bond amount changes. If the bond amount decreases, the foreign refiner may reduce the amount of the bond beginning 90 days after the date the bond amount changes.

(4) Bonds posted under this paragraph (k) shall:

(i) Be used to satisfy any judicial or administrative judgment, order, assessment or payment under a judicial or administrative settlement agreement that results from an administrative or judicial enforcement action for conduct in violation of this subpart J, including where such conduct violates Title 18 U.S.C. section 1001 and Clean Air Act section 113(c)(2);

(ii) Be provided by a corporate surety that is listed in the United States Department of Treasury Circular 570 ''Companies Holding Certificates of Authority as Acceptable Sureties on Federal Bonds'; and

(iii) Include a commitment that the bond will remain in effect for at least five (5) years following the end of latest averaging period that the foreign refiner produces gasoline pursuant to the requirements of this subpart J.

(5) On any occasion a foreign refiner bond is used to satisfy any judgment or other obligation, the foreign refiner shall increase the bond to cover the amount used within 90 days of the date the bond is used.

(6) The bond is used for payment of, not in lieu of, any obligation arising under any judgment, order, assessment or settlement agreement. Nothing herein is intended to waive any portion of any obligation except what portion is actually paid by use of funds from the bond.

(l) [Reserved]

(m) *English language reports.* Any report or other document submitted to EPA by a foreign refiner shall be in English language, or shall include an English language translation.

(n) *Prohibitions.* (1) No person may combine Certified Toxics-FRGAS with any Non-Certified Toxics-FRGAS or Non-Toxics-FRGAS, and no person may combine Certified Toxics-FRGAS with any Certified Toxics-FRGAS produced at a different refinery, until the importer has met all the requirements of paragraph (o) of this section, except as provided in paragraph (e) of this section.

(2) No foreign refiner or other person may cause another person to commit an action prohibited in paragraph (n)(1) of this section, or that otherwise violates the requirements of this section.

(o) *United States importer requirements.* Any United States importer shall meet the following requirements:

(1) Each batch of imported gasoline shall be classified by the importer as being Toxics-FRGAS or as Non-Toxics-FRGAS, and each batch classified as Toxics-FRGAS shall be further classified as Certified Toxics-FRGAS or as Non-Certified Toxics-FRGAS.

(2) Gasoline shall be classified as Certified Toxics-FRGAS or as Non-Certified Toxics-FRGAS according to the designation by the foreign refiner if this designation is supported by product transfer documents prepared by the foreign refiner as required in paragraph (d) of this section, unless the gasoline is classified as Non-Certified Toxics-FRGAS under paragraph (g) of this section.

(3) For each gasoline batch classified as Toxics-FRGAS, any United States importer shall perform the following procedures:

(i) In the case of both Certified and Non-Certified Toxics-FRGAS, have an independent third party:

(A) Determine the volume of gasoline in the vessel;

(B) Use the foreign refiner's Toxics-FRGAS certification to determine the name and EPA-assigned registration number of the foreign refinery that produced the Toxics-FRGAS;

(C) Determine the name and country of registration of the vessel used to transport the Toxics-FRGAS to the United States; and

(D) Determine the date and time the vessel arrives at the United States port of entry.

(ii) In the case of Certified Toxics-FRGAS, have an independent third party:

(A) Collect a representative sample from each vessel compartment subsequent to the vessel's arrival at the United States port of entry and prior to off loading any gasoline from the vessel;

(B) Prepare a volume-weighted vessel composite sample from the compartment samples; and

(C) Determine the toxics value using the methodologies specified in § 80.730, by:

(*1*) The third party analyzing the sample; or

(*2*) The third party observing the importer analyze the sample.

(4) Any importer shall submit reports within thirty days following the date any vessel transporting Toxics-FRGAS arrives at the United States port of entry:

(i) To the Administrator containing the information determined under paragraph (o)(3) of this section; and

(ii) To the foreign refiner containing the information determined under paragraph (o)(3)(ii) of this section.

(5) Any United States importer shall meet the requirements specified in § 80.815 for any imported gasoline that is not classified as Certified Toxics-FRGAS under paragraph (o)(2) of this section.

(p) *Truck Imports of Certified Toxics-FRGAS produced at a Refinery* (1) Any refiner whose Certified Toxics-FRGAS is transported into the United States by truck may petition EPA to use alternative procedures to meet the following requirements:

(i) Certification under paragraph (d)(5) of this section;

(ii) Load port and port of entry sampling and testing under paragraphs (f) and (g) of this section;

(iii) Attest under paragraph (h) of this section; and

(iv) Importer testing under paragraph (o)(3) of this section.

(2) These alternative procedures shall ensure Certified Toxics-FRGAS remains segregated from Non-Certified Toxics-FRGAS and from Non-Toxics-FRGAS until it is imported into the United States. The petition will be evaluated based on whether it adequately addresses the following:

(i) Provisions for monitoring pipeline shipments, if applicable, from the refinery, that ensure segregation of Certified Toxics-FRGAS from that refinery from all other gasoline;

(ii) Contracts with any terminals and/or pipelines that receive and/or transport Certified Toxics-FRGAS, that prohibit the commingling of Certified Toxics-FRGAS with any of the following:

(A) Other Certified Toxics-FRGAS from other refineries.

(B) All Non-Certified Toxics-FRGAS.

(C) All Non-Toxics-FRGAS;

(iii) Procedures for obtaining and reviewing truck loading records and United States import documents for Certified Toxics-FRGAS to ensure that such gasoline is only loaded into trucks making deliveries to the United States;

(iv) Attest procedures to be conducted annually by an independent third party that review loading records and import documents based on volume reconciliation, or other criteria, to confirm that all Certified Toxics-FRGAS remains segregated throughout the distribution system and is only loaded into trucks for import into the United States.

(3) The petition required by this section shall be submitted to EPA along with the application for small refiner status and individual refinery toxics baseline and standards under § 80.240 and this section.

(q) *Withdrawal or suspension of a foreign refinery's baseline.* EPA may withdraw or suspend a baseline that has been assigned to a foreign refinery where:

(1) A foreign refiner fails to meet any requirement of this section;

(2) A foreign government fails to allow EPA inspections as provided in paragraph (i)(1) of this section;

(3) A foreign refiner asserts a claim of, or a right to claim, sovereign immunity in an action to enforce the requirements in this subpart J; or

(4) A foreign refiner fails to pay a civil or criminal penalty that is not satisfied using the foreign refiner bond specified in paragraph (k) of this section.

(r) *Early use of a foreign refinery baseline.* (1) A foreign refiner may begin using an individual refinery baseline before EPA has approved the baseline, provided that:

(i) A baseline petition has been submitted as required in paragraph (b) of this section;

(ii) EPA has made a provisional finding that the baseline petition is complete;

(iii) The foreign refiner has made the commitments required in paragraph (i) of this section;

(iv) The persons who will meet the independent third party and independent attest requirements for the foreign refinery have made the commitments required in paragraphs (f)(3)(iii) and (h)(7)(iii) of this section; and

(v) The foreign refiner has met the bond requirements of paragraph (k) of this section.

(2) In any case where a foreign refiner uses an individual refinery baseline before final approval under paragraph (r)(1) of this section, and the foreign refinery baseline values that ultimately are approved by EPA are more stringent than the early baseline values used by the foreign refiner, the foreign refiner shall recalculate its compliance, ab initio, using the baseline values approved by EPA, and the foreign refiner shall be liable for any resulting violation of the gasoline toxics requirements.

(s) *Additional requirements for petitions, reports and certificates.* Any petition for a refinery baseline under § 80.915, any alternative procedures under paragraph (r) of this section, any report or other submission required by paragraph (c), (f)(2), or (i) of this section, and any certification under paragraph (d)(3) of this section shall be:

(1) Submitted in accordance with procedures specified by the Administrator, including use of any forms that may be specified by the Administrator.

(2) Be signed by the president or owner of the foreign refiner company, or by that person's immediate designee, and shall contain the following declaration:

I hereby certify: (1) That I have actual authority to sign on behalf of and to bind [insert name of foreign refiner] with regard to all statements contained herein; (2) that I am aware that the information contained herein is being certified, or submitted to the United States Environmental Protection Agency, under the requirements of 40 CFR Part 80, subpart J, and that the information is material for determining compliance under these regulations; and (3) that I have read and understand the information being certified or submitted, and this information is true, complete and correct to the best of my knowledge and belief after I have taken reasonable and appropriate steps to verify the accuracy thereof.

I affirm that I have read and understand the provisions of 40 CFR Part 80, subpart J, including 40 CFR 80.1030 [insert name of foreign refiner]. Pursuant to Clean Air Act section 113(c) and Title 18, United States Code, section 1001, the penalty for furnishing false, incomplete or misleading information in this certification or submission is a fine of up to $10,000, and/or imprisonment for up to five years.

ATTEST ENGAGEMENTS

§ 80.1035 What are the attest engagement requirements for gasoline toxics compliance applicable to refiners and importers?

In addition to the requirements for attest engagements that apply to refiners and importers under §§ 80.125 through 80.130, and § 80.1030, the attest engagements for refiners and importers applicable to this subpart J shall include the following procedures and requirements each year, which should be applied separately to reformulated gasoline (and RBOB, combined) and conventional gasoline:

(a) Obtain the EPA toxics baseline approval letter for the refinery to determine the refinery's applicable baseline toxics value and baseline toxics volume under § 80.915.

(b) Obtain a written representation from the company representative stating the toxics value(s) that the company used as its baseline(s) and agree that number to paragraph (a) of this section.

(c) Obtain and read a copy of the refinery's or importer's annual toxics reports per §§ 1A80.75(e) and 80.105 filed with EPA for the year to determine the compliance baseline and incremental volume.

(d) Agree the yearly volume of gasoline reported to EPA in the toxics reports with the inventory reconciliation analysis under § 80.128.

(e) Calculate the annual average toxics value level for each type of gasoline specified at § 80.815(b) and agree the applicable values with the values reported to EPA.

(f) Calculate the difference between the yearly volume of gasoline reported to EPA and the baseline volume, if applicable, to determine the yearly incremental volume and agree that value with the value reported to EPA.

(g) Calculate the compliance baseline per § 80.850, and agree that value with the value reported to EPA.

(h) Beginning January 1, 2011, or January 1, 2015 for small refiners approved per § 80.1340, the requirements of this section shall apply only to gasoline that is not subject to the benzene standard of § 80.1230, pursuant to the provisions of § 80.1235.

[66 FR 17263, Mar. 29, 2001, as amended at 72 FR 8544, Feb. 26, 2007]

§ 80.1040 [Reserved]

ADDITIONAL RULEMAKING

§ 80.1045 What additional rulemaking will EPA conduct?

No later than July 1, 2003, the Administrator shall propose any requirements to control hazardous air pollutants from motor vehicles and motor vehicle fuels that the Administrator determines are appropriate pursuant to section 202(l)(2) of the Act. The Administrator will take final action on such proposal no later than July 1, 2004. During this rulemaking, EPA also intends to evaluate emissions and potential strategies relating to hazardous air pollutants from nonroad engines and vehicles.

Subpart K—Renewable Fuel Standard

§ 80.1100 How is the statutory default requirement for 2006 implemented?

(a) *Definitions.* For calendar year 2006, the definitions of section 80.2 and the following additional definitions apply to this section.

(1) *Renewable fuel.* (i) *Renewable fuel* means motor vehicle fuel that is used to replace or reduce the quantity of fossil fuel present in a fuel mixture used to operate a motor vehicle, and which:

(A) Is produced from grain, starch, oil seeds, vegetable, animal, or fish materials including fats, greases, and oils, sugarcane, sugar beets, sugar components, tobacco, potatoes, or other biomass; or

(B) Is natural gas produced from a biogas source, including a landfill, sewage waste treatment plant, feedlot, or other place where decaying organic material is found.

(ii) The term ''renewable fuel'' includes cellulosic biomass ethanol, waste derived ethanol, biodiesel, and any blending components derived from renewable fuel.

(2) *Cellulosic biomass ethanol* means ethanol derived from any lignocellulosic or hemicellulosic matter that is available on a renewable or recurring basis, including dedicated energy crops and trees, wood and wood residues, plants, grasses, agricultural residues, fibers, animal wastes and other waste materials, and municipal solid waste. The term also includes any ethanol produced in facilities where animal wastes or other waste materials are digested or otherwise used to displace 90 percent or more of the fossil fuel normally used in the production of ethanol.

(3) *Waste derived ethanol* means ethanol derived from animal wastes, including poultry fats and poultry wastes, and other waste materials, or municipal solid waste.

(4) *Small refinery* means a refinery for which the average aggregate daily crude oil throughput for a calendar year (as determined by dividing the aggregate throughput for the calendar year by the number of days in the calendar year) does not exceed 75,000 barrels.

(5) *Biodiesel* means a diesel fuel substitute produced from nonpetroleum renewable resources that meets the registration requirements for fuels and fuel additives established by the Environmental Protection Agency under section 211 of the Clean Air Act. It includes biodiesel derived from animal wastes (including poultry fats and poultry wastes) and other waste materials, or biodiesel derived from municipal solid waste and sludges and oils derived from wastewater and the treatment of wastewater.

(b) *Renewable Fuel Standard for 2006.* The percentage of renewable fuel in the total volume of gasoline sold or dispensed to consumers in 2006 in the United States shall be a minimum of 2.78 percent on an annual average volume basis.

(c) *Responsible parties.* Parties collectively responsible for attainment of the standard in paragraph (b) of this section are refiners (including blenders) and importers of gasoline. However, a party that is a refiner only because he owns or operates a small refinery is exempt from this responsibility.

(d) *EPA determination of attainment.* EPA will determine after the close of 2006 whether or not the requirement in paragraph (b) of this section has been met. EPA will base this determination on information routinely published by the Energy Information Administration on the annual domestic volume of gasoline sold or dispensed to U.S. consumers and of ethanol produced for use in such gasoline, supplemented by readily available information concerning the use in motor fuel of other renewable fuels such as cellulosic biomass ethanol, waste derived ethanol, biodiesel, and other non-ethanol renewable fuels.

(1) The renewable fuel volume will equal the sum of all renewable fuel volumes used in motor fuel, provided that:

(i) One gallon of cellulosic biomass ethanol or waste derived ethanol shall be considered to be the equivalent of 2.5 gallons of renewable fuel; and

(ii) Only the renewable fuel portion of blending components derived from renewable fuel shall be counted towards the renewable fuel volume.

(2) If the nationwide average volume percent of renewable fuel in gasoline in 2006 is equal to or greater than the standard in paragraph (b) of this section, the standard has been met.

(e) *Consequence of nonattainment in 2006*. In the event that EPA determines that the requirement in paragraph (b) of this section has not been attained in 2006, a deficit carryover volume shall be added to the renewable fuel volume obligation for 2007 for use in calculating the standard applicable to gasoline in 2007.

(1) The deficit carryover volume shall be calculated as follows:

$$DC = Vgas * (Rs - Ra)$$

Where:

DC = Deficit carryover, in gallons, of renewable fuel.

Vgas = Volume of gasoline sold or dispensed to U.S. consumers in 2006, in gallons.

Rs = 0.0278.

Ra = Ratio of renewable fuel volume divided by total gasoline volume determined in accordance with paragraph (d)(2) of this section.

(2) There shall be no other consequence of failure to attain the standard in paragraph (b) of this section in 2006 for any of the parties in paragraph (c) of this section.

[72 FR 23991, May 1, 2007]

§80.1101 Definitions.

The definitions of §80.2 and the following additional definitions apply for the purposes of this subpart. For calendar year 2007 and beyond, the definitions in this section §80.1101 supplant those in §80.1100.

(a) *Cellulosic biomass ethanol* means either of the following:

(1) Ethanol derived from any lignocellulosic or hemicellulosic matter that is available on a renewable or recurring basis and includes any of the following:

(i) Dedicated energy crops and trees.

(ii) Wood and wood residues.

(iii) Plants.

(iv) Grasses.

(v) Agricultural residues.

(vi) Animal wastes and other waste materials, the latter of which may include waste materials that are residues (e.g., residual tops, branches, and limbs from a tree farm).

(vii) Municipal solid waste.

(2) Ethanol made at facilities at which animal wastes or other waste materials are digested or otherwise used onsite to displace 90 percent or more of the fossil fuel that is combusted to produce thermal energy integral to the process of making ethanol, by:

(i) The direct combustion of the waste materials or a byproduct resulting from digestion of such waste materials (e.g., methane from animal wastes) to make thermal energy; and/or

(ii) The use of waste heat captured from an off-site combustion process as a source of thermal energy.

(b) *Waste derived ethanol* means ethanol derived from either of the following:

(1) Animal wastes, including poultry fats and poultry wastes, and other waste materials.

(2) Municipal solid waste.

(c) *Biogas* means methane or other hydrocarbon gas produced from decaying organic material, including landfills, sewage waste treatment plants, and animal feedlots.

(d) *Renewable fuel*. (1) *Renewable fuel* is any motor vehicle fuel that is used to replace or reduce the quantity of fossil fuel present in a fuel mixture used to fuel a motor vehicle, and is produced from any of the following:

(i) Grain.

(ii) Starch.

(iii) Oilseeds.

(iv) Vegetable, animal, or fish materials including fats, greases, and oils.

(v) Sugarcane.

(vi) Sugar beets.

(vii) Sugar components.

(viii) Tobacco.

(ix) Potatoes.

(x) Other biomass.

(xi) Natural gas produced from a biogas source, including a landfill, sewage waste treatment plant, feedlot, or other place where there is decaying organic material.

(2) The term ''Renewable fuel'' includes cellulosic biomass ethanol, waste derived ethanol, biodiesel (monoalkyl ester), non-ester renewable diesel, and blending components derived from renewable fuel.

(3) Ethanol covered by this definition shall be denatured as required and defined in 27 CFR parts 20 and 21. Any volume of denaturant in ethanol in excess of 5 volume percent shall not be included in the volume of ethanol for purposes of determining compliance with the requirements under this subpart.

(4) Small volume additives (excluding denaturants) less than 1.0 percent of the total volume of a renewable fuel shall be counted as part of the total renewable fuel volume.

(5) A fuel produced by a renewable fuel producer that is used in boilers or heaters is not a motor vehicle fuel and therefore is not a renewable fuel.

(e) *Blending component* has the same meaning as ''Gasoline blending stock, blendstock, or component'' as defined at § 80.2(s), for which the portion that can be counted as renewable fuel is calculated as set forth in § 80.1115(a).

(f) *Motor vehicle* has the meaning given in Section 216(2) of the Clean Air Act (42 U.S.C. 7550).

(g) *Small refinery* means a refinery for which the average aggregate daily crude oil throughput for the calendar year 2004 (as determined by dividing the aggregate throughput for the calendar year by the number of days in the calendar year) does not exceed 75,000 barrels.

(h) *Biodiesel (mono-alkyl ester)* means a motor vehicle fuel or fuel additive which is all the following:

(1) Registered as a motor vehicle fuel or fuel additive under 40 CFR part 79.

(2) A mono-alkyl ester.

(3) Meets ASTM D–6751–07, entitled ''Standard Specification for Biodiesel Fuel Blendstock (B100) for Middle Distillate Fuels.'' ASTM D–6751–07 is incorporated by reference. This incorporation by reference was approved by the Director of the Federal Register in accordance with 5 U.S.C. 552(a) and 1 CFR part 51. A copy may be obtained from the American Society for Testing and Materials, 100 Barr Harbor Drive, West Conshohocken, Pennsylvania. A copy may be inspected at the EPA Docket Center, Docket No. EPA–HQ–OAR–2005–0161, EPA/DC, EPA West, Room 3334, 1301 Constitution Ave., NW., Washington, DC, or at the National Archives and Records Administration (NARA). For information on the availability of this material at NARA, call 202–741–6030, or go to: *http://www.archives.gov/federal-register/cfr/ibr-locations.html*.

(4) Intended for use in engines that are designed to run on conventional diesel fuel.

(5) Derived from nonpetroleum renewable resources (as defined in paragraph (m) of this section).

(i) *Non-ester renewable diesel* means a motor vehicle fuel or fuel additive which is all the following:

(1) Registered as a motor vehicle fuel or fuel additive under 40 CFR part 79.

(2) Not a mono-alkyl ester.

(3) Intended for use in engines that are designed to run on conventional diesel fuel.

(4) Derived from nonpetroleum renewable resources (as defined in paragraph (m) of this section).

(j) *Renewable crude* means biologically derived liquid feedstocks including but not limited to poultry fats, poultry wastes, vegetable oil, and greases that are used as feedstocks to make gasoline or diesel fuels at production units as specified in paragraph (k) of this section.

(k) *Renewable crude-based fuels* are renewable fuels that are gasoline or diesel products resulting from the processing of renewable crudes in production units within refineries or at dedicated facilities within refineries, that process petroleum based feedstocks and which make gasoline and diesel fuel.

(l) *Importers*. For the purposes of this subpart only, an importer of gasoline or renewable fuel is:

(1) Any person who brings gasoline or renewable fuel into the 48 contiguous states of the United States from a foreign country or from an area that has not opted in to the program requirements of this subpart pursuant to § 80.1143; and

(2) Any person who brings gasoline or renewable fuel into an area that has opted in to the program requirements of this subpart pursuant to § 80.1143.

(m) *Nonpetroleum renewable resources* include, but are not limited to the following:

(1) Plant oils.

(2) Animal fats and animal wastes, including poultry fats and poultry wastes, and other waste materials.

(3) Municipal solid waste and sludges and oils derived from wastewater and the treatment of wastewater.

(n) *Export of renewable fuel* means:

(1) Transfer of a batch of renewable fuel to a location outside the United States; and

(2) Transfer of a batch of renewable fuel from a location in the contiguous 48 states to Alaska, Hawaii, or a United States territory, unless that state or territory has received an approval from the Administrator to opt-in to the renewable fuel program pursuant to § 80.1143.

(o) *Renewable Identification Number (RIN)*, is a unique number generated to represent a volume of renewable fuel pursuant to §§ 80.1125 and 80.1126.

(1) *Gallon-RIN* is a RIN that represents an individual gallon of renewable fuel; and

(2) *Batch-RIN* is a RIN that represents multiple gallon-RINs.

(p) *Neat renewable fuel* is a renewable fuel to which only de minimus amounts of conventional gasoline or diesel have been added.

[72 FR 23992, May 1, 2007, as amended at 73 FR 57254, Oct. 2, 2008]

§§ 80.1102–80.1103 [Reserved]

§ 80.1104 What are the implementation dates for the Renewable Fuel Standard Program?

The RFS standards and other requirements of § 80.1101 and all sections following are effective beginning on September 1, 2007.

[72 FR 23993, May 1, 2007]

§ 80.1105 What is the Renewable Fuel Standard?

(a) The annual value of the renewable fuel standard for 2007 shall be 4.02 percent.

(b) Beginning with the 2008 compliance period, EPA will calculate the value of the annual standard and publish this value in the FEDERAL REGISTER by November 30 of the year preceding the compliance period.

(c) EPA will base the calculation of the standard on information provided by the Energy Information Administration regarding projected gasoline volumes and projected volumes of renewable fuel expected to be used in gasoline blending for the upcoming year.

(d) EPA will calculate the annual renewable fuel standard using the following equation:

$$\mathrm{RFStd_i} = 100 * \frac{\mathrm{RFV_i} - \mathrm{Cell_i}}{(\mathrm{G_i} - \mathrm{R_i}) + (\mathrm{GS_i} - \mathrm{RS_i}) - \mathrm{GE_i}}$$

Where:

$\mathrm{RFStd_i}$ = Renewable Fuel Standard, in year i, in percent.

$\mathrm{RFV_i}$ = Nationwide annual volume of renewable fuels required by section 211(o)(2)(B) of the Act (42 U.S.C. 7545), for year i, in gallons.

$\mathrm{G_i}$ = Amount of gasoline projected to be used in the 48 contiguous states, in year i, in gallons.

$\mathrm{R_i}$ = Amount of renewable fuel blended into gasoline that is projected to be used in the 48 contiguous states, in year i, in gallons.

$\mathrm{GS_i}$ = Amount of gasoline projected to be used in noncontiguous states or territories (if the state or territory opts-in), in year i, in gallons.

$\mathrm{RS_i}$ = Amount of renewable fuel blended into gasoline that is projected to be used in noncontiguous states or territories (if the state or territory opts-in), in year i, in gallons.

$\mathrm{GE_i}$ = Amount of gasoline projected to be produced by exempt small refineries and small refiners, in year i, in gallons (through 2010 only, except to the extent that a small refinery exemption is extended pursuant to § 80.1141(e)).

$\mathrm{Cell_i}$ = Beginning in 2013, the amount of renewable fuel that is required to come from cellulosic sources, in year i, in gallons.

(e) Beginning with the 2013 compliance period, EPA will calculate the value of the annual cellulosic standard and publish this value in the FEDERAL REGISTER by November 30 of the year preceding the compliance period.

(f) EPA will calculate the annual cellulosic standard using the following equation:

$$RFCell_i = 100 * \frac{Cell_i}{(G_i - R_i) + (GS_i - RS_i)}$$

Where:

$RFCell_i$ = Renewable Fuel Cellulosic Standard in year i, in percent.

G_i = Amount of gasoline projected to be used in the 48 contiguous states, in year i, in gallons.

R_i = Amount of renewable fuel blended into gasoline that is projected to be used in the 48 contiguous states, in year i, in gallons.

GS_i = Amount of gasoline projected to be used in noncontiguous states or territories (if the state or territory opts-in), in year i, in gallons.

RS_i = Amount of renewable fuel blended into gasoline that is projected to be used in noncontiguous states or territories (if the state or territory opts-in), in year i, in gallons.

$Cell_i$ = Amount of renewable fuel that is required to come from cellulosic sources, in year i, in gallons.

[72 FR 23993, May 1, 2007]

§ 80.1106 To whom does the Renewable Volume Obligation apply?

(a) (1) An obligated party is a refiner that produces gasoline within the 48 contiguous states, or an importer that imports gasoline into the 48 contiguous states. A party that simply adds renewable fuel to gasoline, as defined in § 80.1107(c), is not an obligated party.

(2) If the Administrator approves a petition of Alaska, Hawaii, or a United States territory to opt-in to the renewable fuel program under the provisions in § 80.1143, then ''obligated party'' shall also include any refiner that produces gasoline within that state or territory, or any importer that imports gasoline into that state or territory.

(3) For the purposes of this section, ''gasoline'' refers to any and all of the products specified at § 80.1107(c).

(b) For each compliance period starting with 2007, any obligated party is required to demonstrate, pursuant to § 80.1127, that it has satisfied the Renewable Volume Obligation for that compliance period, as specified in § 80.1107(a).

(c) An obligated party may comply with the requirements of paragraph (b) of this section for all of its refineries in the aggregate, or for each refinery individually.

(d) An obligated party must comply with the requirements of paragraph (b) of this section for all of its imported gasoline in the aggregate.

(e) An obligated party that is both a refiner and importer must comply with the requirements of paragraph (b) of this section for its imported gasoline separately from gasoline produced by its refinery or refineries.

(f) Where a refinery or importer is jointly owned by two or more parties, the requirements of paragraph (b) of this section may be met by one of the joint owners for all of the gasoline produced at the refinery, or all of the imported gasoline, in the aggregate, or each party may meet the requirements of paragraph (b) of this section for the portion of the gasoline that it owns, as long as all of the gasoline produced at the refinery, or all of the imported gasoline, is accounted for in determining the renewable fuels obligation under § 80.1107.

(g) The requirements in paragraph (b) of this section apply to the following compliance periods:

(1) For 2007, the compliance period is September 1 through December 31.

(2) Beginning in 2008, and every year thereafter, the compliance period is January 1 through December 31.

[72 FR 23993, May 1, 2007]

§ 80.1107 How is the Renewable Volume Obligation calculated?

(a) The Renewable Volume Obligation for an obligated party is determined according to the following formula:

$$RVO_i = (RFStd_i * GV_i) + D_{i-1}$$

Where:

RVO_i = The Renewable Volume Obligation for an obligated party for calendar year i, in gallons of renewable fuel.

$RFStd_i$ = The renewable fuel standard for calendar year i, determined by EPA pursuant to § 80.1105, in percent.

GV_i = The non-renewable gasoline volume, determined in accordance with paragraphs (b), (c), and (d) of this section, which is produced or imported by the obligated party in calendar year i, in gallons.

D_{i-1} = Renewable fuel deficit carryover from the previous year, per § 80.1127(b), in gallons.

(b) The non-renewable gasoline volume for a refiner, blender, or importer for a given year, GV_i, specified in paragraph (a) of this section is calculated as follows:

$$GV_i = \sum_{x=1}^{n} G_x - \sum_{y=1}^{m} RB_y$$

Where:

x = Individual batch of gasoline produced or imported in calendar year i.

n = Total number of batches of gasoline produced or imported in calendar year i.

G_X = Volume of batch x of gasoline produced or imported, in gallons.

y = Individual batch of renewable fuel blended into gasoline in calendar year i.

m = Total number of batches of renewable fuel blended into gasoline in calendar year i.

RB_y = Volume of batch y of renewable fuel blended into gasoline, in gallons.

(c) All of the following products that are produced or imported during a compliance period, collectively called ''gasoline'' for purposes of this section (unless otherwise specified), are to be included (but not double-counted) in the volume used to calculate a party's renewable volume obligation under paragraph (a) of this section, except as provided in paragraph (d) of this section:

(1) Reformulated gasoline, whether or not renewable fuel is later added to it.

(2) Conventional gasoline, whether or not renewable fuel is later added to it.

(3) Reformulated gasoline blendstock that becomes finished reformulated gasoline upon the addition of oxygenate (''RBOB'').

(4) Conventional gasoline blendstock that becomes finished conventional gasoline upon the addition of oxygenate (''CBOB'').

(5) Blendstock (including butane and gasoline treated as blendstock (''GTAB'')) that has been combined with other blendstock and/or finished gasoline to produce gasoline.

(6) Any gasoline, or any unfinished gasoline that becomes finished gasoline upon the addition of oxygenate, that is produced or imported to comply with a state or local fuels program.

(d) The following products are not included in the volume of gasoline produced or imported used to calculate a party's renewable volume obligation under paragraph (a) of this section:

(1) Any renewable fuel as defined in § 80.1101(d).

(2) Blendstock that has not been combined with other blendstock or finished gasoline to produce gasoline.

(3) Gasoline produced or imported for use in Alaska, Hawaii, the Commonwealth of Puerto Rico, the U.S. Virgin Islands, Guam, American Samoa, and the Commonwealth of the Northern Marianas, unless the area has opted into the RFS program under § 80.1143.

(4) Gasoline produced by a small refinery that has an exemption under § 80.1141 or an approved small refiner that has an exemption under § 80.1142 until January 1, 2011 (or later, for small refineries, if their exemption is extended pursuant to § 80.1141(e)).

(5) Gasoline exported for use outside the 48 United States, and gasoline exported for use outside Alaska, Hawaii, the Commonwealth of Puerto Rico, the U.S. Virgin Islands, Guam, American Samoa, and the Commonwealth of the Northern Marianas, if the area has opted into the RFS program under § 80.1143.

(6) For blenders, the volume of finished gasoline, RBOB, or CBOB to which a blender adds blendstocks.

(7) The gasoline portion of transmix produced by a transmix processor, or the transmix blended into gasoline by a transmix blender, under 40 CFR 80.84.

[72 FR 23993, May 1, 2007, as amended at 73 FR 57255, Oct. 2, 2008]

§§ 80.1108–80.1114 [Reserved]

§ 80.1115 How are equivalence values assigned to renewable fuel?

(a)(1) Each gallon of a renewable fuel shall be assigned an equivalence value by the producer or importer pursuant to paragraph (b) or (c) of this section.

(2) The equivalence value is a number that is used to determine how many gallon-RINs can be generated for a batch of renewable fuel according to § 80.1126.

(b) Equivalence values shall be assigned for certain renewable fuels as follows:

(1) Cellulosic biomass ethanol and waste derived ethanol produced on or

before December 31, 2012 which is denatured shall have an equivalence value of 2.5.

(2) Ethanol other than cellulosic biomass ethanol or waste-derived ethanol which is denatured shall have an equivalence value of 1.0.

(3) Biodiesel (mono-alkyl ester) shall have an equivalence value of 1.5.

(4) Butanol shall have an equivalence value of 1.3.

(5) Non-ester renewable diesel, including that produced from coprocessing a renewable crude with fossil fuels in a hydrotreater, shall have an equivalence value of 1.7.

(6) All other renewable crude-based renewable fuels shall have an equivalence value of 1.0.

(c)(1) For renewable fuels not listed in paragraph (b) of this section, a producer or importer shall submit an application to the Agency for an equivalence value following the provisions of paragraph (d) of this section.

(2) A producer or importer may also submit an application for an alternative equivalence value pursuant to paragraph (d) of this section if the renewable fuel is listed in paragraph (b) of this section, but the producer or importer has reason to believe that a different equivalence value than that listed in paragraph (b) of this section is warranted.

(d) *Determination of equivalence values.* (1) Except as provided in paragraph (d)(4) of this section, the equivalence value for renewable fuels described in paragraph (c) of this section shall be calculated using the following formula:

$$EV = (R / 0.931) * (EC / 77{,}550)$$

Where:

EV = Equivalence Value for the renewable fuel, rounded to the nearest tenth.

R = Renewable content of the renewable fuel. This is a measure of the portion of a renewable fuel that came from a renewable source, expressed as a percent, on an energy basis.

EC = Energy content of the renewable fuel, in Btu per gallon (lower heating value).

(2) The application for an equivalence value shall include a technical justification that includes a description of the renewable fuel, feedstock(s) used to make it, and the production process.

(3) The Agency will review the technical justification and assign an appropriate Equivalence Value to the renewable fuel based on the procedure in this paragraph (d).

(4) For biogas, the Equivalence Value is 1.0, and 77,550 Btu of biogas is equivalent to 1 gallon of renewable fuel.

[72 FR 23995, May 1, 2007]

§§ 80.1116–80.1124 [Reserved]

§ 80.1125 Renewable Identification Numbers (RINs).

Each RIN is a 38 character numeric code of the following form:

KYYYYCCCCFFFFFBBBBBRRDSS SSSSSSEEEEEEEE

(a) K is a number identifying the type of RIN as follows:

(1) K has the value of 1 when the RIN is assigned to a volume of renewable fuel pursuant to §§ 80.1126(e) and 80.1128(a).

(2) K has the value of 2 when the RIN has been separated from a volume of renewable fuel pursuant to § 80.1126(e)(4) or § 80.1129.

(b) YYYY is the calendar year in which the batch of renewable fuel was produced or imported. YYYY also represents the year in which the RIN was originally generated.

(c) CCCC is the registration number assigned according to § 80.1150 to the producer or importer of the batch of renewable fuel.

(d) FFFFF is the registration number assigned according to § 80.1150 to the facility at which the batch of renewable fuel was produced or imported.

(e) BBBBB is a serial number assigned to the batch which is chosen by the producer or importer of the batch such that no two batches have the same value in a given calendar year.

(f) RR is a number representing the equivalence value of the renewable fuel as specified in § 80.1115 and multiplied by 10 to produce the value for RR.

(g) D is a number identifying the type of renewable fuel, as follows:

(1) D has the value of 1 if the renewable fuel can be categorized as cellulosic biomass ethanol as defined in § 80.1101(a).

(2) D has the value of 2 if the renewable fuel cannot be categorized as cellulosic biomass ethanol as defined in § 80.1101(a).

(h) SSSSSSSS is a number representing the first gallon-RIN associated with a batch of renewable fuel.

(i) EEEEEEEE is a number representing the last gallon-RIN associated with a batch of renewable fuel. EEEEEEEE will be identical to SSSSSSSS if the batch-RIN represents a single gallon-RIN. Assign the value of EEEEEEEE as described in § 80.1126.

[72 FR 23995, May 1, 2007]

§ 80.1126 How are RINs generated and assigned to batches of renewable fuel by renewable fuel producers or importers?

(a) *Regional applicability*. (1) Except as provided in paragraph (b) of this section, a batch RIN must be generated by a renewable fuel producer or importer for every batch of renewable fuel produced by a facility located in the contiguous 48 states of the United States, or imported into the contiguous 48 states.

(2) If the Administrator approves a petition of Alaska, Hawaii, or a United States territory to opt-in to the renewable fuel program under the provisions in § 80.1143, then the requirements of paragraph (a)(1) of this section shall also apply to renewable fuel produced or imported into that state or territory beginning in the next calendar year.

(b) *Volume threshold*. Renewable fuel producers located within the United States that produce less than 10,000 gallons of renewable fuel each year, and importers that import less than 10,000 gallons of renewable fuel each year, are not required to generate and assign RINs to batches of renewable fuel. Such producers and importers are also exempt from the registration, reporting, and recordkeeping requirements of §§ 80.1150–80.1152, and the attest engagement requirements of § 80.1164. However, for such producers and importers that voluntarily generate and assign RINs, all the requirements of this subpart apply.

(c) *Definition of batch*. For the purposes of this section and § 80.1125, a ''batch of renewable fuel'' is a volume of renewable fuel that has been assigned a unique RIN code BBBBB within a calendar year by the producer or importer of the renewable fuel in accordance with the provisions of this section and § 80.1125.

(1) The number of gallon-RINs generated for a batch of renewable fuel may not exceed 99,999,999.

(2) A batch of renewable fuel cannot represent renewable fuel produced or imported in excess of one calendar month.

(d) *Generation of RINs*. (1) Except as provided in paragraph (b) of this section, the producer or importer of a batch of renewable fuel must generate a batch-RIN for that batch, including any renewable fuel contained in imported gasoline.

(2) A producer or importer of renewable fuel may generate RINs for volumes of renewable fuel that it owns on September 1, 2007.

(3) A party generating a RIN shall specify the appropriate numerical values for each component of the RIN in accordance with the provisions of § 80.1125 and this paragraph (d).

(4) Except as provided in paragraph (d)(6) of this section, the number of gallon-RINs that shall be generated for a given batch of renewable fuel shall be equal to a volume calculated according to the following formula:

$$V_{RIN} = EV * V_s$$

Where:

V_{RIN} = RIN volume, in gallons, for use determining the number of gallon-RINs that shall be generated.

EV = Equivalence value for the renewable fuel per § 80.1115.

V_s = Standardized volume of the batch of renewable fuel at 60 °F, in gallons, calculated in accordance with paragraph (d)(7) of this section.

(5) Multiple gallon-RINs generated to represent a given volume of renewable fuel can be represented by a single batch-RIN through the appropriate designation of the RIN volume codes SSSSSSSS and EEEEEEEE.

(i) The value of SSSSSSSS in the batch-RIN shall be 00000001 to represent the first gallon-RIN associated with the volume of renewable fuel.

(ii) The value of EEEEEEEE in the batch-RIN shall represent the last gallon-RIN associated with the volume of renewable fuel, based on the RIN volume determined pursuant to paragraph (d)(4) of this section.

(6) (i) For renewable crude-based renewable fuels produced in a facility or unit that coprocesses renewable crudes and fossil fuels, the number of gallon-RINs that shall be generated for a given batch of renewable fuel shall be equal to the gallons of renewable crude used rather than the gallons of renewable fuel produced.

(ii) Parties that produce renewable crude-based renewable fuels in a facility or unit that coprocesses renewable crudes and fossil fuels may submit a petition to the Agency requesting the use of volumes of renewable fuel produced as the basis for the number of gallon-RINs, pursuant to paragraph (d)(4) of this section.

(7) *Standardization of volumes.* In determining the standardized volume of a batch of renewable fuel for purposes of generating RINs under this paragraph (d), the batch volumes shall be adjusted to a standard temperature of 60 °F.

(i) For ethanol, the following formula shall be used:

$$V_{s,e} = V_{a,e} * (-0.0006301 * T + 1.0378)$$

Where:

$V_{s,e}$ = Standardized volume of ethanol at 60 °F, in gallons.
$V_{a,e}$ = Actual volume of ethanol, in gallons.
T = Actual temperature of the batch, in °F.

(ii) For biodiesel (mono alkyl esters), the following formula shall be used:

$$V_{s,b} = V_{a,b} * (-0.0008008 * T + 1.0480)$$

Where:

$V_{s,b}$ = Standardized volume of biodiesel at 60 °F, in gallons.
$V_{a,b}$ = Actual volume of biodiesel, in gallons.
T = Actual temperature of the batch, in °F.

(iii) For other renewable fuels, an appropriate formula commonly accepted by the industry shall be used to standardize the actual volume to 60 °F. Formulas used must be reported to the Agency, and may be reviewed for appropriateness.

(8) (i) A party is prohibited from generating RINs for a volume of renewable fuel that it produces if:

(A) The renewable fuel has been produced from a chemical conversion process that uses another renewable fuel as a feedstock; and

(B) The renewable fuel used as a feedstock was produced by another party.

(ii) Any RINs that the party acquired with renewable fuel used as a feedstock shall be assigned to the new renewable fuel that was made with that feedstock.

(e) *Assignment of RINs to batches.* (1) Except as provided in paragraph (e)(4) of this section, the producer or importer of renewable fuel must assign all RINs generated to volumes of renewable fuel.

(2) A RIN is assigned to a volume of renewable fuel when ownership of the RIN is transferred along with the transfer of ownership of the volume of renewable fuel, pursuant to § 80.1128(a).

(3) All assigned RINs shall have a K code value of 1.

(4) *RINs not assigned to batches.* (i) If a party produces or imports a batch of cellulosic biomass ethanol or waste-derived ethanol having an equivalence value of 2.5, that party must assign at least one gallon-RIN to each gallon of cellulosic biomass ethanol or waste-derived ethanol, representing the first 1.0 portion of the Equivalence Value.

(ii) Any remaining gallon-RINs generated for the cellulosic biomass ethanol or waste-derived ethanol which represent the remaining 1.5 portion of the Equivalence Value may remain unassigned.

(iii) The producer or importer of cellulosic biomass ethanol or waste-derived ethanol shall designate the K code as 2 for all unassigned RINs.

[72 FR 23995, May 1, 2007, as amended at 73 FR 57255, Oct. 2, 2008]

§ 80.1127 How are RINs used to demonstrate compliance?

(a) *Renewable volume obligations.* (1) Except as specified in paragraph (b) of this section, each party that is obligated to meet the Renewable Volume Obligation under § 80.1107, or each party that is an exporter of renewable fuels that is obligated to meet a Renewable Volume Obligation under § 80.1130, must demonstrate pursuant to § 80.1152(a)(1) that it has taken ownership of sufficient RINs to satisfy the following equation:

$$(\Sigma RINNUM)_i + (\Sigma RINNUM)_{i-1} = RVO_i$$

Where:

$(\Sigma RINNUM)_i$ = Sum of all owned gallon-RINs that were generated in year i and are being applied towards the RVO_i, in gallons.

$(\Sigma RINNUM)_{i-1}$ = Sum of all owned gallon-RINs that were generated in year i−1 and are being applied towards the RVO_i, in gallons.

RVO_i = The Renewable Volume Obligation for the obligated party or renewable fuel exporter for calendar year i, in gallons, pursuant to §80.1107 or §80.1130.

(2) For compliance for calendar years 2008 and later, the value of $(\Sigma RINNUM)_{i-1}$ may not exceed a value determined by the following inequality:

$$(\Sigma RINNUM)_{i-1} \leq 0.20 \times RVO_i$$

(3) RINs may only be used to demonstrate compliance with the RVO for the calendar year in which they were generated or the following calendar year. RINs used to demonstrate compliance in one year cannot be used to demonstrate compliance in any other year.

(4) A party may only use a RIN for purposes of meeting the requirements of paragraphs (a)(1) and (a)(2) of this section if that RIN is an unassigned RIN with a K code of 2 obtained in accordance with §§80.1126(e)(4), 80.1128, and 80.1129.

(5) The number of gallon-RINs associated with a given batch-RIN that can be used for compliance with the RVO shall be calculated from the following formula:

$$RINNUM = EEEEEEEE - SSSSSSSS + 1$$

Where:

RINNUM = Number of gallon-RINs associated with a batch-RIN, where each gallon-RIN represents one gallon of renewable fuel for compliance purposes.

EEEEEEEE = Batch-RIN component identifying the last gallon-RIN associated with the batch-RIN.

SSSSSSSS = Batch-RIN component identifying the first gallon-RIN associated with the batch-RIN.

(b) *Deficit carryovers.* (1) An obligated party or an exporter of renewable fuel that fails to meet the requirements of paragraphs (a)(1) or (a)(2) of this section for calendar year i is permitted to carry a deficit into year i+1 under the following conditions:

(i) The party did not carry a deficit into calendar year i from calendar year i−1.

(ii) The party subsequently meets the requirements of paragraph (a)(1) of this section for calendar year i+1 and carries no deficit into year i+2.

(2) A deficit is calculated according to the following formula:

$$D_i = RVO_i - [(\Sigma RINNUM)_i + (\Sigma RINNUM)_{i-1}]$$

Where:

D_i = The deficit, in gallons, generated in calendar year i that must be carried over to year i+1 if allowed to do so pursuant to paragraph (b)(1)(i) of this section.

RVO_i = The Renewable Volume Obligation for the obligated party or renewable fuel exporter for calendar year i, in gallons.

$(\Sigma RINNUM)_i$ = Sum of all acquired gallon-RINs that were generated in year i and are being applied towards the RVO_i, in gallons.

$(\Sigma RINNUM)_{i-1}$ = Sum of all acquired gallon-RINs that were generated in year i-1 and are being applied towards the RVO_i, in gallons.

[72 FR 23995, May 1, 2007, as amended at 73 FR 57255, Oct. 2, 2008; 73 FR 71560, Nov. 25, 2008]

§80.1128 General requirements for RIN distribution.

(a) *RINs assigned to volumes of renewable fuel.* (1) *Assigned RIN*, for the purposes of this subpart, means a RIN assigned to a volume of renewable fuel pursuant to §80.1126(e) with a K code of 1.

(2) Except as provided in §80.1126(e)(4) and §80.1129, no party can separate a RIN that has been assigned to a batch pursuant to §80.1126(e).

(3) An assigned RIN cannot be transferred to another party without simultaneously transferring a volume of renewable fuel to that same party.

(4) No more than 2.5 assigned gallon-RINs with a K code of 1 can be transferred to another party with every gallon of renewable fuel transferred to that same party.

(5)(i) On each of the dates listed in paragraph (a)(5)(v) of this section in any calendar year, the following equation must be satisfied for assigned RINs and volumes of renewable fuel owned by a party:

$$\Sigma(RIN)_D \leq \Sigma(V_{si} \times EV_i)_D$$

Where:

D = Applicable date.

$\Sigma(RIN)_D$ = Sum of all assigned gallon-RINs with a K code of 1 that are owned on date D.

$(V_{si})_D$ = Volume i of renewable fuel owned on date D, standardized to 60 °F, in gallons.

EV_i = Equivalence value representing volume i.

$\Sigma(Vsi\times EV_i)_D$ = Sum of all volumes of renewable fuel owned on date D, multiplied by their respective equivalence values.

(ii) The equivalence value EVi for use in the equation in paragraph (a)(5)(i) of this section for any volume of renewable fuel shall be 2.5.

(iii) The applicable dates are March 31, June 30, September 30, and December 31. For 2007 only, the applicable dates are September 30 and December 31.

(6) Any transfer of ownership of assigned RINs must be documented on product transfer documents generated pursuant to § 80.1153.

(i) The RIN must be recorded on the product transfer document used to transfer ownership of the RIN and the volume to another party; or

(ii) The RIN must be recorded on a separate product transfer document transferred to the same party on the same day as the product transfer document used to transfer ownership of the volume of renewable fuel.

(b) *RINs not assigned to volumes of renewable fuel.* (1) *Unassigned RIN*, for the purposes of this subpart, means a RIN with a K code of 2 that has been separated from a volume of renewable fuel pursuant to § 80.1126(e)(4) or § 80.1129.

(2) Any party that has registered pursuant to § 80.1150 can hold title to an unassigned RIN.

(3) Unassigned RINs can be transferred from one party to another any number of times.

(4) An unassigned batch-RIN can be divided by its holder into multiple batch-RINs, each representing a smaller number of gallon-RINs, if all of the following conditions are met:

(i) All RIN components other than SSSSSSSS and EEEEEEEE are identical for the original parent and newly formed daughter RINs.

(ii) The sum of the gallon-RINs associated with the multiple daughter batch-RINs is equal to the gallon-RINs associated with the parent batch-RIN.

[72 FR 23995, May 1, 2007, as amended at 73 FR 57255, Oct. 2, 2008]

§ 80.1129 Requirements for separating RINs from volumes of renewable fuel.

(a)(1) Separation of a RIN from a volume of renewable fuel means termination of the assignment of the RIN to a volume of renewable fuel.

(2) RINs that have been separated from volumes of renewable fuel become unassigned RINs subject to the provisions of § 80.1128(b).

(b) A RIN that is assigned to a volume of renewable fuel is separated from that volume only under one of the following conditions:

(1) Except as provided in paragraphs (b)(6) and (b)(8) of this section, a party that is an obligated party according to § 80.1106 must separate any RINs that have been assigned to a volume of renewable fuel if they own that volume.

(2) Except as provided in paragraph (b)(5) of this section, any party that owns a volume of renewable fuel must separate any RINs that have been assigned to that volume once the volume is blended with gasoline or diesel to produce a motor vehicle fuel. A party may separate up to 2.5 RINs per gallon of fuel that is blended.

(3) Any party that exports a volume of renewable fuel must separate any RINs that have been assigned to the exported volume.

(4) Any party that produces, imports, owns, sells or uses a volume of neat renewable fuel may separate any RINs that have been assigned to that volume of neat renewable fuel if the party designates the neat renewable fuel as motor vehicle fuel, and the neat renewable fuel is used as a motor vehicle fuel.

(5) RINs assigned to a volume of biodiesel (mono-alkyl ester) can only be separated from that volume pursuant to paragraph (b)(2) of this section if such biodiesel is blended into diesel fuel at a concentration of 80 volume percent biodiesel (mono-alkyl ester) or less.

(i) This paragraph (b)(5) shall not apply to obligated parties or exporters of renewable fuel.

(ii) This paragraph (b)(5) shall not apply to any party meeting the requirements of paragraph (b)(4) of this section.

(6) For RINs that an obligated party generates from renewable fuel that has not been blended into gasoline, the obligated party can only separate such RINs from volumes of renewable fuel if the number of gallon-RINs separated is less than or equal to its annual RVO.

(7) A producer or importer of cellulosic biomass ethanol or waste-derived ethanol can separate a portion of the RINs that it generates pursuant to § 80.1126(e)(4).

(8) For a party that has received a small refinery exemption under § 80.1141 or a small refiner exemption under § 80.1142, and who is not otherwise an obligated party, during the period of time that the small refinery or small refiner exemption is in effect the party may only separate RINs that have been assigned to volumes of renewable fuel that the party blends into motor vehicle fuel in accordance with paragraph (b)(2) of this section.

(c) The party responsible for separating a RIN from a volume of renewable fuel shall change the K code in the RIN from a value of 1 to a value of 2 prior to transferring the RIN to any other party.

(d) Upon and after separation of a RIN from its associated volume, product transfer documents used to transfer ownership of the volume must continue to meet the requirements of § 80.1153(a)(5)(iii).

(e) Any obligated party that uses a renewable fuel in a boiler or heater must retire any RINs associated with that volume of renewable fuel and report the retired RINs in the applicable reports under § 80.1152.

[72 FR 23995, May 1, 2007, as amended at 73 FR 57255, Oct. 2, 2008; 74 FR 29952, June 24, 2009]

§ 80.1130 Requirements for exporters of renewable fuels.

(a) Any party that owns any amount of renewable fuel (in its neat form or blended with gasoline or diesel) that is exported from the region described in § 80.1126(a) shall acquire sufficient RINs to offset a Renewable Volume Obligation representing the exported renewable fuel.

(b) *Renewable Volume Obligations.* An exporter of renewable fuel shall determine its Renewable Volume Obligation from the volumes of the renewable fuel exported.

(1) A renewable fuel exporter's total Renewable Volume Obligation shall be calculated according to the following formula:

$$RVO_i = (VOL_k * EV_k)_i + D_{i-1}$$

Where:

RVO_i = The Renewable Volume Obligation for the exporter for calendar year i, in gallons of renewable fuel.

k = A discrete volume of renewable fuel.

VOL_k = The standardized volume of discrete volume k of exported renewable fuel, in gallons, calculated in accordance with § 80.1126(d)(7).

EV_k = The equivalence value associated with discrete volume k.

= Sum involving all volumes of renewable fuel exported.

D_{i-1} = Renewable fuel deficit carryover from the previous year, in gallons.

(2)(i) If the equivalence value for a volume of renewable fuel can be determined pursuant to § 80.1115 based on its composition, then the appropriate equivalence value shall be used in the calculation of the exporter's Renewable Volume Obligation.

(ii) If the equivalence value for a volume of renewable fuel cannot be determined, the value of EV_k shall be 1.0.

(c) Each exporter of renewable fuel must demonstrate compliance with its RVO using RINs it has acquired pursuant to § 80.1127.

[72 FR 23995, May 1, 2007]

§ 80.1131 Treatment of invalid RINs.

(a) *Invalid RINs.* An invalid RIN is a RIN that is any of the following:

(1) Is a duplicate of a valid RIN.

(2) Was based on volumes that have not been standardized to 60 °F.

(3) Has expired.

(4) Was based on an incorrect equivalence value.

(5) Is deemed invalid under § 80.1167(g).

(6) Does not represent renewable fuel as it is defined in § 80.1101.

(7) Was otherwise improperly generated.

(8) In the event that the same RIN is transferred to two or more parties, all such RINs will be deemed to be invalid, unless EPA in its sole discretion determines that some portion of these RINs is valid.

(b) In the case of RINs that are invalid, the following provisions apply:

(1) Invalid RINs cannot be used to achieve compliance with the Renewable Volume Obligation of an obligated party or exporter, regardless of the party's good faith belief that the RINs were valid at the time they were acquired.

(2) Upon determination by any party that RINs owned are invalid, the party must adjust their records, reports, and compliance calculations as necessary to reflect the deletion of the invalid RINs.

(3) Any valid RINs remaining after deleting invalid RINs must first be applied to correct the transfer of invalid RINs to another party before applying the valid RINs to meet the party's Renewable Volume Obligation at the end of the compliance year.

[72 FR 23995, May 1, 2007, as amended at 74 FR 29952, June 24, 2009]

§ 80.1132 Reported spillage or disposal of renewable fuel.

(a) A reported spillage or disposal under this subpart means a spillage or disposal of renewable fuel associated with a requirement by a federal, state or local authority to report the spillage or disposal.

(b) Except as provided in paragraph (c) of this section, in the event of a reported spillage or disposal of any volume of renewable fuel, the owner of the renewable fuel must retire a number of gallon-RINs corresponding to the volume of spilled or disposed of renewable fuel multiplied by the lesser of its equivalence value or the number of RINs received with the spilled or disposed fuel, not to exceed 2.5 RINs per gallon.

(1) If the equivalence value for the spilled volume may be determined pursuant to § 80.1115 based on its composition, then the appropriate equivalence value shall be used.

(2) If the equivalence value for a spilled volume of renewable fuel cannot be determined, the equivalence value shall be 1.0.

(c) If the owner of a volume of renewable fuel that is spilled or disposed of and reported establishes that no RINs were generated to represent the volume, then no gallon-RINs shall be retired.

(d) A RIN that is retired under paragraph (b) of this section:

(1) Must be reported as a retired RIN in the applicable reports under § 80.1152.

(2) May not be transferred to another party or used by any obligated party to demonstrate compliance with the party's Renewable Volume Obligation.

[72 FR 23995, May 1, 2007, as amended at 73 FR 57256, Oct. 2, 2008]

§§ 80.1133–80.1140 [Reserved]

§ 80.1141 Small refinery exemption.

(a)(1) Gasoline produced at a refinery by a refiner, or foreign refiner (as defined at § 80.1165(a)), is exempt from the renewable fuel standards of § 80.1105 and the requirements that apply to obligated parties under this subpart if that refinery meets the definition of a small refinery under § 80.1101(g) for calendar year 2004.

(2) This exemption shall apply through December 31, 2010, unless a refiner chooses to waive this exemption (as described in paragraph (f) of this section), or the exemption is extended (as described in paragraph (e) of this section).

(3) For the purposes of this section, the term ''refiner'' shall include foreign refiners.

(4) This exemption shall only apply to refineries that process crude oil, or feedstocks derived from crude oil, through refinery processing units.

(b)(1) The small refinery exemption is effective immediately, except as specified in paragraph (b)(4) of this section.

(2) A refiner owning a small refinery must submit a verification letter to EPA containing all of the following information:

(i) The annual average aggregate daily crude oil throughput for the period January 1, 2004, through December 31, 2004 (as determined by dividing the aggregate throughput for the calendar year by the number 365).

(ii) A letter signed by the president, chief operating or chief executive officer of the company, or his/her designee, stating that the information contained in the letter is true to the best of his/her knowledge, and that the refinery was small as of December 31, 2004.

(iii) Name, address, phone number, facsimile number, and e-mail address of a corporate contact person.

(3) Verification letters must be submitted by August 31, 2007, to one of the addresses listed in paragraph (h) of this section.

(4) For foreign refiners the small refinery exemption shall be effective upon approval, by EPA, of a small refinery application. The application must contain all of the elements required for small refinery verification letters (as specified in paragraph (b)(2) of this section), must satisfy the provisions of §80.1165(f) through (h) and (o), and must be submitted by August 31, 2007 to one of the addresses listed in paragraph (h) of this section.

(c) If EPA finds that a refiner provided false or inaccurate information regarding a refinery's crude throughput (pursuant to paragraph (b)(2)(i) of this section) in its small refinery verification letter, the exemption will be void as of the effective date of these regulations.

(d) If a refiner is complying on an aggregate basis for multiple refineries, any such refiner may exclude from the calculation of its Renewable Volume Obligation (under §80.1107(a)) gasoline from any refinery receiving the small refinery exemption under paragraph (a) of this section.

(e)(1) The exemption period in paragraph (a) of this section shall be extended by the Administrator for a period of not less than two additional years if a study by the Secretary of Energy determines that compliance with the requirements of this subpart would impose a disproportionate economic hardship on the small refinery.

(i) A refiner may at any time petition the Administrator for an extension of its small refinery exemption under paragraph (a) of this section for the reason of disproportionate economic hardship.

(ii) A petition for an extension of the small refinery exemption must specify the factors that demonstrate a disproportionate economic hardship and must provide a detailed discussion regarding the inability of the refinery to produce gasoline meeting the requirements of §80.1105 and the date the refiner anticipates that compliance with the requirements can be achieved at the small refinery.

(2) The Administrator shall act on such a petition not later than 90 days after the date of receipt of the petition.

(f) At any time, a refiner with an approved small refinery exemption under paragraph (a) of this section may waive that exemption upon notification to EPA.

(1) A refiner's notice to EPA that it intends to waive its small refinery exemption must be received by November 1 to be effective in the next compliance year.

(2) The waiver will be effective beginning on January 1 of the following calendar year, at which point the gasoline produced at that refinery will be subject to the renewable fuels standard of §80.1105.

(3) The waiver must be sent to EPA at one of the addresses listed in paragraph (h) of this section.

(g) A refiner that acquires a refinery from either an approved small refiner (as defined under §80.1142(a)) or another refiner with an approved small refinery exemption under paragraph (a) of this section shall notify EPA in writing no later than 20 days following the acquisition.

(h) Verification letters under paragraph (b) of this section, petitions for small refinery hardship extensions under paragraph (e) of this section, and small refinery exemption waivers under paragraph (f) of this section shall be sent to one of the following addresses:

(1) *For U.S. mail:* U.S. EPA—Attn: RFS Program, 6406J, 1200 Pennsylvania Avenue, NW., Washington, DC 20460.

(2) *For overnight or courier services:* U.S. EPA, Attn: RFS Program, 6406J, 1310 L Street, NW., 6th floor, Washington, DC 20005.

[72 FR 23999, May 1, 2007, as amended at 73 FR 57256, Oct. 2, 2008]

§ 80.1142 What are the provisions for small refiners under the RFS program?

(a)(1) Gasoline produced by a refiner, or foreign refiner (as defined at § 80.1165(a)), is exempt from the renewable fuel standards of § 80.1105 and the requirements that apply to obligated parties under this subpart if the refiner or foreign refiner does not meet the definition of a small refinery under § 80.1101(g) but meets all of the following criteria:

(i) The refiner produced gasoline at its refineries by processing crude oil through refinery processing units from January 1, 2004 through December 31, 2004.

(ii) The refiner employed an average of no more than 1,500 people, based on the average number of employees for all pay periods for calendar year 2004 for all subsidiary companies, all parent companies, all subsidiaries of the parent companies, and all joint venture partners.

(iii) The refiner had a corporate-average crude oil capacity less than or equal to 155,000 barrels per calendar day (bpcd) for 2004.

(2) The small refiner exemption shall apply through December 31, 2010, unless a refiner chooses to waive the exemption (pursuant to paragraph (h) of this section) prior to that date.

(3) For the purposes of this section, the term ''refiner'' shall include foreign refiners.

(4) This exemption shall only apply to refineries that process crude oil, or feedstocks derived from crude oil, through refinery processing units.

(b) The small refiner exemption is effective immediately, except as provided in paragraph (d) of this section. Refiners who qualify for the small refiner exemption under paragraph (a) of this section must submit a verification letter (and any other relevant information) to EPA containing all of the following information for the refiner and for all subsidiary companies, all parent companies, all subsidiaries of the parent companies, and all joint venture partners:

(1)(i) A listing of the name and address of each company location where any employee worked for the period January 1, 2004 through December 31, 2004.

(ii) The average number of employees at each location based on the number of employees for each pay period for the period January 1, 2004 through December 31, 2004.

(iii) The type of business activities carried out at each location.

(iv) For joint ventures, the total number of employees includes the combined employee count of all corporate entities in the venture.

(v) For government-owned refiners, the total employee count includes all government employees.

(2) The total corporate crude oil capacity of each refinery as reported to the Energy Information Administration (EIA) of the U.S. Department of Energy (DOE), for the period January 1, 2004 through December 31, 2004. The information submitted to EIA is presumed to be correct. In cases where a company disagrees with this information, the company may petition EPA with appropriate data to correct the record when the company submits its verification letter.

(3) The verification letter must be signed by the president, chief operating or chief executive officer of the company, or his/her designee, stating that the information is true to the best of his/her knowledge, and that the company owned the refinery as of December 31, 2004.

(4) Name, address, phone number, facsimile number, and e-mail address of a corporate contact person.

(c) Verification letters under paragraph (b) of this section must be submitted by September 1, 2007.

(d) For foreign refiners the small refiner exemption shall be effective upon approval, by EPA, of a small refiner application. The application must contain all of the elements required for small refiner verification letters (as specified in paragraphs (b)(1), (b)(3), and (b)(4) of this section), must demonstrate compliance with the crude oil capacity criterion of paragraph (a)(1)(iii) of this section, must satisfy the provisions of § 80.1165(f) through (h) and (o), and must be submitted by September 1, 2007 to one of the addresses listed in paragraph (j) of this section.

(e) A refiner who qualifies as a small refiner under this section and subsequently fails to meet all of the qualifying criteria as set out in paragraph (a) of this section will have its small refiner exemption terminated effective January 1 of the next calendar year.

(1) In the event such disqualification occurs, the refiner shall notify EPA in writing no later than 20 days following the disqualifying event.

(2) Disqualification under this paragraph (e) shall not apply in the case of a merger between two approved small refiners.

(f) If EPA finds that a refiner provided false or inaccurate information in its small refiner status verification letter under this subpart, the small refiner's exemption will be void as of the effective date of these regulations.

(g) If a small refiner is complying on an aggregate basis for multiple refineries, the refiner may exempt the refineries from the calculation of its Renewable Volume Obligation under § 80.1107.

(h)(1) A refiner may, at any time, waive the small refiner exemption under paragraph (a) of this section upon notification to EPA.

(2) A refiner's notice to EPA that it intends to waive the small refiner exemption must be received by November 1 in order for the waiver to be effective for the following calendar year. The waiver will be effective beginning on January 1 of the following calendar year, at which point the refiner will be subject to the renewable fuel standard of § 80.1105.

(3) The waiver must be sent to EPA at one of the addresses listed in paragraph (j) of this section.

(i) Any refiner that acquires a refinery from another refiner with approved small refiner status under paragraph (a) of this section shall notify EPA in writing no later than 20 days following the acquisition.

(j) Verification letters under paragraph (b) of this section and small refiner exemption waivers under paragraph (h) of this section shall be sent to one of the following addresses:

(1) *For U.S. Mail:* U.S. EPA—Attn: RFS Program, 6406J, 1200 Pennsylvania Avenue, NW., Washington, DC 20460.

(2) *For overnight or courier services:* U.S. EPA, Attn: RFS Program, 6406J, 1310 L Street, NW., 6th floor, Washington, DC 20005.

[72 FR 23999, May 1, 2007, as amended at 73 FR 57256, Oct. 2, 2008]

§ 80.1143 What are the opt-in provisions for noncontiguous states and territories?

(a) A noncontiguous state or United States territory may petition the Administrator to opt-in to the program requirements of this subpart.

(b) The Administrator will approve the petition if it meets the provisions of paragraphs (c) and (d) of this section.

(c) The petition must be signed by the Governor of the state or his authorized representative (or the equivalent official of the territory).

(d)(1) A petition submitted under this section must be received by the Agency by November 1 for the state or territory to be included in the RFS program in the next calendar year.

(2) A petition submitted under this section should be sent to either of the following addresses:

(i) *For U.S. Mail:* U.S. EPA—Attn: RFS Program, 6406J, 1200 Pennsylvania Avenue, NW., Washington, DC 20460.

(ii) *For overnight or courier services:* U.S. EPA, Attn: RFS Program, 6406J, 1310 L Street, NW., 6th floor, Washington, DC 20005.

(e) Upon approval of the petition by the Administrator:

(1) EPA shall calculate the standard for the following year, including the total gasoline volume for the State or territory in question.

(2) Beginning on January 1 of the next calendar year, all gasoline refiners and importers in the state or territory for which a petition has been approved shall be obligated parties as defined in § 80.1106.

(3) Beginning on January 1 of the next calendar year, all renewable fuel producers in the State or territory for which a petition has been approved shall, pursuant to § 80.1126(a)(2), be required to generate RINs and assign them to batches of renewable fuel.

[72 FR 23999, May 1, 2007]

§§ 80.1144–80.1149 [Reserved]

§ 80.1150 What are the registration requirements under the RFS program?

(a) Any obligated party described in § 80.1106 and any exporter of renewable fuel described in § 80.1130 must provide EPA with the information specified for registration under § 80.76, if such information has not already been provided under the provisions of this part. An obligated party or an exporter of renewable fuel must receive EPA-issued identification numbers prior to engaging in any transaction involving RINs. Registration information may be submitted to EPA at any time after promulgation of this rule in the FEDERAL REGISTER.

(b) Any importer or producer of a renewable fuel must provide EPA the information specified under § 80.76, if such information has not already been provided under the provisions of this part, and must receive EPA-issued company and facility identification numbers prior to generating or assigning any RINs. Registration information may be submitted to EPA at any time after promulgation of this rule in the FEDERAL REGISTER.

(c) Any party who owns or intends to own RINs, but who is not covered by paragraphs (a) and (b) of this section, must provide EPA the information specified under § 80.76, if such information has not already been provided under the provisions of this part and must receive an EPA-issued company identification number prior to owning any RINs. Registration information may be submitted to EPA at any time after promulgation of this rule in the FEDERAL REGISTER.

(d) Registration shall be on forms, and following policies, established by the Administrator.

[72 FR 24000, May 1, 2007]

§ 80.1151 What are the recordkeeping requirements under the RFS program?

(a) Beginning September 1, 2007, any obligated party (as described at § 80.1106) or exporter of renewable fuel (as described at § 80.1130) must keep all of the following records:

(1) Product transfer documents consistent with § 80.1153 and associated with the obligated party's activity, if any, as transferor or transferee of renewable fuel.

(2) Copies of all reports submitted to EPA under § 80.1152(a).

(3) Records related to each RIN transaction, which includes all the following:

(i) A list of the RINs owned, purchased, sold, or retired.

(ii) The parties involved in each RIN transaction including the transferor, transferee, and any broker or agent.

(iii) The date of the transfer of the RIN(s).

(iv) Additional information related to details of the transaction and its terms.

(4) Records related to the use of RINs (by facility, if applicable) for compliance, which includes all the following:

(i) Methods and variables used to calculate the Renewable Volume Obligation pursuant to § 80.1107 or § 80.1130.

(ii) List of RINs used to demonstrate compliance.

(iii) Additional information related to details of RIN use for compliance.

(b) Beginning September 1, 2007, any producer or importer of a renewable fuel as defined at § 80.1101(d) must keep all of the following records:

(1) Product transfer documents consistent with § 80.1153 and associated with the renewable fuel producer's or importer's activity, if any, as transferor or transferee of renewable fuel.

(2) Copies of all reports submitted to EPA under § 80.1152(b).

(3) Records related to the generation and assignment of RINs for each facility, including all of the following:

(i) Batch volume in gallons.

(ii) Batch number.

(iii) RIN number as assigned under § 80.1126.

(iv) Identification of batches meeting the definition of cellulosic biomass ethanol.

(v) Date of production or import.

(vi) Results of any laboratory analysis of batch chemical composition or physical properties.

(vii) Additional information related to details of RIN generation.

(4) Records related to each RIN transaction, including all of the following:

(i) A list of the RINs owned, purchased, sold, or retired.

(ii) The parties involved in each transaction including the transferor, transferee, and any broker or agent.

(iii) The date of the transfer of the RIN(s).

(iv) Additional information related to details of the transaction and its terms.

(5) Records related to the production, importation, ownership, sale or use of any volume of neat renewable fuel that any party designates as motor vehicle fuel and uses as motor vehicle fuel.

(c) Beginning September 1, 2007, any producer of a renewable fuel defined at § 80.1101(d) must keep verifiable records of the following:

(1) The amount and type of fossil fuel and waste material-derived fuel used in producing on-site thermal energy dedicated to the production of ethanol at plants producing cellulosic biomass ethanol through the displacement of 90 percent or more of the fossil fuel normally used in the production of ethanol, as described at § 80.1101(a)(2).

(2) The amount and type of feedstocks used in producing cellulosic biomass ethanol as defined in § 80.1101(a)(1).

(3) The equivalent amount of fossil fuel (based on reasonable estimates) associated with the use of off-site generated waste heat that is used in the production of ethanol at plants producing cellulosic biomass ethanol through the displacement of 90 percent or more of the fossil fuel normally used in the production of ethanol, as described at § 80.1101(a)(2).

(4) The plot plan and process flow diagram for plants producing cellulosic biomass and waste derived ethanol as defined in § 80.1101(a) and (b), respectively.

(5) The independent third party verification required under § 80.1155 for producers of cellulosic biomass ethanol and waste derived ethanol.

(d) Beginning September 1, 2007, any party, other than those parties covered in paragraphs (a) and (b) of this section, that owns RINs must keep all of the following records:

(1) Product transfer documents consistent with § 80.1153 and associated with the party's activity, if any, as transferor or transferee of renewable fuel.

(2) Copies of all reports submitted to EPA under § 80.1152(c).

(3) Records related to each RIN transaction, including all of the following:

(i) A list of the RINs owned, purchased, sold or retired.

(ii) The parties involved in each RIN transaction including the transferor, transferee, and any broker or agent.

(iii) The date of the transfer of the RIN(s).

(iv) Additional information related to details of the transaction and its terms.

(e) The records required under this section and under § 80.1153 shall be kept for five years from the date they were created, except that records related to transactions involving RINs shall be kept for five years from the date of transfer.

(f) On request by EPA, the records required under this section and under § 80.1153 must be made available to the Administrator or the Administrator's authorized representative. For records that are electronically generated or maintained, the equipment or software necessary to read the records shall be made available; or, if requested by EPA, electronic records shall be converted to paper documents.

[72 FR 24000, May 1, 2007, as amended at 73 FR 57256, Oct. 2, 2008; 74 FR 29952, June 24, 2009]

§ 80.1152 What are the reporting requirements under the RFS program?

(a) Any obligated party described in § 80.1106 or exporter of renewable fuel described in § 80.1130 must submit to EPA reports according to the schedule, and containing the information, that is set forth in this paragraph (a).

(1) An annual compliance demonstration report for the previous compliance period shall be submitted every February 28, except as noted in paragraph (a)(1)(x) of this section, and shall include all of the following information:

(i) The obligated party's name.

(ii) The EPA company registration number.

(iii) Whether the party is complying on a corporate (aggregate) or facility-by-facility basis.

(iv) The EPA facility registration number, if complying on a facility-by-facility basis.

(v) The production volume of all of the products listed in § 80.1107(c) for the reporting year.

(vi) The renewable volume obligation (RVO), as defined in § 80.1127(a) for obligated parties and § 80.1130(b) for exporters of renewable fuel, for the reporting year.

(vii) Any deficit RVO carried over from the previous year.

(viii) The total current-year gallon-RINs used for compliance.

(ix) The total prior-years gallon-RINs used for compliance.

(x) A list of all RINs used for compliance in the reporting year. For compliance demonstrations covering calendar year 2007 only, this list shall be reported by May 31, 2008. In all subsequent years, this list shall be submitted by February 28.

(xi) Any deficit RVO carried into the subsequent year.

(xii) Any additional information that the Administrator may require.

(2) The quarterly RIN transaction reports required under paragraph (c)(1) of this section.

(3) The quarterly gallon-RIN activity reports required under paragraph (c)(2) of this section.

(4) Reports required under this paragraph (a) must be signed and certified as meeting all the applicable requirements of this subpart by the owner or a responsible corporate officer of the obligated party.

(b) Any producer or importer of a renewable fuel must, beginning November 30, 2007, submit to EPA reports according to the schedule, and containing the information, that is set forth in this paragraph (b).

(1) A quarterly RIN-generation report for each facility owned by the renewable fuel producer, and each importer, shall be submitted according to the schedule specified in paragraph (d) of this section, and shall include for the reporting period all of the following information for each batch of renewable fuel produced or imported, where ''batch'' means a discreet quantity of renewable fuel produced or imported and assigned a unique RIN:

(i) The renewable fuel producer's or importer's name.

(ii) The EPA company registration number.

(iii) The EPA facility registration number.

(iv) The applicable quarterly reporting period.

(v) The RINs generated for each batch according to § 80.1126.

(vi) The production date of each batch.

(vii) The type of renewable fuel of each batch, as defined in § 80.1101(d).

(viii) Information related to the volume of denaturant and applicable equivalence value of each batch.

(ix) The volume of each batch produced or imported.

(x) Any additional information the Administrator may require.

(2) The RIN transaction reports required under paragraph (c)(1) of this section.

(3) The quarterly gallon-RIN activity report required under paragraph (c)(2) of this section.

(4) Reports required under this paragraph (b) must be signed and certified as meeting all the applicable requirements of this subpart by the owner or a responsible corporate officer of the renewable fuel producer.

(c) Any party, including any party specified in paragraphs (a) and (b) of this section, that owns RINs during a reporting period must, beginning November 30, 2007, submit reports to EPA according to the schedule, and containing the information, that is set forth in this paragraph (c).

(1) A RIN transaction report for each RIN transaction shall be submitted by the end of the quarter in which the transaction occurred, according to the schedule specified in paragraph (d) of this section. Each report shall include all of the following:

(i) The submitting party's name.

(ii) The party's EPA company registration number.

(iii) [Reserved]

(iv) The applicable quarterly reporting period.

(v) Transaction type (RIN purchase, RIN sale, retired RIN).

(vi) Transaction date.

(vii) For a RIN purchase or sale, the trading partner's name.

(viii) For a RIN purchase or sale, the trading partner's EPA company registration number. For all other transactions, the submitting party's EPA company registration number.

(ix) RIN subject to the transaction.

(x) For a retired RIN, the reason for retiring the RIN (*e.g.*, reportable spill under § 80.1132, import volume correction under § 80.1166(k), renewable fuel used in boiler or heater under § 80.1129(e), enforcement obligation).

(xi) Any additional information that the Administrator may require.

(2) A quarterly gallon-RIN activity report shall be submitted to EPA according to the schedule specified in paragraph (d) of this section. Each report shall summarize gallon-RIN activities for the reporting period, separately for RINs assigned to a renewable fuel volume and RINs separated from a renewable fuel volume. The quarterly gallon-RIN activity report shall include all of the following information:

(i) The submitting party's name.

(ii) The party's EPA company registration number.

(iii) The number of current-year gallon-RINs owned at the start of the quarter.

(iv) The number of prior-year gallon-RINs owned at the start of the quarter.

(v) The total current-year gallon-RINs purchased.

(vi) The total prior-year gallon-RINs purchased.

(vii) The total current-year gallon-RINs sold.

(viii) The total prior-year gallon-RINs sold.

(ix) The total current-year gallon-RINs retired.

(x) The total prior-year gallon-RINs retired.

(xi) The number of current-year gallon-RINs owned at the end of the quarter.

(xii) The number of prior-year gallon-RINs owned at the end of the quarter.

(xiii) For parties reporting gallon-RIN activity under this paragraph for RINs assigned to a volume of renewable fuel, the total volume of renewable fuel (in gallons) owned at the end of the quarter.

(xiv) Any additional information that the Administrator may require.

(3) All reports required under this paragraph (c) must be signed and certified as meeting all the applicable requirements of this subpart by the RIN owner or a responsible corporate officer of the RIN owner.

(d) Quarterly reports shall be submitted to EPA by: May 31st for the first calendar quarter of January through March; August 31st for the second calendar quarter of April through June; November 30th for the third calendar quarter of July through September; and February 28th for the fourth calendar quarter of October through December. For 2007, quarterly reports shall commence on November 30, 2007.

(e) Reports required under this section shall be submitted on forms and following procedures as prescribed by EPA.

[72 FR 24000, May 1, 2007, as amended at 73 FR 57256, Oct. 2, 2008]

§ 80.1153 What are the product transfer document (PTD) requirements for the RFS program?

(a) Any time that a person transfers ownership of renewable fuels subject to this subpart, the transferor must provide to the transferee documents identifying the renewable fuel and any assigned RINs which include all of the following information as applicable:

(1) The name and address of the transferor and transferee.

(2) The transferor's and transferee's EPA company registration number.

(3) The volume of renewable fuel that is being transferred.

(4) The date of the transfer.

(5) Whether any RINs are assigned to the volume, as follows:

(i) If the assigned RINs are being transferred on the same PTD used to transfer ownership of the renewable fuel, then the assigned RINs shall be listed on the PTD.

(ii) If the assigned RINs are being transferred on a separate PTD from that which is used to transfer ownership of the renewable fuel, then the PTD which is used to transfer ownership of the renewable fuel shall state

the number of gallon-RINs being transferred as well as a unique reference to the PTD which is transferring the assigned RINs.

(iii) If no assigned RINs are being transferred with the renewable fuel, the PTD which is used to transfer ownership of the renewable fuel shall state ''No assigned RINs transferred''.

(b) Except for transfers to truck carriers, retailers, or wholesale purchaser-consumers, product codes may be used to convey the information required under paragraphs (a)(1) through (a)(4) of this section if such codes are clearly understood by each transferee. The RIN number required under paragraph (a)(5) of this section must always appear in its entirety.

[72 FR 24000, May 1, 2007, as amended at 73 FR 57257, Oct. 2, 2008]

§ 80.1154 What are the provisions for renewable fuel producers and importers who produce or import less than 10,000 gallons of renewable fuel per year?

(a) Renewable fuel producers located within the United States that produce less than 10,000 gallons of renewable fuel each year, and importers who import less than 10,000 gallons of renewable fuel each year, are not required to generate RINs or to assign RINs to batches of renewable fuel. Such producers and importers that do not generate and/or assign RINs to batches of renewable fuel are also exempt from all the following requirements of this subpart K, except as stated in paragraph (b) of this section:

(1) The registration requirements of § 80.1150.

(2) The recordkeeping requirements of § 80.1151.

(3) The reporting requirements of § 80.1152.

(4) The attest engagement requirements of § 80.1164.

(b) Renewable fuel producers and importers who produce or import less than 10,000 gallons of renewable fuel each year and that generate and/or assign RINs to batches of renewable fuel are subject to the provisions of §§ 80.1150 through 80.1152, and § 80.1164.

[72 FR 24000, May 1, 2007, as amended at 73 FR 57257, Oct. 2, 2008]

§ 80.1155 What are the additional requirements for a producer of cellulosic biomass ethanol or waste derived ethanol?

(a) A producer of cellulosic biomass ethanol or waste derived ethanol (hereinafter referred to as ''ethanol producer'' under this section) is required to arrange for an independent third party to review the records required in § 80.1151(c) and provide the ethanol producer with a written verification that the records support a claim that:

(1) The ethanol producer's facility is a facility that has the capability of producing cellulosic biomass ethanol as defined in § 80.1101(a) or waste derived ethanol as defined in § 80.1101(b); and

(2) The ethanol producer produces cellulosic biomass ethanol as defined in § 80.1101(a) or waste derived ethanol as defined in § 80.1101(b).

(b) The verifications required under paragraph (a) of this section must be conducted by a Professional Chemical Engineer who is based in the United States and is licensed by the appropriate state agency, unless the ethanol producer is a foreign producer subject to § 80.1166.

(c) To be considered an independent third party under paragraph (a) of this section:

(1) The third party shall not be operated by the ethanol producer or any subsidiary of employee of the ethanol producer.

(2) The third party shall be free from any interest in the ethanol producer's business.

(3) The ethanol producer shall be free from any interest in the third party's business.

(4) Use of a third party that is debarred, suspended, or proposed for debarment pursuant to the Government-wide Debarment and Suspension regulations, 40 CFR part 32, or the Debarment, Suspension and Ineligibility provisions of the Federal Acquisition Regulations, 48 CFR, part 9, subpart 9.4, shall be deemed noncompliance with the requirements of this section.

(d) The ethanol producer must obtain the written verification required under paragraph (a)(1) of this section by February 28 of the year following the first year in which the ethanol producer

claims to be producing cellulosic biomass ethanol or waste derived ethanol.

(e) The verification in paragraph (a)(2) of this section is required for each calendar year that the ethanol producer claims to be producing cellulosic biomass ethanol or waste derived ethanol. The ethanol producer must obtain the written verification required under paragraph (a)(2) of this section by February 28 for the previous calendar year.

(f) The ethanol producer must retain records of the verifications required under paragraph (a) of this section, as required in § 80.1151(c)(5).

(g) The independent third party shall retain all records pertaining to the verification required under this section for a period of five years from the date of creation and shall deliver such records to the Administrator upon request.

[72 FR 24000, May 1, 2007]

§§ 80.1156–80.1159 [Reserved]

§ 80.1160 What acts are prohibited under the RFS program?

(a) *Renewable fuel producer or importer violation*. Except as provided in § 80.1154, no person shall produce or import a renewable fuel without generating a batch-RIN as required under § 80.1126.

(b) *RIN generation and transfer violations*. No person shall do any of the following:

(1) Improperly generate a RIN (e.g., generate a RIN for which the applicable renewable fuel volume was not produced).

(2) Create or transfer to any person a RIN that is invalid under § 80.1131.

(3) Transfer to any person a RIN that is not properly identified as required under § 80.1125.

(4) Transfer to any person a RIN with a K code of 1 without transferring an appropriate volume of renewable fuel to the same person on the same day.

(c) *RIN use violations*. No person shall do any of the following:

(1) Fail to acquire sufficient RINs, or use invalid RINs, to meet the party's renewable fuel volume obligation under § 80.1127.

(2) Fail to acquire sufficient RINs to meet the party's renewable fuel volume obligation under § 80.1130.

(3) Use a validly generated RIN to meet the party's renewable fuel volume obligation under § 80.1127, or separate and transfer a validly generated RIN, where the party ultimately uses the renewable fuel volume associated with the RIN in a heater or boiler.

(d) *RIN retention violation*. No person shall retain RINs in violation of the requirements in § 80.1128(a)(5).

(e) *Causing a violation*. No person shall cause another person to commit an act in violation of any prohibited act under this section.

(f) *Failure to meet a requirement*. No person shall fail to meet any requirement that applies to that person under this subpart.

[72 FR 24003, May 1, 2007, as amended at 73 FR 57257, Oct. 2, 2008]

§ 80.1161 Who is liable for violations under the RFS program?

(a) *Persons liable for violations of prohibited acts*. (1) Any person who violates a prohibition under § 80.1160(a) through (d) is liable for the violation of that prohibition.

(2) Any person who causes another person to violate a prohibition under § 80.1160(a) through (d) is liable for a violation of § 80.1160(e).

(b) *Persons liable for failure to meet other provisions of this subpart*. (1) Any person who fails to meet a requirement of any provision of this subpart is liable for a violation of that provision.

(2) Any person who causes another person to fail to meet a requirement of any provision of this subpart is liable for causing a violation of that provision.

(c) *Parent corporation liability*. Any parent corporation is liable for any violation of this subpart that is committed by any of its subsidiaries.

(d) *Joint venture liability*. Each partner to a joint venture is jointly and severally liable for any violation of this subpart that is committed by the joint venture operation.

[72 FR 24003, May 1, 2007]

§ 80.1162 [Reserved]

§ 80.1163 What penalties apply under the RFS program?

(a) Any person who is liable for a violation under § 80.1161 is subject to a

civil penalty of up to $32,500, as specified in sections 205 and 211(d) of the Clean Air Act, for every day of each such violation and the amount of economic benefit or savings resulting from each violation.

(b) Any person liable under § 80.1161(a) for a violation of § 80.1160(c) for failure to meet a renewable volume obligation, or § 80.1160(e) for causing another party to fail to meet a renewable volume obligation, during any averaging period, is subject to a separate day of violation for each day in the averaging period.

(c) Any person liable under § 80.1161(b) for failure to meet, or causing a failure to meet, a requirement of any provision of this subpart is liable for a separate day of violation for each day such a requirement remains unfulfilled.

[72 FR 24004, May 1, 2007]

§ 80.1164 What are the attest engagement requirements under the RFS program?

The requirements regarding annual attest engagements in §§ 80.125 through 80.127, and 80.130, also apply to any attest engagement procedures required under this subpart. In addition to any other applicable attest engagement procedures, the following annual attest engagement procedures are required under this subpart.

(a) The following attest procedures shall be completed for any obligated party as stated in § 80.1106(a) or exporter of renewable fuel that is subject to the renewable fuel standard under § 80.1105:

(1) *Annual compliance demonstration report*. (i) Obtain and read a copy of the annual compliance demonstration report required under § 80.1152(a)(1) which contains information regarding all the following:

(A) The obligated party's volume of finished gasoline, reformulated gasoline blendstock for oxygenate blending (RBOB), and conventional gasoline blendstock that becomes finished conventional gasoline upon the addition of oxygenate (CBOB) produced or imported during the reporting year.

(B) Renewable volume obligation (RVO).

(C) RINs used for compliance.

(ii) Obtain documentation of any volumes of renewable fuel used in gasoline at the refinery or import facility or exported during the reporting year; compute and report as a finding the total volumes of renewable fuel represented in these documents.

(iii) Compare the volumes of gasoline reported to EPA in the report required under § 80.1152(a)(1) with the volumes, excluding any renewable fuel volumes, contained in the inventory reconciliation analysis under § 80.133, and verify that the volumes reported to EPA agree with the volumes in the inventory reconciliation analysis.

(iv) Compute and report as a finding the obligated party's or exporter's RVO, and any deficit RVO carried over from the previous year or carried into the subsequent year, and verify that the values agree with the values reported to EPA.

(v) Obtain the database, spreadsheet, or other documentation for all RINs used for compliance during the year being reviewed; calculate the total number of RINs used for compliance by year of generation represented in these documents; state whether this information agrees with the report to EPA and report as a finding any exceptions.

(vi) Identify a representative sample, selected in accordance with the guidelines in § 80.127, of RINs used for compliance during the year being reviewed.

(vii) Obtain contracts, invoices or other documentation for RINs in the representative sample obtained in paragraph (a)(1)(vi) of this section, and the product transfer documents for the RINs in the representative sample; state whether the information in these documents agrees with the information in the party's report to EPA and report as a finding any exceptions.

(viii) Verify that the product transfer documents for the representative sample of RINs used for compliance contain the applicable information required under § 80.1153 and report as a finding any product transfer document that does not contain the required information; verify the accuracy of the information contained in the product transfer documents for the representative sample and report as a finding any exceptions.

(2) *RIN transaction reports.* (i) Identify a representative sample, selected in accordance with the guidelines in § 80.127, separately for each RIN transaction type (RINs purchased, RINs sold, RINs retired) included in the RIN transaction reports required under § 80.1152(a)(2) for the compliance year.

(ii) Obtain contracts, invoices, or other documentation for each of the representative samples of RIN transactions, and the product transfer documents for each of the representative samples of RIN transactions; compute the transaction types, transaction dates, and RINs traded; state whether the information agrees with the party's reports to EPA and report as a finding any exceptions.

(iii) Verify that the product transfer documents for the representative sample of RINs sold and the representative sample of RINs purchased contain the applicable information required under § 80.1153 and report as a finding any product transfer document that does not contain the required information; verify the accuracy of the information contained in the product transfer documents for the representative samples and report as a finding any exceptions.

(3) *Gallon-RIN activity reports.* (i) Obtain and read copies of all quarterly gallon-RIN activity reports required under § 80.1152(a)(3) for the compliance year.

(ii) Obtain the database, spreadsheet, or other documentation used to generate the information in the gallon-RIN activity reports; compare the RIN transaction samples reviewed under paragraph (a)(2) of this section with the corresponding entries in the database or spreadsheet and report as a finding any discrepancies; compute the total number of current-year and prior-year gallon-RINs owned at the start and end of the quarter, purchased, sold and retired, and for parties that reported gallon-RIN activity for RINs assigned to a volume of renewable fuel, the volume of renewable fuel owned at the end of the quarter, as represented in these documents; and state whether this information agrees with the party's reports to EPA.

(b) The following attest procedures shall be completed for any renewable fuel producer or importer:

(1) *RIN-generation reports.* (i) Obtain and read copies of the quarterly RIN generation reports required under § 80.1152(b)(1) for the compliance year.

(ii) Obtain production data for each renewable fuel batch produced or imported during the year being reviewed; compute the RIN numbers, production dates, types, volumes of denaturant and applicable equivalence values, and production volumes for each batch; state whether this information agrees with the party's reports to EPA and report as a finding any exceptions.

(iii) Verify that the proper number of RINs were generated and assigned for each batch of renewable fuel produced or imported, as required under § 80.1126.

(iv) Identify a representative sample, selected in accordance with the guidelines in § 80.127, of renewable fuel batches produced or imported during the year being reviewed; obtain product transfer documents for the representative sample; verify that the product transfer documents contain the applicable information required under § 80.1153; verify the accuracy of the information contained in the product transfer documents; report as a finding any product transfer document that does not contain the applicable information required under § 80.1153.

(2) *RIN transaction reports.* (i) Identify a representative sample, selected in accordance with the guidelines in § 80.127, separately for each transaction type (RINs purchased, RINs sold, RINs retired) included in the RIN transaction reports required under § 80.1152(b)(2) for the compliance year.

(ii) Obtain contracts, invoices, or other documentation for each of the representative samples of RIN transactions, and the product transfer documents for each of the representative samples of RIN transactions; compute the transaction types, transaction dates, and the RINs traded; state whether this information agrees with the party's reports to EPA and report as a finding any exceptions.

(iii) Verify that the product transfer documents for the representative sample of RINs sold and the representative sample of RINs purchased contain the applicable information required under § 80.1153 and report as a finding any product transfer document that does

not contain the required information; verify the accuracy of the information contained in the product transfer documents for the representative samples and report as a finding any exceptions.

(3) *Gallon-RIN activity reports.* (i) Obtain and read copies of the quarterly gallon-RIN activity reports required under § 80.1152(b)(3) for the compliance year.

(ii) Obtain the database, spreadsheet, or other documentation used to generate the information in the gallon-RIN activity reports; compare the RIN transaction samples reviewed under paragraph (b)(2) of this section with the corresponding entries in the data base or spreadsheet and report as a finding any discrepancies; compute the total number of current-year and prior-year gallon-RINs owned at the start and end of the quarter, purchased, sold and retired, and for parties that reported gallon-RIN activity for RINs assigned to a volume of renewable fuel, the volume of renewable fuel owned at the end of the quarter, as represented in these documents; and state whether this information agrees with the party's reports to EPA.

(c) The following attest procedures shall be completed for any party other than an obligated party or renewable fuel producer or importer that owns any RINs during a calendar year.

(1) *RIN transaction reports.* (i) Identify a representative sample, selected in accordance with the guidelines in § 80.127, separately for each RIN transaction type (RINs purchased, RINs sold, RINs retired) included in the RIN transaction reports required under § 80.1152(c)(1) for the compliance year.

(ii) Obtain contracts, invoices, or other documentation for the representative samples of RIN transactions, and the product transfer documents for the representative samples of RIN transactions; compute the transaction types, transaction dates, and the RINs traded; state whether this information agrees with the party's reports to EPA and report as a finding any exceptions.

(iii) Verify that the transfer documents for the representative sample of RINs sold and the representative sample of RINs purchased contain the applicable information required under § 80.1153 and report as a finding any product transfer document that does not contain the required information; verify the accuracy of the information contained in the product transfer documents for the representative samples and report as a finding any exceptions.

(2) *Gallon-RIN activity reports.* (i) Obtain and read copies of the gallon-RIN activity reports required under § 80.1152(c)(2) for the compliance year.

(ii) Obtain the database, spreadsheet, or other documentation used to generate the information in the gallon-RIN activity reports; compare the RIN transaction samples reviewed under paragraph (c)(1) of this section with the corresponding entries in the data base or spreadsheet and report as a finding any discrepancies; compute the total number of current-year and prior-year gallon-RINs owned at the start and end of the quarter, purchased, sold and retired, and for parties that reported gallon-RIN activity for RINs assigned to a volume of renewable fuel, the volume of renewable fuel owned at the end of the quarter, as represented in these documents; and state whether this information agrees with the party's reports to EPA.

(d) The following submission dates apply to the attest engagements required under this section. (1) For each compliance year, each party subject to the attest engagement requirements under this section shall cause the reports required under this section to be submitted to EPA by May 31 of the year following the compliance year.

(2) For the 2007 compliance year only, the attest engagement required under paragraph (a) of this section may be submitted to EPA with the attest engagement for the 2008 compliance year.

(e) The party conducting the procedures under this section shall obtain a written representation from a company representative that the copies of the reports required by this section are complete and accurate copies of the reports filed with EPA.

(f) The party conducting the procedures under this section shall identify and report as a finding the commercial computer program used by the party to track the data required by the regulations in this subpart, if any.

[72 FR 24004, May 1, 2007, as amended at 73 FR 57257, Oct. 2, 2008]

§ 80.1165 What are the additional requirements under this subpart for a foreign small refiner?

(a) *Definitions.* The following definitions apply for this subpart:

(1) *Foreign refinery* is a refinery that is located outside the United States, the Commonwealth of Puerto Rico, the U.S. Virgin Islands, Guam, American Samoa, and the Commonwealth of the Northern Mariana Islands (collectively referred to in this section as ''the United States'').

(2) *Foreign refiner* is a person that meets the definition of refiner under § 80.2(i) for a foreign refinery.

(3) *RFS–FRGAS* is gasoline produced at a foreign refinery that has received a small refinery exemption under § 80.1141 or a small refiner exemption under § 80.1142 that is imported into the United States.

(4) *Non-RFS–FRGAS* is one of the following:

(i) Gasoline produced at a foreign refinery that has received a small refinery exemption under § 80.1141 or a small refiner exemption under § 80.1142 that is not imported into the United States.

(ii) Gasoline produced at a foreign refinery that has not received a small refinery exemption under § 80.1141 or small refiner exemption under § 80.1142.

(5) A foreign small refiner is a foreign refiner that has received a small refinery exemption under § 80.1141 for one or more of its refineries or a small refiner exemption under § 80.1142.

(b) *General requirements for RFS–FRGAS foreign small refineries and small refiners.*

(1) A foreign small refiner must designate, at the time of production, each batch of gasoline produced at the foreign refinery that is exported for use in the United States as RFS–FRGAS; and

(2) Meet all requirements that apply to refiners who have received a small refinery or small refiner exemption under this subpart.

(c) *Designation, foreign refiner certification, and product transfer documents.* (1) Any foreign small refiner must designate each batch of RFS–FRGAS as such at the time the gasoline is produced.

(2) On each occasion when RFS–FRGAS is loaded onto a vessel or other transportation mode for transport to the United States, the foreign refiner shall prepare a certification for each batch of RFS–FRGAS that meets all the following requirements:

(i) The certification shall include the report of the independent third party under paragraph (d) of this section, and all the following additional information:

(A) The name and EPA registration number of the refinery that produced the RFS–FRGAS.

(B) [Reserved]

(ii) The identification of the gasoline as RFS–FRGAS.

(iii) The volume of RFS–FRGAS being transported, in gallons.

(3) On each occasion when any person transfers custody or title to any RFS–FRGAS prior to its being imported into the United States, it must include all the following information as part of the product transfer document information:

(i) Designation of the gasoline as RFS–FRGAS.

(ii) The certification required under paragraph (c)(2) of this section.

(d) *Load port independent testing and refinery identification.* (1) On each occasion that RFS–FRGAS is loaded onto a vessel for transport to the United States the foreign small refiner shall have an independent third party do all the following:

(i) Inspect the vessel prior to loading and determine the volume of any tank bottoms.

(ii) Determine the volume of RFS–FRGAS loaded onto the vessel (exclusive of any tank bottoms before loading).

(iii) Obtain the EPA-assigned registration number of the foreign refinery.

(iv) Determine the name and country of registration of the vessel used to transport the RFS–FRGAS to the United States.

(v) Determine the date and time the vessel departs the port serving the foreign refinery.

(vi) Review original documents that reflect movement and storage of the RFS–FRGAS from the foreign refinery to the load port, and from this review determine:

(A) The refinery at which the RFS–FRGAS was produced; and

(B) That the RFS–FRGAS remained segregated from Non-RFS–FRGAS and other RFS–FRGAS produced at a different refinery.

(2) The independent third party shall submit a report to:

(i) The foreign small refiner containing the information required under paragraph (d)(1) of this section, to accompany the product transfer documents for the vessel; and

(ii) The Administrator containing the information required under paragraph (d)(1) of this section, within thirty days following the date of the independent third party's inspection. This report shall include a description of the method used to determine the identity of the refinery at which the gasoline was produced, assurance that the gasoline remained segregated as specified in paragraph (j)(1) of this section, and a description of the gasoline's movement and storage between production at the source refinery and vessel loading.

(3) The independent third party must:

(i) Be approved in advance by EPA, based on a demonstration of ability to perform the procedures required in this paragraph (d);

(ii) Be independent under the criteria specified in § 80.65(f)(2)(iii); and

(iii) Sign a commitment that contains the provisions specified in paragraph (f) of this section with regard to activities, facilities, and documents relevant to compliance with the requirements of this paragraph (d).

(e) *Comparison of load port and port of entry testing.* (1)(i) Any small foreign small refiner and any United States importer of RFS–FRGAS shall compare the results from the load port testing under paragraph (d) of this section, with the port of entry testing as reported under paragraph (k) of this section, for the volume of gasoline, except as specified in paragraph (e)(1)(ii) of this section.

(ii) Where a vessel transporting RFS–FRGAS off loads this gasoline at more than one United States port of entry, the requirements of paragraph (e)(1)(i) of this section do not apply at subsequent ports of entry if the United States importer obtains a certification from the vessel owner that the requirements of paragraph (e)(1)(i) of this section were met and that the vessel has not loaded any gasoline or blendstock between the first United States port of entry and the subsequent port of entry.

(2) If the temperature-corrected volumes determined at the port of entry and at the load port differ by more than one percent, the United States importer and the foreign small refiner shall not treat the gasoline as RFS–FRGAS and the importer shall include the volume of gasoline in the importer's RFS compliance calculations.

(f) *Foreign refiner commitments.* Any small foreign small refiner shall commit to and comply with the provisions contained in this paragraph (f) as a condition to being approved for a small refinery or small refiner exemption under this subpart.

(1) Any United States Environmental Protection Agency inspector or auditor must be given full, complete and immediate access to conduct inspections and audits of the foreign refinery.

(i) Inspections and audits may be either announced in advance by EPA, or unannounced.

(ii) Access will be provided to any location where:

(A) Gasoline is produced;

(B) Documents related to refinery operations are kept; and

(C) RFS–FRGAS is stored or transported between the foreign refinery and the United States, including storage tanks, vessels and pipelines.

(iii) Inspections and audits may be by EPA employees or contractors to EPA.

(iv) Any documents requested that are related to matters covered by inspections and audits must be provided to an EPA inspector or auditor on request.

(v) Inspections and audits by EPA may include review and copying of any documents related to all the following:

(A) The volume of RFS–FRGAS.

(B) The proper classification of gasoline as being RFS–FRGAS or as not being RFS–FRGAS.

(C) Transfers of title or custody to RFS–FRGAS.

(D) Testing of RFS–FRGAS.

(E) Work performed and reports prepared by independent third parties and by independent auditors under the requirements of this section, including work papers.

(vi) Inspections and audits by EPA may include interviewing employees.

(vii) Any employee of the foreign refiner must be made available for interview by the EPA inspector or auditor, on request, within a reasonable time period.

(viii) English language translations of any documents must be provided to an EPA inspector or auditor, on request, within 10 working days.

(ix) English language interpreters must be provided to accompany EPA inspectors and auditors, on request.

(2) An agent for service of process located in the District of Columbia shall be named, and service on this agent constitutes service on the foreign refiner or any employee of the foreign refiner for any action by EPA or otherwise by the United States related to the requirements of this subpart.

(3) The forum for any civil or criminal enforcement action related to the provisions of this section for violations of the Clean Air Act or regulations promulgated thereunder shall be governed by the Clean Air Act, including the EPA administrative forum where allowed under the Clean Air Act.

(4) United States substantive and procedural laws shall apply to any civil or criminal enforcement action against the foreign refiner or any employee of the foreign refiner related to the provisions of this section.

(5) Submitting an application for a small refinery or small refiner exemption, or producing and exporting gasoline under such exemption, and all other actions to comply with the requirements of this subpart relating to such exemption constitute actions or activities covered by and within the meaning of the provisions of 28 U.S.C. 1605(a)(2), but solely with respect to actions instituted against the foreign refiner, its agents and employees in any court or other tribunal in the United States for conduct that violates the requirements applicable to the foreign refiner under this subpart, including conduct that violates the False Statements Accountability Act of 1996 (18 U.S.C. 1001) and section 113(c)(2) of the Clean Air Act (42 U.S.C. 7413).

(6) The foreign refiner, or its agents or employees, will not seek to detain or to impose civil or criminal remedies against EPA inspectors or auditors, whether EPA employees or EPA contractors, for actions performed within the scope of EPA employment related to the provisions of this section.

(7) The commitment required by this paragraph (f) shall be signed by the owner or president of the foreign refiner business.

(8) In any case where RFS–FRGAS produced at a foreign refinery is stored or transported by another company between the refinery and the vessel that transports the RFS–FRGAS to the United States, the foreign refiner shall obtain from each such other company a commitment that meets the requirements specified in paragraphs (f)(1) through (f)(7) of this section, and these commitments shall be included in the foreign refiner's application for a small refinery or small refiner exemption under this subpart.

(g) *Sovereign immunity*. By submitting an application for a small refinery or small refiner exemption under this subpart, or by producing and exporting gasoline to the United States under such exemption, the foreign refiner, and its agents and employees, without exception, become subject to the full operation of the administrative and judicial enforcement powers and provisions of the United States without limitation based on sovereign immunity, with respect to actions instituted against the foreign refiner, its agents and employees in any court or other tribunal in the United States for conduct that violates the requirements applicable to the foreign refiner under this subpart, including conduct that violates the False Statements Accountability Act of 1996 (18 U.S.C. 1001) and section 113(c)(2) of the Clean Air Act (42 U.S.C. 7413).

(h) *Bond posting*. Any foreign refiner shall meet the requirements of this paragraph (h) as a condition to approval of a small foreign refinery or small foreign refiner exemption under this subpart.

(1) The foreign refiner shall post a bond of the amount calculated using the following equation:

$$\text{Bond} = G * \$0.01$$

Where:

Bond = amount of the bond in United States dollars.

G = the largest volume of gasoline produced at the foreign refinery and exported to the United States, in gallons, during a single calendar year among the most recent of the following calendar years, up to a maximum of five calendar years: The calendar year immediately preceding the date the refinery's application is submitted, the calendar year the application is submitted, and each succeeding calendar year.

(2) Bonds shall be posted by:

(i) Paying the amount of the bond to the Treasurer of the United States;

(ii) Obtaining a bond in the proper amount from a third party surety agent that is payable to satisfy United States administrative or judicial judgments against the foreign refiner, provided EPA agrees in advance as to the third party and the nature of the surety agreement; or

(iii) An alternative commitment that results in assets of an appropriate liquidity and value being readily available to the United States, provided EPA agrees in advance as to the alternative commitment.

(3) Bonds posted under this paragraph (h) shall:

(i) Be used to satisfy any judicial judgment that results from an administrative or judicial enforcement action for conduct in violation of this subpart, including where such conduct violates the False Statements Accountability Act of 1996 (18 U.S.C. 1001) and section 113(c)(2) of the Clean Air Act (42 U.S.C. 7413);

(ii) Be provided by a corporate surety that is listed in the United States Department of Treasury Circular 570 ''Companies Holding Certificates of Authority as Acceptable Sureties on Federal Bonds''; and

(iii) Include a commitment that the bond will remain in effect for at least five years following the end of latest annual reporting period that the foreign refiner produces gasoline pursuant to the requirements of this subpart.

(4) On any occasion a foreign refiner bond is used to satisfy any judgment, the foreign refiner shall increase the bond to cover the amount used within 90 days of the date the bond is used.

(5) If the bond amount for a foreign refiner increases, the foreign refiner shall increase the bond to cover the shortfall within 90 days of the date the bond amount changes. If the bond amount decreases, the foreign refiner may reduce the amount of the bond beginning 90 days after the date the bond amount changes.

(i) *English language reports.* Any document submitted to EPA by a foreign refiner shall be in English language, or shall include an English language translation.

(j) *Prohibitions.* (1) No person may combine RFS–FRGAS with any Non-RFS–FRGAS, and no person may combine RFS–FRGAS with any RFS–FRGAS produced at a different refinery, until the importer has met all the requirements of paragraph (k) of this section.

(2) No foreign refiner or other person may cause another person to commit an action prohibited in paragraph (j)(1) of this section, or that otherwise violates the requirements of this section.

(k) *United States importer requirements.* Any United States importer of RFS–FRGAS shall meet the following requirements:

(1) Each batch of imported RFS–FRGAS shall be classified by the importer as being RFS–FRGAS.

(2) Gasoline shall be classified as RFS–FRGAS according to the designation by the foreign refiner if this designation is supported by product transfer documents prepared by the foreign refiner as required in paragraph (c) of this section. Additionally, the importer shall comply with all requirements of this subpart applicable to importers.

(3) For each gasoline batch classified as RFS–FRGAS, any United States importer shall have an independent third party do all the following:

(i) Determine the volume of gasoline in the vessel.

(ii) Use the foreign refiner's RFS–FRGAS certification to determine the name and EPA-assigned registration number of the foreign refinery that produced the RFS–FRGAS.

(iii) Determine the name and country of registration of the vessel used to transport the RFS–FRGAS to the United States.

(iv) Determine the date and time the vessel arrives at the United States port of entry.

(4) Any importer shall submit reports within 30 days following the date any vessel transporting RFS–FRGAS arrives at the United States port of entry to:

(i) The Administrator containing the information determined under paragraph (k)(3) of this section; and

(ii) The foreign refiner containing the information determined under paragraph (k)(3)(i) of this section, and including identification of the port at which the product was off loaded.

(5) Any United States importer shall meet all other requirements of this subpart for any imported gasoline that is not classified as RFS–FRGAS under paragraph (k)(2) of this section.

(l) *Truck imports of RFS–FRGAS produced at a foreign refinery.* (1) Any refiner whose RFS–FRGAS is transported into the United States by truck may petition EPA to use alternative procedures to meet all the following requirements:

(i) Certification under paragraph (c)(2) of this section.

(ii) Load port and port of entry testing requirements under paragraphs (d) and (e) of this section.

(iii) Importer testing requirements under paragraph (k)(3) of this section.

(2) These alternative procedures must ensure RFS–FRGAS remains segregated from Non-RFS–FRGAS until it is imported into the United States. The petition will be evaluated based on whether it adequately addresses the following:

(i) Provisions for monitoring pipeline shipments, if applicable, from the refinery, that ensure segregation of RFS–FRGAS from that refinery from all other gasoline.

(ii) Contracts with any terminals and/or pipelines that receive and/or transport RFS–FRGAS that prohibit the commingling of RFS–FRGAS with Non-RFS–FRGAS or RFS–FRGAS from other foreign refineries.

(iii) Attest procedures to be conducted annually by an independent third party that review loading records and import documents based on volume reconciliation, or other criteria, to confirm that all RFS–FRGAS remains segregated throughout the distribution system.

(3) The petition described in this section must be submitted to EPA along with the application for a small refinery or small refiner exemption under this subpart.

(m) *Additional attest requirements for importers of RFS–FRGAS.* The following additional procedures shall be carried out by any importer of RFS–FRGAS as part of the attest engagement required for importers under this subpart K.

(1) Obtain listings of all tenders of RFS–FRGAS. Agree the total volume of tenders from the listings to the gasoline inventory reconciliation analysis required in § 80.133(b), and to the volumes determined by the third party under paragraph (d) of this section.

(2) For each tender under paragraph (m)(1) of this section, where the gasoline is loaded onto a marine vessel, report as a finding the name and country of registration of each vessel, and the volumes of RFS–FRGAS loaded onto each vessel.

(3) Select a sample from the list of vessels identified in paragraph (m)(2) of this section used to transport RFS–FRGAS, in accordance with the guidelines in § 80.127, and for each vessel selected perform the following:

(i) Obtain the report of the independent third party, under paragraph (d) of this section.

(A) Agree the information in these reports with regard to vessel identification and gasoline volume.

(B) Identify, and report as a finding, each occasion the load port and port of entry volume results differ by more than the amount allowed in paragraph (e)(2) of this section, and determine whether all of the requirements of paragraph (e)(2) of this section have been met.

(ii) Obtain the documents used by the independent third party to determine transportation and storage of the RFS–FRGAS from the refinery to the load port, under paragraph (d) of this section. Obtain tank activity records for any storage tank where the RFS–FRGAS is stored, and pipeline activity records for any pipeline used to transport the RFS–FRGAS prior to being loaded onto the vessel. Use these records to determine whether the RFS–FRGAS was produced at the refinery

that is the subject of the attest engagement, and whether the RFS–FRGAS was mixed with any Non-RFS–FRGAS or any RFS–FRGAS produced at a different refinery.

(4) Select a sample from the list of vessels identified in paragraph (m)(2) of this section used to transport RFS–FRGAS, in accordance with the guidelines in § 80.127, and for each vessel selected perform the following:

(i) Obtain a commercial document of general circulation that lists vessel arrivals and departures, and that includes the port and date of departure of the vessel, and the port of entry and date of arrival of the vessel.

(ii) Agree the vessel's departure and arrival locations and dates from the independent third party and United States importer reports to the information contained in the commercial document.

(5) Obtain separate listings of all tenders of RFS–FRGAS, and perform the following:

(i) Agree the volume of tenders from the listings to the gasoline inventory reconciliation analysis in § 80.133(b).

(ii) Obtain a separate listing of the tenders under this paragraph (m)(5) where the gasoline is loaded onto a marine vessel. Select a sample from this listing in accordance with the guidelines in § 80.127, and obtain a commercial document of general circulation that lists vessel arrivals and departures, and that includes the port and date of departure and the ports and dates where the gasoline was off loaded for the selected vessels. Determine and report as a finding the country where the gasoline was off loaded for each vessel selected.

(6) In order to complete the requirements of this paragraph (m), an auditor shall:

(i) Be independent of the foreign refiner or importer;

(ii) Be licensed as a Certified Public Accountant in the United States and a citizen of the United States, or be approved in advance by EPA based on a demonstration of ability to perform the procedures required in §§ 80.125 through 80.127, 80.130, 80.1164, and this paragraph (m); and

(iii) Sign a commitment that contains the provisions specified in paragraph (f) of this section with regard to activities and documents relevant to compliance with the requirements of §§ 80.125 through 80.127, 80.130, 80.1164, and this paragraph (m).

(n) *Withdrawal or suspension of foreign refiner status.* EPA may withdraw or suspend a foreign refiner's small refinery or small refiner exemption where:

(1) A foreign refiner fails to meet any requirement of this section;

(2) A foreign government fails to allow EPA inspections as provided in paragraph (f)(1) of this section;

(3) A foreign refiner asserts a claim of, or a right to claim, sovereign immunity in an action to enforce the requirements in this subpart; or

(4) A foreign refiner fails to pay a civil or criminal penalty that is not satisfied using the foreign refiner bond specified in paragraph (h) of this section.

(o) *Additional requirements for applications, reports and certificates.* Any application for a small refinery or small refiner exemption, alternative procedures under paragraph (l) of this section, any report, certification, or other submission required under this section shall be:

(1) Submitted in accordance with procedures specified by the Administrator, including use of any forms that may be specified by the Administrator.

(2) Signed by the president or owner of the foreign refiner company, or by that person's immediate designee, and shall contain the following declaration:

I hereby certify: (1) That I have actual authority to sign on behalf of and to bind [insert name of foreign refiner] with regard to all statements contained herein; (2) that I am aware that the information contained herein is being Certified, or submitted to the United States Environmental Protection Agency, under the requirements of 40 CFR part 80, subpart K, and that the information is material for determining compliance under these regulations; and (3) that I have read and understand the information being Certified or submitted, and this information is true, complete and correct to the best of my knowledge and belief after I have taken reasonable and appropriate steps to verify the accuracy thereof. I affirm that I have read and understand the provisions of 40 CFR part 80, subpart K, including 40 CFR 80.1165 apply to [insert name of foreign refiner]. Pursuant to Clean Air Act section 113(c) and 18 U.S.C. 1001, the penalty for furnishing

false, incomplete or misleading information in this certification or submission is a fine of up to $10,000 U.S., and/or imprisonment for up to five years.

[72 FR 24004, May 1, 2007, as amended at 73 FR 57258, Oct. 2, 2008]

§ 80.1166 What are the additional requirements under this subpart for a foreign producer of cellulosic biomass ethanol or waste derived ethanol?

(a) *Foreign producer of cellulosic biomass ethanol or waste derived ethanol.* For purposes of this subpart, a foreign producer of cellulosic biomass ethanol or waste derived ethanol is a person located outside the United States, the Commonwealth of Puerto Rico, the Virgin Islands, Guam, American Samoa, and the Commonwealth of the Northern Mariana Islands (collectively referred to in this section as ''the United States'') that has been approved by EPA to assign RINs to cellulosic biomass ethanol or waste derived ethanol that the foreign producer produces and exports to the United States, hereinafter referred to as a ''foreign producer'' under this section.

(b) *General requirements.* (1) An approved foreign producer under this section must meet all requirements that apply to cellulosic biomass ethanol or waste derived ethanol producers under this subpart, except to the extent otherwise specified in paragraph (b)(2) of this section.

(2)(i) The independent third party that conducts the facility verification required under § 80.1155(a) must inspect the foreign producer's facility and submit a report to EPA which describes in detail the physical plant and its operation.

(ii) The independent third party that conducts the facility verification required under § 80.1155(a) must be a licensed Professional Engineer in the chemical engineering field, but need not be based in the United States. The independent third party must include documentation of its qualifications as a licensed Professional Engineer in the report required in paragraph (b)(2)(i) of this section.

(iii) The requirements of paragraphs (b)(2)(i) and (ii) of this section must be met before a foreign entity may be approved as a foreign producer under this subpart.

(c) *Designation, foreign producer certification, and product transfer documents.*

(1) Any approved foreign producer under this section must designate each batch of cellulosic biomass ethanol or waste derived ethanol as ''RFS–FRETH'' at the time the ethanol is produced.

(2) On each occasion when RFS–FRETH is loaded onto a vessel or other transportation mode for transport to the United States, the foreign producer shall prepare a certification for each batch of RFS–FRETH; the certification shall include the report of the independent third party under paragraph (d) of this section, and all the following additional information:

(i) The name and EPA registration number of the company that produced the RFS–FRETH.

(ii) The identification of the ethanol as RFS–FRETH.

(iii) The volume of RFS–FRETH being transported, in gallons.

(3) On each occasion when any person transfers custody or title to any RFS–FRETH prior to its being imported into the United States, it must include all the following information as part of the product transfer document information:

(i) Designation of the ethanol as RFS–FRETH.

(ii) The certification required under paragraph (c)(2) of this section.

(d) *Load port independent testing and refinery identification.* (1) On each occasion that RFS–FRETH is loaded onto a vessel for transport to the United States the foreign producer shall have an independent third party do all the following:

(i) Inspect the vessel prior to loading and determine the volume of any tank bottoms.

(ii) Determine the volume of RFS–FRETH loaded onto the vessel (exclusive of any tank bottoms before loading).

(iii) Obtain the EPA-assigned registration number of the foreign producer.

(iv) Determine the name and country of registration of the vessel used to

transport the RFS–FRETH to the United States.

(v) Determine the date and time the vessel departs the port serving the foreign producer.

(vi) Review original documents that reflect movement and storage of the RFS–FRETH from the foreign producer to the load port, and from this review determine the following:

(A) The facility at which the RFS–FRETH was produced.

(B) That the RFS–FRETH remained segregated from Non-RFS–FRETH and other RFS–FRETH produced by a different foreign producer.

(2) The independent third party shall submit a report to the following:

(i) The foreign producer containing the information required under paragraph (d)(1) of this section, to accompany the product transfer documents for the vessel.

(ii) The Administrator containing the information required under paragraph (d)(1) of this section, within thirty days following the date of the independent third party's inspection. This report shall include a description of the method used to determine the identity of the foreign producer facility at which the ethanol was produced, assurance that the ethanol remained segregated as specified in paragraph (j)(1) of this section, and a description of the ethanol's movement and storage between production at the source facility and vessel loading.

(3) The independent third party must:

(i) Be approved in advance by EPA, based on a demonstration of ability to perform the procedures required in this paragraph (d);

(ii) Be independent under the criteria specified in § 80.65(e)(2)(iii); and

(iii) Sign a commitment that contains the provisions specified in paragraph (f) of this section with regard to activities, facilities and documents relevant to compliance with the requirements of this paragraph (d).

(e) *Comparison of load port and port of entry testing.* (1)(i) Any foreign producer and any United States importer of RFS–FRETH shall compare the results from the load port testing under paragraph (d) of this section, with the port of entry testing as reported under paragraph (k) of this section, for the volume of ethanol, except as specified in paragraph (e)(1)(ii) of this section.

(ii) Where a vessel transporting RFS–FRETH off loads the ethanol at more than one United States port of entry, the requirements of paragraph (e)(1)(i) of this section do not apply at subsequent ports of entry if the United States importer obtains a certification from the vessel owner that the requirements of paragraph (e)(1)(i) of this section were met and that the vessel has not loaded any ethanol between the first United States port of entry and the subsequent port of entry.

(2)(i) If the temperature-corrected volumes determined at the port of entry and at the load port differ by more than one percent, the number of RINs associated with the ethanol shall be calculated based on the lesser of the two volumes in paragraph (e)(1)(i) of this section.

(ii) Where the port of entry volume is the lesser of the two volumes in paragraph (e)(1)(i) of this section, the importer shall calculate the difference between the number of RINs originally assigned by the foreign producer and the number of RINs calculated under § 80.1126 for the volume of ethanol as measured at the port of entry, and retire that amount of RINs in accordance with paragraph (k)(4) of this section.

(f) *Foreign producer commitments.* Any foreign producer shall commit to and comply with the provisions contained in this paragraph (f) as a condition to being approved as a foreign producer under this subpart.

(1) Any United States Environmental Protection Agency inspector or auditor must be given full, complete and immediate access to conduct inspections and audits of the foreign producer facility.

(i) Inspections and audits may be either announced in advance by EPA, or unannounced.

(ii) Access will be provided to any location where:

(A) Ethanol is produced;

(B) Documents related to ethanol producer operations are kept; and

(C) RFS–FRETH is stored or transported between the foreign producer and the United States, including storage tanks, vessels and pipelines.

(iii) Inspections and audits may be by EPA employees or contractors to EPA.

(iv) Any documents requested that are related to matters covered by inspections and audits must be provided to an EPA inspector or auditor on request.

(v) Inspections and audits by EPA may include review and copying of any documents related to the following:

(A) The volume of RFS–FRETH.

(B) The proper classification of gasoline as being RFS–FRETH;

(C) Transfers of title or custody to RFS–FRETH.

(D) Work performed and reports prepared by independent third parties and by independent auditors under the requirements of this section, including work papers.

(vi) Inspections and audits by EPA may include interviewing employees.

(vii) Any employee of the foreign producer must be made available for interview by the EPA inspector or auditor, on request, within a reasonable time period.

(viii) English language translations of any documents must be provided to an EPA inspector or auditor, on request, within 10 working days.

(ix) English language interpreters must be provided to accompany EPA inspectors and auditors, on request.

(2) An agent for service of process located in the District of Columbia shall be named, and service on this agent constitutes service on the foreign producer or any employee of the foreign producer for any action by EPA or otherwise by the United States related to the requirements of this subpart.

(3) The forum for any civil or criminal enforcement action related to the provisions of this section for violations of the Clean Air Act or regulations promulgated thereunder shall be governed by the Clean Air Act, including the EPA administrative forum where allowed under the Clean Air Act.

(4) United States substantive and procedural laws shall apply to any civil or criminal enforcement action against the foreign producer or any employee of the foreign producer related to the provisions of this section.

(5) Applying to be an approved foreign producer under this section, or producing or exporting ethanol under such approval, and all other actions to comply with the requirements of this subpart relating to such approval constitute actions or activities covered by and within the meaning of the provisions of 28 U.S.C. 1605(a)(2), but solely with respect to actions instituted against the foreign producer, its agents and employees in any court or other tribunal in the United States for conduct that violates the requirements applicable to the foreign producer under this subpart, including conduct that violates the False Statements Accountability Act of 1996 (18 U.S.C. 1001) and section 113(c)(2) of the Clean Air Act (42 U.S.C. 7413).

(6) The foreign producer, or its agents or employees, will not seek to detain or to impose civil or criminal remedies against EPA inspectors or auditors, whether EPA employees or EPA contractors, for actions performed within the scope of EPA employment related to the provisions of this section.

(7) The commitment required by this paragraph (f) shall be signed by the owner or president of the foreign producer company.

(8) In any case where RFS–FRETH produced at a foreign producer facility is stored or transported by another company between the refinery and the vessel that transports the RFS–FRETH to the United States, the foreign producer shall obtain from each such other company a commitment that meets the requirements specified in paragraphs (f)(1) through (7) of this section, and these commitments shall be included in the foreign producer's application to be an approved foreign producer under this subpart.

(g) *Sovereign immunity*. By submitting an application to be an approved foreign producer under this subpart, or by producing and exporting ethanol to the United States under such approval, the foreign producer, and its agents and employees, without exception, become subject to the full operation of the administrative and judicial enforcement powers and provisions of the United States without limitation based on sovereign immunity, with respect to actions instituted against the foreign producer, its agents and employees in any court or other tribunal in the United States for conduct that violates

the requirements applicable to the foreign producer under this subpart, including conduct that violates the False Statements Accountability Act of 1996 (18 U.S.C. 1001) and section 113(c)(2) of the Clean Air Act (42 U.S.C. 7413).

(h) *Bond posting.* Any foreign producer shall meet the requirements of this paragraph (h) as a condition to approval as a foreign producer under this subpart.

(1) The foreign producer shall post a bond of the amount calculated using the following equation:

$$\text{Bond} = G * \$\,0.01$$

Where:

Bond = amount of the bond in U.S. dollars.

G = The largest volume of ethanol produced at the foreign producer's facility and exported to the United States, in gallons, during a single calendar year among the most recent of the following calendar years, up to a maximum of five calendar years: The calendar year immediately preceding the date the refinery's application is submitted, the calendar year the application is submitted, and each succeeding calendar year.

(2) Bonds shall be posted by any of the following methods:

(i) Paying the amount of the bond to the Treasurer of the United States.

(ii) Obtaining a bond in the proper amount from a third party surety agent that is payable to satisfy United States administrative or judicial judgments against the foreign producer, provided EPA agrees in advance as to the third party and the nature of the surety agreement.

(iii) An alternative commitment that results in assets of an appropriate liquidity and value being readily available to the United States provided EPA agrees in advance as to the alternative commitment.

(3) Bonds posted under this paragraph (h) shall:

(i) Be used to satisfy any judicial judgment that results from an administrative or judicial enforcement action for conduct in violation of this subpart, including where such conduct violates the False Statements Accountability Act of 1996 (18 U.S.C. 1001) and section 113(c)(2) of the Clean Air Act (42 U.S.C. 7413);

(ii) Be provided by a corporate surety that is listed in the United States Department of Treasury Circular 570 ''Companies Holding Certificates of Authority as Acceptable Sureties on Federal Bonds''; and

(iii) Include a commitment that the bond will remain in effect for at least five years following the end of the latest annual reporting period that the foreign producer produces ethanol pursuant to the requirements of this subpart.

(4) On any occasion a foreign producer bond is used to satisfy any judgment, the foreign producer shall increase the bond to cover the amount used within 90 days of the date the bond is used.

(5) If the bond amount for a foreign producer increases, the foreign producer shall increase the bond to cover the shortfall within 90 days of the date the bond amount changes. If the bond amount decreases, the foreign refiner may reduce the amount of the bond beginning 90 days after the date the bond amount changes.

(i) *English language reports.* Any document submitted to EPA by a foreign producer shall be in English language, or shall include an English language translation.

(j) *Prohibitions.* (1) No person may combine RFS–FRETH with any Non-RFS–FRETH, and no person may combine RFS–FRETH with any RFS–FRETH produced at a different refinery, until the importer has met all the requirements of paragraph (k) of this section.

(2) No foreign producer or other person may cause another person to commit an action prohibited in paragraph (j)(1) of this section, or that otherwise violates the requirements of this section.

(k) *Requirements for United States importers of RFS–FRETH.* Any United States importer shall meet the following requirements:

(1) Each batch of imported RFS–FRETH shall be classified by the importer as being RFS–FRETH.

(2) Ethanol shall be classified as RFS–FRETH according to the designation by the foreign producer if this designation is supported by product transfer documents prepared by the foreign producer as required in paragraph (c) of this section.

(3) For each ethanol batch classified as RFS–FRETH, any United States importer shall have an independent third party do all the following:

(i) Determine the volume of gasoline in the vessel.

(ii) Use the foreign producer's RFS–FRETH certification to determine the name and EPA-assigned registration number of the foreign producer that produced the RFS–FRETH.

(iii) Determine the name and country of registration of the vessel used to transport the RFS–FRETH to the United States.

(iv) Determine the date and time the vessel arrives at the United States port of entry.

(4) Where the importer is required to retire RINs under paragraph (e)(2) of this section, the importer must report the retired RINs in the applicable reports under § 80.1152.

(5) Any importer shall submit reports within 30 days following the date any vessel transporting RFS–FRETH arrives at the United States port of entry to the following:

(i) The Administrator containing the information determined under paragraph (k)(3) of this section.

(ii) The foreign producer containing the information determined under paragraph (k)(3)(i) of this section, and including identification of the port at which the product was off loaded, and any RINs retired under paragraph (e)(2) of this section.

(6) Any United States importer shall meet all other requirements of this subpart for any imported ethanol or other renewable fuel that is not classified as RFS–FRETH under paragraph (k)(2) of this section.

(l) *Truck imports of RFS–FRETH produced by a foreign producer.* (1) Any foreign producer whose RFS–FRETH is transported into the United States by truck may petition EPA to use alternative procedures to meet all the following requirements:

(i) Certification under paragraph (c)(2) of this section.

(ii) Load port and port of entry testing under paragraphs (d) and (e) of this section.

(iii) Importer testing under paragraph (k)(3) of this section.

(2) These alternative procedures must ensure RFS–FRETH remains segregated from Non-RFS–FRETH until it is imported into the United States. The petition will be evaluated based on whether it adequately addresses the following:

(i) Contracts with any facilities that receive and/or transport RFS–FRETH that prohibit the commingling of RFS–FRETH with Non-RFS–FRETH or RFS–FRETH from other foreign producers.

(ii) Attest procedures to be conducted annually by an independent third party that review loading records and import documents based on volume reconciliation to confirm that all RFS–FRETH remains segregated.

(3) The petition described in this section must be submitted to EPA along with the application for approval as a foreign producer under this subpart.

(m) *Additional attest requirements for producers of RFS–FRETH.* The following additional procedures shall be carried out by any producer of RFS–FRETH as part of the attest engagement required for renewable fuel producers under this subpart K.

(1) Obtain listings of all tenders of RFS–FRETH. Agree the total volume of tenders from the listings to the volumes determined by the third party under paragraph (d) of this section.

(2) For each tender under paragraph (m)(1) of this section, where the ethanol is loaded onto a marine vessel, report as a finding the name and country of registration of each vessel, and the volumes of RFS–FRETH loaded onto each vessel.

(3) Select a sample from the list of vessels identified in paragraph (m)(2) of this section used to transport RFS–FRETH, in accordance with the guidelines in § 80.127, and for each vessel selected perform the following:

(i) Obtain the report of the independent third party, under paragraph (d) of this section, and of the United States importer under paragraph (k) of this section.

(A) Agree the information in these reports with regard to vessel identification and ethanol volume.

(B) Identify, and report as a finding, each occasion the load port and port of entry volume results differ by more

than the amount allowed in paragraph (e) of this section, and determine whether the importer retired the appropriate amount of RINs as required under paragraph (e)(2) of this section, and submitted the applicable reports under § 80.1152 in accordance with paragraph (k)(4) of this section.

(ii) Obtain the documents used by the independent third party to determine transportation and storage of the RFS–FRETH from the foreign producer's facility to the load port, under paragraph (d) of this section. Obtain tank activity records for any storage tank where the RFS–FRETH is stored, and activity records for any mode of transportation used to transport the RFS–FRGAS prior to being loaded onto the vessel. Use these records to determine whether the RFS–FRETH was produced at the foreign producer's facility that is the subject of the attest engagement, and whether the RFS–FRETH was mixed with any Non-RFS–FRETH or any RFS–FRETH produced at a different facility.

(4) Select a sample from the list of vessels identified in paragraph (m)(2) of this section used to transport RFS–FRETH, in accordance with the guidelines in § 80.127, and for each vessel selected perform the following:

(i) Obtain a commercial document of general circulation that lists vessel arrivals and departures, and that includes the port and date of departure of the vessel, and the port of entry and date of arrival of the vessel.

(ii) Agree the vessel's departure and arrival locations and dates from the independent third party and United States importer reports to the information contained in the commercial document.

(5) Obtain a separate listing of the tenders under this paragraph (m)(5) where the gasoline is loaded onto a marine vessel. Select a sample from this listing in accordance with the guidelines in § 80.127, and obtain a commercial document of general circulation that lists vessel arrivals and departures, and that includes the port and date of departure and the ports and dates where the ethanol was off loaded for the selected vessels. Determine and report as a finding the country where the ethanol was off loaded for each vessel selected.

(6) In order to complete the requirements of this paragraph (m) an auditor shall:

(i) Be independent of the foreign producer;

(ii) Be licensed as a Certified Public Accountant in the United States and a citizen of the United States, or be approved in advance by EPA based on a demonstration of ability to perform the procedures required in §§ 80.125 through 80.127, 80.130, 80.1164, and this paragraph (m); and

(iii) Sign a commitment that contains the provisions specified in paragraph (f) of this section with regard to activities and documents relevant to compliance with the requirements of §§ 80.125 through 80.127, 80.130, 80.1164, and this paragraph (m).

(n) *Withdrawal or suspension of foreign producer approval.* EPA may withdraw or suspend a foreign producer's approval where any of the following occur:

(1) A foreign producer fails to meet any requirement of this section.

(2) A foreign government fails to allow EPA inspections as provided in paragraph (f)(1) of this section.

(3) A foreign producer asserts a claim of, or a right to claim, sovereign immunity in an action to enforce the requirements in this subpart.

(4) A foreign producer fails to pay a civil or criminal penalty that is not satisfied using the foreign producer bond specified in paragraph (g) of this section.

(o) *Additional requirements for applications, reports and certificates.* Any application for approval as a foreign producer, alternative procedures under paragraph (l) of this section, any report, certification, or other submission required under this section shall be:

(1) Submitted in accordance with procedures specified by the Administrator, including use of any forms that may be specified by the Administrator.

(2) Signed by the president or owner of the foreign producer company, or by that person's immediate designee, and shall contain the following declaration:

I hereby certify: (1) That I have actual authority to sign on behalf of and to bind [insert name of foreign producer] with regard to

all statements contained herein; (2) that I am aware that the information contained herein is being Certified, or submitted to the United States Environmental Protection Agency, under the requirements of 40 CFR part 80, subpart K, and that the information is material for determining compliance under these regulations; and (3) that I have read and understand the information being Certified or submitted, and this information is true, complete and correct to the best of my knowledge and belief after I have taken reasonable and appropriate steps to verify the accuracy thereof. I affirm that I have read and understand the provisions of 40 CFR part 80, subpart K, including 40 CFR 80.1165 apply to [insert name of foreign producer]. Pursuant to Clean Air Act section 113(c) and 18 U.S.C. 1001, the penalty for furnishing false, incomplete or misleading information in this certification or submission is a fine of up to $10,000 U.S., and/or imprisonment for up to five years.

[72 FR 24004, May 1, 2007, as amended at 73 FR 57258, Oct. 2, 2008]

§ 80.1167 What are the additional requirements under this subpart for a foreign RIN owner?

(a) *Foreign RIN owner*. For purposes of this subpart, a foreign RIN owner is a person located outside the United States, the Commonwealth of Puerto Rico, the Virgin Islands, Guam, American Samoa, and the Commonwealth of the Northern Mariana Islands (collectively referred to in this section as ''the United States'') that has been approved by EPA to own RINs.

(b) *General Requirement*. An approved foreign RIN owner must meet all requirements that apply to persons who own RINs under this subpart.

(c) *Foreign RIN owner commitments*. Any person shall commit to and comply with the provisions contained in this paragraph (c) as a condition to being approved as a foreign RIN owner under this subpart.

(1) Any United States Environmental Protection Agency inspector or auditor must be given full, complete and immediate access to conduct inspections and audits of the foreign RIN owner's place of business.

(i) Inspections and audits may be either announced in advance by EPA, or unannounced; and

(ii) Access will be provided to any location where documents related to RINs the foreign RIN owner has obtained, sold, transferred or held are kept.

(iii) Inspections and audits may be by EPA employees or contractors to EPA.

(iv) Any documents requested that are related to matters covered by inspections and audits must be provided to an EPA inspector or auditor on request.

(v) Inspections and audits by EPA may include review and copying of any documents related to the following:

(A) Transfers of title to RINs.

(B) Work performed and reports prepared by independent auditors under the requirements of this section, including work papers.

(vi) Inspections and audits by EPA may include interviewing employees.

(vii) Any employee of the foreign RIN owner must be made available for interview by the EPA inspector or auditor, on request, within a reasonable time period.

(viii) English language translations of any documents must be provided to an EPA inspector or auditor, on request, within 10 working days.

(ix) English language interpreters must be provided to accompany EPA inspectors and auditors, on request.

(2) An agent for service of process located in the District of Columbia shall be named, and service on this agent constitutes service on the foreign RIN owner or any employee of the foreign RIN owner for any action by EPA or otherwise by the United States related to the requirements of this subpart.

(3) The forum for any civil or criminal enforcement action related to the provisions of this section for violations of the Clean Air Act or regulations promulgated thereunder shall be governed by the Clean Air Act, including the EPA administrative forum where allowed under the Clean Air Act.

(4) United States substantive and procedural laws shall apply to any civil or criminal enforcement action against the foreign RIN owner or any employee of the foreign RIN owner related to the provisions of this section.

(5) Submitting an application to be a foreign RIN owner, and all other actions to comply with the requirements of this subpart constitute actions or activities covered by and within the meaning of the provisions of 28 U.S.C.

1605(a)(2), but solely with respect to actions instituted against the foreign RIN owner, its agents and employees in any court or other tribunal in the United States for conduct that violates the requirements applicable to the foreign RIN owner under this subpart, including conduct that violates the False Statements Accountability Act of 1996 (18 U.S.C. 1001) and section 113(c)(2) of the Clean Air Act (42 U.S.C. 7413).

(6) The foreign RIN owner, or its agents or employees, will not seek to detain or to impose civil or criminal remedies against EPA inspectors or auditors, whether EPA employees or EPA contractors, for actions performed within the scope of EPA employment related to the provisions of this section.

(7) The commitment required by this paragraph (c) shall be signed by the owner or president of the foreign RIN owner business.

(d) *Sovereign immunity*. By submitting an application to be a foreign RIN owner under this subpart, the foreign entity, and its agents and employees, without exception, become subject to the full operation of the administrative and judicial enforcement powers and provisions of the United States without limitation based on sovereign immunity, with respect to actions instituted against the foreign RIN owner, its agents and employees in any court or other tribunal in the United States for conduct that violates the requirements applicable to the foreign RIN owner under this subpart, including conduct that violates the False Statements Accountability Act of 1996 (18 U.S.C. 1001) and section 113(c)(2) of the Clean Air Act (42 U.S.C. 7413).

(e) *Bond posting*. Any foreign entity shall meet the requirements of this paragraph (e) as a condition to approval as a foreign RIN owner under this subpart.

(1) The foreign entity shall post a bond of the amount calculated using the following equation:

$$\text{Bond} = G * \$0.01$$

Where:

Bond = amount of the bond in U.S. dollars.

G = The total of the number of gallon-RINs the foreign entity expects to sell or transfer during the first calendar year that the foreign entity is a RIN owner, plus the number of gallon-RINs the foreign entity expects to sell or transfer during the next four calendar years. After the first calendar year, the bond amount shall be based on the actual number of gallon-RINs sold or transferred during the current calendar year and the number held at the conclusion of the current averaging year, plus the number of gallon-RINs sold or transferred during the four most recent calendar years preceding the current calendar year. For any year for which there were fewer than four preceding years in which the foreign entity sold or transferred RINs, the bond shall be based on the total of the number of gallon-RINs sold or transferred during the current calendar year and the number held at the end of the current calendar year, plus the number of gallon-RINs sold or transferred during any calendar year preceding the current calendar year, plus the number of gallon-RINs expected to be sold or transferred during subsequent calendar years, the total number of years not to exceed four calendar years in addition to the current calendar year.

(2) Bonds shall be posted by doing any of the following:

(i) Paying the amount of the bond to the Treasurer of the United States.

(ii) Obtaining a bond in the proper amount from a third party surety agent that is payable to satisfy United States administrative or judicial judgments against the foreign RIN owner, provided EPA agrees in advance as to the third party and the nature of the surety agreement.

(iii) An alternative commitment that results in assets of an appropriate liquidity and value being readily available to the United States, provided EPA agrees in advance as to the alternative commitment.

(3) Bonds posted under this paragraph (e) shall:

(i) Be used to satisfy any judicial judgment that results from an administrative or judicial enforcement action for conduct in violation of this subpart, including where such conduct violates the False Statements Accountability Act of 1996 (18 U.S.C. 1001) and section 113(c)(2) of the Clean Air Act (42 U.S.C. 7413);

(ii) Be provided by a corporate surety that is listed in the United States Department of Treasury Circular 570 ''Companies Holding Certificates of Authority as Acceptable Sureties on Federal Bonds''; and

(iii) Include a commitment that the bond will remain in effect for at least five years following the end of latest reporting period in which the foreign RIN owner obtains, sells, transfers or holds RINs.

(4) On any occasion a foreign RIN owner bond is used to satisfy any judgment, the foreign RIN owner shall increase the bond to cover the amount used within 90 days of the date the bond is used.

(f) *English language reports.* Any document submitted to EPA by a foreign RIN owner shall be in English language, or shall include an English language translation.

(g) *Prohibitions.* (1) A foreign RIN owner is prohibited from obtaining, selling, transferring or holding any RIN that is in excess of the number for which the bond requirements of this section have been satisfied.

(2) Any RIN that is sold, transferred or held that is in excess of the number for which the bond requirements of this section have been satisfied is an invalid RIN under § 80.1131.

(3) Any RIN that is obtained from a person located outside the United States that is not an approved foreign RIN owner under this section is an invalid RIN under § 80.1131.

(4) No foreign RIN owner or other person may cause another person to commit an action prohibited in this paragraph (g), or that otherwise violates the requirements of this section.

(h) *Additional attest requirements for foreign RIN owners.* The following additional requirements apply to any foreign RIN owner as part of the attest engagement required for RIN owners under this subpart K.

(1) The attest auditor must be independent of the foreign RIN owner.

(2) The attest auditor must be licensed as a Certified Public Accountant in the United States and a citizen of the United States, or be approved in advance by EPA based on a demonstration of ability to perform the procedures required in §§ 80.125 through 80.127, 80.130, and 80.1164.

(3) The attest auditor must sign a commitment that contains the provisions specified in paragraph (c) of this section with regard to activities and documents relevant to compliance with the requirements of §§ 80.125 through 80.127, 80.130, and 80.1164.

(i) *Withdrawal or suspension of foreign RIN owner status.* EPA may withdraw or suspend its approval of a foreign RIN owner where any of the following occur:

(1) A foreign RIN owner fails to meet any requirement of this section, including, but not limited to, the bond requirements.

(2) A foreign government fails to allow EPA inspections as provided in paragraph (c)(1) of this section.

(3) A foreign RIN owner asserts a claim of, or a right to claim, sovereign immunity in an action to enforce the requirements in this subpart.

(4) A foreign RIN owner fails to pay a civil or criminal penalty that is not satisfied using the foreign RIN owner bond specified in paragraph (e) of this section.

(j) *Additional requirements for applications, reports and certificates.* Any application for approval as a foreign RIN owner, any report, certification, or other submission required under this section shall be:

(1) Submitted in accordance with procedures specified by the Administrator, including use of any forms that may be specified by the Administrator.

(2) Signed by the president or owner of the foreign RIN owner company, or by that person's immediate designee, and shall contain the following declaration:

I hereby certify: (1) That I have actual authority to sign on behalf of and to bind [insert name of foreign RIN owner] with regard to all statements contained herein; (2) that I am aware that the information contained herein is being Certified, or submitted to the United States Environmental Protection Agency, under the requirements of 40 CFR part 80, subpart K, and that the information is material for determining compliance under these regulations; and (3) that I have read and understand the information being Certified or submitted, and this information is true, complete and correct to the best of my knowledge and belief after I have taken reasonable and appropriate steps to verify the accuracy thereof. I affirm that I have read and understand the provisions of 40 CFR part 80, subpart K, including 40 CFR 80.1167 apply to [insert name of foreign RIN owner]. Pursuant to Clean Air Act section 113(c) and 18 U.S.C. 1001, the penalty for furnishing false, incomplete or misleading information

in this certification or submission is a fine of up to $10,000 U.S., and/or imprisonment for up to five years.

[72 FR 24004, May 1, 2007, as amended at 73 FR 57259, Oct. 2, 2008]

Subpart L—Gasoline Benzene

SOURCE: 72 FR 8544, Feb. 26, 2007, unless otherwise noted.

§§ 80.1200–80.1219 [Reserved]

GENERAL INFORMATION

§ 80.1220 What are the implementation dates for the gasoline benzene program?

(a) *Benzene standard.* (1) For the annual averaging period beginning January 1, 2011, and for each annual averaging period thereafter, gasoline produced at each refinery of a refiner or imported by an importer, must meet the benzene standard specified in § 80.1230(a), except as otherwise specifically provided for in this subpart.

(2) For the period July 1, 2012 through December 31, 2013, and for each annual averaging period thereafter, gasoline produced at each refinery of a refiner or imported by an importer, must meet the maximum average benzene standard specified in § 80.1230(b), except as otherwise specifically provided for in this subpart.

(3) Small refiners approved under § 80.1340 may defer meeting the benzene standard specified in § 80.1230(a) until the annual averaging period beginning January 1, 2015 and may defer meeting the benzene standard specified in § 80.1230(b) until the averaging period beginning July 1, 2016, as described in § 80.1342.

(b) *Early credit generation.* (1) Effective with the averaging period beginning June 1, 2007, a refiner for each of its refineries that has an approved benzene baseline per § 80.1285 may generate early benzene credits in accordance with the provisions of § 80.1275.

(2) Early benzene credits may be generated through the end of the averaging period ending December 31, 2010, or through the end of the averaging period ending December 31, 2014 for small refiners approved under § 80.1340.

(c) *Standard credit generation.* (1) Effective with the annual averaging period beginning January 1, 2011, a refiner for any of its refineries or an importer for its imported gasoline, may generate standard benzene credits in accordance with the provisions of § 80.1290.

(2) Effective with the annual averaging period beginning January 1, 2015, a small refiner approved under § 80.1340, for any of its refineries, may generate standard benzene credits in accordance with the provisions of § 80.1290.

§ 80.1225 Who must register with EPA under the gasoline benzene program?

(a) Refiners and importers that are registered by EPA under § 80.76, § 80.103, § 80.190, or § 80.810 are deemed to be registered for purposes of this subpart.

(b) Refiners and importers subject to the requirements in § 80.1230 that are not registered by EPA under §§ 80.76, 80.103, 80.190 or 80.810 shall provide to EPA the information required in § 80.76 by September 30, 2010, or not later than three months in advance of the first date that such person produces or imports gasoline, whichever is later.

(c) Refiners that plan to generate early credits under § 80.1275 and that are not registered by EPA under §§ 80.76, 80.103, 80.190, or 80.810 must provide to EPA the information required in § 80.76 not later than 60 days prior to the end of the first year of credit generation.

GASOLINE BENZENE REQUIREMENTS

§ 80.1230 What are the gasoline benzene requirements for refiners and importers?

(a) *Annual average benzene standard.* (1) Except as specified in paragraph (c) of this section, a refinery's or importer's average gasoline benzene concentration in any annual averaging period shall not exceed 0.62 volume percent.

(2) Compliance with the standard specified in paragraph (a)(1) of this section, or creation of a deficit in accordance with paragraph (c) of this section, is determined in accordance with § 80.1240(a).

(3) The annual averaging period for achieving compliance with the requirement of paragraph (a)(1) of this section is January 1 through December 31 of

each calendar year beginning January 1, 2011, or beginning January 1, 2015 for small refiners approved under § 80.1340.

(4) Refinery grouping per § 80.101(h) does not apply to compliance with the gasoline benzene requirement specified in this paragraph (a).

(5) Gasoline produced at foreign refineries that is subject to the gasoline benzene requirements per § 80.1235 shall be included in the importer's compliance determination beginning January 1, 2011, or beginning January 1, 2015 for small foreign refiners approved under § 80.1340.

(b) *Maximum average benzene standard.* (1) A refinery's or importer's maximum average gasoline benzene concentration in any averaging period shall not exceed 1.30 volume percent.

(2) Compliance with the standard specified in paragraph (b)(1) of this section is determined in accordance with § 80.1240(b).

(3) The averaging period for achieving compliance with the requirement of paragraph (b)(1) of this section is July 1, 2012 through December 31, 2013 and each calendar year thereafter, or July 1, 2016 through December 31, 2017, and each calendar year thereafter for small refiners approved under § 80.1340.

(c) *Deficit carry-forward.* (1) A refinery or importer creates a benzene deficit for a given averaging period when its compliance benzene value, per § 80.1240(a), is greater than the benzene standard specified in paragraph (a) of this section.

(2) A refinery or importer may carry the benzene deficit forward to the calendar year following the year the benzene deficit is created but only if no deficit had been previously carried forward to the year the deficit is created. If a refinery or importer carries forward a deficit, the following provisions apply in the second year:

(i) The refinery or importer must achieve compliance with the benzene standard specified in paragraph (a) of this section.

(ii) The refinery or importer must achieve further reductions in its gasoline benzene concentrations sufficient to offset the benzene deficit of the previous year.

(iii) Benzene credits may be used, per § 80.1295, to meet the requirements of paragraphs (c)(2)(i) and (ii) of this section.

(iv) A refinery that has banked credits per § 80.1295(a)(3) must use all of its banked credits to achieve compliance with the benzene standard specified in paragraph (a) of this section before creating a deficit.

(3) EPA may allow an extended period of deficit carry-forward if it grants hardship relief under §§ 80.1335 or 80.1336 from the annual average standard specified in paragraph (a) of this section.

§ 80.1235 What gasoline is subject to the benzene requirements of this subpart?

(a) For the purposes of determining compliance with the requirements of § 80.1230, all of the following products that are produced or imported for use in the United States during a refinery's or importer's applicable compliance period are collectively ''gasoline'' and are to be included in a refinery's or importer's compliance determination under § 80.1240, except as provided in paragraph (b) of this section:

(1) Reformulated gasoline.

(2) Conventional gasoline.

(3) Reformulated gasoline blendstock for oxygenate blending (''RBOB'').

(4) Conventional gasoline blendstock that becomes finished conventional gasoline upon the addition of oxygenate (''CBOB'').

(5) Blendstock that has been combined with finished gasoline, other blendstock, transmix, or gasoline produced from transmix to produce gasoline.

(6) Blendstock that has been combined with previously certified gasoline (''PCG'') to produce gasoline. Such blendstock must be sampled in accordance with the provisions at § 80.1347(a)(5).

(b) The following products are not to be included in a refinery's or importer's compliance determination under § 80.1240:

(1) Blendstock that has not been combined with other blendstock or finished gasoline to produce gasoline.

(2) Oxygenate added to finished gasoline, RBOB, or CBOB downstream of the refinery that produced the gasoline or import facility where the gasoline was imported.

(3) Butane added to finished gasoline, RBOB, CBOB downstream of the refinery that produced the gasoline or import facility where the gasoline was imported.

(4) Gasoline produced by separating gasoline from transmix.

(5) PCG.

(6) Gasoline produced or imported for use in Guam, American Samoa, and the Commonwealth of the Northern Mariana Islands.

(7) Gasoline exported for use outside the United States.

(8) Gasoline produced by a small refiner approved under § 80.1340 prior to January 1, 2015, or prior to the small refiner's first compliance period pursuant to § 80.1342(a), whichever is earlier.

(9) Gasoline that is used to fuel aircraft, racing vehicles or racing boats that are used only in sanctioned racing events, provided that —

(i) Product transfer documents associated with such gasoline, and any pump stand from which such gasoline is dispensed, identify the gasoline either as gasoline that is restricted for use in aircraft, or as gasoline that is restricted for use in racing motor vehicles or racing boats that are used only in sanctioned events;

(ii) The gasoline is completely segregated from all other gasoline throughout production, distribution and sale to the ultimate consumer; and

(iii) The gasoline is not made available for use as motor vehicle gasoline, or dispensed for use in motor vehicles, except for motor vehicles used only in sanctioned racing events.

(10) California gasoline, as defined in § 80.1236.

§ 80.1236 What requirements apply to California gasoline?

(a) *Definition*. For purposes of this subpart, ''California gasoline'' means any gasoline designated by the refiner or importer as for use only in California and that is actually used in California.

(b) *California gasoline exemption*. California gasoline that complies with all the requirements of this section is exempt from the requirements in § 80.1230.

(c) *Requirements for California gasoline*. The following requirements apply to California gasoline:

(1) Each batch of California gasoline must be designated as such by its refiner or importer.

(2) Designated California gasoline must be kept segregated from gasoline that is not California gasoline at all points in the distribution system.

(3) Designated California gasoline must ultimately be used in the State of California and not used elsewhere in the United States.

(4) In the case of California gasoline produced outside the State of California, the transferors and transferees must meet the product transfer document requirements under § 80.81(g).

(5) Gasoline that is ultimately used in any part of the United States outside of the State of California must comply with the requirements specified in § 80.1230, regardless of any designation as California gasoline.

§ 80.1238 How is a refinery's or importer's average benzene concentration determined?

(a) The average benzene concentration of gasoline produced at a refinery or imported by an importer for an applicable averaging period is calculated according to the following equation:

$$B_{avg} = \frac{\sum_{i=1}^{n} (V_i \times B_i)}{\sum_{i=1}^{n} V_i}$$

Where:

B_{avg} = Average benzene concentration for the applicable averaging period (volume percent benzene).

i = Individual batch of gasoline produced at the refinery or imported during the applicable averaging period.

n = Total number of batches of gasoline produced at the refinery or imported during the applicable annual averaging period.

V_i = Volume of gasoline in batch i (gallons).

B_i = Benzene concentration of batch i (volume percent benzene), per § 80.46(e).

(b) A refiner or importer may include the volume of oxygenate added downstream from the refinery or import facility in the calculation specified in paragraph (a) of this section, provided the following requirements are met:

(1) For oxygenate added to conventional gasoline, the refiner or importer must comply with the requirements of

§ 80.101(d)(4)(ii) and the calculation methodologies of § 80.101(g)(3).

(2) For oxygenate added to RBOB, the refiner or importer must comply with the requirements of § 80.69(a).

(c) Refiners and importers must exclude from the calculation specified in paragraph (a) of this section all of the following:

(1) Gasoline that was not produced at the refinery or imported by the importer.

(2) Except as provided in paragraph (b) of this section, any blendstocks or unfinished gasoline transferred to others.

(3) Gasoline that has been included in the compliance calculations for another refinery or importer.

(4) Gasoline exempted from the standards under § 80.1235(b).

§ 80.1240 How is a refinery's or importer's compliance with the gasoline benzene requirements of this subpart determined?

(a) A refinery's or importer's compliance with the annual average benzene standard at § 80.1230(a) is determined as follows:

(1)(i) The compliance benzene value for a refinery or importer is:

$$CBV_y = V_y \times \left(\frac{B_{avg,y}}{100}\right) + D_{y-1} - BC - OC$$

Where:

CBV_y = Compliance benzene value (gallons benzene) for year y.

V_y = Gasoline volume produced or imported in year y (gallons).

$B_{avg,y}$ = Average benzene concentration in year y (volume percent benzene), calculated in accordance with § 80.1238.

D_{y-1} = Benzene deficit from the previous reporting period, per § 80.1230(c) (gallons benzene).

BC = Banked benzene credits used to show compliance (gallons benzene).

OC = Benzene credits obtained by the refinery or importer used to show compliance (gallons benzene).

(ii) Benzene credits used in the calculation specified in paragraph (a)(1)(i) of this section must be used in accordance with the requirements at § 80.1295.

(2)(i) If $CBV_y \leq V_y \times (0.62)/100$, then compliance with the benzene requirement at § 80.1230(a) is achieved for calendar year y.

(ii) If $CBV_y > V_y \times (0.62)/100$, then compliance with the benzene requirement at § 80.1230(a) is not achieved for calendar year y, and a deficit is created per § 80.1230(c). The deficit value to be included in the following year's compliance calculation per paragraph (a) of this section is calculated as follows:

$$D_y = CBV_y - V_y \times \left(\frac{0.62}{100}\right)$$

Where:

D_y = Benzene deficit created in compliance period y (gallons benzene).

(b) Compliance with the maximum average benzene standard at § 80.1230(b) is achieved by a refinery or importer if the value of B_{avg} calculated in accordance with § 80.1238(a) is no greater 1.30 volume percent for an applicable averaging period per § 80.1230(b)(3).

Averaging, Banking and Trading (ABT) Program

§ 80.1270 Who may generate benzene credits under the ABT program?

(a) *Early benzene credits.* Early benzene credits are credits generated prior to 2011, or prior to 2015 if generated by a small refiner approved under § 80.1340.

(1)(i) Early credits may be generated under § 80.1275 by a refiner for any refinery it owns that has an approved benzene baseline under § 80.1285, including a refinery of a foreign refiner that is subject to the provisions of § 80.1363.

(ii) The refinery specified in paragraph (a)(1)(i) of this section must process crude oil and/or intermediate feedstocks through refinery processing units.

(iii) Early benzene credits shall be calculated separately for each refinery of a refiner.

(iv) A refinery that is approved for early compliance under § 80.1334 may not generate early credits for the gasoline subject to the early compliance provisions.

(2)(i) A refinery that was shut down during the entire 2004–2005 benzene baseline period is not eligible to generate early credits under § 80.1275.

(ii) A refinery not in full production, excluding normal refinery downtime, or not showing consistent or regular gasoline production activity during

2004–2005 may be eligible to generate early benzene credits under § 80.1275 upon petition to and approval by EPA, pursuant to § 80.1285(d).

(3) Importers may not generate early credits.

(b) *Standard benzene credits.* Standard benzene credits are credits generated after 2010, or after 2014 if generated by a small refiner approved under § 80.1340.

(1) Unless otherwise provided for elsewhere in this subpart, standard credits may be generated under § 80.1290 as follows:

(i) A refiner may generate standard credits separately for each of its refineries.

(ii) An importer may generate standard credits for all of its imported gasoline.

(2) Oxygenate blenders, butane blenders, and transmix producers may not generate standard credits.

(3) Foreign refiners may not generate standard credits.

§ 80.1275 How are early benzene credits generated?

(a) For each averaging period per paragraph (b) of this section in which a refinery plans to generate early credits, its average gasoline benzene concentration calculated according to § 80.1238(a) must be at least 10% lower than its benzene baseline concentration approved under § 80.1280.

(b) The early credit averaging periods are as follows:

(1) For 2007, the seven-month period from June 1, 2007 through December 31, 2007.

(2) For 2008, 2009 and 2010, the 12-month calendar year.

(3) For small refiners approved under § 80.1340, the 12-month calendar years 2011, 2012, 2013, and 2014 in addition to the periods specified in paragraphs (b)(1) and (b)(2) of this section.

(c) The number of early benzene credits generated shall be calculated for each applicable averaging period as follows:

$$EC_y = \left[\frac{B_{Base} - B_{avg,y}}{100}\right] \times V_{e,y}$$

Where:

EC_y = Early credits generated in averaging period y (gallons benzene).

B_{Base} = Baseline benzene concentration of the refinery (volume percent benzene), per § 80.1280(a).

$B_{avg,y}$ = Average benzene concentration of gasoline produced at the refinery during averaging period y (volume percent benzene), per § 80.1238.

$V_{e,y}$ = Total volume of gasoline produced at the refinery during averaging period y (gallons).

(d) A refinery that plans to generate early credits must also show that it has met all of the following requirements prior to or during the first early credit averaging period, per paragraph (b) of this section, in which it generates early credits:

(1) Since 2005, has made operational changes and/or improvements in benzene control technology to reduce gasoline benzene levels, including at least one of the following:

(i) Treating the heavy straight run naphtha entering the reformer using light naphtha splitting and/or isomerization.

(ii) Treating the reformate stream exiting the reformer using benzene extraction or benzene saturation.

(iii) Directing additional refinery streams to the reformer for treatment described paragraphs (d)(1)(i) and (ii) of this section.

(iv) Directing reformate streams to other refineries with treatment capabilities described in paragraph (d)(1)(ii) of this section.

(v) Providing for benzene alkylation.

(2)(i) A refiner may petition EPA to approve, for purposes of paragraph (d)(1) of this section, the use of operational changes and/or improvements in benzene control technology that are not listed in paragraph (d)(1) of this section to reduce gasoline benzene levels at a refinery.

(ii) The petition specified in paragraph (d)(2)(i) of this section must be sent to: U.S. EPA, NVFEL–ASD, Attn: MSAT2 Early Credit Benzene Reduction Technology, 2000 Traverwood Dr., Ann Arbor, MI 48105.

(iii) The petition specified in paragraph (d)(2)(i) of this section must show how the benzene control technology improvement or operational change results in a net reduction in the refinery's average gasoline benzene level, exclusive of benzene reductions due simply to blending practices.

(iv) The petition specified in paragraph (d)(2)(i) of this section must be submitted to EPA prior to the start of the first averaging period in which the refinery plans to generate early credits.

(v) The refiner must provide additional information as requested by EPA.

(3) Has not included gasoline blendstock streams transferred to, from, or between refineries, except as noted in paragraph (d)(1)(iv) of this section.

(e) Early benzene credits calculated in accordance with paragraph (c) of this section shall be expressed to the nearest gallon. Fractional values shall be rounded down if less than 0.50, and rounded up if greater than or equal to 0.50.

[72 FR 8544, Feb. 26, 2007, as amended at 73 FR 61363, Oct. 16, 2008]

§ 80.1280 How are refinery benzene baselines calculated?

(a) A refinery's benzene baseline is based on the refinery's 2004–2005 average gasoline benzene concentration, calculated according to the following equation:

$$B_{Base} = \frac{\sum_{i=1}^{n} (V_i \times B_i)}{\sum_{i=1}^{n} V_i}$$

Where:

B_{Base} = Benzene baseline concentration (volume percent benzene).

$_i$ = Individual batch of gasoline produced at the refinery from January 1, 2004 through December 31, 2005.

n = Total number of batches of gasoline produced at the refinery from January 1, 2004 through December 31, 2005 (or the total number of batches of gasoline pursuant to § 80.1285(d)).

V_i = Volume of gasoline in batch i (gallons).

B_i = Benzene content of batch i (volume percent benzene).

(b) A refiner for a refinery that included oxygenate blended downstream of the refinery in compliance calculations for RFG or conventional gasoline for calendar years 2004 or 2005 under § 80.69 or § 80.101(d)(4) must include the volume and benzene concentration of this oxygenate in the benzene baseline calculation for that refinery under paragraph (a) of this section.

§ 80.1285 How does a refiner apply for a benzene baseline?

(a) A benzene baseline application must be submitted for each refinery that plans to generate early credits under § 80.1275. The application must include the information specified in paragraph (c) of this section and must be submitted to EPA at least 60 days before the first averaging period in which the refinery plans to generate early credits.

(b) For U.S. Postal delivery, the benzene baseline application shall be sent to: Attn: MSAT2 Benzene, Mail Stop 6406J, U.S. Environmental Protection Agency, 1200 Pennsylvania Ave., NW., Washington, DC 20460. For commercial delivery: MSAT2 Benzene, 202–343–9038, U.S. Environmental Protection Agency, 1310 L Street, NW., Washington, DC 20005.

(c) The benzene baseline application must include the following information:

(1) A listing of the names and addresses of all refineries owned by the company.

(2) The benzene baseline for gasoline produced in 2004–2005 at the refinery, calculated in accordance with § 80.1280.

(3) Copies of the annual reports required under § 80.75 for RFG and § 80.105 for conventional gasoline.

(4) A letter signed by the president, chief operating officer, or chief executive officer, of the company, or his/her designee, stating that the information contained in the benzene baseline determination is true to the best of his/her knowledge.

(5) Name, address, phone number, facsimile number and e-mail address of a corporate contact person.

(d) For a refinery that may be eligible to generate early credits under § 80.1270(a)(2)(ii), a refiner may submit to EPA a benzene baseline application per the requirements of this section. The refiner must also submit information regarding the nature and cause of the refinery's production activity that resulted in irregular or less than full production, how it affected the baseline benzene concentration, and whether

and how an alternative calculation to the calculation specified in § 80.1280 produces a more representative benzene baseline value. Upon consideration of the submitted information, EPA may approve a benzene baseline for such a refinery.

(e) EPA will notify the refiner of approval of the refinery's benzene baseline or any deficiencies in the application. However, except for applications submitted in accordance with paragraph (d) of this section, the refinery's benzene baseline application may be considered approved 60 days after EPA's receipt of the baseline application, subject to paragraph (f) of this section.

(f) If at any time the baseline submitted in accordance with the requirements of this section is determined to be incorrect, EPA will notify the refiner of the corrected baseline.

§ 80.1290 How are standard benzene credits generated?

(a) The standard credit averaging periods are the calendar years beginning January 1, 2011, or beginning January 1, 2015 for small refiners approved under § 80.1340.

(b) [Reserved]

(c)(1) The number of standard benzene credits generated shall be calculated annually for each applicable averaging period according to the following equation:

$$SC_y = \left[\frac{0.62 - B_{avg,y}}{100}\right] \times V_y$$

Where:

SC_y = Standard credits generated in year y (gallons benzene).

$B_{avg,y}$ = Annual average benzene concentration for year y (volume percent benzene), per § 80.1238.

V_y = Total volume of gasoline produced or imported in year y (gallons).

(2) No credits shall be generated unless the value SC_y is positive.

(d) Standard benzene credits calculated in accordance with paragraph (c) of this section shall be expressed to the nearest gallon. Fractional values shall be rounded down if less than 0.50, and rounded up if greater than or equal to 0.50.

§ 80.1295 How are gasoline benzene credits used?

(a) *Credit use.* (1) Gasoline benzene credits may be used to comply with the gasoline benzene standard of § 80.1230(a) provided that—

(i) The gasoline benzene credits were generated according to §§ 80.1275 or 80.1290.

(ii) The recordkeeping requirements for gasoline benzene credits under § 80.1350 are met.

(iii) The gasoline benzene credits are correctly reported according to §§ 80.1352 and 80.1354.

(iv) The conditions of this section are met.

(2) Gasoline benzene credits generated under §§ 80.1275 and 80.1290 may be used interchangeably in all credit use scenarios, subject to the credit life provisions specified in paragraph (c) of this section.

(3) Gasoline benzene credits may be used by a refiner or importer to comply with the gasoline benzene content standard of § 80.1230(a), may be banked by a refiner or importer for future use or transfer, may be transferred to another refinery or importer within a company (intracompany trading), or may be transferred to another refiner or importer outside of the company.

(b) *Credit transfers.* (1) Gasoline benzene credits obtained from another refinery or importer may be used to comply with the gasoline benzene content requirement of § 80.1230(a) provided the following conditions are met:

(i) The credits are generated and reported according to the requirements of this subpart, and the transferred credits have not expired, per paragraph (c) of this section.

(ii) Any credit transfer takes place no later than the last day of February following the calendar year averaging period when the credits are used.

(iii) The credit has not been transferred more than twice. The first transfer by the refinery or importer that generated the credit may only be made to a refiner or importer that intends to use the credit; if the transferee cannot use the credit, it may make the second, and final, transfer only to a refiner or importer that intends to use or to terminate the credit. In no case may a

credit be transferred more than twice before being used or terminated.

(iv) The credit transferor has applied any gasoline benzene credits necessary to meet its own annual compliance requirements (including any deficit carried forward, pursuant to § 80.1230(c), if applicable) before transferring any gasoline benzene credits to any other refiner or importer.

(v) The credit transferor does not create a deficit as a result of a credit transfer.

(vi) The transferor supplies records to the transferee indicating the year the gasoline benzene credits were generated, the identity of the refiner (and refinery) or importer that generated the gasoline benzene credits, and the identity of the transferring entity if it is not the same entity that generated the gasoline benzene credits.

(2) In the case of gasoline benzene credits that have been calculated or created improperly, or that EPA has otherwise determined to be invalid, the following provisions apply:

(i) Invalid gasoline benzene credits cannot be used to achieve compliance with the gasoline benzene content requirement of § 80.1230(a), regardless of the transferee's good-faith belief that the gasoline benzene credits were valid.

(ii) The refiner or importer that used the gasoline benzene credits and any transferor of the gasoline benzene credits must adjust their credit records, reports, and compliance calculations as necessary to reflect the proper gasoline benzene credits.

(iii) Any properly created gasoline benzene credits existing in the transferor's credit balance following the corrections and adjustments specified in paragraph (b)(2)(ii) of this section must first be applied to correct the invalid transfers to the transferee, before the transferor uses, trades or banks the gasoline benzene credits.

(c) *Credit life*. (1)(i) Early credits, per § 80.1275, may be used for compliance purposes under § 80.1240(a) for any of the following annual averaging periods: 2011, 2102, 2013.

(ii) Early credits, per § 80.1275, may be used for compliance purposes under § 80.1240(a) by small refiners approved under § 80.1340 for any of the following averaging periods: 2015, 2016, 2017.

(2)(i) Standard credits, per § 80.1290, may be used for compliance purposes under § 80.1240(a) within five years from the year they were generated, except as noted under paragraph (c)(2)(ii) of this section. Example: Standard credits generated during 2011 may be used to achieve compliance under § 80.1240(a) for any calendar year averaging period prior to the 2017 averaging period.

(ii) Standard credits, per § 80.1290, may be used for compliance purposes under § 80.1240(a) within seven years from the year they were generated if traded to and ultimately used by a small refiner approved under § 80.1340. Example: Standard credits generated in 2011 may be used to achieve compliance under § 80.1240(a) for any calendar year averaging period prior to the 2019 averaging period if traded to and ultimately used by a small refiner approved under § 80.1340.

(d) *Deficit provision limitation*. A refiner or importer possessing gasoline benzene credits must use all gasoline benzene credits in its possession before applying the benzene deficit provisions of § 80.1230(c).

HARDSHIP PROVISIONS

§ 80.1334 What are the requirements for early compliance with the gasoline benzene program?

(a)(1) A refinery may comply with the benzene requirements at § 80.1230 for its RFG and/or conventional gasoline (CG) prior to the 2011 compliance period if it applies for this early compliance option as specified in paragraph (b) of this section, and is approved by EPA.

(2) Only refineries that produce gasoline by processing crude and/or intermediate feedstocks through refinery processing units may apply for this early compliance option.

(b) Refiners must submit an application in order to be considered for early compliance as described in this section.

(1) Applications for early compliance as described in this section must be submitted to EPA by December 31, 2007.

(2) Applications must be sent to: U.S. EPA, NVFEL–ASD, Attn: MSAT2 Early Compliance, 2000 Traverwood Dr., Ann Arbor, MI 48105.

(3) Application must be made separately for a refinery's RFG and CG pools.

(4) The early compliance application must show that all the following criteria are met:

(i) For an RFG early compliance application—

(A) The refinery's RFG baseline value under § 80.915 is greater than or equal to 30 percent reduction.

(B) The refinery's 2003 RFG annual average benzene concentration was less than or equal to 0.62 vol%.

(C) The refinery's 2003 RFG annual average sulfur concentration was less than or equal to 140 ppm.

(D) The refinery's 2003 RFG annual average MTBE concentration was greater than or equal to 6 vol%.

(ii) For a CG early compliance application—

(A) The refinery's CG baseline under § 80.915 is less than or equal to 80 mg/mile.

(B) The refinery's 2003 CG annual average benzene concentration was less than or equal to 0.62 vol%.

(C) The refinery's 2003 CG annual average sulfur concentration was less than or equal to 140 ppm.

(D) The refinery's 2003 CG annual average MTBE concentration was greater than or equal to 6 vol%.

(5) In addition, the application must demonstrate that the refinery has extremely limited ability to adjust its operations in order to comply with its applicable RFG or CG toxics performance requirements under § 80.815.

(6) The refiner must provide additional information as requested by EPA.

(c)(1) If approved for early compliance with the provisions of this subpart, the refinery may comply with the provisions of § 80.1230 as follows:

(i) For the compliance period beginning January 1, 2007, and each annual compliance period through 2010; or

(ii) For the compliance period beginning January 1, 2008, and each annual compliance period through 2010.

(2) The refinery must notify EPA under which compliance period specified in paragraph (c)(1) of this section it will begin compliance.

(3) Beginning with the compliance period chosen pursuant to paragraph (c)(2) of this section—

(i) For early compliance approved for a refinery's RFG pool, the toxics air pollutants emissions performance requirements specified in §§ 80.41(e)(1) and (f)(1) and 80.815 shall not apply to the reformulated gasoline produced by the refinery.

(ii) For early compliance approved for a refinery's CG pool, the annual average exhaust toxics emissions requirements specified in §§ 80.101(c)(2) and 80.815 shall not apply to conventional gasoline produced by the refinery.

(4) Refineries approved for early compliance under this section may not generate early credits under § 80.1275.

(d) If EPA finds that a refiner provided false or inaccurate information in its application for early compliance, the early compliance approval will be void *ab initio*.

§ 80.1335 Can a refiner seek relief from the requirements of this subpart?

(a) A refiner may apply for relief from the requirements specified in § 80.1230(a) or (b) for a refinery, if it can show that—

(1) Unusual circumstances exist that impose extreme hardship and significantly affect the ability to comply with the gasoline benzene standards at § 80.1230(a) or (b) by the applicable date(s); and

(2) It has made best efforts to comply with the requirements of this subpart.

(b) A refiner must apply for and be approved for relief under this section.

(1) An application must include the following information:

(i) A plan demonstrating how the refiner will comply with the requirements of § 80.1230(a) or (b), as applicable, as expeditiously as possible. The plan shall include a showing that contracts are or will be in place for engineering and construction of benzene reduction technology, a plan for applying for and obtaining any permits necessary for construction, a description of plans to obtain necessary capital, and a detailed estimate of when the requirements of § 80.1230(a) or (b), as applicable, will be met.

(ii) A detailed description of the refinery configuration and operations including, at minimum, the following information:

(A) The refinery's total reformer unit throughput capacity;

(B) The refinery's total crude capacity;

(C) Total crude capacity of any other refineries owned by the same entity;

(D) Total volume of gasoline production at the refinery;

(E) Total volume of other refinery products;

(F) Geographic location(s) where the refinery's gasoline will be sold;

(G) Detailed descriptions of efforts to obtain capital for refinery investments;

(H) Bond rating of entity that owns the refinery; and

(I) Estimated capital investment needed to comply with the requirements of this subpart.

(iii) For a hardship related to complying with the requirement at § 80.1230(a), detailed descriptions of efforts to obtain credits, including the prices of credits available, but deemed uneconomical by the refiner.

(2) Applicants must also provide any other relevant information requested by EPA.

(3) An application for relief from the requirements specified in § 80.1230(b) must be submitted to EPA by January 1, 2008, or by January 1, 2013 for small refiners approved under § 80.1340.

(c)(1) Approval of a hardship application under this section for relief from the annual average benzene standard at § 80.1230(a) shall be in the form of an extended period of deficit carry-forward, per § 80.1230(c), for such period of time as EPA determines is appropriate.

(2) Approval of a hardship application under this section for relief from the maximum average benzene standard at § 80.1230(b) shall be in the form of a waiver of the standard for such period of time as EPA determines is appropriate.

(3) EPA may deny any application for appropriate reasons, including unacceptable environmental impact.

(d) EPA may impose any other reasonable conditions on relief provided under this section, including rescinding, or reducing the length of, the extended deficit carry-forward period if conditions or situations change between approval of the hardship application and the end of the approved relief period.

§ 80.1336 What if a refiner or importer cannot produce gasoline conforming to the requirements of this subpart?

In extreme, unusual, and unforeseen circumstances (for example, a natural disaster or a refinery fire) that are clearly outside the control of the refiner or importer and that could not have been avoided by the exercise of prudence, diligence, and due care, EPA may permit a refinery or importer to exceed the allowable average benzene levels specified in § 80.1230(a) or (b), as applicable, if—

(a) It is in the public interest to do so;

(b) The refiner or importer exercised prudent planning and was not able to avoid the violation and has taken all reasonable steps to minimize the extent of the nonconformity;

(c) The refiner or importer can show how the requirements at § 80.1230(a) or (b), as applicable, will be achieved as expeditiously as possible;

(d) The refiner or importer agrees to make up any air quality detriment associated with the nonconformity, where practicable; and

(e) The refiner or importer pays to the U.S. Treasury an amount equal to the economic benefit of the nonconformity minus the amount expended making up the air quality detriment pursuant to paragraph (d) of this section.

SMALL REFINER PROVISIONS

§ 80.1338 What criteria must be met to qualify as a small refiner for the gasoline benzene requirements of this subpart?

(a) A small refiner is any person that demonstrates that it—

(1) Produced gasoline at a refinery by processing crude oil through refinery processing units from January 1, 2005 through December 31, 2005.

(2) Employed an average of no more than 1,500 people, based on the average number of employees for all pay periods from January 1, 2005 through December 31, 2005.

(3) Had a corporate average crude oil capacity less than or equal to 155,000 barrels per calendar day (bpcd) for 2005.

(4) Following the submission of a small refiner application, pursuant to § 80.1340, has been approved as a small refiner for this subpart.

(b) For the purpose of determining the number of employees and the crude oil capacity under paragraph (a) of this section, the following determinations shall be observed:

(1) The refiner shall include the employees and crude oil capacity of any subsidiary companies, any parent company, subsidiaries of the parent company in which the parent has a controlling interest, and any joint venture partners.

(2) For any refiner owned by a governmental entity, the number of employees and total crude oil capacity as specified in paragraph (a) of this section shall include all employees and crude oil production of the government to which the governmental entity is a part.

(3) Any refiner owned and controlled by an Alaska Regional or Village Corporation organized pursuant to the Alaska Native Claims Settlement Act (43 U.S.C. 1601) is not considered an affiliate of such entity, or with other concerns owned by such entity, solely because of their common ownership.

(c) Notwithstanding the provisions of paragraph (a) of this section, a refiner that reactivates a refinery that it had previously operated, and that was shut down or non-operational for the entire period between January 1, 2005 and December 31, 2005, may apply for small refiner status in accordance with the provisions of § 80.1340.

§ 80.1339 Who is not eligible for the provisions for small refiners?

The following are not eligible for the hardship provisions for small refiners:

(a) A refiner with one or more refineries built after December 31, 2005.

(b) A refiner that exceeds the employee or crude oil capacity criteria under § 80.1338 but that meets these criteria after December 31, 2005, regardless of whether the reduction in employees or crude capacity is due to operational changes at the refinery or a company sale or reorganization.

(c) Importers.

(d) A refiner that produce gasoline other than by processing crude oil through refinery processing units.

(e)(1) A small refiner approved under § 80.1340 that subsequently ceases production of gasoline from processing crude oil through refinery processing units, employs more than 1,500 people, or exceeds the 155,000 bpcd crude oil capacity limit after December 31, 2005 as a result of merger with or acquisition of or by another entity, is disqualified as a small refiner, except that this shall not apply in the case of a merger between two previously approved small refiners. If disqualification occurs, the refiner shall notify EPA in writing no later than 20 days following this disqualifying event.

(2) Except as provided under paragraph (e)(3) of this section, any refiner whose status changes as specified in paragraph (e)(1) under this paragraph (b) shall meet the applicable standards of § 80.1230 within 30 months of the disqualifying event for all its refineries. However, such period shall not extend beyond December 31, 2014.

(3) A refiner may apply to EPA for an additional six months to comply with the standards of § 80.1230 if it believes that more than 30 months will be required for the necessary engineering, permitting, construction, and start-up work to be completed. Such applications must include detailed technical information supporting the need for additional time. EPA will base its decision to approve additional time on the information provided by the refiner and on other relevant information. In no case will EPA extend the compliance date beyond December 31, 2014.

(4) During the period provided under paragraph (e)(2) of this section, and any extension provided under paragraph (e)(3) of this section, the refiner may not generate gasoline benzene credits under § 80.1275 or § 80.1290.

(f) A small refiner approved under § 80.1340 which notifies EPA that it wishes to withdraw its small refiner status pursuant to § 80.1340(g).

EFFECTIVE DATE NOTE: At 75 FR 26131, May 11, 2010, § 80.1339 was amended by revising paragraph (e)(4), effective July 12, 2010. For the convenience of the user, the revised text is set forth as follows:

§ 80.1339 Who is not eligible for the provisions for small refiners?

* * * * *

(e) * * *

(4) During the period provided under paragraph (e)(2) of this section, and any extension provided under paragraph (e)(3) of this section, the refiner may not generate gasoline benzene credits under § 80.1275(b)(3) for any of its refineries where under § 80.1342 the refiner was previously allowed to defer compliance with the standards in §§ 80.1230(a) and 80.1230(b).

* * * * *

§ 80.1340 How does a refiner obtain approval as a small refiner?

(a) Applications for small refiner status must be submitted to EPA by December 31, 2007.

(b) For U.S. Postal delivery, applications for small refiner status must be sent to: Attn: MSAT2 Benzene, Mail Stop 6406J, U.S. Environmental Protection Agency, 1200 Pennsylvania Ave., NW., Washington, DC 20460. For commercial delivery: MSAT2 Benzene, 202–343–9038, U.S. Environmental Protection Agency, 1310 L Street, NW., Washington, DC 20005.

(c) The small refiner status application must contain the following information for the company seeking small refiner status, and for all subsidiary companies, all parent companies, all subsidiaries of the parent companies, and all joint venture partners:

(1) *Employees*. For joint ventures, the total number of employees includes the combined employee count of all corporate entities in the venture. For government-owned refiners, the total employee count includes all government employees.

(i) Pursuant to paragraph (c) of this section, a listing of each company facility and each facility's address where any employee, as specified in paragraph (a)(1) of this section, worked during the 12 months preceding January 1, 2006.

(ii) The average number of employees at each facility based upon the number of employees for each pay period for the 12 months preceding January 1, 2006.

(iii) The type of business activities carried out at each location.

(iv) In the case of a refiner that reactivates a refinery that it previously owned and operated and that was shut down or non-operational between January 1, 2005 and January 1, 2006, include the following:

(A) Pursuant to paragraph (c) of this section, a listing of each company refinery each refinery's address where any employee, as specified in paragraph (a)(1) of this section, worked since the refiner acquired or reactivated the refinery.

(B) The average number of employees at any such reactivated refinery during each calendar year since the refiner reactivated the refinery.

(C) The type of business activities carried out at each location.

(2) *Crude oil capacity*.

(i) The total corporate crude oil capacity of each refinery as reported to the Energy Information Administration (EIA) of the U.S. Department of Energy (DOE), for the period January 1, 2005 through December 31, 2005.

(ii) The information submitted to EIA is presumed to be correct. In cases where a company disagrees with this information, the company may petition EPA with appropriate data to correct the record when the company submits its application for small refiner status.

(3) The type of business activity carried out at each location.

(4) For each refinery, an indication of the small refiner option(s), pursuant to § 80.1342, intended to be utilized at the refinery.

(5) A letter signed by the president, chief operating officer or chief executive officer of the company, or his/her designee, stating that the information contained in the application is true to the best of his/her knowledge, and that the company owned the refinery as of January 1, 2006.

(6) Name, address, phone number, facsimile number, and e-mail address of a corporate contact person.

(d) Approval of a small refiner status application will be based on the information submitted under paragraph (c) of this section and any other relevant information.

(e) EPA will notify a refiner of approval or disapproval of small refiner status by letter.

(1) If approved, all refineries of the refiner may defer meeting the standard specified in § 80.1230(a) until the annual averaging period beginning January 1, 2015, and the standard specified in § 80.1230(b) until the averaging period beginning July 1, 2016.

(2) If disapproved, all refineries of the refiner must meet the standard specified in § 80.1230(a) beginning with the annual averaging period beginning January 1, 2011, and must meet the standard specified in § 80.1230(b) beginning with the averaging period beginning July 1, 2012.

(f) If EPA finds that a refiner provided false or inaccurate information on its application for small refiner status, the refiner's small refiner status will be void *ab initio*.

(g) Prior to January 1, 2014, and upon notification to EPA, a small refiner approved per this section may withdraw its status as a small refiner. Effective on January 1 of the year following such notification, the small refiner will become subject to the standards at § 80.1230.

§ 80.1342 What compliance options are available to small refiners under this subpart?

(a) A refiner that has been approved as a small refiner under § 80.1340 may—

(1)(i) Defer meeting the standard specified in § 80.1230(a) until the annual averaging period beginning January 1, 2015; or

(ii) Meet the standard specified in § 80.1230(a) in any annual averaging period from 2011 through 2014, inclusive, provided it notifies EPA in writing no later than November 15 prior to the year in which it will produce compliant gasoline.

(2)(i) Defer meeting the standard specified in § 80.1230(b) until the averaging period beginning July 1, 2016; or

(ii) Meet the standard specified in § 80.1230(b) in any averaging period specified in § 80.1230(b)(3) prior to the averaging period beginning July 1, 2016 provided it notifies EPA in writing no later than November 15 prior to the year in which it will produce compliant gasoline.

(b) Any refiner that makes an election under paragraphs (a)(1) or (a)(2) of this section must comply with the applicable benzene standards at § 80.1230 beginning with the first averaging period subsequent to the status change.

(c) The provisions of paragraph (a) of this section shall apply separately for each of an approved small refiner's refineries.

§ 80.1343 What hardship relief provisions are available only to small refiners?

(a)(1) In the case of a small refiner approved under § 80.1340 for which compliance with the requirement at § 80.1230(a) would be feasible only through the purchase of credits, but for whom purchase of credits is not practically or economically feasible, EPA may approve a delay of the requirements applicable to the first compliance period for that refiner for up to two years.

(2) No delay in accordance with paragraph (a) of this section will be granted to any small refiner prior to the EPA issuing a review of the credit program.

(3) A small refiner may request one or more extensions of an approved delay if it can continue to demonstrate extreme difficulty in achieving compliance, through the use of credits, with the annual average benzene standard at § 80.1230(a).

(b) In the case of a small refiner approved under § 80.1340 for which compliance with the maximum average benzene requirement at § 80.1230(b) is not feasible, the refiner may apply for hardship relief under § 80.1335.

§ 80.1344 What provisions are available to a non-small refiner that acquires one or more of a small refiner's refineries?

(a) In the case of a refiner that is not an approved small refiner under § 80.1340 and that acquires a refinery from a small refiner approved under § 80.1340, the small refiner provisions of the gasoline benzene program of this subpart continue to apply to the acquired refinery for a period of up to 30 months from the date of acquisition of the refinery. In no case shall this period extend beyond December 31, 2014.

(b) A refiner may apply to EPA for up to an additional six months to comply with the standards of § 80.1230 for the acquired refinery if it believes that more than 30 months would be required

for the necessary engineering, permitting, construction, and start-up work to be completed. Such applications must include detailed technical information supporting the need for additional time. EPA will base a decision to approve additional time on information provided by the refiner and on other relevant information. In no case shall this period extend beyond December 31, 2014.

(c) A refiner that acquires a refinery from a small refiner approved per § 80.1340 shall notify EPA in writing no later than 20 days following the acquisition.

SAMPLING, TESTING AND RETENTION REQUIREMENTS

§ 80.1347 What are the sampling and testing requirements for refiners and importers?

(a) *Sample and test each batch of gasoline.* (1) The sampling and testing requirements specified in subpart D for reformulated gasoline shall continue to apply to reformulated gasoline and shall be extended to conventional gasoline (CG) for the purpose of complying with the benzene requirements of this subpart, except as modified by paragraphs (a)(2), (a)(3) and (a)(4) of this section.

(2) Refiners and importers shall collect a representative sample from each batch of gasoline produced or imported, according to the earliest applicable date in the following schedule:

(i) Beginning January 1, 2011;

(ii) Beginning January 1, 2015 for small refiners approved under § 80.1340;

(iii) Beginning January 1 of the year prior to 2015 in which a small refiner approved under § 80.1340 has opted, per § 80.1342(a), to begin meeting the standards at § 80.1230;

(iv) Beginning June 1, 2007, for any refinery planning to generate early credits for the averaging period specified at § 80.1275(b)(1);

(v) Beginning January 1 of each averaging period specified at § 80.1275(b)(2) or (b)(3) for which the refinery plans to generate early credits;

(vi) Beginning January 1 of the year, per § 80.1334(c)(1), in which a refinery approved for early compliance under § 80.1334 opts to begin early compliance. The provisions shall only apply to the type of gasoline, RFG or CG, for which early compliance was approved.

(3)(i) Each sample shall be tested in accordance with the methodology specified at § 80.46(e) to determine its benzene concentration for compliance with the requirements of this subpart.

(ii) Independent sample analysis, under § 80.65(f), is not required for conventional gasoline.

(4) Any refiner or importer may release CG prior to obtaining the test results for benzene required under paragraph (a)(1) of this section.

(5) *Exclusion of previously certified gasoline.*

(i) Any refiner who uses previously certified reformulated or conventional gasoline or RBOB to produce conventional gasoline at a refinery, must exclude the previously certified gasoline (''PCG'') for purposes of demonstrating compliance with the benzene standards at § 80.1230.

(ii) To accomplish the exclusion required in paragraph (a)(5)(i) of this section, the refiner must determine the volume and benzene content of the previously certified gasoline used at the refinery and the volume and benzene content of gasoline produced at the refinery, and use the compliance calculation procedures in paragraphs (a)(5)(iii) and (a)(5)(iv) of this section.

(iii) For each batch of previously certified gasoline that is used to produce conventional gasoline the refiner must include the volume and benzene content of the previously certified gasoline as a negative volume and a negative benzene content in the refiner's compliance calculations in accordance with the requirements at § 80.1238.

(iv) For each batch of conventional gasoline produced at the refinery using previously certified gasoline, the refiner must determine the volume and benzene content and include each batch in the refinery's compliance calculations at § 80.1240 without regard to the presence of previously certified gasoline in the batch.

(v) The refiner must use any previously certified gasoline that it includes as a negative batch in its compliance calculations pursuant to § 80.1240 as a component in gasoline production during the annual averaging period in which the previously

certified gasoline was included as a negative batch in the refiner's compliance calculations.

(b) *Batch numbering*. The batch numbering convention of § 80.365(b) shall apply to batches of conventional gasoline beginning with earliest applicable date specified in paragraph (a)(2) of this section.

§ 80.1348 What gasoline sample retention requirements apply to refiners and importers?

Beginning with earliest applicable date specified in § 80.1347(a)(2), the gasoline sample retention requirements specified in subpart H of this part for the gasoline sulfur provisions apply for the purpose of complying with the requirements of this subpart, except that in addition to including the sulfur test result as provided by § 80.335(a)(4)(ii), the refiner, importer, or independent laboratory shall also include with the retained sample the test result for benzene as conducted pursuant to § 80.46(e).

RECORDKEEPING AND REPORTING REQUIREMENTS

§ 80.1350 What records must be kept?

(a) *General requirements*. The recordkeeping requirements specified in §§ 80.74 and 80.104, as applicable, apply for the purpose of complying with the requirements of this subpart; however, duplicate records are not required.

(b) *Additional records that refiners and importers shall keep*. (1) Beginning with earliest applicable date specified in § 80.1347(a)(2), any refiner for each of its refineries, and any importer for the gasoline it imports, shall keep records that include the following information, as applicable:

(i) Its compliance benzene value per § 80.1240, and the calculations used to obtain that value.

(ii) Its benzene baseline value, per § 80.1280, if the refinery or importer submitted a benzene baseline application to EPA per § 80.1285.

(iii) The number of early benzene credits generated under § 80.1275, separately by year of generation.

(iv) The number of early benzene credits obtained, separately by generating refinery and year of generation.

(v) The number of valid credits in possession of the refinery or importer at the beginning of each averaging period, separately by generating facility and year of generation.

(vi) The number of standard credits generated by the refinery or importer under § 80.1290, separately by transferor (if applicable), by facility and by year of generation.

(vii) The number of credits used, separately by generating facility and year of generation.

(viii) If any credits were obtained from, or transferred to, other parties, for each other party, its name, its EPA refinery or importer registration number, and the number of credits obtained from, or transferred to, the other party, and the price per credit.

(ix) The number of credits that expired at the end of each averaging period, separately by generating facility and year of generation.

(x) The number of credits that will be carried over into a subsequent averaging period, separately by generating facility and year of generation.

(xi) Contracts or other commercial documents that establish each transfer of credits from the transferor to the transferee.

(xii) A copy of all reports submitted to EPA under §§ 80.1352 and 80.1354; however, duplicate records are not required.

(2)(i) Beginning July 1, 2012, any refiner for each of its refineries, and any importer for the gasoline it imports, shall include, in the records required by paragraph (b)(1) of this section, its maximum average benzene value for the period July 1, 2012 through December 31, 2013, and for each annual compliance period thereafter.

(ii) Notwithstanding the requirements specified in paragraph (b)(2)(i) of this section, beginning July 1, 2016, a small refiner approved under § 80.1340, for each of its refineries, shall include, in the records required by paragraph (b)(1) of this section, its maximum average benzene value for the period July 1, 2016 through December 31, 2017, and for each annual compliance period thereafter.

(3) Records of all supporting calculations pursuant to paragraphs (b)(1) or (b)(2) of this section shall also be kept.

(c) *Length of time records shall be kept.* Records required in this section shall be kept for five years from the date they were created, except that records relating to credit transfers shall be kept by the transferor for five years from the date the credits were transferred, and shall be kept by the transferee for five years from the date the credits were transferred, used or terminated, whichever is later.

(d) *Make records available to EPA.* On request by EPA, the records specified in this section shall be provided to the Administrator. For records that are electronically generated or maintained, the equipment and software necessary to read the records shall be made available, or upon approval by EPA, electronic records shall be converted to paper documents which shall be provided to the Administrator.

§ 80.1352 What are the pre-compliance reporting requirements for the gasoline benzene program?

(a) Except as provided in paragraph (c) of this section, a refiner for each of its refineries shall submit the following information, as applicable, to EPA by June 1, 2008 and annually thereafter through June 1, 2011, or through June 1, 2015 for small refiners approved under § 80.1340:

(1) Changes to the information submitted in the company's registration;

(2) Changes to the information submitted for any refinery or import facility registration;

(3) *Gasoline production.*

(i) An estimate of the average daily volume (in gallons) of gasoline produced at each refinery. This estimate shall include RFG, RBOB, conventional gasoline and conventional gasoline blendstock that becomes finished gasoline solely upon the addition of oxygenate but shall exclude gasoline exempted pursuant to § 80.1235.

(ii) The volume estimates specified in paragraph (a)(3)(i) of this section must be provided for the periods of June 1, 2007 through December 31, 2007, and calendar years 2008 through 2015.

(4) *Benzene concentration.* An estimate of the average gasoline benzene concentration corresponding to the time periods specified in paragraph (a)(3)(ii) of this section.

(5) *ABT participation.* For each year through 2015, the following information related to crdits shall be provided to EPA, if applicable:

(i) If the refinery is expecting to generate benzene credits per § 80.1275 and/or § 80.1290, the actual or estimated, as applicable, numbers of early credits and standard credits expected to be generated.

(ii) If the refinery is expecting to use benzene credits per § 80.1295, the actual or estimated, as applicable, numbers of early credits and standard credits expected to be banked, transferred or used to achieve compliance in accordance with § 80.1240.

(6) Information on any project schedule by quarter of known or projected completion date, by the stage of the project. See, for example, the five project phases described in EPA's June 2002 Highway Diesel Progress Review report (EPA420–R–02–016, *http://www.epa.gov/otaq/regs/hd2007/420r02016.pdf*): Strategic planning, Planning and front-end engineering, Detailed engineering and permitting, Procurement and Construction, and Commissioning and startup.

(7) Basic information regarding the selected technology pathway for compliance (*e.g.*, precursor re-routing or other technologies, revamp vs. grassroots, etc.).

(8) Whether capital commitments have been made or are projected to be made.

(b) The pre-compliance reports due in 2008 and succeeding years must provide an update of the progress in each of these areas and include actual values where available.

(c) The pre-compliance reporting requirements of this section do not apply to refineries that only produce products exempt from the requirements of this subpart per § 80.1235(b).

§ 80.1354 What are the reporting requirements for the gasoline benzene program?

(a) Beginning with earliest applicable date specified in § 80.1347(a)(2), any refiner for each of its refineries, and any importer for the gasoline it imports, shall submit to EPA an Annual Gasoline Benzene Report that contains the information required in this section,

and such other information as EPA may require for each applicable averaging period.

(b) The Annual Gasoline Benzene Report shall contain the following information:

(1) Benzene volume percent and volume of any RFG, RBOB, and conventional gasoline, separately by batch, produced by the refinery or imported, and the sum of the volumes and the volume-weighted benzene concentration, in volume percent.

(2)(i) The annual average benzene concentration, per § 80.1238.

(ii) The maximum average benzene concentration per § 80.1240(b).

(3) Any benzene deficit from the previous reporting period, per § 80.1230(b).

(4) The number of banked benzene credits from the previous reporting period.

(5) The number of benzene credits generated under § 80.1275, if applicable.

(6) The number of benzene credits generated under § 80.1290, if applicable.

(7) The number of benzene credits transferred to the refinery or importer, per § 80.1295(c), and the cost of the credits, if applicable.

(8) The number of benzene credits transferred from the refinery or importer, per § 80.1295(c), and the price of the credits, if applicable.

(9) The number of benzene credits terminated or expired.

(10) The compliance benzene value per § 80.1240.

(11) The number of banked benzene credits.

(12) Projected credit generation through compliance year 2015.

(13) Projected credit use through compliance year 2015.

(c) EPA may require submission of additional information to verify compliance with the requirements of this subpart.

(d) The report required by paragraph (a) of this section shall be—

(1) Submitted on forms and following procedures specified by the Administrator.

(2) Submitted to EPA by the last day of February each year for the prior calendar year averaging period.

(3) Signed and certified as correct by the owner or a responsible corporate officer of the refiner or importer.

ATTEST ENGAGEMENTS

§ 80.1356 What are the attest engagement requirements for gasoline benzene compliance?

In addition to the requirements for attest engagements that apply to refiners and importers under §§ 80.125 through 80.130, 80.410, and 80.1030, the attest engagements for refiners and importers must include the following:

(a) *EPA Early Credit Generation Baseline Years' Reports.* (1) Obtain and read a copy of the refinery's or importer's annual reports and batch reports filed with EPA for 2004 and 2005 that contain gasoline benzene and gasoline volume information.

(2) Agree the yearly volumes of gasoline and benzene concentration, in volume percent and benzene gallons, reported to EPA in the reports specified in paragraph (a)(1) of this section with the inventory reconciliation analysis under § 80.128.

(3) Verify that the information in the refinery's or importer's batch reports filed with EPA under §§ 80.75 and 80.105, and any laboratory test results, agree with the information contained in the reports specified in paragraph (a)(1) of this section.

(4) Calculate the average benzene concentration for all of the refinery's or importer's gasoline volume over 2004 and 2005 and verify that those values agree with the values reported to EPA per § 80.1285.

(b) *Baseline for Early Credit Generation.* Take the following steps for the first attest reporting period following approval of a benzene baseline:

(1) Obtain the EPA benzene baseline approval letter for the refinery to determine the refinery's applicable benzene baseline under § 80.1285.

(2) Obtain a written statement from the company representative identifying the benzene value used as the refinery's baseline and agree that number to paragraph (b)(1) of this section and to the reports to EPA.

(c) *Early Credit Generation.* The following procedures shall be completed for a refinery or importer that generates early benzene credits per § 80.1275:

(1) Obtain the baseline benzene concentration and gasoline volume from paragraph (a)(4) of this section.

(2) Obtain the annual benzene report per § 80.1354.

(3) If the benzene value under paragraph (c)(2) of this section is at least 10 percent less than the value in paragraph (c)(1) of this section, compute and report as a finding the difference according to § 80.1275.

(4) Compute and report as a finding the total number of benzene credits generated by multiplying the value calculated in paragraph (c)(3) of this section by the volume of gasoline listed in the report specified in paragraph (c)(2) of this section, and agree this number with the number reported to EPA.

(d) *Standard Credit Generation*. The following procedures shall be completed for a refinery or importer that generates benzene credits per § 80.1290:

(1) Obtain the annual average benzene value from the annual benzene report per § 80.1285.

(2) If the annual average benzene value under paragraph (d)(1) of this section is less than 0.62 percent by volume, compute and report as a finding the difference according to § 80.1290.

(3) Compute and report as a finding the total number of benzene credits generated by multiplying the value calculated in paragraph (d)(2) of this section by the volume of gasoline listed in the report specified in paragraph (d)(1) of this section, and agree this number with the number reported to EPA.

(e) *Credits Required*. The following attest procedures shall be completed for refineries and importers:

(1) Obtain the annual average benzene concentration and volume from the annual benzene report per § 80.1285.

(2) If the value in paragraph (e)(1) of this section is greater than 0.62 percent by volume, compute and report as a finding the difference between 0.62 percent by volume and the value in paragraph (e)(1) of this section.

(3) Compute and report as a finding the total benzene credits required by multiplying the value in paragraph (e)(2) of this section times the volume of gasoline in paragraph (e)(1) of this section, and agree this number with the report to EPA.

(4) Obtain a statement from the refiner or importer as to the portion of the deficit under paragraph (e)(3) of this section that was resolved with credits, or that was carried forward as a deficit under § 80.1230(b), and agree these figures with the report to EPA.

(f) *Credit Purchases and Sales*. The following attest procedures shall be completed for a refinery or importer that is a transferor or transferee of credits during an averaging period:

(1) Obtain contracts or other documents for all credits transferred to another refinery or importer during the year being reviewed; compute and report as a finding the number and year of creation of credits represented in these documents as being transferred; and agree these figures with the report to EPA.

(2) Obtain contracts or other documents for all credits received during the year being reviewed; compute and report as a finding the number and year of creation of credits represented in these documents as being received; and agree with the report to EPA.

(g) *Credit Reconciliation*. The following attest procedures shall be completed each year credits were in the refiner's or importer's possession at any time during the year:

(1) Obtain the credits remaining or the credit deficit from the previous year from the refiner's or importer's report to EPA for the previous year.

(2) Compute and report as a finding the net credits remaining at the conclusion of the year being reviewed by totaling credits as follows:

(i) Credits remaining from the previous year; plus

(ii) Credits generated under paragraphs (c) and (d) of this section; plus

(iii) Credits purchased under paragraph (f) of this section; minus

(iv) Credits sold under paragraph (f) of this section; minus

(v) Credits used under paragraphs (e) of this section; minus

(vi) Credits expired; minus

(vii) Credit deficit from the previous year.

(3) Agree the credits remaining or the credit deficit at the conclusion of the

year being reviewed with the report to EPA.

(4) If the refinery or importer had a credit deficit for both the previous year and the year being reviewed, report this fact as a finding.

VIOLATIONS AND PENALTIES

§ 80.1358 What acts are prohibited under the gasoline benzene program?

No person shall—

(a)(1) Produce or import gasoline subject to this subpart that does not comply with the applicable benzene standards under § 80.1230.

(2) Fail to meet any other requirements of this subpart.

(b) Cause another person to commit an act in violation of paragraph (a) of this section.

§ 80.1359 What evidence may be used to determine compliance with the prohibitions and requirements of this subpart and liability for violations of this subpart?

(a) Compliance with the benzene standards of this subpart shall be determined based on the benzene concentration of the gasoline, measured using the methodologies specified in § 80.46(e), and other allowable adjustments. Any evidence or information, including the exclusive use of such evidence or information, may be used to establish the benzene concentration of the gasoline if the evidence or information is relevant to whether the benzene concentration of the gasoline would have been in compliance with the standard if the appropriate sampling and testing methodologies had been correctly performed. Such evidence may be obtained from any source or location and may include, but is not limited to, test results using methods other than those specified in § 80.46(e), business records, and commercial documents.

(b) Determinations of compliance with the requirements of this subpart other than the benzene standards, and determinations of liability for any violation of this subpart, may be based on information from any source or location. Such information may include, but is not limited to, business records and commercial documents.

§ 80.1360 Who is liable for violations under the gasoline benzene program?

(a) The following persons are liable for violations of prohibited acts:

(1) Any refiner or importer that violates § 80.1358(a) is liable for the violation.

(2) Any person that causes another party to violate § 80.1358(a) is liable for a violation of § 80.1358(b).

(3) Any parent corporation is liable for any violations of this subpart that are committed by any of its wholly-owned subsidiaries.

(4) Each partner to a joint venture, or each owner of a facility owned by two or more owners, is jointly and severally liable for any violation of this subpart that occurs at the joint venture facility or a facility that is owned by the joint owners, or a facility that is committed by the joint venture operation or any of the joint owners of the facility.

(b) Any person who violates § 80.1358 is liable for the violation.

§ 80.1361 What penalties apply under the gasoline benzene program?

(a) Any person liable for a violation under § 80.1360 is subject to civil penalties as specified in sections 205 and 211(d) of the Clean Air Act for every day of each such violation and the amount of economic benefit or savings resulting from each violation.

(b) Any person liable under § 80.1358(a) and (b) for a violation of the applicable benzene standards or causing another person to violate the requirements during any averaging period, is subject to a separate day of violation for each and every day in the averaging period. Any person liable under § 80.1360(b) for a failure to fulfill any requirement of credit generation, transfer, use, banking, or deficit carryforward correction is subject to a separate violation for each and every day in the averaging period in which invalid credits are generated, banked, transferred or used.

(c) Any person liable under § 80.1360(b) for failure to meet, or causing a failure to meet, a provision of this subpart is liable for a separate day of violation for each and every day such provision remains unfulfilled.

FOREIGN REFINERS

§ 80.1363 What are the additional requirements under this subpart for gasoline produced at foreign refineries?

(a) *Definitions.*

(1) A *foreign refinery* is a refinery that is located outside the United States, the Commonwealth of Puerto Rico, the Virgin Islands, Guam, American Samoa, and the Commonwealth of the Northern Mariana Islands (collectively referred to in this section as ''the United States'').

(2) A *foreign refiner* is a person that meets the definition of refiner under § 80.2(i) for a foreign refinery.

(3) *Benzene-FRGAS* means gasoline produced at a foreign refinery that has been assigned an individual refinery benzene baseline under § 80.1285, has been approved as a small refiner under § 80.1340, or has been granted temporary relief under § 80.1335, and that is imported into the United States.

(4) *Non-Benzene-FRGA*S means

(i) Gasoline meeting any of the conditions specified in paragraph (a)(3) of this section that is not imported into the United States.

(ii) Gasoline meeting any of the conditions specified in paragraph (a)(3) of this section during a year when the foreign refiner has opted to not participate in the Benzene-FRGAS program under paragraph (c)(3) of this section.

(iii) Gasoline produced at a foreign refinery that has not been assigned an individual refinery benzene baseline under § 80.1285, or that has not been approved as a small refiner under § 80.1340, or that has not been granted temporary relief under § 80.1335.

(5) *Certified Benzene-FRGAS* means Benzene-FRGAS the foreign refiner intends to include in the foreign refinery's benzene compliance calculations under § 80.1240 or credit calculations under § 80.1275 and does include in these calculations when reported to EPA.

(6) *Non-Certified Benzene-FRGAS* means Benzene-FRGAS that is not Certified Benzene-FRGAS.

(b) *Baseline for Early Credits.* For any foreign refiner to obtain approval under the benzene foreign refiner program of this subpart for any refinery in order to generate early credits under § 80.1275, it must apply for approval under the applicable provisions of this subpart.

(1) The refiner shall follow the procedures specified in §§ 80.1280 and 80.1285 to establish a baseline of the volume of gasoline that was produced at the refinery and imported into the United States during the applicable years.

(2) In making determinations for foreign refinery baselines EPA will consider all information supplied by a foreign refiner, and in addition may rely on any and all appropriate assumptions necessary to make such determinations.

(3) Where a foreign refiner submits a petition that is incomplete or inadequate to establish an accurate baseline, and the refiner fails to correct this deficiency after a request for more information, EPA will not assign an individual refinery baseline.

(c) *General requirements for Benzene-FRGAS foreign refiners.* A foreign refiner of a refinery that is approved under the benzene foreign refiner program of this subpart must designate each batch of gasoline produced at the foreign refinery that is exported to the United States as either Certified Benzene-FRGAS or as Non-Certified Benzene-FRGAS, except as provided in paragraph (c)(3) of this section.

(1) In the case of Certified Benzene-FRGAS, the foreign refiner must meet all requirements that apply to refiners under this subpart.

(2) In the case of Non-Certified Benzene-FRGAS, the foreign refiner shall meet all the following requirements:

(i) The designation requirements in this section;

(ii) The recordkeeping requirements in this section and in § 80.1350;

(iii) The reporting requirements in this section and in §§ 80.1352 and 80.1354;

(iv) The product transfer document requirements in this section;

(v) The prohibitions in this section and in § 80.1358; and

(vi) The independent audit requirements in this section and in § 80.1356.

(3)(i) Any foreign refiner that generates early benzene credits under § 80.1275 shall designate all Benzene-FRGAS as Certified Benzene-FRGAS for any year that such credits are generated.

(ii) Any foreign refiner that has been approved to produce gasoline subject to the benzene foreign refiner program for a foreign refinery under this subpart may elect to classify no gasoline imported into the United States as Benzene-FRGAS provided the foreign refiner notifies EPA of the election no later than November 1 preceding the beginning of the next compliance period.

(iii) An election under paragraph (c)(3)(ii) of this section shall be for a 12 month compliance period and apply to all gasoline that is produced by the foreign refinery that is imported into the United States, and shall remain in effect for each succeeding year unless and until the foreign refiner notifies EPA of the termination of the election. The change in election shall take effect at the beginning of the next annual compliance period.

(d) *Designation, product transfer documents, and foreign refiner certification.* (1) Any foreign refiner of a foreign refinery that has been approved by EPA to produce gasoline subject to the benzene foreign refiner program must designate each batch of Benzene-FRGAS as such at the time the gasoline is produced, unless the refiner has elected to classify no gasoline exported to the United States as Benzene-FRGAS under paragraph (c)(3) of this section.

(2) On each occasion when any person transfers custody or title to any Benzene-FRGAS prior to its being imported into the United States, it must include the following information as part of the product transfer document information:

(i) Designation of the gasoline as Certified Benzene-FRGAS or as Non-Certified Benzene-FRGAS; and

(ii) The name and EPA refinery registration number of the refinery where the Benzene-FRGAS was produced.

(3) On each occasion when Benzene-FRGAS is loaded onto a vessel or other transportation mode for transport to the United States, the foreign refiner shall prepare a certification for each batch of the Benzene-FRGAS that meets the following requirements.

(i) The certification shall include the report of the independent third party under paragraph (f) of this section, and the following additional information:

(A) The name and EPA registration number of the refinery that produced the Benzene-FRGAS;

(B) The identification of the gasoline as Certified Benzene-FRGAS or Non-Certified Benzene-FRGAS;

(C) The volume of Benzene-FRGAS being transported, in gallons;

(D) In the case of Certified Benzene-FRGAS:

(*1*) The benzene content as determined under paragraph (f) of this section, and the applicable designations stated in paragraph (d)(2)(i) of this section; and

(*2*) A declaration that the Benzene-FRGAS is being included in the applicable compliance calculations required by EPA under this subpart.

(ii) The certification shall be made part of the product transfer documents for the Benzene-FRGAS.

(e) *Transfers of Benzene-FRGAS to non-United States markets.* The foreign refiner is responsible to ensure that all gasoline classified as Benzene-FRGAS is imported into the United States. A foreign refiner may remove the Benzene-FRGAS classification, and the gasoline need not be imported into the United States, but only if:

(1) The foreign refiner excludes:

(i) The volume of gasoline from the refinery's compliance report under § 80.1354; and

(ii) In the case of Certified Benzene-FRGAS, the volume of the gasoline from the compliance report under § 80.1354.

(2) The foreign refiner obtains sufficient evidence in the form of documentation that the gasoline was not imported into the United States.

(f) *Load port independent sampling, testing and refinery identification.* (1) On each occasion that Benzene-FRGAS is loaded onto a vessel for transport to the United States a foreign refiner shall have an independent third party:

(i) Inspect the vessel prior to loading and determine the volume of any tank bottoms;

(ii) Determine the volume of Benzene-FRGAS loaded onto the vessel (exclusive of any tank bottoms before loading);

(iii) Obtain the EPA-assigned registration number of the foreign refinery;

(iv) Determine the name and country of registration of the vessel used to transport the Benzene-FRGAS to the United States; and

(v) Determine the date and time the vessel departs the port serving the foreign refinery.

(2) On each occasion that Certified Benzene-FRGAS is loaded onto a vessel for transport to the United States a foreign refiner shall have an independent third party:

(i) Collect a representative sample of the Certified Benzene-FRGAS from each vessel compartment subsequent to loading on the vessel and prior to departure of the vessel from the port serving the foreign refinery;

(ii) Determine the benzene content value for each compartment using the methodology as specified in § 80.46(e) by one of the following:

(A) The third party analyzing each sample; or

(B) The third party observing the foreign refiner analyze the sample;

(iii) Review original documents that reflect movement and storage of the Certified Benzene-FRGAS from the refinery to the load port, and from this review determine:

(A) The refinery at which the Benzene-FRGAS was produced; and

(B) That the Benzene-FRGAS remained segregated from:

(*1*) Non-Benzene-FRGAS and Non-Certified Benzene-FRGAS; and

(*2*) Other Certified Benzene-FRGAS produced at a different refinery.

(3) The independent third party shall submit a report:

(i) To the foreign refiner containing the information required under paragraphs (f)(1) and (f)(2) of this section, to accompany the product transfer documents for the vessel; and

(ii) To the Administrator containing the information required under paragraphs (f)(1) and (f)(2) of this section, within thirty days following the date of the independent third party's inspection. This report shall include a description of the method used to determine the identity of the refinery at which the gasoline was produced, assurance that the gasoline remained segregated as specified in paragraph (n)(1) of this section, and a description of the gasoline's movement and storage between production at the source refinery and vessel loading.

(4) The independent third party must:

(i) Be approved in advance by EPA, based on a demonstration of ability to perform the procedures required in this paragraph (f);

(ii) Be independent under the criteria specified in § 80.65(f)(2)(iii); and

(iii) Sign a commitment that contains the provisions specified in paragraph (i) of this section with regard to activities, facilities and documents relevant to compliance with the requirements of this paragraph (f).

(g) *Comparison of load port and port of entry testing.* (1)(i) Any foreign refiner and any United States importer of Certified Benzene-FRGAS shall compare the results from the load port testing under paragraph (f) of this section, with the port of entry testing as reported under paragraph (o) of this section, for the volume of gasoline and the benzene content value; except as specified in paragraph (g)(1)(ii) of this section.

(ii) Where a vessel transporting Certified Benzene-FRGAS off loads this gasoline at more than one United States port of entry, and the conditions of paragraph (g)(2)(i) of this section are met at the first United States port of entry, the requirements of paragraph (g)(2) of this section do not apply at subsequent ports of entry if the United States importer obtains a certification from the vessel owner that meets the requirements of paragraph (s) of this section, that the vessel has not loaded any gasoline or blendstock between the first United States port of entry and the subsequent port of entry.

(2)(i) The requirements of this paragraph (g)(2) apply if—

(A) The temperature-corrected volumes determined at the port of entry and at the load port differ by more than one percent; or

(B) The benzene content value determined at the port of entry is higher than the benzene content value determined at the load port, and the amount of this difference is greater than the reproducibility amount specified for the port of entry test result by the American Society of Testing and Materials (ASTM) for the test method specified at § 80.46(e).

(ii) The United States importer and the foreign refiner shall treat the gasoline as Non-Certified Benzene-FRGAS, and the foreign refiner shall exclude the gasoline volume from its gasoline volumes calculations and benzene standard designations under this subpart.

(h) *Attest requirements.* Refiners, for each annual compliance period, must arrange to have an attest engagement performed of the underlying documentation that forms the basis of any report required under this subpart. The attest engagement must comply with the procedures and requirements that apply to refiners under §§ 80.125 through 80.130, § 80.1356, and other applicable attest engagement provisions, and must be submitted to the Administrator of EPA for the prior annual compliance period within the time period required under § 80.130. The following additional procedures shall be carried out for any foreign refiner of Benzene-FRGAS.

(1) The inventory reconciliation analysis under § 80.128(b) and the tender analysis under § 80.128(c) shall include Non-Benzene-FRGAS.

(2) Obtain separate listings of all tenders of Certified Benzene-FRGAS and of Non-Certified Benzene-FRGAS, and obtain separate listings of Certified Benzene-FRGAS based on whether it is small refiner gasoline, gasoline produced through the use of credits, or other applicable designation under this subpart. Agree the total volume of tenders from the listings to the gasoline inventory reconciliation analysis in § 80.128(b), and to the volumes determined by the third party under paragraph (f)(1) of this section.

(3) For each tender under paragraph (h)(2) of this section, where the gasoline is loaded onto a marine vessel, report as a finding the name and country of registration of each vessel, and the volumes of Benzene-FRGAS loaded onto each vessel.

(4) Select a sample from the list of vessels identified in paragraph (h)(3) of this section used to transport Certified Benzene-FRGAS, in accordance with the guidelines in § 80.127, and for each vessel selected perform the following:

(i) Obtain the report of the independent third party, under paragraph (f) of this section, and of the United States importer under paragraph (o) of this section.

(A) Agree the information in these reports with regard to vessel identification, gasoline volumes and benzene content test results.

(B) Identify, and report as a finding, each occasion the load port and port of entry benzene content and volume results differ by more than the amounts allowed in paragraph (g) of this section, and determine whether the foreign refiner adjusted its refinery calculations as required in paragraph (g) of this section.

(ii) Obtain the documents used by the independent third party to determine transportation and storage of the Certified Benzene-FRGAS from the refinery to the load port, under paragraph (f) of this section. Obtain tank activity records for any storage tank where the Certified Benzene-FRGAS is stored, and pipeline activity records for any pipeline used to transport the Certified Benzene-FRGAS, prior to being loaded onto the vessel. Use these records to determine whether the Certified Benzene-FRGAS was produced at the refinery that is the subject of the attest engagement, and whether the Certified Benzene-FRGAS was mixed with any Non-Certified Benzene-FRGAS, Non-Benzene-FRGAS, or any Certified Benzene-FRGAS produced at a different refinery.

(5) Select a sample from the list of vessels identified in paragraph (h)(3) of this section used to transport Certified and Non-Certified Benzene-FRGAS, in accordance with the guidelines in § 80.127, and for each vessel selected perform the following:

(i) Obtain a commercial document of general circulation that lists vessel arrivals and departures, and that includes the port and date of departure of the vessel, and the port of entry and date of arrival of the vessel.

(ii) Agree the vessel's departure and arrival locations and dates from the independent third party and United States importer reports to the information contained in the commercial document.

(6) Obtain separate listings of all tenders of Non-Benzene-FRGAS, and perform the following:

(i) Agree the total volume and benzene content of tenders from the listings to the gasoline inventory reconciliation analysis in § 80.128(b).

(ii) Obtain a separate listing of the tenders under this paragraph (h)(6) where the gasoline is loaded onto a marine vessel. Select a sample from this listing in accordance with the guidelines in § 80.127, and obtain a commercial document of general circulation that lists vessel arrivals and departures, and that includes the port and date of departure and the ports and dates where the gasoline was off loaded for the selected vessels. Determine and report as a finding the country where the gasoline was off loaded for each vessel selected.

(7) In order to complete the requirements of this paragraph (h) an auditor shall:

(i) Be independent of the foreign refiner;

(ii) Be licensed as a Certified Public Accountant in the United States and a citizen of the United States, or be approved in advance by EPA based on a demonstration of ability to perform the procedures required in §§ 80.125 through 80.130 and this paragraph (h); and

(iii) Sign a commitment that contains the provisions specified in paragraph (i) of this section with regard to activities and documents relevant to compliance with the requirements of §§ 80.125 through 80.130 and this paragraph (h).

(i) *Foreign refiner commitments.* Any foreign refiner shall commit to and comply with the provisions contained in this paragraph (i) as a condition to being approved as a foreign refiner under this subpart.

(1) Any United States Environmental Protection Agency inspector or auditor must be given full, complete and immediate access to conduct inspections and audits of the foreign refinery.

(i) Inspections and audits may be either announced in advance by EPA, or unannounced.

(ii) Access will be provided to any location where:

(A) Gasoline is produced;

(B) Documents related to refinery operations are kept;

(C) Gasoline or blendstock samples are tested or stored; and

(D) Benzene-FRGAS is stored or transported between the foreign refinery and the United States, including storage tanks, vessels and pipelines.

(iii) Inspections and audits may be by EPA employees or contractors to EPA.

(iv) Any documents requested that are related to matters covered by inspections and audits must be provided to an EPA inspector or auditor on request.

(v) Inspections and audits by EPA may include review and copying of any documents related to:

(A) Refinery baseline establishment, if applicable, including the volume and benzene content of gasoline; transfers of title or custody of any gasoline or blendstocks whether Benzene-FRGAS or Non-Benzene-FRGAS, produced at the foreign refinery during the period January 1, 2004 through December 31, 2005, and any work papers related to refinery baseline establishment;

(B) The volume and benzene content of Benzene-FRGAS;

(C) The proper classification of gasoline as being Benzene-FRGAS or as not being Benzene-FRGAS, or as Certified Benzene-FRGAS or as Non-Certified Benzene-FRGAS, and all other relevant designations under this subpart;

(D) Transfers of title or custody to Benzene-FRGAS;

(E) Sampling and testing of Benzene-FRGAS;

(F) Work performed and reports prepared by independent third parties and by independent auditors under the requirements of this section, including work papers; and

(G) Reports prepared for submission to EPA, and any work papers related to such reports.

(vi) Inspections and audits by EPA may include taking samples of gasoline, gasoline additives or blendstock, and interviewing employees.

(vii) Any employee of the foreign refiner must be made available for interview by the EPA inspector or auditor, on request, within a reasonable time period.

(viii) English language translations of any documents must be provided to an EPA inspector or auditor, on request, within 10 working days.

(ix) English language interpreters must be provided to accompany EPA inspectors and auditors, on request.

(2) An agent for service of process located in the District of Columbia shall be named, and service on this agent constitutes service on the foreign refiner or any employee of the foreign refiner for any action by EPA or otherwise by the United States related to the requirements of this subpart.

(3) The forum for any civil or criminal enforcement action related to the provisions of this section for violations of the Clean Air Act or regulations promulgated thereunder shall be governed by the Clean Air Act, including the EPA administrative forum where allowed under the Clean Air Act.

(4) United States substantive and procedural laws shall apply to any civil or criminal enforcement action against the foreign refiner or any employee of the foreign refiner related to the provisions of this section.

(5) Submitting a petition for participation in the benzene foreign refiner program or producing and exporting gasoline under any such program, and all other actions to comply with the requirements of this subpart relating to participation in any benzene foreign refiner program, or to establish an individual refinery gasoline benzene baseline under this subpart constitute actions or activities covered by and within the meaning of the provisions of 28 U.S.C. 1605(a)(2), but solely with respect to actions instituted against the foreign refiner, its agents and employees in any court or other tribunal in the United States for conduct that violates the requirements applicable to the foreign refiner under this subpart, including conduct that violates the False Statements Accountability Act of 1996 (18 U.S.C. 1001) and section 113(c)(2) of the Clean Air Act (42 U.S.C. 7413).

(6) The foreign refiner, or its agents or employees, will not seek to detain or to impose civil or criminal remedies against EPA inspectors or auditors, whether EPA employees or EPA contractors, for actions performed within the scope of EPA employment related to the provisions of this section.

(7) The commitment required by this paragraph (i) shall be signed by the owner or president of the foreign refiner business.

(8) In any case where Benzene-FRGAS produced at a foreign refinery is stored or transported by another company between the refinery and the vessel that transports the Benzene-FRGAS to the United States, the foreign refiner shall obtain from each such other company a commitment that meets the requirements specified in paragraphs (i)(1) through (7) of this section, and these commitments shall be included in the foreign refiner's petition to participate in any benzene foreign refiner program.

(j) *Sovereign immunity*. By submitting a petition for participation in any benzene foreign refiner program under this subpart (and baseline, if applicable) under this section, or by producing and exporting gasoline to the United States under any such program, the foreign refiner, and its agents and employees, without exception, become subject to the full operation of the administrative and judicial enforcement powers and provisions of the United States without limitation based on sovereign immunity, with respect to actions instituted against the foreign refiner, its agents and employees in any court or other tribunal in the United States for conduct that violates the requirements applicable to the foreign refiner under this subpart, including conduct that violates the False Statements Accountability Act of 1996 (18 U.S.C. 1001) and section 113(c)(2) of the Clean Air Act (42 U.S.C. 7413).

(k) *Bond posting*. Any foreign refiner shall meet the requirements of this paragraph (k) as a condition to approval as benzene foreign refiner under this subpart.

(1) The foreign refiner shall post a bond of the amount calculated using the following equation:

$$\text{Bond} = G \times \$0.01$$

Where:

Bond = amount of the bond in U.S. dollars

G = the largest volume of gasoline produced at the foreign refinery and exported to the United States, in gallons, during a single calendar year among the most recent of the following calendar years, up to a maximum of five calendar years: the calendar year immediately preceding the date the refinery's baseline petition is submitted,

the calendar year the baseline petition is submitted, and each succeeding calendar year.

(2) Bonds shall be posted by:

(i) Paying the amount of the bond to the Treasurer of the United States;

(ii) Obtaining a bond in the proper amount from a third party surety agent that is payable to satisfy United States administrative or judicial judgments against the foreign refiner, provided EPA agrees in advance as to the third party and the nature of the surety agreement; or

(iii) An alternative commitment that results in assets of an appropriate liquidity and value being readily available to the United States, provided EPA agrees in advance as to the alternative commitment.

(3) Bonds posted under this paragraph (k) shall—

(i) Be used to satisfy any judicial judgment that results from an administrative or judicial enforcement action for conduct in violation of this subpart, including where such conduct violates the False Statements Accountability Act of 1996 (18 U.S.C. 1001) and section 113(c)(2) of the Clean Air Act (42 U.S.C. 7413);

(ii) Be provided by a corporate surety that is listed in the United States Department of Treasury Circular 570 ''Companies Holding Certificates of Authority as Acceptable Sureties on Federal Bonds''; and

(iii) Include a commitment that the bond will remain in effect for at least five years following the end of latest annual reporting period that the foreign refiner produces gasoline pursuant to the requirements of this subpart.

(4) On any occasion a foreign refiner bond is used to satisfy any judgment, the foreign refiner shall increase the bond to cover the amount used within 90 days of the date the bond is used.

(5) If the bond amount for a foreign refiner increases, the foreign refiner shall increase the bond to cover the shortfall within 90 days of the date the bond amount changes. If the bond amount decreases, the foreign refiner may reduce the amount of the bond beginning 90 days after the date the bond amount changes.

(l) [Reserved]

(m) *English language reports*. Any report or other document submitted to EPA by a foreign refiner shall be in English language, or shall include an English language translation.

(n) *Prohibitions*. (1) No person may combine Certified Benzene-FRGAS with any Non-Certified Benzene-FRGAS or Non-Benzene-FRGAS, and no person may combine Certified Benzene-FRGAS with any Certified Benzene-FRGAS produced at a different refinery, until the importer has met all the requirements of paragraph (o) of this section, except as provided in paragraph (e) of this section.

(2) No foreign refiner or other person may cause another person to commit an action prohibited in paragraph (n)(1) of this section, or that otherwise violates the requirements of this section.

(o) *United States importer requirements*. Any United States importer shall meet the following requirements:

(1) Each batch of imported gasoline shall be classified by the importer as being Benzene-FRGAS or as Non-Benzene-FRGAS, and each batch classified as Benzene-FRGAS shall be further classified as Certified Benzene-FRGAS or as Non-Certified Benzene-FRGAS.

(2) Gasoline shall be classified as Certified Benzene-FRGAS or as Non-Certified Benzene-FRGAS according to the designation by the foreign refiner if this designation is supported by product transfer documents prepared by the foreign refiner as required in paragraph (d) of this section, unless the gasoline is classified as Non-Certified Benzene-FRGAS under paragraph (g) of this section. Additionally, the importer shall comply with all requirements of this subpart applicable to importers.

(3) For each gasoline batch classified as Benzene-FRGAS, any United States importer shall perform the following procedures.

(i) In the case of both Certified and Non-Certified Benzene-FRGAS, have an independent third party:

(A) Determine the volume of gasoline in the vessel;

(B) Use the foreign refiner's Benzene-FRGAS certification to determine the name and EPA-assigned registration number of the foreign refinery that produced the Benzene-FRGAS;

(C) Determine the name and country of registration of the vessel used to transport the Benzene-FRGAS to the United States; and

(D) Determine the date and time the vessel arrives at the United States port of entry.

(ii) In the case of Certified Benzene-FRGAS, have an independent third party:

(A) Collect a representative sample from each vessel compartment subsequent to the vessel's arrival at the United States port of entry and prior to off loading any gasoline from the vessel;

(B) Obtain the compartment samples; and

(C) Determine the benzene content value of each compartment sample using the methodology specified at § 80.46(e) by the third party analyzing the sample or by the third party observing the importer analyze the sample.

(4) Any importer shall submit reports within 30 days following the date any vessel transporting Benzene-FRGAS arrives at the United States port of entry:

(i) To the Administrator containing the information determined under paragraph (o)(3) of this section; and

(ii) To the foreign refiner containing the information determined under paragraph (o)(3)(ii) of this section, and including identification of the port at which the product was offloaded.

(5) Any United States importer shall meet all other requirements of this subpart for any imported gasoline that is not classified as Certified Benzene-FRGAS under paragraph (o)(2) of this section.

(p) *Truck imports of Certified Benzene-FRGAS produced at a foreign refinery.*

(1) Any refiner whose Certified Benzene-FRGAS is transported into the United States by truck may petition EPA to use alternative procedures to meet the following requirements:

(i) Certification under paragraph (d)(5) of this section;

(ii) Load port and port of entry sampling and testing under paragraphs (f) and (g) of this section;

(iii) Attest under paragraph (h) of this section; and

(iv) Importer testing under paragraph (o)(3) of this section.

(2) These alternative procedures must ensure Certified Benzene-FRGAS remains segregated from Non-Certified Benzene-FRGAS and from Non-Benzene-FRGAS until it is imported into the United States. The petition will be evaluated based on whether it adequately addresses the following:

(i) Provisions for monitoring pipeline shipments, if applicable, from the refinery, that ensure segregation of Certified Benzene-FRGAS from that refinery from all other gasoline;

(ii) Contracts with any terminals and/or pipelines that receive and/or transport Certified Benzene-FRGAS, that prohibit the commingling of Certified Benzene-FRGAS with any of the following:

(A) Other Certified Benzene-FRGAS from other refineries.

(B) All Non-Certified Benzene-FRGAS.

(C) All Non-Benzene-FRGAS;

(iii) Procedures for obtaining and reviewing truck loading records and United States import documents for Certified Benzene-FRGAS to ensure that such gasoline is only loaded into trucks making deliveries to the United States;

(iv) Attest procedures to be conducted annually by an independent third party that review loading records and import documents based on volume reconciliation, or other criteria, to confirm that all Certified Benzene-FRGAS remains segregated throughout the distribution system and is only loaded into trucks for import into the United States.

(3) The petition required by this section must be submitted to EPA along with the application for temporary refiner relief individual refinery benzene standard under this subpart.

(q) *Withdrawal or suspension of foreign refiner status.* EPA may withdraw or suspend a foreign refiner's benzene baseline or standard approval for a foreign refinery where—

(1) A foreign refiner fails to meet any requirement of this section;

(2) A foreign government fails to allow EPA inspections as provided in paragraph (i)(1) of this section;

(3) A foreign refiner asserts a claim of, or a right to claim, sovereign immunity in an action to enforce the requirements in this subpart; or

(4) A foreign refiner fails to pay a civil or criminal penalty that is not satisfied using the foreign refiner bond specified in paragraph (k) of this section.

(r) *Early use of a foreign refiner benzene baseline.*

(1) A foreign refiner may begin using an individual refinery benzene baseline under this subpart before EPA has approved the baseline, provided that:

(i) A baseline petition has been submitted as required in paragraph (b) of this section;

(ii) EPA has made a provisional finding that the baseline petition is complete;

(iii) The foreign refiner has made the commitments required in paragraph (i) of this section;

(iv) The persons that will meet the independent third party and independent attest requirements for the foreign refinery have made the commitments required in paragraphs (f)(3)(iii) and (h)(7)(iii) of this section; and

(v) The foreign refiner has met the bond requirements of paragraph (k) of this section.

(2) In any case where a foreign refiner uses an individual refinery baseline before final approval under paragraph (r)(1) of this section, and the foreign refinery baseline values that ultimately are approved by EPA are more stringent than the early baseline values used by the foreign refiner, the foreign refiner shall recalculate its compliance, *ab initio*, using the baseline values approved by the EPA, and the foreign refiner shall be liable for any resulting violation of the requirements of this subpart.

(s) *Additional requirements for petitions, reports and certificates.* Any petition for approval to produce gasoline subject to the benzene foreign refiner program, any alternative procedures under paragraph (p) of this section, any report or other submission required by paragraph (c), (f)(2), or (i) of this section, and any certification under paragraph (d)(3) of this section shall be—

(1) Submitted in accordance with procedures specified by the Administrator, including use of any forms that may be specified by the Administrator.

(2) Be signed by the president or owner of the foreign refiner company, or by that person's immediate designee, and shall contain the following declaration:

I hereby certify: (1) That I have actual authority to sign on behalf of and to bind [insert name of foreign refiner] with regard to all statements contained herein; (2) that I am aware that the information contained herein is being Certified, or submitted to the United States Environmental Protection Agency, under the requirements of 40 CFR part 80, subpart L, and that the information is material for determining compliance under these regulations; and (3) that I have read and understand the information being Certified or submitted, and this information is true, complete and correct to the best of my knowledge and belief after I have taken reasonable and appropriate steps to verify the accuracy thereof. I affirm that I have read and understand the provisions of 40 CFR part 80, subpart L, including 40 CFR 80.1363 apply to [insert name of foreign refiner]. Pursuant to Clean Air Act section 113(c) and 18 U.S.C. 1001, the penalty for furnishing false, incomplete or misleading information in this certification or submission is a fine of up to $10,000 U.S., and/or imprisonment for up to five years.

Subpart M—Renewable Fuel Standard

SOURCE: 75 FR 14863, Mar. 26, 2010, unless otherwise noted.

§ 80.1400 Applicability.

The provisions of this Subpart M shall apply for all renewable fuel produced on or after July 1, 2010, for all RINs generated on or after July 1, 2010, and for all renewable volume obligations and compliance periods starting with January 1, 2010. Except as provided otherwise in this Subpart M, the provisions of Subpart K of this Part 80 shall not apply for such renewable fuel, RINs, renewable volume obligations, or compliance periods.

§ 80.1401 Definitions.

The definitions of § 80.2 and of this section apply for the purposes of this

Subpart M. The definitions of this section do not apply to other subparts unless otherwise noted. Note that many terms defined here are common terms that have specific meanings under this subpart M. The definitions follow:

Advanced biofuel means renewable fuel, other than ethanol derived from cornstarch, that has lifecycle greenhouse gas emissions that are at least 50 percent less than baseline lifecycle greenhouse gas emissions.

Annual cover crop means an annual crop, planted as a rotation between primary planted crops, or between trees and vines in orchards and vineyards, typically to protect soil from erosion and to improve the soil between periods of regular crops.

Areas at risk of wildfire are those areas in the ''wildland-urban interface'', where humans and their development meet or intermix with wildland fuel. Note that, for guidance, the SILVIS laboratory at the University of Wisconsin maintains a Web site that provides a detailed map of areas meeting this criteria at: *http://www.silvis.forest.wisc.edu/projects/US_WUI_2000.asp*. The SILVIS laboratory is located at 1630 Linden Drive, Madison, Wisconsin 53706 and can be contacted at (608) 263–4349.

Baseline lifecycle greenhouse gas emissions means the average lifecycle greenhouse gas emissions for gasoline or diesel (whichever is being replaced by the renewable fuel) sold or distributed as transportation fuel in 2005.

Biodiesel means a mono-alkyl ester that meets ASTM D 6751 (incorporated by reference, *see* § 80.1468).

Biogas means a mixture of hydrocarbons that is a gas at 60 degrees Fahrenheit and 1 atmosphere of pressure that is produced through the conversion of organic matter. Only biogas that is used as renewable fuel can generate RINs. Biogas includes propane, landfill gas, manure digester gas, and sewage waste treatment gas.

Biomass-based diesel means a renewable fuel that has lifecycle greenhouse gas emissions that are at least 50 percent less than baseline lifecycle greenhouse gas emissions and meets all of the requirements of paragraph (1) of this definition:

(1)(i) Is a transportation fuel, transportation fuel additive, heating oil, or jet fuel.

(ii) Meets the definition of either biodiesel or non-ester renewable diesel.

(iii) Is registered as a motor vehicle fuel or fuel additive under 40 CFR part 79, if the fuel or fuel additive is intended for use in a motor vehicle.

(2) Renewable fuel that is co-processed with petroleum is not biomass-based diesel.

Cellulosic biofuel means renewable fuel derived from any cellulose, hemicellulose, or lignin that has lifecycle greenhouse gas emissions that are at least 60 percent less than the baseline lifecycle greenhouse gas emissions.

Cellulosic diesel is any renewable fuel which meets both the definitions of cellulosic biofuel and biomass-based diesel, as defined in this section 80.1401. Cellulosic diesel includes heating oil and jet fuel made from cellulosic feedstocks.

Combined heat and power (CHP), also known as cogeneration, refers to industrial processes in which waste heat from the production of electricity is used for process energy in the renewable fuel production facility.

Co-processed means that renewable biomass was simultaneously processed with fossil fuels or other non-renewable feedstock in the same unit or units to produce a fuel that is partially derived from renewable biomass.

Corn oil extraction means the recovery of corn oil from the thin stillage and/or the distillers grains and solubles produced by a dry mill corn ethanol plant, most often by mechanical separation.

Corn oil fractionation means a process whereby seeds are divided in various components and oils are removed prior to fermentation for the production of ethanol.

Crop residue is the biomass left over from the harvesting or processing of planted crops from existing agricultural land and any biomass removed from existing agricultural land that facilitates crop management (including biomass removed from such lands in relation to invasive species control or fire management), whether or not the biomass includes any portion of a crop or crop plant.

Cropland is land used for production of crops for harvest and includes cultivated cropland, such as for row crops or close-grown crops, and non-cultivated cropland, such as for horticultural or aquatic crops.

Diesel, for the purposes of this subpart, refers to any and all of the products specified at § 80.1407(e).

Ecologically sensitive forestland means forestland that meets either of the following criteria:

(1) An ecological community with a global or state ranking of critically imperiled, imperiled or rare pursuant to a State Natural Heritage Program. For examples of such ecological communities, see ''Listing of Forest Ecological Communities Pursuant to 40 CFR 80.1401; S1–S3 communities,'' which is number EPA–HQ–OAR–2005–0161–1034.1 in the public docket, and ''Listing of Forest Ecological Communities Pursuant to 40 CFR 80.1401; G1–G2 communities,'' which is number EPA–HQ–OAR–2005–0161–2906.1 in the public docket. This material is available for inspection at the EPA Docket Center, EPA/DC, EPA West, Room 3334, 1301 Constitution Ave., NW., Washington DC. The telephone number for the Air Docket is (202) 566–1742.

(2) Old growth or late successional, characterized by trees at least 200 years in age.

EPA Moderated Transaction System, or EMTS, means a closed, EPA moderated system that provides a mechanism for screening and tracking Renewable Identification Numbers (RINs) as per § 80.1452.

Existing agricultural land is cropland, pastureland, and land enrolled in the Conservation Reserve Program (administered by the U.S. Department of Agriculture's Farm Service Agency) that was cleared or cultivated prior to December 19, 2007, and that, on December 19, 2007, was:

(1) Nonforested; and

(2) Actively managed as agricultural land or fallow, as evidenced by records which must be traceable to the land in question, which must include one of the following:

(i) Records of sales of planted crops, crop residue, or livestock, or records of purchases for land treatments such as fertilizer, weed control, or seeding.

(ii) A written management plan for agricultural purposes.

(iii) Documented participation in an agricultural management program administered by a Federal, state, or local government agency.

(iv) Documented management in accordance with a certification program for agricultural products.

Exporter of renewable fuel means:

(1) A person that transfers any renewable fuel from a location within the contiguous 48 states or Hawaii to a location outside the contiguous 48 states and Hawaii; and

(2) A person that transfers any renewable fuel from a location in the contiguous 48 states or Hawaii to Alaska or a United States territory, unless that state or territory has received an approval from the Administrator to opt-in to the renewable fuel program pursuant to § 80.1443.

Facility means all of the activities and equipment associated with the production of renewable fuel starting from the point of delivery of feedstock material to the point of final storage of the end product, which are located on one property, and are under the control of the same person (or persons under common control).

Fallow means cropland, pastureland, or land enrolled in the Conservation Reserve Program (administered by the U.S. Department of Agriculture's Farm Service Agency) that is intentionally left idle to regenerate for future agricultural purposes with no seeding or planting, harvesting, mowing, or treatment during the fallow period.

Foreign ethanol producer means a person from a foreign country or from an area that has not opted into the program requirements of this subpart who produces ethanol for use in transportation fuel, heating oil, or jet fuel but who does not add denaturant to their product as described in paragraph (2) of the definition of renewable fuel in this section.

Forestland is generally undeveloped land covering a minimum area of 1 acre upon which the primary vegetative species are trees, including land that formerly had such tree cover and that will be regenerated and tree plantations. Tree-covered areas in intensive agricultural crop production settings, such

as fruit orchards, or tree-covered areas in urban settings, such as city parks, are not considered forestland.

Fuel for use in an ocean-going vessel means, for this subpart only:

(1) Any marine residual fuel (whether burned in ocean waters, Great Lakes, or other internal waters);

(2) Emission Control Area (ECA) marine fuel, pursuant to §§ 80.2(ttt) and 80.510(k) (whether burned in ocean waters, Great Lakes, or other internal waters); and

(3) Any other fuel intended for use only in ocean-going vessels.

Gasoline, for the purposes of this subpart, refers to any and all of the products specified at § 80.1407(c).

Heating oil has the meaning given in § 80.2(ccc).

Importers. For the purposes of this subpart, an importer of transportation fuel or renewable fuel is any U.S. domestic person who:

(1) Brings transportation fuel or renewable fuel into the 48 contiguous states of the United States or Hawaii, from a foreign country or from an area that has not opted in to the program requirements of this subpart pursuant to § 80.1443; or

(2) Brings transportation fuel or renewable fuel into an area that has opted in to the program requirements of this subpart pursuant to § 80.1443 from a foreign country or from an area that has not opted in to the program requirements of this subpart.

Membrane separation means the process of dehydrating ethanol to fuel grade (> 99.5% purity) using a hydrophilic membrane.

Motor vehicle has the meaning given in Section 216(2) of the Clean Air Act (42 U.S.C. 7550(2)).

Naphtha means a blendstock or fuel blending component falling within the boiling range of gasoline.

Neat renewable fuel is a renewable fuel to which 1% or less of gasoline (as defined in this section) or diesel fuel has been added.

Non-ester renewable diesel, also known as renewable diesel, means renewable fuel which is all of the following:

(1) A fuel which can be used in an engine designed to operate on conventional diesel fuel, or be heating oil or jet fuel.

(2) Not a mono-alkyl ester.

Nonforested land means land that is not forestland.

Nonroad vehicle has the meaning given in Section 216(11) of the Clean Air Act (42 U.S.C. 7550(11)).

Pastureland is land managed for the production of select indigenous or introduced forage plants for livestock grazing or hay production, and to prevent succession to other plant types.

Planted crops are all annual or perennial agricultural crops from existing agricultural land that may be used as feedstocks for renewable fuel, such as grains, oilseeds, sugarcane, switchgrass, prairie grass, duckweed, and other species (but not including algae species or planted trees), providing that they were intentionally applied by humans to the ground, a growth medium, a pond or tank, either by direct application as seed or plant, or through intentional natural seeding or vegetative propagation by mature plants introduced or left undisturbed for that purpose.

Planted trees are trees harvested from a tree plantation.

Pre-commercial thinnings are trees, including unhealthy or diseased trees, removed to reduce stocking to concentrate growth on more desirable, healthy trees, or other vegetative material that is removed to promote tree growth.

Raw starch hydrolysis means the process of hydrolyzing corn starch into simple sugars at low temperatures, generally not exceeding 100 °F (38 °C), using enzymes designed to be effective under these conditions.

Renewable biomass means each of the following (including any incidental, de minimis contaminants that are impractical to remove and are related to customary feedstock production and transport):

(1) Planted crops and crop residue harvested from existing agricultural land cleared or cultivated prior to December 19, 2007 and that was nonforested and either actively managed or fallow on December 19, 2007.

(2) Planted trees and tree residue from a tree plantation located on nonfederal land (including land belonging to an Indian tribe or an Indian individual that is held in trust by the U.S.

or subject to a restriction against alienation imposed by the U.S.) that was cleared at any time prior to December 19, 2007 and actively managed on December 19, 2007.

(3) Animal waste material and animal byproducts.

(4) Slash and pre-commercial thinnings from non-federal forestland (including forestland belonging to an Indian tribe or an Indian individual, that are held in trust by the United States or subject to a restriction against alienation imposed by the United States) that is not ecologically sensitive forestland.

(5) Biomass (organic matter that is available on a renewable or recurring basis) obtained from the immediate vicinity of buildings and other areas regularly occupied by people, or of public infrastructure, in an area at risk of wildfire.

(6) Algae.

(7) Separated yard waste or food waste, including recycled cooking and trap grease, and materials described in § 80.1426(f)(5)(i).

Renewable electricity means electricity that meets the definition of renewable fuel.

Renewable fuel means a fuel which meets all of the requirements of paragraph (1) of this definition:

(1)(i) Fuel that is produced from renewable biomass.

(ii) Fuel that is used to replace or reduce the quantity of fossil fuel present in a transportation fuel, heating oil, or jet fuel.

(iii) Has lifecycle greenhouse gas emissions that are at least 20 percent less than baseline lifecycle greenhouse gas emissions, unless the fuel is exempt from this requirement pursuant to § 80.1403.

(2) Ethanol covered by this definition shall be denatured as required and defined in 27 CFR parts 19 through 21. Any volume of denaturant added to the undenatured ethanol by a producer or importer in excess of 2 volume percent shall not be included in the volume of ethanol for purposes of determining compliance with the requirements under this subpart.

Renewable Identification Number (RIN), is a unique number generated to represent a volume of renewable fuel pursuant to §§ 80.1425 and 80.1426.

(1) *Gallon-RIN* is a RIN that represents an individual gallon of renewable fuel used for compliance purposes pursuant to § 80.1427 to satisfy a renewable volume obligation.

(2) *Batch-RIN* is a RIN that represents multiple gallon-RINs.

Slash is the residue, including treetops, branches, and bark, left on the ground after logging or accumulating as a result of a storm, fire, delimbing, or other similar disturbance.

Small refinery, for this subpart only, means a refinery for which the average aggregate daily crude oil throughput for calendar year 2006 (as determined by dividing the aggregate throughput for the calendar year by the number of days in the calendar year) does not exceed 75,000 barrels.

Transportation fuel means fuel for use in motor vehicles, motor vehicle engines, nonroad vehicles, or nonroad engines (except fuel for use in ocean-going vessels).

Tree plantation is a stand of no less than 1 acre composed primarily of trees established by hand- or machine-planting of a seed or sapling, or by coppice growth from the stump or root of a tree that was hand- or machine-planted. Tree plantations must have been cleared prior to December 19, 2007 and must have been actively managed on December 19, 2007, as evidenced by records which must be traceable to the land in question, which must include:

(1) Sales records for planted trees or tree residue together with other written documentation connecting the land in question to these purchases;

(2) Purchasing records for seeds, seedlings, or other nursery stock together with other written documentation connecting the land in question to these purchases;

(3) A written management plan for silvicultural purposes;

(4) Documentation of participation in a silvicultural program sponsored by a Federal, state or local government agency;

(5) Documentation of land management in accordance with an agricultural or silvicultural product certification program;

(6) An agreement for land management consultation with a professional forester that identifies the land in question; or

(7) Evidence of the existence and ongoing maintenance of a road system or other physical infrastructure designed and maintained for logging use, together with one of the above-mentioned documents.

Tree residue is slash and any woody residue generated during the processing of planted trees from tree plantations for use in lumber, paper, furniture or other applications, provided that such woody residue is not mixed with similar residue from trees that do not originate in tree plantations.

[75 FR 14863, Mar. 26, 2010, as amended at 75 FR 26035, May 10, 2010, and 75 FR 37733, June 30, 2010]

§ 80.1402 [Reserved]

§ 80.1403 Which fuels are not subject to the 20% GHG thresholds?

(a) For purposes of this section, the following definitions apply:

(1) *Baseline volume* means the permitted capacity or, if permitted capacity cannot be determined, the actual peak capacity of a specific renewable fuel production facility on a calendar year basis.

(2) *Permitted capacity* means 105% of the maximum permissible volume output of renewable fuel that is allowed under operating conditions specified in the most restrictive of all applicable preconstruction, construction and operating permits issued by regulatory authorities (including local, regional, state or a foreign equivalent of a state, and federal permits, or permits issued by foreign governmental agencies) that govern the construction and/or operation of the renewable fuel facility, reported as:

(i) Annual volume output on a calendar year basis; or

(ii) If the permit specifies maximum rated volume output on an hourly basis, then multiplying the hourly output by 8,322 hours per year to obtain the annual output.

(3) *Actual peak capacity* means 105% of the maximum annual volume of renewable fuels produced from a specific renewable fuel production facility on a calendar year basis.

(i) For facilities that commenced construction prior to December 19, 2007 the actual peak capacity is based on the last five calendar years prior to 2008, unless no such production exists, in which case actual peak capacity is determined pursuant to paragraph (a)(3)(ii) of this section.

(ii) For facilities that commenced construction after December 19, 2007, and are fired with natural gas, biomass, or a combination thereof, the actual peak capacity is based on any calendar year after startup during the first three years of operation.

(4) *Commence construction*, as applied to facilities that produce renewable fuel, means that:

(i) The owner or operator has all necessary preconstruction approvals or permits (as defined at 40 CFR 52.21(b)(10)), and has satisfied either of the following:

(A) Begun, or caused to begin, a continuous program of actual construction on-site (as defined in 40 CFR 52.21(b)(11)).

(B) Entered into binding agreements or contractual obligations, which cannot be cancelled or modified without substantial loss to the owner or operator, to undertake a program of actual construction of the facility.

(ii) For multi-phased projects, the commencement of construction of one phase does not constitute commencement of construction of any later phase, unless each phase is mutually dependent for physical and chemical reasons only.

(b) The lifecycle greenhouse gas emissions from renewable fuels must be at least 20 percent less than baseline lifecycle greenhouse gas emissions, with the exception of the baseline volumes of renewable fuel produced from facilities described in paragraphs (c) and (d) of this section.

(c) The baseline volume of renewable fuel that is produced from facilities and any expansions, all of which commenced construction on or before December 19, 2007, shall not be subject to

the requirement that lifecycle greenhouse gas emissions be at least 20 percent less than baseline lifecycle greenhouse gas emissions if the owner or operator:

(1) Did not discontinue construction for a period of 18 months after commencement of construction; and

(2) Completed construction by December 19, 2010.

(d) The baseline volume of ethanol that is produced from facilities and any expansions all of which commenced construction after December 19, 2007 and on or before December 31, 2009, shall not be subject to the requirement that lifecycle greenhouse gas emissions be at least 20 percent less than baseline lifecycle greenhouse gas emissions if such facilities are fired with natural gas, biomass, or a combination thereof at all times the facility operated between December 19, 2007 and December 31, 2009 and if:

(1) The owner or operator did not discontinue construction for a period of 18 months after commencement of construction;

(2) The owner or operator completed construction within 36 months of commencement of construction; and

(3) The baseline volume continues to be produced through processes fired with natural gas, biomass, or any combination thereof.

(e) The annual volume of renewable fuel during a calendar year from facilities described in paragraphs (c) and (d) of this section that exceeds the baseline volume shall be subject to the requirement that lifecycle greenhouse gas emissions be at least 20 percent less than baseline lifecycle greenhouse gas emissions.

(f) If there are any changes in the mix of renewable fuels produced by those facilities described in paragraph (d) of this section, only the ethanol volume (to the extent it is less than or equal to baseline volume) will not be subject to the requirement that lifecycle greenhouse gas emissions be at least 20 percent less than baseline lifecycle greenhouse gas emissions. Any party that changes the fuel mix must update their registration as specified in § 80.1450(d).

[75 FR 14863, Mar. 26, 2010, as amended at 75 FR 26036, May 10, 2010; 75 FR 37733, June 30, 2010]

§ 80.1404 [Reserved]

§ 80.1405 What are the Renewable Fuel Standards?

(a) *Renewable Fuel Standards for 2010.*

(1) The value of the cellulosic biofuel standard for 2010 shall be 0.004 percent.

(2) The value of the biomass-based diesel standard for 2010 shall be 1.10 percent.

(3) The value of the advanced biofuel standard for 2010 shall be 0.61 percent.

(4) The value of the renewable fuel standard for 2010 shall be 8.25 percent.

(b) Beginning with the 2011 compliance period, EPA will calculate the value of the annual standards and publish these values in the FEDERAL REGISTER by November 30 of the year preceding the compliance period.

(c) EPA will calculate the annual renewable fuel percentage standards using the following equations:

$$\mathrm{Std}_{\mathrm{CB,\,i}} = 100 * \frac{\mathrm{RFV}_{\mathrm{CB,\,i}}}{(G_i - RG_i) + (GS_i - RGS_i) - GE_i + (D_i - RD_i) + (DS_i - RDS_i) - DE_i}$$

$$\mathrm{Std}_{\mathrm{BBD,\,i}} = 100 * \frac{\mathrm{RFV}_{\mathrm{BBD,\,i}} \times 1.5}{(G_i - RG_i) + (GS_i - RGS_i) - GE_i + (D_i - RD_i) + (DS_i - RDS_i) - DE_i}$$

$$\mathrm{Std}_{\mathrm{AB,\,i}} = 100 * \frac{\mathrm{RFV}_{\mathrm{AB,\,i}}}{(G_i - RG_i) + (GS_i - RGS_i) - GE_i + (D_i - RD_i) + (DS_i - RDS_i) - DE_i}$$

$$\mathrm{Std}_{\mathrm{RF,\,i}} = 100 * \frac{\mathrm{RFV}_{\mathrm{RF,\,i}}}{(G_i - RG_i) + (GS_i - RGS_i) - GE_i + (D_i - RD_i) + (DS_i - RDS_i) - DE_i}$$

Where:

$\mathrm{Std}_{\mathrm{CB,i}}$ = The cellulosic biofuel standard for year i, in percent.

$\mathrm{Std}_{\mathrm{BBD,i}}$ = The biomass-based diesel standard for year i, in percent.

$\mathrm{Std}_{\mathrm{AB,i}}$ = The advanced biofuel standard for year i, in percent.

$\mathrm{Std}_{\mathrm{RF,i}}$ = The renewable fuel standard for year i, in percent.

$\mathrm{RFV}_{\mathrm{CB,i}}$ = Annual volume of cellulosic biofuel required by section 211(o)(2)(B) of the Clean Air Act for year i, or volume as adjusted pursuant to section 211(o)(7)(D) of the Clean Air Act, in gallons.

$\mathrm{RFV}_{\mathrm{BBD,i}}$ = Annual volume of biomass-based diesel required by section 211(o)(2)(B) of the Clean Air Act for year i, in gallons.

$\mathrm{RFV}_{\mathrm{AB,i}}$ = Annual volume of advanced biofuel required by section 211(o)(2)(B) of the Clean Air Act for year i, in gallons.

$\mathrm{RFV}_{\mathrm{RF,i}}$ = Annual volume of renewable fuel required by section 211(o)(2)(B) of the Clean Air Act for year i, in gallons.

G_i = Amount of gasoline projected to be used in the 48 contiguous states and Hawaii, in year i, in gallons.

D_i = Amount of diesel projected to be used in the 48 contiguous states and Hawaii, in year i, in gallons.

RG_i = Amount of renewable fuel blended into gasoline that is projected to be consumed in the 48 contiguous states and Hawaii, in year i, in gallons.

RD_i = Amount of renewable fuel blended into diesel that is projected to be consumed in the 48 contiguous states and Hawaii, in year i, in gallons.

GS_i = Amount of gasoline projected to be used in Alaska or a U.S. territory, in year i, if the state or territory has opted-in or opts-in, in gallons.

RGS_i = Amount of renewable fuel blended into gasoline that is projected to be consumed in Alaska or a U.S. territory, in year i, if the state or territory opts-in, in gallons.

DS_i = Amount of diesel projected to be used in Alaska or a U.S. territory, in year i, if the state or territory has opted-in or opts-in, in gallons.

RDS_i = Amount of renewable fuel blended into diesel that is projected to be consumed in Alaska or a U.S. territory, in year i, if the state or territory opts-in, in gallons.

GE_i = The amount of gasoline projected to be produced by exempt small refineries and small refiners, in year i, in gallons in any year they are exempt per §§ 80.1441 and 80.1442, respectively. Assumed to equal $0.119*(G_i\text{-}RG_i)$.

DE_i = The amount of diesel fuel projected to be produced by exempt small refineries and small refiners in year i, in gallons, in any year they are exempt per §§ 80.1441 and 80.1442, respectively. Assumed to equal $0.152*(D_i\text{-}RD_i)$.

(d) The 2010 price for cellulosic biofuel waiver credits is $1.56 per waiver credit.

[75 FR 14863, Mar. 26, 2010, as amended at 75 FR 26036, May 10, 2010, and 75 FR 37733, June 30, 2010]

§ 80.1406 Who is an obligated party under the RFS program?

(a)(1) An *obligated party* is any refiner that produces gasoline or diesel fuel within the 48 contiguous states or Hawaii, or any importer that imports gasoline or diesel fuel into the 48 contiguous states or Hawaii during a compliance period. A party that simply blends renewable fuel into gasoline or diesel fuel, as defined in § 80.1407(c) or (e), is not an obligated party.

(2) If the Administrator approves a petition of Alaska or a United States territory to opt-in to the renewable fuel program under the provisions in § 80.1443, then ''obligated party'' shall also include any refiner that produces gasoline or diesel fuel within that state or territory, or any importer that imports gasoline or diesel fuel into that state or territory.

(b) For each compliance period starting with 2010, an obligated party is required to demonstrate, pursuant to § 80.1427, that it has satisfied the Renewable Volume Obligations for that compliance period, as specified in § 80.1407(a).

(c) *Aggregation of facilities*—(1) Except as provided in paragraphs (c)(2), (d) and (e) of this section, an obligated party may comply with the requirements of paragraph (b) of this section in the aggregate for all of the refineries that it operates, or for each refinery individually.

(2) An obligated party that carries a deficit into year i+1 must use the same approach to aggregation of facilities in year i+1 as it did in year i.

(d) An obligated party must comply with the requirements of paragraph (b) of this section for all of its imported gasoline or diesel fuel in the aggregate.

(e) An obligated party that is both a refiner and importer must comply with the requirements of paragraph (b) of this section for its imported gasoline or diesel fuel separately from gasoline or diesel fuel produced by its domestic refinery or refineries.

(f) Where a refinery or import facility is jointly owned by two or more parties, the requirements of paragraph (b) of this section may be met by one of the joint owners for all of the gasoline or diesel fuel produced/imported at the facility, or each party may meet the requirements of paragraph (b) of this section for the portion of the gasoline or diesel fuel that it produces or imports, as long as all of the gasoline or diesel fuel produced/imported at the facility is accounted for in determining the Renewable Volume Obligations under § 80.1407. In either case, all joint owners are subject to the liability provisions of § 80.1461(d).

(g) The requirements in paragraph (b) of this section apply to the following compliance periods: Beginning in 2010, and every year thereafter, the compliance period is January 1 through December 31.

[75 FR 14863, Mar. 26, 2010, as amended at 75 FR 26037, May 10, 2010]

§ 80.1407 How are the Renewable Volume Obligations calculated?

(a) The Renewable Volume Obligations for an obligated party are determined according to the following formulas:

(1) *Cellulosic biofuel.*

$$RVO_{CB,i} = (RFStd_{CB,i} * (GV_i + DV_i)) + D_{CB,i-1}$$

Where:

$RVO_{CB,i}$ = The Renewable Volume Obligation for cellulosic biofuel for an obligated party for calendar year i, in gallons.

$RFStd_{CB,i}$ = The standard for cellulosic biofuel for calendar year i, determined by EPA pursuant to § 80.1405, in percent.

GV_i = The non-renewable gasoline volume, determined in accordance with paragraphs (b), (c), and (f) of this section, which is produced in or imported into the 48 contiguous states or Hawaii by an obligated party in calendar year i, in gallons.

DV_i = The non-renewable diesel volume, determined in accordance with paragraphs (d), (e), and (f) of this section, produced in or imported into the 48 contiguous states or Hawaii by an obligated party in calendar year i, in gallons.

$D_{CB,i-1}$ = Deficit carryover from the previous year for cellulosic biofuel, in gallons.

(2) *Biomass-based diesel.*

$$RVO_{BBD,i} = (RFStd_{BBD,i} * (GV_i + DV_i)) + D_{BBD,i-1}$$

Where:

$RVO_{BBD,i}$ = The Renewable Volume Obligation for biomass-based diesel for an obligated party for calendar year i, in gallons.

$RFStd_{BBD,i}$ = The standard for biomass-based diesel for calendar year i, determined by EPA pursuant to § 80.1405, in percent.

GV_i = The non-renewable gasoline volume, determined in accordance with paragraphs (b), (c), and (f) of this section, which is produced in or imported into the 48 contiguous states or Hawaii by an obligated party in calendar year i, in gallons.

DV_i = The non-renewable diesel volume, determined in accordance with paragraphs (d), (e), and (f) of this section, produced in or imported into the 48 contiguous states or Hawaii by an obligated party in calendar year i, in gallons.

$D_{BBD,i-1}$ = Deficit carryover from the previous year for biomass-based diesel, in gallons.

(3) *Advanced biofuel.*

$$RVO_{AB,i} = (RFStd_{AB,i} * (GV_i + DV_i)) + D_{AB,i-1}$$

Where:

$RVO_{AB,i}$ = The Renewable Volume Obligation for advanced biofuel for an obligated party for calendar year i, in gallons.

$RFStd_{AB,i}$ = The standard for advanced biofuel for calendar year i, determined by EPA pursuant to § 80.1405, in percent.

GV_i = The non-renewable gasoline volume, determined in accordance with paragraphs (b), (c), and (f) of this section, which is produced in or imported into the 48 contiguous states or Hawaii by an obligated party in calendar year i, in gallons.

DV_i = The non-renewable diesel volume, determined in accordance with paragraphs (d), (e), and (f) of this section, produced in or imported into the 48 contiguous states or Hawaii by an obligated party in calendar year i, in gallons.

$D_{AB,i-1}$ = Deficit carryover from the previous year for advanced biofuel, in gallons.

(4) *Renewable fuel.*

$RVO_{RF,i} = (RFStd_{RF,i} * (GV_i + DV_i)) + D_{RF,i-1}$

Where:

$RVO_{RF,i}$ = The Renewable Volume Obligation for renewable fuel for an obligated party for calendar year i, in gallons.

$RFStd_{RF,i}$ = The standard for renewable fuel for calendar year i, determined by EPA pursuant to § 80.1405, in percent.

GV_i = The non-renewable gasoline volume, determined in accordance with paragraphs (b), (c), and (f) of this section, which is produced in or imported into the 48 contiguous states or Hawaii by an obligated party in calendar year i, in gallons.

DV_i = The non-renewable diesel volume, determined in accordance with paragraphs (d), (e), and (f) of this section, produced in or imported into the 48 contiguous states or Hawaii by an obligated party in calendar year i, in gallons.

$D_{RF,i-1}$ = Deficit carryover from the previous year for renewable fuel, in gallons.

(b) The non-renewable gasoline volume, GV_i, for an obligated party for a given year as specified in paragraph (a) of this section is calculated as follows:

$$GV_i = \sum_{x=1}^{n} G_x - \sum_{y=1}^{m} RBG_y$$

Where:

x = Individual batch of gasoline produced or imported in calendar year i.

n = Total number of batches of gasoline produced or imported in calendar year i.

G_X = Volume of batch x of gasoline produced or imported, as defined in paragraph (c) of this section, in gallons.

y = Individual batch of renewable fuel blended into gasoline in calendar year i.

m = Total number of batches of renewable fuel blended into gasoline in calendar year i.

RBG_y = Volume of batch y of renewable fuel blended into gasoline, in gallons.

(c) Except as specified in paragraph (f) of this section, all of the following products that are produced or imported during a compliance period, collectively called ''gasoline'' for the purposes of this section (unless otherwise specified), are to be included (but not double-counted) in the volume used to calculate a party's Renewable Volume Obligations under paragraph (a) of this section, except as provided in paragraph (f) of this section:

(1) Reformulated gasoline, whether or not renewable fuel is later added to it.

(2) Conventional gasoline, whether or not renewable fuel is later added to it.

(3) Reformulated gasoline blendstock that becomes finished reformulated gasoline upon the addition of oxygenate (RBOB).

(4) Conventional gasoline blendstock that becomes finished conventional gasoline upon the addition of oxygenate (CBOB).

(5) Blendstock (including butane and gasoline treated as blendstock (GTAB)) that has been combined with other blendstock and/or finished gasoline to produce gasoline.

(6) Any gasoline, or any unfinished gasoline that becomes finished gasoline upon the addition of oxygenate, that is produced or imported to comply with a state or local fuels program.

(d) The diesel non-renewable volume, DV_i, for an obligated party for a given year as specified in paragraph (a) of this section is calculated as follows:

$$DV_i = \sum_{x=1}^{n} D_x - \sum_{y=1}^{m} RBD_y$$

Where:

x = Individual batch of diesel produced or imported in calendar year i.

n = Total number of batches of diesel produced or imported in calendar year i.

D_X = Volume of batch x of diesel produced or imported, as defined in paragraph (e) of this section, in gallons.

y = Individual batch of renewable fuel blended into diesel in calendar year i.

m = Total number of batches of renewable fuel blended into diesel in calendar year i.

RBD_y = Volume of batch y of renewable fuel blended into diesel, in gallons.

(e) Except as specified in paragraph (f) of this section, all products meeting the definition of *MVNRLM diesel fuel* at

§ 80.2(qqq) that are produced or imported during a compliance period, collectively called ''diesel fuel'' for the purposes of this section (unless otherwise specified), are to be included (but not double-counted) in the volume used to calculate a party's Renewable Volume Obligations under paragraph (a) of this section.

(f) The following products are not included in the volume of gasoline or diesel fuel produced or imported used to calculate a party's Renewable Volume Obligations according to paragraph (a) of this section:

(1) Any renewable fuel as defined in § 80.1401.

(2) Blendstock that has not been combined with other blendstock, finished gasoline, or diesel to produce gasoline or diesel.

(3) Gasoline or diesel fuel produced or imported for use in Alaska, the Commonwealth of Puerto Rico, the U.S. Virgin Islands, Guam, American Samoa, and the Commonwealth of the Northern Marianas, unless the area has opted into the RFS program under § 80.1443.

(4) Gasoline or diesel fuel produced by a small refinery that has an exemption under § 80.1441 or an approved small refiner that has an exemption under § 80.1442.

(5) Gasoline or diesel fuel exported for use outside the 48 United States and Hawaii, and gasoline or diesel fuel exported for use outside Alaska, the Commonwealth of Puerto Rico, the U.S. Virgin Islands, Guam, American Samoa, and the Commonwealth of the Northern Marianas, if the area has opted into the RFS program under § 80.1443.

(6) For blenders, the volume of finished gasoline, finished diesel fuel, RBOB, or CBOB to which a blender adds blendstocks.

(7) The gasoline or diesel fuel portion of transmix produced by a transmix processor, or the transmix blended into gasoline or diesel fuel by a transmix blender, under § 80.84.

(8) Any gasoline or diesel fuel that is not transportation fuel.

§§ 80.1408–80.1414 [Reserved]

§ 80.1415 How are equivalence values assigned to renewable fuel?

(a)(1) Each gallon of a renewable fuel, or gallon equivalent pursuant to paragraph (b)(5) or (b)(6) of this section, shall be assigned an equivalence value by the producer or importer pursuant to paragraph (b) or (c) of this section.

(2) The equivalence value is a number that is used to determine how many gallon-RINs can be generated for a gallon of renewable fuel according to § 80.1426.

(b) Equivalence values shall be assigned for certain renewable fuels as follows:

(1) Ethanol which is denatured shall have an equivalence value of 1.0.

(2) Biodiesel (mono-alkyl ester) shall have an equivalence value of 1.5.

(3) Butanol shall have an equivalence value of 1.3.

(4) Non-ester renewable diesel with a lower heating value of at least 123,500 Btu/gal shall have an equivalence value of 1.7.

(5) 77,000 Btu (lower heating value) of biogas shall represent one gallon of renewable fuel with an equivalence value of 1.0.

(6) 22.6 kW-hr of electricity shall represent one gallon of renewable fuel with an equivalence value of 1.0.

(7) For all other renewable fuels, a producer or importer shall submit an application to the Agency for an equivalence value following the provisions of paragraph (c) of this section. A producer or importer may also submit an application for an alternative equivalence value pursuant to paragraph (c) if the renewable fuel is listed in this paragraph (b), but the producer or importer has reason to believe that a different equivalence value than that listed in this paragraph (b) is warranted.

(c) *Calculation of new equivalence values.*

(1) The equivalence value for renewable fuels described in paragraph (b)(7) of this section shall be calculated using the following formula:

$$EV = (R/0.972) * (EC/77,000)$$

Where:

EV = Equivalence Value for the renewable fuel, rounded to the nearest tenth.
R = Renewable content of the renewable fuel. This is a measure of the portion of a renewable fuel that came from renewable biomass, expressed as a fraction, on an energy basis.
EC = Energy content of the renewable fuel, in Btu per gallon (lower heating value).

(2) The application for an equivalence value shall include a technical justification that includes a description of the renewable fuel, feedstock(s) used to make it, and the production process.

(3) The Agency will review the technical justification and assign an appropriate equivalence value to the renewable fuel based on the procedure in this paragraph (c).

(4) Applications for equivalence values must be sent to one of the following addresses:

(i) *For U.S. Mail:* U.S. EPA, Attn: RFS2 Program Equivalence Value Application, 6406J, 1200 Pennsylvania Avenue, NW., Washington, DC 20460.

(ii) *For overnight or courier services:* U.S. EPA, Attn: RFS2 Program Equivalence Value Application, 6406J, 1310 L Street, NW., 6th floor, Washington, DC 20005. (202) 343–9038.

(5) All applications required under this section shall be submitted on forms and following procedures prescribed by the Administrator.

[75 FR 14863, Mar. 26, 2010, as amended at 75 FR 26037, May 10, 2010]

§ 80.1416 Petition process for evaluation of new renewable fuels pathways.

(a) Pursuant to this section, a party may petition EPA to assign a D code for their renewable fuel if any of the following apply:

(1) The renewable fuel pathway has not been evaluated by EPA to determine if it qualifies for a D code pursuant to § 80.1426(f).

(2) The renewable fuel pathway has been determined by EPA not to qualify for a D code pursuant to § 80.1426(f) and the party can document significant differences between their fuel production processes and the fuel production processes already considered by EPA.

(3) The renewable fuel pathway has been determined to qualify for a certain D code pursuant to § 80.1426(f) and the party can document significant differences between their fuel production processes and the fuel production processes already considered by EPA that may qualify their fuel pathway for a different D code.

(b)(1) Any petition under paragraph (a) of this section shall include all the following:

(i) The information specified under § 80.76.

(ii) A technical justification that includes a description of the renewable fuel, feedstock(s) used to make it, and the production process. The justification must include process modeling flow charts.

(iii) A mass balance for the pathway, including feedstocks, fuels produced, co-products, and waste materials production.

(iv) Information on co-products, including their expected use and market value.

(v) An energy balance for the pathway, including a list of any energy and process heat inputs and outputs used in the pathway, including such sources produced off site or by another entity.

(vi) Any other relevant information, including information pertaining to energy saving technologies or other process improvements.

(vii) The Administrator may ask for additional information to complete the lifecycle greenhouse gas assessment of the new fuel or pathway.

(2) For those companies who use a feedstock not previously evaluated by EPA under this subpart, the petition must include all the following in addition to the requirements in paragraph (b)(1) of this section:

(i) Type of feedstock and description of how it meets the definition of renewable biomass.

(ii) Market value of the feedstock.

(iii) List of other uses for the feedstock.

(iv) List of chemical inputs needed to produce the renewable biomass source of the feedstock and prepare the renewable biomass for processing into feedstock.

(v) Identify energy needed to obtain the feedstock and deliver it to the facility. If applicable, identify energy needed to plant and harvest the renewable biomass source of the feedstock

and modify the source to create the feedstock.

(vi) Current and projected quantities of the feedstock that will be used to produce the fuel, including information on current and projected yields for feedstocks that are harvested or collected.

(vii) The Administrator may ask for additional information to complete the lifecycle Greenhouse Gas assessment of the new fuel or pathway.

(c)(1) A company may only submit one petition per pathway. If EPA determines the petition to be incomplete, then the company may resubmit.

(2) The petition must be signed and certified as meeting all the applicable requirements of this subpart by the responsible corporate officer of the applicant company.

(3) If EPA determines that the petition is incomplete then EPA will notify the applicant in writing that the petition is incomplete and will not be reviewed further. However, an amended petition that corrects the omission may be re-submitted for EPA review.

(4) If the fuel or pathway described in the petition does not meet the definitions in § 80.1401 of renewable fuel, advanced biofuel, cellulosic biofuel, or biomass-based diesel, then EPA will notify the applicant in writing that the petition is denied and will not be reviewed further.

(d) A D code must be approved prior to the generation of RINs for the fuel in question.

(e) The petition under this section shall be submitted on forms and following procedures as prescribed by EPA.

[75 FR 26037, May 10, 2010]

§§ 80.1417–80.1424 [Reserved]

§ 80.1425 Renewable Identification Numbers (RINs).

Each RIN is a 38-character numeric code of the following form:

KYYYYCCCCFFFFFBBBBBRR DSSSSSSSSEEEEEEEE

(a) K is a number identifying the type of RIN as follows:

(1) K has the value of 1 when the RIN is assigned to a volume of renewable fuel pursuant to § 80.1426(e) and § 80.1428(a).

(2) K has the value of 2 when the RIN has been separated from a volume of renewable fuel pursuant to § 80.1429.

(b) YYYY is the calendar year in which the RIN was generated.

(c) CCCC is the registration number assigned, according to § 80.1450, to the producer or importer of the batch of renewable fuel.

(d) FFFFF is the registration number assigned, according to § 80.1450, to the facility at which the batch of renewable fuel was produced or imported.

(e) BBBBB is a serial number assigned to the batch which is chosen by the producer or importer of the batch such that no two batches have the same value in a given calendar year.

(f) RR is a number representing 10 times the equivalence value of the renewable fuel as specified in § 80.1415.

(g) D is a number determined according to § 80.1426(f) and identifying the type of renewable fuel, as follows:

(1) D has the value of 3 to denote fuel categorized as cellulosic biofuel.

(2) D has the value of 4 to denote fuel categorized as biomass-based diesel.

(3) D has the value of 5 to denote fuel categorized as advanced biofuel.

(4) D has the value of 6 to denote fuel categorized as renewable fuel.

(5) D has the value of 7 to denote fuel categorized as cellulosic diesel.

(h) SSSSSSSS is a number representing the first gallon-RIN associated with a batch of renewable fuel.

(i) EEEEEEEE is a number representing the last gallon-RIN associated with a batch of renewable fuel. EEEEEEEE will be identical to SSSSSSSS if the batch-RIN represents a single gallon-RIN. Assign the value of EEEEEEEE as described in § 80.1426.

§ 80.1426 How are RINs generated and assigned to batches of renewable fuel by renewable fuel producers or importers?

(a) *General requirements.*

(1) To the extent permitted under paragraphs (b) and (c) of this section, producers and importers of renewable fuel must generate RINs to represent that fuel if the fuel:

(i) Qualifies for a D code pursuant to § 80.1426(f), or EPA has approved a petition for use of a D code pursuant to § 80.1416; and

(ii) Is demonstrated to be produced from renewable biomass pursuant to the reporting requirements of § 80.1451 and the recordkeeping requirements of § 80.1454.

(A) Feedstocks meeting the requirements of renewable biomass through the aggregate compliance provision at § 80.1454(g) are deemed to be renewable biomass.

(B) [Reserved]

(2) To generate RINs for imported renewable fuel, including any renewable fuel contained in imported transportation fuel, heating oil, or jet fuel, importers must obtain information from a foreign producer that is registered pursuant to § 80.1450 sufficient to make the appropriate determination regarding the applicable D code and compliance with the renewable biomass definition for each imported batch for which RINs are generated.

(3) A party generating a RIN shall specify the appropriate numerical values for each component of the RIN in accordance with the provisions of § 80.1425(a) and paragraph (f) of this section.

(b) *Regional applicability*. (1) Except as provided in paragraph (c) of this section, a RIN must be generated by a renewable fuel producer or importer for a batch of renewable fuel that satisfies the requirements of paragraph (a)(1) of this section if it is produced or imported for use as transportation fuel, heating oil, or jet fuel in the 48 contiguous states or Hawaii.

(2) If the Administrator approves a petition of Alaska or a United States territory to opt-in to the renewable fuel program under the provisions in § 80.1443, then the requirements of paragraph (b)(1) of this section shall also apply to renewable fuel produced or imported for use as transportation fuel, heating oil, or jet fuel in that state or territory beginning in the next calendar year.

(c) *Cases in which RINs are not generated*. (1) Fuel producers and importers may not generate RINs for fuel that is not designated or intended for use as transportation fuel, heating oil, or jet fuel.

(2) *Small producer/importer threshold*. Pursuant to § 80.1455(a) and (b), renewable fuel producers that produce less than 10,000 gallons a year of renewable fuel, and importers that import less than 10,000 gallons a year of renewable fuel, are not required to generate and assign RINs to batches of renewable fuel that satisfy the requirements of paragraph (a)(1) of this section that they produce or import.

(3) *Temporary new producer threshold*. Pursuant to § 80.1455(c) and (d), new renewable fuel producers that produce less than 125,000 gallons of renewable fuel a year are not required to generate and assign RINs to batches of renewable fuel to satisfy the requirements of paragraph (a)(1) of this section.

(i) The provisions of this paragraph (c)(3) apply only to new facilities, for a maximum of three years beginning with the calendar year in which the production facility produces its first gallon of renewable fuel.

(ii) [RESERVED]

(4) Importers shall not generate RINs for renewable fuel imported from a foreign renewable fuel producer, or for renewable fuel made with ethanol produced by a foreign ethanol producer, unless the foreign renewable fuel producer or foreign ethanol producer is registered with EPA as required in § 80.1450.

(5) Importers shall not generate RINs for renewable fuel that has already been assigned RINs by a registered foreign producer.

(6) A party is prohibited from generating RINs for a volume of fuel that it produces if:

(i) The fuel does not meet the requirements of paragraph (a)(1) of this section; or

(ii) The fuel has been produced from a chemical conversion process that uses another renewable fuel as a feedstock, the renewable fuel used as a feedstock was produced by another party, and RINs were received with the renewable fuel.

(A) Parties who produce renewable fuel made from a feedstock which itself was a renewable fuel received with RINs, shall assign the original RINs to the new renewable fuel.

(B) [Reserved]

(d)(1) *Definition of batch.* For the purposes of this section and § 80.1425, a ''batch of renewable fuel'' is a volume of renewable fuel that has been assigned a unique identifier within a calendar year by the producer or importer of the renewable fuel in accordance with the provisions of this section and § 80.1425.

(i) The number of gallon-RINs generated for a batch of renewable fuel may not exceed 99,999,999.

(ii) A batch of renewable fuel cannot represent renewable fuel produced or imported in excess of one calendar month.

(2) Multiple gallon-RINs generated to represent a given volume of renewable fuel can be represented by a single batch-RIN through the appropriate designation of the RIN volume codes SSSSSSSS and EEEEEEEE.

(i) The value of SSSSSSSS in the batch-RIN shall be 00000001 to represent the first gallon-RIN associated with the volume of renewable fuel.

(ii) The value of EEEEEEEE in the batch-RIN shall represent the last gallon-RIN associated with the volume of renewable fuel, based on the RIN volume V_{RIN} determined pursuant to paragraph (f) of this section.

(iii) Under § 80.1452, RIN volumes will be managed by EMTS. RIN codes SSSSSSSS and EEEEEEEE do not have a role in EMTS.

(e) *Assignment of RINs to batches.*

(1) The producer or importer of renewable fuel must assign all RINs generated to volumes of renewable fuel.

(2) A RIN is assigned to a volume of renewable fuel when ownership of the RIN is transferred along with the transfer of ownership of the volume of renewable fuel, pursuant to § 80.1428(a).

(3) All assigned RINs shall have a K code value of 1.

(f) *Generation of RINs*—(1) *Applicable pathways.* D codes shall be used in RINs generated by producers or importers of renewable fuel according to the pathways listed in Table 1 to this section, or as approved by the Administrator. In choosing an appropriate D code, producers and importers may disregard any incidental, de minimis feedstock contaminants that are impractical to remove and are related to customary feedstock production and transport.

TABLE 1 TO § 80.1426—APPLICABLE D CODES FOR EACH FUEL PATHWAY FOR USE IN GENERATING RINS

Fuel type	Feedstock	Production process requirements	D–code
Ethanol	Corn starch	All of the following: Dry mill process, using natural gas, biomass, or biogas for process energy and at least two advanced technologies from Table 2 to this section.	6
Ethanol	Corn starch	All of the following: Dry mill process, using natural gas, biomass, or biogas for process energy and at least one of the advanced technologies from Table 2 to this section plus drying no more than 65% of the distillers grains with solubles it markets annually.	6
Ethanol	Corn starch	All of the following: Dry mill process, using natural gas, biomass, or biogas for process energy and drying no more than 50% of the distillers grains with solubles it markets annually.	6
Ethanol	Corn starch	Wet mill process using biomass or biogas for process energy..	6
Ethanol	Starches from crop residue and annual covercrops.	Fermentation using natural gas, biomass, or biogas for process energy.	6
Biodiesel, and renewable diesel.	Soy bean oil; Oil from annual covercrops; Algal oil; Biogenic waste oils/fats/greases; Non-food grade corn oil.	One of the following: Trans-Esterification Hydrotreating Excluding processes that co-process renewable biomass andpetroleum.	4
Biodiesel, and renewable diesel.	Soy bean oil; Oil from annual covercrops; Algal oil; Biogenic waste oils/fats/greases; Non-food grade corn oil.	One of the following: Trans-Esterification. Hydrotreating Includes only processes that co-process renewable biomass and petroleum.	5

TABLE 1 TO § 80.1426—APPLICABLE D CODES FOR EACH FUEL PATHWAY FOR USE IN GENERATING RINS—Continued

Fuel type	Feedstock	Production process requirements	D–code
Ethanol	Sugarcane	Fermentation	5
Ethanol	Cellulosic Biomass from crop residue, slash, pre-commercial thinnings and tree residue, annual covercrops, switchgrass, and miscanthus; cellulosic components of separated yard waste; cellulosic components of separated food waste; and cellulosic components of separated MSW.	Any	3
Cellulosic Diesel, Jet Fuel and Heating Oil.	Cellulosic Biomass from crop residue, slash, pre-commercial thinnings and tree residue, annual covercrops, switchgrass, and miscanthus; cellulosic components of separated yard waste; cellulosic components of separated food waste; and cellulosic components of separated MSW.	Any	7
Butanol	Corn starch	Fermentation; dry mill using natural gas, biomass, or biogas for process energy.	6
Cellulosic Naphtha	Cellulosic Biomass from crop residue, slash, pre-commercial thinnings and tree residue, annual covercrops, switchgrass, and miscanthus; cellulosic components of separated yard waste; cellulosic components of separated food waste; and cellulosic components of separated MSW.	Fischer-Tropsch process	3
Ethanol, renewable diesel, jet fuel, heating oil, and naphtha.	The non-cellulosic portions of separated food waste.	Any	5
Biogas	Landfills, sewage waste treatment plants, manure digesters.	Any	5

TABLE 2 TO § 80.1426—ADVANCED TECHNOLOGIES

Corn oil fractionation.
Corn oil extraction.
Membrane separation.
Raw starch hydrolysis.
Combined heat and power.

(2) *Renewable fuel that can be described by a single pathway*.

(i) The number of gallon-RINs that shall be generated for a batch of renewable fuel by a producer or importer for renewable fuel that can be described by a single pathway shall be equal to a volume calculated according to the following formula:

$$V_{RIN} = EV * V_s$$

Where:

V_{RIN} = RIN volume, in gallons, for use in determining the number of gallon-RINs that shall be generated for the batch.

EV = Equivalence value for the batch of renewable fuel per § 80.1415.

V_s = Standardized volume of the batch of renewable fuel at 60 °F, in gallons, calculated in accordance with paragraph (f)(8) of this section.

(ii) The D code that shall be used in the RINs generated shall be the D code specified in Table 1 to this section, or a D code as approved by the Administrator, which corresponds to the pathway that describes the producer's operations.

(3) *Renewable fuel that can be described by two or more pathways.*

(i) The D codes that shall be used in the RINs generated by a producer or importer whose renewable fuel can be described by two or more pathways shall be the D codes specified in Table 1 to this section, or D codes as approved by the Administrator, which correspond to the pathways that describe the renewable fuel throughout that calendar year.

(ii) If all the pathways describing the producer's operations have the same D code and each batch is of a single fuel type, then that D code shall be used in all the RINs generated and the number of gallon-RINs that shall be generated for a batch of renewable fuel shall be equal to a volume calculated according to the following formula:

$$V_{RIN} = EV * V_s$$

Where:

V_{RIN} = RIN volume, in gallons, for use in determining the number of gallon-RINs that shall be generated for the batch.

EV = Equivalence value for the batch of renewable fuel per § 80.1415.

V_s = Standardized volume of the batch of renewable fuel at 60 °F, in gallons, calculated in accordance with paragraph (f)(8) of this section.

(iii) If all the pathways describing the producer's operations have the same D code but individual batches are comprised of a mixture of fuel types with different equivalence values, then that D code shall be used in all the RINs generated and the number of gallon-RINs that shall be generated for a batch of renewable fuel shall be equal to a volume calculated according to the following formula:

$$V_{RIN} = \Sigma(EV_i * V_{s,i})$$

Where:

V_{RIN} = RIN volume, in gallons, for use in determining the number of gallon-RINs that shall be generated for the batch.

EV_i = Equivalence value for fuel type i in the batch of renewable fuel per § 80.1415.

$V_{s,i}$ = Standardized volume of fuel type i in the batch of renewable fuel at 60 °F, in gallons, calculated in accordance with paragraph (f)(8) of this section.

(iv) If the pathway applicable to a producer changes on a specific date, such that one pathway applies before the date and another pathway applies on and after the date, and each batch is of a single fuel type, then the applicable D code and batch identifier used in generating RINs must change on the date that the change in pathway occurs and the number of gallon-RINs that shall be generated for a batch of renewable fuel shall be equal to a volume calculated according to the following formula:

$$V_{RIN} = EV * V_s$$

Where:

V_{RIN} = RIN volume, in gallons, for use in determining the number of gallon-RINs that shall be generated for a batch with a single applicable D code.

EV = Equivalence value for the batch of renewable fuel per § 80.1415.

V_s = Standardized volume of the batch of renewable fuel at 60 °F, in gallons, calculated in accordance with paragraph (f)(8) of this section.

(v) If a producer produces batches that are comprised of a mixture of fuel types with different equivalence values and different applicable D codes, then separate values for V_{RIN} shall be calculated for each category of renewable fuel according to formulas in Table 3 to this section. All batch-RINs thus generated shall be assigned to unique batch identifiers for each portion of the batch with a different D code.

TABLE 3 TO § 80.1426—NUMBER OF GALLON-RINS TO ASSIGN TO BATCH-RINS WITH D CODES DEPENDENT ON FUEL TYPE

D code to use in batch-RIN	Number of gallon-RINs
D = 3	$V_{RIN,\ CB} = EV_{CB} * V_{s,\ CB}$
D = 4	$V_{RIN,\ BBD} = EV_{BBD} * V_{s,\ BBD}$
D = 5	$V_{RIN,\ AB} = EV_{AB} * V_{s,\ AB}$
D = 6	$V_{RIN,\ RF} = EV_{RF} * V_{s,\ RF}$
D = 7	$V_{RIN,\ CD} = EV_{CD} * V_{s,\ CD}$

Where:

$V_{RIN,CB}$ = RIN volume, in gallons, for use in determining the number of gallon-RINs that shall be generated for the cellulosic biofuel portion of the batch with a D code of 3.

$V_{RIN,BBD}$ = RIN volume, in gallons, for use in determining the number of gallon-RINs that shall be generated for the biomass-based diesel portion of the batch with a D code of 4.

$V_{RIN,AB}$ = RIN volume, in gallons, for use in determining the number of gallon-RINs that shall be generated for the advanced biofuel portion of the batch with a D code of 5.

$V_{RIN,RF}$ = RIN volume, in gallons, for use in determining the number of gallon-RINs that shall be generated for the renewable fuel portion of the batch with a D code of 6.

$V_{RIN,CD}$ = RIN volume, in gallons, for use in determining the number of gallon-RINs that shall be generated for the cellulosic diesel portion of the batch with a D code of 7.

EV_{CB} = Equivalence value for the cellulosic biofuel portion of the batch per § 80.1415.

EV_{BBD} = Equivalence value for the biomass-based diesel portion of the batch per § 80.1415.

EV_{AB} = Equivalence value for the advanced biofuel portion of the batch per § 80.1415.

EV_{RF} = Equivalence value for the renewable fuel portion of the batch per § 80.1415.

EV_{CD} = Equivalence value for the cellulosic diesel portion of the batch per § 80.1415.

$V_{s,CB}$ = Standardized volume at 60 °F of the portion of the batch that must be assigned a D code of 3, in gallons, calculated in accordance with paragraph (f)(8) of this section.

$V_{s,BBD}$ = Standardized volume at 60 °F of the portion of the batch that must be assigned a D code of 4, in gallons, calculated in accordance with paragraph (f)(8) of this section.

$V_{s,AB}$ = Standardized volume at 60 °F of the portion of the batch that must be assigned a D code of 5, in gallons, calculated in accordance with paragraph (f)(8) of this section.

$V_{s,RF}$ = Standardized volume at 60 °F of the portion of the batch that must be assigned a D code of 6, in gallons, calculated in accordance with paragraph (f)(8) of this section.

$V_{s,CD}$ = Standardized volume at 60 °F of the portion of the batch that must be assigned a D code of 7, in gallons, calculated in accordance with paragraph (f)(8) of this section.

(vi) If a producer produces a single type of renewable fuel using two or more different feedstocks which are processed simultaneously, and each batch is comprised of a single type of fuel, then the number of gallon-RINs that shall be generated for a batch of renewable fuel and assigned a particular D code shall be determined according to the formulas in Table 4 to this section.

Table 4 to §80.1426

Number of gallon-RINs to assign to batch-RINs with D codes dependent on feedstock

D code to use in batch-RIN	Number of gallon-RINs
D = 3	$V_{RIN,CB} = EV * V_s * \left(\frac{FE_3}{FE_3 + FE_4 + FE_5 + FE_6 + FE_7}\right)$
D = 4	$V_{RIN,BBD} = EV * V_s * \left(\frac{FE_4}{FE_3 + FE_4 + FE_5 + FE_6 + FE_7}\right)$
D = 5	$V_{RIN,AB} = EV * V_s * \left(\frac{FE_5}{FE_3 + FE_4 + FE_5 + FE_6 + FE_7}\right)$
D = 6	$V_{RIN,RF} = EV * V_s * \left(\frac{FE_6}{FE_3 + FE_4 + FE_5 + FE_6 + FE_7}\right)$
D = 7	$V_{RIN,CD} = EV * V_s * \left(\frac{FE_7}{FE_3 + FE_4 + FE_5 + FE_6 + FE_7}\right)$

Where:

$V_{RIN,CB}$ = RIN volume, in gallons, for use in determining the number of gallon-RINs that shall be generated for a batch of cellulosic biofuel with a D code of 3.

$V_{RIN,BBD}$ = RIN volume, in gallons, for use in determining the number of gallon-RINs that shall be generated for a batch of biomass-based diesel with a D code of 4.

$V_{RIN,AB}$ = RIN volume, in gallons, for use in determining the number of gallon-RINs that shall be generated for a batch of advanced biofuel with a D code of 5.

$V_{RIN,RF}$ = RIN volume, in gallons, for use in determining the number of gallon-RINs that shall be generated for a batch of renewable fuel with a D code of 6.

$V_{RIN,CD}$ = RIN volume, in gallons, for use in determining the number of gallon-RINs that shall be generated for a batch of cellulosic diesel with a D code of 7.

EV = Equivalence value for the renewable fuel per § 80.1415.

V_s = Standardized volume of the batch of renewable fuel at 60 °F, in gallons, calculated in accordance with paragraph (f)(8) of this section.

FE_3 = Feedstock energy from all feedstocks whose pathways have been assigned a D code of 3 under Table 1 to this section, or a D code of 3 as approved by the Administrator, in Btu.

FE_4 = Feedstock energy from all feedstocks whose pathways have been assigned a D code of 4 under Table 1 to this section, or a D code of 4 as approved by the Administrator, in Btu.

FE_5 = Feedstock energy from all feedstocks whose pathways have been assigned a D code of 5 under Table 1 to this section, or a D code of 5 as approved by the Administrator, in Btu.

FE_6 = Feedstock energy from all feedstocks whose pathways have been assigned a D code of 6 under Table 1 to this section, or a D code of 6 as approved by the Administrator, in Btu.

FE_7 = Feedstock energy from all feedstocks whose pathways have been assigned a D code of 7 under Table 1 to this section, or a D code of 7 as approved by the Administrator, in Btu.

Feedstock energy values, FE, shall be calculated according to the following formula:

$$FE = M * (1 - m) * CF * E$$

Where:

FE = Feedstock energy, in Btu.

M = Mass of feedstock, in pounds, measured on a daily or per-batch basis.

m = Average moisture content of the feedstock, in mass percent.

CF = Converted Fraction in annual average mass percent, representing that portion of the feedstock that is converted into renewable fuel by the producer.

E = Energy content of the components of the feedstock that are converted to renewable fuel, in annual average Btu/lb, determined according to paragraph (f)(7) of this section.

(4) *Renewable fuel that is produced by co-processing renewable biomass and non-renewable feedstocks simultaneously to produce a fuel that is partially renewable.*

(i) The number of gallon-RINs that shall be generated for a batch of partially renewable fuel shall be equal to a volume V_{RIN} calculated according to Method A or Method B.

(A) *Method A.*

(*1*) V_{RIN} shall be calculated according to the following formula:

$$V_{RIN} = EV * V_s * FE_R/(FE_R + FE_{NR})$$

Where:

V_{RIN} = RIN volume, in gallons, for use in determining the number of gallon-RINs that shall be generated for the batch.

EV = Equivalence value for the batch of renewable fuel per § 80.1415.

V_s = Standardized volume of the batch of renewable fuel at 60 °F, in gallons, calculated in accordance with paragraph (f)(8) of this section.

FE_R = Feedstock energy from renewable biomass used to make the transportation fuel, heating oil, or jet fuel, in Btu.

FE_{NR} = Feedstock energy from non-renewable feedstocks used to make the transportation fuel, heating oil, or jet fuel, in Btu.

(*2*) The value of FE for use in paragraph (f)(4)(i)(A)(*1*) of this section shall be calculated from the following formula:

$$FE = M * (1 - m) * CF * E$$

Where:

FE = Feedstock energy, in Btu.

M = Mass of feedstock, in pounds, measured on a daily or per-batch basis.

m = Average moisture content of the feedstock, in mass percent.

CF = Converted Fraction in annual average mass percent, representing that portion of the feedstock that is converted into transportation fuel, heating oil, or jet fuel by the producer.

E = Energy content of the components of the feedstock that are converted to fuel, in annual average Btu/lb, determined according to paragraph (f)(7) of this section.

(B) *Method B.* V_{RIN} shall be calculated according to the following formula:

$$V_{RIN} = EV * V_s * R$$

Where:

V_{RIN} = RIN volume, in gallons, for use in determining the number of gallon-RINs that shall be generated for the batch.

EV = Equivalence value for the batch of renewable fuel per § 80.1415.

V_s = Standardized volume of the batch of renewable fuel at 60 °F, in gallons, calculated in accordance with paragraph (f)(8) of this section.

R = The renewable fraction of the fuel as measured by a carbon-14 dating test method as provided in paragraph (f)(9) of this section.

(ii) The D code that shall be used in the RINs generated to represent partially renewable transportation fuel, heating oil, or jet fuel shall be the D code specified in Table 1 to this section, or a D code as approved by the Administrator, which corresponds to

the pathway that describes a producer's operations. In determining the appropriate pathway, the contribution of non-renewable feedstocks to the production of partially renewable fuel shall be ignored.

(5) *Renewable fuel produced from separated yard and food waste.*

(i) *Separated yard waste and food waste* means, for the purposes of this section, waste that is one of the following:

(A) *Separated yard waste*, which is a feedstock stream consisting of yard waste kept separate since generation from other waste materials. Separated yard waste is deemed to be composed entirely of cellulosic materials.

(B) *Separated food waste*, which is a feedstock stream consisting of food waste kept separate since generation from other waste materials, and which includes food and beverage production waste and post-consumer food and beverage waste. Separated food waste is deemed to be composed entirely of non-cellulosic materials, unless a party demonstrates that a portion of the feedstock is cellulosic through approval of their facility registration.

(C) *Separated municipal solid waste (separated MSW)*, which is material remaining after separation actions have been taken to remove recyclable paper, cardboard, plastics, rubber, textiles, metals, and glass from municipal solid waste, and which is composed of both cellulosic and non-cellulosic materials.

(ii)(A) A feedstock qualifies under paragraph (f)(5)(i)(A) or (f)(5)(i)(B) of this section only if it is collected according to a plan submitted to and approved by U.S. EPA under the registration procedures specified in § 80.1450(b)(1)(vii).

(B) A feedstock qualifies under paragraph (f)(5)(i)(C) of this section only if it is collected according to a plan submitted to and approved by U.S. EPA under the registration procedures specified in § 80.1450(b)(1)(viii).

(iii) Separation and recycling actions specified in paragraph (f)(5)(i)(C) of this section are considered to occur if:

(A) Recyclable paper, cardboard, plastics, rubber, textiles, metals, and glass that can be recycled are separated and removed from the municipal solid waste stream to the extent reasonably practicable according to a plan submitted to and approved by U.S. EPA under the registration procedures specified in § 80.1450(b)(1)(viii); and

(B) The fuel producer has evidence of all contracts relating to the disposition of paper, cardboard, plastics, rubber, textiles, metals, and glass that are recycled.

(iv)(A) The number of gallon-RINs that shall be generated for a batch of renewable fuel derived from separated yard waste as defined in paragraph (f)(5)(i)(A) of this section shall be equal to a volume V_{RIN} and is calculated according to the following formula:

$$V_{RIN} = EV * V_s$$

Where:

V_{RIN} = RIN volume, in gallons, for use in determining the number of cellulosic biofuel gallon-RINs that shall be generated for the batch.

EV = Equivalence value for the batch of renewable fuel per § 80.1415.

V_s = Standardized volume of the batch of renewable fuel at 60 °F, in gallons, calculated in accordance with paragraph (f)(8) of this section.

(B) The number of gallon-RINs that shall be generated for a batch of renewable fuel derived from separated food waste as defined in paragraph (f)(5)(i)(B) of this section shall be equal to a volume V_{RIN} and is calculated according to the following formula:

$$V_{RIN} = EV * V_s$$

Where:

V_{RIN} = RIN volume, in gallons, for use in determining the number of cellulosic or advanced biofuel gallon-RINs that shall be generated for the batch.

EV = Equivalence value for the batch of renewable fuel per § 80.1415.

V_s = Standardized volume of the batch of renewable fuel at 60 °F, in gallons, calculated in accordance with paragraph (f)(8) of this section.

(v) The number of cellulosic biofuel gallon-RINs that shall be generated for the cellulosic portion of a batch of renewable fuel derived from separated MSW as defined in paragraph (f)(5)(i)(C) of this section shall be determined according to the following formula:

$$V_{RIN} = EV * V_s * R$$

Where:

V_{RIN} = RIN volume, in gallons, for use in determining the number of cellulosic biofuel

gallon-RINs that shall be generated for the batch.

EV = Equivalence value for the batch of renewable fuel per § 80.1415.

V_s = Standardized volume of the batch of renewable fuel at 60 °F, in gallons, calculated in accordance with paragraph (f)(8) of this section.

R = The calculated non-fossil fraction of the fuel as measured by a carbon-14 dating test method as provided in paragraph (f)(9) of this section.

(vi) The D code that shall be used in the RINs generated to represent separated yard waste, food waste, and MSW shall be the D code specified in Table 1 to this section, or a D code as approved by the Administrator, which corresponds to the pathway that describes the producer's operations and feedstocks.

(6) *Renewable fuel neither covered by the pathways in Table 1 to this section, nor given an approval by the Administrator for use of a specific D code.*

If none of the pathways described in Table 1 to this section apply to a producer's operations, and the producer has not received approval for the use of a specific D code by the Administrator, the party may generate RINs if the fuel from its facility is made from renewable biomass and qualifies for an exemption under § 80.1403 from the requirement that renewable fuel achieve at least a 20 percent reduction in lifecycle greenhouse gas emissions compared to baseline lifecycle greenhouse gas emissions.

(i) The number of gallon-RINs that shall be generated for a batch of renewable fuel that qualifies for an exemption from the 20 percent GHG reduction requirements under § 80.1403 shall be equal to a volume calculated according to the following formula:

$$V_{RIN} = EV * V_s$$

Where:

V_{RIN} = RIN volume, in gallons, for use in determining the number of gallon-RINs that shall be generated for the batch.

EV = Equivalence value for the batch of renewable fuel per § 80.1415.

V_s = Standardized volume of the batch of renewable fuel at 60 °F, in gallons, calculated in accordance with paragraph (f)(8) of this section.

(ii) A D code of 6 shall be used in the RINs generated under this paragraph (f)(6).

(7) *Determination of feedstock energy content factors.*

(i) For purposes of paragraphs (f)(3)(vi) and (f)(4)(i)(A)(*2*) of this section, producers must specify the value for E, the energy content of the components of the feedstock that are converted to renewable fuel, used in the calculation of the feedstock energy value FE.

(ii) The value for E shall represent the higher or gross calorific heating value for a feedstock on a zero moisture basis.

(iii) Producers must specify the value for E for each type of feedstock at least once per calendar year.

(iv) A producer must use default values for E as provided in paragraph (f)(7)(vi) of this section, or must determine alternative values for its own feedstocks according to paragraph (f)(7)(v) of this section.

(v) Producers that do not use a default value for E must use the following test methods, or alternative test methods as approved by EPA, to determine the value of E. The value of E shall be based upon the test results of a sample of feedstock that, based upon good engineering judgment, is representative of the feedstocks used to produce renewable fuel:

(A) ASTM E 870 or ASTM E 711 for gross calorific value (both incorporated by reference, see § 80.1468).

(B) ASTM D 4442 or ASTM D 4444 for moisture content (both incorporated by reference, see § 80.1468).

(vi) *Default values for E.*

(A) Starch: 7,600 Btu/lb.

(B) Sugar: 7,300 Btu/lb.

(C) Vegetable oil: 17,000 Btu/lb.

(D) Waste cooking oil or trap grease: 16,600 Btu/lb.

(E) Tallow or fat: 16,200 Btu/lb.

(F) Manure: 6,900 Btu/lb.

(G) Woody biomass: 8,400 Btu/lb.

(H) Herbaceous biomass: 7,300 Btu/lb.

(I) Yard wastes: 2,900 Btu/lb.

(J) Biogas: 11,000 Btu/lb.

(K) Food waste: 2,000 Btu/lb.

(L) Paper: 7,200 Btu/lb.

(M) Crude oil: 19,100 Btu/lb.

(N) Coal—bituminous: 12,200 Btu/lb.

(O) Coal—anthracite: 13,300 Btu/lb.

(P) Coal—lignite or sub-bituminous: 7,900 Btu/lb.

(Q) Natural gas: 19,700 Btu/lb.

(R) Tires or rubber: 16,000 Btu/lb.

(S) Plastic: 19,000 Btu/lb.

(8) *Standardization of volumes.* In determining the standardized volume of a batch of renewable fuel for purposes of generating RINs under this paragraph (f), the batch volumes shall be adjusted to a standard temperature of 60 °F.

(i) For ethanol, the following formula shall be used:

$$V_{s,e} = V_{a,e} * (-0.0006301 * T + 1.0378)$$

Where:

$V_{s,e}$ = Standardized volume of ethanol at 60 °F, in gallons.

$V_{a,e}$ = Actual volume of ethanol, in gallons.

T = Actual temperature of the batch, in °F.

(ii) For biodiesel (mono-alkyl esters), one of the following two methods for biodiesel temperature standardization to 60 °Fahrenheit (°F) shall be used

(A) $V_{s,b} = V_{a,b} * (-0.00045767 * T + 1.02746025$

Where:

$V_{s,b}$ = Standardized volume of biodiesel at 60 °F, in gallons.

$V_{a,b}$ = Actual volume of biodiesel, in gallons.

T = Actual temperature of the batch, in °F.

(B) The standardized volume of biodiesel at 60 °F, in gallons, as calculated from the use of the American Petroleum Institute Refined Products Table 6B, as referenced in ASTM D 1250 (incorporated by reference, see § 80.1468).

(iii) For other renewable fuels, an appropriate formula commonly accepted by the industry shall be used to standardize the actual volume to 60 °F. Formulas used must be reported to EPA, and may be determined to be inappropriate.

(9) *Use of radiocarbon dating test methods.*

(i) Parties may use a radiocarbon dating test method for determination of the renewable fraction of a fuel R used to determine V_{RIN} as provided in paragraphs (f)(4) and (f)(5) of this section.

(ii) Parties must use Method B or Method C of ASTM D 6866 (incorporated by reference, *see* § 80.1468), or an alternative test method as approved by EPA.

(iii) For each batch of fuel, the value of R must be based on:

(A) A radiocarbon dating test of the batch of fuel produced; or

(B) A radiocarbon dating test of a composite sample of previously produced fuel, if all of the following conditions are met:

(*1*) Based upon good engineering judgment, the renewable fraction of the composite sample must be representative of the batch of fuel produced.

(*2*) The composite sample is comprised of a volume weighted combination of samples from every batch of partially renewable transportation fuel produced by the party over a period not to exceed one calendar month, or more frequently if necessary to ensure that the test results are representative of the renewable fraction of the partially renewable fuel.

(*3*) The composite sample must be well mixed prior to testing.

(*4*) A volume of each composite sample must be retained for a minimum of two years, and be of sufficient volume to permit two additional tests to be conducted.

(iv) If the party is using the composite sampling approach according to paragraph (f)(9)(iii)(B) of this section, the party may estimate the value of R for use in generating RINs in the first month if all of the following conditions are met:

(A) The estimate of R for the first month is based on information on the composition of the feedstock;

(B) The party calculates R in the second month based on the application of a radiocarbon dating test on a composite sample pursuant to (f)(9)(iii)(B) of this section; and

(C) The party adjusts the value of R used to generate RINs in the second month using the following formula

$$R_{i+1,adj} = 2 \times R_{i+1,calc} - R_{i,est}$$

Where

$R_{i+1,adj}$ = Adjusted value of R for use in generating RINs in month the second month i+1.

$R_{i+1,calc}$ = Calculated value of R in second month i+1 by applying a radiocarbon dating test method to a composite sample of fuel.

$R_{i,est}$ = Estimate of R for the first month i.

(10)(i) For purposes of this section, renewable electricity or biogas that is not introduced into a distribution system with fuels derived from non-renewable feedstocks is considered renewable fuel and the producer may generate RINs if all of the following apply:

(A) The fuel is produced from renewable biomass and qualifies for a D code in Table 1 to this section or has received approval for use of a D code by the Administrator;

(B) The fuel producer has entered into a written contract for the sale and use of a specific quantity of renewable electricity or biogas as transportation fuel; and

(C) The renewable electricity or biogas is used as a transportation fuel.

(ii) A producer of renewable electricity that is generated by co-firing a combination of renewable biomass and fossil fuel may generate RINs only for the portion attributable to the renewable biomass, using the procedure described in paragraph (f)(4) of this section.

(11)(i) For purposes of this section, renewable electricity or biogas that is introduced into a commercial distribution system may be considered renewable fuel and the producer may generate RINs if:

(A) The fuel is produced from renewable biomass and qualifies for a D code in Table 1 of this section or has received approval for use of a D code by the Administrator;

(B) The fuel producer has entered into a written contract for the sale of a specific quantity of fuel derived from renewable biomass sources with a party that uses fuel taken from a commercial distribution system for transportation purposes, and such fuel has been introduced into that commercial distribution system (e.g., pipeline, transmission line); and

(C) The quantity of biogas or renewable electricity for which RINs were generated was sold for use as transportation fuel and for no other purposes.

(ii) For biogas that is introduced into a commercial distribution system, the producer may generate RINs only for the volume of biogas that has been gathered, processed, and injected into a common carrier pipeline if:

(A) The gas that is ultimately withdrawn from that pipeline for transportation purposes is withdrawn in a manner and at a time consistent with the transport of fuel between the injection and withdrawal points; and

(B) The volume and heat content of biogas injected into the pipeline and the volume of gas used as transportation fuel are measured by continuous metering.

(iii) The fuel used for transportation purposes is considered produced from renewable biomass only to the extent that:

(A) The amount of fuel sold for use as transportation fuel matches the amount of fuel derived from renewable biomass that the producer contracted to have placed into the commercial distribution system; and

(B) No other party relied upon the contracted volume of biogas for the creation of RINs.

(iv) For renewable electricity that is generated by co-firing a combination of renewable biomass and fossil fuel, the producer may generate RINs only for the portion attributable to the renewable biomass, using the procedure described in paragraph (f)(4) of this section.

(12)(i) For purposes of Table 1 to this section, process heat produced from combustion of gas at a renewable fuel facility is considered derived from biomass if the gas used for process heat is biogas, and is generated at the facility or directly transported to the facility and meets all of the following conditions:

(A) The producer has entered into a written contract for the procurement of a specific volume of biogas with a specific heat content.

(B) The volume of biogas was sold to the renewable fuel production facility, and to no other facility.

(C) The volume of biogas has been gathered, processed and injected into a common carrier pipeline and the gas that is ultimately withdrawn from that pipeline is withdrawn in a manner and at a time consistent with the transport of fuel between the injection and withdrawal points.

(D) The volume and heat content of biogas injected into the pipeline and the volume of gas used as process heat are measured by continuous metering.

(E) The common carrier pipeline into which the biogas is placed ultimately serves the producer's renewable fuel facility.

(ii) The process heat produced from combustion of gas at a renewable fuel facility described in (f)(12)(i) of this

section shall not be considered derived from biomass if any other party relied upon the contracted volume of biogas for the creation of RINs.

[75 FR 14863, Mar. 26, 2010, as amended at 75 FR 26038, May 10, 2010; 75 FR 37733, June 30, 2010]

§ 80.1427 How are RINs used to demonstrate compliance?

(a) *Renewable Volume Obligations.* (1) Except as specified in paragraph (b) of this section or § 80.1456, each party that is an obligated party under § 80.1406 and is obligated to meet the Renewable Volume Obligations under § 80.1407, or is an exporter of renewable fuels that is obligated to meet Renewable Volume Obligations under § 80.1430, must demonstrate pursuant to § 80.1451(a)(1) that it is retiring for compliance purposes a sufficient number of RINs to satisfy the following equations:

(i) *Cellulosic biofuel.*

$$(\Sigma RINNUM)_{CB,i} + (\Sigma RINNUM)_{CB,i-1} = RVO_{CB,i}$$

Where:

$(\Sigma RINNUM)_{CB,i}$ = Sum of all owned gallon-RINs that are valid for use in complying with the cellulosic biofuel RVO, were generated in year i, and are being applied towards the $RVO_{CB,i}$, in gallons.

$(\Sigma RINNUM)_{CB,i-1}$ = Sum of all owned gallon-RINs that are valid for use in complying with the cellulosic biofuel RVO, were generated in year i-1, and are being applied towards the $RVO_{CB,i}$, in gallons.

$RVO_{CB,i}$ = The Renewable Volume Obligation for cellulosic biofuel for the obligated party or renewable fuel exporter for calendar year i, in gallons, pursuant to § 80.1407 or § 80.1430.

(ii) *Biomass-based diesel.* Use the equation in this paragraph, except as provided in paragraph (a)(7) of this section.

$$(\Sigma RINNUM)_{BBD,i} + (\Sigma RINNUM)_{BBD,i-1} = RVO_{BBD,i}$$

Where:

$(\Sigma RINNUM)_{BBD,i}$ = Sum of all owned gallon-RINs that are valid for use in complying with the biomass-based diesel RVO, were generated in year i, and are being applied towards the $RVO_{BBD,i}$, in gallons.

$(\Sigma RINNUM)_{BBD,i-1}$ = Sum of all owned gallon-RINs that are valid for use in complying with the biomass-based diesel RVO, were generated in year i-1, and are being applied towards the $RVO_{BBD,i}$, in gallons.

$RVO_{BBD,i}$ = The Renewable Volume Obligation for biomass-based diesel for the obligated party or renewable fuel exporter for calendar year i after 2010, in gallons, pursuant to § 80.1407 or § 80.1430.

(iii) *Advanced biofuel.*

$$(\Sigma RINNUM)_{AB,i} + (\Sigma RINNUM)_{AB,i-1} = RVO_{AB,i}$$

Where

$(\Sigma RINNUM)_{AB,i}$ = Sum of all owned gallon-RINs that are valid for use in complying with the advanced biofuel RVO, were generated in year i, and are being applied towards the $RVO_{AB,i}$, in gallons.

$(\Sigma RINNUM)_{AB,i-1}$ = Sum of all owned gallon-RINs that are valid for use in complying with the advanced biofuel RVO, were generated in year i-1, and are being applied towards the $RVO_{AB,i}$, in gallons.

$RVO_{AB,i}$ = The Renewable Volume Obligation for advanced biofuel for the obligated party or renewable fuel exporter for calendar year i, in gallons, pursuant to § 80.1407 or § 80.1430.

(iv) *Renewable fuel.*

$$(\Sigma RINNUM)_{RF,i} + (\Sigma RINNUM)_{RF,i-1} = RVO_{RF,i}$$

Where:

$(\Sigma RINNUM)_{RF,i}$ = Sum of all owned gallon-RINs that are valid for use in complying with the renewable fuel RVO, were generated in year i, and are being applied towards the $RVO_{RF,i}$, in gallons.

$(\Sigma RINNUM)_{RF,i-1}$ = Sum of all owned gallon-RINs that are valid for use in complying with the renewable fuel RVO, were generated in year i-1, and are being applied towards the $RVO_{RF,i}$, in gallons.

$RVO_{RF,i}$ = The Renewable Volume Obligation for renewable fuel for the obligated party or renewable fuel exporter for calendar year i, in gallons, pursuant to § 80.1407 or § 80.1430.

(2) Except as described in paragraph (a)(4) of this section, RINs that are valid for use in complying with each Renewable Volume Obligation are determined by their D codes.

(i) RINs with a D code of 3 or 7 are valid for compliance with the cellulosic biofuel RVO.

(ii) RINs with a D code of 4 or 7 are valid for compliance with the biomass-based diesel RVO.

(iii) RINs with a D code of 3, 4, 5, or 7 are valid for compliance with the advanced biofuel RVO.

(iv) RINs with a D code of 3, 4, 5, 6, or 7 are valid for compliance with the renewable fuel RVO.

(3)(i) Except as provided in paragraph (a)(3)(ii) of this section, a party may use the same RIN to demonstrate compliance with more than one RVO so long as it is valid for compliance with all RVOs to which it is applied.

(ii) A cellulosic diesel RIN with a D code of 7 cannot be used to demonstrate compliance with both a cellulosic biofuel RVO and a biomass-based diesel RVO.

(4) Notwithstanding the requirements of § 80.1428(c) or paragraph (a)(6)(i) of this section, for purposes of demonstrating compliance for calendar years 2010 or 2011, RINs generated pursuant to § 80.1126 that have not been used for compliance purposes may be used for compliance in 2010 or 2011, as follows, insofar as permissible pursuant to paragraphs (a)(5) and (a)(7)(iii) of this section:

(i) A RIN generated pursuant to § 80.1126 with a D code of 2 and an RR code of 15, 16, or 17 is deemed equivalent to a RIN generated pursuant to § 80.1426 having a D code of 4.

(ii) A RIN generated pursuant to § 80.1126 with a D code of 1 is deemed equivalent to a RIN generated pursuant to § 80.1426 having a D code of 3.

(iii) All other RINs generated pursuant to § 80.1126 are deemed equivalent to RINs generated pursuant to § 80.1426 having D codes of 6.

(iv) A RIN generated pursuant to § 80.1126 that was retired pursuant to § 80.1129(e) because the associated volume of fuel was not used as motor vehicle fuel may be reinstated for use in complying with a 2010 RVO pursuant to § 80.1429(g).

(5) The value of $(\Sigma RINNUM)_{i-1}$ may not exceed values determined by the following inequalities except as provided in paragraph (a)(7)(iii) of this section and § 80.1442(d)

$$(\Sigma RINNUM)_{CB,i-1} \leq 0.20 * RVO_{CB,i}$$
$$(\Sigma RINNUM)_{BBD,i-1} \leq 0.20 * RVO_{BBD,i}$$
$$(\Sigma RINNUM)_{AB,i-1} \leq 0.20 * RVO_{AB,i}$$
$$(\Sigma RINNUM)_{RF,i-1} \leq 0.20 * RVO_{RF,i}$$

(6) Except as provided in paragraph (a)(7) of this section:

(i) RINs may only be used to demonstrate compliance with the RVOs for the calendar year in which they were generated or the following calendar year.

(ii) RINs used to demonstrate compliance in one year cannot be used to demonstrate compliance in any other year.

(7) *Biomass-based diesel in 2010.*

(i) Prior to determining compliance with the 2010 biomass-based diesel RVO, obligated parties may reduce the value of $RVO_{BBD,2010}$ by an amount equal to the sum of all 2008 and 2009 RINs that they used for compliance purposes for calendar year 2009 which have a D code of 2 and an RR code of 15, 16, or 17.

(ii) For calendar year 2010 only, the following equation shall be used to determine compliance with the biomass-based diesel RVO instead of the equation in paragraph (a)(1)(ii) of this section

$$(\Sigma RINNUM)_{BBD,2010} + (\Sigma RINNUM)_{BBD,2009} + (\Sigma RINNUM)_{BBD,2008} = RVO_{BBD,2010}$$

Where

$(\Sigma RINNUM)_{BBD,2010}$ = Sum of all owned gallon-RINs that are valid for use in complying with the biomass-based diesel RVO, were generated in year 2010, and are being applied towards the $RVO_{BBD,2010}$, in gallons.

$(\Sigma RINNUM)_{BBD,2009}$ = Sum of all owned gallon-RINs that are valid for use in complying with the biomass-based diesel RVO, were generated in year 2009, have not previously been used for compliance purposes, and are being applied towards the $RVO_{BBD,2010}$, in gallons.

$(\Sigma RINNUM)_{BBD,2008}$ = Sum of all owned gallon-RINs that are valid for use in complying with the biomass-based diesel RVO, were generated in year 2008, have not previously been used for compliance purposes, and are being applied towards the $RVO_{BBD,2010}$, in gallons.

$RVO_{BBD,2010}$ = The Renewable Volume Obligation for biomass-based diesel for the obligated party for calendar year 2010, in gallons, pursuant to § 80.1407 or § 80.1430, as adjusted by paragraph (a)(7)(i) of this section.

(iii) The values of $(\Sigma RINNUM)_{2008}$ and $(\Sigma RINNUM)_{2009}$ may not exceed values determined by both of the following inequalities

$$(\Sigma RINNUM)_{BBD,2008} \leq 0.087 * RVO_{BBD,2010}$$
$$(\Sigma RINNUM)_{BBD,2008} + (\Sigma RINNUM)_{BBD,2009} \leq 0.20 * RVO_{BBD,2010}$$

(8) A party may only use a RIN for purposes of meeting the requirements of paragraph (a)(1) or (a)(7) of this section if that RIN is a separated RIN with a K code of 2 obtained in accordance with §§ 80.1428 and 80.1429.

(9) The number of gallon-RINs associated with a given batch-RIN that can be used for compliance with the RVOs shall be calculated from the following formula

RINNUM = EEEEEEEE − SSSSSSSS + 1

Where:

RINNUM = Number of gallon-RINs associated with a batch-RIN, where each gallon-RIN represents one gallon of renewable fuel for compliance purposes.

EEEEEEEE = Batch-RIN component identifying the last gallon-RIN associated with the batch-RIN.

SSSSSSSS = Batch-RIN component identifying the first gallon-RIN associated with the batch-RIN.

(b) *Deficit carryovers.* (1) An obligated party or an exporter of renewable fuel that fails to meet the requirements of paragraph (a)(1) or (a)(7) of this section for calendar year i is permitted to carry a deficit into year i+1 under the following conditions:

(i) The party did not carry a deficit into calendar year i from calendar year i-1 for the same RVO.

(ii) The party subsequently meets the requirements of paragraph (a)(1) of this section for calendar year i+1 and carries no deficit into year i+2 for the same RVO.

(iii) For compliance with the biomass-based diesel RVO in calendar year 2011, the deficit which is carried over from 2010 is no larger than 57% of the party's 2010 biomass-based diesel RVO as determined prior to any adjustment applied pursuant to paragraph (a)(7)(i) of this section.

(iv) The party uses the same compliance approach in year i+1 as it did in year i, as provided in § 80.1406(c)(2).

(2) A deficit is calculated according to the following formula:

$$D_i = RVO_i - [(\Sigma RINNUM)_i + (\Sigma RINNUM)_{i-1}]$$

Where:

D_i = The deficit, in gallons, generated in calendar year i that must be carried over to year i+1 if allowed pursuant to paragraph (b)(1) of this section.

RVO_i = The Renewable Volume Obligation for the obligated party or renewable fuel exporter for calendar year i, in gallons.

$(\Sigma RINNUM)_i$ = Sum of all acquired gallon-RINs that were generated in year i and are being applied towards the RVO_i, in gallons.

$(\Sigma RINNUM)_{i-1}$ = Sum of all acquired gallon-RINs that were generated in year i-1 and are being applied towards the RVO_i, in gallons.

[75 FR 14863, Mar. 26, 2010, as amended at 75 FR 26042, May 10, 2010]

§ 80.1428 General requirements for RIN distribution.

(a) *RINs assigned to volumes of renewable fuel.*

(1) *Assigned RIN*, for the purposes of this subpart, means a RIN assigned to a volume of renewable fuel pursuant to § 80.1426(e) with a K code of 1.

(2) Except as provided in § 80.1429, no person can separate a RIN that has been assigned to a batch pursuant to § 80.1426(e).

(3) An assigned RIN cannot be transferred to another person without simultaneously transferring a volume of renewable fuel to that same person.

(4) No more than 2.5 assigned gallon-RINs with a K code of 1 can be transferred to another person with every gallon of renewable fuel transferred to that same person.

(5)(i) On each of the dates listed in paragraph (a)(5)(ii) of this section in any calendar year, the following equation must be satisfied for assigned RINs and volumes of renewable fuel owned by a person:

$$\Sigma(RIN)_D \leq \Sigma(V_{si} * 2.5)_D$$

Where:

D = Applicable date.

$\Sigma(RIN)_D$ = Sum of all assigned gallon-RINs with a K code of 1 that are owned on date D.

$(V_{si})_D$ = Volume i of renewable fuel owned on date D, standardized to 60 °F, in gallons.

(ii) The applicable dates are March 31, June 30, September 30, and December 31.

(6) Any transfer of ownership of assigned RINs must be documented on product transfer documents generated pursuant to § 80.1453.

(i) The RIN must be recorded on the product transfer document used to transfer ownership of the volume of renewable fuel to another person; or

(ii) The RIN must be recorded on a separate product transfer document transferred to the same person on the

same day as the product transfer document used to transfer ownership of the volume of renewable fuel.

(b) *RINs separated from volumes of renewable fuel.*

(1) *Separated RIN*, for the purposes of this subpart, means a RIN with a K code of 2 that has been separated from a volume of renewable fuel pursuant to § 80.1429.

(2) Any person that has registered pursuant to § 80.1450 can own a separated RIN.

(3) Separated RINs can be transferred any number of times.

(c) *RIN expiration.* Except as provided in § 80.1427(a)(7), a RIN is valid for compliance during the calendar year in which it was generated, or the following calendar year. Any RIN that is not used for compliance purposes for the calendar year in which it was generated, or for the following calendar year, will be considered an expired RIN. Pursuant to § 80.1431(a), an expired RIN will be considered an invalid RIN and cannot be used for compliance purposes.

(d) Any batch-RIN can be divided into multiple batch-RINs, each representing a smaller number of gallon-RINs, if all of the following conditions are met:

(1) All RIN components other than SSSSSSSS and EEEEEEEE are identical for the original parent and newly formed daughter RINs.

(2) The sum of the gallon-RINs associated with the multiple daughter batch-RINs is equal to the gallon-RINs associated with the parent batch-RIN.

[75 FR 14863, Mar. 26, 2010, as amended at 75 FR 26042, May 10, 2010]

§ 80.1429 Requirements for separating RINs from volumes of renewable fuel.

(a)(1) Separation of a RIN from a volume of renewable fuel means termination of the assignment of the RIN to a volume of renewable fuel.

(2) RINs that have been separated from volumes of renewable fuel become separated RINs subject to the provisions of § 80.1428(b).

(b) A RIN that is assigned to a volume of renewable fuel can be separated from that volume only under one of the following conditions:

(1) Except as provided in paragraphs (b)(7) and (b)(9) of this section, a party that is an obligated party according to § 80.1406 must separate any RINs that have been assigned to a volume of renewable fuel if that party owns that volume.

(2) Except as provided in paragraph (b)(6) of this section, any party that owns a volume of renewable fuel must separate any RINs that have been assigned to that volume once the volume is blended with gasoline or diesel to produce a transportation fuel, heating oil, or jet fuel. A party may separate up to 2.5 RINs per gallon of blended renewable fuel.

(3) Any party that exports a volume of renewable fuel must separate any RINs that have been assigned to the exported volume. A party may separate up to 2.5 RINs per gallon of exported renewable fuel.

(4) Any party that produces, imports, owns, sells, or uses a volume of neat renewable fuel, or a blend of renewable fuel and diesel fuel, must separate any RINs that have been assigned to that volume of neat renewable fuel or that blend if:

(i) The party designates the neat renewable fuel or blend as transportation fuel, heating oil, or jet fuel; and

(ii) The neat renewable fuel or blend is used without further blending, in the designated form, as transportation fuel, heating oil, or jet fuel.

(5) Any party that produces, imports, owns, sells, or uses a volume of electricity or biogas for which RINs have been generated in accordance with § 80.1426(f) must separate any RINs that have been assigned to that volume of renewable electricity or biogas if:

(i) The party designates the electricity or biogas as transportation fuel; and

(ii) The electricity or biogas is used as transportation fuel.

(6) RINs assigned to a volume of biodiesel (mono-alkyl ester) can only be separated from that volume pursuant to paragraph (b)(2) of this section if such biodiesel is blended into diesel fuel at a concentration of 80 volume percent biodiesel (mono-alkyl ester) or less.

(i) This paragraph (b)(6) shall not apply to biodiesel owned by obligated

parties or to exported volumes of biodiesel.

(ii) This paragraph (b)(6) shall not apply to parties meeting the requirements of paragraph (b)(4) of this section.

(7) For RINs that an obligated party generates for renewable fuel that has not been blended into gasoline or diesel to produce a transportation fuel, heating oil, or jet fuel, the obligated party can only separate such RINs from volumes of renewable fuel if the number of gallon-RINs separated in a calendar year are less than or equal to a limit set as follows:

(i) For RINs with a D code of 3, the limit shall be equal to RVO_{CB}.

(ii) For RINs with a D code of 4, the limit shall be equal to RVO_{BBD}.

(iii) For RINs with a D code of 7, the limit shall be equal to the larger of RVO_{BBD} or RVO_{CB}.

(iv) For RINs with a D code of 5, the limit shall be equal to $RVO_{AB} - RVO_{CB} - RVO_{BBD}$.

(v) For RINs with a D code of 6, the limit shall be equal to $RVO_{RF} - RVO_{AB}$.

(8) Small refiners and small refineries may only separate RINs that have been assigned to volumes of renewable fuel that the party blends into gasoline or diesel to produce transportation fuel, heating oil, or jet fuel, or that the party used as transportation fuel, heating oil, or jet fuel. This paragraph (b)(8) shall apply only under the following conditions:

(i) During the calendar year in which the party has received a small refinery exemption under § 80.1441 or a small refiner exemption under § 80.1442; and

(ii) The party is not otherwise an obligated party during the period of time that the small refinery or small refiner exemption is in effect.

(9) Except as provided in paragraphs (b)(2) through (b)(5) and (b)(8) of this section, RINs owned by obligated parties whose non-export renewable volume obligations are solely related to the addition of blendstocks into a volume of finished gasoline, finished diesel fuel, RBOB, or CBOB, can only be separated from volumes of renewable fuel if the number of gallon-RINs separated in a calendar year are less than or equal to a limit set as follows:

(i) For RINs with a D code of 3, the limit shall be equal to RVO_{CB}.

(ii) For RINs with a D code of 4, the limit shall be equal to RVO_{BBD}.

(iii) For RINs with a D code of 7, the limit shall be equal to the larger of RVO_{BBD} or RVO_{CB}.

(iv) For RINs with a D code of 5, the limit shall be equal to $RVO_{AB} - RVO_{CB} - RVO_{BBD}$.

(v) For RINs with a D code of 6, the limit shall be equal to $RVO_{RF} - RVO_{AB}$.

(c) The party responsible for separating a RIN from a volume of renewable fuel shall change the K code in the RIN from a value of 1 to a value of 2 prior to transferring the RIN to any other party.

(d) Upon and after separation of a RIN from its associated volume of renewable fuel, the separated RIN must be accompanied by a PTD pursuant to § 80.1453 when transferred to another party.

(e) Upon and after separation of a RIN from its associated volume of renewable fuel, product transfer documents used to transfer ownership of the volume must meet the requirements of § 80.1453.

(f) Any party that uses a renewable fuel in any application that is not transportation fuel, heating oil, or jet fuel, or designates a renewable fuel for use as something other than transportation fuel, heating oil, or jet fuel, must retire any RINs received with that renewable fuel and report the retired RINs in the applicable reports under § 80.1451.

(g) Any 2009 or 2010 RINs retired pursuant to § 80.1129 because renewable fuel was used in a nonroad vehicle or nonroad engine (except for ocean-going vessels), or as heating oil or jet fuel may be reinstated by the retiring party for sale or use to demonstrate compliance with a 2010 RVO.

[75 FR 14863, Mar. 26, 2010, as amended at 75 FR 26042, May 10, 2010]

§ 80.1430 Requirements for exporters of renewable fuels.

(a) Any party that owns any amount of renewable fuel, whether in its neat form or blended with gasoline or diesel, that is exported from any of the regions described in § 80.1426(b) shall acquire sufficient RINs to comply with

all applicable Renewable Volume Obligations under paragraphs (b) through (e) of this section representing the exported renewable fuel.

(b) *Renewable Volume Obligations.* An exporter of renewable fuel shall determine its Renewable Volume Obligations from the volumes of the renewable fuel exported.

(1) *Cellulosic biofuel.*

$$RVO_{CB,i} = \Sigma(VOL_k * EV_k)_i + D_{CB,i-1}$$

Where:

$RVO_{CB,i}$ = The Renewable Volume Obligation for cellulosic biofuel for the exporter for calendar year i, in gallons.

k = A discrete volume of exported renewable fuel.

VOL_k = The standardized volume of discrete volume k of exported renewable fuel that the exporter knows or has reason to know is cellulosic biofuel, in gallons, calculated in accordance with § 80.1426(f)(8).

EV_k = The equivalence value associated with discrete volume k.

Σ = Sum involving all volumes of cellulosic biofuel exported.

$D_{CB,i-1}$ = Deficit carryover from the previous year for cellulosic biofuel, in gallons.

(2) *Biomass-based diesel.*

$$RVO_{BBD,i} = \Sigma(VOL_k * EV_k)_i + D_{BBD,i-1}$$

Where:

$RVO_{BBD,i}$ = The Renewable Volume Obligation for biomass-based diesel for the exporter for calendar year i, in gallons.

k = A discrete volume of exported renewable fuel.

VOL_k = The standardized volume of discrete volume k of exported renewable fuel that is biodiesel or renewable diesel, in gallons, calculated in accordance with § 80.1426(f)(8).

EV_k = The equivalence value associated with discrete volume k.

Σ = Sum involving all volumes of biodiesel or renewable diesel exported.

$D_{BBD,i-1}$ = Deficit carryover from the previous year for biomass-based diesel, in gallons.

(3) *Advanced biofuel.*

$$RVO_{AB,i} = \Sigma(VOL_k * EV_k)_i + D_{AB,i-1}$$

Where:

$RVO_{AB,i}$ = The Renewable Volume Obligation for advanced biofuel for the exporter for calendar year i, in gallons.

k = A discrete volume of exported renewable fuel.

VOL_k = The standardized volume of discrete volume k of exported renewable fuel that is biodiesel or renewable diesel, or that the exporter knows or has reason to know is cellulosic biofuel or advanced biofuel, in gallons, calculated in accordance with § 80.1426(f)(8).

EV_k = The equivalence value associated with discrete volume k.

Σ = Sum involving all volumes of advanced biofuel exported.

$D_{AB,i-1}$ = Deficit carryover from the previous year for advanced biofuel, in gallons.

(4) *Renewable fuel.*

$$RVO_{RF,i} = \Sigma(VOL_k * EV_k)_i + D_{RF,i-1}$$

Where:

$RVO_{RF,i}$ = The Renewable Volume Obligation for renewable fuel for the exporter for calendar year i, in gallons.

k = A discrete volume of exported renewable fuel.

VOL_k = The standardized volume of discrete volume k of any exported renewable fuel, in gallons, calculated in accordance with § 80.1426(f)(8).

EV_k = The equivalence value associated with discrete volume k.

Σ = Sum involving all volumes of renewable fuel exported.

$D_{RF,i-1}$ = Deficit carryover from the previous year for renewable fuel, in gallons.

(c) If the exporter knows or has reason to know that a volume of exported renewable fuel is cellulosic diesel, he must treat the exported volume as either cellulosic biofuel or biomass-based diesel when determining his Renewable Volume Obligations pursuant to paragraph (b) of this section.

(d) For the purposes of calculating the Renewable Volume Obligations:

(1) If the equivalence value for a volume of exported renewable fuel can be determined pursuant to § 80.1415 based on its composition, then the appropriate equivalence value shall be used in the calculation of the exporter's Renewable Volume Obligations under paragraph (b) of this section.

(2) If the category of the exported renewable fuel is known to be biomass-based diesel but the composition is unknown, the value of EV_k shall be 1.5.

(3) If neither the category nor composition of a volume of exported renewable fuel can be determined, the value of EV_k shall be 1.0.

(e) For renewable fuels that are in the form of a blend with gasoline or diesel at the time of export, the exporter shall determine the volume of exported renewable fuel based on one of the following:

(1) Information from the supplier of the blend of the concentration of renewable fuel in the blend.

(2) Determination of the renewable portion of the blend using Method B or Method C of ASTM D 6866 (incorporated by reference, see § 80.1468), or an alternative test method as approved by the EPA.

(3) Assuming the maximum concentration of the renewable fuel in the blend as allowed by law and/or regulation.

(f) Each exporter of renewable fuel must demonstrate compliance with its RVOs pursuant to § 80.1427.

[75 FR 14863, Mar. 26, 2010, as amended at 75 FR 26042, May 10, 2010]

§ 80.1431 Treatment of invalid RINs.

(a) *Invalid RINs.*

(1) An invalid RIN is a RIN that is any of the following:

(i) A duplicate of a valid RIN.

(ii) Was based on incorrect volumes or volumes that have not been standardized to 60 °F.

(iii) Has expired, as provided in § 80.1428(c).

(iv) Was based on an incorrect equivalence value.

(v) Deemed invalid under § 80.1467(g).

(vi) Does not represent renewable fuel as defined in § 80.1401.

(vii) Was assigned an incorrect ''D'' code value under § 80.1426(f) for the associated volume of fuel.

(viii) Was improperly separated pursuant to § 80.1429.

(ix) Was otherwise improperly generated.

(2) In the event that the same RIN is transferred to two or more parties, all such RINs are deemed invalid, unless EPA in its sole discretion determines that some portion of these RINs is valid.

(b) In the case of RINs that are invalid, the following provisions apply:

(1) Upon determination by any party that RINs owned are invalid, the party must keep copies and adjust its records, reports, and compliance calculations in which the invalid RINs were used. The party must retire the invalid RINs in the applicable RIN transaction reports under § 80.1451(c)(2) for the quarter in which the RINs were determined to be invalid.

(2) Invalid RINs cannot be used to achieve compliance with the Renewable Volume Obligations of an obligated party or exporter, regardless of the party's good faith belief that the RINs were valid at the time they were acquired.

(3) Any valid RINs remaining after invalid RINs are retired must first be applied to correct the transfer of invalid RINs to another party before applying the valid RINs to meet the party's Renewable Volume Obligations at the end of the compliance year.

§ 80.1432 Reported spillage or disposal of renewable fuel.

(a) A reported spillage or disposal under this subpart means a spillage or disposal of renewable fuel associated with a requirement by a federal, state, or local authority to report the spillage or disposal.

(b) Except as provided in paragraph (c) of this section, in the event of a reported spillage or disposal of any volume of renewable fuel, the owner of the renewable fuel must retire a number of RINs corresponding to the volume of spilled or disposed of renewable fuel multiplied by its equivalence value.

(1) If the equivalence value for the spilled or disposed of volume may be determined pursuant to § 80.1415 based on its composition, then the appropriate equivalence value shall be used.

(2) If the equivalence value for a spilled or disposed of volume of renewable fuel cannot be determined, the equivalence value shall be 1.0.

(c) If the owner of a volume of renewable fuel that is spilled or disposed of and reported establishes that no RINs were generated to represent the volume, then no RINs shall be retired.

(d) A RIN that is retired under paragraph (b) of this section:

(1) Must be reported as a retired RIN in the applicable reports under § 80.1451.

(2) May not be transferred to another person or used by any obligated party to demonstrate compliance with the party's Renewable Volume Obligations.

§§ 80.1433–80.1439 [Reserved]

§ 80.1440 What are the provisions for blenders who handle and blend less than 125,000 gallons of renewable fuel per year?

(a) Renewable fuel blenders who handle and blend less than 125,000 gallons of renewable fuel per year, and who do not have Renewable Volume Obligations, are permitted to delegate their RIN-related responsibilities to the party directly upstream of them who supplied the renewable fuel for blending.

(b) The RIN-related responsibilities that may be delegated directly upstream include all of the following:

(1) The RIN separation requirements of § 80.1429.

(2) The reporting requirements of § 80.1451.

(3) The recordkeeping requirements of § 80.1454.

(4) The attest engagement requirements of § 80.1464.

(c) For upstream delegation of RIN-related responsibilities, both parties must agree on the delegation, and a quarterly written statement signed by both parties must be included with the reporting party's reports under § 80.1451.

(1) Both parties must keep copies of the signed quarterly written statement agreeing to the upward delegation for 5 years.

(2) Parties delegating their RIN responsibilities upward shall keep copies of their registration forms as submitted to EPA.

(3) A renewable fuel blender who delegates its RIN-related responsibilities under this section will remain liable for any violation of this subpart M associated with its renewable fuel blending activities.

(d) Renewable fuel blenders who handle and blend less than 125,000 gallons of renewable fuel per year and delegate their RIN-related responsibilities under paragraph (b) of this section must register pursuant to § 80.1450(e), and may not own RINs.

(e) Renewable fuel blenders who handle and blend less than 125,000 gallons of renewable fuel per year and who do not opt to delegate their RIN-related responsibilities, or own RINs, will be subject to all requirements stated in paragraph (b) of this section, and all other applicable requirements of this subpart M.

[75 FR 14863, Mar. 26, 2010, as amended at 75 FR 26042, May 10, 2010]

§ 80.1441 Small refinery exemption.

(a)(1) Transportation fuel produced at a refinery by a refiner, or foreign refiner (as defined at § 80.1465(a)), is exempt from January 1, 2010 through December 31, 2010 from the renewable fuel standards of § 80.1405, and the owner or operator of the refinery, or foreign refinery, is exempt from the requirements that apply to obligated parties under this subpart M for fuel produced at the refinery if the refinery meets the definition of a small refinery under § 80.1401 for calendar year 2006.

(2) The exemption of paragraph (a)(1) of this section shall apply unless a refiner chooses to waive this exemption (as described in paragraph (f) of this section), or the exemption is extended (as described in paragraph (e) of this section).

(3) For the purposes of this section, the term ''refiner'' shall include foreign refiners.

(4) This exemption shall only apply to refineries that process crude oil through refinery processing units.

(5) The small refinery exemption is effective immediately, except as specified in paragraph (b)(3) of this section.

(6) Refiners who own refineries that qualified as small under 40 CFR 80.1141 do not need to resubmit a small refinery verification letter under this subpart M. This paragraph (a) does not supersede § 80.1141.

(b)(1) A refiner owning a small refinery must submit a verification letter to EPA containing all of the following information:

(i) The annual average aggregate daily crude oil throughput for the period January 1, 2006 through December 31, 2006 (as determined by dividing the aggregate throughput for the calendar year by the number 365).

(ii) A letter signed by the president, chief operating or chief executive officer of the company, or his/her designee, stating that the information contained in the letter is true to the best of his/

her knowledge, and that the refinery was small as of December 31, 2006.

(iii) Name, address, phone number, facsimile number, and e-mail address of a corporate contact person.

(2) Verification letters must be submitted by July 1, 2010 to one of the addresses listed in paragraph (h) of this section.

(3) For foreign refiners the small refinery exemption shall be effective upon approval, by EPA, of a small refinery application. The application must contain all of the elements required for small refinery verification letters (as specified in paragraph (b)(1) of this section), must satisfy the provisions of § 80.1465(f) through (i) and (o), and must be submitted by July 1, 2010 to one of the addresses listed in paragraph (h) of this section.

(4) Small refinery verification letters are not required for those refiners who have already submitted a complete verification letter under subpart K of this part 80. Verification letters submitted under subpart K prior to July 1, 2010 that satisfy the requirements of subpart K shall be deemed to satisfy the requirements for verification letters under this subpart M.

(c) If EPA finds that a refiner provided false or inaccurate information regarding a refinery's crude throughput (pursuant to paragraph (b)(1)(i) of this section) in its small refinery verification letter, the exemption will be void as of the effective date of these regulations.

(d) If a refiner is complying on an aggregate basis for multiple refineries, any such refiner may exclude from the calculation of its Renewable Volume Obligations (under § 80.1407) transportation fuel from any refinery receiving the small refinery exemption under paragraph (a) of this section.

(e)(1) The exemption period in paragraph (a) of this section shall be extended by the Administrator for a period of not less than two additional years if a study by the Secretary of Energy determines that compliance with the requirements of this subpart would impose a disproportionate economic hardship on a small refinery.

(2) A refiner may petition the Administrator for an extension of its small refinery exemption, based on disproportionate economic hardship, at any time.

(i) A petition for an extension of the small refinery exemption must specify the factors that demonstrate a disproportionate economic hardship and must provide a detailed discussion regarding the hardship the refinery would face in producing transportation fuel meeting the requirements of § 80.1405 and the date the refiner anticipates that compliance with the requirements can reasonably be achieved at the small refinery.

(ii) The Administrator shall act on such a petition not later than 90 days after the date of receipt of the petition.

(f) At any time, a refiner with a small refinery exemption under paragraph (a) of this section may waive that exemption upon notification to EPA.

(1) A refiner's notice to EPA that it intends to waive its small refinery exemption must be received by November 1 to be effective in the next compliance year.

(2) The waiver will be effective beginning on January 1 of the following calendar year, at which point the transportation fuel produced at that refinery will be subject to the renewable fuels standard of § 80.1405 and the owner or operator of the refinery shall be subject to all other requirements that apply to obligated parties under this Subpart M.

(3) The waiver notice must be sent to EPA at one of the addresses listed in paragraph (h) of this section.

(g) A refiner that acquires a refinery from either an approved small refiner (as defined under § 80.1442(a)) or another refiner with an approved small refinery exemption under paragraph (a) of this section shall notify EPA in writing no later than 20 days following the acquisition.

(h) Verification letters under paragraph (b) of this section, petitions for small refinery hardship extensions under paragraph (e) of this section, and small refinery exemption waiver notices under paragraph (f) of this section shall be sent to one of the following addresses:

(1) *For US mail:* U.S. EPA, *Attn:* RFS Program, 6406J, 1200 Pennsylvania Avenue, NW., Washington, DC 20460.

(2) *For overnight or courier services:* U.S. EPA, *Attn:* RFS Program, 6406J, 1310 L Street, NW., 6th floor, Washington, DC 20005. (202) 343–9038.

§ 80.1442 What are the provisions for small refiners under the RFS program?

(a)(1) To qualify as a small refiner under this section, a refiner must meet all of the following criteria:

(i) The refiner produced transportation fuel at its refineries by processing crude oil through refinery processing units from January 1, 2006 through December 31, 2006.

(ii) The refiner employed an average of no more than 1,500 people, based on the average number of employees for all pay periods for calendar year 2006 for all subsidiary companies, all parent companies, all subsidiaries of the parent companies, and all joint venture partners.

(iii) The refiner had a corporate-average crude oil capacity less than or equal to 155,000 barrels per calendar day (bpcd) for 2006.

(2) For the purposes of this section, the term ''refiner'' shall include foreign refiners.

(3) Refiners who qualified as small under 40 CFR 80.1142 do not need to reapply for small refiner status under this subpart M. This paragraph (a) does not supersede § 80.1142.

(b)(1) The small refiner exemption in paragraph (c) of this section is effective immediately, except as provided in paragraph (b)(5) of this section, provided that all requirements of this section are satisfied.

(2) Refiners who qualify for the small refiner exemption under paragraph (a) of this section must submit a verification letter (and any other relevant information) to EPA by July 1, 2010. The small refiner verification letter must include all of the following information for the refiner and for all subsidiary companies, all parent companies, all subsidiaries of the parent companies, and all joint venture partners:

(i) A listing of the name and address of each company location where any employee worked for the period January 1, 2006 through December 31, 2006.

(ii) The average number of employees at each location based on the number of employees for each pay period for the period January 1, 2006 through December 31, 2006.

(iii) The type of business activities carried out at each location.

(iv) For joint ventures, the total number of employees includes the combined employee count of all corporate entities in the venture.

(v) For government-owned refiners, the total employee count includes all government employees.

(vi) The total corporate crude oil capacity of each refinery as reported to the Energy Information Administration (EIA) of the U.S. Department of Energy (DOE), for the period January 1, 2006 through December 31, 2006. The information submitted to EIA is presumed to be correct. In cases where a company disagrees with this information, the company may petition EPA with appropriate data to correct the record when the company submits its application.

(vii) The verification letter must be signed by the president, chief operating or chief executive officer of the company, or his/her designee, stating that the information is true to the best of his/her knowledge, and that the company owned the refinery as of December 31, 2006.

(viii) Name, address, phone number, facsimile number, and e-mail address of a corporate contact person.

(3) In the case of a refiner who acquires or reactivates a refinery that was shutdown or non-operational between January 1, 2005 and January 1, 2006, the information required in paragraph (b)(2) of this section must be provided for the time period since the refiner acquired or reactivated the refinery.

(4) [Reserved]

(5) For foreign refiners the small refiner exemption shall be effective upon approval, by EPA, of a small refiner application. The application must contain all of the elements required for small refiner verification letters (as specified in paragraph (b)(2) of this section), must satisfy the provisions of § 80.1465(f) through (h) and (o), must demonstrate compliance with the

crude oil capacity criterion of paragraph (a)(1)(iii) of this section, and must be submitted by July 1, 2010 to one of the addresses listed in paragraph (i) of this section.

(6) Small refiner verification letters submitted under subpart K (§ 80.1142) prior to July 1, 2010 that satisfy the requirements of subpart K shall be deemed to satisfy the requirements for small refiner verification letters under this subpart M.

(c) *Small refiner temporary exemption*—(1) Transportation fuel produced by an small refiner pursuant to paragraph (b)(1) of this section, or an approved foreign small refiner (as defined at § 80.1465(a)), is exempt from January 1, 2010 through December 31, 2010 from the renewable fuel standards of § 80.1405 and the requirements that apply to obligated parties under this subpart if the refiner or foreign refiner meets all the criteria of paragraph (a)(1) of this section.

(2) The small refiner exemption shall apply to a small refiner pursuant to paragraph (b)(1) of this section or an approved foreign small refiner unless that refiner chooses to waive this exemption (as described in paragraph (d) of this section).

(d)(1) A refiner may, at any time, waive the small refiner exemption under paragraph (c) of this section upon notification to EPA.

(2) A refiner's notice to EPA that it intends to waive the small refiner exemption must be received by November 1 of a given year in order for the waiver to be effective for the following calendar year. The waiver will be effective beginning on January 1 of the following calendar year, at which point the refiner will be subject to the renewable fuel standards of § 80.1405 and the requirements that apply to obligated parties under this subpart.

(3) The waiver must be sent to EPA at one of the addresses listed in paragraph (i) of this section.

(e) Refiners who qualify as small refiners under this section and subsequently fail to meet all of the qualifying criteria as set out in paragraph (a) of this section are disqualified as small refiners of January 1 of the next calendar year, except as provided under paragraphs (d) and (e)(2) of this section.

(1) In the event such disqualification occurs, the refiner shall notify EPA in writing no later than 20 days following the disqualifying event.

(2) Disqualification under this paragraph (e) shall not apply in the case of a merger between two approved small refiners.

(f) If EPA finds that a refiner provided false or inaccurate information in its small refiner status verification letter under this subpart M, the refiner will be disqualified as a small refiner as of the effective date of this subpart.

(g) Any refiner that acquires a refinery from another refiner with approved small refiner status under paragraph (a) of this section shall notify EPA in writing no later than 20 days following the acquisition.

(h) *Extensions of the small refiner temporary exemption*—(1) A small refiner may apply for an extension of the temporary exemption of paragraph (c)(1) of this section based on a showing of all the following:

(i) Circumstances exist that impose disproportionate economic hardship on the refiner and significantly affects the refiner's ability to comply with the RFS standards.

(ii) The refiner has made best efforts to comply with the requirements of this subpart.

(2) A refiner must apply, and be approved, for small refiner status under this section.

(3) A small refiner's hardship application must include all the following information:

(i) A plan demonstrating how the refiner will comply with the requirements of § 80.1405 (and all other requirements of this subpart applicable to obligated parties), as expeditiously as possible.

(ii) A detailed description of the refinery configuration and operations including, at a minimum, all the following information:

(A) The refinery's total crude capacity.

(B) Total crude capacity of any other refineries owned by the same entity.

(C) Total volume of gasoline and diesel produced at the refinery.

(D) Detailed descriptions of efforts to comply.

(E) Bond rating of the entity that owns the refinery.

(F) Estimated investment needed to comply with the requirements of this subpart M.

(4) A small refiner shall notify EPA in writing of any changes to its situation between approval of the extension application and the end of its approved extension period.

(5) EPA may impose reasonable conditions on extensions of the temporary exemption, including reducing the length of such an extension, if conditions or situations change between approval of the application and the end of the approved extension period.

(i) Small refiner status verification letters, small refiner exemption waivers, or applications for extensions of the small refiner temporary exemption under this section must be sent to one of the following addresses:

(1) *For US Mail:* U.S. EPA, *Attn:* RFS Program, 6406J, 1200 Pennsylvania Avenue, NW., Washington, DC 20460.

(2) *For overnight or courier services:* U.S. EPA, *Attn:* RFS Program, 6406J, 1310 L Street, NW., 6th floor, Washington, DC 20005. (202) 343–9038.

[75 FR 14863, Mar. 26, 2010, as amended at 75 FR 26042, May 10, 2010]

§ 80.1443 What are the opt-in provisions for noncontiguous states and territories?

(a) Alaska or a United States territory may petition the Administrator to opt-in to the program requirements of this subpart.

(b) The Administrator will approve the petition if it meets the provisions of paragraphs (c) and (d) of this section.

(c) The petition must be signed by the Governor of the state or his authorized representative (or the equivalent official of the territory).

(d)(1) A petition submitted under this section must be received by EPA by November 1 for the state or territory to be included in the RFS program in the next calendar year.

(2) A petition submitted under this section should be sent to either of the following addresses:

(i) *For US Mail:* U.S. EPA, *Attn:* RFS Program, 6406J, 1200 Pennsylvania Avenue, NW., Washington, DC 20460.

(ii) *For overnight or courier services:* U.S. EPA, *Attn:* RFS Program, 6406J, 1310 L Street, NW., 6th floor, Washington, DC 20005. (202) 343–9038.

(e) Upon approval of the petition by the Administrator:

(1) EPA shall calculate the standards for the following year, including the total gasoline and diesel fuel volume for the state or territory in question.

(2) Beginning on January 1 of the next calendar year, all gasoline and diesel fuel refiners and importers in the state or territory for which a petition has been approved shall be obligated parties as defined in § 80.1406.

(3) Beginning on January 1 of the next calendar year, all renewable fuel producers in the state or territory for which a petition has been approved shall, pursuant to § 80.1426(a)(2), be required to generate RINs and comply with other requirements of this subpart M that are applicable to producers of renewable fuel.

§§ 80.1444–80.1448 [Reserved]

§ 80.1449 What are the Production Outlook Report requirements?

(a) A registered renewable fuel producer or importer, for each of its facilities, must submit all of the following information, as applicable, to EPA by March 31 of each year (September 1 for the report due in 2010):

(1) The type, or types, of renewable fuel expected to be produced or imported at each facility owned by the renewable fuel producer or importer.

(2) The volume of each type of renewable fuel expected to be produced or imported at each facility.

(3) The number of RINs expected to be generated by the renewable fuel producer or importer for each type of renewable fuel.

(4) Information about all the following:

(i) Existing and planned production capacity.

(ii) Long-range plans for expansion of production capacity at existing facilities or construction of new facilities.

(iii) Feedstocks and production processes to be used at each production facility.

(iv) Changes to the facility that would raise or lower emissions of any greenhouse gases from the facility.

(5) For expanded production capacity that is planned or underway at each existing facility, or new production facilities that are planned or underway, information on all the following, as available:

(i) Strategic planning.

(ii) Planning and front-end engineering.

(iii) Detailed engineering and permitting.

(iv) Procurement and construction.

(v) Commissioning and startup.

(6) Whether capital commitments have been made or are projected to be made.

(b) The information listed in paragraph (a) of this section shall include the reporting party's best estimates for the five following calendar years.

(c) Production outlook reports must provide an update of the progress in each of the areas listed in paragraph (a) of this section in comparison to information provided in previous year production outlook reports.

(d) Production outlook reports shall be sent to one of the following addresses:

(1) *For U.S. Mail:* U.S. EPA, *Attn:* RFS Program—Production Outlook Reports, 6406J, 1200 Pennsylvania Avenue, NW., Washington, DC 20460.

(2) *For overnight or courier services:* U.S. EPA, *Attn:* RFS Program—Production Outlook Reports, 6406J, 1310 L Street, NW., 6th floor, Washington, DC 20005; (202) 343–9038.

(e) All production outlook reports required under this section shall be submitted on forms and following procedures prescribed by the Administrator.

§ 80.1450 What are the registration requirements under the RFS program?

(a) *Obligated parties and exporters.* Any obligated party described in § 80.1406, and any exporter of renewable fuel described in § 80.1430, must provide EPA with the information specified for registration under § 80.76, if such information has not already been provided under the provisions of this part. An obligated party or an exporter of renewable fuel must receive EPA-issued identification numbers prior to engaging in any transaction involving RINs. Registration information may be submitted to EPA at any time after publication of this rule in the FEDERAL REGISTER, but must be submitted and accepted by EPA by July 1, 2010, or 60 days prior to RIN ownership, whichever date comes later.

(b) *Producers.* Any RIN-generating foreign or domestic producer of renewable fuel, any foreign renewable fuel producer that sells renewable fuel for RIN generation by a United States importer, or any foreign ethanol producer that produces ethanol used in renewable fuel for which RINs are generated by a United States importer, must provide EPA the information specified under § 80.76 if such information has not already been provided under the provisions of this part, and must receive EPA-issued company and facility identification numbers prior to the generation of any RINs for their fuel or for fuel made with their ethanol. Unless otherwise specifically indicated, all the following registration information must be submitted and accepted by EPA by July 1, 2010, or 60 days prior to the generation of RINs, whichever date comes later, subject to this subpart:

(1) A description of the types of renewable fuels or ethanol that the producer intends to produce at the facility and that the facility is capable of producing without significant modifications to the existing facility. For each type of renewable fuel or ethanol, the renewable fuel producer or foreign ethanol producer shall also provide all the following:

(i) A list of all the feedstocks the facility is capable of utilizing without significant modification to the existing facility.

(ii) A description of the facility's renewable fuel or ethanol production processes.

(iii) The type of co-products produced with each type of renewable fuel or ethanol.

(iv) A process heat fuel supply plan that includes all of the following:

(A) For all process heat fuel, provide all the following information:

(*1*) Each type of process heat fuel used at the facility.

(*2*) Name and address of the company supplying each process heat fuel to the

renewable fuel or foreign ethanol facility.

(B) For biogas used for process heat, provide all the following information:

(*1*) Locations from which the biogas was produced or extracted.

(*2*) Name of suppliers of all biogas the producer purchases for use for process heat in the facility.

(*3*) An affidavit from the biogas supplier stating its intent to supply biogas to the renewable fuel producer or foreign ethanol producer, and the quantity and energy content of the biogas that it intends to provide to the renewable fuel producer or foreign ethanol producer.

(v) The following records that support the facility's baseline volume as defined in § 80.1401 or, for foreign ethanol facilities, their production volume:

(A) For all facilities except those described in paragraph (b)(1)(v)(B) of this section, copies of the most recent applicable air permits issued by the U.S. Environmental Protection Agency, state, local air pollution control agencies, or foreign governmental agencies and that govern the construction and/or operation of the renewable fuel or foreign ethanol facility.

(B) For facilities claiming the exemption described in § 80.1403(c) or (d), applicable air permits issued by the U.S. Environmental Protection Agency, state, local air pollution control agencies, or foreign governmental agencies that govern the construction and/or operation of the renewable fuel facility that were:

(*1*) Issued or revised no later than December 19, 2007, for facilities described in § 80.1403(c); or

(*2*) Issued or revised no later than December 31, 2009, for facilities described in § 80.1403(d).

(C) For all facilities, copies of documents demonstrating each facility's actual peak capacity as defined in § 80.1401 if the maximum rated annual volume output of renewable fuel is not specified in the air permits specified in paragraphs (b)(1)(v)(A) and (b)(1)(v)(B) of this section, as appropriate.

(D) Such other records as may be requested by the Administrator.

(vi) For facilities claiming the exemption described in § 80.1403(c) or (d), evidence demonstrating the date that construction commenced (as defined in § 80.1403(a)(1)) including all of the following:

(A) Contracts with construction and other companies.

(B) Applicable air permits issued by the U.S. Environmental Protection Agency, state, local air pollution control agencies, or foreign governmental agencies that governed the construction and/or operation of the renewable fuel facility during construction and when first operated.

(vii)(A) For a producer of renewable fuel or a foreign producer of ethanol made from separated yard waste per § 80.1426(f)(5)(i)(A):

(*1*) The location of any municipal waste facility or other facility from which the waste stream consisting solely of separated yard waste is collected; and

(*2*) A plan documenting how the waste will be collected and how the renewable fuel producer or foreign ethanol producer will conduct ongoing verification that such waste consists only of yard waste (and incidental other components such as paper and plastics) that is kept separate since generation from other waste materials.

(B) For a producer of renewable fuel or a foreign producer of ethanol made from separated food waste per § 80.1426(f)(5)(i)(B):

(*1*) The location of any municipal waste facility or other facility from which the waste stream consisting solely of separated food waste is collected; and

(*2*) A plan documenting how the waste will be collected, how the cellulosic and non-cellulosic portions of the waste will be quantified, and for ongoing verification that such waste consists only of food waste (and incidental other components such as paper and plastics) that is kept separate since generation from other waste materials.

(viii) For a producer of renewable fuel, or a foreign producer of ethanol, made from separated municipal solid waste per § 80.1426(f)(5)(i)(C):

(A) The location of the municipal waste facility from which the separated municipal solid waste is collected or from which material is collected

that will be processed to produce separated municipal solid waste.

(B) A plan providing ongoing verification that there is separation of recyclable paper, cardboard, plastics, rubber, textiles, metals, and glass wastes to the extent reasonably practicable and which documents the following:

(*1*) Extent and nature of recycling that occurred prior to receipt of the waste material by the renewable fuel producer or foreign ethanol producer;

(*2*) Identification of available recycling technology and practices that are appropriate for removing recycling materials from the waste stream by the fuel producer or foreign ethanol producer; and

(*3*) Identification of the technology or practices selected for implementation by the fuel producer or foreign ethanol producer including an explanation for such selection, and reasons why other technologies or practices were not.

(C) Contracts relevant to materials recycled from municipal waste streams as described in § 80.1426(f)(5)(iii).

(D) Certification by the producer that recycling is conducted in a manner consistent with goals and requirements of applicable State and local laws relating to recycling and waste management.

(2) An independent third-party engineering review and written report and verification of the information provided pursuant to paragraph (b)(1) of this section. The report and verification shall be based upon a site visit and review of relevant documents and shall separately identify each item required by paragraph (b)(1) of this section, describe how the independent third-party evaluated the accuracy of the information provided, state whether the independent third-party agrees with the information provided, and identify any exceptions between the independent third-party's findings and the information provided.

(i) The verifications required under this section must be conducted by a professional engineer, as specified in paragraphs (b)(2)(i)(A) and (b)(2)(i)(B) of this section, who is an independent third-party. The verifying engineer must be:

(A) For a domestic renewable fuel production facility or a foreign ethanol production facility, a professional engineer who is licensed by an appropriate state agency in the United States, with professional work experience in the chemical engineering field or related to renewable fuel production.

(B) For a foreign renewable fuel production facility, an engineer who is a foreign equivalent to a professional engineer licensed in the United States with professional work experience in the chemical engineering field or related to renewable fuel production.

(ii) To be considered an independent third-party under this paragraph (b)(2):

(A) The third-party shall not be operated by the renewable fuel producer or foreign ethanol producer, or any subsidiary or employee of the renewable fuel producer or foreign ethanol producer.

(B) The third-party shall be free from any interest in the renewable fuel producer or foreign ethanol producer's business.

(C) The renewable fuel producer or foreign ethanol producer shall be free from any interest in the third-party's business.

(D) Use of a third-party that is debarred, suspended, or proposed for debarment pursuant to the Government-wide Debarment and Suspension regulations, 40 CFR part 32, or the Debarment, Suspension and Ineligibility provisions of the Federal Acquisition Regulations, 48 CFR, part 9, subpart 9.4, shall be deemed noncompliance with the requirements of this section.

(iii) The independent third-party shall retain all records pertaining to the verification required under this section for a period of five years from the date of creation and shall deliver such records to the Administrator upon request.

(iv) The renewable fuel producer or foreign ethanol producer must retain records of the review and verification, as required in § 80.1454(b)(6).

(v) The third-party must provide to EPA documentation of his or her qualifications as part of the engineering review, including proof of appropriate professional license or foreign equivalent.

(vi) Owners and operators of facilities described in § 80.1403(c) and (d) must submit the engineering review no later than December 31, 2010.

(c) *Importers*. Importers of renewable fuel must provide EPA the information specified under § 80.76, if such information has not already been provided under the provisions of this part and must receive an EPA-issued company identification number prior to generating or owning RINs. Registration information must be submitted and accepted by EPA by July 1, 2010, or 60 days prior to an importer importing any renewable fuel with assigned RINs or generating any RINs for renewable fuel, whichever dates comes later.

(d) *Registration updates*—(1) Any producer of renewable fuel who makes changes to his facility that will qualify his renewable fuel for a renewable fuel category or D code as defined in § 80.1425(g) that is not reflected in the producer's registration information on file with EPA must update his registration information and submit a copy of an updated independent engineering review at least 60 days prior to producing the new type of renewable fuel.

(2) Any producer of renewable fuel who makes any other changes to a facility that will affect the producer's registration information but will not affect the renewable fuel category for which the producer is registered per paragraph (b) of this section must update his registration information 7 days prior to the change.

(3) All producers of renewable fuel must update registration information and submit a copy of an updated independent engineering review every 3 years after initial registration. In addition to conducting the engineering review and written report and verification required by paragraph (b)(2) of this section, the updated independent engineering review shall include a detailed review of the renewable fuel producer's calculations used to determine V_{RIN} of a representative sample of batches of each type of renewable fuel produced since the last registration. The representative sample shall be selected in accordance with the sample size guidelines set forth at § 80.127.

(e) Any party who owns RINs, intends to own RINs, or intends to allow another party to separate RINs as per § 80.1440, but who is not covered by paragraph (a), (b), or (c) of this section, must provide EPA the information specified under § 80.76, if such information has not already been provided under the provisions of this part and must receive an EPA-issued company identification number prior to owning any RINs. Registration information must be submitted at least 30 days prior to RIN ownership.

(f) Registration for any facility claiming an exemption under § 80.1403(c) or (d), must be submitted by July 1, 2013. EPA may in its sole discretion waive this requirement if it determines that the information submitted in any later registration can be verified by EPA in the same manner as would have been possible with a timely submission.

(g) Registration shall be on forms, and following policies, established by the Administrator.

[75 FR 14863, Mar. 26, 2010, as amended at 75 FR 26043, May 10, 2010]

§ 80.1451 What are the reporting requirements under the RFS program?

(a) *Obligated parties and exporters*. Any obligated party described in § 80.1406 or exporter of renewable fuel described in § 80.1430 must submit to EPA reports according to the schedule, and containing all the information, that is set forth in this paragraph (a).

(1) Annual compliance reports for the previous compliance period shall be submitted by February 28 of each year and shall include all of the following information:

(i) The obligated party's or exporter's name.

(ii) The EPA company registration number.

(iii) Whether the domestic refiner, as defined in § 80.1406, is complying on a corporate (aggregate) or facility-by-facility basis.

(iv) The EPA facility registration number, if complying on a facility-by-facility basis.

(v) The production volume and import volume of all of the products listed in § 80.1407(c) and (e) for the reporting year.

(vi) The RVOs, as defined in § 80.1427(a) for obligated parties and § 80.1430(b) for exporters of renewable fuel, for the reporting year.

(vii) Any deficit RVOs carried over from the previous year.

(viii) The total current-year RINs by category of renewable fuel, as those fuels are defined in § 80.1401 (i.e., cellulosic biofuel, biomass-based diesel, advanced biofuel, renewable fuel, and cellulosic diesel), retired for compliance.

(ix) The total prior-year RINs by renewable fuel category, as those fuels are defined in § 80.1401, retired for compliance.

(x) The total cellulosic biofuel waiver credits used to meet the party's cellulosic biofuel RVO.

(xi) A list of all RINs retired for compliance in the reporting period.

(xii) Any deficit RVO(s) carried into the subsequent year.

(xiii) Any additional information that the Administrator may require.

(2) The RIN transaction reports required under paragraph (c)(1) of this section.

(3) The quarterly RIN activity reports required under paragraph (c)(2) of this section.

(4) Reports required under this paragraph (a) must be signed and certified as meeting all the applicable requirements of this subpart by the owner or a responsible corporate officer of the obligated party or exporter.

(b) *Renewable fuel producers (domestic and foreign) and importers.* Any domestic producer or importer of renewable fuel who generates RINs, or foreign renewable fuel producer who generates RINs, must submit to EPA reports according to the schedule, and containing all the information, that is set forth in this paragraph (b).

(1)(i) For RINs generated beginning on July 1, 2010, RIN generation reports for each facility owned by the renewable fuel producer or importer shall be submitted according to the schedule specified in paragraph (f)(2) of this section.

(ii) The RIN generation reports shall include all the following information for each batch of renewable fuel produced or imported, where ''batch'' means a discrete quantity of renewable fuel produced or imported and assigned a unique batch-RIN per § 80.1426(d):

(A) The RIN generator's name.

(B) The RIN generator's EPA company registration number.

(C) The renewable fuel producer EPA facility registration number.

(D) The importer EPA facility registration number and foreign renewable producer company registration number, if applicable.

(E) The applicable reporting period.

(F) The quantity of RINs generated for each batch according to § 80.1426.

(G) The production date of each batch.

(H) The fuel type of each batch.

(I) The volume of denaturant and applicable equivalence value of each batch.

(J) The volume of each batch produced.

(K) The types and quantities of feedstocks used.

(L) The process(es) and feedstock(s) used and proportion of renewable volume attributable to each process and feedstock.

(M) The type of co-products produced with each batch of renewable fuel.

(N) The quantity of co-products produced in each quarter.

(O) A list of the RINs generated and an affirmation that the feedstock(s) used for each batch meets the definition of renewable biomass as defined in § 80.1401.

(P) Producers of renewable electricity and producers or importers of biogas used for transportation as described in § 80.1426(f)(10) and (11), shall report all of the following:

(*1*) The total energy produced and supplied for use as a transportation fuel, in units of energy (for example, MMBtu or MW) based on metering of gas volume or electricity.

(*2*) The name and location of where the fuel is sold for use as a transportation fuel.

(Q) Producers or importers of renewable fuel produced at facilities that use biogas for process heat as described in

§80.1426(f)(12), shall report the total energy supplied to the renewable fuel facility, in MMBtu based on metering of gas volume.

(R) Producers or importers of renewable fuel made from separated municipal solid waste as described in §80.1426(f)(5)(i)(C), shall report the amount of paper, cardboard, plastics, rubber, textiles, metals, and glass separated from municipal solid waste for recycling. Reporting shall be in units of weight (in tons).

(S) Any additional information the Administrator may require.

(2) The RIN transaction reports required under paragraph (c)(1) of this section.

(3) The RIN activity reports required under paragraph (c)(2) of this section.

(4) Reports required under this paragraph (b) must be signed and certified as meeting all the applicable requirements of this subpart by the owner or a responsible corporate officer of the renewable fuel producer or importer.

(c) *All RIN-owning parties.* Any party, including any party specified in paragraphs (a) and (b) of this section, that owns RINs during a reporting period, must submit reports to EPA according to the schedule, and containing all the information, that is set forth in this paragraph (c).

(1)(i) For RIN transactions beginning on July 1, 2010, RIN transaction reports listing each RIN transaction shall be submitted according to the schedule in paragraph (f)(2) of this section.

(ii) As per §80.1452, RIN transaction information listing each RIN transaction shall be submitted to the EMTS.

(iii) Each report required by paragraph (c)(1)(i) of this section shall include all of the following information:

(A) The submitting party's name.

(B) The submitting party's EPA company registration number.

(C) The applicable reporting period.

(D) Transaction type (i.e., RIN buy, RIN sell, RIN separation, RIN retire, reinstated 2009 or 2010 RINs).

(E) Transaction date.

(F) For a RIN purchase or sale, the trading partner's name.

(G) For a RIN purchase or sale, the trading partner's EPA company registration number. For all other transactions, the submitting party's EPA company registration number.

(H) RIN subject to the transaction.

(I) For a RIN purchase or sale, the per gallon RIN price and/or the per gallon price of renewable fuel price with RINs included.

(J) The reason code for retiring RINs, separating RINs, buying RINs, or selling RINs.

(K) Any additional information that the Administrator may require.

(2) RIN activity reports shall be submitted to EPA according to the schedule specified in paragraph (f)(2) of this section. Each report shall summarize RIN activities for the reporting period, separately for RINs separated from a renewable fuel volume and RINs assigned to a renewable fuel volume. The quarterly RIN activity reports shall include all of the following information:

(i) The submitting party's name.

(ii) The submitting party's EPA company registration number.

(iii) The number of current-year RINs owned at the start of the quarter.

(iv) The number of prior-year RINs owned at the start of the quarter.

(v) The total current-year RINs purchased.

(vi) The total prior-year RINs purchased.

(vii) The total current-year RINs sold.

(viii) The total prior-year RINs sold.

(ix) The total current-year RINs retired.

(x) The total prior-year RINs retired.

(xi) The number of current-year RINs owned at the end of the quarter.

(xii) The number of prior-year RINs owned at the end of the quarter.

(xiii) The number of RINs generated.

(xiv) The volume of renewable fuel (in gallons) owned at the end of the quarter.

(xv) The total 2009 and 2010 retired RINs reinstated.

(xvi) Any additional information that the Administrator may require.

(3) All reports required under this paragraph (c) must be signed and certified as meeting all the applicable requirements of this subpart by the RIN owner or a responsible corporate officer of the RIN owner.

(d) Except for those producers using feedstocks subject to the aggregate

compliance approach described in § 80.1454(g), producers and RIN-generating importers of renewable fuel made from feedstocks that are planted crops and crop residue from existing foreign agricultural land, planted trees or tree residue from actively managed tree plantations, slash and pre-commercial thinnings from forestlands or biomass obtained from areas at risk of wildfire must submit quarterly reports according to the schedule in paragraph (f)(2) of this section that include all of the following:

(1) A summary of the types and quantities of feedstocks used in that quarter.

(2) Electronic data identifying the land by coordinates of the points defining the boundaries from which each type of feedstock listed per paragraph (d)(1) of this section was harvested.

(3) If electronic data identifying a plot of land have been submitted previously, producers and RIN-generating importers may submit a cross-reference to that electronic data.

(e) If EPA finds that the 2007 baseline amount of agricultural land has been exceeded in any year beginning in 2010, beginning on the first day of July of the following calendar year any producers or importers of renewable fuel as defined in § 80.1401 who use planted crops and/or crop residue from existing U.S. agricultural lands as feedstock must submit quarterly reports according to the schedule in paragraph (f)(2) of this section that include all of the following:

(1) A summary of the types and quantities of feedstocks used in that quarter.

(2) Electronic data identifying the land by coordinates of the points defining the boundaries from which each type of feedstock listed per paragraph (d)(1) of this section was harvested.

(3) If electronic data identifying a plot of land have been submitted previously, producers and RIN-generating importers may submit a cross-reference to that electronic data.

(f) *Quarterly report submission deadlines.* The submission deadlines for quarterly reports shall be as follows:

(1) [Reserved.]

(2) Quarterly reports shall be submitted to EPA by the last day of the second month following the reporting period (i.e., the report covering January–March would be due by May 31st, the report covering April–June would be due by August 31st, the report covering July–September would be due by November 30th and the report covering October–December would be due by February 28th). Any reports generated by EMTS must be reviewed, supplemented, and/or corrected if not complete and accurate, and verified by the owner or responsible corporate office prior to submittal.

(3) Reports required must be signed and certified as meeting all the applicable requirements of this subpart by the owner or a responsible corporate officer of the submitter.

(g) All reports required under this section shall be submitted on forms and following procedures prescribed by the Administrator.

[75 FR 14863, Mar. 26, 2010, as amended at 75 FR 26044, May 10, 2010]

EDITORIAL NOTE: At 75 FR 26044, May 10, 2010, § 80.1451 was amended by revising paragraph (b)(1)(ii)(M); however, the amendment could not be incorporated due to an omission of amendatory instruction.

§ 80.1452 What are the requirements related to the EPA Moderated Transaction System (EMTS)?

(a) Each party required to submit information under this section must establish an account with the EPA Moderated Transaction System (EMTS) at least 60 days prior to engaging in any RIN transactions, or July 1, 2010, whichever is later.

(b) Starting July 1, 2010, each time a domestic producer or importer of renewable fuel, or foreign renewable fuel producer who generates RINs, produces or imports a batch of renewable fuel, all the following information must be submitted to EPA via the submitting party's EMTS account within five (5) business days:

(1) The renewable fuel producer's, foreign renewable fuel producer's, or importer's name.

(2) The renewable fuel producer's or foreign renewable fuel producer's EPA company registration number.

(3) The importer's EPA company registration number if applicable.

(4) The renewable fuel producer's or foreign renewable fuel producer's EPA facility registration number.

(5) The importer's EPA facility registration number.

(6) The RIN type (i.e., D code) of the batch.

(7) The production process(es) used for the batch.

(8) The production date of the batch.

(9) The category of renewable fuel of the batch, as defined in § 80.1401.

(10) The volume of the batch.

(11) The volume of denaturant and applicable equivalence value of each batch.

(12) Quantity of RINs generated for the batch.

(13) The type and volume of feedstock(s) used for the batch.

(14) An affirmation that the feedstock(s) used for each batch meets the definition of renewable biomass as defined in § 80.1401.

(15) The type of co-products produced with the batch of renewable fuel.

(16) Any additional information the Administrator may require.

(c) Starting July 1, 2010, each time any party engages in a transaction involving RINs, all the following information must be submitted to EPA via the submitting party's EMTS account within five (5) business days:

(1) The submitting party's name.

(2) The submitting party's EPA company registration number.

(3) The generation year of the RINs.

(4) The RIN assignment information (Assigned or Separated).

(5) The RIN type, or D code.

(6) Transaction type (i.e., RIN buy, RIN sell, RIN separation, RIN retire).

(7) Transaction date as per § 80.1453(a)(4).

(8) For a RIN purchase or sale, the trading partner's name.

(9) For a RIN purchase or sale, the trading partner's EPA company registration number.

(10) For an assigned RIN purchase or sale, the renewable fuel volume associated with the sale.

(11) Quantity of RINs involved in a transaction.

(12) The per gallon RIN price or the per-gallon price of renewable fuel with RINs included.

(13) The reason for retiring RINs, separating RINs, buying RINs, or selling RINs.

(14) Any additional information that the Administrator may require.

(d) All information required under this section shall be submitted on forms and following procedures prescribed by the Administrator.

§ 80.1453 What are the product transfer document (PTD) requirements for the RFS program?

(a) On each occasion when any party transfers ownership of renewable fuels or separated RINs subject to this subpart, the transferor must provide to the transferee documents identifying the renewable fuel and any RINs (whether assigned or separated) which include all of the following information, as applicable:

(1) The name and address of the transferor and transferee.

(2) The transferor's and transferee's EPA company registration numbers.

(3) The volume of renewable fuel that is being transferred, if any.

(4) The date of the transfer.

(5) [Reserved]

(6) The quantity of RINs being traded.

(7) The D code of the RINs.

(8) The RIN status (Assigned or Separated).

(9) The RIN generation year.

(10) The associated reason for the sell or buy transaction (e.g., standard trade or remedial action).

(11) Additional RIN-related information, as follows:

(i) If assigned RINs are being transferred on the same PTD used to transfer ownership of the renewable fuel, then the assigned RIN information shall be identified on the PTD.

(A) The identifying information for a RIN that is transferred in EMTS generically is the information specified in paragraphs (a)(1) through (a)(10) of this section.

(B) The identifying information for a RIN that is transferred in EMTS uniquely is the information specified in paragraphs (a)(1) through (a)(10) of this section, the RIN generator company ID, the RIN generator facility ID, and the batch number.

(C) The identifying information for a RIN that is generated prior to July 1, 2010, is the 38-digit code pursuant to § 80.1425, in its entirety.

(ii) If assigned RINs are being transferred on a separate PTD from that which is used to transfer ownership of the renewable fuel, then the PTD which is used to transfer ownership of the renewable fuel shall include all the following:

(A) The number of gallon-RINs being transferred.

(B) A unique reference to the PTD which is transferring the assigned RINs.

(C) The information specified in paragraphs (a)(11)(i)(A) through (a)(11)(i)(C) of this section, as appropriate.

(iii) If no assigned RINs are being transferred with the renewable fuel, the PTD which is used to transfer ownership of the renewable fuel shall state ''No assigned RINs transferred.''.

(iv) If RINs have been separated from the renewable fuel or fuel blend pursuant to § 80.1429(b)(4), then all PTDs which are at any time used to transfer ownership of the renewable fuel or fuel blend shall state ''This volume of fuel must be used in the designated form, without further blending.''.

(b) Except for transfers to truck carriers, retailers, or wholesale purchaser-consumers, product codes may be used to convey the information required under paragraphs (a)(1) through (a)(11) of this section if such codes are clearly understood by each transferee.

(c) For renewable fuel, other than ethanol, that is not registered as motor vehicle fuel under 40 CFR Part 79, the PTD which is used to transfer ownership of the renewable fuel shall state ''This volume of renewable fuel may not be used as a motor vehicle fuel.''

[75 FR 14863, Mar.26, 2010, as amended at 75 FR 26045, May 10, 2010]

§ 80.1454 What are the recordkeeping requirements under the RFS program?

(a) *Requirements for obligated parties and exporters*. Beginning July 1, 2010, any obligated party (as described at § 80.1406) or exporter of renewable fuel (as described at § 80.1401) must keep all of the following records:

(1) Product transfer documents consistent with § 80.1453 and associated with the obligated party's or exporter's activity, if any, as transferor or transferee of renewable fuel or separated RINs.

(2) Copies of all reports submitted to EPA under § 80.1451(a), as applicable.

(3) Records related to each RIN transaction, including all of the following:

(i) A list of the RINs owned, purchased, sold, separated, retired, or reinstated.

(ii) The parties involved in each RIN transaction including the transferor, transferee, and any broker or agent.

(iii) The date of the transfer of the RIN(s).

(iv) Additional information, including contracts, correspondence, and invoices, related to details of the RIN transaction and its terms.

(4) Records related to the use of RINs (by facility, if applicable) for compliance, including all of the following:

(i) Methods and variables used to calculate the Renewable Volume Obligations pursuant to § 80.1407 or § 80.1430.

(ii) List of RINs used to demonstrate compliance.

(iii) Additional information related to details of RIN use for compliance.

(5) Records related to the separation of assigned RINs from renewable fuel volume.

(6) For exported renewable fuel, invoices, bills of lading and other documents describing the exported renewable fuel.

(b) *Requirements for all producers of renewable fuel*. Beginning July 1, 2010, any domestic or RIN-generating foreign producer of a renewable fuel as defined in § 80.1401 must keep all of the following records in addition to those required under paragraphs (c) or (d) of this section:

(1) Product transfer documents consistent with § 80.1453 and associated with the renewable fuel producer's activity, if any, as transferor or transferee of renewable fuel or separated RINs.

(2) Copies of all reports submitted to EPA under §§ 80.1449 and 80.1451(b).

(3) Records related to the generation and assignment of RINs for each facility, including all of the following:

(i) Batch volume in gallons.

(ii) Batch number.

(iii) RIN as assigned under § 80.1426, if applicable.

(iv) Identification of batches by renewable category.

(v) Type and quantity of co-products produced.

(vi) Type and quantity of feedstocks used.

(vii) Type and quantity of fuel used for process heat.

(viii) Feedstock energy calculations per § 80.1426(f)(4).

(ix) Date of production.

(x) Results of any laboratory analysis of batch chemical composition or physical properties.

(xi) All commercial documents and additional information related to details of RIN generation.

(4) Records related to each RIN transaction, separately for each transaction, including all of the following:

(i) A list of the RINs owned, purchased, sold, retired, or reinstated.

(ii) The parties involved in each transaction including the transferor, transferee, and any broker or agent.

(iii) The date of the transfer of the RIN(s).

(iv) Additional information related to details of the transaction and its terms.

(5) Records related to the production, importation, ownership, sale or use of any volume of renewable fuel for which RINs were generated or blend of renewable fuel for which RINs were generated and gasoline or diesel fuel that any party designates for use as transportation fuel, jet fuel, or heating oil and the use of the fuel or blend as transportation fuel, jet fuel, or heating oil without further blending, in the designated form.

(6) Copies of registration documents required under § 80.1450, including information on fuels and products, feedstocks, facility production processes, process changes, and capacity, energy sources, and a copy of the independent third party engineering review submitted to EPA per § 80.1450(b)(2).

(c) *Additional requirements for imports of renewable fuel.*

(1) Beginning July 1, 2010, any RIN-generating foreign producer of a renewable fuel or RIN-generating importer must keep records of feedstock purchases and transfers associated with renewable fuel for which RINs are generated, sufficient to verify that feedstocks used are renewable biomass (as defined in § 80.1401).

(i) RIN-generating foreign producers and importers of renewable fuel made from feedstocks that are planted crops or crop residue from existing foreign agricultural land, planted trees or tree residue from actively managed tree plantations, slash and pre-commercial thinnings from forestlands or biomass obtained from wildland-urban interface must maintain all the following records to verify the location where these feedstocks were produced:

(A) Maps or electronic data identifying the boundaries of the land where each type of feedstock was produced.

(B) Bills of lading, product transfer documents, or other commercial documents showing the quantity of feedstock purchased from each area identified in paragraph (c)(1)(i)(A) of this section, and showing each transfer of custody of the feedstock from the location where it was produced to the renewable fuel production facility.

(ii)(A) RIN-generating foreign producers and importers of renewable fuel made from planted crops or crop residue from existing foreign agricultural land must keep records that serve as evidence that the land from which the feedstock was obtained was cleared or cultivated prior to December 19, 2007 and actively managed or fallow, and nonforested on December 19, 2007. RIN-generating foreign producers or importers of renewable fuel made from planted trees or tree residue from actively managed tree plantations must keep records that serve as evidence that the land from which the feedstock was obtained was cleared prior to December 19, 2007 and actively managed on December 19, 2007.

(B) The records must be provided by the feedstock producer, traceable to the land in question, and consist of at least one of the following documents:

(*1*) Sales records for planted crops or trees, crop or tree residue, or livestock; purchasing records for fertilizer, weed control, or reseeding, including seeds, seedlings, or other nursery stock.

(*2*) A written management plan for agricultural or silvicultural purposes; documentation of participation in an agricultural or silvicultural program sponsored by a Federal, state, or local government agency.

(*3*) Documentation of land management in accordance with an agricultural or silvicultural product certification program, an agreement for land management consultation with a professional forester that identifies the land in question.

(*4*) Evidence of the existence and ongoing maintenance of a road system or other physical infrastructure designed and maintained for logging use, together with one of the aforementioned documents in this paragraph (c)(1)(ii)(B).

(iii) RIN-generating foreign producers and importers of renewable fuel made from any other type of renewable biomass must have documents from their feedstock supplier certifying that the feedstock qualifies as renewable biomass as defined in § 80.1401, describing the feedstock and identifying the process that was used to generate the feedstock.

(2) Beginning July 1, 2010, any RIN-generating importer of renewable fuel (as defined in § 80.1401) must keep all of the following records:

(i) Product transfer documents consistent with § 80.1453 and associated with the renewable fuel importer's activity, if any, as transferor or transferee of renewable fuel.

(ii) Copies of all reports submitted to EPA under §§ 80.1449 and 80.1451(b).

(iii) Records related to the generation and assignment of RINs for each facility, including all of the following:

(A) Batch volume in gallons.

(B) Batch number.

(C) RIN as assigned under § 80.1426.

(D) Identification of batches by renewable category.

(E) Type and quantity of feedstocks used.

(F) Type and quantity of fuel used for process heat.

(G) Date of import.

(H) Results of any laboratory analysis of batch chemical composition or physical properties.

(I) The EPA registration number of the foreign renewable fuel producers producing the fuel.

(J) Additional information related to details of RIN generation.

(iv) Records related to each RIN transaction, including all of the following:

(A) A list of the RINs owned, purchased, sold, separated, retired, or reinstated.

(B) The parties involved in each transaction including the transferor, transferee, and any broker or agent.

(C) The date of the transfer of the RIN(s).

(D) Additional information related to details of the transaction and its terms.

(v) Copies of registration documents required under § 80.1450.

(vi) Records related to the import of any volume of renewable fuel that the importer designates for use as transportation fuel, jet fuel, or heating oil.

(d) *Additional requirements for domestic producers of renewable fuel.* Except as provided in paragraphs (g) and (h) of this section, beginning July 1, 2010, any domestic producer of renewable fuel as defined in § 80.1401 that generates RINs for such fuel must keep documents associated with feedstock purchases and transfers that identify where the feedstocks were produced and are sufficient to verify that feedstocks used are renewable biomass (as defined in § 80.1401) if RINs are generated.

(1) Domestic producers of renewable fuel made from feedstocks that are planted trees or tree residue from actively managed tree plantations, slash and pre-commercial thinnings from forestlands or biomass obtained from areas at risk of wildfire must maintain all the following records to verify the location where these feedstocks were produced:

(i) Maps or electronic data identifying the boundaries of the land where each type of feedstock was produced.

(ii) Bills of lading, product transfer documents or other commercial documents showing the quantity of feedstock purchased from each area identified in paragraph (d)(1)(i) of this section, and showing each transfer of custody of the feedstock from the location

where it was produced to the renewable fuel production facility.

(2) Domestic producers of renewable fuel made from planted trees or tree residue from actively managed tree plantations must keep records that serve as evidence that the land from which the feedstock was obtained was cleared prior to December 19, 2007 and actively managed on December 19, 2007. The records must be provided by the feedstock producer and must include at least one of the following documents, which must be traceable to the land in question:

(i) Sales records for planted trees or tree residue.

(ii) Purchasing records for fertilizer, weed control, or reseeding, including seeds, seedlings, or other nursery stock.

(iii) A written management plan for silvicultural purposes.

(iv) Documentation of participation in a silvicultural program sponsored by a Federal, state, or local government agency.

(v) Documentation of land management in accordance with a silvicultural product certification program, an agreement for land management consultation with a professional forester.

(vi) Evidence of the existence and ongoing maintenance of a road system or other physical infrastructure designed and maintained for logging use, together with one of the aforementioned documents.

(3) Domestic producers of renewable fuel made from planted crops or crop residue from existing foreign agricultural land must keep all the following records:

(i) Records that serve as evidence that the land from which the feedstock was obtained was cleared or cultivated prior to December 19, 2007 and actively managed or fallow, and nonforested on December 19, 2007. The records must be provided by the feedstock producer and must include at least one of the following documents, which must be traceable to the land in question:

(A) Sales records for planted crops, crop residue, or livestock.

(B) Purchasing records for fertilizer, weed control, seeds, seedlings, or other nursery stock.

(C) A written management plan for agricultural purposes.

(D) Documentation of participation in an agricultural program sponsored by a Federal, State, or local government agency.

(E) Documentation of land management in accordance with an agricultural product certification program.

(ii) Records to verify the location where the feedstocks were produced:

(A) Maps or electronic data identifying the boundaries of the land where each type of feedstock was produced; and

(B) Bills of lading, product transfer documents or other commercial documents showing the quantity of feedstock purchased from each area identified in paragraph (d)(3)(ii)(A) of this section, and showing each transfer of custody of the feedstock from the location where it was produced to the renewable fuel facility.

(4) Domestic producers of renewable fuel made from any other type of renewable biomass must have documents from their feedstock supplier certifying that the feedstock qualifies as renewable biomass as defined in §80.1401, describing the feedstock. Separated yard and food waste and separated municipal solid waste are subject to the requirements in paragraph (j) of this section.

(e) *Additional requirements for producers of fuel exempt from the 20% GHG reduction requirement*. Beginning July 1, 2010, any production facility with a baseline volume of fuel that is not subject to the 20% GHG threshold, pursuant to §80.1403(c) and (d), must keep all of the following:

(1) Detailed engineering plans for the facility.

(2) Federal, State, and local (or foreign governmental) preconstruction approvals and permitting.

(3) Procurement and construction contracts and agreements.

(f) *Requirements for other parties that own RINs*. Beginning July 1, 2010, any party, other than those parties covered in paragraphs (a) and (b) of this section, that owns RINs must keep all of the following records:

(1) Product transfer documents consistent with §80.1453 and associated with the party's activity, if any, as

transferor or transferee of renewable fuel or separated RINs.

(2) Copies of all reports submitted to EPA under § 80.1451(c).

(3) Records related to each RIN transaction by renewable fuel category, including all of the following:

(i) A list of the RINs owned, purchased, sold, retired, or reinstated.

(ii) The parties involved in each RIN transaction including the transferor, transferee, and any broker or agent.

(iii) The date of the transfer of the RIN(s).

(iv) Additional information related to details of the transaction and its terms.

(4) Records related to any volume of renewable fuel that the party designated for use as transportation fuel, jet fuel, or heating oil and from which RINs were separated pursuant to § 80.1429(b)(4).

(g) *Aggregate compliance with renewable biomass requirement.* Any producer or RIN-generating importer of renewable fuel made from planted crops or crop residue from existing U.S. agricultural land as defined in § 80.1401 is subject to the aggregate compliance approach and is not required to maintain feedstock records unless EPA publishes a finding that the 2007 baseline amount of agricultural land has been exceeded.

(1) EPA will make a finding concerning whether the 2007 baseline amount of U.S. agricultural land has been exceeded and will publish this finding in the FEDERAL REGISTER by November 30 of the year preceding the compliance period.

(2) If EPA finds that the 2007 baseline amount of U.S. agricultural land has been exceeded, beginning on the first day of July of the compliance period in question any producer or RIN-generating importer of renewable fuel made from planted crops and/or crop residue from U.S. agricultural lands as feedstock for renewable fuel for which RINs are generated must keep all the following records:

(i) Records that serve as evidence that the land from which the feedstock was obtained was cleared or cultivated prior to December 19, 2007 and actively managed or fallow, and nonforested on December 19, 2007. The records must be provided by the feedstock producer and must include at least one of the following documents, which must be traceable to the land in question:

(A) Sales records for planted crops, crop residue or livestock.

(B) Purchasing records for fertilizer, weed control, seeds, seedlings, or other nursery stock.

(C) A written management plan for agricultural purposes.

(D) Documentation of participation in an agricultural program sponsored by a Federal, state, or local government agency.

(E) Documentation of land management in accordance with an agricultural product certification program.

(ii) Records to verify the location where the feedstocks were produced:

(A) Maps or electronic data identifying the boundaries of the land where each type of feedstock was produced; and

(B) Bills of lading, product transfer documents or other commercial documents showing the quantity of feedstock purchased from each area identified in paragraph (g)(2)(ii)(A) of this section, and showing each transfer of custody of the feedstock from the location where it was produced to the renewable fuel facility.

(h) *Alternative renewable biomass tracking requirement.* Any foreign or domestic renewable fuel producer or RIN-generating importer may comply with the following alternative renewable biomass tracking requirement instead of the recordkeeping requirements in paragraphs (c)(1), (d), and (g) of this section:

(1) To comply with the alternative renewable biomass tracking requirement under this paragraph (h), a renewable fuel producer or importer must either arrange to have an independent third party conduct a comprehensive program of annual compliance surveys, or participate in the funding of an organization which arranged to have an independent third party conduct a comprehensive program of annual compliance surveys, to be carried out in accordance with a survey plan which has been approved by EPA.

(2) The annual compliance surveys under this paragraph (h) must be all the following:

(i) Planned and conducted by an independent surveyor that meets the requirements in § 80.68(c)(13)(i).

(ii) Conducted at renewable fuel production and import facilities and their feedstock suppliers.

(iii) Representative of all renewable fuel producers and importers in the survey area and representative of their feedstock suppliers.

(iv) Designed to achieve at least the same level of quality assurance required in paragraphs (c)(1), (d) and (g) of this section.

(3) The compliance survey program shall require the independent surveyor conducting the surveys to do all the following:

(i) Conduct feedstock audits of renewable fuel production and import facilities in accordance with the survey plan approved under this paragraph (h), or immediately notify EPA of any refusal of these facilities to allow an audit to be conducted.

(ii) Obtain the records and product transfer documents associated with the feedstocks being audited.

(iii) Determine the feedstock supplier(s) that supplied the feedstocks to the renewable fuel producer.

(iv) Confirm that feedstocks used to produce RIN-generating renewable fuels meet the definition of renewable biomass as defined in § 80.1401.

(v) Immediately notify EPA of any case where the feedstocks do not meet the definition of renewable biomass as defined in § 80.1401.

(vi) Immediately notify EPA of any instances where a renewable fuel producer, importer or feedstock supplier subject to review under the approved plan fails to cooperate in the manner described in this section.

(vii) Submit to EPA a report of each survey, within thirty days following the completion of each survey, such report to include all the following information:

(A) The identification of the person who conducted the survey.

(B) An attestation by the officer of the surveyor company that the survey was conducted in accordance with the survey plan and the survey results are accurate.

(C) Identification of the parties for whom the survey was conducted.

(D) Identification of the covered area surveyed.

(E) The dates on which the survey was conducted.

(F) The address of each facility at which the survey audit was conducted and the date of the audit.

(G) A description of the methodology used to select the locations for survey audits and the number of audits conducted.

(viii) Maintain all records relating to the survey audits conducted under this section (h) for a period of at least 5 years.

(ix) At any time permit any representative of EPA to monitor the conduct of the surveys, including observing audits, reviewing records, and analysis of the audit results.

(4) A survey plan under this paragraph (h) must include all the following:

(i) Identification of the parties for whom the survey is to be conducted.

(ii) Identification of the independent surveyor.

(iii) A methodology for determining all the following:

(A) When the audits will be conducted.

(B) The audit locations.

(C) The number of audits to be conducted during the annual compliance period.

(iv) Any other elements determined by EPA to be necessary to achieve the level of quality assurance required under paragraphs (c)(1), (d), and (g) of this section.

(5)(i) Each renewable fuel producer and importer who participates in the alternative renewable biomass tracking under this paragraph (h) must take all reasonable steps to ensure that each feedstock producer, aggregator, distributor, or supplier cooperates with this program by allowing the independent surveyor to audit their facility and by providing to the independent surveyor and/or EPA, upon request, copies of management plans, product transfer documents, and other records or information regarding the source of any feedstocks received.

(ii) Reasonable steps under paragraph (h)(5)(i) of this section must include, but typically should not be limited to: Contractual agreements with feedstock

producers, aggregators, distributors, and suppliers, which require them to cooperate with the independent surveyor and/or EPA in the manner described in paragraph (h)(5)(i) of this section.

(6) The procedure for obtaining EPA approval of a survey plan under this paragraph (h), and for revocation of any such approval, are as follows:

(i) A detailed survey plan which complies with the requirements of this paragraph (h) must be submitted to EPA, no later than September 1 of the year preceding the calendar year in which the surveys will be conducted.

(ii) The survey plan must be signed by a responsible corporate officer of the renewable fuel producer or importer, or responsible officer of the organization which arranges to have an independent surveyor conduct a program of renewable biomass compliance surveys, as applicable.

(iii) The survey plan must be sent to the following address: Director, Compliance and Innovative Strategies Division, U.S. Environmental Protection Agency, 1200 Pennsylvania Ave., NW. (6406J), Washington, DC 20460.

(iv) EPA will send a letter to the party submitting a survey plan under this section, either approving or disapproving the survey plan.

(v) EPA may revoke any approval of a survey plan under this section for cause, including an EPA determination that the approved survey plan had proved inadequate in practice or that it was not fully implemented.

(vi) The approving official for an alternative quality assurance program under this section is the Director of the Compliance and Innovative Strategies Division, Office of Transportation and Air Quality.

(vii) Any notifications required under this paragraph (h) must be directed to the officer designated in paragraph (h)(6)(vi) of this section.

(7)(i) No later than December 1 of the year preceding the year in which the surveys will be conducted, the contract with the independent surveyor shall be in effect, and an amount of money necessary to carry out the entire survey plan shall be paid to the independent surveyor or placed into an escrow account with instructions to the escrow agent to pay the money to the independent surveyor during the course of the conduct of the survey plan.

(ii) No later than December 15 of the year preceding the year in which the surveys will be conducted, EPA must receive a copy of the contract with the independent surveyor, proof that the money necessary to carry out the survey plan has either been paid to the independent surveyor or placed into an escrow account, and, if placed into an escrow account, a copy of the escrow agreement, to be sent to the official designated in paragraph (h)(6)(iii) of this section.

(8) A failure of any renewable fuel producers or importer to fulfill or cause to be fulfilled any of the requirements of this paragraph (h) will cause the option for such party to use the alternative quality assurance requirements under this paragraph (h) to be void *ab initio*.

(i) Beginning July 1, 2010, all parties must keep transaction information sent to EMTS in addition to other records required under this section.

(j) A renewable fuel producer that produces fuel from separated yard and food waste as described in § 80.1426(f)(5)(i)(A) and (B) and separated municipal solid waste as described in § 80.1426(f)(5)(i)(C) shall keep all the following additional records:

(1) For separated yard and food waste as described in § 80.1426(f)(5)(i)(A) and (B):

(i) Documents demonstrating the amounts, by weight, purchased of separated yard and food waste for use as a feedstock in producing renewable fuel.

(ii) Such other records as may be requested by the Administrator.

(2) For separated municipal solid waste as described in § 80.1426(f)(5)(i)(C):

(i) Contracts and documents memorializing the sale of paper, cardboard, plastics, rubber, textiles, metals, and glass separated from municipal solid waste for recycling.

(ii) Documents demonstrating the amounts by weight purchased of post-recycled separated yard and food waste for use as a feedstock in producing renewable fuel.

(iii) Documents demonstrating the fuel sampling methods used pursuant to § 80.1426(f)(9) and the results of all

fuel analyses to determine the non-fossil fraction of fuel made from separated municipal solid waste.

(iv) Such other records as may be requested by the Administrator.

(k) A renewable fuel producer that generates RINs for biogas or electricity produced from renewable biomass (renewable electricity) for fuels that are used for transportation pursuant to § 80.1426(f)(10) and (11), or that uses process heat from biogas to generate RINs for renewable fuel pursuant to § 80.1426(f)(12) shall keep all of the following additional records:

(1) Contracts and documents memorializing the sale of biogas or renewable electricity for use as transportation fuel relied upon in § 80.1426(f)(10), § 80.1426(f)(11), or for use of biogas for use as process heat to make renewable fuel as relied upon in § 80.1426(f)(12), and the transfer of title of the biogas or renewable electricity and all associated environmental attributes from the point of generation to the facility which sells or uses the fuel for transportation purposes.

(2) Documents demonstrating the volume and energy content of biogas, or kilowatts of renewable electricity, relied upon under § 80.1426(f)(10) that was delivered to the facility which sells or uses the fuel for transportation purposes.

(3) Documents demonstrating the volume and energy content of biogas, or kilowatts of renewable electricity, relied upon under § 80.1426(f)(11), or biogas relied upon under § 80.1426(f)(12), that was placed into the common carrier pipeline (for biogas) or transmission line (for renewable electricity).

(4) Documents demonstrating the volume and energy content of biogas, or kilowatts of renewable electricity, relied upon under § 80.1426(f)(12) at the point of distribution.

(5) Affidavits from the biogas or renewable electricity producer and all parties that held title to the biogas or renewable electricity confirming that title and environmental attributes of the biogas or renewable electricity relied upon under § 80.1426(f)(10) and (11) were used for transportation purposes only, and that the environmental attributes of the biogas relied upon under § 80.1426(f)(12) were used for process heat at the renewable fuel producer's facility, and for no other purpose. The renewable fuel producer shall create and/or obtain these affidavits at least once per calendar quarter.

(6) The biogas or renewable electricity producer's Compliance Certification required under Title V of the Clean Air Act.

(7) Such other records as may be requested by the Administrator.

(l) The records required under paragraphs (a) through (d) and (f) through (k) of this section and under § 80.1453 shall be kept for five years from the date they were created, except that records related to transactions involving RINs shall be kept for five years from the date of the RIN transaction.

(m) The records required under paragraph (e) of this section shall be kept through calendar year 2022.

(n) On request by EPA, the records required under this section and under § 80.1453 must be made available to the Administrator or the Administrator's authorized representative. For records that are electronically generated or maintained, the equipment or software necessary to read the records shall be made available; or, if requested by EPA, electronic records shall be converted to paper documents.

(o) The records required in paragraphs (b)(3) and (c)(1) of this section must be transferred with any renewable fuel sent to the importer of that renewable fuel by any foreign producer not generating RINs for his renewable fuel.

(p) Copies of all reports required under § 80.1464.

[75 FR 14863, Mar. 26, 2010, as amended at 75 FR 26046, May 10, 2010]

§ 80.1455 What are the small volume provisions for renewable fuel production facilities and importers?

(a) *Standard volume threshold.* Renewable fuel production facilities located within the United States that produce less than 10,000 gallons of renewable fuel each year, and importers who import less than 10,000 gallons of renewable fuel each year, are not subject to the requirements of § 80.1426(a) and (e) related to the generation and assignment of RINs to batches of renewable fuel. Except as stated in paragraph (b)

of this section, such production facilities and importers that do not generate and assign RINs to batches of renewable fuel are also exempt from all the following requirements of this subpart:

(1) The registration requirements of § 80.1450.

(2) The reporting requirements of § 80.1451.

(3) The EMTS requirements of § 80.1452.

(4) The recordkeeping requirements of § 80.1454.

(5) The attest engagement requirements of § 80.1464.

(6) The production outlook report requirements of § 80.1449.

(b)(1) Renewable fuel production facilities and importers who produce or import less than 10,000 gallons of renewable fuel each year and that generate and assign RINs to batches of renewable fuel are subject to the provisions of §§ 80.1426, 80.1449 through 80.1452, 80.1454, and 80.1464.

(2) Renewable fuel production facilities and importers who produce or import less than 10,000 gallons of renewable fuel each year but wish to own RINs will be subject to all requirements stated in paragraphs (a)(1) through (a)(6) and (b)(1) of this section, and all other applicable requirements of this subpart M.

(c) *Temporary volume threshold.* Renewable fuel production facilities located within the United States that produce less than 125,000 gallons of renewable fuel each year are not subject to the requirements of § 80.1426(a) and (e) related to the generation and assignment of RINs to batches of renewable fuel for up to three years, beginning with the calendar year in which the production facility produces its first gallon of renewable fuel. Except as stated in paragraph (d) of this section, such production facilities that do not generate and assign RINs to batches of renewable fuel are also exempt from all the following requirements of this subpart for a maximum of three years:

(1) The registration requirements of § 80.1450.

(2) The reporting requirements of § 80.1451.

(3) The EMTS requirements of § 80.1452.

(4) The recordkeeping requirements of § 80.1454.

(5) The attest engagement requirements of § 80.1464.

(6) The production outlook report requirements of § 80.1449.

(d)(1) Renewable fuel production facilities who produce less than 125,000 gallons of renewable fuel each year and that generate and assign RINs to batches of renewable fuel are subject to the provisions of §§ 80.1426, 80.1449 through 80.1452, 80.1454, and 80.1464.

(2) Renewable fuel production facilities who produce less than 125,000 gallons of renewable fuel each year but wish to own RINs will be subject to all requirements stated in paragraphs (c)(1) through (c)(6) and (d)(1) of this section, and all other applicable requirements of this subpart M.

[75 FR 14863, Mar. 26, 2010, as amended at 75 FR 26047, May 10, 2010]

§ 80.1456 What are the provisions for cellulosic biofuel waiver credits?

(a) If EPA reduces the applicable volume of cellulosic biofuel pursuant to section 211(o)(7)(D)(i) of the Clean Air Act (42 U.S.C. 7545(o)(7)(D)(i)) for any given compliance year, then EPA will provide cellulosic biofuel waiver credits for purchase for that compliance year.

(1) The price of these cellulosic biofuel waiver credits will be set by EPA on an annual basis in accordance with paragraph (d) of this section.

(2) The total cellulosic biofuel waiver credits available will be equal to the reduced cellulosic biofuel volume established by EPA for the compliance year.

(b) *Use of cellulosic biofuel waiver credits.*

(1) Cellulosic biofuel waiver credits are only valid for use in the compliance year that they are made available.

(2) Cellulosic biofuel waiver credits are nonrefundable.

(3) Cellulosic biofuel waiver credits are nontransferable.

(4) Cellulosic biofuel waiver credits may only be used for an obligated party's current year cellulosic biofuel RVO and not towards any prior year deficit cellulosic biofuel volume obligations.

(c) *Purchase of cellulosic biofuel waiver credits.*

(1) Only parties with an RVO for cellulosic biofuel may purchase cellulosic biofuel waiver credits.

(2) Cellulosic biofuel waiver credits shall be purchased from EPA at the time that a party submits its annual compliance report to EPA pursuant to § 80.1451(a)(1).

(3) Parties may not purchase more cellulosic biofuel waiver credits than their current year cellulosic biofuel RVO minus cellulosic biofuel RINs with a D code of 3 that they own.

(4) Cellulosic biofuel waiver credits may only be used to meet an obligated party's cellulosic biofuel RVO.

(d) *Setting the price of cellulosic biofuel waiver credits.*

(1) The price for cellulosic biofuel waiver credits shall be set equal to the greater of:

(i) $0.25 per cellulosic biofuel waiver credit, adjusted for inflation in comparison to calendar year 2008; or

(ii) $3.00 less the wholesale price of gasoline per cellulosic biofuel waiver credit, adjusted for inflation in comparison to calendar year 2008.

(2) The wholesale price of gasoline will be calculated by averaging the most recent twelve monthly values for U.S. Total Gasoline Bulk Sales (Price) by Refiners as provided by the Energy Information Administration that are available as of September 30 of the year preceding the compliance period.

(3) The inflation adjustment will be calculated by comparing the most recent Consumer Price Index for All Urban Consumers (CPI–U) for All Items expenditure category as provided by the Bureau of Labor Statistics that is available at the time EPA sets the cellulosic biofuel standard to the most recent comparable value reported after December 31, 2008. When EPA must set the price of cellulosic biofuel waiver credits for a compliance year, EPA will calculate the new amounts for paragraphs (d)(1)(i) and (ii) of this section for each year after 2008 and every month where data is available for the year preceding the compliance period at the time EPA sets the cellulosic biofuel standard.

(e) Cellulosic biofuel waiver credits under this section will only be able to be purchased on forms and following procedures prescribed by EPA.

§§ 80.1457–80.1459 [Reserved]

§ 80.1460 What acts are prohibited under the RFS program?

(a) *Renewable fuels producer or importer violation.* Except as provided in § 80.1455, no person shall produce or import a renewable fuel without complying with the requirements of § 80.1426 regarding the generation and assignment of RINs.

(b) *RIN generation and transfer violations.* No person shall do any of the following:

(1) Generate a RIN for a fuel that is not a renewable fuel, or for which the applicable renewable fuel volume was not produced.

(2) Create or transfer to any person a RIN that is invalid under § 80.1431.

(3) Transfer to any person a RIN that is not properly identified as required under § 80.1425.

(4) Transfer to any person a RIN with a K code of 1 without transferring an appropriate volume of renewable fuel to the same person on the same day.

(5) Introduce into commerce any renewable fuel produced from a feedstock or through a process that is not described in the person's registration information.

(c) *RIN use violations.* No person shall do any of the following:

(1) Fail to acquire sufficient RINs, or use invalid RINs, to meet the person's RVOs under § 80.1427.

(2) Use a validly generated RIN to meet the person's RVOs under § 80.1427, or separate and transfer a validly generated RIN, where the person using the RIN ultimately uses the renewable fuel volume associated with the RIN in an application other than for use as transportation fuel, jet fuel, or heating oil (as defined in § 80.1401).

(3) Use a validly generated RIN to meet the person's RVOs under § 80.1427, or separate and transfer a validly generated RIN, where the person ultimately uses the renewable fuel volume associated with the RIN in an application other than for use as transportation fuel, jet fuel, or heating oil (as defined in § 80.1401).

(d) *RIN retention violation*. No person shall retain RINs in violation of the requirements in § 80.1428(a)(5).

(e) *Causing a violation*. No person shall cause another person to commit an act in violation of any prohibited act under this section.

(f) *Failure to meet a requirement*. No person shall fail to meet any requirement that applies to that person under this subpart.

[75 FR 14863, Mar. 26, 2010, as amended at 75 FR 26047, May 10, 2010]

§ 80.1461 Who is liable for violations under the RFS program?

(a) *Liability for violations of prohibited acts*.

(1) Any person who violates a prohibition under § 80.1460(a) through (d) is liable for the violation of that prohibition.

(2) Any person who causes another person to violate a prohibition under § 80.1460(a) through (d) is liable for a violation of § 80.1460(e).

(b) *Liability for failure to meet other provisions of this subpart*.

(1) Any person who fails to meet a requirement of any provision of this subpart is liable for a violation of that provision.

(2) Any person who causes another person to fail to meet a requirement of any provision of this subpart is liable for causing a violation of that provision.

(c) *Parent corporation liability*. Any parent corporation is liable for any violation of this subpart that is committed by any of its subsidiaries.

(d) *Joint venture liability*. Each partner to a joint venture is jointly and severally liable for any violation of this subpart that is committed by the joint venture operation.

§ 80.1462 [Reserved]

§ 80.1463 What penalties apply under the RFS program?

(a) Any person who is liable for a violation under § 80.1461 is subject to a civil penalty as specified in sections 205 and 211(d) of the Clean Air Act, for every day of each such violation and the amount of economic benefit or savings resulting from each violation.

(b) Any person liable under § 80.1461(a) for a violation of § 80.1460(c) for failure to meet its RVOs, or § 80.1460(e) for causing another person to fail to meet their RVOs during any compliance period, is subject to a separate day of violation for each day in the compliance period.

(c) Any person liable under § 80.1461(b) for failure to meet, or causing a failure to meet, a requirement of any provision of this subpart is liable for a separate day of violation for each day such a requirement remains unfulfilled.

[75 FR 14863, Mar. 26, 2010, as amended at 75 FR 26047, May 10, 2010]

§ 80.1464 What are the attest engagement requirements under the RFS program?

The requirements regarding annual attest engagements in §§ 80.125 through 80.127, and 80.130, also apply to any attest engagement procedures required under this subpart M. In addition to any other applicable attest engagement procedures, such as the requirements in §§ 80.1465 and 80.1466, the following annual attest engagement procedures are required under this subpart.

(a) *Obligated parties and exporters*. The following attest procedures shall be completed for any obligated party as stated in § 80.1406(a) or exporter of renewable fuel:

(1) *Annual compliance demonstration report*.

(i) Obtain and read a copy of the annual compliance demonstration report required under § 80.1451(a)(1) which contains information regarding all the following:

(A) The obligated party's volume of all products listed in § 80.1407(c) and (e), or the exporter's volume of each category of exported renewable fuel identified in § 80.1430(b)(1) through (b)(4).

(B) RVOs.

(C) RINs used for compliance.

(ii) Obtain documentation of any volumes of renewable fuel used in products listed in § 80.1407(c) and (e) at the refinery or import facility or exported during the reporting year; compute and report as a finding the total volumes of renewable fuel represented in these documents.

(iii) For obligated parties, compare the volumes of products listed in § 80.1407(c) and (e) reported to EPA in the report required under § 80.1451(a)(1) with the volumes, excluding any renewable fuel volumes, contained in the inventory reconciliation analysis under § 80.133 and the volume of non-renewable diesel produced or imported. Verify that the volumes reported to EPA agree with the volumes in the inventory reconciliation analysis and the volumes of non-renewable diesel produced or imported, and report as a finding any exception.

(iv) For exporters, perform all of the following:

(A) Obtain the database, spreadsheet, or other documentation that the exporter maintains for all exported renewable fuel.

(B) Compare the volume of products identified in these documents with the volumes reported to EPA.

(C) Verify that the volumes reported to EPA agree with the volumes identified in the database, spreadsheet, or other documentation, and report as a finding any exception.

(D) Select sample batches in accordance with the guidelines in § 80.127 from each separate category of renewable fuel exported and identified in § 80.1451(a); obtain invoices, bills of lading and other documentation for the representative samples; state whether any of these documents refer to the exported fuel as advanced biofuel or cellulosic biofuel; and report as a finding whether or not the exporter calculated an advanced biofuel or cellulosic biofuel RVO for these fuels pursuant to § 80.1430(b)(1) or § 80.1430(b)(3).

(v) Compute and report as a finding the obligated party's or exporter's RVOs, and any deficit RVOs carried over from the previous year or carried into the subsequent year, and verify that the values agree with the values reported to EPA.

(vi) Obtain the database, spreadsheet, or other documentation for all RINs by type of renewable fuel used for compliance during the year being reviewed; calculate the total number of RINs associated with each type of renewable fuel used for compliance by year of generation represented in these documents; state whether this information agrees with the report to EPA and report as a finding any exceptions.

(2) *RIN transaction reports.*

(i) Obtain and read copies of a representative sample, selected in accordance with the guidelines in § 80.127, of each RIN transaction type (RINs purchased, RINs sold, RINs retired, RINs reinstated) included in the RIN transaction reports required under § 80.1451(a)(2) for the compliance year.

(ii) Obtain contracts, invoices, or other documentation for the representative samples of RIN transactions; compute the transaction types, transaction dates, and RINs traded; state whether the information agrees with the party's reports to EPA and report as a finding any exceptions.

(3) *RIN activity reports.*

(i) Obtain and read copies of all quarterly RIN activity reports required under § 80.1451(a)(3) for the compliance year.

(ii) Obtain the database, spreadsheet, or other documentation used to generate the information in the RIN activity reports; compare the RIN transaction samples reviewed under paragraph (a)(2) of this section with the corresponding entries in the database or spreadsheet and report as a finding any discrepancies; compute the total number of current-year and prior-year RINs owned at the start and end of each quarter, purchased, sold, retired and reinstated, and for parties that reported RIN activity for RINs assigned to a volume of renewable fuel, the volume and type of renewable fuel (as defined in § 80.1401) of renewable fuel owned at the end of each quarter; as represented in these documents; and state whether this information agrees with the party's reports to EPA.

(b) *Renewable fuel producers and RIN-generating importers.* The following attest procedures shall be completed for any RIN-generating renewable fuel producer or importer:

(1) *RIN generation reports.*

(i) Obtain and read copies of the reports required under § 80.1451(b)(1), (e), and (d) for the compliance year.

(ii) Obtain production data for each renewable fuel batch by type of renewable fuel that was produced or imported during the year being reviewed; compute the RIN numbers, production

dates, types, volumes of denaturant and applicable equivalence values, and production volumes for each batch; report the total RINs generated during the year being reviewed; and state whether this information agrees with the party's reports to EPA. Report as a finding any exceptions.

(iii) Verify that the proper number of RINs were generated and assigned pursuant to the requirements of § 80.1426 for each batch of renewable fuel produced or imported.

(iv) Obtain product transfer documents for a representative sample, selected in accordance with the guidelines in § 80.127, of renewable fuel batches produced or imported during the year being reviewed; verify that the product transfer documents contain the applicable information required under § 80.1453; verify the accuracy of the information contained in the product transfer documents; report as a finding any product transfer document that does not contain the applicable information required under § 80.1453.

(v)(A) Obtain documentation, as required under § 80.1451(b), (d), and (e) associated with feedstock purchases for a representative sample, selected in accordance with the guidelines in § 80.127, of renewable fuel batches produced or imported during the year being reviewed.

(B) Verify that feedstocks were properly identified in the reports and met the definition of renewable biomass in § 80.1401.

(2) *RIN transaction reports.*

(i) Obtain and read copies of a representative sample, selected in accordance with the guidelines in § 80.127, of each transaction type (RINs purchased, RINs sold, RINs retired, RINs reinstated) included in the RIN transaction reports required under § 80.1451(b)(2) for the compliance year.

(ii) Obtain contracts, invoices, or other documentation for the representative samples of RIN transactions; compute the transaction types, transaction dates, and the RINs traded; state whether this information agrees with the party's reports to EPA and report as a finding any exceptions.

(3) *RIN activity reports.*

(i) Obtain and read copies of the quarterly RIN activity reports required under § 80.1451(b)(3) for the compliance year.

(ii) Obtain the database, spreadsheet, or other documentation used to generate the information in the RIN activity reports; compare the RIN transaction samples reviewed under paragraph (b)(2) of this section with the corresponding entries in the database or spreadsheet and report as a finding any discrepancies; report the total number of each RIN generated during each quarter and compute and report the total number of current-year and prior-year RINs owned at the start and end of each quarter, purchased, sold, retired and reinstated, and for parties that reported RIN activity for RINs assigned to a volume of renewable fuel, the volume of renewable fuel owned at the end of each quarter, as represented in these documents; and state whether this information agrees with the party's reports to EPA.

(4) *Independent Third Party Engineering Review.*

(i) Obtain documentation of independent third party engineering reviews required under § 80.1450(b)(2).

(ii) Review and verify the written verification and records generated as part of the independent third party engineering review.

(c) *Other parties owning RINs.* The following attest procedures shall be completed for any party other than an obligated party or renewable fuel producer or importer that owns any RINs during a calendar year:

(1) *RIN transaction reports.*

(i) Obtain and read copies of a representative sample, selected in accordance with the guidelines in § 80.127, of each RIN transaction type (RINs purchased, RINs sold, RINs retired, RINs separated, RINs reinstated) included in the RIN transaction reports required under § 80.1451(c)(1) for the compliance year.

(ii) Obtain contracts, invoices, or other documentation for the representative samples of RIN transactions; compute the transaction types, transaction dates, and the RINs traded; state whether this information agrees with the party's reports to EPA and report as a finding any exceptions.

(2) *RIN activity reports.*

(i) Obtain and read copies of the quarterly RIN activity reports required under § 80.1451(c)(2) for the compliance year.

(ii) Obtain the database, spreadsheet, or other documentation used to generate the information in the RIN activity reports; compare the RIN transaction samples reviewed under paragraph (c)(1) of this section with the corresponding entries in the database or spreadsheet and report as a finding any discrepancies; compute the total number of current-year and prior-year RINs owned at the start and end of each quarter, purchased, sold, retired, separated, and reinstated and for parties that reported RIN activity for RINs assigned to a volume of renewable fuel, the volume of renewable fuel owned at the end of each quarter, as represented in these documents; and state whether this information agrees with the party's reports to EPA.

(d) For each compliance year, each party subject to the attest engagement requirements under this section shall cause the reports required under this section to be submitted to EPA by May 31 of the year following the compliance year.

(e) The party conducting the procedures under this section shall obtain a written representation from a company representative that the copies of the reports required under this section are complete and accurate copies of the reports filed with EPA.

(f) The party conducting the procedures under this section shall identify and report as a finding the commercial computer program used by the party to track the data required by the regulations in this subpart, if any.

[75 FR 14863, Mar. 26, 2010, as amended at 75 FR 26048, May 10, 2010]

§ 80.1465 What are the additional requirements under this subpart for foreign small refiners, foreign small refineries, and importers of RFS–FRFUEL?

(a) *Definitions.* The following additional definitions apply for this subpart:

(1) *Foreign refinery* is a refinery that is located outside the United States, the Commonwealth of Puerto Rico, the U.S. Virgin Islands, Guam, American Samoa, and the Commonwealth of the Northern Mariana Islands (collectively referred to in this section as ''the United States'').

(2) *Foreign refiner* is a person that meets the definition of refiner under § 80.2(i) for a foreign refinery.

(3) *Foreign small refinery* is a foreign refinery that has received a small refinery exemption under § 80.1441.

(4) *Foreign small refiner* is a foreign refiner that has received a small refiner exemption under § 80.1442.

(5) *RFS–FRFUEL* is transportation fuel produced at a foreign refinery that has received a small refinery exemption under § 80.1441 or by a foreign refiner with a small refiner exemption under § 80.1442.

(6) *Non-RFS–FRFUEL* is transportation fuel produced at a foreign refinery that has not received a small refinery exemption under § 80.1441 or by a foreign refiner that has not received a small refiner exemption under § 80.1442.

(b) *General requirements for RFS–FRFUEL for foreign small refineries and small refiners.* A foreign refiner must do all the following:

(1) Designate, at the time of production, each batch of transportation fuel produced at the foreign refinery that is exported for use in the United States as RFS–FRFUEL.

(2) Meet all requirements that apply to refiners who have received a small refinery or small refiner exemption under this subpart.

(c) *Designation, foreign small refiner certification, and product transfer documents.*

(1) Any foreign small refiner must designate each batch of RFS–FRFUEL as such at the time the transportation fuel is produced.

(2) On each occasion when RFS–FRFUEL is loaded onto a vessel or other transportation mode for transport to the United States, the foreign small refiner shall prepare a certification for each batch of RFS–FRFUEL that meets all the following requirements:

(i) The certification shall include the report of the independent third party under paragraph (d) of this section, and all the following additional information:

(A) The name and EPA registration number of the refinery that produced the RFS–FRFUEL.

(B) [Reserved]

(ii) The identification of the transportation fuel as RFS–FRFUEL.

(iii) The volume of RFS–FRFUEL being transported, in gallons.

(3) On each occasion when any person transfers custody or title to any RFS–FRFUEL prior to its being imported into the United States, it must include all the following information as part of the product transfer document information:

(i) Designation of the transportation fuel as RFS–FRFUEL.

(ii) The certification required under paragraph (c)(2) of this section.

(d) *Load port independent testing and refinery identification.*

(1) On each occasion that RFS–FRFUEL is loaded onto a vessel for transport to the United States the foreign small refiner shall have an independent third party do all the following:

(i) Inspect the vessel prior to loading and determine the volume of any tank bottoms.

(ii) Determine the volume of RFS–FRFUEL loaded onto the vessel, temperature-corrected to 60 °F (exclusive of any tank bottoms before loading).

(iii) Obtain the EPA-assigned registration number of the foreign refinery.

(iv) Determine the name and country of registration of the vessel used to transport the RFS–FRFUEL to the United States.

(v) Determine the date and time the vessel departs the port serving the foreign refinery.

(vi) Review original documents that reflect movement and storage of the RFS–FRFUEL from the foreign refinery to the load port, and from this review determine:

(A) The refinery at which the RFS–FRFUEL was produced; and

(B) That the RFS–FRFUEL remained segregated from Non-RFS–FRFUEL and other RFS–FRFUEL produced at a different refinery.

(2) The independent third party shall submit a report to all the following:

(i) The foreign small refiner or owner of the foreign small refinery, containing the information required under paragraph (d)(1) of this section, to accompany the product transfer documents for the vessel.

(ii) The Administrator, containing the information required under paragraph (d)(1) of this section, within thirty days following the date of the independent third party's inspection. This report shall include a description of the method used to determine the identity of the refinery at which the transportation fuel was produced, assurance that the transportation fuel remained segregated as specified in paragraph (j)(1) of this section, and a description of the transportation fuel's movement and storage between production at the source refinery and vessel loading.

(3) The independent third party must do all the following:

(i) Be approved in advance by EPA, based on a demonstration of ability to perform the procedures required in this paragraph (d).

(ii) Be independent under the criteria specified in § 80.65(f)(2)(iii).

(iii) Sign a commitment that contains the provisions specified in paragraph (f) of this section with regard to activities, facilities, and documents relevant to compliance with the requirements of this paragraph (d).

(e) *Comparison of load port and port of entry testing.*

(1)(i) Any foreign small refiner or foreign small refinery and any United States importer of RFS–FRFUEL shall compare the results from the load port testing under paragraph (d) of this section, with the port of entry testing as reported under paragraph (k) of this section, for the volume of transportation fuel, except as specified in paragraph (e)(1)(ii) of this section.

(ii) Where a vessel transporting RFS–FRFUEL offloads this transportation fuel at more than one United States port of entry, the requirements of paragraph (e)(1)(i) of this section do not apply at subsequent ports of entry if the United States importer obtains a certification from the vessel owner that the requirements of paragraph (e)(1)(i) of this section were met and that the vessel has not loaded any transportation fuel or blendstock between the first United States port of

entry and any subsequent port of entry.

(2) If the temperature-corrected volumes determined at the port of entry and at the load port differ by more than one percent, the United States importer and the foreign small refiner or foreign small refinery shall not treat the transportation fuel as RFS–FRFUEL and the importer shall include the volume of transportation fuel in the importer's RFS compliance calculations.

(f) *Foreign refiner commitments.* Any foreign small refinery or foreign small refiner shall commit to and comply with the provisions contained in this paragraph (f) as a condition to being approved for a small refinery or small refiner exemption under this subpart.

(1) Any United States Environmental Protection Agency inspector or auditor must be given full, complete, and immediate access to conduct inspections and audits of the foreign refinery.

(i) Inspections and audits may be either announced in advance by EPA, or unannounced.

(ii) Access will be provided to any location where:

(A) Transportation fuel is produced;

(B) Documents related to refinery operations are kept; and

(C) RFS–FRFUEL is stored or transported between the foreign refinery and the United States, including storage tanks, vessels, and pipelines.

(iii) EPA inspectors and auditors may be EPA employees or contractors to EPA.

(iv) Any documents requested that are related to matters covered by inspections and audits must be provided to an EPA inspector or auditor on request.

(v) Inspections and audits may include review and copying of any documents related to all the following:

(A) The volume of RFS–FRFUEL.

(B) The proper classification of transportation fuel as being RFS–FRFUEL or as not being RFS–FRFUEL.

(C) Transfers of title or custody to RFS–FRFUEL.

(D) Testing of RFS–FRFUEL.

(E) Work performed and reports prepared by independent third parties and by independent auditors under the requirements of this section, including work papers.

(vi) Inspections and audits may include interviewing employees.

(vii) Any employee of the foreign refiner must be made available for interview by the EPA inspector or auditor, on request, within a reasonable time period.

(viii) English language translations of any documents must be provided to an EPA inspector or auditor, on request, within 10 working days.

(ix) English language interpreters must be provided to accompany EPA inspectors and auditors, on request.

(2) An agent for service of process located in the District of Columbia shall be named, and service on this agent constitutes service on the foreign refiner or any employee of the foreign refiner for any action by EPA or otherwise by the United States related to the requirements of this subpart.

(3) The forum for any civil or criminal enforcement action related to the provisions of this section for violations of the Clean Air Act or regulations promulgated thereunder shall be governed by the Clean Air Act, including the EPA administrative forum where allowed under the Clean Air Act.

(4) United States substantive and procedural laws shall apply to any civil or criminal enforcement action against the foreign refiner or any employee of the foreign refiner related to the provisions of this section.

(5) Submitting an application for a small refinery or small refiner exemption, or producing and exporting transportation fuel under such exemption, and all other actions to comply with the requirements of this subpart relating to such exemption constitute actions or activities covered by and within the meaning of the provisions of 28 U.S.C. 1605(a)(2), but solely with respect to actions instituted against the foreign refiner, its agents and employees in any court or other tribunal in the United States for conduct that violates the requirements applicable to the foreign refiner under this subpart, including conduct that violates the False Statements Accountability Act of 1996 (18 U.S.C. 1001) and section 113(c)(2) of the Clean Air Act (42 U.S.C. 7413).

(6) The foreign refiner, or its agents or employees, will not seek to detain or to impose civil or criminal remedies against EPA inspectors or auditors, whether EPA employees or EPA contractors, for actions performed within the scope of EPA employment or contract related to the provisions of this section.

(7) The commitment required by this paragraph (f) shall be signed by the owner or president of the foreign refiner business.

(8) In any case where RFS–FRFUEL produced at a foreign refinery is stored or transported by another company between the refinery and the vessel that transports the RFS–FRFUEL to the United States, the foreign refiner shall obtain from each such other company a commitment that meets the requirements specified in paragraphs (f)(1) through (f)(7) of this section, and these commitments shall be included in the foreign refiner's application for a small refinery or small refiner exemption under this subpart.

(g) *Sovereign immunity*. By submitting an application for a small refinery or small refiner exemption under this subpart, or by producing and exporting transportation fuel to the United States under such exemption, the foreign refiner, and its agents and employees, without exception, become subject to the full operation of the administrative and judicial enforcement powers and provisions of the United States without limitation based on sovereign immunity, with respect to actions instituted against the foreign refiner, its agents and employees in any court or other tribunal in the United States for conduct that violates the requirements applicable to the foreign refiner under this subpart, including conduct that violates the False Statements Accountability Act of 1996 (18 U.S.C. 1001) and section 113(c)(2) of the Clean Air Act (42 U.S.C. 7413).

(h) *Bond posting*. Any foreign refiner shall meet the requirements of this paragraph (h) as a condition to approval of a foreign small refinery or foreign small refiner exemption under this subpart.

(1) The foreign refiner shall post a bond of the amount calculated using the following equation:

$$\text{Bond} = G * \$\,0.01$$

Where:

Bond = amount of the bond in United States dollars.

G = the largest volume of transportation fuel produced at the foreign refinery and exported to the United States, in gallons, during a single calendar year among the most recent of the following calendar years, up to a maximum of five calendar years: the calendar year immediately preceding the date the refinery's or refiner's application is submitted, the calendar year the application is submitted, and each succeeding calendar year.

(2) Bonds shall be posted by:

(i) Paying the amount of the bond to the Treasurer of the United States;

(ii) Obtaining a bond in the proper amount from a third party surety agent that is payable to satisfy United States administrative or judicial judgments against the foreign refiner, provided EPA agrees in advance as to the third party and the nature of the surety agreement; or

(iii) An alternative commitment that results in assets of an appropriate liquidity and value being readily available to the United States, provided EPA agrees in advance as to the alternative commitment.

(3) Bonds posted under this paragraph (h) shall:

(i) Be used to satisfy any judicial judgment that results from an administrative or judicial enforcement action for conduct in violation of this subpart, including where such conduct violates the False Statements Accountability Act of 1996 (18 U.S.C. 1001) and section 113(c)(2) of the Clean Air Act (42 U.S.C. 7413);

(ii) Be provided by a corporate surety that is listed in the United States Department of Treasury Circular 570 ''Companies Holding Certificates of Authority as Acceptable Sureties on Federal Bonds''; and

(iii) Include a commitment that the bond will remain in effect for at least five years following the end of latest annual reporting period that the foreign refiner produces transportation fuel pursuant to the requirements of this subpart.

(4) On any occasion a foreign refiner bond is used to satisfy any judgment, the foreign refiner shall increase the

bond to cover the amount used within 90 days of the date the bond is used.

(5) If the bond amount for a foreign refiner increases, the foreign refiner shall increase the bond to cover the shortfall within 90 days of the date the bond amount changes. If the bond amount decreases, the foreign refiner may reduce the amount of the bond beginning 90 days after the date the bond amount changes.

(i) *English language reports.* Any document submitted to EPA by a foreign refiner shall be in English, or shall include an English language translation.

(j) *Prohibitions.*

(1) No person may combine RFS–FRFUEL with any Non-RFS–FRFUEL, and no person may combine RFS–FRFUEL with any RFS–FRFUEL produced at a different refinery, until the importer has met all the requirements of paragraph (k) of this section.

(2) No foreign refiner or other person may cause another person to commit an action prohibited in paragraph (j)(1) of this section, or that otherwise violates the requirements of this section.

(k) *United States importer requirements.* Any United States importer of RFS–FRFUEL shall meet the following requirements:

(1) Each batch of imported RFS–FRFUEL shall be classified by the importer as being RFS–FRFUEL.

(2) Transportation fuel shall be classified as RFS–FRFUEL according to the designation by the foreign refiner if this designation is supported by product transfer documents prepared by the foreign refiner as required in paragraph (c) of this section. Additionally, the importer shall comply with all requirements of this subpart applicable to importers.

(3) For each transportation fuel batch classified as RFS–FRFUEL, any United States importer shall have an independent third party do all the following:

(i) Determine the volume of transportation fuel in the vessel.

(ii) Use the foreign refiner's RFS–FRFUEL certification to determine the name and EPA-assigned registration number of the foreign refinery that produced the RFS–FRFUEL.

(iii) Determine the name and country of registration of the vessel used to transport the RFS–FRFUEL to the United States.

(iv) Determine the date and time the vessel arrives at the United States port of entry.

(4) Any importer shall submit reports within 30 days following the date any vessel transporting RFS–FRFUEL arrives at the United States port of entry to:

(i) The Administrator, containing the information determined under paragraph (k)(3) of this section; and

(ii) The foreign refiner, containing the information determined under paragraph (k)(3)(i) of this section, and including identification of the port at which the product was off loaded.

(5) Any United States importer shall meet all other requirements of this subpart for any imported transportation fuel that is not classified as RFS–FRFUEL under paragraph (k)(2) of this section.

(l) *Truck imports of RFS–FRFUEL produced at a foreign refinery.*

(1) Any refiner whose RFS–FRFUEL is transported into the United States by truck may petition EPA to use alternative procedures to meet all the following requirements:

(i) Certification under paragraph (c)(2) of this section.

(ii) Load port and port of entry testing requirements under paragraphs (d) and (e) of this section.

(iii) Importer testing requirements under paragraph (k)(3) of this section.

(2) These alternative procedures must ensure RFS–FRFUEL remains segregated from Non-RFS–FRFUEL until it is imported into the United States. The petition will be evaluated based on whether it adequately addresses all the following:

(i) Provisions for monitoring pipeline shipments, if applicable, from the refinery, that ensure segregation of RFS–FRFUEL from that refinery from all other transportation fuel.

(ii) Contracts with any terminals and/or pipelines that receive and/or transport RFS–FRFUEL that prohibit the commingling of RFS–FRFUEL with Non-RFS–FRFUEL or RFS–FRFUEL from other foreign refineries.

(iii) Attest procedures to be conducted annually by an independent third party that review loading records

and import documents based on volume reconciliation, or other criteria, to confirm that all RFS–FRFUEL remains segregated throughout the distribution system.

(3) The petition described in this section must be submitted to EPA along with the application for a small refinery or small refiner exemption under this subpart.

(m) *Additional attest requirements for importers of RFS–FRFUEL.* The following additional procedures shall be carried out by any importer of RFS–FRFUEL as part of the attest engagement required for importers under this subpart M.

(1) Obtain listings of all tenders of RFS–FRFUEL. Agree the total volume of tenders from the listings to the transportation fuel inventory reconciliation analysis required in § 80.133(b), and to the volumes determined by the third party under paragraph (d) of this section.

(2) For each tender under paragraph (m)(1) of this section, where the transportation fuel is loaded onto a marine vessel, report as a finding the name and country of registration of each vessel, and the volumes of RFS–FRFUEL loaded onto each vessel.

(3) Select a sample from the list of vessels identified per paragraph (m)(2) of this section used to transport RFS–FRFUEL, in accordance with the guidelines in § 80.127, and for each vessel selected perform all the following:

(i) Obtain the report of the independent third party, under paragraph (d) of this section.

(A) Agree the information in these reports with regard to vessel identification and transportation fuel volume.

(B) Identify, and report as a finding, each occasion the load port and port of entry volume results differ by more than the amount allowed in paragraph (e)(2) of this section, and determine whether all of the requirements of paragraph (e)(2) of this section have been met.

(ii) Obtain the documents used by the independent third party to determine transportation and storage of the RFS–FRFUEL from the refinery to the load port, under paragraph (d) of this section. Obtain tank activity records for any storage tank where the RFS–FRFUEL is stored, and pipeline activity records for any pipeline used to transport the RFS–FRFUEL prior to being loaded onto the vessel. Use these records to determine whether the RFS–FRFUEL was produced at the refinery that is the subject of the attest engagement, and whether the RFS–FRFUEL was mixed with any Non-RFS–FRFUEL or any RFS–FRFUEL produced at a different refinery.

(4) Select a sample from the list of vessels identified per paragraph (m)(2) of this section used to transport RFS–FRFUEL, in accordance with the guidelines in § 80.127, and for each vessel selected perform all of the following:

(i) Obtain a commercial document of general circulation that lists vessel arrivals and departures, and that includes the port and date of departure of the vessel, and the port of entry and date of arrival of the vessel.

(ii) Agree the vessel's departure and arrival locations and dates from the independent third party and United States importer reports to the information contained in the commercial document.

(5) Obtain separate listings of all tenders of RFS–FRFUEL, and perform all the following:

(i) Agree the volume of tenders from the listings to the transportation fuel inventory reconciliation analysis in § 80.133(b).

(ii) Obtain a separate listing of the tenders under this paragraph (m)(5) where the transportation fuel is loaded onto a marine vessel. Select a sample from this listing in accordance with the guidelines in § 80.127, and obtain a commercial document of general circulation that lists vessel arrivals and departures, and that includes the port and date of departure and the ports and dates where the transportation fuel was off loaded for the selected vessels. Determine and report as a finding the country where the transportation fuel was off loaded for each vessel selected.

(6) In order to complete the requirements of this paragraph (m), an auditor shall do all the following:

(i) Be independent of the foreign refiner or importer.

(ii) Be licensed as a Certified Public Accountant in the United States and a

citizen of the United States, or be approved in advance by EPA based on a demonstration of ability to perform the procedures required in §§ 80.125 through 80.127, 80.130, 80.1464, and this paragraph (m).

(iii) Sign a commitment that contains the provisions specified in paragraph (f) of this section with regard to activities and documents relevant to compliance with the requirements of §§ 80.125 through 80.127, 80.130, 80.1464, and this paragraph (m).

(n) *Withdrawal or suspension of foreign small refiner or foreign small refinery status.* EPA may withdraw or suspend a foreign refiner's small refinery or small refiner exemption where:

(1) A foreign refiner fails to meet any requirement of this section;

(2) A foreign government fails to allow EPA inspections as provided in paragraph (f)(1) of this section;

(3) A foreign refiner asserts a claim of, or a right to claim, sovereign immunity in an action to enforce the requirements in this subpart; or

(4) A foreign refiner fails to pay a civil or criminal penalty that is not satisfied using the foreign refiner bond specified in paragraph (h) of this section.

(o) *Additional requirements for applications, reports and certificates.* Any application for a small refinery or small refiner exemption, alternative procedures under paragraph (l) of this section, any report, certification, or other submission required under this section shall be:

(1) Submitted in accordance with procedures specified by the Administrator, including use of any forms that may be specified by the Administrator.

(2) Signed by the president or owner of the foreign refiner company, or by that person's immediate designee, and shall contain the following declaration: ''I hereby certify: (1) That I have actual authority to sign on behalf of and to bind [insert name of foreign refiner] with regard to all statements contained herein; (2) that I am aware that the information contained herein is being Certified, or submitted to the United States Environmental Protection Agency, under the requirements of 40 CFR part 80, subpart M, and that the information is material for determining compliance under these regulations; and (3) that I have read and understand the information being Certified or submitted, and this information is true, complete and correct to the best of my knowledge and belief after I have taken reasonable and appropriate steps to verify the accuracy thereof. I affirm that I have read and understand the provisions of 40 CFR part 80, subpart M, including 40 CFR 80.1465 apply to [INSERT NAME OF FOREIGN REFINER]. Pursuant to Clean Air Act section 113(c) and 18 U.S.C. 1001, the penalty for furnishing false, incomplete or misleading information in this certification or submission is a fine of up to $10,000 U.S., and/or imprisonment for up to five years.''

[75 FR 14863, Mar. 26, 2010, as amended at 75 FR 26048, May 10, 2010]

§ 80.1466 What are the additional requirements under this subpart for RIN- generating foreign producers and importers of renewable fuels for which RINs have been generated by the foreign producer?

(a) *Foreign producer of renewable fuel.* For purposes of this subpart, a foreign producer of renewable fuel is a person located outside the United States, the Commonwealth of Puerto Rico, the Virgin Islands, Guam, American Samoa, and the Commonwealth of the Northern Mariana Islands (collectively referred to in this section as ''the United States'') that has been approved by EPA to generate RINs for renewable fuel it produces for export to the United States, hereinafter referred to as a ''foreign producer'' under this section.

(b) *General requirements.* An approved foreign producer under this section must meet all requirements that apply to renewable fuel producers under this subpart.

(c) *Designation, foreign producer certification, and product transfer documents.*

(1) Any approved foreign producer under this section that generates RINs for renewable fuel must designate each batch of such renewable fuel as ''RFS–FRRF'' at the time the renewable fuel is produced.

(2) On each occasion when RFS–FRRF is transferred for transport to a

vessel or loaded onto a vessel or other transportation mode for transport to the United States, the RIN-generating foreign producer shall prepare a certification for each batch of RFS–FRRF; the certification shall include the report of the independent third party under paragraph (d) of this section, and all the following additional information:

(i) The name and EPA registration number of the company that produced the RFS–FRRF.

(ii) The identification of the renewable fuel as RFS–FRRF.

(iii) The identification of the renewable fuel by type, D code, and number of RINs generated.

(iv) The volume of RFS–FRRF, standardized per § 80.1426(f)(8), being transported, in gallons.

(3) On each occasion when any person transfers custody or title to any RFS–FRRF prior to its being imported into the United States, it must include all the following information as part of the product transfer document information:

(i) Designation of the renewable fuel as RFS–FRRF.

(ii) The certification required under paragraph (c)(2) of this section.

(d) *Load port independent testing and producer identification.*

(1) On each occasion that RFS–FRRF is loaded onto a vessel for transport to the United States the RIN-generating foreign producer shall have an independent third party do all the following:

(i) Inspect the vessel prior to loading and determine the volume of any tank bottoms.

(ii) Determine the volume of RFS–FRRF, standardized per § 80.1426(f)(8), loaded onto the vessel (exclusive of any tank bottoms before loading).

(iii) Obtain the EPA-assigned registration number of the foreign producer.

(iv) Determine the name and country of registration of the vessel used to transport the RFS–FRRF to the United States.

(v) Determine the date and time the vessel departs the port serving the foreign producer.

(vi) Review original documents that reflect movement and storage of the RFS–FRRF from the RIN-generating foreign producer to the load port, and from this review determine all the following:

(A) The facility at which the RFS–FRRF was produced.

(B) That the RFS–FRRF remained segregated from Non-RFS–FRRF and other RFS–FRRF produced by a different foreign producer.

(2) The independent third party shall submit a report to the following:

(i) The RIN-generating foreign producer, containing the information required under paragraph (d)(1) of this section, to accompany the product transfer documents for the vessel.

(ii) The Administrator, containing the information required under paragraph (d)(1) of this section, within thirty days following the date of the independent third party's inspection. This report shall include a description of the method used to determine the identity of the foreign producer facility at which the renewable fuel was produced, assurance that the renewable fuel remained segregated as specified in paragraph (j)(1) of this section, and a description of the renewable fuel's movement and storage between production at the source facility and vessel loading.

(3) The independent third party must:

(i) Be approved in advance by EPA, based on a demonstration of ability to perform the procedures required in this paragraph (d);

(ii) Be independent under the criteria specified in § 80.65(e)(2)(iii); and

(iii) Sign a commitment that contains the provisions specified in paragraph (f) of this section with regard to activities, facilities and documents relevant to compliance with the requirements of this paragraph (d).

(e) *Comparison of load port and port of entry testing.*

(1)(i) Any RIN-generating foreign producer and any United States importer of RFS–FRRF shall compare the results from the load port testing under paragraph (d) of this section, with the port of entry testing as reported under paragraph (k) of this section, for the volume of renewable fuel, standardized per § 80.1426(f)(8), except as specified in paragraph (e)(1)(ii) of this section.

(ii) Where a vessel transporting RFS–FRRF offloads the renewable fuel at more than one United States port of entry, the requirements of paragraph (e)(1)(i) of this section do not apply at subsequent ports of entry if the United States importer obtains a certification from the vessel owner that the requirements of paragraph (e)(1)(i) of this section were met and that the vessel has not loaded any renewable fuel between the first United States port of entry and the subsequent ports of entry.

(2)(i) If the temperature-corrected volumes, after accounting for tank bottoms, determined at the port of entry and at the load port differ by more than one percent, the number of RINs associated with the renewable fuel shall be calculated based on the lesser of the two volumes in paragraph (e)(1)(i) of this section.

(ii) Where the port of entry volume is the lesser of the two volumes in paragraph (e)(1)(i) of this section, the importer shall calculate the difference between the number of RINs originally assigned by the foreign producer and the number of RINs calculated under § 80.1426 for the volume of renewable fuel as measured at the port of entry, and acquire and retire that amount of RINs in accordance with paragraph (k)(3) of this section.

(f) *Foreign producer commitments*. Any RIN-generating foreign producer shall commit to and comply with the provisions contained in this paragraph (f) as a condition to being approved as a foreign producer under this subpart.

(1) Any United States Environmental Protection Agency inspector or auditor must be given full, complete, and immediate access to conduct inspections and audits of the foreign producer facility.

(i) Inspections and audits may be either announced in advance by EPA, or unannounced.

(ii) Access will be provided to any location where:

(A) Renewable fuel is produced;

(B) Documents related to renewable fuel producer operations are kept; and

(C) RFS–FRRF is stored or transported between the foreign producer and the United States, including storage tanks, vessels and pipelines.

(iii) EPA inspectors and auditors may be EPA employees or contractors to EPA.

(iv) Any documents requested that are related to matters covered by inspections and audits must be provided to an EPA inspector or auditor on request.

(v) Inspections and audits may include review and copying of any documents related to the following:

(A) The volume of RFS–FRRF.

(B) The proper classification of renewable fuel as being RFS–FRRF.

(C) Transfers of title or custody to RFS–FRRF.

(D) Work performed and reports prepared by independent third parties and by independent auditors under the requirements of this section, including work papers.

(vi) Inspections and audits by EPA may include interviewing employees.

(vii) Any employee of the foreign producer must be made available for interview by the EPA inspector or auditor, on request, within a reasonable time period.

(viii) English language translations of any documents must be provided to an EPA inspector or auditor, on request, within 10 working days.

(ix) English language interpreters must be provided to accompany EPA inspectors and auditors, on request.

(2) An agent for service of process located in the District of Columbia shall be named, and service on this agent constitutes service on the foreign producer or any employee of the foreign producer for any action by EPA or otherwise by the United States related to the requirements of this subpart.

(3) The forum for any civil or criminal enforcement action related to the provisions of this section for violations of the Clean Air Act or regulations promulgated thereunder shall be governed by the Clean Air Act, including the EPA administrative forum where allowed under the Clean Air Act.

(4) United States substantive and procedural laws shall apply to any civil or criminal enforcement action against the foreign producer or any employee of the foreign producer related to the provisions of this section.

(5) Applying to be an approved foreign producer under this section, or

producing or exporting renewable fuel under such approval, and all other actions to comply with the requirements of this subpart relating to such approval constitute actions or activities covered by and within the meaning of the provisions of 28 U.S.C. 1605(a)(2), but solely with respect to actions instituted against the foreign producer, its agents and employees in any court or other tribunal in the United States for conduct that violates the requirements applicable to the foreign producer under this subpart, including conduct that violates the False Statements Accountability Act of 1996 (18 U.S.C. 1001) and section 113(c)(2) of the Clean Air Act (42 U.S.C. 7413).

(6) The foreign producer, or its agents or employees, will not seek to detain or to impose civil or criminal remedies against EPA inspectors or auditors for actions performed within the scope of EPA employment or contract related to the provisions of this section.

(7) The commitment required by this paragraph (f) shall be signed by the owner or president of the foreign producer company.

(8) In any case where RFS–FRRF produced at a foreign producer facility is stored or transported by another company between the production facility and the vessel that transports the RFS–FRRF to the United States, the foreign producer shall obtain from each such other company a commitment that meets the requirements specified in paragraphs (f)(1) through (7) of this section, and these commitments shall be included in the foreign producer's application to be an approved foreign producer under this subpart.

(g) *Sovereign immunity*. By submitting an application to be an approved foreign producer under this subpart, or by producing and exporting renewable fuel to the United States under such approval, the foreign producer, and its agents and employees, without exception, become subject to the full operation of the administrative and judicial enforcement powers and provisions of the United States without limitation based on sovereign immunity, with respect to actions instituted against the foreign producer, its agents and employees in any court or other tribunal in the United States for conduct that violates the requirements applicable to the foreign producer under this subpart, including conduct that violates the False Statements Accountability Act of 1996 (18 U.S.C. 1001) and section 113(c)(2) of the Clean Air Act (42 U.S.C. 7413).

(h) *Bond posting*. Any RIN-generating foreign producer shall meet the requirements of this paragraph (h) as a condition to approval as a foreign producer under this subpart.

(1) The RIN-generating foreign producer shall post a bond of the amount calculated using the following equation

$$\text{Bond} = G * \$\,0.0$$

Where

Bond = amount of the bond in U.S. dollars.

G = the greater of: the largest volume of renewable fuel produced by the foreign producer and exported to the United States, in gallons, during a single calendar year among the five preceding calendar years, or the largest volume of renewable fuel that the foreign producers expects to export to the Unites States during any calendar year identified in the Production Outlook Report required by § 80.1449. If the volume of renewable fuel exported to the United States increases above the largest volume identified in the Production Outlook Report during any calendar year, the foreign producer shall increase the bond to cover the shortfall within 90 days.

(2) Bonds shall be posted by any of the following methods:

(i) Paying the amount of the bond to the Treasurer of the United States.

(ii) Obtaining a bond in the proper amount from a third party surety agent that is payable to satisfy United States administrative or judicial judgments against the foreign producer, provided EPA agrees in advance as to the third party and the nature of the surety agreement.

(iii) An alternative commitment that results in assets of an appropriate liquidity and value being readily available to the United States provided EPA agrees in advance as to the alternative commitment.

(3) Bonds posted under this paragraph (h) shall:

(i) Be used to satisfy any judicial judgment that results from an administrative or judicial enforcement action for conduct in violation of this subpart, including where such conduct violates the False Statements Accountability

Act of 1996 (18 U.S.C. 1001) and section 113(c)(2) of the Clean Air Act (42 U.S.C. 7413);

(ii) Be provided by a corporate surety that is listed in the United States Department of Treasury Circular 570 ''Companies Holding Certificates of Authority as Acceptable Sureties on Federal Bonds''; and

(iii) Include a commitment that the bond will remain in effect for at least five years following the end of latest annual reporting period that the foreign producer produces renewable fuel pursuant to the requirements of this subpart.

(4) On any occasion a foreign producer bond is used to satisfy any judgment, the foreign producer shall increase the bond to cover the amount used within 90 days of the date the bond is used.

(i) *English language reports.* Any document submitted to EPA by a foreign producer shall be in English, or shall include an English language translation.

(j) *Prohibitions.*

(1) No person may combine RFS–FRRF with any Non-RFS–FRRF, and no person may combine RFS–FRRF with any RFS–FRRF produced at a different production facility, until the importer has met all the requirements of paragraph (k) of this section.

(2) No foreign producer or other person may cause another person to commit an action prohibited in paragraph (j)(1) of this section, or that otherwise violates the requirements of this section.

(3) No foreign producer and importer may generate RINs for the same volume of renewable fuel.

(4) A foreign producer of renewable fuel is prohibited from generating RINs in excess of the number for which the bond requirements of this section have been satisfied.

(k) *Requirements for United States importers of RFS–FRRF.* Any United States importers of RFS–FRRF shall meet all the following requirements:

(1) Renewable fuel shall be classified as RFS–FRRF according to the designation by the foreign producer if this designation is supported by product transfer documents prepared by the foreign producer as required in paragraph (c) of this section.

(2) For each renewable fuel batch classified as RFS–FRRF, any United States importer shall have an independent third party do all the following:

(i) Determine the volume of renewable fuel, standardized per § 80.1426(f)(8), in the vessel.

(ii) Use the foreign producer's RFS–FRRF certification to determine the name and EPA-assigned registration number of the foreign producer that produced the RFS–FRRF.

(iii) Determine the name and country of registration of the vessel used to transport the RFS–FRRF to the United States.

(iv) Determine the date and time the vessel arrives at the United States port of entry.

(3) Where the importer is required to retire RINs under paragraph (e)(2) of this section, the importer must report the retired RINs in the applicable reports under § 80.1451.

(4) Any importer shall submit reports within 30 days following the date any vessel transporting RFS–FRRF arrives at the United States port of entry to all the following:

(i) The Administrator, containing the information determined under paragraph (k)(2) of this section.

(ii) The foreign producer, containing the information determined under paragraph (k)(2)(i) of this section, and including identification of the port at which the product was offloaded, and any RINs retired under paragraph (e)(2) of this section.

(5) Any United States importer shall meet all other requirements of this subpart for any imported renewable fuel that is not classified as RFS–FRRF under paragraph (k)(1) of this section.

(l) *Truck imports of RFS–FRRF produced by a foreign producer.*

(1) Any foreign producer whose RFS–FRRF is transported into the United States by truck may petition EPA to use alternative procedures to meet all the following requirements:

(i) Certification under paragraph (c)(2) of this section.

(ii) Load port and port of entry testing under paragraphs (d) and (e) of this section.

(iii) Importer testing under paragraph (k)(2) of this section.

(2) These alternative procedures must ensure RFS–FRRF remains segregated from Non-RFS–FRRF until it is imported into the United States. The petition will be evaluated based on whether it adequately addresses all of the following:

(i) Contracts with any facilities that receive and/or transport RFS–FRRF that prohibit the commingling of RFS–FRRF with Non-RFS–FRRF or RFS–FRRF from other foreign producers.

(ii) Attest procedures to be conducted annually by an independent third party that review loading records and import documents based on volume reconciliation to confirm that all RFS–FRRF remains segregated.

(3) The petition described in this section must be submitted to EPA along with the application for approval as a foreign producer under this subpart.

(m) *Additional attest requirements for producers of RFS–FRRF.* The following additional procedures shall be carried out by any producer of RFS–FRRF as part of the attest engagement required for renewable fuel producers under this subpart M.

(1) Obtain listings of all tenders of RFS–FRRF. Agree the total volume of tenders from the listings to the volumes determined by the third party under paragraph (d) of this section.

(2) For each tender under paragraph (m)(1) of this section, where the renewable fuel is loaded onto a marine vessel, report as a finding the name and country of registration of each vessel, and the volumes of RFS–FRRF loaded onto each vessel.

(3) Select a sample from the list of vessels identified in paragraph (m)(2) of this section used to transport RFS–FRRF, in accordance with the guidelines in § 80.127, and for each vessel selected perform all the following:

(i) Obtain the report of the independent third party, under paragraph (d) of this section, and of the United States importer under paragraph (k) of this section.

(A) Agree the information in these reports with regard to vessel identification and renewable fuel volume.

(B) Identify, and report as a finding, each occasion the load port and port of entry volume results differ by more than the amount allowed in paragraph (e) of this section, and determine whether the importer retired the appropriate amount of RINs as required under paragraph (e)(2) of this section, and submitted the applicable reports under § 80.1451 in accordance with paragraph (k)(4) of this section.

(ii) Obtain the documents used by the independent third party to determine transportation and storage of the RFS–FRRF from the foreign producer's facility to the load port, under paragraph (d) of this section. Obtain tank activity records for any storage tank where the RFS–FRRF is stored, and activity records for any mode of transportation used to transport the RFS–FRRF prior to being loaded onto the vessel. Use these records to determine whether the RFS–FRRF was produced at the foreign producer's facility that is the subject of the attest engagement, and whether the RFS–FRRF was mixed with any Non-RFS–FRRF or any RFS–FRRF produced at a different facility.

(4) Select a sample from the list of vessels identified in paragraph (m)(2) of this section used to transport RFS–FRRF, in accordance with the guidelines in § 80.127, and for each vessel selected perform the following:

(i) Obtain a commercial document of general circulation that lists vessel arrivals and departures, and that includes the port and date of departure of the vessel, and the port of entry and date of arrival of the vessel.

(ii) Agree the vessel's departure and arrival locations and dates from the independent third party and United States importer reports to the information contained in the commercial document.

(5) Obtain a separate listing of the tenders under this paragraph (m)(5) where the RFS–FRRF is loaded onto a marine vessel. Select a sample from this listing in accordance with the guidelines in § 80.127, and obtain a commercial document of general circulation that lists vessel arrivals and departures, and that includes the port

and date of departure and the ports and dates where the renewable fuel was offloaded for the selected vessels. Determine and report as a finding the country where the renewable fuel was offloaded for each vessel selected.

(6) In order to complete the requirements of this paragraph (m) an auditor shall:

(i) Be independent of the foreign producer;

(ii) Be licensed as a Certified Public Accountant in the United States and a citizen of the United States, or be approved in advance by EPA based on a demonstration of ability to perform the procedures required in §§ 80.125 through 80.127, 80.130, 80.1464, and this paragraph (m); and

(iii) Sign a commitment that contains the provisions specified in paragraph (f) of this section with regard to activities and documents relevant to compliance with the requirements of §§ 80.125 through 80.127, 80.130, 80.1464, and this paragraph (m).

(n) *Withdrawal or suspension of foreign producer approval.* EPA may withdraw or suspend a foreign producer's approval where any of the following occur:

(1) A foreign producer fails to meet any requirement of this section.

(2) A foreign government fails to allow EPA inspections or audits as provided in paragraph (f)(1) of this section.

(3) A foreign producer asserts a claim of, or a right to claim, sovereign immunity in an action to enforce the requirements in this subpart.

(4) A foreign producer fails to pay a civil or criminal penalty that is not satisfied using the foreign producer bond specified in paragraph (h) of this section.

(o) *Additional requirements for applications, reports and certificates.* Any application for approval as a foreign producer, alternative procedures under paragraph (l) of this section, any report, certification, or other submission required under this section shall be:

(1) Submitted in accordance with procedures specified by the Administrator, including use of any forms that may be specified by the Administrator.

(2) Signed by the president or owner of the foreign producer company, or by that person's immediate designee, and shall contain the following declaration: ''I hereby certify: (1) That I have actual authority to sign on behalf of and to bind [INSERT NAME OF FOREIGN PRODUCER] with regard to all statements contained herein; (2) that I am aware that the information contained herein is being Certified, or submitted to the United States Environmental Protection Agency, under the requirements of 40 CFR part 80, subpart M, and that the information is material for determining compliance under these regulations; and (3) that I have read and understand the information being Certified or submitted, and this information is true, complete and correct to the best of my knowledge and belief after I have taken reasonable and appropriate steps to verify the accuracy thereof. I affirm that I have read and understand the provisions of 40 CFR part 80, subpart M, including 40 CFR 80.1465 apply to [INSERT NAME OF FOREIGN PRODUCER]. Pursuant to Clean Air Act section 113(c) and 18 U.S.C. 1001, the penalty for furnishing false, incomplete or misleading information in this certification or submission is a fine of up to $10,000 U.S., and/or imprisonment for up to five years.''.

§ 80.1467 What are the additional requirements under this subpart for a foreign RIN owner?

(a) *Foreign RIN owner.* For purposes of this subpart, a foreign RIN owner is a person located outside the United States, the Commonwealth of Puerto Rico, the Virgin Islands, Guam, American Samoa, and the Commonwealth of the Northern Mariana Islands (collectively referred to in this section as ''the United States'') that has been approved by EPA to own RINs.

(b) *General requirement.* An approved foreign RIN owner must meet all requirements that apply to parties who own RINs under this subpart.

(c) *Foreign RIN owner commitments.* Any person shall commit to and comply with the provisions contained in this paragraph (c) as a condition to being approved as a foreign RIN owner under this subpart.

(1) Any United States Environmental Protection Agency inspector or auditor must be given full, complete, and immediate access to conduct inspections

and audits of the foreign RIN owner's place of business.

(i) Inspections and audits may be either announced in advance by EPA, or unannounced.

(ii) Access will be provided to any location where documents related to RINs the foreign RIN owner has obtained, sold, transferred or held are kept.

(iii) Inspections and audits may be by EPA employees or contractors to EPA.

(iv) Any documents requested that are related to matters covered by inspections and audits must be provided to an EPA inspector or auditor on request.

(v) Inspections and audits by EPA may include review and copying of any documents related to the following:

(A) Transfers of title to RINs.

(B) Work performed and reports prepared by independent auditors under the requirements of this section, including work papers.

(vi) Inspections and audits by EPA may include interviewing employees.

(vii) Any employee of the foreign RIN owner must be made available for interview by the EPA inspector or auditor, on request, within a reasonable time period.

(viii) English language translations of any documents must be provided to an EPA inspector or auditor, on request, within 10 working days.

(ix) English language interpreters must be provided to accompany EPA inspectors and auditors, on request.

(2) An agent for service of process located in the District of Columbia shall be named, and service on this agent constitutes service on the foreign RIN owner or any employee of the foreign RIN owner for any action by EPA or otherwise by the United States related to the requirements of this subpart.

(3) The forum for any civil or criminal enforcement action related to the provisions of this section for violations of the Clean Air Act or regulations promulgated thereunder shall be governed by the Clean Air Act, including the EPA administrative forum where allowed under the Clean Air Act.

(4) United States substantive and procedural laws shall apply to any civil or criminal enforcement action against the foreign RIN owner or any employee of the foreign RIN owner related to the provisions of this section.

(5) Submitting an application to be a foreign RIN owner, and all other actions to comply with the requirements of this subpart constitute actions or activities covered by and within the meaning of the provisions of 28 U.S.C. 1605(a)(2), but solely with respect to actions instituted against the foreign RIN owner, its agents and employees in any court or other tribunal in the United States for conduct that violates the requirements applicable to the foreign RIN owner under this subpart, including conduct that violates the False Statements Accountability Act of 1996 (18 U.S.C. 1001) and section 113(c)(2) of the Clean Air Act (42 U.S.C. 7413).

(6) The foreign RIN owner, or its agents or employees, will not seek to detain or to impose civil or criminal remedies against EPA inspectors or auditors, whether EPA employees or EPA contractors, for actions performed within the scope of EPA employment related to the provisions of this section.

(7) The commitment required by this paragraph (c) shall be signed by the owner or president of the foreign RIN owner business.

(d) *Sovereign immunity*. By submitting an application to be a foreign RIN owner under this subpart, the foreign entity, and its agents and employees, without exception, become subject to the full operation of the administrative and judicial enforcement powers and provisions of the United States without limitation based on sovereign immunity, with respect to actions instituted against the foreign RIN owner, its agents and employees in any court or other tribunal in the United States for conduct that violates the requirements applicable to the foreign RIN owner under this subpart, including conduct that violates the False Statements Accountability Act of 1996 (18 U.S.C. 1001) and section 113(c)(2) of the Clean Air Act (42 U.S.C. 7413).

(e) *Bond posting*. Any foreign entity shall meet the requirements of this paragraph (e) as a condition to approval as a foreign RIN owner under this subpart.

(1) The foreign entity shall post a bond of the amount calculated using the following equation:

Bond = G * $ 0.01

Where

Bond = amount of the bond in U.S. dollars.

G = the total of the number of gallon-RINs the foreign entity expects to sell or transfer during the first calendar year that the foreign entity is a RIN owner, plus the number of gallon-RINs the foreign entity expects to sell or transfer during the next four calendar years. After the first calendar year, the bond amount shall be based on the actual number of gallon-RINs sold or transferred during the current calendar year and the number held at the conclusion of the current averaging year, plus the number of gallon-RINs sold or transferred during the four most recent calendar years preceding the current calendar year. For any year for which there were fewer than four preceding years in which the foreign entity sold or transferred RINs, the bond shall be based on the total of the number of gallon-RINs sold or transferred during the current calendar year and the number held at the end of the current calendar year, plus the number of gallon-RINs sold or transferred during any calendar year preceding the current calendar year, plus the number of gallon-RINs expected to be sold or transferred during subsequent calendar years, the total number of years not to exceed four calendar years in addition to the current calendar year.

(2) Bonds shall be posted by doing any of the following:

(i) Paying the amount of the bond to the Treasurer of the United States.

(ii) Obtaining a bond in the proper amount from a third party surety agent that is payable to satisfy United States administrative or judicial judgments against the foreign RIN owner, provided EPA agrees in advance as to the third party and the nature of the surety agreement.

(iii) An alternative commitment that results in assets of an appropriate liquidity and value being readily available to the United States, provided EPA agrees in advance as to the alternative commitment.

(3) All the following shall apply to bonds posted under this paragraph (e); bonds shall:

(i) Be used to satisfy any judicial judgment that results from an administrative or judicial enforcement action for conduct in violation of this subpart, including where such conduct violates the False Statements Accountability Act of 1996 (18 U.S.C. 1001) and section 113(c)(2) of the Clean Air Act (42 U.S.C. 7413).

(ii) Be provided by a corporate surety that is listed in the United States Department of Treasury Circular 570 ''Companies Holding Certificates of Authority as Acceptable Sureties on Federal Bonds''.

(iii) Include a commitment that the bond will remain in effect for at least five years following the end of latest reporting period in which the foreign RIN owner obtains, sells, transfers, or holds RINs.

(4) On any occasion a foreign RIN owner bond is used to satisfy any judgment, the foreign RIN owner shall increase the bond to cover the amount used within 90 days of the date the bond is used.

(f) *English language reports.* Any document submitted to EPA by a foreign RIN owner shall be in English, or shall include an English language translation.

(g) *Prohibitions.*

(1) A foreign RIN owner is prohibited from obtaining, selling, transferring, or holding any RIN that is in excess of the number for which the bond requirements of this section have been satisfied.

(2) Any RIN that is sold, transferred, or held that is in excess of the number for which the bond requirements of this section have been satisfied is an invalid RIN under § 80.1431.

(3) Any RIN that is obtained from a person located outside the United States that is not an approved foreign RIN owner under this section is an invalid RIN under § 80.1431.

(4) No foreign RIN owner or other person may cause another person to commit an action prohibited in this paragraph (g), or that otherwise violates the requirements of this section.

(h) *Additional attest requirements for foreign RIN owners.* The following additional requirements apply to any foreign RIN owner as part of the attest engagement required for RIN owners under this subpart M.

(1) The attest auditor must be independent of the foreign RIN owner.

(2) The attest auditor must be licensed as a Certified Public Accountant in the United States and a citizen of the United States, or be approved in advance by EPA based on a demonstration of ability to perform the procedures required in §§ 80.125 through 80.127, 80.130, and 80.1464.

(3) The attest auditor must sign a commitment that contains the provisions specified in paragraph (c) of this section with regard to activities and documents relevant to compliance with the requirements of §§ 80.125 through 80.127, 80.130, and 80.1464.

(i) *Withdrawal or suspension of foreign RIN owner status.* EPA may withdraw or suspend its approval of a foreign RIN owner where any of the following occur:

(1) A foreign RIN owner fails to meet any requirement of this section, including, but not limited to, the bond requirements.

(2) A foreign government fails to allow EPA inspections as provided in paragraph (c)(1) of this section.

(3) A foreign RIN owner asserts a claim of, or a right to claim, sovereign immunity in an action to enforce the requirements in this subpart.

(4) A foreign RIN owner fails to pay a civil or criminal penalty that is not satisfied using the foreign RIN owner bond specified in paragraph (e) of this section.

(j) *Additional requirements for applications, reports and certificates.* Any application for approval as a foreign RIN owner, any report, certification, or other submission required under this section shall be:

(1) Submitted in accordance with procedures specified by the Administrator, including use of any forms that may be specified by the Administrator.

(2) Signed by the president or owner of the foreign RIN owner company, or by that person's immediate designee, and shall contain the following declaration:

''I hereby certify: (1) That I have actual authority to sign on behalf of and to bind [INSERT NAME OF FOREIGN RIN OWNER] with regard to all statements contained herein; (2) that I am aware that the information contained herein is being Certified, or submitted to the United States Environmental Protection Agency, under the requirements of 40 CFR part 80, subpart M, and that the information is material for determining compliance under these regulations; and (3) that I have read and understand the information being Certified or submitted, and this information is true, complete and correct to the best of my knowledge and belief after I have taken reasonable and appropriate steps to verify the accuracy thereof. I affirm that I have read and understand the provisions of 40 CFR part 80, subpart M, including 40 CFR 80.1467 apply to [INSERT NAME OF FOREIGN RIN OWNER]. Pursuant to Clean Air Act section 113(c) and 18 U.S.C. 1001, the penalty for furnishing false, incomplete or misleading information in this certification or submission is a fine of up to $10,000 U.S., and/or imprisonment for up to five years.''.

§ 80.1468 Incorporation by reference.

(a) Certain material is incorporated by reference into this part with the approval of the Director of the Federal Register under 5 U.S.C. 552(a) and 1 CFR part 51. To enforce any edition other than that specified in this section, the Environmental Protection Agency (EPA) must publish notice of change in the FEDERAL REGISTER and the material must be available to the public. All approved material is available for inspection at the National Archives and Records Administration (NARA). For information on the availability of this material at NARA, call 202–741–6030 or go to: *http://www/archives.gov/federal_register/code_of_federal_regulations/ibr_locations.html*. This material is also available for inspection at the EPA Docket Center, Docket No. EPA–HQ–OAR–2005–0161, EPA/DC, EPA West, Room 3334, 1301 Constitution Ave., NW., Washington DC. The telephone number for the Air Docket is (202) 566–1742. Also, this material is available from the source listed in paragraph (b) of this section.

(b) American Society for Testing and Materials, 100 Barr Harbor Drive, P.O. Box C–700, West Conshohocken, Pennsylvania 19428 (1–800–262–1373, *www.astm.org*).

(1) ASTM D 1250–08 (''ASTM D 1250''), Standard Guide for Use of the Petroleum Measurement Tables, Approved 2008; IBR approved for § 80.1426(f)(8)(ii)(B).

(2) ASTM D 4442–07 (''ASTM D 4442''), Standard Test Methods for Direct Moisture Content Measurement of Wood and Wood-Base Materials, Approved 2007; IBR approved for § 80.1426(f)(7)(v)(B).

(3) ASTM D 4444–08 (''ASTM D 4444''), Standard Test Method for Laboratory Standardization and Calibration of Hand-Held Moisture Meters, Approved 2008; IBR approved for § 80.1426(f)(7)(v)(B).

(4) ASTM D 6751–09 (''ASTM D 6751''), Standard Specification for Biodiesel Fuel Blend Stock (B100) for Middle Distillate Fuels, Approved 2009; IBR approved for § 80.1401.

(5) ASTM D 6866–08 (''ASTM D 6866''), Standard Test Methods for Determining the Biobased Content of Solid, Liquid, and Gaseous Samples Using Radiocarbon Analysis, Approved 2008; IBR approved for §§ 80.1426(f)(9)(ii) and 80.1430(e)(2).

(6) ASTM E 711–87 (''ASTM E 711''), Standard Test Method for Gross Calorific Value of Refuse-Derived Fuel by the Bomb Calorimeter, Reapproved 2004; IBR approved for § 80.1426(f)(7)(v)(A).

(7) ASTM E 870–82 (''ASTM E 870''), Standard Test Methods for Analysis of Wood Fuels, Reapproved 2006); IBR approved for § 80.1426(f)(7)(v)(A).

APPENDIX A TO PART 80—TEST FOR THE DETERMINATION OF PHOSPHORUS IN GASOLINE

1. Scope.

1.1 This method was developed for the determination of phosphorus generally present as pentavalent phosphate esters or salts, or both, in gasoline. This method is applicable for the determination of phosphorus in the range from 0.0008 to 0.15 g P/U.S. gal, or 0.2 to 49 mg P/liter.

2. Applicable documents.

2.1 ASTM Standards:

D 1100 Specification for Filter Paper for Use in Chemical Analysis.

3. Summary of method.

3.1 Organic matter in the sample is decomposed by ignition in the presence of zinc oxide. The residue is dissolved in sulfuric acid and reacted with ammonium molybdate and hydrazine sulfate. The absorbance of the ''Molybdenum Blue'' complex is proportional to the phosphorus concentration in the sample and is read at approximately 820 nm in a 5-cm cell.

4. Apparatus.

4.1 Buret, 10-ml capacity, 0.05-ml subdivisions.

4.2 Constant-Temperature Bath, equipped to hold several 100-ml volumetric flasks submerged to the mark. Bath must have a large enough reservoir or heat capacity to keep the temperature at 180 to 190 °F (82.2 to 87.8 °C) during the entire period of sample heating.

NOTE 1: If the temperature of the hot water bath drops below 180 °F (82.2 °C) the color development may not be complete.

4.3 Cooling Bath, equipped to hold several 100-ml volumetric flasks submerged to the mark in ice water.

4.4 Filter Paper, for quantitative analysis, Class G for fine precipitates as defined in Specification D 1100.

4.5 Ignition Dish—Coors porcelain evaporating dish, glazed inside and outside, with pourout (size no. 00A, diameter 75 mm. capacity 70 ml).

4.6 Spectrophotometer, equipped with a tungsten lamp, a red-sensitive phototube capable of operating at 830 nm and with absorption cells that have a 5-cm light path.

4.7 Thermometer, range 50 to 220 °F (10 to 105 °C).

4.8 Volumetric Flask, 100-ml with ground-glass stopper.

4.9 Volumetric Flask, 1000-ml with ground-glass stopper.

4.10 Syringe, Luer-Lok, 10-ml equipped with 5-cm. 22-gage needle.

5. Reagents.

5.1 Purity of Reagents—Reagent grade chemicals shall be used in all tests. Unless otherwise indicated, it is intended that all reagents shall conform to the specifications of the Committee on Analytical Reagents of the American Chemical Society, where such specifications are available. Other grades may be used, provided it is first ascertained that the reagent is of sufficiently high purity to permit its use without lessening the accuracy of the determination.

5.2 Purity of Water—Unless otherwise indicated, references to water shall be understood to mean distilled water or water of equal purity.

5.3 Ammonium Molybdate Solution—Using graduated cylinders for measurement add slowly (Note 2), with continuous stirring, 225 ml of concentrated sulfuric acid to 500 ml of water contained in a beaker placed in a bath of cold water. Cool to room temperature and

add 20 g of ammonium molybdate tetrahydrate ($(NH_4)_6 Mo_7 O_{24} \cdot 4H_2 O$). Stir until solution is complete and transfer to a 1000-ml flask. Dilute to the mark with water.

NOTE 2: Wear a face shield, rubber gloves, and a rubber apron when adding concentrated sulfuric acid to water.

5.4 Hydrazine Sulfate Solution—Dissolve 1.5 of hydrazine sulfate ($H_2 NNH_2 \cdot H_2 SO_4$) in 1 litre of water, measured with a graduated cylinder.

NOTE 3: This solution is not stable. Keep it tightly stoppered and in the dark. Prepare a fresh solution after 3 weeks.

5.5 Molybdate-Hydrazine Reagent—Pipet 25 ml of ammonium molybdate solution into a 100-ml volumetric flask containing approximately 50 ml of water, add by pipet 10 ml of $N_2 NNH_2 \cdot H_2 SO_4$ solution, and dilute to 100 ml with water.

NOTE 4: This reagent is unstable and should be used within about 4 h. Prepare it immediately before use. Each determination (including the blank) uses 50 ml.

5.6 Phosphorus, Standard Solution (10.0 μg P/ml)—Pipet 10 ml of stock standard phosphorus solution into a 1000-ml volumetric flask and dilute to the mark with water.

5.7 Phosphorus, Stock Standard Solution (1.00 mg P/ml)—Dry approximately 5 g of potasium dihydrogen phosphate ($KH_2 PO_4$ in an oven at 221 to 230 °F (105 to 110 °C) for 3 h. Dissolve 4.393 ±0.002 g of the reagent in 150 ml, measured with a graduated cylinder, of $H_2 SO_4$(1+10) contained in a 1000-ml volumetric flask. Dilute with water to the mark.

5.8 Sulfuric Acid (1+10)—Using graduated cylinders for measurement add slowly (Note 2), with continuous stirring, 100-ml of concentrated sulfuric acid ($H_2 SO_4$, sp gr 1.84) to 1 litre of water contained in a beaker placed in a bath of cold water.

5.9 Zinc Oxide.

NOTE 5: High-bulk density zinc oxide may cause spattering. Density of approximately 0.5 g/cm^3 has been found satisfactory.

6. Calibration.

6.1 Transfer by buret, or a volumetric transfer pipet, 0.0, 0.5, 1.0, 1.5, 2.0, 3.0, 3.5, and 4.0 ml of phosphorus standard solution into 100-ml volumetric flasks.

6.2 Pipet 10 ml of $H_2 SO_4$ (1+10) into each flask. Mix immediately by swirling.

6.3 Prepare the molybdate-hydrazine solution. Prepare sufficient volume of reagent based on the number of samples being analyzed.

6.4 Pipet 50 ml of the molybdate-hydrazine solution to each volumetric flask. Mix immediately by swirling.

6.5 Dilute to 100 ml with water.

6.6 Mix well and place in the constant-temperature bath so that the contents of the flask are submerged below the level of the bath. Maintain bath temperature at 180 to 190 °F (82.2 to 87.8 °C) for 25 min (Note 1).

6.7 Transfer the flask to the cooling bath and cool the contents rapidly to room temperature. Do not allow the samples to cool more than 5 °F (2.8 °C) below room temperature.

NOTE 6: Place a chemically clean thermometer in one of the flasks to check the temperature.

6.8 After cooling the flasks to room temperature, remove them from the cooling water bath and allow them to stand for 10 min. at room temperature.

6.9 Using the 2.0-ml phosphorus standard in a 5-cm cell, determine the wavelength near 820 nm that gives maximum absorbance. The wavelength giving maximum absorbance should not exceed 830 nm.

6.9.1 Using a red-sensitive phototube and 5-cm cells, adjust the spectrophotometer to zero absorbance at the wavelength of maximum absorbance using distilled water in both cells. Use the wavelength of maximum absorbance in the determination of calibration readings and future sample readings.

6.9.2 The use of 1-cm cells for the higher concentrations is permissible.

6.10 Measure the absorbance of each calibration sample including the blank (0.0 ml phosphorus standard) at the wavelength of maximum absorbance with distilled water in the reference cell.

NOTE 7: Great care must be taken to avoid possible contamination. If the absorbance of the blank exceeds 0.04 (for 5-cm cell), check for source of contamination. It is suggested that the results be disregarded and the test be rerun with fresh reagents and clean glassware.

6.11 Correct the absorbance of each standard solution by subtracting the absorbance of the blank (0 ml phosphorus standard).

6.12 Prepare a calibration curve by plotting the corrected absorbance of each standard solution against micrograms of phosphorus. One millilitre of phosphorus standard solution provides 10 μg of phosphorus.

7. Sampling.

7.1 Selection of the size of the sample to be tested depends on the expected concentration of phosphorous in the sample. If a concentration of phosphorus is suspected to be less than 0.0038 g/gal (1.0 mg/litre), it will be necessary to use 10 ml of sample.

NOTE 8: Two grams of zinc oxide cannot absorb this volume of gasoline. Therefore the 10-ml sample is ignited in aliquots of 2 ml in the presence of 2 g of zinc oxide.

7.2 The following table serves as a guide for selecting sample size:

Phosphorus, milligrams per liter	Equivalent, grams per gallon	Sample size, milliliter
2.5 to 40	0.01 to 0.15	1.00
1.3 to 20	0.005 to 0.075	2.00
0.9 to 13	0.0037 to 0.05	3.00
1 or less	0.0038 or less	10.00

8. Procedure.

8.1 Transfer 2 ±0.2 g of zinc oxide into a conical pile in a clean, dry, unetched ignition dish.

NOTE 9: In order to obtain satisfactory accuracy with the small amounts of phosphorus involved, it is necessary to take extensive precautions in handling. The usual precautions of cleanliness, careful manipulation, and avoidance of contamination should be scrupulously observed; also, all glassware should be cleaned before use, with cleaning acid or by some procedure that does not involve use of commercial detergents. These compounds often contain alkali phosphates which are strongly adsorbed by glass surfaces and are not removed by ordinary rinsing. It is desirable to segregate a special stock of glassware for use only in the determination of phosphorus.

8.2 Make a deep depression in the center of the zinc oxide pile with a stirring rod.

8.3 Pipet the gasoline sample (Note 10) (see 7.2 for suggested sample volume) into the depression in the zinc oxide. Record the temperature of the fuel if the phosphorus content is required at 60 °F (15.6 °C) and make correction as directed in 9.2.

NOTE 10: For the 10-ml sample use multiple additions and a syringe. Hold the tip of the needle at approximately ⅔ of the depth of the zinc oxide layer and slowly deliver 2 ml of the sample: fast sample delivery may give low results. Give sufficient time for the gasoline to be absorbed by the zinc oxide. Follow step 8.6. Cool the dish to room temperature. Repeat steps 8.3 and 8.6 until all the sample has been burned. Safety—cool the ignition dish before adding the additional aliquots of gasoline to avoid a flash fire.

8.4 Cover the sample with a small amount of fresh zinc oxide from reagent bottle (use the tip of a small spatula to deliver approximately 0.2 g). Tap the sides of the ignition dish to pack the zinc oxide.

8.5 Prepare the blank, using the same amount of zinc oxide in an ignition dish.

8.6 Ignite the gasoline, using the flame from a bunsen burner. Allow the gasoline to burn to extinction (NOTE 10).

8.7 Place the ignition dishes containing the sample and blank in a hot muffle furnace set at a temperature of 1150 to 1300 °F (621 to 704 °C) for 10 min. Remove and cool the ignition dishes. When cool gently tap the sides of the dish to loosen the zinc oxide. Again place the dishes in the muffle furnace for 5 min. Remove and cool the ignition dishes to room temperature. The above treatment is usually sufficient to burn the carbon. If the carbon is not completely burned off place the dish into the oven for further 5-min. periods.

NOTE 11: Step 8.7 may also be accomplished by heating the ignition dish with a Meker burner gradually increasing the intensity of heat until the carbon from the sides of the dish has been burned, then cool to room temperature.

8.8 Pipet 25 ml of H_2SO_4 (1+10) to each ignition dish. While pipeting, carefully wash all traces of zinc oxide from the sides of the ignition dish.

8.9 Cover the ignition dish with a borosilicate watch glass and warm the ignition dish on a hot plate until the zinc oxide is completely dissolved.

8.10 Transfer the solution through filter paper to a 100-ml volumetric flask. Rinse the watch glass and the dish several times with distilled water (do not exceed 25 ml) and transfer the washings through the filter paper to the volumetric flask.

8.11 Prepare the molybdate-hydrazine solution.

8.12 Add 50 ml of the molybdate-hydrazine solution by pipet to each 100-ml volumetric flask. Mix immediately by swirling.

8.13 Dilute to 100 ml with water and mix well. Remove stoppers from flasks after mixing.

8.14 Place the 100-ml flasks in the constant-temperature bath for 25 min. so that the contents of the flasks are below the liquid level of the bath. The temperature of the bath should be 180 to 190 °F (82.2 to 87.8 °C) (NOTE 1).

8.15 Transfer the 100-ml flasks to the cooling bath and cool the contents rapidly to room temperature (NOTE 6).

8.16 Allow the samples to stand at room temperature before measuring the absorbance.

NOTE 12: The color developed is stable for at least 4 h.

8.17 Set the spectrophotometer to the wavelength of maximum absorbance as determined in 6.9. Adjust the spectrophotometer to zero absorbance, using distilled water in both cells.

8.18 Measure the absorbance of the samples at the wavelength of maximum absorbance with distilled water in the reference cell.

8.19 Subtract the absorbance of the blank from the absorbance of each sample (NOTE 7).

8.20 Determine the micrograms of phosphorous in the sample, using the calibration curve from 6.12 and the corrected absorbance.

9. Calculations.

9.1 Calculate the milligrams of phosphorus per litre of sample as follows:

P, mg/litre = P/V

where:

P = micrograms of phosphorus read from calibration curve, and

V = millilitres of gasoline sample.

To convert to grams of phosphorus per U.S. gallon of sample, multiply mg P/litre by 0.0038.

9.2 If the gasoline sample was taken at a temperature other than 60 °F (15.6 °C) make the following temperature correction:

mg P/litre at 15.6 °C = [mg P/litre at t] [1+0.001 (t−15.6)]

where:

t = observed temperature of the gasoline, °C.

9.3 Concentrations below 2.5 mg/litre or 0.01 g/gal should be reported to the nearest 0.01 mg/litre or 0.0001 g/U.S. gal.

9.3.1 For higher concentrations, report results to the nearest 1 mg P/litre or 0.005 g P/U.S. gal.

10. Precision.

10.1 The following criteria should be used for judging the acceptability of results (95 percent confidence):

10.2 Repeatability—Duplicate results by the same operator should be considered suspect if they differ by more than the following amounts:

g P/U.S. gal (mg·P/litre)	Repeatability
0.0008 to 0.005 (0.2 to 1.3) ..	0.0002 g P/U.S. gal (0.05 mg P/litre).
0.005 to 0.15 (1.3 to 40)	7% of the mean.

10.3 Reproducibility—The results submitted by each of two laboratories should not be considered suspect unless they differ by more than the following amounts:

g P/U.S. gal (mg·P/litre)	Reproducibility
0.0008 to 0.005 (0.2 to 1.3) ..	0.0005 g P/U.S. gal (0.13 mg P/litre).
0.005 to 0.15 (1.3 to 40)	13% of the mean.

[39 FR 24891, July 8, 1974; 39 FR 25653, July 12, 1974]

APPENDIX B TO PART 80—TEST METHODS FOR LEAD IN GASOLINE

METHOD 1—STANDARD METHOD TEST FOR LEAD IN GASOLINE BY ATOMIC ABSORPTION SPECTROMETRY

1. Scope.

1.1. This method covers the determination of the total lead content of gasoline. The procedure's calibration range is 0.010 to 0.10 gram of lead/U.S. gal. Samples above this level should be diluted to fall within this range or a higher level calibration standard curve must be prepared. The higher level curve must be shown to be linear and measurement of lead at these levels must be shown to be accurate by the analysis of control samples at a higher level of alkyl lead content. The method compensates for variations in gasoline composition and is independent of lead alkyl type.

2. Summary of method.

2.1 The gasoline sample is diluted with methyl isobutyl ketone and the alkyl lead compounds are stabilized by reaction with iodine and a quarternary ammonium salt. The lead content of the sample is determined by atomic absorption flame spectrometry at 2833 A, using standards prepared from reagent grade lead chloride. By the use of this treatment, all alkyl lead compounds give identical response.

3. Apparatus.

3.1 Atomic Absorption Spectometer, capable of scale expansion and nebulizer adjustment, and equipped with a slot burner and premix chamber for use with an air-acetylene flame.

3.2 Volumetric Flasks, 50-ml, 100-ml, 250-ml, and one litre sizes.

3.3 Pipets, 2-ml, 5-ml, 10-ml, 20-ml, and 50-ml sizes.

3.4 Micropipet, 100-µl, Eppendorf type or equivalent.

4. Reagents.

4.1 Purity of Reagents—Reagent grade chemicals shall be used in all tests. Unless otherwise indicated, it is intended that all reagents shall conform to the specifications of the Committee on Analytical Reagents of the American Chemical Society, where such specifications are available. Other grades may be used, provided it is first ascertained that the reagent is of sufficiently high purity to permit its use without lessening the accuracy of the determination.

4.2 Purity of Water—Unless otherwise indicated, references to water shall be understood to mean distilled water or water of equal purity.

4.3 Aliquat 336 (tricapryl methyl ammonium chloride).

4.4 Aliquat 336/MIBK Solution (10 percent v/v)—Dissolve and dilute 100 ml (88.0 g) of Aliquat 336 with MIBK to one liter.

4.5 Aliquat 336/MIBK Solution (1 percent v/v)—Dissolve and dilute 10 ml (8.8 g) of Aliquat 336 with MIBK to one liter.

4.6 Iodine Solution—Dissolve and dilute 3.0 g iodine crystals with Toluene to 100 ml.

4.7 Lead Chloride.

4.8 Lead-Sterile Gasoline—Gasoline containing less than 0.005 g Pb/gal.

4.9 Lead, Standard Solution (5.0 g Pb/gal)—Dissolve 0.4433 g of lead chloride ($PbCl_2$) previously dried at 105 °C for 3 h in about 200 ml

of 10 percent Aliquat 336/MIBK solution in a 250-ml volumetric flask. Dilute to the mark with the 10 percent Aliquat solution, mix, and store in a brown bottle having a polyethylene-lined cap. This solution contains 1,321 µg Pb/ml, which is equivalent to 5.0 g Pb/gal.

4.10 Lead, Standard Solution (1.0 g Pb/gal)—By means of a pipet, accurately transfer 50.0 ml of the 5.0 g Pb/gal solution to a 250-ml volumetric flask, dilute to volume with 1 percent Aliquat/MIBK solution. Store in a brown bottle having a polyethylene-lined cap.

4.11 Lead, Standard Solutions (0.02, 0.05, and 0.10 g Pb/gal)—Transfer accurately by means of pipets 2.0, 5.0, and 10.0 ml of the 1.0-g Pb/gal solution to 100-ml volumetric flasks; add 5.0 ml of 1 percent Aliquat 336 solution to each flask; dilute to the mark with MIBK. Mix well and store in bottles having polyethylene-lined caps.

4.12 Methyl Isobutyl Ketone (MIBK). (4-methyl-2-pentanone).

5. Calibration.

5.1 Preparation of Working Standards—Prepare three working standards and a blank using the 0.02, 0.05, and 0.10-g Pb/gal standard lead solutions described in 4.11.

5.1.1 To each of four 50-ml volumetric flasks containing 30 ml of MIBK, add 5.0 ml of low lead standard solution and 5.0 ml of lead-free gasoline. In the case of the blank, add only 5.0 ml of lead-free gasoline.

5.1.2 Add immediately 0.1 ml of iodine/toluene solution by means of the 100-µl Eppendorf pipet. Mix well.[1]

5.1.3 Add 5 ml of 1 percent Aliquat 336 solution and mix.

5.1.4 Dilute to volume with MIBK and mix well.

5.2 Preparation of Instrument—Optimize the atomic absorption equipment for lead at 2833 A. Using the reagent blank, adjust the gas mixture and the sample aspiration rate to obtain an oxidizing flame.

5.2.1 Aspirate the 0.1-g Pb/gal working standard and adjust the burner position to give maximum response. Some instruments require the use of scale expansion to produce a reading of 0.150 to 0.170 for this standard.

5.2.2 Aspirate the reagent blank to zero the instrument and check the absorbances of the three working standards for linearity.

6. Procedure.

6.1 To a 50 ml volumetric flask containing 30 ml MIBK, add 5.0 ml of gasoline sample and mix.[2]

[1] EPA practice will be to mix well by shaking vigorously for approximately one minute.

[2] The gasoline should be allowed to come to room temperature (25 °C).

6.1.1 Add 0.10 ml (100 µl) of iodine/toluene solution and allow the mixture to react about 1 minute.[3]

6.1.2 Add 5.0 ml of 1 percent Aliquot 336/MIBK solution and mix.

6.1.3 Dilute to volume with MIBK and mix.

6.2 Aspirate the samples and working standards and record the absorbance values with frequent checks of the zero.

6.3 Any sample resulting in a peak greater than 0.05 g Pb/gal will be run in duplicate. Samples registering greater than 0.10 g Pb/gal should be diluted with iso-octane or unleaded fuel to fall within the calibration range or a higher level calibration standard curve must be prepared. The higher level curve must be shown to be linear and measurement of lead at these levels must be shown to be accurate by the analysis of control samples at a higher level of alkyl lead content.

7. Calculations.

7.1 Plot the absorbance values versus concentration represented by the working standards and read the concentrations of the samples from the graph.

8. Precision.

8.1 The following criteria should be used for judging the acceptability of results (95 percent confidence):

8.1.1 Repeatability—Duplicate results by the same operator should be considered suspect if they differ by more than 0.005 g/gal.

8.1.2 Reproductibility—The results submitted by each of two laboratories should not be considered suspect unless the two results differ by more than 0.01 g/gal.

METHOD 2—AUTOMATED METHOD TEST FOR LEAD IN GASOLINE BY ATOMIC ABSORPTION SPECTROMETRY

1. Scope and application.

1.1 This method covers the determination of the total lead content of gasoline. The procedure's calibration range is 0.010 to 0.10 gram of lead/U.S. gal. Samples above this level should be diluted to fall within this range or a higher level calibration standard curve must be prepared. The higher level curve must be shown to be linear and measurement of lead at these levels must be shown to be accurate by the analysis of control samples at a higher level of alkyl lead content. The method compensates for variations in gasoline composition and is independent of lead alkyl type.

1.2 This method may be used as an alternative to the Standard Method set forth above.

[3] See footnote 1 of section 5.1.2.

1.3 Where trade names or specific products are noted in the method, equivalent apparatus and chemical reagents may be used. Mention of trade names or specific products is for the assistance of the user and does not constitute endorsement by the U.S. Environmental Protection Agency.

2. Summary of method.

2.1 The gasoline sample is diluted with methly isobutyl ketone (MIBK) and the alkyl lead compounds are stabilized by reacting with iodine and a quarternary ammonium salt. An automated system is used to perform the diluting and the chemical reactions and feed the products to the atomic absorption spectrometer with an air-acetylene flame.

2.2 The dilution of the gasoline with MIBK compensates for severe non-atomic absorption, scatter from unburned carbon containing species and matrix effects caused in part by the burning characteristics of gasoline.

2.3 The *in-situ* reaction of alkyl lead in gasoline with iodine eliminates the problem of variations in response due to different alkyl types by leveling the response of all alkyl lead compounds.

2.4 The addition of the quarternary ammonium salt improves response and increases the stability of the alkyl iodide complex.

3. Sample handling and preservation.

3.1 Samples should be collected and stored in containers which will protect them from changes in the lead content of the gasoline such as from loss of volatile fractions of the gasoline by evaporation or leaching of the lead into the container or cap.

3.2 If samples have been refrigerated they should be brought to room temperature prior to analysis.

4. Apparatus.

4.1 AutoAnalyzer system consisting of:

4.1.1 Sampler 20/hr cam, 30/hr cam.

4.1.2 Proportioning pump.

4.1.3 Lead in gas manifold.

4.1.4 Disposable test tubes.

4.1.5 Two 2-liter and one 0.5 liter Erlenmeyer solvent displacement flasks. Alternatively, high pressure liquid chromatography (HPLC) or syringe pumps may be used.

4.2 Atomic Absorption Spectroscopy (AAS) Detector System consisting of:

4.2.1 Atomic absorption spectrometer.

4.2.2 10″ strip chart recorder.

4.2.3 Lead hollow cathode lamp or electrodeless discharge lamp (EDL).

5. Reagents.

5.1 Aliquat 336/MIBK solution (10% v/v): Dissolve and dilute 100 ml (88.0 g) of Aliquat 336 (Aldrich Chemical Co., Milwaukee, Wisconsin) with MIBK (Burdick & Jackson Lab., Inc., Muskegon, Michigan) to one liter.

5.2 Aliquat 336/iso-octane solution (1% v/v): Dissolve and dilute 10 ml (8.8 g) of Alquat 336 (reagent 5.1) with iso-octane to one liter.

5.3 Iodine solution (3% w/v): Dissolve and dilute 3.0 g iodine crystals (American Chemical Society) with toluene (Burdick & Jackson Lab., Inc., Muskegon, Michigan) to 100 ml.

5.4 Iodine working solution (0.24% w/v): Dilute 8 ml of reagent 5.3 to 100 ml with toluene.

5.5 Methyl isobutyl ketone (MIBK) (4-methlyl-2-pentanone).

5.6 Certified unleaded gasoline (Phillips Chemical Co., Borger, Texas) or iso-octane (Burdick & Jackson Lab, Inc., Muskegon, Michigan).

6. Calibration standards.

6.1 Stock 5.0 g Pb/gal Standard:

Dissolve 0.4433 gram of lead chloride ($PbCl_2$) previously dried at 105 °C for 3 hours in 200 ml of 10% v/v Aliquat 336/MIBK solution (reagent 5.1) in a 250 ml volumetric flask. Dilute to volume with reagent 5.1 and store in an amber bottle.

6.2 Intermediate 1.0 g Pb/gal Standard:

Pipet 50 ml of the 5.0 g Pb/gal standard into a 250 ml volumetric flask and dilute to volume with a 1% v/v Aliquat 336/iso-octane solution (reagent 5.2). Store in an amber bottle.

6.3 Working 0.02, 0.05, 0.10 g Pb/gal Standards:

Pipet 2.0, 5.0, and 10.0 ml of the 1.0 g Pb/gal solution to 100 ml volumetric flasks. Add 5 ml of a 1% Aliquat 336/iso-octane solution to each flask. Dilute to volume with iso-octane. These solutions contain 0.02, 0.05, and 0.10 g Pb/gal in a 0.05% Aliquat 336/iso-octane solution.

7. AAS Instrumental conditions.

7.1 Lead hollow cathode lamp.

7.2 Wavelength: 283.3 nm.

7.3 Slit: 4 (0.7mm).

7.4 Range: UV.

7.5 Fuel: Acetylene (approx. 20 ml/min at 8 psi).

7.6 Oxidant: Air (approx. 65 ml/min at 31 psi).

7.7 Nebulizer: 5.2 ml/min.

7.8 Chart speed: 10 in/hr.

8. Procedures.

8.1 AAS start-up.

8.1.1 Assure that instrumental conditions have been optimized and aligned according to Section 7 and the instrument has had substantial time for warm-up.

8.2 Auto Analyzer start-up [see figure 1].

8.2.1 Check all pump tubing and replace as necessary. Iodine tubing should be changed

daily. All pump tubing should be replaced after one week of use. Place the platen on the pump.

8.2.2 Withdraw any water from the sample wash cup and fill with certified unleaded gasoline (reagent 5.6).

8.2.3 Fill the 2-liter MIBK dilution displacement Erlenmeyer flask (reagent 5.5) and the 0.5 liter Aliquat 336/MIBK 1% v/v (reagent 5.2) displacement flask and place the rubber stopper glass tubing assemblies in their respective flasks.

8.2.4 Fill a 2-liter Erlenmeyer flask with distilled water. The water will be used to displace the solvents. Therefore, place the appropriate lines in this flask. This procedure is not relevant if syringe pumps are used.

8.2.5 Fill the final debubbler reverse displacement 2-liter Erlenmeyer flask with distilled water and place the rubber stopper glass tubing assembly in the flask.

8.2.6 Place the appropriate lines for the iodine reagent (reagent 5.4) and the wash solution (reagent 5.6) in their respective bottles.

8.2.7 Start the pump and connect the aspiration line from the manifold to the AAS.

8.2.8 Some initial checks to assure that the reagents are being added are:

a. A good uniform bubble pattern.

b. Yellow color evident due to iodine in the system.

c. No surging in any tubing.

8.3 Calibration.

8.3.1 Turn the chart drive on and obtain a steady baseline.

8.3.2 Load standards and samples into sample tray.

8.3.3 Start the sampler and run the standards (Note: first check the sample probe positioning with an empty test tube).

8.3.4 Check the linearity of calibration standards response and slope by running a least squares fit. Check these results against previously obtained results. They should agree within 10%.

8.3.5 If the above is in control then start the sample analysis.

8.4 Sample Analysis.

8.4.1 To minimize gasoline vapor in the laboratory, load the sample tray about 5–10 test tubes ahead of the sampler.

8.4.2 Record the sample number on the strip chart corresponding to the appropriate peak.

8.4.3 Every ten samples run the high calibration standard and a previously analyzed sample (duplicate). Also let the sampler skip to check the baseline.

8.4.4 After an acceptable peak (within the calibration range) is obtained, pour the excess sample from the test tube into the waste gasoline can.

8.4.5 Any sample resulting in a peak greater than 0.05 g Pb/gal will be run in duplicate. Samples registering greater than 0.10 g Pb/gal should be diluted with iso-octane or unleaded fuel to fall within the calibration range or a higher level calibration standard curve must be prepared. The higher level curve must be shown to be linear and measurement of lead at these levels must be shown to be accurate by the analysis of control samples at a higher level of alkyl lead content.

8.5 Shut Down.

8.5.1 Replace the solvent displacement flask with flasks filled with distilled water. Also place all other lines in a beaker of distilled water. Rinse the system with distilled water for 15 minutes.

8.5.2 Withdraw the gasoline from the wash cup and fill with water.

8.5.3 Dispose of all solvent waste in waste glass bottles.

8.5.4 Turn the AAS off after extinguishing the flame. Also turn the recorder and pump off. Remove the platen and release the pump tubing.

8.5.5 Shut the acetylene off at the tank and bleed the line.

9. Quality control.

9.1 Precision.

9.1.1 All duplicate results should be considered suspect if they differ by more than 0.005 g Pb/gal.

9.2 Accuracy.

9.2.1 All quality control standard checks should agree within 10% of the nominal value of the standard.

9.2.2 All spikes should agree within 10% of the known addition.

10. Past quality control data.

10.1 Precision.

10.1.1 Duplicate analysis for 156 samples in a single laboratory has resulted in an average difference of 0.00011 g Pb/gal with a standard deviation of 0.0023.

10.1.2 Replicate analysis in a single laboratory (greater than 5 determinations) of samples at concentrations of 0.010, 0.048, and 0.085 g Pb/gal resulted in relative standard deviations of 4.2%, 3.5%, and 3.3% respectively.

10.2 Accuracy.

10.2.1 The analysis of National Bureau of Standards (NBS) lead in reference fuel of known concentrations in a single laboratory has resulted in found values deviating from the true value for 11 determinations of 0.0322 g Pb/gal by an average of 0.56% with a standard deviation of 6.8%, for 15 determinations of 0.0519 g Pb/gal by an average of -1.1% with a standard deviation of 5.8%, and for 7 determinations of 0.0725 g Pb/gal by an average of 3.5% with a standard deviation of 4.8%.

10.2.2 Twenty-three analyses of blind reference samples in a single laboratory (U.S.

EPA, RTP, N.C.) have resulted in found values differing from the true value by an average of -0.0009 g Pb/gal with a standard deviation of 0.004.

10.2.3 In a single laboratory, the average percent recovery of 108 spikes made to samples was 101% with a standard deviation of 5.6%.

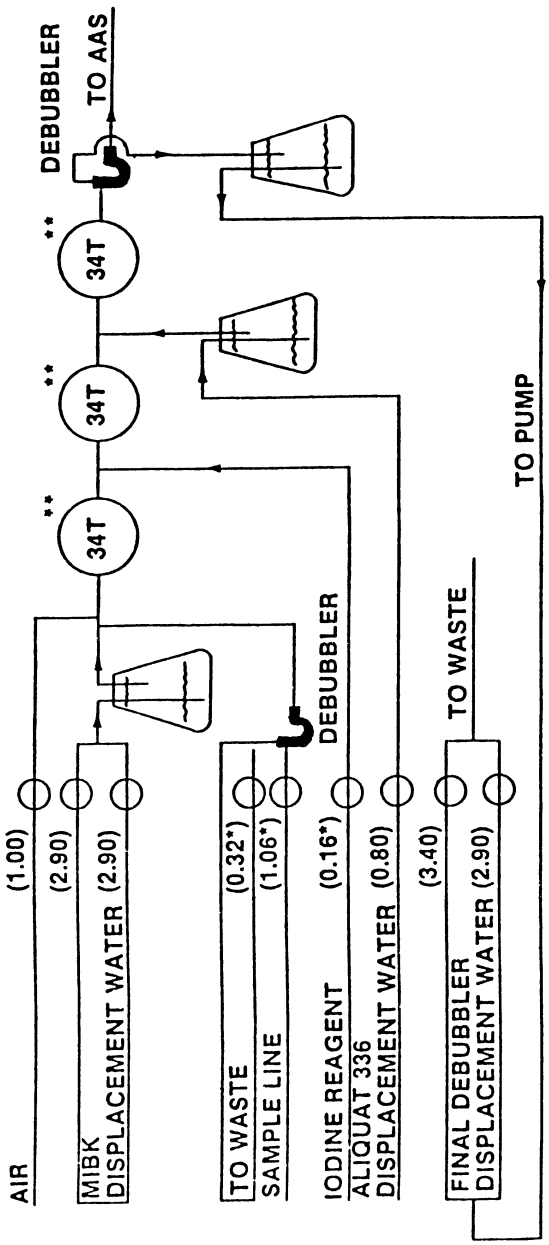

Figure 1

Flow Diagram for the Automated System. (*: Solvaflex pump tubing, **: Technicon part no. 157-0225) Numbers in parentheses refer to the flow rate (ml/min.).

METHOD 3—TEST FOR LEAD IN GASOLINE BY X-RAY SPECTROMETRY

1. Scope and application.

1.1 This method covers the determination of the total lead content of gasoline. The procedure's calibration range is 0.010 to 5.0 grams of lead/U.S. gallon. Samples above this level should be diluted to fall within the range of 0.05 to 5.0 grams of lead/U.S. gallon. The method compensates for variations in gasoline composition and is independent of lead alkyl type.

1.2 This method may be used as an alternative to Method 1—Standard Method Test for Lead in Gasoline by Atomic Absorption Spectrometry, or to Method 2—Automated Method Test for Lead in Gasoline by Atomic Absorption Spectrometry.

1.3 Where trade names or specific products are noted in the method, equivalent apparatus and chemical reagents may be used. Mention of trade names or specific products is for the assistance of the user and does not constitute endorsement by the U.S. Environmental Protection Agency.

2. Summary of method.

2.1 A portion of the gasoline sample is placed in an appropriate holder and loaded into an X-ray spectrometer. The ratio of the net X-ray intensity of the lead L alpha radiation to the net intensity of the incoherently scattered tungsten L alpha radiation is measured. The lead content is determined by reference to a linear calibration equation which relates the lead content to the measured ratio.

2.2 The incoherently scattered tungsten radiation is used to compensate for variations in gasoline samples.

3. Sample handling and preservation.

3.1 Samples should be collected and stored in containers which will protect them from changes in the lead content of the gasoline, such as loss of volatile fractions of the gasoline by evaporation or leaching of the lead into the container or cap.

3.2 If samples have been refrigerated they should be brought to room temperature prior to analysis.

3.3 Gasoline is extremely flammable and should be handled cautiously and with adequate ventilation. The vapors are harmful if inhaled and prolonged breathing of vapors should be avoided. Skin contact should be minimized. See precautionary statements in Annex A1.3.

4. Apparatus.

4.1 X-ray Spectrometer, capable of exciting and measuring the fluorescence lines mentioned in 2.1 and of being operated under the following instrumental conditions or others giving equivalent results: a tungsten target tube operated at 50 kV, a lithium fluoride analyzing crystal, an air or helium optical path and a proportional or scintillation detector.

4.2 Some manufacturers of X-ray Spectrometer units no longer allow use of air as the beam path medium because the X-ray beam produces ozone, which may degrade seals and electronics. In addition, use of the equipment with liquid gasoline in close proximity to the hot X-ray tube could pose flammability problems with any machine in case of a rupture of the sample container. Therefore, use of the helium alternative is recommended.

5. Reagents.

5.1 Isooctane. Isooctane is flammable and the vapors may be harmful. See precautions in Annex A1.1.

5.2 Lead standard solution, in isooctane, toluene or a mixture of these two solvents, containing approximately 5 gm Pb/U.S. gallon may be prepared from a lead-in-oil concentrate such as those prepared by Conostan (Conoco, Inc., Ponca City, Oklahoma). Isooctane and toluene are flammable and the vapors may be harmful. See precautionary statements in Annex A1.1 and A1.2.

6. Calibration.

6.1 Make exact dilutions with isooctane of the lead standard solution to give solutions with concentrations of 0.01, 0.05, 0.10, 0.50, 1.0, 3.0 and 5.0 g Pb/U.S. gallon. If a more limited range is desired as required for linearity, such range shall be covered by at least five standard solutions approximately equally spaced and this range shall not be exceeded by any of the samples. Place each of the standard solutions in a sample cell using techniques consistent with good operating practice for the spectrometer employed. Insert the sample in the spectrometer and allow the spectrometer atmosphere to reach equilibrium (if appropriate). Measure the intensity of the lead L alpha peak at 1.175 angstroms, the Compton scatter peak of the tungsten L alpha line at 1.500 angstroms and the background at 1.211 angstroms. Each measured intensity should exceed 200,000 counts or the time of measurement should be at least 30 seconds. The relative standard deviation of each measurement, based on counting statistics, should be one percent or less. The Compton scatter peak given above is for 90° instrument geometry and should be changed for other geometries. The Compton scatter peak (in angstroms) is found at the wavelength of the tungsten L alpha line plus 0.024 (1-cos phi), where phi is the angle between the incident radiation and the take-off collimator.

6.2 For Each of the standards, as well as for an isooctane blank, determine the net lead intensity by subtracting the corrected

background from the gross intensity. Determine the corrected background by multiplying the intensity of the background at 1.211 angstroms by the following ratio obtained on an isooctane blank:

$$\frac{\text{Background at 1.175 angstroms}}{\text{Background at 1.211 angstroms}}$$

6.3 Determine the corrected lead intensity ratio, which is the net lead intensity corrected for matrix effects by division by the net incoherently scattered tungsten radiation. The net scattered intensity is calculated by subtracting the background intensity at 1.211 angstroms from the gross intensity of the incoherently scattered tungsten L alpha peak. The equation for the corrected lead intensity ratio follows:

$$R = \frac{\text{Lead L alpha–background}}{\text{Incoherent tungsten L alpha–corrected background}}$$

6.4 Obtain a linear calibration curve by performing a least squares fit of the corrected lead intensity ratios to the standard concentrations.

7. Procedure.

7.1 Prepare a calibration curve as described in 6. Since the scattered tungsten radiation serves as an internal standard, the calibration curve should serve for at least several days. Each day the suitability of the calibration curve should be checked by analyzing several National Bureau of Standards (NBS) lead-in-reference-fuel standards or other suitable standards.

7.2 Determine the corrected lead intensity ratio for a sample in the same manner as was done for the standards. The samples should be brought to room temperature before analysis.

7.3 Determine the lead concentration of the sample from the calibration curve. If the sample concentration is greater than 5.0 g Pb/U.S. gallon or the range calibrated for in 6.1, the sample should be diluted so that the result is within the calibration span of the instrument.

7.4 Quality control standards, such as NBS standard reference materials, should be analyzed at least once every testing session.

7.5 For each group of ten samples, a spiked sample should be prepared by adding a known amount of lead to a sample. This known addition should be at least 0.05 g Pb/U.S. gallon, at least 50% of the measured lead content of the unspiked sample, and not more than 200% of the measured lead content of the unspiked sample (unless the minimum addition of 0.05 g Pb/U.S. gallon exceeds 200%). Both the spiked and unspiked samples should be analyzed.

8. Quality control.

8.1 The difference between duplicates should not exceed 0.005 g Pb/U.S. gallon or a relative difference of 6%.

8.2 All quality control standard check samples should agree within 10% of the nominal value of the standard.

8.3 All spiked samples should have a percent recovery of 100% ±10%. The percent recovery, P, is calculated as follows:

$P = 100 \times (A - B) / K$

where

A = the analytical result from the spiked sample, B = the analytical result from the unspiked sample, and K = the known addition.

8.4 The difference between independent analyses of the same sample in different laboratories should not exceed 0.01 g Pb/U.S. gallon or a relative difference of 12%.

9. *Past quality control data.*

9.1 Duplicate analysis for 26 samples in the range of 0.01 to 0.10 g Pb/U.S. gallon resulted in an average relative difference of 5.2% with a standard deviation of 5.4%. Duplicate analysis of 14 samples in the range 0.1 to 0.5 g Pb/U.S. gallon resulted in an average relative difference of 2.3% with a standard deviation of 2.0. Duplicate analysis of 47 samples in the range of 0.5 to 5 g Pb/U.S. gallon resulted in an average relative difference of 2.1% with a standard deviation of 1.8%.

9.2 The average percent recovery for 23 spikes made to samples in the 0.0 to 0.1 g Pb/U.S. gallon range was 103% with a standard deviation of 3.2%. For 42 spikes made to samples in the 0.1 to 5.0 g Pb/U.S. gallon range, the average percent recovery was 102% with a standard deviation of 4.2%.

9.3 The analysis of National Bureau of Standards lead-in-reference-fuel standards of known concentrations in a single laboratory has resulted in found values deviating from the true value for 14 determinations of 0.0490 g Pb/U.S. gallon by an average of 2.8% with a standard deviation of 6.4%, for 11 determinations of 0.065 g Pb/U.S. gallon by an average of 4.4% with a standard deviation of 2.9%, and for 15 determinations of 1.994 g Pb/U.S. gallon by an average of 0.3% with a standard deviation of 1.3%.

9.4 Eighteen analyses of reference samples (U.S. EPA, Research Triangle Park, NC) have resulted in found values differing from the true value by an average of 0.0004 g Pb/U.S. gallon with a standard deviation of 0.004 g Pb/U.S. gallon.

ANNEX

A1. Precautionary Statements

A1.1 Isooctane

Danger—Extremely flammable. Vapors harmful if inhaled.
Vapor may cause flash fire.
Keep away from heat, sparks, and open flame.
Vapors are heavier than air and may gather in low places, resulting in explosion hazard.
Keep container closed.
Use adequate ventilation.
Avoid buildup of vapors.
Avoid prolonged breathing of vapor or spray mist.
Avoid prolonged or repeated skin contact.

A1.2 Toluene

Warning—Flammable. Vapor harmful.
Keep away from heat, sparks, and open flame.
Keep container closed.
Use with adequate ventilation.
Avoid breathing of vapor or spray mist.
Avoid prolonged or repeated contact with skin.

A1.3 Gasoline

Danger—Extremely flammable. Vapors harmful if inhaled.
Vapor may cause flash fire.
Keep away from heat, sparks, and open flame.
Vapors are heavier than air and may gather in low places, resulting in explosion hazard.
Keep container closed.
Use adequate ventilation.
Avoid buildup of vapors.
Avoid prolonged breathing of vapor or spray mist.
Avoid prolonged or repeated skin contact.

[39 FR 24891, July 8, 1974; 39 FR 25653, July 12, 1974; 39 FR 26287, July 18, 1974, as amended at 47 FR 765, Jan. 7, 1982; 52 FR 259, Jan. 5, 1987; 56 FR 13768, Apr. 4, 1991]

APPENDIXES C–G TO PART 80
[RESERVED]

FINDING AIDS

A list of CFR titles, subtitles, chapters, subchapters and parts and an alphabetical list of agencies publishing in the CFR are included in the CFR Index and Finding Aids volume to the Code of Federal Regulations which is published separately and revised annually.

Table of CFR Titles and Chapters
Alphabetical List of Agencies Appearing in the CFR
List of CFR Sections Affected

Table of CFR Titles and Chapters

(Revised as of July 1, 2010)

Title 1—General Provisions

I Administrative Committee of the Federal Register (Parts 1—49)
II Office of the Federal Register (Parts 50—299)
IV Miscellaneous Agencies (Parts 400—500)

Title 2—Grants and Agreements

SUBTITLE A—OFFICE OF MANAGEMENT AND BUDGET GUIDANCE FOR GRANTS AND AGREEMENTS

I Office of Management and Budget Governmentwide Guidance for Grants and Agreements (Parts 100—199)
II Office of Management and Budget Circulars and Guidance (200—299)

SUBTITLE B—FEDERAL AGENCY REGULATIONS FOR GRANTS AND AGREEMENTS

III Department of Health and Human Services (Parts 300— 399)
IV Department of Agriculture (Parts 400—499)
VI Department of State (Parts 600—699)
VIII Department of Veterans Affairs (Parts 800—899)
IX Department of Energy (Parts 900—999)
XI Department of Defense (Parts 1100—1199)
XII Department of Transportation (Parts 1200—1299)
XIII Department of Commerce (Parts 1300—1399)
XIV Department of the Interior (Parts 1400—1499)
XV Environmental Protection Agency (Parts 1500—1599)
XVIII National Aeronautics and Space Administration (Parts 1880—1899)
XXII Corporation for National and Community Service (Parts 2200—2299)
XXIII Social Security Administration (Parts 2300—2399)
XXIV Housing and Urban Development (Parts 2400—2499)
XXV National Science Foundation (Parts 2500—2599)
XXVI National Archives and Records Administration (Parts 2600—2699)
XXVII Small Business Administration (Parts 2700—2799)
XXVIII Department of Justice (Parts 2800—2899)
XXX Department of Homeland Security (Parts 3000—3099)
XXXI Institute of Museum and Library Services (Parts 3100—3199)
XXXII National Endowment for the Arts (Parts 3200—3299)

Title 2—Grants and Agreements—Continued

Chap.	
XXXIII	National Endowment for the Humanities (Parts 3300—3399)
XXXV	Export-Import Bank of the United States (Parts 3500—3599)
XXXVII	Peace Corps (Parts 3700—3799)

Title 3—The President

I	Executive Office of the President (Parts 100—199)

Title 4—Accounts

I	Government Accountability Office (Parts 1—99)
II	Recovery Accountability and Transparency Board (Parts 200—299)

Title 5—Administrative Personnel

I	Office of Personnel Management (Parts 1—1199)
II	Merit Systems Protection Board (Parts 1200—1299)
III	Office of Management and Budget (Parts 1300—1399)
V	The International Organizations Employees Loyalty Board (Parts 1500—1599)
VI	Federal Retirement Thrift Investment Board (Parts 1600—1699)
VIII	Office of Special Counsel (Parts 1800—1899)
IX	Appalachian Regional Commission (Parts 1900—1999)
XI	Armed Forces Retirement Home (Parts 2100—2199)
XIV	Federal Labor Relations Authority, General Counsel of the Federal Labor Relations Authority and Federal Service Impasses Panel (Parts 2400—2499)
XV	Office of Administration, Executive Office of the President (Parts 2500—2599)
XVI	Office of Government Ethics (Parts 2600—2699)
XXI	Department of the Treasury (Parts 3100—3199)
XXII	Federal Deposit Insurance Corporation (Parts 3200—3299)
XXIII	Department of Energy (Parts 3300—3399)
XXIV	Federal Energy Regulatory Commission (Parts 3400—3499)
XXV	Department of the Interior (Parts 3500—3599)
XXVI	Department of Defense (Parts 3600— 3699)
XXVIII	Department of Justice (Parts 3800—3899)
XXIX	Federal Communications Commission (Parts 3900—3999)
XXX	Farm Credit System Insurance Corporation (Parts 4000—4099)
XXXI	Farm Credit Administration (Parts 4100—4199)
XXXIII	Overseas Private Investment Corporation (Parts 4300—4399)
XXXV	Office of Personnel Management (Parts 4500—4599)
XL	Interstate Commerce Commission (Parts 5000—5099)
XLI	Commodity Futures Trading Commission (Parts 5100—5199)
XLII	Department of Labor (Parts 5200—5299)

Title 5—Administrative Personnel—Continued

Chap.	
XLIII	National Science Foundation (Parts 5300—5399)
XLV	Department of Health and Human Services (Parts 5500—5599)
XLVI	Postal Rate Commission (Parts 5600—5699)
XLVII	Federal Trade Commission (Parts 5700—5799)
XLVIII	Nuclear Regulatory Commission (Parts 5800—5899)
L	Department of Transportation (Parts 6000—6099)
LII	Export-Import Bank of the United States (Parts 6200—6299)
LIII	Department of Education (Parts 6300—6399)
LIV	Environmental Protection Agency (Parts 6400—6499)
LV	National Endowment for the Arts (Parts 6500—6599)
LVI	National Endowment for the Humanities (Parts 6600—6699)
LVII	General Services Administration (Parts 6700—6799)
LVIII	Board of Governors of the Federal Reserve System (Parts 6800—6899)
LIX	National Aeronautics and Space Administration (Parts 6900—6999)
LX	United States Postal Service (Parts 7000—7099)
LXI	National Labor Relations Board (Parts 7100—7199)
LXII	Equal Employment Opportunity Commission (Parts 7200—7299)
LXIII	Inter-American Foundation (Parts 7300—7399)
LXIV	Merit Systems Protection Board (Parts 7400—7499)
LXV	Department of Housing and Urban Development (Parts 7500—7599)
LXVI	National Archives and Records Administration (Parts 7600—7699)
LXVII	Institute of Museum and Library Services (Parts 7700—7799)
LXVIII	Commission on Civil Rights (Parts 7800—7899)
LXIX	Tennessee Valley Authority (Parts 7900—7999)
LXXI	Consumer Product Safety Commission (Parts 8100—8199)
LXXII	Special Inspector General for Iraq Reconstruction (Parts 8200—8299)
LXXIII	Department of Agriculture (Parts 8300—8399)
LXXIV	Federal Mine Safety and Health Review Commission (Parts 8400—8499)
LXXVI	Federal Retirement Thrift Investment Board (Parts 8600—8699)
LXXVII	Office of Management and Budget (Parts 8700—8799)
XCVII	Department of Homeland Security Human Resources Management System (Department of Homeland Security—Office of Personnel Management) (Parts 9700—9799)
XCIX	Department of Defense Human Resources Management and Labor Relations Systems (Department of Defense—Office of Personnel Management) (Parts 9900—9999)

Title 6—Domestic Security

I	Department of Homeland Security, Office of the Secretary (Parts 0—99)

Title 7—Agriculture

Chap.

SUBTITLE A—OFFICE OF THE SECRETARY OF AGRICULTURE (PARTS 0—26)

SUBTITLE B—REGULATIONS OF THE DEPARTMENT OF AGRICULTURE

I Agricultural Marketing Service (Standards, Inspections, Marketing Practices), Department of Agriculture (Parts 27—209)

II Food and Nutrition Service, Department of Agriculture (Parts 210—299)

III Animal and Plant Health Inspection Service, Department of Agriculture (Parts 300—399)

IV Federal Crop Insurance Corporation, Department of Agriculture (Parts 400—499)

V Agricultural Research Service, Department of Agriculture (Parts 500—599)

VI Natural Resources Conservation Service, Department of Agriculture (Parts 600—699)

VII Farm Service Agency, Department of Agriculture (Parts 700—799)

VIII Grain Inspection, Packers and Stockyards Administration (Federal Grain Inspection Service), Department of Agriculture (Parts 800—899)

IX Agricultural Marketing Service (Marketing Agreements and Orders; Fruits, Vegetables, Nuts), Department of Agriculture (Parts 900—999)

X Agricultural Marketing Service (Marketing Agreements and Orders; Milk), Department of Agriculture (Parts 1000—1199)

XI Agricultural Marketing Service (Marketing Agreements and Orders; Miscellaneous Commodities), Department of Agriculture (Parts 1200—1299)

XIV Commodity Credit Corporation, Department of Agriculture (Parts 1400—1499)

XV Foreign Agricultural Service, Department of Agriculture (Parts 1500—1599)

XVI Rural Telephone Bank, Department of Agriculture (Parts 1600—1699)

XVII Rural Utilities Service, Department of Agriculture (Parts 1700—1799)

XVIII Rural Housing Service, Rural Business-Cooperative Service, Rural Utilities Service, and Farm Service Agency, Department of Agriculture (Parts 1800—2099)

XX Local Television Loan Guarantee Board (Parts 2200—2299)

XXVI Office of Inspector General, Department of Agriculture (Parts 2600—2699)

XXVII Office of Information Resources Management, Department of Agriculture (Parts 2700—2799)

XXVIII Office of Operations, Department of Agriculture (Parts 2800—2899)

XXIX Office of Energy Policy and New Uses, Department of Agriculture (Parts 2900—2999)

XXX Office of the Chief Financial Officer, Department of Agriculture (Parts 3000—3099)

Title 7—Agriculture—Continued

Chap.	
XXXI	Office of Environmental Quality, Department of Agriculture (Parts 3100—3199)
XXXII	Office of Procurement and Property Management, Department of Agriculture (Parts 3200—3299)
XXXIII	Office of Transportation, Department of Agriculture (Parts 3300—3399)
XXXIV	National Institute of Food and Agriculture (Parts 3400—3499)
XXXV	Rural Housing Service, Department of Agriculture (Parts 3500—3599)
XXXVI	National Agricultural Statistics Service, Department of Agriculture (Parts 3600—3699)
XXXVII	Economic Research Service, Department of Agriculture (Parts 3700—3799)
XXXVIII	World Agricultural Outlook Board, Department of Agriculture (Parts 3800—3899)
XLI	[Reserved]
XLII	Rural Business-Cooperative Service and Rural Utilities Service, Department of Agriculture (Parts 4200—4299)
L	Rural Business-Cooperative Service, Rurual Housing Service, and Rural Utilities Service, Department of Agriculture (Parts 5000—5099)

Title 8—Aliens and Nationality

I	Department of Homeland Security (Immigration and Naturalization) (Parts 1—499)
V	Executive Office for Immigration Review, Department of Justice (Parts 1000—1399)

Title 9—Animals and Animal Products

I	Animal and Plant Health Inspection Service, Department of Agriculture (Parts 1—199)
II	Grain Inspection, Packers and Stockyards Administration (Packers and Stockyards Programs), Department of Agriculture (Parts 200—299)
III	Food Safety and Inspection Service, Department of Agriculture (Parts 300—599)

Title 10—Energy

I	Nuclear Regulatory Commission (Parts 0—199)
II	Department of Energy (Parts 200—699)
III	Department of Energy (Parts 700—999)
X	Department of Energy (General Provisions) (Parts 1000—1099)
XIII	Nuclear Waste Technical Review Board (Parts 1303—1399)
XVII	Defense Nuclear Facilities Safety Board (Parts 1700—1799)
XVIII	Northeast Interstate Low-Level Radioactive Waste Commission (Parts 1800—1899)

Title 11—Federal Elections

Chap.

I Federal Election Commission (Parts 1—9099)

II Election Assistance Commission (Parts 9400—9499)

Title 12—Banks and Banking

I Comptroller of the Currency, Department of the Treasury (Parts 1—199)

II Federal Reserve System (Parts 200—299)

III Federal Deposit Insurance Corporation (Parts 300—399)

IV Export-Import Bank of the United States (Parts 400—499)

V Office of Thrift Supervision, Department of the Treasury (Parts 500—599)

VI Farm Credit Administration (Parts 600—699)

VII National Credit Union Administration (Parts 700—799)

VIII Federal Financing Bank (Parts 800—899)

IX Federal Housing Finance Board (Parts 900—999)

XI Federal Financial Institutions Examination Council (Parts 1100—1199)

XII Federal Housing Finance Agency (Parts 1200—1299)

XIV Farm Credit System Insurance Corporation (Parts 1400—1499)

XV Department of the Treasury (Parts 1500—1599)

XVII Office of Federal Housing Enterprise Oversight, Department of Housing and Urban Development (Parts 1700—1799)

XVIII Community Development Financial Institutions Fund, Department of the Treasury (Parts 1800—1899)

Title 13—Business Credit and Assistance

I Small Business Administration (Parts 1—199)

III Economic Development Administration, Department of Commerce (Parts 300—399)

IV Emergency Steel Guarantee Loan Board (Parts 400—499)

V Emergency Oil and Gas Guaranteed Loan Board (Parts 500—599)

Title 14—Aeronautics and Space

I Federal Aviation Administration, Department of Transportation (Parts 1—199)

II Office of the Secretary, Department of Transportation (Aviation Proceedings) (Parts 200—399)

III Commercial Space Transportation, Federal Aviation Administration, Department of Transportation (Parts 400—499)

V National Aeronautics and Space Administration (Parts 1200—1299)

VI Air Transportation System Stabilization (Parts 1300—1399)

Title 15—Commerce and Foreign Trade

Chap.

SUBTITLE A—OFFICE OF THE SECRETARY OF COMMERCE (PARTS 0—29)

SUBTITLE B—REGULATIONS RELATING TO COMMERCE AND FOREIGN TRADE

I Bureau of the Census, Department of Commerce (Parts 30—199)

II National Institute of Standards and Technology, Department of Commerce (Parts 200—299)

III International Trade Administration, Department of Commerce (Parts 300—399)

IV Foreign-Trade Zones Board, Department of Commerce (Parts 400—499)

VII Bureau of Industry and Security, Department of Commerce (Parts 700—799)

VIII Bureau of Economic Analysis, Department of Commerce (Parts 800—899)

IX National Oceanic and Atmospheric Administration, Department of Commerce (Parts 900—999)

XI Technology Administration, Department of Commerce (Parts 1100—1199)

XIII East-West Foreign Trade Board (Parts 1300—1399)

XIV Minority Business Development Agency (Parts 1400—1499)

SUBTITLE C—REGULATIONS RELATING TO FOREIGN TRADE AGREEMENTS

XX Office of the United States Trade Representative (Parts 2000—2099)

SUBTITLE D—REGULATIONS RELATING TO TELECOMMUNICATIONS AND INFORMATION

XXIII National Telecommunications and Information Administration, Department of Commerce (Parts 2300—2399)

Title 16—Commercial Practices

I Federal Trade Commission (Parts 0—999)

II Consumer Product Safety Commission (Parts 1000—1799)

Title 17—Commodity and Securities Exchanges

I Commodity Futures Trading Commission (Parts 1—199)

II Securities and Exchange Commission (Parts 200—399)

IV Department of the Treasury (Parts 400—499)

Title 18—Conservation of Power and Water Resources

I Federal Energy Regulatory Commission, Department of Energy (Parts 1—399)

III Delaware River Basin Commission (Parts 400—499)

VI Water Resources Council (Parts 700—799)

Title 18—Conservation of Power and Water Resources—Continued

Chap.

VIII Susquehanna River Basin Commission (Parts 800—899)

XIII Tennessee Valley Authority (Parts 1300—1399)

Title 19—Customs Duties

I U.S. Customs and Border Protection, Department of Homeland Security; Department of the Treasury (Parts 0—199)

II United States International Trade Commission (Parts 200—299)

III International Trade Administration, Department of Commerce (Parts 300—399)

IV U.S. Immigration and Customs Enforcement, Department of Homeland Security (Parts 400—599)

Title 20—Employees' Benefits

I Office of Workers' Compensation Programs, Department of Labor (Parts 1—199)

II Railroad Retirement Board (Parts 200—399)

III Social Security Administration (Parts 400—499)

IV Employees Compensation Appeals Board, Department of Labor (Parts 500—599)

V Employment and Training Administration, Department of Labor (Parts 600—699)

VI Employment Standards Administration, Department of Labor (Parts 700—799)

VII Benefits Review Board, Department of Labor (Parts 800—899)

VIII Joint Board for the Enrollment of Actuaries (Parts 900—999)

IX Office of the Assistant Secretary for Veterans' Employment and Training Service, Department of Labor (Parts 1000—1099)

Title 21—Food and Drugs

I Food and Drug Administration, Department of Health and Human Services (Parts 1—1299)

II Drug Enforcement Administration, Department of Justice (Parts 1300—1399)

III Office of National Drug Control Policy (Parts 1400—1499)

Title 22—Foreign Relations

I Department of State (Parts 1—199)

II Agency for International Development (Parts 200—299)

III Peace Corps (Parts 300—399)

IV International Joint Commission, United States and Canada (Parts 400—499)

V Broadcasting Board of Governors (Parts 500—599)

VII Overseas Private Investment Corporation (Parts 700—799)

IX Foreign Service Grievance Board (Parts 900—999)

Title 22—Foreign Relations—Continued

Chap.

X Inter-American Foundation (Parts 1000—1099)

XI International Boundary and Water Commission, United States and Mexico, United States Section (Parts 1100—1199)

XII United States International Development Cooperation Agency (Parts 1200—1299)

XIII Millenium Challenge Corporation (Parts 1300—1399)

XIV Foreign Service Labor Relations Board; Federal Labor Relations Authority; General Counsel of the Federal Labor Relations Authority; and the Foreign Service Impasse Disputes Panel (Parts 1400—1499)

XV African Development Foundation (Parts 1500—1599)

XVI Japan-United States Friendship Commission (Parts 1600—1699)

XVII United States Institute of Peace (Parts 1700—1799)

Title 23—Highways

I Federal Highway Administration, Department of Transportation (Parts 1—999)

II National Highway Traffic Safety Administration and Federal Highway Administration, Department of Transportation (Parts 1200—1299)

III National Highway Traffic Safety Administration, Department of Transportation (Parts 1300—1399)

Title 24—Housing and Urban Development

SUBTITLE A—OFFICE OF THE SECRETARY, DEPARTMENT OF HOUSING AND URBAN DEVELOPMENT (PARTS 0—99)

SUBTITLE B—REGULATIONS RELATING TO HOUSING AND URBAN DEVELOPMENT

I Office of Assistant Secretary for Equal Opportunity, Department of Housing and Urban Development (Parts 100—199)

II Office of Assistant Secretary for Housing-Federal HousingCommissioner, Department of Housing and Urban Development (Parts 200—299)

III Government National Mortgage Association, Department of Housing and Urban Development (Parts 300—399)

IV Office of Housing and Office of Multifamily Housing Assistance Restructuring, Department of Housing and Urban Development (Parts 400—499)

V Office of Assistant Secretary for Community Planning and Development, Department of Housing and Urban Development (Parts 500—599)

VI Office of Assistant Secretary for Community Planning and Development, Department of Housing and Urban Development (Parts 600—699) [Reserved]

VII Office of the Secretary, Department of Housing and Urban Development (Housing Assistance Programs and Public and Indian Housing Programs) (Parts 700—799)

Title 24—Housing and Urban Development—Continued

Chap.

VIII Office of the Assistant Secretary for Housing—Federal Housing Commissioner, Department of Housing and Urban Development (Section 8 Housing Assistance Programs, Section 202 Direct Loan Program, Section 202 Supportive Housing for the Elderly Program and Section 811 Supportive Housing for Persons With Disabilities Program) (Parts 800—899)

IX Office of Assistant Secretary for Public and Indian Housing, Department of Housing and Urban Development (Parts 900—1699)

X Office of Assistant Secretary for Housing—Federal Housing Commissioner, Department of Housing and Urban Development (Interstate Land Sales Registration Program) (Parts 1700—1799)

XII Office of Inspector General, Department of Housing and Urban Development (Parts 2000—2099)

XX Office of Assistant Secretary for Housing—Federal Housing Commissioner, Department of Housing and Urban Development (Parts 3200—3899)

XXIV Board of Directors of the HOPE for Homeowners Program (Parts 4000—4099)

XXV Neighborhood Reinvestment Corporation (Parts 4100—4199)

Title 25—Indians

I Bureau of Indian Affairs, Department of the Interior (Parts 1—299)

II Indian Arts and Crafts Board, Department of the Interior (Parts 300—399)

III National Indian Gaming Commission, Department of the Interior (Parts 500—599)

IV Office of Navajo and Hopi Indian Relocation (Parts 700—799)

V Bureau of Indian Affairs, Department of the Interior, and Indian Health Service, Department of Health and Human Services (Part 900)

VI Office of the Assistant Secretary-Indian Affairs, Department of the Interior (Parts 1000—1199)

VII Office of the Special Trustee for American Indians, Department of the Interior (Parts 1200—1299)

Title 26—Internal Revenue

I Internal Revenue Service, Department of the Treasury (Parts 1—899)

Title 27—Alcohol, Tobacco Products and Firearms

I Alcohol and Tobacco Tax and Trade Bureau, Department of the Treasury (Parts 1—399)

II Bureau of Alcohol, Tobacco, Firearms, and Explosives, Department of Justice (Parts 400—699)

Title 28—Judicial Administration

Chap.

I Department of Justice (Parts 0—299)

III Federal Prison Industries, Inc., Department of Justice (Parts 300—399)

V Bureau of Prisons, Department of Justice (Parts 500—599)

VI Offices of Independent Counsel, Department of Justice (Parts 600—699)

VII Office of Independent Counsel (Parts 700—799)

VIII Court Services and Offender Supervision Agency for the District of Columbia (Parts 800—899)

IX National Crime Prevention and Privacy Compact Council (Parts 900—999)

XI Department of Justice and Department of State (Parts 1100—1199)

Title 29—Labor

SUBTITLE A—OFFICE OF THE SECRETARY OF LABOR (PARTS 0—99)

SUBTITLE B—REGULATIONS RELATING TO LABOR

I National Labor Relations Board (Parts 100—199)

II Office of Labor-Management Standards, Department of Labor (Parts 200—299)

III National Railroad Adjustment Board (Parts 300—399)

IV Office of Labor-Management Standards, Department of Labor (Parts 400—499)

V Wage and Hour Division, Department of Labor (Parts 500—899)

IX Construction Industry Collective Bargaining Commission (Parts 900—999)

X National Mediation Board (Parts 1200—1299)

XII Federal Mediation and Conciliation Service (Parts 1400—1499)

XIV Equal Employment Opportunity Commission (Parts 1600—1699)

XVII Occupational Safety and Health Administration, Department of Labor (Parts 1900—1999)

XX Occupational Safety and Health Review Commission (Parts 2200—2499)

XXV Employee Benefits Security Administration, Department of Labor (Parts 2500—2599)

XXVII Federal Mine Safety and Health Review Commission (Parts 2700—2799)

XL Pension Benefit Guaranty Corporation (Parts 4000—4999)

Title 30—Mineral Resources

I Mine Safety and Health Administration, Department of Labor (Parts 1—199)

II Minerals Management Service, Department of the Interior (Parts 200—299)

III Board of Surface Mining and Reclamation Appeals, Department of the Interior (Parts 300—399)

Title 30—Mineral Resources—Continued

Chap.

IV Geological Survey, Department of the Interior (Parts 400—499)

VII Office of Surface Mining Reclamation and Enforcement, Department of the Interior (Parts 700—999)

Title 31—Money and Finance: Treasury

SUBTITLE A—OFFICE OF THE SECRETARY OF THE TREASURY (PARTS 0—50)

SUBTITLE B—REGULATIONS RELATING TO MONEY AND FINANCE

I Monetary Offices, Department of the Treasury (Parts 51—199)

II Fiscal Service, Department of the Treasury (Parts 200—399)

IV Secret Service, Department of the Treasury (Parts 400—499)

V Office of Foreign Assets Control, Department of the Treasury (Parts 500—599)

VI Bureau of Engraving and Printing, Department of the Treasury (Parts 600—699)

VII Federal Law Enforcement Training Center, Department of the Treasury (Parts 700—799)

VIII Office of International Investment, Department of the Treasury (Parts 800—899)

IX Federal Claims Collection Standards (Department of the Treasury—Department of Justice) (Parts 900—999)

Title 32—National Defense

SUBTITLE A—DEPARTMENT OF DEFENSE

I Office of the Secretary of Defense (Parts 1—399)

V Department of the Army (Parts 400—699)

VI Department of the Navy (Parts 700—799)

VII Department of the Air Force (Parts 800—1099)

SUBTITLE B—OTHER REGULATIONS RELATING TO NATIONAL DEFENSE

XII Defense Logistics Agency (Parts 1200—1299)

XVI Selective Service System (Parts 1600—1699)

XVII Office of the Director of National Intelligence (Parts 1700—1799)

XVIII National Counterintelligence Center (Parts 1800—1899)

XIX Central Intelligence Agency (Parts 1900—1999)

XX Information Security Oversight Office, National Archives and Records Administration (Parts 2000—2099)

XXI National Security Council (Parts 2100—2199)

XXIV Office of Science and Technology Policy (Parts 2400—2499)

XXVII Office for Micronesian Status Negotiations (Parts 2700—2799)

XXVIII Office of the Vice President of the United States (Parts 2800—2899)

Title 33—Navigation and Navigable Waters

I Coast Guard, Department of Homeland Security (Parts 1—199)

Title 33—Navigation and Navigable Waters—Continued

Chap.

II Corps of Engineers, Department of the Army (Parts 200—399)

IV Saint Lawrence Seaway Development Corporation, Department of Transportation (Parts 400—499)

Title 34—Education

SUBTITLE A—OFFICE OF THE SECRETARY, DEPARTMENT OF EDUCATION (PARTS 1—99)

SUBTITLE B—REGULATIONS OF THE OFFICES OF THE DEPARTMENT OF EDUCATION

I Office for Civil Rights, Department of Education (Parts 100—199)

II Office of Elementary and Secondary Education, Department of Education (Parts 200—299)

III Office of Special Education and Rehabilitative Services, Department of Education (Parts 300—399)

IV Office of Vocational and Adult Education, Department of Education (Parts 400—499)

V Office of Bilingual Education and Minority Languages Affairs, Department of Education (Parts 500—599)

VI Office of Postsecondary Education, Department of Education (Parts 600—699)

VII Office of Educational Research and Improvmeent, Department of Education [Reserved]

XI National Institute for Literacy (Parts 1100—1199)

SUBTITLE C—REGULATIONS RELATING TO EDUCATION

XII National Council on Disability (Parts 1200—1299)

Title 35 [Reserved]

Title 36—Parks, Forests, and Public Property

I National Park Service, Department of the Interior (Parts 1—199)

II Forest Service, Department of Agriculture (Parts 200—299)

III Corps of Engineers, Department of the Army (Parts 300—399)

IV American Battle Monuments Commission (Parts 400—499)

V Smithsonian Institution (Parts 500—599)

VI [Reserved]

VII Library of Congress (Parts 700—799)

VIII Advisory Council on Historic Preservation (Parts 800—899)

IX Pennsylvania Avenue Development Corporation (Parts 900—999)

X Presidio Trust (Parts 1000—1099)

XI Architectural and Transportation Barriers Compliance Board (Parts 1100—1199)

XII National Archives and Records Administration (Parts 1200—1299)

XV Oklahoma City National Memorial Trust (Parts 1500—1599)

XVI Morris K. Udall Scholarship and Excellence in National Environmental Policy Foundation (Parts 1600—1699)

Title 37—Patents, Trademarks, and Copyrights

Chap.

I United States Patent and Trademark Office, Department of Commerce (Parts 1—199)

II Copyright Office, Library of Congress (Parts 200—299)

III Copyright Royalty Board, Library of Congress (Parts 301—399)

IV Assistant Secretary for Technology Policy, Department of Commerce (Parts 400—499)

V Under Secretary for Technology, Department of Commerce (Parts 500—599)

Title 38—Pensions, Bonuses, and Veterans' Relief

I Department of Veterans Affairs (Parts 0—99)

II Armed Forces Retirement Home

Title 39—Postal Service

I United States Postal Service (Parts 1—999)

III Postal Regulatory Commission (Parts 3000—3099)

Title 40—Protection of Environment

I Environmental Protection Agency (Parts 1—1099)

IV Environmental Protection Agency and Department of Justice (Parts 1400—1499)

V Council on Environmental Quality (Parts 1500—1599)

VI Chemical Safety and Hazard Investigation Board (Parts 1600—1699)

VII Environmental Protection Agency and Department of Defense; Uniform National Discharge Standards for Vessels of the Armed Forces (Parts 1700—1799)

Title 41—Public Contracts and Property Management

SUBTITLE B—OTHER PROVISIONS RELATING TO PUBLIC CONTRACTS

50 Public Contracts, Department of Labor (Parts 50–1—50–999)

51 Committee for Purchase From People Who Are Blind or Severely Disabled (Parts 51–1—51–99)

60 Office of Federal Contract Compliance Programs, Equal Employment Opportunity, Department of Labor (Parts 60–1—60–999)

61 Office of the Assistant Secretary for Veterans' Employment and Training Service, Department of Labor (Parts 61–1—61–999)

Chapters 62—100 [Reserved]

SUBTITLE C—FEDERAL PROPERTY MANAGEMENT REGULATIONS SYSTEM

101 Federal Property Management Regulations (Parts 101–1—101–99)

102 Federal Management Regulation (Parts 102–1—102–299)

Chapters 103—104 [Reserved]

105 General Services Administration (Parts 105–1—105–999)

Title 41—Public Contracts and Property Management—Continued

Chap.

109 Department of Energy Property Management Regulations (Parts 109–1—109–99)

114 Department of the Interior (Parts 114–1—114–99)

115 Environmental Protection Agency (Parts 115–1—115–99)

128 Department of Justice (Parts 128–1—128–99)

Chapters 129—200 [Reserved]

SUBTITLE D—OTHER PROVISIONS RELATING TO PROPERTY MANAGEMENT [RESERVED]

SUBTITLE E—FEDERAL INFORMATION RESOURCES MANAGEMENT REGULATIONS SYSTEM [RESERVED]

SUBTITLE F—FEDERAL TRAVEL REGULATION SYSTEM

300 General (Parts 300–1—300–99)

301 Temporary Duty (TDY) Travel Allowances (Parts 301–1—301–99)

302 Relocation Allowances (Parts 302–1—302–99)

303 Payment of Expenses Connected with the Death of Certain Employees (Part 303–1—303–99)

304 Payment of Travel Expenses from a Non-Federal Source (Parts 304–1—304–99)

Title 42—Public Health

I Public Health Service, Department of Health and Human Services (Parts 1—199)

IV Centers for Medicare & Medicaid Services, Department of Health and Human Services (Parts 400—499)

V Office of Inspector General-Health Care, Department of Health and Human Services (Parts 1000—1999)

Title 43—Public Lands: Interior

SUBTITLE A—OFFICE OF THE SECRETARY OF THE INTERIOR (PARTS 1—199)

SUBTITLE B—REGULATIONS RELATING TO PUBLIC LANDS

I Bureau of Reclamation, Department of the Interior (Parts 200—499)

II Bureau of Land Management, Department of the Interior (Parts 1000—9999)

III Utah Reclamation Mitigation and Conservation Commission (Parts 10000—10010)

Title 44—Emergency Management and Assistance

I Federal Emergency Management Agency, Department of Homeland Security (Parts 0—399)

IV Department of Commerce and Department of Transportation (Parts 400—499)

Title 45—Public Welfare

Chap.

SUBTITLE A—DEPARTMENT OF HEALTH AND HUMAN SERVICES (PARTS 1—199)

SUBTITLE B—REGULATIONS RELATING TO PUBLIC WELFARE

II Office of Family Assistance (Assistance Programs), Administration for Children and Families, Department of Health and Human Services (Parts 200—299)

III Office of Child Support Enforcement (Child Support Enforcement Program), Administration for Children and Families, Department of Health and Human Services (Parts 300—399)

IV Office of Refugee Resettlement, Administration for Children and Families, Department of Health and Human Services (Parts 400—499)

V Foreign Claims Settlement Commission of the United States, Department of Justice (Parts 500—599)

VI National Science Foundation (Parts 600—699)

VII Commission on Civil Rights (Parts 700—799)

VIII Office of Personnel Management (Parts 800—899) [Reserved]

X Office of Community Services, Administration for Children and Families, Department of Health and Human Services (Parts 1000—1099)

XI National Foundation on the Arts and the Humanities (Parts 1100—1199)

XII Corporation for National and Community Service (Parts 1200—1299)

XIII Office of Human Development Services, Department of Health and Human Services (Parts 1300—1399)

XVI Legal Services Corporation (Parts 1600—1699)

XVII National Commission on Libraries and Information Science (Parts 1700—1799)

XVIII Harry S. Truman Scholarship Foundation (Parts 1800—1899)

XXI Commission on Fine Arts (Parts 2100—2199)

XXIII Arctic Research Commission (Part 2301)

XXIV James Madison Memorial Fellowship Foundation (Parts 2400—2499)

XXV Corporation for National and Community Service (Parts 2500—2599)

Title 46—Shipping

I Coast Guard, Department of Homeland Security (Parts 1—199)

II Maritime Administration, Department of Transportation (Parts 200—399)

III Coast Guard (Great Lakes Pilotage), Department of Homeland Security (Parts 400—499)

IV Federal Maritime Commission (Parts 500—599)

Title 47—Telecommunication

I Federal Communications Commission (Parts 0—199)

Title 47—Telecommunication—Continued

Chap.

II Office of Science and Technology Policy and National Security Council (Parts 200—299)

III National Telecommunications and Information Administration, Department of Commerce (Parts 300—399)

IV National Telecommunications and Information Administration, Department of Commerce, and National Highway Traffic Safety Administration, Department of Transportation (Parts 400—499)

Title 48—Federal Acquisition Regulations System

1 Federal Acquisition Regulation (Parts 1—99)

2 Defense Acquisition Regulations System, Department of Defense (Parts 200—299)

3 Health and Human Services (Parts 300—399)

4 Department of Agriculture (Parts 400—499)

5 General Services Administration (Parts 500—599)

6 Department of State (Parts 600—699)

7 Agency for International Development (Parts 700—799)

8 Department of Veterans Affairs (Parts 800—899)

9 Department of Energy (Parts 900—999)

10 Department of the Treasury (Parts 1000—1099)

12 Department of Transportation (Parts 1200—1299)

13 Department of Commerce (Parts 1300—1399)

14 Department of the Interior (Parts 1400—1499)

15 Environmental Protection Agency (Parts 1500—1599)

16 Office of Personnel Management, Federal Employees Health Benefits Acquisition Regulation (Parts 1600—1699)

17 Office of Personnel Management (Parts 1700—1799)

18 National Aeronautics and Space Administration (Parts 1800—1899)

19 Broadcasting Board of Governors (Parts 1900—1999)

20 Nuclear Regulatory Commission (Parts 2000—2099)

21 Office of Personnel Management, Federal Employees Group Life Insurance Federal Acquisition Regulation (Parts 2100—2199)

23 Social Security Administration (Parts 2300—2399)

24 Department of Housing and Urban Development (Parts 2400—2499)

25 National Science Foundation (Parts 2500—2599)

28 Department of Justice (Parts 2800—2899)

29 Department of Labor (Parts 2900—2999)

30 Department of Homeland Security, Homeland Security Acquisition Regulation (HSAR) (Parts 3000—3099)

34 Department of Education Acquisition Regulation (Parts 3400—3499)

51 Department of the Army Acquisition Regulations (Parts 5100—5199)

Chap.

52 Department of the Navy Acquisition Regulations (Parts 5200—5299)

53 Department of the Air Force Federal Acquisition Regulation Supplement [Reserved]

54 Defense Logistics Agency, Department of Defense (Parts 5400—5499)

57 African Development Foundation (Parts 5700—5799)

61 Civilian Board of Contract Appeals, General Services Administration (Parts 6100—6199)

63 Department of Transportation Board of Contract Appeals (Parts 6300—6399)

99 Cost Accounting Standards Board, Office of Federal Procurement Policy, Office of Management and Budget (Parts 9900—9999)

Title 49—Transportation

SUBTITLE A—OFFICE OF THE SECRETARY OF TRANSPORTATION (PARTS 1—99)

SUBTITLE B—OTHER REGULATIONS RELATING TO TRANSPORTATION

I Pipeline and Hazardous Materials Safety Administration, Department of Transportation (Parts 100—199)

II Federal Railroad Administration, Department of Transportation (Parts 200—299)

III Federal Motor Carrier Safety Administration, Department of Transportation (Parts 300—399)

IV Coast Guard, Department of Homeland Security (Parts 400—499)

V National Highway Traffic Safety Administration, Department of Transportation (Parts 500—599)

VI Federal Transit Administration, Department of Transportation (Parts 600—699)

VII National Railroad Passenger Corporation (AMTRAK) (Parts 700—799)

VIII National Transportation Safety Board (Parts 800—999)

X Surface Transportation Board, Department of Transportation (Parts 1000—1399)

XI Research and Innovative Technology Administration, Department of Transportation [Reserved]

XII Transportation Security Administration, Department of Homeland Security (Parts 1500—1699)

Title 50—Wildlife and Fisheries

I United States Fish and Wildlife Service, Department of the Interior (Parts 1—199)

II National Marine Fisheries Service, National Oceanic and Atmospheric Administration, Department of Commerce (Parts 200—299)

III International Fishing and Related Activities (Parts 300—399)

Title 50—Wildlife and Fisheries—Continued

Chap.

IV Joint Regulations (United States Fish and Wildlife Service, Department of the Interior and National Marine Fisheries Service, National Oceanic and Atmospheric Administration, Department of Commerce); Endangered Species Committee Regulations (Parts 400—499)

V Marine Mammal Commission (Parts 500—599)

VI Fishery Conservation and Management, National Oceanic and Atmospheric Administration, Department of Commerce (Parts 600—699)

CFR Index and Finding Aids

Subject/Agency Index

List of Agency Prepared Indexes

Parallel Tables of Statutory Authorities and Rules

List of CFR Titles, Chapters, Subchapters, and Parts

Alphabetical List of Agencies Appearing in the CFR

Alphabetical List of Agencies Appearing in the CFR

(Revised as of July 1, 2010)

Agency	CFR Title, Subtitle or Chapter
Administrative Committee of the Federal Register	1, I
Advanced Research Projects Agency	32, I
Advisory Council on Historic Preservation	36, VIII
African Development Foundation	22, XV
Federal Acquisition Regulation	48, 57
Agency for International Development	22, II
Federal Acquisition Regulation	48, 7
Agricultural Marketing Service	7, I, IX, X, XI
Agricultural Research Service	7, V
Agriculture Department	5, LXXIII
Agricultural Marketing Service	7, I, IX, X, XI
Agricultural Research Service	7, V
Animal and Plant Health Inspection Service	7, III; 9, I
Chief Financial Officer, Office of	7, XXX
Commodity Credit Corporation	7, XIV
Economic Research Service	7, XXXVII
Energy Policy and New Uses, Office of	2, IX; 7, XXIX
Environmental Quality, Office of	7, XXXI
Farm Service Agency	7, VII, XVIII
Federal Acquisition Regulation	48, 4
Federal Crop Insurance Corporation	7, IV
Food and Nutrition Service	7, II
Food Safety and Inspection Service	9, III
Foreign Agricultural Service	7, XV
Forest Service	36, II
Grain Inspection, Packers and Stockyards Administration	7, VIII; 9, II
Information Resources Management, Office of	7, XXVII
Inspector General, Office of	7, XXVI
National Agricultural Library	7, XLI
National Agricultural Statistics Service	7, XXXVI
National Institute of Food and Agriculture.	7, XXXIV
Natural Resources Conservation Service	7, VI
Operations, Office of	7, XXVIII
Procurement and Property Management, Office of	7, XXXII
Rural Business-Cooperative Service	7, XVIII, XLII, L
Rural Development Administration	7, XLII
Rural Housing Service	7, XVIII, XXXV, L
Rural Telephone Bank	7, XVI
Rural Utilities Service	7, XVII, XVIII, XLII, L
Secretary of Agriculture, Office of	7, Subtitle A
Transportation, Office of	7, XXXIII
World Agricultural Outlook Board	7, XXXVIII
Air Force Department	32, VII
Federal Acquisition Regulation Supplement	48, 53
Air Transportation Stabilization Board	14, VI
Alcohol and Tobacco Tax and Trade Bureau	27, I
Alcohol, Tobacco, Firearms, and Explosives, Bureau of	27, II
AMTRAK	49, VII
American Battle Monuments Commission	36, IV
American Indians, Office of the Special Trustee	25, VII
Animal and Plant Health Inspection Service	7, III; 9, I
Appalachian Regional Commission	5, IX
Architectural and Transportation Barriers Compliance Board	36, XI

Agency	CFR Title, Subtitle or Chapter
Arctic Research Commission	45, XXIII
Armed Forces Retirement Home	5, XI
Army Department	32, V
Engineers, Corps of	33, II; 36, III
Federal Acquisition Regulation	48, 51
Benefits Review Board	20, VII
Bilingual Education and Minority Languages Affairs, Office of	34, V
Blind or Severely Disabled, Committee for Purchase From People Who Are	41, 51
Broadcasting Board of Governors	22, V
Federal Acquisition Regulation	48, 19
Census Bureau	15, I
Centers for Medicare & Medicaid Services	42, IV
Central Intelligence Agency	32, XIX
Chief Financial Officer, Office of	7, XXX
Child Support Enforcement, Office of	45, III
Children and Families, Administration for	45, II, III, IV, X
Civil Rights, Commission on	5, LXVIII; 45, VII
Civil Rights, Office for	34, I
Coast Guard	33, I; 46, I; 49, IV
Coast Guard (Great Lakes Pilotage)	46, III
Commerce Department	44, IV
Census Bureau	15, I
Economic Affairs, Under Secretary	37, V
Economic Analysis, Bureau of	15, VIII
Economic Development Administration	13, III
Emergency Management and Assistance	44, IV
Federal Acquisition Regulation	48, 13
Fishery Conservation and Management	50, VI
Foreign-Trade Zones Board	15, IV
Industry and Security, Bureau of	15, VII
International Trade Administration	15, III; 19, III
National Institute of Standards and Technology	15, II
National Marine Fisheries Service	50, II, IV, VI
National Oceanic and Atmospheric Administration	15, IX; 50, II, III, IV, VI
National Telecommunications and Information Administration	15, XXIII; 47, III, IV
National Weather Service	15, IX
Patent and Trademark Office, United States	37, I
Productivity, Technology and Innovation, Assistant Secretary for	37, IV
Secretary of Commerce, Office of	15, Subtitle A
Technology, Under Secretary for	37, V
Technology Administration	15, XI
Technology Policy, Assistant Secretary for	37, IV
Commercial Space Transportation	14, III
Commodity Credit Corporation	7, XIV
Commodity Futures Trading Commission	5, XLI; 17, I
Community Planning and Development, Office of Assistant Secretary for	24, V, VI
Community Services, Office of	45, X
Comptroller of the Currency	12, I
Construction Industry Collective Bargaining Commission	29, IX
Consumer Product Safety Commission	5, LXXI; 16, II
Copyright Office	37, II
Copyright Royalty Board	37, III
Corporation for National and Community Service	2, XXII; 45, XII, XXV
Cost Accounting Standards Board	48, 99
Council on Environmental Quality	40, V
Court Services and Offender Supervision Agency for the District of Columbia	28, VIII
Customs and Border Protection Bureau	19, I
Defense Contract Audit Agency	32, I
Defense Department	5, XXVI; 32, Subtitle A; 40, VII
Advanced Research Projects Agency	32, I
Air Force Department	32, VII

Agency	CFR Title, Subtitle or Chapter
Army Department	32, V; 33, II; 36, III, 48, 51
Defense Acquisition Regulations System	48, 2
Defense Intelligence Agency	32, I
Defense Logistics Agency	32, I, XII; 48, 54
Engineers, Corps of	33, II; 36, III
Human Resources Management and Labor Relations Systems	5, XCIX
National Imagery and Mapping Agency	32, I
Navy Department	32, VI; 48, 52
Secretary of Defense, Office of	2, XI; 32, I
Defense Contract Audit Agency	32, I
Defense Intelligence Agency	32, I
Defense Logistics Agency	32, XII; 48, 54
Defense Nuclear Facilities Safety Board	10, XVII
Delaware River Basin Commission	18, III
District of Columbia, Court Services and Offender Supervision Agency for the	28, VIII
Drug Enforcement Administration	21, II
East-West Foreign Trade Board	15, XIII
Economic Affairs, Under Secretary	37, V
Economic Analysis, Bureau of	15, VIII
Economic Development Administration	13, III
Economic Research Service	7, XXXVII
Education, Department of	5, LIII
Bilingual Education and Minority Languages Affairs, Office of	34, V
Civil Rights, Office for	34, I
Educational Research and Improvement, Office of	34, VII
Elementary and Secondary Education, Office of	34, II
Federal Acquisition Regulation	48, 34
Postsecondary Education, Office of	34, VI
Secretary of Education, Office of	34, Subtitle A
Special Education and Rehabilitative Services, Office of	34, III
Vocational and Adult Education, Office of	34, IV
Educational Research and Improvement, Office of	34, VII
Election Assistance Commission	11, II
Elementary and Secondary Education, Office of	34, II
Emergency Oil and Gas Guaranteed Loan Board	13, V
Emergency Steel Guarantee Loan Board	13, IV
Employee Benefits Security Administration	29, XXV
Employees' Compensation Appeals Board	20, IV
Employees Loyalty Board	5, V
Employment and Training Administration	20, V
Employment Standards Administration	20, VI
Endangered Species Committee	50, IV
Energy, Department of	5, XXIII; 10, II, III, X
Federal Acquisition Regulation	48, 9
Federal Energy Regulatory Commission	5, XXIV; 18, I
Property Management Regulations	41, 109
Energy, Office of	7, XXIX
Engineers, Corps of	33, II; 36, III
Engraving and Printing, Bureau of	31, VI
Environmental Protection Agency	2, XV; 5, LIV; 40, I, IV, VII
Federal Acquisition Regulation	48, 15
Property Management Regulations	41, 115
Environmental Quality, Office of	7, XXXI
Equal Employment Opportunity Commission	5, LXII; 29, XIV
Equal Opportunity, Office of Assistant Secretary for	24, I
Executive Office of the President	3, I
Administration, Office of	5, XV
Environmental Quality, Council on	40, V
Management and Budget, Office of	5, III, LXXVII; 14, VI; 48, 99
National Drug Control Policy, Office of	21, III
National Security Council	32, XXI; 47, 2

Agency	CFR Title, Subtitle or Chapter
Presidential Documents	3
Science and Technology Policy, Office of	32, XXIV; 47, II
Trade Representative, Office of the United States	15, XX
Export-Import Bank of the United States	2, XXXV; 5, LII; 12, IV
Family Assistance, Office of	45, II
Farm Credit Administration	5, XXXI; 12, VI
Farm Credit System Insurance Corporation	5, XXX; 12, XIV
Farm Service Agency	7, VII, XVIII
Federal Acquisition Regulation	48, 1
Federal Aviation Administration	14, I
Commercial Space Transportation	14, III
Federal Claims Collection Standards	31, IX
Federal Communications Commission	5, XXIX; 47, I
Federal Contract Compliance Programs, Office of	41, 60
Federal Crop Insurance Corporation	7, IV
Federal Deposit Insurance Corporation	5, XXII; 12, III
Federal Election Commission	11, I
Federal Emergency Management Agency	44, I
Federal Employees Group Life Insurance Federal Acquisition Regulation	48, 21
Federal Employees Health Benefits Acquisition Regulation	48, 16
Federal Energy Regulatory Commission	5, XXIV; 18, I
Federal Financial Institutions Examination Council	12, XI
Federal Financing Bank	12, VIII
Federal Highway Administration	23, I, II
Federal Home Loan Mortgage Corporation	1, IV
Federal Housing Enterprise Oversight Office	12, XVII
Federal Housing Finance Agency	12, XII
Federal Housing Finance Board	12, IX
Federal Labor Relations Authority, and General Counsel of the Federal Labor Relations Authority	5, XIV; 22, XIV
Federal Law Enforcement Training Center	31, VII
Federal Management Regulation	41, 102
Federal Maritime Commission	46, IV
Federal Mediation and Conciliation Service	29, XII
Federal Mine Safety and Health Review Commission	5, LXXIV; 29, XXVII
Federal Motor Carrier Safety Administration	49, III
Federal Prison Industries, Inc.	28, III
Federal Procurement Policy Office	48, 99
Federal Property Management Regulations	41, 101
Federal Railroad Administration	49, II
Federal Register, Administrative Committee of	1, I
Federal Register, Office of	1, II
Federal Reserve System	12, II
Board of Governors	5, LVIII
Federal Retirement Thrift Investment Board	5, VI, LXXVI
Federal Service Impasses Panel	5, XIV
Federal Trade Commission	5, XLVII; 16, I
Federal Transit Administration	49, VI
Federal Travel Regulation System	41, Subtitle F
Fine Arts, Commission on	45, XXI
Fiscal Service	31, II
Fish and Wildlife Service, United States	50, I, IV
Fishery Conservation and Management	50, VI
Food and Drug Administration	21, I
Food and Nutrition Service	7, II
Food Safety and Inspection Service	9, III
Foreign Agricultural Service	7, XV
Foreign Assets Control, Office of	31, V
Foreign Claims Settlement Commission of the United States	45, V
Foreign Service Grievance Board	22, IX
Foreign Service Impasse Disputes Panel	22, XIV
Foreign Service Labor Relations Board	22, XIV
Foreign-Trade Zones Board	15, IV
Forest Service	36, II
General Services Administration	5, LVII; 41, 105
Contract Appeals, Board of	48, 61

Agency	CFR Title, Subtitle or Chapter
Federal Acquisition Regulation	48, 5
Federal Management Regulation	41, 102
Federal Property Management Regulations	41, 101
Federal Travel Regulation System	41, Subtitle F
General	41, 300
Payment From a Non-Federal Source for Travel Expenses	41, 304
Payment of Expenses Connected With the Death of Certain Employees	41, 303
Relocation Allowances	41, 302
Temporary Duty (TDY) Travel Allowances	41, 301
Geological Survey	30, IV
Government Accountability Office	4, I
Government Ethics, Office of	5, XVI
Government National Mortgage Association	24, III
Grain Inspection, Packers and Stockyards Administration	7, VIII; 9, II
Harry S. Truman Scholarship Foundation	45, XVIII
Health and Human Services, Department of	2, III; 5, XLV; 45, Subtitle A,
Centers for Medicare & Medicaid Services	42, IV
Child Support Enforcement, Office of	45, III
Children and Families, Administration for	45, II, III, IV, X
Community Services, Office of	45, X
Family Assistance, Office of	45, II
Federal Acquisition Regulation	48, 3
Food and Drug Administration	21, I
Human Development Services, Office of	45, XIII
Indian Health Service	25, V
Inspector General (Health Care), Office of	42, V
Public Health Service	42, I
Refugee Resettlement, Office of	45, IV
Homeland Security, Department of	2, XXX; 6, I
Coast Guard	33, I; 46, I; 49, IV
Coast Guard (Great Lakes Pilotage)	46, III
Customs and Border Protection Bureau	19, I
Federal Emergency Management Agency	44, I
Human Resources Management and Labor Relations Systems	5, XCVII
Immigration and Customs Enforcement Bureau	19, IV
Immigration and Naturalization	8, I
Transportation Security Administration	49, XII
HOPE for Homeowners Program, Board of Directors of	24, XXIV
Housing and Urban Development, Department of	2, XXIV; 5, LXV; 24, Subtitle B
Community Planning and Development, Office of Assistant Secretary for	24, V, VI
Equal Opportunity, Office of Assistant Secretary for	24, I
Federal Acquisition Regulation	48, 24
Federal Housing Enterprise Oversight, Office of	12, XVII
Government National Mortgage Association	24, III
Housing—Federal Housing Commissioner, Office of Assistant Secretary for	24, II, VIII, X, XX
Housing, Office of, and Multifamily Housing Assistance Restructuring, Office of	24, IV
Inspector General, Office of	24, XII
Public and Indian Housing, Office of Assistant Secretary for	24, IX
Secretary, Office of	24, Subtitle A, VII
Housing—Federal Housing Commissioner, Office of Assistant Secretary for	24, II, VIII, X, XX
Housing, Office of, and Multifamily Housing Assistance Restructuring, Office of	24, IV
Human Development Services, Office of	45, XIII
Immigration and Customs Enforcement Bureau	19, IV
Immigration and Naturalization	8, I
Immigration Review, Executive Office for	8, V
Independent Counsel, Office of	28, VII
Indian Affairs, Bureau of	25, I, V
Indian Affairs, Office of the Assistant Secretary	25, VI

Agency	CFR Title, Subtitle or Chapter
Indian Arts and Crafts Board	25, II
Indian Health Service	25, V
Industry and Security, Bureau of	15, VII
Information Resources Management, Office of	7, XXVII
Information Security Oversight Office, National Archives and Records Administration	32, XX
Inspector General	
Agriculture Department	7, XXVI
Health and Human Services Department	42, V
Housing and Urban Development Department	24, XII
Institute of Peace, United States	22, XVII
Inter-American Foundation	5, LXIII; 22, X
Interior Department	
American Indians, Office of the Special Trustee	25, VII
Endangered Species Committee	50, IV
Federal Acquisition Regulation	48, 14
Federal Property Management Regulations System	41, 114
Fish and Wildlife Service, United States	50, I, IV
Geological Survey	30, IV
Indian Affairs, Bureau of	25, I, V
Indian Affairs, Office of the Assistant Secretary	25, VI
Indian Arts and Crafts Board	25, II
Land Management, Bureau of	43, II
Minerals Management Service	30, II
National Indian Gaming Commission	25, III
National Park Service	36, I
Reclamation, Bureau of	43, I
Secretary of the Interior, Office of	2, XIV; 43, Subtitle A
Surface Mining and Reclamation Appeals, Board of	30, III
Surface Mining Reclamation and Enforcement, Office of	30, VII
Internal Revenue Service	26, I
International Boundary and Water Commission, United States and Mexico, United States Section	22, XI
International Development, United States Agency for	22, II
Federal Acquisition Regulation	48, 7
International Development Cooperation Agency, United States	22, XII
International Fishing and Related Activities	50, III
International Joint Commission, United States and Canada	22, IV
International Organizations Employees Loyalty Board	5, V
International Trade Administration	15, III; 19, III
International Trade Commission, United States	19, II
Interstate Commerce Commission	5, XL
Investment Security, Office of	31, VIII
James Madison Memorial Fellowship Foundation	45, XXIV
Japan–United States Friendship Commission	22, XVI
Joint Board for the Enrollment of Actuaries	20, VIII
Justice Department	2, XXVII; 5, XXVIII; 28, I, XI; 40, IV
Alcohol, Tobacco, Firearms, and Explosives, Bureau of	27, II
Drug Enforcement Administration	21, II
Federal Acquisition Regulation	48, 28
Federal Claims Collection Standards	31, IX
Federal Prison Industries, Inc.	28, III
Foreign Claims Settlement Commission of the United States	45, V
Immigration Review, Executive Office for	8, V
Offices of Independent Counsel	28, VI
Prisons, Bureau of	28, V
Property Management Regulations	41, 128
Labor Department	5, XLII
Benefits Review Board	20, VII
Employee Benefits Security Administration	29, XXV
Employees' Compensation Appeals Board	20, IV
Employment and Training Administration	20, V
Employment Standards Administration	20, VI
Federal Acquisition Regulation	48, 29

Agency	CFR Title, Subtitle or Chapter
Federal Contract Compliance Programs, Office of	41, 60
Federal Procurement Regulations System	41, 50
Labor-Management Standards, Office of	29, II, IV
Mine Safety and Health Administration	30, I
Occupational Safety and Health Administration	29, XVII
Public Contracts	41, 50
Secretary of Labor, Office of	29, Subtitle A
Veterans' Employment and Training Service, Office of the Assistant Secretary for	41, 61; 20, IX
Wage and Hour Division	29, V
Workers' Compensation Programs, Office of	20, I
Labor-Management Standards, Office of	29, II, IV
Land Management, Bureau of	43, II
Legal Services Corporation	45, XVI
Library of Congress	36, VII
Copyright Office	37, II
Copyright Royalty Board	37, III
Local Television Loan Guarantee Board	7, XX
Management and Budget, Office of	5, III, LXXVII; 14, VI; 48, 99
Marine Mammal Commission	50, V
Maritime Administration	46, II
Merit Systems Protection Board	5, II, LXIV
Micronesian Status Negotiations, Office for	32, XXVII
Millenium Challenge Corporation	22, XIII
Mine Safety and Health Administration	30, I
Minerals Management Service	30, II
Minority Business Development Agency	15, XIV
Miscellaneous Agencies	1, IV
Monetary Offices	31, I
Morris K. Udall Scholarship and Excellence in National Environmental Policy Foundation	36, XVI
Museum and Library Services, Institute of	2, XXXI
National Aeronautics and Space Administration	2, XVIII; 5, LIX; 14, V
Federal Acquisition Regulation	48, 18
National Agricultural Library	7, XLI
National Agricultural Statistics Service	7, XXXVI
National and Community Service, Corporation for	45, XII, XXV
National Archives and Records Administration	2, XXVI; 5, LXVI; 36, XII
Information Security Oversight Office	32, XX
National Capital Planning Commission	1, IV
National Commission for Employment Policy	1, IV
National Commission on Libraries and Information Science	45, XVII
National Council on Disability	34, XII
National Counterintelligence Center	32, XVIII
National Credit Union Administration	12, VII
National Crime Prevention and Privacy Compact Council	28, IX
National Drug Control Policy, Office of	21, III
National Endowment for the Arts	2, XXXII
National Endowment for the Humanities	2, XXXIII
National Foundation on the Arts and the Humanities	45, XI
National Highway Traffic Safety Administration	23, II, III; 47, VI; 49, V
National Imagery and Mapping Agency	32, I
National Indian Gaming Commission	25, III
National Institute for Literacy	34, XI
National Institute of Food and Agriculture.	7, XXXIV
National Institute of Standards and Technology	15, II
National Intelligence, Office of Director of	32, XVII
National Labor Relations Board	5, LXI; 29, I
National Marine Fisheries Service	50, II, IV, VI
National Mediation Board	29, X
National Oceanic and Atmospheric Administration	15, IX; 50, II, III, IV, VI
National Park Service	36, I
National Railroad Adjustment Board	29, III
National Railroad Passenger Corporation (AMTRAK)	49, VII
National Science Foundation	2, XXV; 5, XLIII; 45, VI

Agency	CFR Title, Subtitle or Chapter
Federal Acquisition Regulation	48, 25
National Security Council	32, XXI
National Security Council and Office of Science and Technology Policy	47, II
National Telecommunications and Information Administration	15, XXIII; 47, III, IV
National Transportation Safety Board	49, VIII
Natural Resources Conservation Service	7, VI
Navajo and Hopi Indian Relocation, Office of	25, IV
Navy Department	32, VI
Federal Acquisition Regulation	48, 52
Neighborhood Reinvestment Corporation	24, XXV
Northeast Interstate Low-Level Radioactive Waste Commission	10, XVIII
Nuclear Regulatory Commission	5, XLVIII; 10, I
Federal Acquisition Regulation	48, 20
Occupational Safety and Health Administration	29, XVII
Occupational Safety and Health Review Commission	29, XX
Offices of Independent Counsel	28, VI
Oklahoma City National Memorial Trust	36, XV
Operations Office	7, XXVIII
Overseas Private Investment Corporation	5, XXXIII; 22, VII
Patent and Trademark Office, United States	37, I
Payment From a Non-Federal Source for Travel Expenses	41, 304
Payment of Expenses Connected With the Death of Certain Employees	41, 303
Peace Corps	22, III
Pennsylvania Avenue Development Corporation	36, IX
Pension Benefit Guaranty Corporation	29, XL
Personnel Management, Office of	5, I, XXXV; 45, VIII
Human Resources Management and Labor Relations Systems, Department of Defense	5, XCIX
Human Resources Management and Labor Relations Systems, Department of Homeland Security	5, XCVII
Federal Acquisition Regulation	48, 17
Federal Employees Group Life Insurance Federal Acquisition Regulation	48, 21
Federal Employees Health Benefits Acquisition Regulation	48, 16
Pipeline and Hazardous Materials Safety Administration	49, I
Postal Regulatory Commission	5, XLVI; 39, III
Postal Service, United States	5, LX; 39, I
Postsecondary Education, Office of	34, VI
President's Commission on White House Fellowships	1, IV
Presidential Documents	3
Presidio Trust	36, X
Prisons, Bureau of	28, V
Procurement and Property Management, Office of	7, XXXII
Productivity, Technology and Innovation, Assistant Secretary	37, IV
Public Contracts, Department of Labor	41, 50
Public and Indian Housing, Office of Assistant Secretary for	24, IX
Public Health Service	42, I
Railroad Retirement Board	20, II
Reclamation, Bureau of	43, I
Recovery Accountability and Transparency Board	4, II
Refugee Resettlement, Office of	45, IV
Relocation Allowances	41, 302
Research and Innovative Technology Administration	49, XI
Rural Business-Cooperative Service	7, XVIII, XLII, L
Rural Development Administration	7, XLII
Rural Housing Service	7, XVIII, XXXV, L
Rural Telephone Bank	7, XVI
Rural Utilities Service	7, XVII, XVIII, XLII, L
Saint Lawrence Seaway Development Corporation	33, IV
Science and Technology Policy, Office of	32, XXIV
Science and Technology Policy, Office of, and National Security Council	47, II

Agency	CFR Title, Subtitle or Chapter
Secret Service	31, IV
Securities and Exchange Commission	17, II
Selective Service System	32, XVI
Small Business Administration	2, XXVII; 13, I
Smithsonian Institution	36, V
Social Security Administration	2, XXIII; 20, III; 48, 23
Soldiers' and Airmen's Home, United States	5, XI
Special Counsel, Office of	5, VIII
Special Education and Rehabilitative Services, Office of	34, III
State Department	2, VI; 22, I; 28, XI
Federal Acquisition Regulation	48, 6
Surface Mining and Reclamation Appeals, Board of	30, III
Surface Mining Reclamation and Enforcement, Office of	30, VII
Surface Transportation Board	49, X
Susquehanna River Basin Commission	18, VIII
Technology Administration	15, XI
Technology Policy, Assistant Secretary for	37, IV
Technology, Under Secretary for	37, V
Tennessee Valley Authority	5, LXIX; 18, XIII
Thrift Supervision Office, Department of the Treasury	12, V
Trade Representative, United States, Office of	15, XX
Transportation, Department of	2, XII; 5, L
Commercial Space Transportation	14, III
Contract Appeals, Board of	48, 63
Emergency Management and Assistance	44, IV
Federal Acquisition Regulation	48, 12
Federal Aviation Administration	14, I
Federal Highway Administration	23, I, II
Federal Motor Carrier Safety Administration	49, III
Federal Railroad Administration	49, II
Federal Transit Administration	49, VI
Maritime Administration	46, II
National Highway Traffic Safety Administration	23, II, III; 47, IV; 49, V
Pipeline and Hazardous Materials Safety Administration	49, I
Saint Lawrence Seaway Development Corporation	33, IV
Secretary of Transportation, Office of	14, II; 49, Subtitle A
Surface Transportation Board	49, X
Transportation Statistics Bureau	49, XI
Transportation, Office of	7, XXXIII
Transportation Security Administration	49, XII
Transportation Statistics Bureau	49, XI
Travel Allowances, Temporary Duty (TDY)	41, 301
Treasury Department	5, XXI; 12, XV; 17, IV; 31, IX
Alcohol and Tobacco Tax and Trade Bureau	27, I
Community Development Financial Institutions Fund	12, XVIII
Comptroller of the Currency	12, I
Customs and Border Protection Bureau	19, I
Engraving and Printing, Bureau of	31, VI
Federal Acquisition Regulation	48, 10
Federal Claims Collection Standards	31, IX
Federal Law Enforcement Training Center	31, VII
Fiscal Service	31, II
Foreign Assets Control, Office of	31, V
Internal Revenue Service	26, I
Investment Security, Office of	31, VIII
Monetary Offices	31, I
Secret Service	31, IV
Secretary of the Treasury, Office of	31, Subtitle A
Thrift Supervision, Office of	12, V
Truman, Harry S. Scholarship Foundation	45, XVIII
United States and Canada, International Joint Commission	22, IV
United States and Mexico, International Boundary and Water Commission, United States Section	22, XI
Utah Reclamation Mitigation and Conservation Commission	43, III
Veterans Affairs Department	2, VIII; 38, I
Federal Acquisition Regulation	48, 8

Agency	CFR Title, Subtitle or Chapter
Veterans' Employment and Training Service, Office of the Assistant Secretary for	41, 61; 20, IX
Vice President of the United States, Office of	32, XXVIII
Vocational and Adult Education, Office of	34, IV
Wage and Hour Division	29, V
Water Resources Council	18, VI
Workers' Compensation Programs, Office of	20, I
World Agricultural Outlook Board	7, XXXVIII

List of CFR Sections Affected

All changes in this volume of the Code of Federal Regulations that were made by documents published in the FEDERAL REGISTER since January 1, 2001, are enumerated in the following list. Entries indicate the nature of the changes effected. Page numbers refer to FEDERAL REGISTER pages. The user should consult the entries for chapters and parts as well as sections for revisions.

Title 40 was established at 36 FR 12213, June 29, 1971. For the period before January 1, 2001, see the ''List of CFR Sections Affected, 1964–1972, 1973–1985, and 1986–2000'' published in ten separate volumes.

2001

40 CFR

66 FR Page

Chapter I

72.2 Corrected; CFR Correction 42761
72.6 (b)(9) amended 12978
Corrected; CFR correction 42761
72.9 (c)(6), (g)(1) and (h) amended 12978
72.14 Removed 12978
72.70 (b) amended 12978
72.72 (b)(6) removed 12978
72.83 (a)(13) amended 12978
74.2 Amended 12978
75.10 (g) correctly added; CFR correction 31842
75.32 (a)(3) corrected; CFR correction 31842
78.1 (b)(1)(v) removed 12978
78.12 (a)(2) amended 12978
80 Exemption petition 71067
Authority citation revised 5135, 17262
Regulation at 65 FR 71067 eff. date delayed 8089
80.2 (x) and (y) revised; (bb), (nn) and (xx) added 5135
(d) revised 17262
80.24 (c) added 54959
80.29 (a) and (b) revised 5135
80.30 (g)(2)(ii) and (4)(i) revised; (h) added 5135
80.40 (c) added 37164
80.41 (e) and (f) revised 37164
80.46 (f)(3), (g)(9) and (h) revised 53189
(e) and (h) revised 17263
80.65 (d)(2)(ii) revised 37165
(i) revised 67105

40 CFR—Continued

66 FR Page

Chapter I—Continued

80.67 (g)(1) revised 37165
80.68 (c)(8)(ii)(B) amended; (c)(8)(ii)(C) added 37165
80.69 Introductory text revised 37165
80.74 (b)(5) and (6) amended; (b)(7) added 67106
80.75 (a)(2)(vi) and (vii) amended; (a)(2)(viii) added 67106
80.78 (a)(5) and (10) revised; (a)(7)(i) and (ii) amended; (a)(7)(iii) and (11) added 67106
80.81 (a) revised 17263
(a) correctly revised; CFR correction 66769
80.101 (a) revised; (k) added 54431
(g)(9) added 67107
80.104 (a)(2)(xii) added 67107
80.105 (a)(5)(vi) added 67108
80.131 Added 67108
80.162 (a)(3)(i)(B), (ii) and (d) revised 55889
80.169 (c)(4)(i)C)(*2*) revised 55890
80.215 (b) revised 5136
(a)(2) and (3) revised; (a)(4) added 19306
80.216 (a)(1)(i) and (2) revised 19306
80.217 (b) revised 19306
80.220 (c) added 5136
80.225 (d) revised 19306
80.230 (a)(1) revised 19307
80.235 (c)(2), (f) and (g)(1) revised 19307
80.240 (e) added 5136
80.245 (a)(3) revised; (c) added 19307
80.250 (a)(1) and (2) amended; (a)(3) and (4) added; (b) removed 19307

40 CFR—Continued

66 FR Page

Chapter I—Continued

80.285 (a)(1)(i), (ii), (iii), (b)(1)(i), (ii) and (2) revised 19307
80.290 (c)(6) added; (d) revised 19308
80.295 (a) amended; (b) revised; (c) added 19308
80.305 (a) amended; (d) revised 19308
80.310 (b) amended 19308
80.330 (a)(3) and (4) revised 19308
80.335 (a)(2) revised; (d) and (e) added 19309
80.340 (c) added 67108
80.410 (d)(1), (3)(ii), (f)(2)(ii) introductory text and (s) introductory text revised 19309
80.500—80.620 (Subpart I) Added 5136
80.800—80.1045 (Subpart J) Added 17263

2002

40 CFR

67 FR Page

Chapter I

72 Technical correction 1295
72.2 Amended 40420
72.2 Corrected 53504
75 Technical correction 1295
Nomenclature change 40476
75.1 (a) amended 40421
75.4 (b)(2), (c)(2), (d), (e) introductory text and (i)(1) amended; (d)(1), (f) introductory text, (1), (i)(2) and (3) revised; (j) added 40421
75.6 (a)(17), (18), (19), (26) and (35) amended 40422
75.10 (a)(1), (2), (3)(i), (iii), (4), (c), (d)(1), (3) and (f) (a)(5) added; (g) heading revised 40422
75.11 (b)(2), (e)(1), (2), (3) and (iii) amended 40423
75.12 Section heading revised; (a), (d)(2) and (e) amended 40423
75.13 (b) and (c) amended 40423
75.15 Removed 40423
75.16 Section heading, (e) heading, introductory text and (1) through (4) amended; (a) removed; (b) heading, introductory text and (c) revised 40423
(e)(1) corrected 53504
75.17 Section heading, introductory text, (b)(1) and (c) introductory text amended; (c) heading, (1) and (2) revised; (d) added 40424

40 CFR—Continued

67 FR Page

Chapter I—Continued

75.19 Section heading, (a), (b)(1), (2), (3), (4)(i), (5), (c)(1)(i) through (iv)(C), (3)(ii)(C), (D) introductory text, (*1*), (E) through (H) and (e)(2) revised; (b)(4) introductory text, (ii), (iii), (c)(1)(iv) introductory text, (A), (B)(*4*), (D), (E), (G), (H), (*1*), (2) introductory text, (iii), (iv), (3)(i)(A), (B), (4)(i)(A), (ii)(A), (iii)(A), (e) tables and (5) amended; (c)(1)(iv)(B)(3) removed; (c)(1)(iv)(H)(*2*) redesignated as (c)(1)(iv)(H)(*3*) and amended; (c)(1)(iv)(I), (J) and (e)(6) added 40424
(c)(1)(iv)(h)(*3*), (3)(ii)(G) and (H) corrected 53504
75.20 (b)(3)(i), (c)(2)(ii), (iii), (4) introductory text, (i), (ii), (iii), (g)(2), (h)(1), (3), (4) introductory text, (i) and (ii) revised; (a), (3), (4)(iii), (iv), (5)(i), (b)(2), (5), (c) introductory text, (d)(2)(iii), (v), (vii), (g)(1)(i), (5) and (h)(2) amended; second (c)(1)(v) and (h)(4)(iii) removed; (c)(2)(iv) and (h)(5) added 40431
75.21 (a)(7), (8), (9) and (e)(2) amended 40433
(a)(7) corrected 53505
75.22 (a) introductory text, (4) and (5) amended 40433
(a)(4) corrected 53505
75.24 (a)(1) revised; (c)(2) amended 40433
75.30 (a)(6), (b), (d)(1) and (2) amended; (a)(7) and (8) added; eff. 7–12–02 40433
75.31 (a), (c)(2) and (3) amended; (c) introductory text heading and (1) revised; (d) added 40433
75.32 (a) introductory text and (2) revised; (a)(1) and (3) amended 40434
75.33 (a) and (c) introductory text revised; (b)(5), (6), (7), (c)(7), (8), (9), (d), (e) and Tables 3 and 4 added; (c)(1) introductory text, (i), (ii)(A), (2) introductory text, (i), (ii)(A), and (3) through (6) amended 40434
(c)(7) corrected 53505
Corrected 57274

40 CFR—Continued

67 FR Page

Chapter I—Continued

75.34 (a) introductory text, (1) and (d) revised; (a)(2) and (3) redesignated as (a)(3) and (4); new (a)(2) added; new (a)(4) and (c) amended 40438

75.35 Revised 40439

75.36 Section heading and (b) revised; (a) and (d) amended; (c) removed 40439

75.37 (a) and (d) introductory text amended; (c) and (d)(2)(i) revised 40439

75.41 (b)(2)(v)(B) and (c)(2)(ii) amended 40440

75.53 (a)(1), (e)(1)(viii) and (f)(1)(i)(F) revised; (b), (e)(1)(i) introductory text, (D), (E), (ix), (xii) introductory text, (A) through (E), (f)(2)(i)(F), (H), (5) introductory text, (i), (ii)(C) and (E) amended; (c) and (d) removed; (f)(5)(i)(A) through (F) added 40440

Corrected 57274

75.54 Removed 40440

75.55 Removed 40440

75.56 Removed 40440

75.57 Introductory text and (c)(4)(iv) Table 4a revised; (a)(3), (4), (d)(6) and (7) amended 40440

75.58 Introductory text and (b)(3) introductory text revised; (b)(1)(i), (xi), (2)(vii), (3)(i) through (iv), (c) introductory text, (7)(ii), (d) introductory text, (e)(1), (f) introductory text and (1)(iii) amended 40441

75.59 Introductory text, (a)(7)(ii)(P) and (iii)(F) revised; (d)(2) redesignated as (d)(3); (a)(1)(vii), (5)(ii)(E), (F), (L), (iii)(E), (7), (ii)(A), (P), (iii)(F), (10)(i)(E), (12)(v) introductory text, (C), (E), (D), (b)(2)(v), (4)(ii)(K), (L), (c)(1), (d)(1) introductory text, (xi), (xii) and new (3)(x) amended; (d)(1)(xiii) through (xvi) removed; (b)(4)(ii)(M) and new (d)(2) added 40442

75.60 (b)(6) amended; (b(7) added 40442

40 CFR—Continued

67 FR Page

Chapter I—Continued

75.61 (a)(1) introductory text, (i) through (iv), (2) introductory text, (i), (ii), (4), (5) and (ii) amended; (a)(6) revised 40442

75.62 (a)(1) revised; (a)(2) amended 40443

75.63 (a)(1)(i) and (ii) revised; (a)(1)(iii) removed; Section heading, (a)(2) heading, (i), (ii), (iii), (b)(1)(i), (ii) and (2)(i) amended 40443

75.64 (a) introductory text, (2) introductory text, (iii), (iv), (vi), (vii), (viii), (xi), (4), (d) and (f) amended; (a)(2)(v), (8) and (e) removed 40443

75.65 Amended 40443

75.66 (e) and (f) introductory text amended; (i) removed 40444

75.70 (a)(1), (d)(1), (f) introductory text, (1) introductory text, (i) through (iv), (g)(1) and (2) amended; (e) and (g)(6) revised; (f)(1)(v) added; (i) removed 40444

75.71 (a)(1), (2), (b)(1), (3), (c)(2) and (d)(2) amended 40444

Corrected 53505

75.72 (a)(1) introductory text, (i), (b)(1)(ii)(A), (c) and (d) revised; (a)(1)(ii) redesignated as (a)(1)(iii); (a)(1)(ii) added; introductory text, new (a)(1)(iii)(A), (B), (2) introductory text, (ii)(A), (b)(1) introductory text, (2)(ii), (iii), (e) introductory text, (1) introductory text, (i), (2) and (g) amended 40445

75.73 (a), (6) introductory text, (c)(3) and (e)(2) amended; (a)(6)(i) through (vi), (e)(1)(i) and (ii) removed; (e)(1) revised; (a)(8), (d)(6), (f)(1)(vii) and (viii) added 40446

75.74 (c)(2)(i)(D)(*1*), (ii)(C), (H)(*1*), (6)(v), (7)(ii), (8)(ii) and (10) revised; (c)(7)(iii) added; (c)(2)(ii) introductory text, (A), (3)(iii), (iv), (v), (vi)(B), (x), (xi), (xii)(A), (B), (4), (5) and (11) amended 40446

Corrected 57274

75 Appendix A amended 40448, 40449, 40452, 40453, 40455, 40457

Appendix B amended 40456

Appendix C amended 40459

40 CFR—Continued

67 FR Page

Chapter I—Continued
Appendix D amended 40460, 40472
Appendix E amended 40473, 40474
Appendix F amended 40474, 40475
Appendix G amended 40475
Appendices A, B, D and E corrected 53505
Appendices B, D and G corrected 57274
80.8 Added 8736
80.24 Regulation at 66 FR 54959 and 66867 correctly withdrawn 36676
(c) added 36771
80.27 (a)(2) table amended 3440
(b) and (d)(2) revised 8736
Regulation at 67 FR 3440 withdrawn 13092
80.28 (g)(2)(ii) and (4)(i) revised 8736
80.40 (c)(1) revised 8736
80.46 (b), (c), (d), (f), (g) and (h) revised 8737
(a)(2) revised; (h) amended 40181
80.65 (d)(3) revised 8737
80.70 (j) introductory text, (k), (l) and (m) revised; (j)(5) and (n) removed 38403
80.91 (a)(1)(ii) amended; (a)(1)(iii) removed 8737
80.92 (a)(1) amended 8737
80.101 (f)(4) correctly removed; CFR correction 4674
(d)(2), (e)(2) and (h)(2)(iii) removed; (h)(2)(i) and (ii) revised 8738
80.102 Removed 8738
80.104 (a)(1)(i) revised; (a)(2)(ix) removed 8738
80.105 (a)(2) and (3) removed 8738
80.106 (b) removed 8738
80.128 (h) and (i) removed 8738
80.162 Regulation at 66 FR 55889 withdrawn in part 3440
80.195 (b)(4) and (c)(4) revised; (c)(5)(iii) and (6) added 40181
80.205 (a) amended; (f) removed 40182
80.210 (e)(5), (6) and (7) added 40182
80.216 (a) and (f) revised 40182
80.225 (d) revised 38340
(a)(2) revised 40182
80.271 Added 40182
80.275 (a)(1) revised; (a)(2)(i), (ii) and (v) amended; (b)(4), (e)(3) and (h) added; (c)(2) redesignated as (c)(2)(i); new (c)(2)(ii) added 40183
80.285 (b)(1)(ii) revised 40183

40 CFR—Continued

67 FR Page

Chapter I—Continued
80.305 (f) added 40183
80.310 (a) revised; (b) amended; (d) added 40184
Regulation at 57 FR 40184 withdrawn in part 54743
80.315 (a) introductory text and (b)(1) introductory text revised 40184
80.365 (d)(2) revised 40184
80.370 (a)(4) revised; (a)(7)(v), (c)(4) and (5) added 40184
80.385 (b) revised; (g) added eff. 9–10–02 40184
80.395 (a)(5), (6) and (12) revised; (a)(13) added 40184
80.405 (e) added 40185
80.410 (h)(7)(ii) revised 40185
80.415 (a)(2)(iii), (iv) and (b)(6) added; (a)(3) and (g)(4) revised; (a)(4) and (5) removed 40185
Appendices D through G removed 8738

2003

40 CFR

68 FR Page

Chapter I
73 Actions on petitions 51194
80 Meetings 39018
80.2 (z) revised 56780
80.46 (b), (f)(3)(i) and (h) revised 56781
(a) and (h) revised 57819
80.101 (a), (k)(3)(i), (ii), (iii), (vi)(b)(2), (3), (viii) and (6)(iv) revised; (l) added; eff. 7–7–03 24307
80.330 (c)(1) revised 57820
80.340 (b)(2)(ii) revised 57820
80.350 (b)(2) revised 57820
80.855 (c) added; eff. 7–7–03 24309

2004

40 CFR

69 FR Page

Chapter I
78 Authority citation revised 21644
78.1 (a)(1) amended; (b)(6) added 21644
78.2 Amended 21645
78.3 (b)(3)(i) and (c)(7) amended; (d)(2) and (3) redesignated as (d)(3) and (4); new (d)(3) amended; (a)(3) and new (d)(2) added 21645
78.4 (a) amended 21645

40 CFR—Continued

69 FR Page

Chapter I—Continued

78.12 (a)(2) amended 21645
80.2 (f) added; (j), (o), (x), (y) and (xx) revised; (nn) removed; eff. 8-30-04 39166
80.27 (a)(2) table correctly amended; CFR correction 17932
80.230 (b) revised; eff. 8-30-04 39167
80.240 (f) added; eff. 8-30-04 39167
80.500 Heading revised; (f) removed; eff. 8-30-04 39168
80.501 Revised; eff. 8-30-04 39168
80.502 Added; eff. 8-30-04 39168
80.510 Added; eff. 8-30-04 39168
80.511 Added; eff. 8-30-04 39169
80.512 Added; eff. 8-30-04 39170
80.513 Added; eff. 8-30-04 39171
80.520 (b) revised; (d) removed; eff. 8-30-04 39171
80.521 Revised; eff. 8-30-04 39171
80.522 Revised; eff. 8-30-04 39171
80.523 Removed; eff. 8-30-04 39172
80.527 Revised; eff. 8-30-04 39172
80.530 Revised; eff. 8-30-04 39172
80.531 (a)(1), (2), (d)(1), (5), (e)(1) and (2)(i) revised; eff. 8-30-04 39173
80.532 Revised; eff. 8-30-04 39173
80.533 Added; eff. 8-30-04 39174
80.535 Added; eff. 8-30-04 39175
80.536 Added; eff. 8-30-04 39176
80.540 (b), (d), (e) and (f) revised; eff. 8-30-04 39177
80.550 Heading and (a) through (f) revised; eff. 8-30-04 39177
80.551 Revised; eff. 8-30-04 39178
80.552 Heading, (a), (b), (c) and (e) revised; eff. 8-30-04 39179
80.553 (d), (e), (f) and (k) revised; eff. 8-30-04 39179
80.554 Added; eff. 8-30-04 39179
80.555 Added; eff. 8-30-04 39180
80.560 (a), (b), (d), (e), (h), (i), (k) and (l) revised; eff. 8-30-04 39181
80.561 Introductory text, (c), (d) and (f) revised; eff. 8-30-04 39181
80.570 Revised; eff. 8-30-04 39182
80.571 Added; eff. 8-30-04 39182
80.572 Added; eff. 8-30-04 39183
80.573 Added; eff. 8-30-04 39183
80.574 Added; eff. 8-30-04 39183
80.580 Revised; eff. 8-30-04 39184
80.581 Added; eff. 8-30-04 39184
80.582 Added; eff. 8-30-04 39185
80.583 Added; eff. 8-30-04 39186
80.584 Added; eff. 8-30-04 39187
80.585 Added; eff. 8-30-04 39187
80.586 Added; eff. 8-30-04 39188

40 CFR—Continued

69 FR Page

Chapter I—Continued

80.590 Revised; eff. 8-30-04 39188
80.591 Revised; eff. 8-30-04 39189
80.592 Heading, (a), (b) introductory text, (4), (7) introductory text, (c), (d) and (e) revised; eff. 8-30-04 39189
80.593 Heading, (a)(3) and (c)(2) revised; eff. 8-30-04 39190
80.594 Heading, (a)(3), (5), (b) introductory text, (2) and (c) revised; (a)(6), (7), (8) and (e) added; eff. 8-30-04 39190
80.597 Revised; eff. 8-30-04 39190
80.598 Added; eff. 8-30-04 39191
80.599 Added; eff. 8-30-04 39194
80.600 Undesignated center heading removed; section revised; eff. 8-30-04 39196
80.601 Revised; eff. 8-30-04 39198
80.602 Revised; eff. 8-30-04 39199
80.603 Added; eff. 8-30-04 39200
80.604 Added; eff. 8-30-04 39200
80.606 Undesignated center heading and section added; eff. 8-30-04 39201
80.607 Added; eff. 8-30-04 39202
80.608 Added; eff. 8-30-04 39203
80.610 Revised; eff. 8-30-04 39203
80.611 Revised; eff. 8-30-04 39204
80.612 (a) revised; eff. 8-30-04 39204
80.613 Heading, (a) and (d) revised; eff. 8-30-04 39204
80.614 Revised; eff. 8-30-04 39205
80.615 Added; eff. 8-30-04 39208
80.620 Heading, (a), (b), (c), (d)(2), (3)(i)(D), (e)(1), (f)(2)(ii) introductory text, (3)(ii), (g), (h) introductory text, (2), (i)(1)(v), (vi), (5), (j), (k)(1), (3) and (n) through (s) revised; eff. 8-30-04 39208

2005

40 CFR

70 FR Page

Chapter I

72.2 Amended; eff. 7–1–06 25333
Amended; eff. 7–18–05 28677
72.7 (c)(1)(ii) amended; eff. 7–1–06 25334
72.9 (b)(2), (c)(1)(i), (e)(1), (2) introductory text, (g)(6) and (h)(2) amended; eff. 7–1–06 25334
72.21 (b)(1) and (e)(2) amended; eff. 7–1–06 25334

40 CFR—Continued

70 FR Page

Chapter I—Continued

72.24 (a)(5), (7) and (10) removed; eff. 7–1–06 25334
72.40 (a)(1) amended; eff. 7–1–06 25334
72.72 (a)(1), (2) and (3) amended; eff. 7–1–06 25334
72.73 (b)(2) amended; eff. 7–1–06 25334
72.90 (a) amended; eff. 7–1–06 25334
72.95 Introductory text and (a) amended; eff. 7–1–06 25334
72.96 (b) amended; eff. 7–1–06 25334
73.10 (a), (b)(1) and (2) amended; eff. 7–1–06 25335
73.27 (c)(3) and (5) amended; eff. 7–1–06 25335
73.30 (a) and (b) amended; eff. 7–1–06 25335
73.31 (a), (b) and (c)(1)(v) amended; eff. 7–1–06 25335
73.32 Removed; eff. 7–1–06 25335
73.33 (b) and (c) removed; eff. 7–1–06 25335
73.34 (a) and (b) revised; (c) introductory text amended; eff. 7–1–06 25335
73.35 (a) introductory text, (1), (2), (i), (ii), (b)(1), (2), (c)(2) and (d) amended; (a)(2)(iii), (b)(3) and (e) removed; (a)(3) added; (c)(1) revised; eff. 7–1–06 25335
73.36 (a) and (b) amended; eff. 7–1–06 25336
73.37 Revised; eff. 7–1–06 25336
73.38 (a) and (b) amended; eff. 7–1–06 25336
73.50 (a), (b)(1)(ii) and (2)(ii) amended; (b)(3) removed; eff. 7–1–06 25336
73.51 Removed; eff. 7–1–06 25336
73.52 (a) introductory text amended; (a)(1), (2), (3) and (b) revised; (a)(4) removed; (c) added; eff. 7–1–06 25336
73.70 (e), (f) and (i)(1) amended; eff. 7–1–06 25336
74.4 (c)(1) and (2) amended; eff. 7–1–06 25336
74.18 (d) amended; eff. 7–1–06 25336
74.40 (a) and (b) amended; eff. 7–1–06 25336
74.42 Revised; eff. 7–1–06 25336
74.43 (a), (b)(7) and (8) amended; eff. 7–1–06 25337
74.44 (c)(1)(ii), (2)(iii)(C), (D), (E) introductory text, (3) and (F) amended; eff. 7–1–06 25337
74.46 (b)(2) removed; eff. 7–1–06 25337

40 CFR—Continued

70 FR Page

Chapter I—Continued

74.47 (a)(3)(iv), (v), (6), (c), (d)(1)(ii)(C), (D), (2)(i), (B) and (ii) amended; eff. 7–1–06 25337
74.49 (a) introductory text amended; eff. 7–1–06 25337
74.50 (a)(2) introductory text, (i), (b) and (d) amended; eff. 7–1–06 25337
75.2 (d) added; eff. 7–18–05 28678
75.6 Introductory text amended; (a)(38) through (41) redesignated as (a)(39) through (42); new (a)(38), (43) and (44) added; (b) through (e) revised; eff. 7–18–05 28678
(b) introductory text, (c), (d) introductory text and (e) introductory text revised 51268
75.10 (d)(1) and (3) amended; eff. 7–18–05 28678
75.15 Added; eff. 7–18–05 28678
75.20 (a)(5)(i), (c)(1) and (d)(2)(v) revised; (b) introductory text amended; (c)(9) and (10) redesignated as (c)(10) and (11); new (c)(9) added; eff. 7–18–05 28679
75.21 (a)(3) revised; eff. 7–18–05 28679
75.22 (a)(7) and (b)(5) added; eff. 7–18–05 28679
75.24 (d) revised; eff. 7–18–05 28680
75.31 (a) amended; (b) introductory text, (1) and (2) revised; eff. 7–18–05 28680
75.32 (a) introductory text amended; eff. 7–18–05 28680
75.33 Table 1 revised; eff. 7–18–05 28680
75.38 Added; eff. 7–18–05 28681
75.39 Added; eff. 7–18–05 28681
75.53 (e)(1)(i)(E), (iv) introductory text and (x) revised; eff. 7–18–05 28682
75.57 (i) and (j) added; eff. 7–18–05 28682
75.58 (b)(3) introductory text, (i) and (ii) revised; eff. 7–18–05 28683
75.59 (a)(1) introductory text, (3) introductory text, (5) introductory text, (ii) introductory text, (6) introductory text, (9) introductory text, (vi) and (c) introductory text revised; (a)(7)(vii), (viii) and (14) added; eff. 7–18–05 28683
75.80—75.84 (Subpart I) Added; eff. 7–18–05 28684

40 CFR—Continued

70 FR Page

Chapter I—Continued

75 Appendix A amended; eff. 7–18–05 ..... 28690, 28691, 28692
Appendix B amended; eff. 7–18–05 28693
Appendix F amended; eff. 7–18–05 28695
Appendix K added; eff. 7–18–05 28695
77.3 (a), (b), (c), (d) introductory text and (1) through (5) amended; eff. 7–1–06 25337
77.4 (b)(1), (c)(1)(ii)(A), (d)(1), (2), (3), (e)(iv), (g)(2)(ii), (3)(ii), (iii) and (k)(2) amended; eff. 7–1–06 25337
77.5 (b) and (c) amended; (d) removed; eff. 7–1–06 25337
77.6 (a)(1), (b)(1)(i)(A), (3), (c) and (f) amended; eff. 7–1–06 25337
78 Heading revised; eff. 7–11–05 25338
78.1 (a)(1) amended; (b)(2)(i) revised; (b)(7), (8) and (9) added; eff. 7–11–05 25338
78.3 (b)(3)(i), (c)(7) and (d)(3) amended; (a)(4), (5), (6), (d)(5), (6) and (7) added; eff. 7–11–05 25338
78.4 (a) amended; eff. 7–11–05 25339
78.5 (a) amended; eff. 7–11–05 25339
78.12 (a) introductory text and (2) amended; eff. 7–11–05 25339
78.13 (b) amended; eff. 7–11–05 25339
80.2 (c) Footnote 1 and (ee) revised; (ww) added 74566
80.41 (p) revised 74566
80.45 (c)(1)(iv)(C)(*6*), (D)(*6*) and (d)(1)(iv)(B) revised 74566
80.49 (a) introductory text, (3) introductory text and (b) introductory text revised; (a)(1) table amended 74567
80.50 (a)(2) revised 74567
80.65 (d)(2)(iii), (vi)(C), (D), (E) and (g) removed; (e) heading and (e)(1) revised; (e)(2)(ii)(B) amended 74567
80.67 (h)(1)(iv) revised 74568
80.68 (b)(2)(ii) amended; (c)(9)(i)(B), (ii)(B), (10)(ii), (11), (12) and (13)(iii) revised; (c)(10)(iii), (iv), (v) and Footnote 2 added 74568
80.69 (a)(4) removed; (e)(2)(i)(A) and (v) introductory text revised 74569
80.70 (m) introductory text amended; (m)(1) and (2) revised 71705

40 CFR—Continued

70 FR Page

Chapter I—Continued

80.74 (b)(2) and (f) removed; (b)(7)(ii) revised; (b)(8) and (9) added 74569
80.75 (a) introductory text, (2)(vii) and (viii)(D) revised; (a)(2)(ix), (x) and (o) added 74569
80.76 (b) revised 74570
80.77 (c), (f), (g)(3) and (i) revised; (j) removed 74570
80.78 (a)(1)(iii) and (3) removed; (a)(11) introductory text revised; (a)(12) added 74570
80.81 (c)(2), (5), (6), (10) and (g)(1)(vi) revised; (c)(4) and (g)(1)(vii) removed 74570
(a), (c) introductory text, (e)(2) introductory text, (3)(i), (g)(1) introductory text, (h)(1) introductory text, (ii)(A), (C) and (2)(i) revised 75920
80.82 Revised 74570
80.83 Revised 74571
80.101 (g)(9) heading and (i) through (iv) revised; (i)(3) added 74572
80.104 (a)(2)(xiii), (xiv) and (xv) added 74573
80.105 (a)(5)(iv), (v), (vi)(D) and (c) revised; (a)(5)(vii), (viii) and (7) added 74573
80.106 (a)(1)(v) and (vi) revised; (a)(1)(vii) removed 74573
80.125 (a)(1), (2) and (3) added 74573
80.126 (e) and (f) revised; (h) through (l) added 74574
80.128 Heading, introductory text, (e)(2), (4) and (5) revised; (e)(6) removed 74574
80.129 Heading, introductory text, (a), (d)(3)(iii) and (iv) revised; (d)(3)(v) removed 74574
80.131 Revised 74574
80.133 Added 74576
80.134 Added 74577
80.162 (a)(3)(i)(B) and (ii) revised 69245
80.211 Added 74578
80.215 (a)(2)(i) amended 70509
80.410 (f)(4)(ii) and (r)(1)(iv) revised 74578
80.500 (b) and (c) revised 70509
80.502 (b)(2) and (4) revised 70509
80.510 (h) introductory text revised 40895
80.525 (a) and (c) revised 40895

40 CFR—Continued

70 FR Page

Chapter I—Continued

80.531 (a)(2) amended; (c)(1), (2)(i) and (d)(1) revised; (d)(4) removed 40895
(c)(2)(ii) removed 70510
80.533 (e)(2) revised 70510
80.550 (b)(3) revised 40896
80.551 (f) revised 40896
80.580 (c)(1) and (2)(i) revised 40896
(d) revised 70510
80.586 Heading revised 40896
80.590 (a)(6)(i) revised 40896
(a)(6)(i) and (d) revised 70510
80.591 (b)(3) revised 40896
80.592 (a)(2)(iii) revised 70510
80.593 (a)(7)(i) revised 70510
80.594 (b)(2) revised 40896
80.595 (a) amended; (b) revised 40896
80.596 (a) amended 40896
80.597 (c) revised; (d)(3) added 70510
80.598 (b)(9)(vi) revised 70511
80.599 (a) introductory text and (1) revised; (b)(1), (2), (4), (c)(1), (3), (d)(1), (2)(ii) and (e)(2) through (5) amended 40896
(a) introductory text table, (1) table, (b)(4), (e)(2) and (3) revised 70511
80.600 (a)(6), (b)(1) introductory text, (i) introductory text, (ii) introductory text, (iii) introductory text, (iv) introductory text, (v) introductory text and (2) revised; (a)(13) added; (b)(3) amended 40898
(b)(1)(i) introductory text, (C), (D), (3) and (i) through (l) revised; (m) added 70511
80.601 (a)(2), (b) introductory text and (1) revised; (a)(4)(iii), (iv), (v) and (b)(3)(ii) through (ix) redesignated as (a)(4)(iv), (v), (vi) and (b)(3)(iii) through (x); new (a)(4)(iii) and (b)(3)(ii) added 40898
(a) introductory text, (1), (2), (4)(v), (b) introductory text, (d) introductory text, (1)(i) through (iv) and (3) revised; (d)(1)(v), (vi) and (vii) added 70512
80.602 (a)(2)(iii), (b) introductory text, (d) and (e) revised; (f) added 70513
80.604 (d)(5) removed 40899
80.613 (a)(1) introductory text revised 40899
80.855 (b)(1)(i) and (ii) revised; (b)(2) removed 58335

40 CFR—Continued

70 FR Page

Chapter I—Continued

80.1100 (Subpart K) Added 77335

2006

40 CFR

71 FR Page

Chapter I

72.2 Amended 25377
72.7 (f)(2) revised; (f)(4)(i) amended 25377
72.8 (d)(4) revised; (d)(6)(i) introductory text amended 25377
72.20 (b) amended 25378
72.22 (b) amended 25378
72.23 (a), (b) and (c)(1) amended 25378
72.24 (a)(1), (6) and (9)(ii) amended 25378
72.25 (b) amended 25378
72.26 Added 25378
73.31 (c)(1)(v) amended 25378
73.33 (d)(4), (e) and (f) amended; (g) added 25378
74.4 (c) removed 25379
78.1 (b)(8)(ii) amended; (b)(10), (11) and (12) added 25379
78.3 (b)(3)(i) and (d)(3) amended; (a)(7), (8), (9), (d)(8), (9) and (10) added 25379
80 Authority citation revised 31959
Technical correction 58498
80.2 (ii) revised 8982, 26698
(z) revised 16499
(ccc) revised; (sss) added 25716
Regulation at 71 FR 8982 withdrawn 26420
80.9 Added 16499
80.41 (e) table and (f) table amended; (o)(4) added 8972
(e) table and (f) table amended; (o) removed; (q) heading, introductory text and (1) revised 8982, 26698
Regulation at 71 FR 8982 withdrawn 26420
80.46 (a)(1), (2), (3)(i), (ii), (iii), (4), (b), (f)(3)(i), (g)(2)(i) and (h) revised; (a)(3)(iv) added 16499
80.65 Heading, (c)(1)(ii), (3), (d)(2)(vi) and (h) revised; (c)(1)(iii), (2) and (d)(2)(v)(D) removed 8982
Regulation at 71 FR 8982 withdrawn 26420

40 CFR—Continued

71 FR Page

Chapter I—Continued

(d)(2)(vi) stay lifted; heading, (c)(1)(ii), (3), (d)(2)(vi), (3) and (h) revised; (c)(1)(iii), (2) and (d)(2)(v)(D) removed 26698

80.67 (a)(1), (2)(i)(A), (g) introductory text, (3) introductory text, (5) introductory text, (6) introductory text, (h)(1) introductory text, (iv), (v) and (3)(ii) revised; (b)(3), (f), (g)(5)(i), (6)(i), (h)(1)(vi), (vii) and (viii) removed 8982

Regulation at 71 FR 8982 withdrawn 26420

(a)(1), (2)(i)(A), (g) introductory text, (3), (5) introductory text, (6) introductory text, (h)(1) introductory text, (iv), (v) and (3)(ii) revised; (b)(3), (f), (g)(5)(i), (6)(i), (h)(1)(vi), (vii) and(viii) removed; (g)(7) added 26699

80.68 (a) introductory text, (3), (b) introductory text, (4)(i), (ii), (c)(3), (4)(i) and (13)(v)(L) revised; (c)(12) removed 8983, 26699

Regulation at 71 FR 8983 withdrawn 26420

80.69 (a)(6)(ii), (iii), (10) introductory text, (b), (d) and (e) revised; (a)(6)(iv), (8), (9) and (c) removed 8983, 26700

Regulation at 71 FR 8983 withdrawn 26420

(a)(11) added; eff. 8–1–06 31959

80.70 (k)(2) added 77620

80.73 Introductory text revised 8984, 26700

Regulation at 71 FR 8984 withdrawn 26420

80.74 (c) heading, introductory text, (2) and (d) introductory text revised 8984

Regulation at 71 FR 8984 withdrawn 26420

(c) introductory text, (2) and (d) introductory text revised 26700

(b)(10) added; eff. 8–1–06 31961

80.75 Introductory text, (a) introductory text, (h), (i), (l), (m) and (n)(2) revised; (a)(2)(vii) and (f) removed 8984, 26700

Regulation at 71 FR 8984 withdrawn 26420

(a)(2) correctly reinstated; CFR correction 67065

40 CFR—Continued

71 FR Page

Chapter I—Continued

(a)(2)(ix) and (x) reinstated; CFR correction 77266

80.76 (a) revised 8984, 26701

Regulation at 71 FR 8984 withdrawn 26420

80.77 (g)(2)(ii) removed; (i)(1) revised 8984

Regulation at 71 FR 8984 withdrawn 26420

(g)(2)(ii) removed; (i)(2) revised 26701

(g)(2)(iv)(B) and (3) revised; (g)(4) added; eff. 8–1–06 31961

80.78 (a)(1)(ii)(C), (8)(1) through (iv) and (11)(iv)(D) added 8972

(a)(1)(ii) removed; (a)(8) and (11)(iv) revised; 8985

Regulation at 71 FR 8985 withdrawn in part 26420

(a)(1)(ii) removed; (a)(11)(iv) revised 26701

80.79 (a)(5) added; (c)(1) amended 8973

(a)(5) amended; (c)(1) revised 8985

(a)(5) and (c)(1) correctly revised; regulation at 71 FR 8985 withdrawn in part 26420

(c)(1) revised 26701

(a)(5) correctly revised 27533

80.81 (d), (e)(3) and (h)(1) introductory text revised; (e)(2) removed 8973

(b)(1) and (2) revised 8985, 26701

Regulation at 71 FR 8985 withdrawn 26420

80.84 Added; eff. 8–1–06 31961

80.104 Introductory text, (a) introductory text and (b) revised; (c) added; eff. 8–1–06 31963

80.125 (a), (c) and (d) introductory text revised 8985, 26701

Regulation at 71 FR 8985 withdrawn 26420

80.126 (b) revised 8985, 26701

Regulation at 71 FR 8985 withdrawn 26420

80.128 (e)(2) revised 8986, 26702

Regulation at 71 FR 8986 withdrawn 26420

80.129 Removed 8986, 26702

Regulation at 71 FR 8986 withdrawn 26420

(a), (d)(3)(iii), (iv) and (v) stay lifted 26698

80.130 (a) revised 8986, 26702

40 CFR—Continued

71 FR Page

Chapter I—Continued

Regulation at 71 FR 8986 withdrawn 26420
80.133 (h)(1) and (4) revised 8986, 26702
Regulation at 71 FR 8986 withdrawn 26420
80.134 Removed 8986, 26702
Regulation at 71 FR 8986 withdrawn 26420
80.213 Added; eff. 8–1–06 31963
80.285 (b)(1)(ii) revised 54912
80.310 (a) and (b) revised 54912
80.365 (b)(8) added; eff. 8–1–06 31964
80.382 Added 78093
80.415 (a)(2)(iii) revised 54912
80.500—80.620 (Subpart I) Heading revised 25716
80.502 (b)(1)(iii), (d)(1), (2) and (f) added 25716
80.520 (b)(2) introductory text revised 25717
80.527 (c) introductory text, (3), (4) and (e)(2) revised 25717
80.531 (a)(5)(i), (ii) and (d)(2) revised; (a)(5)(v) and (c)(5) added 25717
80.532 (d)(1)(i) revised 25717
80.533 Heading, (d)(2), (e)(1), (f), (g) and (h) revised; (c)(2)(iii), (e) introductory text and (i) added 25717
80.535 (a)(1)(i) and (c)(1)(i) revised 25718
80.551 (f) added 25718
80.553 (b) and (d) revised 25718
80.554 (d)(1)(i), (ii) and (3)(i) revised 25718
80.570 (e) revised 25718
80.571 (f) revised 25718
80.572 (f) revised 25718
80.573 (c) revised 25718
80.574 (d) revised 25719
80.580 (b)(1) and (c)(1) removed; (c)(2)(i) and (e)(1)(v) revised 16500
(d) revised 25719
80.581 (c)(1) revised 25719
80.590 (a)(7) introductory text and (i) revised; (i) added 25719
80.591 (b)(3), (4)(i), (ii) and (iii) revised 25719
80.592 (f) added 25719
80.595 Heading revised 25720
80.597 (c)(1) introductory text and (2) introductory text revised; (c)(1)(iv) and (5) added 25720

40 CFR—Continued

71 FR Page

Chapter I—Continued

80.598 (a)(3)(iv) and (vi) revised; (a)(2)(v)(C), (b)(2)(iii), (iv), (3)(iv), (v), (4)(iv) and (9)(xvi) added 25720
80.599 (b)(2), (e)(2), (4) and (5) revised; (h) added 25720
80.600 (a)(1)(v), (vi), (3)(ii), (iii), (4)(i), (ii), (b)(1)(i)(D), (ii)(G), (H), (iii)(B), (C), (iv)(A), (B), (v)(A), (B), (vi)(A), (B), (vii)(B), (C), (viii)(A) and (B) revised; (a)(1)(vii), (viii), (ix), (3)(iv), (4)(iii), (b)(1)(i)(E) through (H), (ii)(I) through (L), (iii)(D), (iv)(C), (v)(C), (vi)(C), (vii)(D), (viii)(C), (n) and (o) added 25721
80.601 (a) introductory text, (1)(i), (2)(i), (4)(v), (vi) and (b) introductory text revised; (b)(4) and (f) added 25722
80.602 (g) added 25723
80.614 Heading, introductory text, (a), (b), (c), (e), (f)(1) introductory text, (i) through (vi), (vii) introductory text, (D), (viii), (2) introductory text, (i), (iii), (iv), (vi), (vii), (5), (6)(i) through (iv), (7) introductory text, (i), (ii) and (iii) revised 25723
80.616 Added 25725
80.617 Added 25726
80.840 Added; eff. 8–1–06 31964

2007

40 CFR

72 FR Page

Chapter I

72 Actions on petitions 35354
72 Authority citation revised 59205
72.2 Amended 51527
72.24 (a)(9) introductory text amended 59205
73 Actions on petitions 35354
74 Actions on petitions 35354
75.15 (f) and (j) revised; (k) added 51527
75.20 (d)(2)(ix) added 51527
75.57 (j)(7) revised 51528
75.81 (a)(1) revised 51528
75.84 (f)(1)(ii)(J) revised 51528
75 Appendices A, B and K amended 51528
75 Appendix K corrected 55279
78 Actions on petitions 35354
78 Authority citation revised 59205

40 CFR—Continued

72 FR Page

Chapter I—Continued

78.1 (a)(1) revised 59205
80 Authority citation revised 8542
80.41 (e) and (f) redesignated as (e)(1) and (f)(1); (e)(2), (3), (f)(2) and (3) added..... 8543
80.65 (f)(2)(iv) and (v) amended 2427
80.68 (a), (b) and (c) redesignated as (b), (c) and (d); new (a) added; new (b)(2), (c) introductory text, (2)(i), (ii), (3), (4)(i), (d)(1)(ii)(A), (B), (2)(i), (8)(i)(C), (9)(ii)(B), (10)(v), (11)(ii) and (13)(v)(G) amended 8543
80.70 Regulation at 71 FR 77620 withdrawn..... 14681
(k)(2) added 20242
80.91 (e)(2)(ii)(A) revised 60579
80.93 (d) revised..... 60579
80.101 (c)(3) and (4) added..... 8543
80.101 (f)(2), (4)(iii), (g)(1)(ii)(B), (2) introductory text, (i) and (6) revised; (f)(3) and (g)(1)(ii)(C) added..... 60580
80.104 (a)(2)(xiii) added..... 60581
80.125 (e) amended 2427
80.128 (a) revised..... 8543
80.815 (d)(1) redesignated as (d)(1)(i); (d)(1)(ii) added..... 8544
80.825 (c)(2) revised 60581
80.850 (c) revised; (d) added 60581
80.855 (b)(2) added..... 60582
80.910 (a) revised 60582
80.915 (e) through (h) redesignated as (f) through (i); new (e) added..... 60582
80.1035 (h) added 8544
80.1100 Revised; eff. 9–1–07 23991
80.1101 Added; eff. 9–1–07 23992
80.1104 Added; eff. 9–1–07 23993
80.1105 Added; eff. 9–1–07 23993
80.1106 Added; eff. 9–1–07 23993
80.1107 Added; eff. 9–1–07 23993
80.1115 Added; eff. 9–1–07 23995
80.1125 Added; eff. 9–1–07 23995
80.1126 Added; eff. 9–1–07 23995
80.1127 Added; eff. 9–1–07 23995
80.1128 Added; eff. 9–1–07 23995
80.1129 Added; eff. 9–1–07 23995
80.1130 Added; eff. 9–1–07 23995
80.1131 Added; eff. 9–1–07 23995
80.1132 Added; eff. 9–1–07 23995
80.1141 Added; eff. 9–1–07 23999
80.1142 Added; eff. 9–1–07 23999
80.1143 Added; eff. 9–1–07 23999
80.1150 Added; eff. 9–1–07 24000
80.1151 Added; eff. 9–1–07 24000

40 CFR—Continued

72 FR Page

Chapter I—Continued

80.1152 Added; eff. 9–1–07 24000
80.1153 Added; eff. 9–1–07 24000
80.1154 Added; eff. 9–1–07 24000
80.1155 Added; eff. 9–1–07 24000
80.1160 Added; eff. 9–1–07 24003
80.1161 Added; eff. 9–1–07 24003
80.1163 Added; eff. 9–1–07 24004
80.1164 Added; eff. 9–1–07 24004
80.1165 Added; eff. 9–1–07 24004
80.1166 Added; eff. 9–1–07 24004
80.1167 Added; eff. 9–1–07 24004
80.1200—80.1363 (Subpart L) Added 8544

2008

40 CFR

73 FR Page

Chapter I

72 Policy statement..... 75954, 75959
72.2 Amended 4340
73 Policy statement..... 75954, 75959
74 Policy statement..... 75954, 75959
75.4 (d) revised..... 4340
75.6 (a)(1) through (4), (6) through (15), (17), (19), (21) through (29), (31) through (42), (b)(1) through (4), (6), (d)(1) and (2) amended; (a)(5), (16), (18), (20) and (30) removed; (a)(45) through (49) and (f)(4) added; (f)(1) and (3) revised 4341
75.11 Heading, (d)(3), (e) introductory text, (1), (3) introductory text and (f) revised; (b)(1) amended; (e)(2) removed; (e)(4) added 4342
75.12 Heading and (e)(3) revised; (b) amended..... 4342
75.13 (d)(3) revised 4343
75.14 (e) added..... 4343
75.15 Introductory text amended; (h) revised; (l) added 4343
75.16 (b)(1)(ii) revised; (e)(1) and (3) amended 4343
75.17 (d)(2) revised 4343
75.19 (a)(1), (c)(1)(i), (iv)(A)(*3*), (3)(ii)(B)(*2*), (H) and (4)(ii) heading revised; (c)(1)(iv)(A), (G) and (4)(i)(A) amended; (c)(1)(iv)(I)(*3*) through (*6*) and (4)(ii)(D) added 4344
75.20 (b) introductory text amended; (c)(1)(v) revised; (f)(1) and (2) removed 4345
75.21 (a)(4) amended..... 4345

40 CFR—Continued

73 FR Page

Chapter I—Continued

75.22 (a) introductory text, (5), (6), (7), (b) introductory text, (5) and (c)(1) introductory text revised; (b)(3) amended; (b)(6), (7) and (8) added 4345
75.31 (c)(3) amended 4346
75.32 (b) revised 4346
75.33 Heading, (c)(8)(iii), (iv) Tables 1 and 2 and (e)(3) Table (3) revised; (b)(1) introductory text, (2) introductory text, (3), (4), (c)(1) introductory text, (2) introductory text, (3), (4), (d)(1) introductory text, (2) introductory text, (3) introductory text and (4) introductory text amended 4346
75.34 (a) introductory text and (3) revised; (a)(2)(ii) and (d) amended; (a)(5) added 4348
75.38 (a) and (c) revised 4349
75.39 (a) through (d) revised; (f) added 4349
75.53 (a)(1) revised; (a)(2) amended; (e)(1)(xiv), (g) and (h) added 4350
75.57 (b)(3), (i)(1)(iv), (2) and (j)(2) amended; (c)(4)(iv) Table 4a revised 4353
75.58 (b)(3) introductory text and (f)(1)(iii) revised; (b)(3)(iii) and (iv) amended; (c)(1)(xii), (xiii), (4)(x), (5)(ii), (d)(1)(ix), (x), (2)(ix), (x), (f)(1)(xi), (xii) and (2)(x) amended; (c)(1)(xiv), (4)(xi), (d)(1)(xi), (2)(xi), (f)(1)(xiii) and (xiv) added 4354
75.59 (a)(1)(i), (xi), (2)(i), (3)(i), (ii), (4)(i), (vi)(L), (M), (vii)(K), (L), (6)(i), (ix), (13), (b)(1)(ii), (2)(i), (4)(i)(A), (H), (I), (ii)(L), (M), (5)(i)(B), (H), (ii)(B), (iii)(B), (iv)(A), (G), (H), (d)(1)(xi), (xii), (2)(iii), (iv) and (v) amended; (a)(1)(viii), (6) introductory text, (7)(viii) heading, (8), (b)(4)(ii)(A), (B) and (F) revised; (a)(4)(vi)(N), (vii)(M), (7)(ix), (x), (b)(4)(i)(J), (ii)(N), (5)(iv)(I), (d)(i)(xiii), (2)(vi), (vii), (e) and (f) added; (a)(12)(iii) removed 4354
75.60 (b)(8) added 4356

40 CFR—Continued

73 FR Page

Chapter I—Continued

75.61 (a)(1) introductory text and (5) introductory text amended; (a)(3) revised; (a)(7) and (8) added 4356
75.62 (a)(1) revised; (a)(2) amended 4357
75.63 (a)(1)(i)(A), (ii)(B) and (2)(i) amended; (a)(1)(ii)(A), (2)(iii) and (b)(2)(iv) revised; (b)(2)(iii) removed 4357
75.64 (a)(8) removed; (a)(2)(xiv) and (3) through (7), (9), (10) and (11) redesignated as (a)(2)(xiii) and new (8) through (15); (a) introductory text and new (2)(xiii) revised; new (a)(3) through (7) added; new (a)(14) amended 4357
75.66 (f) removed 4358
75.71 Heading and (e) revised; (a)(1) and (2) amended 4358
75.72 Heading, introductory text and (c)(3) revised; (f) removed 4358
75.73 (c)(3), (f)(1) introductory text and (ii)(K) revised; (e)(1), (2) and (f)(1)(ii) introductory text amended 4359
75.74 (c)(2) introductory text, (i) introductory text, (C), (ii) introductory text, (E), (3)(xi), (xii)(A), (B) and (6)(v) amended; (c)(2)(i)(D), (ii)(F), (3)(ii), (6)(iii), (7)(iii)(L), (8)(ii) and (11) revised; (c)(2)(ii)(G), (H), (3)(vi), (vii) and (viii) removed 4360
75.80 (f)(1)(iii) amended 4361
75.81 (a)(3) and (d)(1) amended; (a)(4), (c)(1), (2), (d)(2), (5) and (e)(1) revised; (d)(4)(iv) added 4361
75.82 (b)(3), (c)(4) and (d)(3) added; (c)(2), (3), (d)(1) and (2) amended 4362
75.84 (c)(3), (e)(1), (2), (f)(1)(i) and (ii) introductory text amended; (f)(1) introductory text and (ii)(I) revised 4363
75 Appendix A amended 4363
Appendix A stayed in part 65556
Appendix B amended 4367
Appendix D amended 4369
Appendices E and F amended 4372
Appendices G and K amended 4376
Appendix F corrected 8408

40 CFR—Continued

73 FR Page

Chapter I—Continued

77 Policy statement.....75954, 75959
78 Policy statement.....75954, 75959
79 Policy statement.....22277
79.68 (f)(5)(vii) correctly reinstated.....34875
80.2 (z) revised.....74355
80.22 (f) revised; (g) added.....59178
80.27 (a)(2)(ii) table amended.....8209
80.46 (a)(1), (3)(i) through (iv), (b), (c), (d), (e)(1), (f)(1), (3)(i), (g)(1), (2)(i) and (h) revised.....74355
80.580 (b)(2), (c)(2)(i) and (e) revised.....74357
80.1101 (d)(2) and (3) revised.....57254
80.1107 (c) introductory text revised.....57255
80.1126 (a)(1), (b) and (d)(1) revised.....57255
80.1127 (b)(2) revised.....57255
(b)(2) corrected.....71560
80.1128 (a)(5)(ii), (iii) and (6) revised; (a)(5)(iv), (v) and (7) removed.....57255
80.1129 (b)(1), (2), (4), (6) and (d) revised; (b)(8) added.....57255
Regulation at 73 FR 57255 withdrawn in part.....71941
80.1131 (a)(8) added; (b)(4) removed.....57256
Regulation at 73 FR 57256 withdrawn.....71941
80.1132 Heading, (a), (b) introductory text and (c) revised.....57256
80.1141 (a)(1) and (b)(2)(ii) revised; (a)(4) added.....57256
80.1142 (a)(1) introductory text and (e) revised; (a)(4) added.....57256
80.1151 (a)(3)(i), (b)(4)(i) and (d)(3)(i) revised.....57256
80.1152 (c)(1)(iii) removed; (c)(1)(v) and (2) revised.....57256
80.1153 (a)(5)(iii) revised.....57257
80.1154 (a)(4) added; (b) revised.....57257
80.1160 (a) and (b)(1) revised; (f) added.....57257
80.1164 (a)(1)(ii) through (v), (2)(i), (ii), (3)(ii), (b)(1)(ii), (iii), (iv), (2)(i), (ii), (3)(ii), (c)(1)(i), (ii) and (2)(ii) revised; (a)(1)(vi), (vii), (viii), (2)(iii), (b)(2)(iii), (c)(1)(iii), (e) and (f) added.....57257
80.1165 (f)(1)(vi) and (o)(2) revised.....57258
80.1166 (o)(2) revised.....57258
80.1167 (e) introductory text and (j)(2) revised.....57259

40 CFR—Continued

73 FR Page

Chapter I—Continued

80.1275 (d)(2) redesignated as (d)(3); (d)(1)(v) and new (2) added.....13136
Regulation at 73 FR 13136 withdrawn.....26325
80.1275 (d)(2) redesignated as (d)(3); (d)(1)(v) and new (2) added.....61363

2009

40 CFR

74 FR Page

Chapter I

72 Regulation at 73 FR 75954 withdrawn.....13124
Policy statement; eff. 8–11–2009.....27940
73 Regulation at 73 FR 75954 withdrawn.....13124
Policy statement; eff. 8–11–2009.....27940
74 Regulation at 73 FR 75954 withdrawn.....13124
Policy statement; eff. 8–11–2009.....27940
77 Regulation at 73 FR 75954 withdrawn.....13124
Policy statement; eff. 8–11–2009.....27940
78 Regulation at 73 FR 75954 withdrawn.....13124
Policy statement; eff. 8–11–2009.....27940
80.46 Regulation at 73 FR 74355 withdrawn in part.....6233
80.1129 (b)(1), (4) and (5)(ii) revised; (b)(8) added; eff. 8–24–09.....29952
80.1131 (a)(8) added; (b)(4) removed; eff. 8–24–09.....29952
80.1151 (b)(5) revised; eff. 8–24–09.....29952

2010

(Regulations published from January 1, 2010 through July 1, 2010)

40 CFR

75 FR Page

Chapter I

80.2 (ccc) and (nnn) revised; (ttt) and (uuu) added.....22968
80.27 (a)(2)(ii) table amended.....9111
80.500—80.620 (Subpart I) Heading revised.....22968

40 CFR—Continued

75 FR Page

Chapter I—Continued

80.501 (a)(5) and (6) revised; (a)(7) added 22968
80.502 (a), (b) introductory text, (1) introductory text, (c) and (d) introductory text revised; (g) and (h) added 22969
80.510 Heading, (f) introductory text and (g)(1) revised; (f)(6) and (k) added 22969
80.511 Heading, (a), (b)(4) and (9) revised; (b)(10) added 22969
80.513 (e) revised 22969
80.525 (b) and (d) revised 22969
80.551 (f) revised 22970
80.561 Heading revised 22970
80.570 (a) and (b) revised 22970
80.571 (b) and (d) revised 22970
80.572 (a) and (b) revised 22970
80.573 (a) revised 22970
80.574 Revised 22971
80.580 (b)(1) and (c)(1) added 22971
80.581 Heading, (a) and (c)(1) revised 22971
80.583 Heading revised 22971
80.584 Heading revised; (a)(3) and (b)(3) added 22971
80.585 Heading, (e)(2) and (4) revised 22972
80.590 Heading, (a) introductory text, (5), (6) introductory text and (ii) revised; (e) through (i) redesignated as (f) through (j); (a)(7)(vii) and new (e) added 22972
80.593 Introductory text revised 22972
80.597 (c) through (f) revised; (g) added 22972
80.598 (a)(2)(i)(A) through (F), (v) introductory text, (b)(4)(i), (ii), (7)(i), (ii), (8), (9)(ii), (viii) and (x) introductory text revised; (a)(2)(i)(H) and (3)(xv) added 22973
80.599 (a)(1) and (e)(4) revised; (a)(2) removed 22974
80.600 (a)(5), (12), (b)(1)(v)(A), (B), (3), (i), (o)(1) and (2) revised 22974
80.601 (b)(3)(x) revised 22975
80.602 Heading, (a) introductory text, (2) introductory text, (3), (b) introductory text, (4)(i), (ii), (g)(1) and (2) revised 22975
80.606 Heading, (a) introductory text, (1) and (b) revised; (c) added 22975

40 CFR—Continued

75 FR Page

Chapter I—Continued

80.607 Heading, (a), (c)(3)(iv), (4), (d)(2), (3), (4), (e)(1) and (f) revised 22976
80.608 Revised 22976
80.610 (a)(1), (b), (c), (e)(3)(iii), (4)(iii) and (g) revised; (e)(6) added 22976
80.612 (b) introductory text revised 22977
80.613 (a)(1)(iv) introductory text revised 22977
(e) added; eff. 7–12–10 26127
80.615 (b)(2) and (4) revised 22977
80.1339 (e)(4) revised; eff. 7–12–10 26131
80.1400—80.1468 (Subpart M) Added 14863
80.1401 Amended 26035
Regulation at 75 FR 26035 withdrawn in part 37733
80.1403 (a), (c)(2), (d) introductory text and (3) revised 26036
Regulation at 75 FR 26036 withdrawn in part 37733
80.1405 (c) revised 26036
80.1406 (c)(1) and (f) revised 26037
80.1415 (a), (b)(5), (6) and (c)(1) revised 26037
80.1416 Revised 26037
80.1425 Introductory text and (i) revised 26038
Regulation at 75 FR 26038 withdrawn 37733
80.1426 (a)(2), (c)(2), (3), (4), (6)(ii), (d)(1) introductory text, (2)(ii), (f)(1), (3)(iv), (v), (4), (5)(i), (iii)(B), (10), (11)(i) introductory text, (C), (ii) introductory text, (iii) introductory text, (A), (iv), (12) and Tables 1, 2 and 3 revised 26038
Regulation at 75 FR 26038 withdrawn in part 37733
80.1427 (a)(4)(i) and (7)(i) revised 26042
80.1428 (c) revised 26042
80.1429 (d) and (g) revised 26042
80.1430 (a), (b)(2) and (3) revised 26042
80.1440 (c)(3), (d) and (e) revised 26042
80.1442 (b)(1), (c) and (d)(1) revised; (b)(4) removed 26042
80.1450 (b), (c), (d)(2), (e) and (f) revised 26043

40 CFR—Continued

75 FR Page

Chapter I—Continued

80.1451 (a)(1)(xi), (b)(1)(ii)(H), (K), (N), (P), (Q), (R), (c)(1)(iii)(D), (2)(xv), (d) introductory text, (1) and (e) revised 26044

80.1452 (b) introductory text, (2), (4), (6), (9), (13), (15), (c) introductory text, (4), (5) and (7) revised 26045

Regulation at 75 FR 26045 withdrawn 37733

80.1453 (a)(5) removed; (a)(7), (8), (10) and (11) revised 26045

40 CFR—Continued

75 FR Page

Chapter I—Continued

80.1454 (d)(3) and (j)(2)(iii) redesignated as (d)(4) and (j)(2)(iv); (a)(2), (3)(iv), (c)(1)(i) introductory text, (A), (ii)(A), (2)(ii), (d) introductory text, new (4), (g), (h) introductory text, (6)(v), (j) introductory text and (k)(1) through (5) revised; (a)(6), new (d)(3) and (j)(2)(iii) added 26046

80.1455 (a) introductory text, (b)(1), (c) introductory text and (d)(1) revised 26047

80.1460 (c)(2) revised 26047

80.1463 (a) and (b) revised 26047

80.1464 (a)(1)(i)(A), (iv)(A), (b)(1)(i), (ii) and (c)(2)(ii) revised; (a)(1)(iv)(D) added; (a)(1)(vii) removed 26048

80.1465 (a)(6) and (d)(1)(ii) revised 26048