AUTHENTICATED
U.S. GOVERNMENT
INFORMATION
GPO

Code of Federal Regulations

40

Parts 87 to 99

Revised as of July 1, 2010

Protection of Environment

Containing a codification of documents of general applicability and future effect

As of July 1, 2010

With Ancillaries

Published by
Office of the Federal Register
National Archives and Records
Administration

A Special Edition of the Federal Register

U.S. GOVERNMENT OFFICIAL EDITION NOTICE

Legal Status and Use of Seals and Logos

The seal of the National Archives and Records Administration (NARA) authenticates the Code of Federal Regulations (CFR) as the official codification of Federal regulations established under the Federal Register Act. Under the provisions of 44 U.S.C. 1507, the contents of the CFR, a special edition of the Federal Register, shall be judicially noticed. The CFR is prima facie evidence of the original documents published in the Federal Register (44 U.S.C. 1510).

It is prohibited to use NARA's official seal and the stylized Code of Federal Regulations logo on any republication of this material without the express, written permission of the Archivist of the United States or the Archivist's designee. Any person using NARA's official seals and logos in a manner inconsistent with the provisions of 36 CFR part 1200 is subject to the penalties specified in 18 U.S.C. 506, 701, and 1017.

Use of ISBN Prefix

This is the Official U.S. Government edition of this publication and is herein identified to certify its authenticity. Use of the 0–16 ISBN prefix is for U.S. Government Printing Office Official Editions only. The Superintendent of Documents of the U.S. Government Printing Office requests that any reprinted edition clearly be labeled as a copy of the authentic work with a new ISBN.

U.S. GOVERNMENT PRINTING OFFICE

U.S. Superintendent of Documents • Washington, DC 20402–0001

http://bookstore.gpo.gov

Phone: toll-free (866) 512-1800; DC area (202) 512-1800

Table of Contents

	Page
Explanation	v
Title 40:	
Chapter I—Environmental Protection Agency (Continued)	3
Finding Aids:	
Table of CFR Titles and Chapters	1277
Alphabetical List of Agencies Appearing in the CFR	1297
List of CFR Sections Affected	1307

Cite this Code: CFR

To cite the regulations in this volume use title, part and section number. Thus, 40 CFR 87.1 *refers to title 40, part 87, section 1.*

Explanation

The Code of Federal Regulations is a codification of the general and permanent rules published in the Federal Register by the Executive departments and agencies of the Federal Government. The Code is divided into 50 titles which represent broad areas subject to Federal regulation. Each title is divided into chapters which usually bear the name of the issuing agency. Each chapter is further subdivided into parts covering specific regulatory areas.

Each volume of the Code is revised at least once each calendar year and issued on a quarterly basis approximately as follows:

Title 1 through Title 16.....as of January 1
Title 17 through Title 27.....as of April 1
Title 28 through Title 41.....as of July 1
Title 42 through Title 50.....as of October 1

The appropriate revision date is printed on the cover of each volume.

LEGAL STATUS

The contents of the Federal Register are required to be judicially noticed (44 U.S.C. 1507). The Code of Federal Regulations is prima facie evidence of the text of the original documents (44 U.S.C. 1510).

HOW TO USE THE CODE OF FEDERAL REGULATIONS

The Code of Federal Regulations is kept up to date by the individual issues of the Federal Register. These two publications must be used together to determine the latest version of any given rule.

To determine whether a Code volume has been amended since its revision date (in this case, July 1, 2010), consult the ''List of CFR Sections Affected (LSA),'' which is issued monthly, and the ''Cumulative List of Parts Affected,'' which appears in the Reader Aids section of the daily Federal Register. These two lists will identify the Federal Register page number of the latest amendment of any given rule.

EFFECTIVE AND EXPIRATION DATES

Each volume of the Code contains amendments published in the Federal Register since the last revision of that volume of the Code. Source citations for the regulations are referred to by volume number and page number of the Federal Register and date of publication. Publication dates and effective dates are usually not the same and care must be exercised by the user in determining the actual effective date. In instances where the effective date is beyond the cutoff date for the Code a note has been inserted to reflect the future effective date. In those instances where a regulation published in the Federal Register states a date certain for expiration, an appropriate note will be inserted following the text.

OMB CONTROL NUMBERS

The Paperwork Reduction Act of 1980 (Pub. L. 96–511) requires Federal agencies to display an OMB control number with their information collection request.

Many agencies have begun publishing numerous OMB control numbers as amendments to existing regulations in the CFR. These OMB numbers are placed as close as possible to the applicable recordkeeping or reporting requirements.

OBSOLETE PROVISIONS

Provisions that become obsolete before the revision date stated on the cover of each volume are not carried. Code users may find the text of provisions in effect on a given date in the past by using the appropriate numerical list of sections affected. For the period before January 1, 2001, consult either the List of CFR Sections Affected, 1949–1963, 1964–1972, 1973–1985, or 1986–2000, published in eleven separate volumes. For the period beginning January 1, 2001, a ''List of CFR Sections Affected'' is published at the end of each CFR volume.

''[RESERVED]'' TERMINOLOGY

The term ''[Reserved]'' is used as a place holder within the Code of Federal Regulations. An agency may add regulatory information at a ''[Reserved]'' location at any time. Occasionally ''[Reserved]'' is used editorially to indicate that a portion of the CFR was left vacant and not accidentally dropped due to a printing or computer error.

INCORPORATION BY REFERENCE

What is incorporation by reference? Incorporation by reference was established by statute and allows Federal agencies to meet the requirement to publish regulations in the Federal Register by referring to materials already published elsewhere. For an incorporation to be valid, the Director of the Federal Register must approve it. The legal effect of incorporation by reference is that the material is treated as if it were published in full in the Federal Register (5 U.S.C. 552(a)). This material, like any other properly issued regulation, has the force of law.

What is a proper incorporation by reference? The Director of the Federal Register will approve an incorporation by reference only when the requirements of 1 CFR part 51 are met. Some of the elements on which approval is based are:

(a) The incorporation will substantially reduce the volume of material published in the Federal Register.

(b) The matter incorporated is in fact available to the extent necessary to afford fairness and uniformity in the administrative process.

(c) The incorporating document is drafted and submitted for publication in accordance with 1 CFR part 51.

What if the material incorporated by reference cannot be found? If you have any problem locating or obtaining a copy of material listed as an approved incorporation by reference, please contact the agency that issued the regulation containing that incorporation. If, after contacting the agency, you find the material is not available, please notify the Director of the Federal Register, National Archives and Records Administration, 8601 Adelphi Road, College Park, MD 20740-6001, or call 202-741-6010.

CFR INDEXES AND TABULAR GUIDES

A subject index to the Code of Federal Regulations is contained in a separate volume, revised annually as of January 1, entitled CFR INDEX AND FINDING AIDS. This volume contains the Parallel Table of Authorities and Rules. A list of CFR titles, chapters, subchapters, and parts and an alphabetical list of agencies publishing in the CFR are also included in this volume.

An index to the text of ''Title 3—The President'' is carried within that volume.

The Federal Register Index is issued monthly in cumulative form. This index is based on a consolidation of the ''Contents'' entries in the daily Federal Register.

A List of CFR Sections Affected (LSA) is published monthly, keyed to the revision dates of the 50 CFR titles.

REPUBLICATION OF MATERIAL

There are no restrictions on the republication of material appearing in the Code of Federal Regulations.

INQUIRIES

For a legal interpretation or explanation of any regulation in this volume, contact the issuing agency. The issuing agency's name appears at the top of odd-numbered pages.

For inquiries concerning CFR reference assistance, call 202–741–6000 or write to the Director, Office of the Federal Register, National Archives and Records Administration, 8601 Adelphi Road, College Park, MD 20740-6001 or e-mail fedreg.info@nara.gov.

SALES

The Government Printing Office (GPO) processes all sales and distribution of the CFR. For payment by credit card, call toll-free, 866-512-1800, or DC area, 202-512-1800, M-F 8 a.m. to 4 p.m. e.s.t. or fax your order to 202-512-2250, 24 hours a day. For payment by check, write to: US Government Printing Office – New Orders, P.O. Box 979050, St. Louis, MO 63197-9000. For GPO Customer Service call 202-512-1803.

ELECTRONIC SERVICES

The full text of the Code of Federal Regulations, the LSA (List of CFR Sections Affected), The United States Government Manual, the Federal Register, Public Laws, Public Papers, Daily Compilation of Presidential Documents and the Privacy Act Compilation are available in electronic format via *Federalregister.gov*. For more information, contact Electronic Information Dissemination Services, U.S. Government Printing Office. Phone 202-512-1530, or 888-293-6498 (toll-free). E-mail, *gpoaccess@gpo.gov*.

The Office of the Federal Register also offers a free service on the National Archives and Records Administration's (NARA) World Wide Web site for public law numbers, Federal Register finding aids, and related information. Connect to NARA's web site at *www.archives.gov/federal-register*. The NARA site also contains links to GPO Access.

RAYMOND A. MOSLEY,
Director,
Office of the Federal Register.
July 1, 2010.

THIS TITLE

Title 40—PROTECTION OF ENVIRONMENT is composed of thirty-two volumes. The parts in these volumes are arranged in the following order: parts 1–49, parts 50–51, part 52 (52.01–52.1018), part 52 (52.1019–end of part 52), parts 53–59, part 60 (60.1–end of part 60, sections), part 60 (Appendices), parts 61–62, part 63 (63.1–63.599), part 63 (63.600–63.1199), part 63 (63.1200–63.1439), part 63 (63.1440–63.6175), part 63 (63.6580–63.8830), part 63 (63.8980–end of part 63) parts 64–71, parts 72–80, parts 81–84, part 85–§ 86.599–99, part 86 (86.600–1–end of part 86), parts 87–99, parts 100–135, parts 136–149, parts 150–189, parts 190–259, parts 260–265, parts 266–299, parts 300–399, parts 400–424, parts 425–699, parts 700–789, parts 790–999, and part 1000 to end. The contents of these volumes represent all current regulations codified under this title of the CFR as of July 1, 2010.

Chapter I—Environmental Protection Agency appears in all thirty-two volumes. Regulations issued by the Council on Environmental Quality, including an Index to Parts 1500 through 1508, appear in the volume containing part 1000 to end. The OMB control numbers for title 40 appear in § 9.1 of this chapter.

For this volume, Susannah C. Hurley was Chief Editor. The Code of Federal Regulations publication program is under the direction of Michael L. White, assisted by Ann Worley.

Title 40—Protection of Environment

(This book contains parts 87 to 99)

Part

CHAPTER I—Environmental Protection Agency (Continued) 87

CHAPTER I—ENVIRONMENTAL PROTECTION AGENCY (CONTINUED)

EDITORIAL NOTE: Nomenclature changes to chapter I appear at 65 FR 47324, 47325, Aug. 2, 2000; 66 FR 34375, 34376, June 28, 2001; and 69 FR 18803, Apr. 9, 2004.

SUBCHAPTER C—AIR PROGRAMS (CONTINUED)

Part		*Page*
87	Control of air pollution from aircraft and aircraft engines	5
88	Clean-fuel vehicles	12
89	Control of emissions from new and in-use nonroad compression-ignition engines	39
90	Control of emissions from nonroad spark-ignition engines at or below 19 kilowatts	171
91	Control of emissions from marine spark-ignition engines	301
92	Control of air pollution from locomotives and locomotive engines	409
93	Determining conformity of Federal actions to State or Federal implementation plans	554
94	Control of air pollution from marine compression-ignition engines	615
95	Mandatory patent licenses	700
96	NO_X Budget Trading Program and Cair NO_X and SO_2 Trading Programs for State implementation plans	703
97	Federal NO_X Budget Trading Program and CAIR NO_X and SO_2 Trading Programs	868
98	Mandatory greenhouse gas reporting	1056
99	[Reserved]	

SUBCHAPTER C—AIR PROGRAMS (CONTINUED)

PART 87—CONTROL OF AIR POLLUTION FROM AIRCRAFT AND AIRCRAFT ENGINES

Subpart A—General Provisions

Sec.
87.1 Definitions.
87.2 Acronyms and abbreviations.
87.3 General requirements.
87.4 [Reserved]
87.5 Special test procedures.
87.6 Aircraft safety.
87.7 Exemptions.
87.8 Incorporation by reference.

Subpart B—Engine Fuel Venting Emissions (New and In-Use Aircraft Gas Turbine Engines)

87.10 Applicability.
87.11 Standard for fuel venting emissions.

Subpart C—Exhaust Emissions (New Aircraft Gas Turbine Engines)

87.20 Applicability.
87.21 Standards for exhaust emissions.

Subpart D—Exhaust Emissions (In-Use Aircraft Gas Turbine Engines)

87.30 Applicability.
87.31 Standards for exhaust emissions.

Subparts E–F [Reserved]

Subpart G—Test Procedures for Engine Exhaust Gaseous Emissions (Aircraft and Aircraft Gas Turbine Engines)

87.60 Introduction.
87.61 Turbine fuel specifications.
87.62 Test procedure (propulsion engines).
87.63 [Reserved]
87.64 Sampling and analytical procedures for measuring gaseous exhaust emissions.
87.65–87.70 [Reserved]
87.71 Compliance with gaseous emission standards.

Subpart H—Test Procedures for Engine Smoke Emissions (Aircraft Gas Turbine Engines)

87.80 Introduction.
87.81 Fuel specifications.
87.82 Sampling and analytical procedures for measuring smoke exhaust emissions.
87.83–87.88 [Reserved]
87.89 Compliance with smoke emission standards.

AUTHORITY: 42 U.S.C. 7401–7671q.

SOURCE: 47 FR 58470, Dec. 30, 1982, unless otherwise noted.

Subpart A—General Provisions

§ 87.1 Definitions.

(a) As used in this part, all terms not defined herein shall have the meaning given them in the Act:

Act means the Clean Air Act, as amended (42 U.S.C. 7401 *et seq.*).

Administrator means the Administrator of the Environmental Protection Agency and any other officer or employee of the Environmental Protection Agency to whom authority involved may be delegated.

Aircraft means any airplane for which a U.S. standard airworthiness certificate or equivalent foreign airworthiness certificate is issued.

Aircraft engine means a propulsion engine which is installed in or which is manufactured for installation in an aircraft.

Aircraft gas turbine engine means a turboprop, turbofan, or turbojet aircraft engine.

Class TP means all aircraft turboprop engines.

Class TF means all turbofan or turbojet aircraft engines or aircraft engines designed for applications that otherwise would have been fulfilled by turbojet and turbofan engines except engines of class T3, T8, and TSS.

Class T3 means all aircraft gas turbine engines of the JT3D model family.

Class T8 means all aircraft gas turbine engines of the JT8D model family.

Class TSS means all aircraft gas turbine engines employed for propulsion of aircraft designed to operate at supersonic flight speeds.

Commercial aircraft engine means any aircraft engine used or intended for use by an ''air carrier,'' (including those engaged in ''intrastate air transportation'') or a ''commercial operator'' (including those engaged in ''intrastate air transportation'') as these terms are

defined in the Federal Aviation Act and the Federal Aviation Regulations.

Commercial aircraft gas turbine engine means a turboprop, turbofan, or turbojet commercial aircraft engine.

Emission measurement system means all of the equipment necessary to transport and measure the level of emissions. This includes the sample system and the instrumentation system.

Engine Model means all commercial aircraft turbine engines which are of the same general series, displacement, and design characteristics and are usually approved under the same type certificate.

Exhaust emissions means substances emitted to the atmosphere from the exhaust discharge nozzle of an aircraft or aircraft engine.

Fuel venting emissions means raw fuel, exclusive of hydrocarbons in the exhaust emissions, discharged from aircraft gas turbine engines during all normal ground and flight operations.

In-use aircraft gas turbine engine means an aircraft gas turbine engine which is in service.

New aircraft turbine engine means an aircraft gas turbine engine which has never been in service.

Power setting means the power or thrust output of an engine in terms of kilonewtons thrust for turbojet and turbofan engines and shaft power in terms of kilowatts for turboprop engines.

Rated output (rO) means the maximum power/thrust available for takeoff at standard day conditions as approved for the engine by the Federal Aviation Administration, including reheat contribution where applicable, but excluding any contribution due to water injection.

Rated pressure ratio (rPR) means the ratio between the combustor inlet pressure and the engine inlet pressure achieved by an engine operating at rated output.

Sample system means the system which provides for the transportation of the gaseous emission sample from the sample probe to the inlet of the instrumentation system.

Secretary means the Secretary of Transportation and any other officer or employee of the Department of Transportation to whom the authority involved may be delegated.

Shaft power means only the measured shaft power output of a turboprop engine.

Smoke means the matter in exhaust emissions which obscures the transmission of light.

Smoke number (SN) means the dimensionless term quantifying smoke emissions.

Standard day conditions means standard ambient conditions as described in the United States Standard Atmosphere, 1976, (i.e., Temperature =15 °C, specific humidity =0.00 kg/ H_2 O/kg dry air, and pressure =101325 Pa.)

Taxi/idle (in) means those aircraft operations involving taxi and idle between the time of landing roll-out and final shutdown of all propulsion engines.

Taxi/idle (out) means those aircraft operations involving taxi and idle between the time of initial starting of the propulsion engine(s) used for the taxi and turn on to duty runway.

[47 FR 58470, Dec. 30, 1982, as amended at 49 FR 31875, Aug. 9, 1984; 62 FR 25365, May 8, 1997]

§ 87.2 Acronyms and abbreviations.

The abbreviations used in this part have the following meanings in both upper and lower case:

CO Carbon Monoxide
CO_2 Carbon dioxide.
FAA Federal Aviation Administration, Department of Transportation
HC Hydrocarbon(s)
hr. Hour(s)
LTO Landing takeoff
min. Minute(s)
NO_X Oxides of nitrogen
rO Rated output
rPR Rated pressure ratio
sec. Seconds
SP Shaft power
SN Smoke number
T Temperature, degrees Kelvin
TIM Time in mode
W Watt(s)
° Degree
% Percent

[47 FR 58470, Dec. 30, 1982, as amended at 49 FR 31875, Aug. 9, 1984; 62 FR 25365, May 8, 1997; 74 FR 56374, Oct. 30, 2009]

§ 87.3 General requirements.

(a) This part provides for the approval or acceptance by the Administrator or the Secretary of testing and sampling methods, analytical, techniques, and related equipment not identical to those specified in this part. Before either approves or accepts any such alternate, equivalent, or otherwise nonidentical procedures or equipment, the Administrator or the Secretary shall consult with the other in determining whether or not the action requires rulemaking under sections 231 and 232 of the Clean Air Act, as amended, consistent with the Administrator's and the Secretary's responsibilities under sections 231 and 232 of the Act. (42 U.S.C. 7571, 7572).

(b) Under section 232 of the Act, the Secretary issues regulations to insure compliance with this part.

(c) With respect to aircraft of foreign registry, these regulations shall apply in a manner consistent with any obligation assumed by the United States in any treaty, convention or agreement between the United States and any foreign country or foreign countries.

§ 87.4 [Reserved]

§ 87.5 Special test procedures.

The Administrator or the Secretary may, upon written application by a manufacturer or operator of aircraft or aircraft engines, approve test procedures for any aircraft or aircraft engine that is not susceptible to satisfactory testing by the procedures set forth herein. Prior to taking action on any such application, the Administrator or the Secretary shall consult with the other.

§ 87.6 Aircraft safety.

The provisions of this part will be revised if at any time the Secretary determines that an emission standard cannot be met within the specified time without creating a safety hazard.

§ 87.7 Exemptions.

(a) *Exemptions based on flights for short durations at infrequent intervals.* The emission standards of this part do not apply to engines which power aircraft operated in the United States for short durations at infrequent intervals. Such operations are limited to:

(1) Flights of an aircraft for the purpose of export to a foreign country, including any flights essential to demonstrate the integrity of an aircraft prior to its flight to a point outside the United States.

(2) Flights to a base where repairs, alterations or maintenance are to be performed, or to a point of storage, and flights for the purpose of returning an aircraft to service.

(3) Official visits by representatives of foreign governments.

(4) Other flights the Secretary determines, after consultation with the Administrator, to be for short durations at infrequent intervals. A request for such a determination shall be made before the flight takes place.

(b) *Exemptions for very low production models.* The emissions standards of this part do not apply to engines of very low total production after the date of applicability. For the purpose of this part, ''very low production'' is limited to a maximum total production for United States civil aviation applications of no more than 200 units covered by the same type certificate after January 1, 1984.

(c) *Exemptions for New Engines in Other Categories.* The emissions standards of this part do not apply to engines for which the Secretary determines, with the concurrence of the Administrator, that application of any standard under § 87.21 is not justified, based upon consideration of:

(1) Adverse economic impact on the manufacturer.

(2) Adverse economic impact on the aircraft and airline industries at large.

(3) Equity in administering the standards among all economically competing parties.

(4) Public health and welfare effects.

(5) Other factors which the Secretary, after consultation with the Administrator, may deem relevant to the case in question.

(d) *Time Limited Exemptions for In Use Engines.* The emissions standards of this part do not apply to aircraft or aircraft engines for time periods which the Secretary determines, with the concurrence of the Administrator, that any applicable standard under § 87.11(a),

§ 87.31(a), or § 87.31(c), should not be applied based upon consideration of the following:

(1) Documentation demonstrating that all good faith efforts to achieve compliance with such standard have been made.

(2) Documentation demonstrating that the inability to comply with such standard is due to circumstances beyond the control of the owner or operator of the aircraft.

(3) A plan in which the owner or operator of the aircraft shows that he will achieve compliance in the shortest time which is feasible.

(4) Applications for a determination that any requirements of § 87.11(a), § 87.31(a) or § 87.31(c) do not apply shall be submitted in duplicate to the Secretary in accordance with procedures established by the Secretary.

(e) The Secretary shall publish in the FEDERAL REGISTER the name of the organization to whom exemptions are granted and the period of such exemptions.

(f) No state or political subdivision thereof may attempt to enforce a standard respecting emissions from an aircraft or engine if such aircraft or engine has been exempted from such standard under this part.

[47 FR 58470, Dec. 30, 1982, as amended at 49 FR 31875, Aug. 9, 1984; 49 FR 41002, Oct. 18, 1984; 70 FR 69686, Nov. 17, 2005]

§ 87.8 Incorporation by reference.

We have incorporated by reference the documents listed in this section. The Director of the Federal Register approved the incorporation by reference as prescribed in 5 U.S.C. 552(a) and 1 CFR part 51. Anyone may inspect copies at the U.S. EPA, Air and Radiation Docket and Information Center, 1301 Constitution Ave., NW., Room B102, EPA West Building, Washington, DC 20460 or at the National Archives and Records Administration (NARA). For information on the availability of this material at NARA, call 202–741–6030, or go to: *http://www.archives.gov/federal_register/code_of_federal_regulations/ibr_locations.html*.

(a) *ICAO material*. Table 1 of § 87.8 lists material from the International Civil Aviation Organization that we have incorporated by reference. The first column lists the number and name of the material. The second column lists the sections of this part where we reference it. Anyone may purchase copies of these materials from the International Civil Aviation Organization, Document Sales Unit, 999 University Street, Montreal, Quebec, Canada H3C 5H7. Table 1 follows:

TABLE 1 OF § 87.8—ICAO MATERIALS

Document number and name	Part 87 reference
International Civil Aviation Organization Annex 16, Environmental Protection, Volume II, Aircraft Engine Emissions, Second Edition, July 1993, Including Amendment 3 of March 20, 1997 (as indicated in footnoted pages.).	87.8, 87.64, 87.71, 87.82, 87.89.

(b) [Reserved]

[70 FR 69686, Nov. 17, 2005]

Subpart B—Engine Fuel Venting Emissions (New and In-Use Aircraft Gas Turbine Engines)

§ 87.10 Applicability.

(a) The provisions of this subpart are applicable to all new aircraft gas turbines of classes T3, T8, TSS and TF equal to or greater than 36 kilonewton rated output, manufactured on or after January 1, 1974, and to all in-use aircraft gas turbine engines of classes T3, T8, TSS and TF equal to or greater than 36 kilonewton rated output manufactured after February 1, 1974.

(b) The provisions of this subpart are also applicable to all new aircraft gas turbines of class TF less than 36 kilonewton rated output and class TP manufactured on or after January 1, 1975 and to all in-use aircraft gas turbines of class TF less than 36 kilonewton rated output and class TP manufactured after January 1, 1975.

[49 FR 41002, Oct. 18, 1984]

§ 87.11 Standard for fuel venting emissions.

(a) No fuel venting emissions shall be discharged into the atmosphere from any new or in-use aircraft gas turbine engine subject to the subpart. This paragraph is directed at the elimination of intentional discharge to the atmosphere of fuel drained from fuel

nozzle manifolds after engines are shut down and does not apply to normal fuel seepage from shaft seals, joints, and fittings.

(b) Conformity with the standard set forth in paragraph (a) of this section shall be determined by inspection of the method designed to eliminate these emissions.

Subpart C—Exhaust Emissions (New Aircraft Gas Turbine Engines)

§ 87.20 Applicability.

The provisions of this subpart are applicable to all aircraft gas turbine engines of the classes specified beginning on the dates specified.

§ 87.21 Standards for exhaust emissions.

(a) Exhaust emissions of smoke from each new aircraft gas turbine engine of class T8 manufactured on or after February 1, 1974, shall not exceed: Smoke number of 30.

(b) Exhaust emissions of smoke from each new aircraft gas turbine engine of class TF and of rated output of 129 kilonewtons thrust or greater, manufactured on or after January 1, 1976, shall not exceed:

$SN=83.6(r0)^{-0.274}$ (r0 is in kilonewtons).

(c) Exhaust emission of smoke from each new aircraft gas turbine engine of class T3 manufactured on or after January 1, 1978, shall not exceed: Smoke number of 25.

(d) Gaseous exhaust emissions from each new commercial aircraft gas turbine engine shall not exceed:

(1) Classes TF, T3, T8 engines greater than 26.7 kilonewtons rated output:

(i) Engines manufactured on or after January 1, 1984:

Hydrocarbons: 19.6 grams/kilonewton rO.

(ii) Engines manufactured on or after July 7, 1997.

Carbon Monoxide: 118 grams/kilonewton rO.

(iii) Engines of a type or model of which the date of manufacture of the first individual production model was on or before December 31, 1995 and for which the date of manufacture of the individual engine was on or before December 31, 1999.

Oxides of Nitrogen: (40 + 2(rPR)) grams/kilonewtons rO.

(iv) Engines of a type or model of which the date of manufacture of the first individual production model was after December 31, 1995 or for which the date of manufacture of the individual engine was after December 31, 1999:

Oxides of Nitrogen: (32 + 1.6(rPR)) grams/kilonewtons rO.

(v) The emission standards prescribed in paragraphs (d)(1) (iii) and (iv) of this section apply as prescribed beginning July 7, 1997.

(vi) Engines of a type or model of which the date of manufacture of the first individual production model was after December 31, 2003:

(A) Engines with a rated pressure ratio of 30 or less:

(*1*) Engines with a maximum rated output greater than 89 kilonewtons:

Oxides of Nitrogen: (19 + 1.6(rPR)) grams/kilonewtons rO.

(*2*) Engines with a maximum rated output greater than 26.7 kilonewtons but not greater than 89 kilonewtons:

Oxides of Nitrogen: (37.572 + 1.6(rPR) − 0.2087(rO)) grams/kilonewtons rO.

(B) Engines with a rated pressure ratio greater than 30 but less than 62.5:

(*1*) Engines with a maximum rated output greater than 89 kilonewtons:

Oxides of Nitrogen: (7 + 2(rPR)) grams/kilonewtons rO.

(*2*) Engines with a maximum rated output greater than 26.7 kilonewtons but not greater than 89 kilonewtons:

Oxides of Nitrogen: (42.71 + 1.4286(rPR) − 0.4013(rO) + 0.00642(rPR × rO)) grams/kilonewtons rO.

(C) Engines with a rated pressure ratio of 62.5 or more:

Oxides of Nitrogen: (32 + 1.6(rPR)) grams/kilonewtons rO.

(vii) The emission standards prescribed in paragraph (d)(1)(vi) of this section shall apply as prescribed beginning December 19, 2005.

(2) Class TSS: Engines manufactured on or after January 1, 1984:

$Hydrocarbons=140(0.92)^{rPR}$ grams/kilonewtons rO.

(e) Smoke exhaust emissions from each gas turbine engine of the classes specified below shall not exceed:

(1) Class TF of rated output less than 26.7 kilonewtons manufactured on or after (one year from date of publication):

$SN=83.6(ro)^{-0.274}$ (ro is in kilonewtons) not to exceed a maximum of SN=50.

(2) Classes T3, T8, TSS and TF of rated output equal to or greater than 26.7 kilonewtons manufactured on or after January 1, 1984:

$SN=83.6(ro)^{-0.274}$ (ro is in kilonewtons) not to exceed a maximum of SN=50.

(3) Class TP of rated output equal to or greater than 1,000 kilowatts manufactured on or after January 1, 1984:

$SN=187(ro)^{-0.168}$ (ro is in kilowatts)

(f) The standards set forth in paragraphs (a), (b), (c), (d), and (e) of this section refer to a composite gaseous emission sample representing the operating cycles set forth in the applicable sections of subpart G of this part, and exhaust smoke emissions emitted during operations of the engine as specified in the applicable sections of subpart H of this part, measured and calculated in accordance with the procedures set forth in those subparts.

[47 FR 58470, Dec. 30, 1982, as amended at 49 FR 31875, Aug. 9, 1984; 62 FR 25365, May 8, 1997; 70 FR 69686, Nov. 17, 2005]

Subpart D—Exhaust Emissions (In-Use Aircraft Gas Turbine Engines)

§ 87.30 Applicability.

The provisions of this subpart are applicable to all in-use aircraft gas turbine engines certified for operation within the United States of the classes specified beginning on the dates specified.

§ 87.31 Standards for exhaust emissions.

(a) Exhaust emissions of smoke from each in-use aircraft gas turbine engine of Class T8, beginning February 1, 1974, shall not exceed: Smoke number of 30.

(b) Exhaust emissions of smoke from each in-use aircraft gas turbine engine of class TF and of rated output of 129 kilonewtons thrust or greater, beginning January 1, 1976, shall not exceed:

$SN=83.6(r0)^{-0.274}$(r0 is in kilonewtons).

(c) The standards set forth in paragraphs (a) and (b) of this section refer to exhaust smoke emissions emitted during operations of the engine as specified in the applicable section of subpart H of this part, and measured and calculated in accordance with the procedures set forth in this subpart.

[47 FR 58470, Dec. 30, 1982, as amended at 48 FR 2718, Jan. 20, 1983]

Subparts E–F [Reserved]

Subpart G—Test Procedures for Engine Exhaust Gaseous Emissions (Aircraft and Aircraft Gas Turbine Engines)

§ 87.60 Introduction.

(a) Except as provided under § 87.5, the procedures described in this subpart shall be the test program to determine the conformity of new aircraft gas turbine engines with the applicable standards set forth in this part.

(b) The test consists of operating the engine at prescribed power settings on an engine dynamometer (for engines producing primarily shaft power) or thrust measuring test stand (for engines producing primarily thrust). The exhaust gases generated during engine operation are sampled continuously for specific component analysis through the analytical train.

(c) The exhaust emission test is designed to measure hydrocarbons, carbon monoxide, carbon dioxide, and oxides of nitrogen concentrations, and to determine mass emissions through calculations during a simulated aircraft landing-takeoff cycle (LTO). The LTO cycle is based on time in mode data during high activity periods at major airports. The test for propulsion engines consists of at least the following four modes of engine operation: taxi/idle, takeoff, climbout, and approach. The mass emission for the modes are combined to yield the reported values.

(d) When an engine is tested for exhaust emissions on an engine dynamometer or test stand, the complete

engine shall be used with all accessories which might reasonably be expected to influence emissions to the atmosphere installed and functioning, if not otherwise prohibited by § 87.62(a)(2). Use of service air bleed and shaft power extraction to power auxiliary gearbox-mounted components required to drive aircraft systems is not permitted.

(e) Other gaseous emissions measurement systems may be used if shown to yield equivalent results and if approved in advance by the Administrator or the Secretary.

[47 FR 58470, Dec. 30, 1982, as amended at 49 FR 31875, Aug. 9, 1984; 62 FR 25366, May 8, 1997]

§ 87.61 Turbine fuel specifications.

For exhaust emission testing, fuel meeting the specifications listed in this section shall be used. Additives used for the purpose of smoke suppression (such as organometallic compounds) shall not be present.

Property and Allowable Range of Values

Density kg/m^3 at 15 °C: 780–820.
Distillation temperature, °C: 10% boiling point, 155–201; final boiling point, 235–285.
Net heat of combustion, MJ/kg: 42.86–43.50.
Aromatics, volume %: 15–23.
Naphthalenes, volume %: 1.0–3.5.
Smoke point, mm: 20–28.
Hydrogen, mass %: 13.4–14.1.
Sulfur, mass %: less than 0.3%.
Kinematic viscosity at −20 °C, mm^2/s: 2.5–6.5.

[62 FR 25366, May 8, 1997]

§ 87.62 Test procedure (propulsion engines).

(a)(1) The engine shall be tested in each of the following engine operating modes which simulate aircraft operation to determine its mass emission rates. The actual power setting, when corrected to standard day conditions, should correspond to the following percentages of rated output. Analytical correction for variations from reference day conditions and minor variations in actual power setting should be specified and/or approved by the Secretary:

Mode	Class		
	TP	TF, T3, T8	TSS
Taxi/idle	(1)	(1)	(1)
Takeoff	100	100	100
Climbout	90	85	65
Descent	NA	NA	15
Approach	30	30	34

[1] See paragraph (a)(2) of this section.

(2) The taxi/idle operating modes shall be carried out at a power setting of 7% rated thrust unless the Secretary determines that the unique characteristics of an engine model undergoing certification testing at 7% would result in substantially different HC and CO emissions than if the engine model were tested at the manufacturers recommended idle power setting. In such cases the Secretary shall specify an alternative test condition.

(3) The times in mode (TIM) shall be as specified below:

Mode	Class		
	TP	TF, T3 or T8	TSS
Taxi/idle (minutes)	26.0	26.0	26.0
Takeoff	0.5	0.7	1.2
Climbout	2.5	2.2	2.0
Descent	N/A	N/A	1.2
Approach	4.5	4.0	2.3

(b) Emissions testing shall be conducted on warmed-up engines which have achieved a steady operating temperature.

[47 FR 58470, Dec. 30, 1982, as amended at 62 FR 25366, May 8, 1997]

§ 87.63 [Reserved]

§ 87.64 Sampling and analytical procedures for measuring gaseous exhaust emissions.

(a) The system and procedures for sampling and measurement of gaseous emissions shall be as specified by Appendices 3 and 5 to ICAO Annex 16 (incorporated by reference in § 87.8).

(b) Starting January 1, 2011, report CO_2 values along with your emission levels of regulated NO_X to the Administrator for engines of a type or model of which the date of manufacture of the first individual production model was on or after January 1, 2011. By January 1, 2011, report CO_2 values along with your emission levels of regulated NO_X to the Administrator for engines currently in production and of a type or

model for which the date of manufacture of the individual engine was before January 1, 2011. Round CO_2 to the nearest 1 g/kilonewton rO.

(c) Report CO_2 by calculation from fuel mass flow rate measurements in Appendices 3 and 5 to ICAO Annex 16, volume II or alternatively, according to the measurement criteria of CO_2 in Appendices 3 and 5 to ICAO Annex 16, volume II.

[74 FR 56374, Oct. 30, 2009]

§§ 87.65–87.70 [Reserved]

§ 87.71 Compliance with gaseous emission standards.

Compliance with each gaseous emission standard by an aircraft engine shall be determined by comparing the pollutant level in grams/kilonewton/thrust/cycle or grams/kilowatt/cycle as calculated in § 87.64 with the applicable emission standard under this part. An acceptable alternative to testing every engine is described in Appendix 6 to ICAO Annex 16 (incorporated by reference in § 87.8). Other methods of demonstrating compliance may be approved by the Secretary with the concurrence of the Administrator.

[70 FR 69686, Nov. 17, 2005]

Subpart H—Test Procedures for Engine Smoke Emissions (Aircraft Gas Turbine Engines)

§ 87.80 Introduction.

Except as provided under § 87.5, the procedures described in this subpart shall be the test program to determine the conformity of new and in-use gas turbine engines with the applicable standards set forth in this part. The test is essentially the same as that described in §§ 87.60 through 87.62, except that the test is designed to determine the smoke emission level at various operating points representative of engine usage in aircraft. Other smoke measurement systems may be used if shown to yield equivalent results and if approved in advance by the Administrator or the Secretary.

§ 87.81 Fuel specifications.

Fuel having specifications as provided in § 87.61 shall be used in smoke emission testing.

§ 87.82 Sampling and analytical procedures for measuring smoke exhaust emissions.

The system and procedures for sampling and measurement of smoke emissions shall be as specified by Appendix 2 to ICAO Annex 16 (incorporated by reference in § 87.8).

[70 FR 69687, Nov. 17, 2005]

§§ 87.83–87.88 [Reserved]

§ 87.89 Compliance with smoke emission standards.

Compliance with each smoke emission standard shall be determined by comparing the plot of SN as a function of power setting with the applicable emission standard under this part. The SN at every power setting must be such that there is a high degree of confidence that the standard will not be exceeded by any engine of the model being tested. An acceptable alternative to testing every engine is described in Appendix 6 to ICAO Annex 16 (incorporated by reference in § 87.8).

[70 FR 69687, Nov. 17, 2005]

PART 88—CLEAN-FUEL VEHICLES

Subpart A—Emission Standards for Clean-Fuel Vehicles

Sec.
88.101–94 General applicability.
88.102–94 Definitions.
88.103–94 Abbreviations.
88.104–94 Clean-fuel vehicle tailpipe emission standards for light-duty vehicles and light-duty trucks.
88.105–94 Clean-fuel fleet emission standards for heavy-duty engines.

Subpart B—California Pilot Test Program

88.201–94 Scope.
88.202–94 Definitions.
88.203–94 Abbreviations.
88.204–94 Sales requirements for the California Pilot Test Program.
88.205–94 California Pilot Test Program Credits Program.
88.206–94 State opt-in for the California Pilot Test Program.
TABLES TO SUBPART B OF PART 88

Subpart C—Clean-Fuel Fleet Program

88.301–93 General applicability.
88.302–93 Definitions.
88.302–94 Definitions.
88.303–93 Abbreviations.
88.304–94 Clean-fuel Fleet Vehicle Credit Program.
88.305–94 Clean-fuel fleet vehicle labeling requirements for heavy-duty vehicles.
88.306–94 Requirements for a converted vehicle to qualify as a clean-fuel fleet vehicle.
88.307–94 Exemption from temporal transporation control measures for CFFVs.
88.308–94 Programmatic requirements for clean-fuel fleet vehicles.
88.309 [Reserved]
88.310–94 Applicability to covered Federal fleets.
88.311–93 Emissions standards for Inherently Low-Emission Vehicles.
88.311–98 Emissions standards for Inherently Low-Emission Vehicles.
88.312–93 Inherently Low-Emission Vehicle labeling.
88.313–93 Incentives for the purchase of Inherently Low-Emission Vehicles.
TABLES TO SUBPART C OF PART 88

AUTHORITY: 42 U.S.C. 7410, 7418, 7581, 7582, 7583, 7584, 7586, 7588, 7589, 7601(a).

SOURCE: 57 FR 60046, Dec. 17, 1992, unless otherwise noted.

Subpart A—Emission Standards for Clean-Fuel Vehicles

§ 88.101–94 General applicability.

The clean-fuel vehicle standards and provisions of this subpart are applicable to vehicles used in subpart B of this part (the Clean Fuel Fleet Program) and subpart C of this part (the California Pilot Test Program).

[59 FR 50074, Sept. 30, 1994]

§ 88.102–94 Definitions.

Any terms defined in 40 CFR part 86 and not defined in this part shall have the meaning given them in 40 CFR part 86, subpart A.

Adjusted Loaded Vehicle Weight is defined as the numerical average of the vehicle curb weight and the GVWR.

Dual Fuel Vehicle (or Engine) means any motor vehicle (or motor vehicle engine) engineered and designed to be operated on two different fuels, but not on a mixture of the fuels.

Flexible Fuel Vehicle (or Engine) means any motor vehicle (or motor vehicle engine) engineered and designed to be operated on any mixture of two or more different fuels.

Heavy Light-Duty Truck means any light-duty truck rated greater than 6000 lbs. GVWR.

Light Light-Duty Truck means any light-duty truck rated through 6000 lbs GVWR.

Loaded Vehicle Weight is defined as the curb weight plus 300 lbs.

Low-Emission Vehicle means any light-duty vehicle or light-duty truck conforming to the applicable Low-Emission Vehicle standard, or any heavy-duty vehicle with an engine conforming to the applicable Low-Emission Vehicle standard.

Non-methane Hydrocarbon Equivalent means the sum of the carbon mass emissions of non-oxygenated non-methane hydrocarbons plus the carbon mass emissions of alcohols, aldehydes, or other organic compounds which are separately measured in accordance with the applicable test procedures of 40 CFR part 86, expressed as gasoline-fueled vehicle non-methane hydrocarbons. In the case of exhaust emissions, the hydrogen-to-carbon ratio of the equivalent hydrocarbon is 1.85:1. In the case of diurnal and hot soak emissions, the hydrogen-to-carbon ratios of the equivalent hydrocarbons are 2.33:1 and 2.2:1 respectively.

Non-methane Organic Gas is defined as in section 241(3) Clean Air Act as amended (42 U.S.C. 7581(3)).

Test Weight is defined as the average of the curb weight and the GVWR.

Transitional Low-Emission Vehicle means any light-duty vehicle or light-duty truck conforming to the applicable Transitional Low-Emission Vehicle standard.

Ultra Low-Emission Vehicle means any light-duty vehicle or light-duty truck conforming to the applicable Ultra Low-Emission Vehicle standard, or any heavy-duty vehicle with an engine conforming to the applicable Ultra Low-Emission Vehicle standard.

Zero-Emission Vehicle means any light-duty vehicle or light-dutytruck conforming to the applicable Zero-Emission Vehicle standard, or any heavy-duty vehicle conforming to the

applicable Zero-Emission Vehicle standard.

[57 FR 60046, Dec. 17, 1992. Redesignated and amended at 59 FR 50074, Sept. 30, 1994]

§ 88.103–94 Abbreviations.

The abbreviations of part 86 also apply to this subpart. The abbreviations in this section apply to all of part 88.

ALVW—Adjusted Loaded Vehicle Weight
CO—Carbon Monoxide
HCHO—Formaldehyde
HC—Hydrocarbon
HDV—Heavy-Duty Vehicle
LDT—Light-Duty Truck
LDV—Light-Duty Vehicle
NMHC—Non-Methane Hydrocarbon
NMHCE—Non-Methane Hydrocarbon Equivalent
NMOG—Non-Methane Organic Gas
NOx—Nitrogen Oxides
PM—Particulate Matter
GVWR—Gross Vehicle Weight Rating
LVW—Loaded Vehicle Weight
TW—Test Weight
TLEV—Transitional Low-Emission Vehicle
LEV—Low-Emission Vehicle
ULEV—Ultra Low-Emission Vehicle
ZEV—Zero-Emission Vehicle

[57 FR 60046, Dec. 17, 1992. Redesignated and amended at 59 FR 50074, Sept. 30, 1994]

§ 88.104–94 Clean-fuel vehicle tailpipe emission standards for light-duty vehicles and light-duty trucks.

(a) A light-duty vehicle or light-duty truck will be considered as a TLEV, LEV, ULEV, or ZEV if it meets the applicable requirements of this section.

(b) Light-duty vehicles certified to the exhaust emission standards for TLEVs, LEVs, and ULEVs in Tables A104–1 and A104–2 shall be considered as meeting the requirements of this section for that particular vehicle emission category for model years 1994–2000 for the California Pilot Program.

(c) Light-duty vehicles certified to the exhaust emission standards for LEVs and ULEVs in Tables A104–1 and A104–2 shall be considered as meeting the requirements of this section for that particular vehicle emission category for model years 2001 and later for the California Pilot Program, and for model years 1998 and later for the Clean Fuel Fleet Program.

(d) Light light-duty trucks certified to the exhaust emission standards for a specific weight category for TLEVs, LEVs, and ULEVs in Tables A104–3 and A104–4 shall be considered as meeting the requirements of this section for that particular vehicle emission category. For model years 1994–2000 for the California Pilot Program.

(e) Light Light-duty trucks certified to the exhaust emission standards for a specific weight category for LEVs and ULEVs in Tables A104–3 and A104–4 shall be considered as meeting the requirements of this section for that particular vehicle emission category. For model years 2001 and later for the California Pilot Program, and for model years 1998 and later for the Clean Fuel Fleet Program.

(f) Heavy light-duty trucks certified to the exhaust emission standards for a specific weight category of LEVs and ULEVs in Tables A104–5 and A104–6 for model years 1998 and later shall be considered as meeting the requirements of this section for that particular vehicle emission category.

(g) A light-duty vehicle or light-duty truck shall be certified as a ZEV if it is determined by engineering analysis that the vehicle satisfies the following conditions:

(1) The vehicle fuel system(s) must not contain either carbon or nitrogen compounds (including air) which, when burned, form any of the pollutants listed in Table A104–1 as exhaust emissions.

(2) All primary and auxiliary equipment and engines must have no emissions of any of the pollutants listed in Table A104–1.

(3) The vehicle fuel system(s) and any auxiliary engine(s) must have no evaporative emissions in use.

(4) Any auxiliary heater must not operate at ambient temperatures above 40 degrees Fahrenheit.

(h) *NMOG standards for flexible- and dual-fueled vehicles when operating on clean alternative fuel*—(1) *Light-duty vehicles, and light light-duty trucks.* Flexible- and dual-fueled LDVs and light LDTs of 1996 model year and later shall meet all standards in Table A104–7 for vehicles of the applicable model year, loaded vehicle weight, and vehicle emission category.

(2) *Light-duty trucks above 6,000 lbs GVWR.* Flexible- and dual-fueled LDTs above 6,000 lbs. GVWR of 1998 model

year and later shall meet all standards in Table A104–8 for vehicles of the applicable test weight and vehicle emission category.

(i) *NMOG standards for flexible- and dual-fueled vehicles when operating on conventional fuel*—(1) *Light-duty vehicles, and light light-duty trucks.* Flexible- and dual-fueled LDVs and light LDTs of 1996 model year and later shall meet all standards in Table A104–9 for vehicles of the applicable model year, loaded vehicle weight, and vehicle emission category.

(2) *Light-duty trucks above 6,000 lbs GVWR.* Flexible- and dual-fueled LDTs of 1998 model year and later shall meet all standards in Table A104–10 for vehicles of the applicable test weight and vehicle emission category.

(j) *Other standards for flexible- and dual-fueled vehicles.* When operating on clean alternative fuel, flexible- and dual- fueled light-duty vehicles and light light-duty trucks must also meet the appropriate standards for carbon monoxide, oxides of nitrogen, formaldehyde, and particulate matter as designated in paragraphs (a) through (f) of this section as well as all other applicable standards and requirements. When operating on conventional fuel, flexible- and dual-fueled vehicles must also meet all other applicable standards and requirements in 40 CFR part 86.

(k) Motor vehicles subject to standards and requirements of this section shall also comply with all applicable standards and requirements of 40 CFR part 86, except that any exhaust emission standards in 40 CFR part 86 pertaining to pollutants for which standards are established in this section shall not apply. For converted vehicles, the applicable standards and requirements of 40 CFR part 86 and this part 88 shall apply based on the model year in which the conversion is performed, regardless of the model year in which the base vehicle was originally manufactured prior to conversion.

(1) Gaseous-fueled, diesel-fueled, and electric clean-fuel vehicles are waived from cold CO test requirements of subpart C of this part if compliance is demonstrated by engineering analysis or test data.

(2) The standards in this section shall be administered and enforced in accordance with the California Regulatory Requirements Applicable to the Clean Fuel Fleet and California Pilot Programs, April 1, 1994, which are incorporated by reference.

(i) This incorporation by reference was approved by the Director of the Federal Register in accordance with 5 U.S.C. 552(a) and 1 CFR part 51.

(ii) Copies may be inspected at U.S. EPA, OAR, 401 M St., SW., Washington, DC 20460, or at the National Archives and Records Administration (NARA). For information on the availability of this material at NARA, call 202–741–6030, or go to: *http://www.archives.gov/federal_register/code_of_federal_regulations/ibr_locations.html.* Copies of these materials may be obtained from Barclay's Law Publishers, 400 Oyster Point Boulevard, P.O. Box 3066, South San Francisco, CA 94080, phone (415) 244–6611.

TABLES TO § 88.104–94

TABLE A104–1—INTERMEDIATE USEFUL LIFE STANDARDS (G/MI) FOR LIGHT-DUTY VEHICLES FOR HCS, CO, NO_X. HCHO, AND PM

Vehicle emission category	NMOG	CO	NO_X	HCHO	PM [1]
TLEV	0.125	3.4	0.4	0.015	.....
LEV	[2] .075	[2] 3.4	.2	[2] .015	.....
ULEV	.040	1.7	[2] .2	.008	.....

[1] Applies to diesel vehicles only.
[2] Applies to ILEVs.

TABLE A104–2—FULL USEFUL LIFE STANDARDS (G/MI) FOR LIGHT-DUTY VEHICLES FOR HCS, CO, NO_X. HCHO, AND PM

	Vehicle emission category	NMOG	CO	NO_X	HCHO	PM [1]
	TLEV	0.156	4.2	0.6	0.018	0.08
	LEV	[2] 0.090	[2] 4.2	.3	[2] .018	[2] .08
	ULEV	.055	2.1	[2] .3	.011	.04

[1] Applies to diesel vehicles only.
[2] Applies to ILEVs.

TABLE A104–3—INTERMEDIATE USEFUL LIFE STANDARDS (G/MI) FOR LIGHT LIGHT-DUTY TRUCKS FOR HCS, CO, NO_X. HCHO, AND PM

LVW (lbs)	Vehicle emission category	NMOG	CO	NO_X	HCHO	PM [1]
0–3750	TLEV	.125	3.4	.4	.015	
	LEV	[2] .075	[2] 3.4	.2	[2] .015	
	ULEV	.040	1.7	[2] .2	.008	
3751–5750	TLEV	0.160	4.4	.7	.018	
	LEV	[2] .100	[2] 4.4	.4	[2] .018	
	ULEV	.050	2.2	[2] .4	.009	

[1] Applies to diesel vehicles only.
[2] Applies to ILEVs.

TABLE A104–4—FULL USEFUL LIFE STANDARDS (G/MI) FOR LIGHT LIGHT-DUTY TRUCKS FOR HCS, CO, NO_X. HCHO, AND PM

LVW (lbs)	Vehicle emission category	NMOG	CO	NO_X	HCHO	PM[1]
0–3750	TLEV	0.156	4.2	0.6	0.018	0.08
	LEV	[2] 0.090	[2] 4.2	0.3	[2] .018	[2] .08
	ULEV	.055	2.1	[2] .3	.011	.04
3751–5750	TLEV	.200	5.5	.9	.023	.08
	LEV	[2] .130	[2] 5.5	.5	[2] .023	[2] .08
	ULEV	.070	2.8	[2] .5	.013	.04

[1] Applies to diesel vehicles only.
[2] Applies to ILEVs.

TABLE A104–5—INTERMEDIATE USEFUL LIFE STANDARDS (G/MI) FOR HEAVY LIGHT-DUTY TRUCKS FOR HCS, CO, NO_X. HCHO, AND PM

ALVW (lbs)	Vehicle emission category	NMOG	CO	NO_X[2]	HCHO	PM[1]
0–3750	LEV	[3] 0.125	[3] 3.4	0.4	[3] 0.015	
	ULEV	.075	1.7	[3] .2	.008	
3751–5750	LEV	[3] .160	[3] 4.4	.7	[3] .018	
	ULEV	.100	2.2	[3] .4	.009	
5751–	LEV	[3] .195	[3] 5.0	1.1	[3] .022	
	ULEV	.117	2.5	[3] .6	.011	

[1] Applies to diesel vehicles only.
[2] Does not apply to diesel vehicles.
[3] Applies to ILEVs.

TABLE A104–6—FULL USEFUL LIFE STANDARDS (G/MI) FOR HEAVY LIGHT-DUTY TRUCKS FOR HCS, CO, NO_X. HCHO, AND PM

ALVW (lbs)	Vehicle emission category	NMOG	CO	NO_X	HCHO	PM[1]
0–3750	LEV	[2] 0.180	[2] 5.0	0.6	[2] 0.022	[2] 0.08
	ULEV	.107	2.5	[2] .3	.012	.04
3751–5750	LEV	[2] .230	[2] 6.4	1.0	[2] .027	[2] .10
	ULEV	.143	3.2	[2] .5	.013	.05
5751–	LEV	[2] .280	[2] 7.3	1.5	[2] .032	[2] .12
	ULEV	.167	3.7	[2] .8	.016	.06

[1] Applies to diesel vehicles only.
[2] Applies to ILEVs.

TABLE A104–7—NMOG STANDARDS (G/MI) FOR FLEXIBLE- AND DUAL-FUELED VEHICLES WHEN OPERATING ON CLEAN ALTERNATIVE FUEL FOR LIGHT LIGHT-DUTY TRUCKS AND LIGHT-DUTY VEHICLES

Vehicle type	50,000 mile NMOG standard	100,000 mile NMOG standard
MY 1996 and later:		
LDTs (0–3,750 lbs. LVW) and LDVs	0.125	0.156
LDTs (3,751–5,750 lbs. LVW)	.160	.200
Beginning MY 2001:		
LDTs (0–3,750 lbs. LVW) and LDVs	.075	.090
LDTs (3,751–5,750 lbs. LVW)	.100	.130

TABLE A104–8—NMOG STANDARDS (G/MI) FOR FLEXIBLE- AND DUAL-FUELED VEHICLES WHEN OPERATING ON CLEAN ALTERNATIVE FUEL FOR HEAVY LIGHT-DUTY TRUCKS

Vehicle type	50,000 mile NMOG standard	120,000 mile NMOG standard
Beginning MY 1998:		
LDTs (0–3,750 lbs. ALVW)	0.125	0.180
LDTs (3,751–5,750 lbs. ALVW)	.160	.230
LDTs (5,751–8,500 lbs. ALVW)	.195	.280

TABLE A104–9—NMOG STANDARDS (G/MI) FOR FLEXIBLE- AND DUAL-FUELED VEHICLES WHEN OPERATING ON CONVENTIONAL FUEL FOR LIGHT LIGHT-DUTY TRUCKS AND LIGHT-DUTY VEHICLES

Vehicle type	50,000 mile NMOG standard	100,000 mile NMOG standard
Beginning MY 1996:		
LDTs (0–3,750 lbs. LVW) and LDVs	0.25	0.31
LDTs (3,751–5,750 lbs. LVW)	.32	.40
Beginning MY 2001:		
LDTs (0–3,750 lbs. LVW) and LDVs	.125	.156
LDTs (3,751–5,750 lbs. LVW)	.160	.200

TABLE A104–10—NMOG STANDARDS (G/MI) FOR FLEXIBLE- AND DUAL-FUELED VEHICLES WHEN OPERATING ON CONVENTIONAL FUEL FOR LIGHT LIGHT-DUTY TRUCKS

Vehicle type	50,000 mile NMOG standard	120,000 mile NMOG standard
Beginning MY 1998:		
LDTs (0–3,750 lbs. ALVW)	0.25	0.36
LDTs (3,751–5,750 lbs. ALVW)	.32	.46
LDTs (5,751–8,500 lbs. ALVW)	.39	.56

[59 FR 50074, Sept. 30, 1994, as amended at 61 FR 127, Jan. 3, 1996]

§ 88.105–94 Clean-fuel fleet emission standards for heavy-duty engines.

(a) Exhaust emissions from engines used in heavy-duty low emission vehicles shall meet one of the following standards:

(1) Combined emissions of oxides of nitrogen and nonmethane hydrocarbons (or nonmethane hydrocarbon equivalent) shall not exceed 3.8 grams per brake horsepower-hour.

(2) Combined emissions of oxides of nitrogen and nonmethane hydrocarbons (or nonmethane hydrocarbon equivalent) shall not exceed 3.5 grams per brake horsepower-hour when tested (certified) on fuel meeting the specifications of California certification fuel.

(b) Exhaust emissions from engines used in heavy-duty low emission vehicles shall meet conventional vehicle standards set forth in Part 86 for total

hydrocarbon, carbon monoxide, particulate, and organic material hydrocarbon equivalent.

(c) Exhaust emissions from engines used in ultra-low emission heavy-duty vehicles shall meet each of the following standards:

(1) The combined emissions of oxides of nitrogen and nonmethane hydrocarbons (or nonmethane hydrocarbon equivalent) shall not exceed 2.5 grams per brake horsepower-hour.

(2) Carbon monoxide emissions shall not exceed 7.2 grams per brake horsepower-hour.

(3) Particulate emissions shall not exceed 0.05 grams per brake horsepower-hour.

(4) Formaldehyde emissions shall not exceed 0.025 grams per brake horsepower-hour.

(d) Exhaust emissions from engines used in inherently-low emission heavy-duty vehicles shall meet each of the following standards:

(1) The combined emissions of oxides of nitrogen and nonmethane hydrocarbons (or nonmethane hydrocarbon equivalent) shall not exceed 2.5 grams per brake horsepower-hour.

(2) Carbon monoxide emissions shall not exceed 14.4 grams per brake horsepower-hour.

(3) Particulate emissions shall not exceed 0.10 grams per brake horsepower-hour.

(4) Formaldehyde emissions shall not exceed 0.05 grams per brake horsepower-hour.

(e) The standards set forth in paragraphs (a), (b), (c), and (d) of this section refer to the exhaust emitted while the vehicle is being tested in accordance with the applicable test procedures set forth in 40 CFR part 86, subpart N.

(f)(1) A heavy-duty zero-emission vehicle (ZEV) has a standard of zero emissions for nonmethane hydrocarbons, oxides of nitrogen, carbon monoxide, formaldehyde, and particulates.

(2) A heavy-duty vehicle shall be certified as a ZEV if it is determined by engineering analysis that the vehicle satisfies the following conditions:

(i) The vehicle fuel system(s) must not contain either carbon or nitrogen compounds (including air) which, when burned, form nonmethane hydrocarbons, oxides of nitrogen, carbon monoxide, formaldehyde, or particulates as exhaust emissions.

(ii) All primary and auxiliary equipment and engines must have no emissions of nonmethane hydrocarbons, oxides of nitrogen, carbon monoxide, formaldehyde, and particulates.

(iii) The vehicle fuel system(s) and any auxiliary engine(s) must have no evaporative emissions.

(iv) Any auxiliary heater must not operate at ambient temperatures above 40 degrees Fahrenheit.

(g) All heavy-duty engines used in low emission, ultra-low emission, or zero emission vehicles shall also comply with all applicable standards and requirements of 40 CFR part 86, except that any exhaust emission standards in 40 CFR part 86 pertaining to pollutants for which standards are established in this section shall not apply.

[59 FR 50077, Sept. 30, 1994]

Subpart B—California Pilot Test Program

§ 88.201–94 Scope.

Applicability. The requirements of this subpart shall apply to the following:

(a) State Implementation Plan revisions for the State of California and other states pursuant to compliance with section 249 of the Clean Air Act, as amended in 1990.

(b) Vehicle manufacturers with sales in the State of California.

[57 FR 60046, Dec. 17, 1992, as amended at 59 FR 50077, Sept. 30, 1994]

§ 88.202–94 Definitions.

(a) The definitions in subpart A also apply to this subpart.

(b) The definitions in this subpart shall apply beginning with the 1992 model year.

Averaging for clean-fuel vehicles means the sale of clean-fuel vehicles that meet more stringent standards than required, which allows the manufacturer to sell fewer clean-fuel vehicles than would otherwise be required.

Banking means the retention of credits, by the manufacturer generating the emissions credits, for use in future

model-year certification as permitted by regulation.

Sales means vehicles that are produced, sold, and distributed (in accordance with normal business practices and applicable franchise agreements) in the State of California, including owners of covered fleets under subpart C of part 86 of this chapter. The manufacturer can choose at their option from one of the following three methods for determining sales:

(i) Sales is defined as sales to the ultimate purchaser.

(ii) Sales is defined as vehicle sales by a manufacturer to a dealer, distributer, fleet operator, broker, or any other entity which comprises the first point of sale.

(iii) Sales is defined as equivalent to the production of vehicles for the state of California. This option can be revoked if it is determined that the production and actual sales numbers do not exhibit a functional equivalence per the language of § 86.708–94(b)(1) of this chapter.

Trading means the exchange of credits between manufacturers.

§ 88.203–94 Abbreviations.

The abbreviations in subpart A of this part and in 40 CFR part 86 apply to this subpart.

§ 88.204–94 Sales requirements for the California Pilot Test Program.

(a) The total annual required minimum sales volume of new clean fuel vehicles in California for this program shall correspond to Table B204.

(b) (1) When manufacturers of vehicles subject to the regulations of this section file a report pursuant to 40 CFR 86.085–37(b), such report shall include the following information: the number of light-duty vehicles and light-duty trucks sold only in California, and the number of clean-fuel vehicles sold for the Pilot program beginning with model year 1996.

(2) For model years 1996 and 1997, manufacturers may exclude heavy light-duty trucks from the reporting required by this section.

(c) (1) Except as provided in paragraph (d) of this section, each vehicle manufacturer must sell clean-fuel vehicles in California in an amount equal to the required annual sales volume calculated in paragraph (c)(2) of this section.

(2) The required annual clean fuel vehicle sales volume for a given manufacturer is expressed in the following equation rounded to the nearest whole number:

$$\mathrm{RMS} = \frac{\mathrm{MS}}{\mathrm{TS}} \times \mathrm{TCPPS}$$

Where:

RMS = a manufacturer's required sales in a given model year.

MS = the average of a manufacturer's total LDV and light LDT sales in California three and four model years earlier than year in question (for MY 1996 and 1997 RMS calculations).

= the average of a manufacturer's total LDV and LDT sales in California three and four model years earlier than year in question (for MY 1998 and later RMS calculations).

TS = the average of total LDV and light LDT sales in California of all manufacturers three and four model years earlier than the year in question (for MY 1996 and 1997 RMS calculations). Sales of manufacturers which meet the criteria of (d) of this paragraph will not be included.

= the average of total LDV and LDT sales in California of all manufacturers three and four model years earlier than the year in question (for MY 1998 and later RMS calculations). Sales of manufacturers which meet the criteria of (d) of this paragraph will not be included.

TCPPS = Pilot program annual CFV sales requirement (either 150,000 or 300,000) for the model year in question.

(i) A manufacturer's share of required annual sales for model years 1996 and 1997 will be based on LDV and light LDT sales only. Once the heavy LDT standards are effective beginning with model year 1998, a manufacturer's required sales share will be based on all LDV and LDT sales.

(ii) A manufacturer certifying for the first time in California shall calculate annual required sales share based on projected California sales for the model year in question. In the second year, the manufacturer shall use actual sales from the previous year. In the third year, the manufacturer will use sales from two model years prior to the year in question. In the fourth year, the manufacturer will use sales from three years prior to the year in question. In

the fifth year and subsequent years, the manufacturer will use average sales from three and four years prior to the year in question.

(d) (1) Small volume manufacturer is defined in the Pilot program as one whose average annual LDV and LDT sales in California are less than or equal to 3,000 units during a consecutive three-year period beginning no earlier than model year 1993.

(i) A manufacturer with less than three consecutive years of sales in California shall use a single year of sales or, if available, the average of two years of sales in California to determine whether they fall at or below the threshold of 3,000 units.

(ii) A manufacturer certifying for the first time in California shall be considered a small volume manufacturer if their projected California sales level is at or below 3,000 units for a given year. Once the manufacturer has actual sales data for one year, this actual sales data shall be used to determine whether the manufacturer qualifies as a small volume manufacturer.

(iii) A manufacturer which does not qualify as a small volume manufacturer in model year 1996 but whose average annual LDV and LDT sales fall to or below the 3,000 unit threshold between 1996 and 2001 shall be treated as a small volume manufacturer and shall be subject to requirements for small volume manufacturers as specified in paragraph (d)(2) of this section beginning with the next model year.

(2) A manufacturer which qualifies as a small volume manufacturer prior to model year 2001 is not required to comply with the sales requirements of this section until model year 2001.

TABLE B204—PILOT PROGRAM VEHICLE SALES SCHEDULE

Model years	Vehicle types	Required annual sales
1996 and 1997	LDTs (<6000 GVWR and ≤5750 LVW); and LDVs.	150,000
1998	All Applicable Vehicle Types	150,000
1999+	All Applicable Vehicle Types	300,000

[59 FR 50078, Sept. 30, 1994, as amended at 61 FR 127, Jan. 3, 1996]

§ 88.205–94 California Pilot Test Program Credits Program.

(a) *General.* (1) The Administrator shall administer this credit program to enable vehicle manufacturers who are required to participate in the California Pilot Test Program to meet the clean-fuel vehicle sales requirements through the use of credits. Participation in this credit program is voluntary.

(2) All credit-generating vehicles must meet the applicable emission standards and other requirements contained in subpart A of this part.

(b) *Credit generation.* (1) Credits may be generated by any of the following means:

(i) Sale of qualifying clean-fuel vehicles earlier than required. Manufacturers may earn these credits starting with the 1992 model year, contingent upon the requirements of paragraph (g) of this section.

(ii) Sale of a greater number of qualifying clean-fuel vehicles than required.

(iii) Sale of qualifying clean-fuel vehicles that meet more stringent emission standards than those required.

(2) For light-duty vehicles and light-duty trucks, credit values shall be determined in accordance with the following:

(i) For model-years through 2000, credit values shall be determined in accordance with table B–1 of this subpart.

(ii) For the 2001 and subsequent model-years, credit values shall be determined according to table B–2 of this subpart. The sale of light-duty vehicles classified as Transitional Low-Emission Vehicles shall not receive credits starting in model year 2001.

(iii) For the calculation of credits for the sale of more clean-fuel vehicles than required, the manufacturer shall designate which sold vehicles count toward compliance with the sales requirement. The remaining balance of vehicles will be considered as sold beyond the sales requirement for credit calculations.

(3) Vehicles greater than 8500 lbs gvwr may not generate credits.

(c) *Credit use.* (1) All credits generated in accordance with these provisions may be freely averaged, traded, or banked for later use. Credits may

not be used to remedy any nonconformity determined by enforcement testing.

(2) There is one averaging and trading group containing all light-duty vehicles and light-duty trucks.

(3) A vehicle manufacturer desiring to demonstrate full or partial compliance with the sales requirements by the redemption of credits, shall surrender sufficient credits, as established in this paragraph (c). In lieu of selling a clean-fuel vehicle, a manufacturer shall surrender credits equal to the credit value for the corresponding vehicle class and model year found in table B–1.3 or table B–2.3 of this subpart.

(d) *Participation in the credit program.* (1) During certification, the manufacturer shall calculate the projected credits, if any, based on required sales projections.

(2) Based on information from paragraph (d)(1) of this section, each manufacturer's certification application under this section must demonstrate:

(i) That at the end of the model-year production, there is a net vehicle credit balance of zero or more with any credits obtained from averaging, trading, or banking.

(ii) It is recommended but not required that the source of the credits to be used to comply with the minimum sales requirements be stated. All such reports should include all credits involved in averaging, trading, or banking.

(3) During the model year, manufacturers must:

(i) Monitor projected versus actual production to be certain that compliance with the sales requirement is achieved at the end of the model year.

(ii) Provide the end of model year reports required under this subpart.

(iii) Maintain the records required under this subpart.

(4) Projected credits based on information supplied in the certification application may be used to obtain a certificate of conformity. However, any such credits may be revoked based on review of end-of-model year reports, follow-up audits, and any other verification steps deemed appropriate by the Administrator.

(5) Compliance under averaging, banking, and trading will be determined at the end of the model year.

(6) If EPA or the manufacturer determines that a reporting error occurred on an end-of-year report previously submitted to EPA under this section, the manufacturer's credits and credit calculations will be recalculated.

(i) If EPA review of a manufacturer's end-of-year report indicates an inadvertent credit shortfall, the manufacturer will be permitted to purchase the necessary credits to bring the credit balance to zero.

(ii) If within 90 days of receipt of the manufacturer's end-of-year report, EPA review determines a reporting error in the manufacturer's favor (i.e., resulting in a positive credit balance) or if the manufacturer discovers such an error within 90 days of EPA receipt of the end-of-year report, the credits will be restored for use by the manufacturer.

(e) *Averaging.* Averaging will only be allowed between clean-fuel vehicles under 8500 lbs gvwr.

(f) *Banking*—(1) *Credit deposits.* (i) Under this program, credits can be banked starting in the 1992 model year.

(ii) A manufacturer may bank credits only after the end of the model year and after EPA has reviewed its end-of-year report. During the model year and before submittal of the end-of-year report, credits originally designated in the certification process for banking will be considered reserved and may be redesignated for trading or averaging.

(2) *Credit withdraws.* (i) After being generated, banked/reserved credits shall be available for use and shall maintain their original value for an infinite period of time.

(ii) A manufacturer withdrawing banked credits shall indicate so during certification and in its credit reports.

(3) Banked credits may be used in averaging, trading, or in any combination thereof, during the certification period. Credits declared for banking from the previous model year but unreviewed by EPA may also be used. However, they may be revoked at a later time following EPA review of the end-of-year report or any subsequent audit actions.

(g) *Early credits.* Beginning in model year 1992 appropriate credits, as determined from the given credit table, will be given for the sale of vehicles certified to the clean-fuel vehicle standards for TLEVs, LEVs, ULEVs, and ZEVs, where appropriate. For LDVs and light LDTs (<6000 lbs GVWR), early credits can be earned from model year 1992 to the beginning of the Pilot Program sales requirements in 1996. For heavy LDTs (>6000 lbs GVWR), early credits can be earned from model years 1992 through 1997. The actual calculation of early credits shall not begin until model year 1996.

[57 FR 60046, Dec. 17, 1992, as amended at 61 FR 127, Jan. 3, 1996]

§ 88.206–94 State opt-in for the California Pilot Test Program.

(a) A state may opt into the Pilot program if it contains all or part of an ozone nonattainment area classified as serious, severe, or extreme under subpart D of Title I.

(b) A state may opt into the program by submitting SIP revisions that meet the requirements of this section.

(c) For a state that chooses to opt in, SIP provisions can not take effect until one year after the state has provided notice to of such provisions to motor vehicle manufacturers and fuel suppliers.

(d) A state that chooses to opt into the program can not require a sales or production mandate for CFVs or clean alternative fuels. States may not subject fuel or vehicle suppliers to penalties or sanctions for failing to produce or sell CFVs or clean alternative fuels.

(e) (1) A state's SIP may include incentives for the sale or use in such state of CFVs required in California by the Clean Fuel Fleet Program, and the use of clean alternative fuels required to be made available in California by the California Pilot Program.

(2) Incentives may include:

(i) A registration fee on non-CFVs of at least 1 percent of the total cost of the vehicle. These fees shall be used to:

(A) Provide financial incentives to purchasers of CFVs and vehicle dealers who sell high volumes or high percentages of CFVs.

(B) Defray administrative costs of the incentive program.

(ii) Exemptions for CFVs from high occupancy vehicle or trip reduction requirements.

(iii) Preferences for CFVs in the use of existing parking places.

[59 FR 50078, Sept. 30, 1994]

TABLES TO SUBPART B OF PART 88

TABLE B–1—CREDIT TABLE FOR PHASE I VEHICLE EQUIVALENTS FOR LIGHT-DUTY VEHICLES AND LIGHT-DUTY TRUCKS

TABLE B–1.1—CREDIT GENERATION: SELLING MORE CLEAN-FUEL VEHICLES THAN REQUIRED

[Phase I: Effective Through 2000 Model-Year]

Vehicle emission category	LDV & LDT ≤6000 gvwr ≤3750 lvw	LDT ≤6000 gvwr >3750 lvw ≤5750 lvw	LDT ≤6000 gvwr ≤3750 alvw	LDT ≤6000 gvwr >3750 alvw ≤5750 alvw	LDT ≤6000 gvwr >5750 alvw
TLEV	1.00	1.28	(1)	(1)	(1)
LEV	1.40	1.76	1.00	1.28	1.56
ULEV	1.68	2.16	1.40	1.76	2.18
ZEV	2.00	2.56	2.00	2.56	3.12

TABLE B–1.2—CREDIT GENERATION: SELLING MORE STRINGENT CLEAN FUEL VEHICLES

Vehicle emission category	LDV & LDT ≤6000 gvwr ≤3750 lvw	LDT ≤6000 gvwr ≤3750 lvw ≤5750 lvw	LDT ≤6000 gvwr ≤3750 alvw	LDT >6000 gvwr ≤3750 alvw ≤5750 alvw	LDT ≤6000 gvwr ≤5750 alvw
TLEV	0.00	0.00	(1)	(1)	(1)
LEV	.40	.48	0.00	0.00	0.00
ULEV	.68	.88	.40	.48	.62
ZEV	1.00	1.28	1.00	1.28	1.56

TABLE B–1.3—CREDIT NEEDED IN LIEU OF SELLING CLEAN-FUEL VEHICLE

Vehicle emission category	LDV & LDT ≤6000 gvwr ≤3750 lvw	LDT ≤6000 gvwr ≤3750 lvw ≤5750 lvw	LDT >6000 gvwr ≤3750 alvw	LDT >6000 gvwr >3750 alvw ≤5750 alvw	LDT >6000 gvwr >5750 alvw
TLEV	1.00	1.28	(1)	(1)	(1)
LEV	.....	.....	1.00	1.28	1.56

[1] There is no TLEV category for this vehicle class.

TABLE B–2—CREDIT TABLE FOR PHASE II: VEHICLE EQUIVALENTS FOR LIGHT-DUTY VEHICLES AND LIGHT-DUTY TRUCKS

TABLE B–2.1—CREDIT GENERATION: SELLING MORE CLEAN-FUEL VEHICLES THAN REQUIRED

[Phase II: effective 2001 and subsequent model-years]

Vehicle emission category	LDV & LDT ≤6000 gvwr ≤3750 lvw	LDT ≤6000 gvwr ≤3750 lvw ≤5750 lvw	LDT ≤6000 gvwr ≤3750 alvw	LDT >6000 gvwr ≤3750 alvw ≤5750 alvw	LDT >6000 gvwr ≤5750 alvw
LEV	1.00	1.26	0.71	0.91	1.11
ULEV	1.20	1.54	1.00	1.26	1.56
ZEV	1.43	1.83	1.43	1.83	2.23

TABLE B–2.2—CREDIT GENERATION: SELLING MORE STRINGENT CLEAN-FUEL VEHICLES

Vehicle emission category	LDV & LDT ≤6000 gvwr ≤3750 lvw	LDT ≤6000 gvwr ≤3750 lvw ≤5750 lvw	LDT ≤6000 gvwr ≤3750 alvw	LDT >6000 gvwr ≤3750 alvw ≤5750 alvw	LDT >6000 gvwr >5750 alvw
LEV	0.00	0.00	0.00	0.00	0.00
ULEV	.20	.28	.29	.34	.45
ZEV	.43	.57	.71	.91	1.11

TABLE B–2.3—CREDIT NEEDED IN LIEU OF SELLING CLEAN-FUEL VEHICLES

Vehicle emission category	LDV & LDT ≤6000 gvwr ≤3750 lvw	LDT ≤6000 gvwr >3750 lvw ≤5750 lvw	LDT >6000 gvwr ≤3750 alvw	LDT >6000 gvwr >3750 alvw ≤5750 alvw	LDT >6000 gvwr >5750 alvw
LEV	1.00	1.26	0.71	0.91	1.11

[59 FR 50079, Sept. 30, 1994]

Subpart C—Clean-Fuel Fleet Program

SOURCE: 58 FR 11901, Mar. 1, 1993, unless otherwise noted.

§ 88.301–93 General applicability.

(a) The requirements of this subpart apply to the following:

(1) State Implementation Plan revisions at 40 CFR part 52 made pursuant to sections 110 and 246 of the CAA (42 U.S.C. 7410 and 7586) hereafter referred to as the ''SIP revision''.

(2) All agencies, departments and instrumentalities of the United States that are subject to the fleet programs established by a state's SIP revision.

(b) The requirements of §§ 88.302–93, 88.303–93, 88.311–93, 88.312–93, and 88.313–93 of this part apply to fleets which voluntarily purchase and operate Inherently Low-Emission Vehicles (ILEVs).

(c) References in this subpart to engine families and emission control systems shall be deemed to refer to durability groups and test groups as applicable for manufacturers certifying new light-duty vehicles and light-duty trucks under the provisions of 40 CFR part 86, subpart S.

[58 FR 11901, Mar. 1, 1993, as amended at 64 FR 23973, May 4, 1999]

§ 88.302–93 Definitions.

The definitions in 40 CFR part 86 of this chapter also apply to this subpart. The definitions in this section apply to this subpart.

Combination heavy-duty vehicle means a vehicle with a GVWR greater than 8,500 pounds (3,900 kilograms) which is comprised of a truck-tractor and one or more pieces of trailered equipment. The truck-tractor is a self-propelled motor vehicle built on one chassis which encompasses the engine, passenger compartment, and a means of coupling to a cargo carrying trailer(s). The truck-tractor itself is not designed to carry cargo.

Inherently Low-Emission Vehicle means any LDV or LDT conforming to the applicable Inherently Low-Emission Vehicle standard, or any HDV with an engine conforming to the applicable Inherently Low-Emission Vehicle standard. No dual-fuel or flexible-fuel vehicles shall be considered Inherently Low-Emission Vehicles unless they are certified to the applicable standard(s) on all fuel types for which they are designed to operate.

Partially-Covered Fleet pertains to a vehicle fleet in a covered area which contains both covered fleet vehicles and non-covered fleet vehicles, i.e., exempt from covered fleet purchase requirements.

Single-unit heavy-duty vehicle means a self-propelled motor vehicle with a GVWR greater than 8,500 pounds (3,900 kilograms) built on one chassis which encompasses the engine, passenger compartment, and cargo carrying function, and not coupled to trailered equipment. All buses, whether or not they are articulated, are considered single-unit vehicles.

§ 88.302–94 Definitions.

The definitions in § 88.302–93 and 40 CFR part 86 also apply to this part. All terms used in this part, but not defined in this section or in § 88.302–93 and 40 CFR part 86 shall have the meaning assigned to them in the Clean Air Act.

Can be centrally fueled means the sum of those vehicles that are centrally fueled and those vehicles that are capable of being centrally fueled.

(1) *Capable of being centrally fueled* means a fleet, or that part of a fleet, consisting of vehicles that could be refueled 100 percent of the time at a location that is owned, operated, or controlled by the covered fleet operator, or is under contract with the covered fleet operator. The fact that one or more vehicles in a fleet is/are not capable of being centrally fueled does not exempt an entire fleet from the program.

(2) *Centrally fueled* means a fleet, or that part of a fleet, consisting of vehicles that are fueled 100 percent of the time at a location that is owned, operated, or controlled by the covered fleet operator, or is under contract with the covered fleet operator. Any vehicle that is under normal operations garaged at home at night but that is, in fact, centrally fueled 100 percent of the time shall be considered to be centrally fueled for the purpose of this definition. The fact that one or more vehicles in a fleet is/are not centrally fueled does not exempt an entire fleet from the program. The fact that a vehicle is not centrally fueled does not mean it could not be centrally fueled in accordance with the definition of ''capable of being centrally fueled.''

(3) *Location* means any building, structure, facility, or installation which; is owned or operated by a person, or is under the control of a person; is located on one or more contiguous properties and contains or could contain a fueling pump or pumps for the use of the vehicles owned or controlled by that person.

Clean-fuel vehicle aftermarket conversion certifier means the business or entity that obtains a certificate of conformity with the clean-fuel vehicle standards and requirements for a vehicle/engine conversion configuration pursuant to the requirements of 40 CFR part 86 and this part 88.

Control means: (1) When it is used to join all entities under common management, means any one or a combination of the following:

(i) A third person or firm has equity ownership of 51 percent or more in each of two or more firms;

(ii) Two or more firms have common corporate officers, in whole or in substantial part, who are responsible for the day-to-day operation of the companies.

(iii) One firm leases, operates, supervises, or in 51 percent or greater part owns equipment and/or facilities used by another person or firm, or has equity ownership of 51 percent or more of another firm.

(2) When it is used to refer to the management of vehicles, means a person has the authority to decide who can operate a particular vehicle, and the purposes for which the vehicle can be operated.

(3) When it is used to refer to the management of people, means a person has the authority to direct the activities of another person or employee in a precise situation, such as at the workplace.

Conversion configuration means any combination of vehicle/engine conversion hardware and a base vehicle of a specific engine family.

Covered fleet operator means a person who operates a fleet of at least ten covered fleet vehicles (as defined in section 241(6) of the Act) and that fleet is operated in a single covered area (even if the covered fleet vehicles are garaged outside of it). For purposes of this definition, the vehicle types described in the definition of *covered fleet* (section 241(5) of the Act) as exempt from the program will not be counted toward the ten-vehicle criterion.

Dealer demonstration vehicle means any vehicle that is operated by a motor vehicle dealer (as defined in section 216(4) of the Act) solely for the purpose of promoting motor vehicle sales, either on the sales lot or through other marketing or sales promotions, or for permitting potential purchasers to drive the vehicle for pre-purchase or pre-lease evaluation.

Emergency vehicle means any vehicle that is legally authorized by a governmental authority to exceed the speed limit to transport people and equipment to and from situations in which speed is required to save lives or property, such as a rescue vehicle, fire truck, or ambulance.

Law enforcement vehicle means any vehicle which is primarily operated by a civilian or military police officer or sheriff, or by personnel of the Federal Bureau of Investigation, the Drug Enforcement Administration, or other agencies of the federal government, or by state highway patrols, municipal law enforcement, or other similar law enforcement agencies, and which is used for the purpose of law enforcement activities including, but not limited to, chase, apprehension, surveillance, or patrol of people engaged in or potentially engaged in unlawful activities. For federal law enforcement vehicles, the definition contained in Executive Order 12759, Section 11: Alternative Fueled Vehicle for the Federal Fleet, Guidance Document for Federal Agencies, shall apply.

Model year, as it applies to the clean fuel vehicle fleet purchase requirements, means September 1 through August 31.

Motor vehicles held for lease or rental to the general public means a vehicle that is owned or controlled primarily for the purpose of short-term rental or extended-term leasing (with or without maintenance), without a driver, pursuant to a contract.

New covered fleet vehicle means a vehicle that has not been previously controlled by the current purchaser, regardless of the model year, except as follows: Vehicles that were manufactured before the start of the fleet program for such vehicle's weight class, vehicles transferred due to the purchase of a company not previously controlled by the purchaser or due to a consolidation of business operations, vehicles transferred as part of an employee transfer, or vehicles transferred for seasonal requirements (i.e., for less than 120 days) are not considered new. States are permitted to discontinue the use of the fourth exception for fleet operators who abuse the discretion afforded them. This definition of new covered fleet vehicle is distinct from the definition of new vehicle as it applies to manufacturer certification, including the certification of vehicles to the clean fuel standards.

Owned or operated, leased or otherwise controlled by such person means either of the following:

(1) Such person holds the beneficial title to such vehicle; or

(2) Such person uses the vehicle for transportation purposes pursuant to a contract or similar arrangement, the term of such contract or similar arrangement is for a period of 120 days or

more, and such person has control over the vehicle pursuant to the definition of control of this section.

Person includes an individual, corporation, partnership, association, State, municipality, political subdivision of a State, and any agency, department, or instrumentality of the United States and any officer, agent, or employee thereof.

Under normal circumstances garaged at personal residence means a vehicle that, when it is not in use, is normally parked at the personal residence of the individual who usually operates it, rather than at a central refueling, maintenance, and/or business location. Such vehicles are not considered to be capable of being central fueled (as defined in this subpart) and are exempt from the program unless they are, in fact, centrally fueled.

Vehicle used for motor vehicle manufacturer product evaluations and tests means a vehicle that is owned and operated by a motor vehicle manufacturer (as defined in section 216(1) of the Act), or motor vehicle component manufacturer, or owned or held by a university research department, independent testing laboratory, or other such evaluation facility, solely for the purpose of evaluating the performance of such vehicle for engineering, research and development, or quality control reasons.

[58 FR 64691, Dec. 9, 1993, as amended at 59 FR 50080, Sept. 30, 1994]

§ 88.303–93 Abbreviations.

The abbreviations in subpart A of this part and in 40 CFR part 86 apply to this subpart. The abbreviations in this section apply to this subpart.

ILEV—Inherently Low-Emission Vehicle.

§ 88.304–94 Clean-fuel Fleet Vehicle Credit Program.

(a) *General*. (1) The SIP revision shall provide for a CFFV credit program to enable covered fleet owners/operators to meet the fleet vehicle purchase requirements of the CAA both by purchasing clean-fuel vehicles (CFVs) directly and by trading and banking CFFV credits for vehicle purchases.

(2) All credit-generating vehicles must meet the applicable emission standards and other requirements contained in 40 CFR part 88, subpart A.

(b) *Program administration*. (1)(i) Each state in which there is all or part of a covered area, as defined in CAA section 246(a)(2), shall promulgate regulations as necessary for implementing this requirement.

(ii) The state shall submit a SIP revision before May 15, 1994 to the Administrator stipulating the specific mechanism by which the CFFV program is to be administered and enforced. The credit program shall commence upon EPA approval of the SIP in accordance with CAA section 246(f)(5).

(2) A fleet owner who purchases/leases a CFFV only to generate CFFV credit shall be subject to the same requirements of the state's CFFV program as a covered fleet owner who purchases/leases a CFFV to demonstrate compliance with covered fleet purchase requirements.

(3) While in the covered area, a dual-fuel/flexible-fuel vehicle which a fleet owner purchases to comply with covered fleet purchase requirements must be operated at all times on the fuel(s) on which it was certified as a CFFV. If the fleet owner receives credit for a dual-fuel/flexible-fuel vehicle purchase, the vehicle must be operated at the same emission level for which the vehicle generated CFFV credit.

(c) *Credit generation*. (1) States shall grant CFFV credits to a covered fleet owner for any of the following qualifying CFFV purchases:

(i) Purchase of a CFFV during any period subsequent to the approval of the SIP revision but prior to the effective date for commencement of a state's CFFV purchase requirement if the purchase meets all other CFFV requirements applicable to such purchases, including the statutory requirement to use only the fuel on which the vehicle was certified as a CFFV;

(ii) Purchase of a greater number of CFFVs than is required under the SIP revision;

(iii) Purchase of a CFFV which meets more stringent emission standards than required under the SIP revision; or

(iv) Purchase of a CFFV in an exempt or non-covered vehicle category by the

owner/operator of a covered or partially-covered fleet.

(2) A state may retroactively grant CFFV credit(s) to a fleet owner for the purchase of a CFFV prior to the approval of the state's SIP revision if the purchase met all CFFV credit program requirements applicable to such purchases, including:

(i) The vehicle purchased would have to have been certified to CFFV emission standards;

(ii) The vehicle purchased would have to have been a dedicated-fuel vehicle;

(iii) If the vehicle purchased was not a dedicated-fuel vehicle, then the fleet owner would have to show that the vehicle had been operated only on the clean alternative fuel on which the vehicle had been certified as a CFFV.

(3) For LDVs and LDTs, credit values shall be determined in accordance with Table C94–1. The state shall use Table C94–1 exclusively in determining LDV and LDT CFFV credit values. Table C94–1.1 applies to paragraphs (c)(1) (i), (ii) and (iv) of this section; Table C94–1.2 applies to paragraph (c)(1)(iii) of this section.

(4) In lieu of determining credit values in accordance with Table C94–1, a state may specify in its SIP revision that Table C94–2 will be used to determine LDV and LDT CFFV credit values in one or more affected nonattainment areas. Any state choosing to do so must provide adequate justification, based on air quality benefits, at the time the SIP revision is submitted. If the use of Table C94–2 is approved by EPA, the State shall use Table C94–2 exclusively in determining LDV and LDT CFFV credit values for vehicles in the subject area or areas. Table C94–2.1 applies to paragraphs (b)(1) (i), (ii) and (iv) of this section; Table C94–2.2 applies to paragraph (b)(1)(iii) of this section.

(5) In lieu of determining credit values in accordance with Table C94–1, a state containing a carbon monoxide nonattainment area(s) having a design value above 16.0 parts per million may specify in its SIP revision that Table C94–3 will be used to determine LDV and LDT CFFV credit values in one or more affected nonattainment areas. Any state choosing to do so must provide adequate justification, based on air quality benefits, at the time the SIP revision is submitted. If the use of Table C94–3 is approved by EPA, the state shall use Table C94–3 exclusively in determining LDV and LDT CFFV credit values for vehicles in the subject area or areas. Table C94–3.1 applies to paragraphs (b)(1) (i), (ii) and (iv) of this section; Table C94–3.2 applies to paragraph (b)(1)(iii) of this section.

(6) For HDVs, credit values shall be determined in accordance with Table C94–4. The state shall use Table C94–4 exclusively in determining heavy-duty vehicle CFFV credit values. Table C94–4.1 applies to paragraphs (c)(1) (i), (ii) and (iv) of this section, and Table C94–4.2 applies to paragraph (c)(1)(iii) of this section.

(7) In lieu of determining credit values in accordance with Table C94–4, a state containing a carbon monoxide nonattainment area(s) having a design value above 16 parts per million may specify in its SIP revision that Table C94–5 will be used to determine heavy-duty vehicle CFFV credit values in one or more affected nonattainment areas. Any state choosing to do so must provide adequate justification, based on air quality benefits, at the time the SIP revision is submitted. If the use of Table C94–5 is approved by EPA, the State shall use Table C94–5 exclusively in determining heavy-duty vehicle CFFV credit values for vehicles in the subject area or areas. Table C94–5.1 applies to paragraphs (b)(1) (i), (ii) and (iv) of this section; Table C94–5.2 applies to paragraph (b)(1)(iii) of this section.

(8) Credit values shall be rounded to two decimal places.

(9) *Heavy heavy-duty vehicles.* (i) States must allow purchase of any clean-fuel single-unit or combination HDV with a GVWR greater than 26,000 pounds (11,800 kilograms) to generate CFFV credit for the fleet vehicle purchaser.

(ii) States must exclude from generating CFFV credit the purchase of any combination HDV with a GVWR greater than 26,000 pounds (11,800 kilograms) which pays all or a portion of its fuel taxes, as evidenced by fuel tax stickers on the combination HDV, to a state(s) which is not part of that covered nonattainment area.

(10) *Light-duty CFFV credits.* Credits generated by the purchase of a qualifying clean-fuel fleet LDV or a LDT shall be designated at the time of issuance as light-duty CFFV credits.

(11) *Heavy-duty CFFV credits.* Credits generated by the purchase of a qualifying clean-fuel fleet HDV shall be designated at the time of issuance as heavy-duty CFFV credits. Further, credits generated by the purchase of a light heavy-duty or a medium heavy-duty qualifying CFFV shall be designated at the time of issuance as light heavy-duty and medium heavy-duty CFFV credits, respectively.

(d) *Credit use.* (1) All credits generated in accordance with these provisions may be freely traded or banked for later use, subject to the provisions contained in this subpart, without discount or depreciation of such credits.

(2) A covered fleet owner or operator desiring to demonstrate full or partial compliance with covered fleet purchase requirements by the redemption of credits shall surrender sufficient credits as established in this paragraph. In lieu of purchasing a CFFV, a fleet owner or operator shall surrender credits equal to the credit value for the corresponding vehicle class and credit calculation method used in that area from either Table C94–1.3, C94–2.3, C94–3.3, C94–4.3, or C94–5.3 of this subpart.

(3) Credits earned within the boundaries of a covered nonattainment area may be traded within those boundaries whether or not that area encompasses parts of more than one state.

(4) Credits issued as a result of CFFV purchase requirements in one nonattainment area may not be used to demonstrate compliance in another nonattainment area, even if a state contains more than one covered nonattainment area.

(5) Credit allocation. (i) Credits generated by the purchase of LDVs and LDTs of 8,500 pounds (3,900 kilograms) GVWR or less may be used to demonstrate compliance with covered fleet purchase requirements applicable to LDVs or LDTs of 8,500 pounds (3,900 kilograms) GVWR or less.

(ii) Credits generated by the purchase of vehicles of more than 8,500 pounds (3,900 kilograms) GVWR may not be used to demonstrate compliance with the covered fleet purchase requirements for vehicles weighing 8,500 pounds (3,900 kilograms) GVWR or less.

(iii) Credits generated by the purchase of vehicles of 8,500 pounds (3,900 kilograms) GVWR or less may not be used to demonstrate compliance with requirements for vehicles of more than 8,500 pounds (3,900 kilograms) GVWR.

(iv) Credits generated by the purchase of a HDV of a particular weight subclass may be used to demonstrate compliance with required heavy-duty vehicle purchases for the same or lighter weight subclasses. These credits may not be used to demonstrate compliance with required HDV purchases for vehicles of heavier weight subclasses than the weight subclass of the vehicle which generated the credits.

§ 88.305–94 Clean-fuel fleet vehicle labeling requirements for heavy-duty vehicles.

(a) All clean-fuel heavy-duty engines and vehicles used as LEVs, ULEVs, and ZEVs that are also regulated under 40 CFR part 86 shall comply with the labeling requirements of 40 CFR 86.095–35 (or later applicable sections), and shall also include an unconditional statement on the label indicating that the engine or vehicle is a LEV, ULEV, or ZEV, and meets all of the applicable requirements of this part 88.

(b) All heavy-duty clean-fuel fleet vehicles not regulated under 40 CFR part 86 shall have a permanent legible label affixed to the engine or vehicle in a readily visible location, which contains the following information:

(1) The label heading: vehicle emissions classification information (e.g., ''This is a Low Emission Vehicle'');

(2) Full corporate name and trademark of the manufacturer;

(3) A statement that this engine or vehicle meets all applicable requirements of the U.S. Environmental Protection Agency clean-fuel fleet vehicle program, as described in this part 88, but not necessarily those requirements found in 40 CFR part 86.

[59 FR 50080, Sept. 30, 1994]

§ 88.306–94 Requirements for a converted vehicle to qualify as a clean-fuel fleet vehicle.

(a) For purposes of meeting the requirements of section 246 of the Clean Air Act or the SIP revisions, conversions of engines or vehicles which satisfy the requirements of this section shall be treated as a purchase of a clean-fuel vehicle under subpart C of this part.

(b) The engine or vehicle must be converted using a conversion configuration which has been certified according to the provisions of 40 CFR part 86 using applicable emission standards and other provisions from part 88 for clean-fuel engines and vehicles. The following requirements will also apply:

(1) If the installation of the certified conversion configuration is performed by an entity other than aftermarket conversion certifier, the aftermarket conversion certifier shall submit a list of such installers to the Administrator. Additional installers must be added to this list and the revised list submitted to the Administrator within 5 working days from the time they are authorized to perform conversion installations by the clean-fuel vehicle aftermarket conversion certifier.

(2) If the installation of the certified conversion configuration is performed by an entity other than the certificate holder, the certificate holder shall provide instructions for installation of the aftermarket conversion system to installers listed on the certificate, and ensure that the systems are properly installed.

(3) For the purpose of determining whether certification under the Small-Volume Manufacturers Certification Program pursuant to the requirements of 40 CFR 86.094–14 is permitted, the 10,000 sales volume limit in 40 CFR 86.094–14(b)(1) is waived for a certifier of a clean-fuel vehicle aftermarket conversion.

(4) Clean-fuel vehicle aftermarket conversion certifiers that are subject to the post-installation emissions testing requirements in paragraph (c) of this section and who will satisfy these requirements by using the two speed idle test procedure detailed in paragraph (c)(2)(ii) of this section must conduct the following testing at the time of certification in order to generate the required certification CO emissions reference values. The certification CO emissions reference values generated must be submitted to the Administrator at the time of application for certification.

(i) For dual and flexible fuel vehicles, certification reference values must be generated for each certification test fuel required for exhaust emissions testing pursuant to 40 CFR 86.113 or 40 CFR 86.1313.

(ii) For light-duty vehicles and light-duty trucks the test fuels used during the emissions testing required by paragraph (b)(3) of this section must comply with the fuel specifications for exhaust emissions testing found in 40 CFR 86.113. For heavy-duty engines the test fuels used during the emissions testing required by paragraph (b)(3) of this section must comply with the fuel specifications for exhaust emissions testing found in 40 CFR 86.1313.

(iii) Single, consecutive idle mode and high-speed mode segments of the two speed idle test must be conducted pursuant to the requirements of 40 CFR 85.2215 and as modified by the provisions of paragraph (c)(4)(ii)(D) of this section and this paragraph to determine the required certification CO emission reference values.

(A) The certification CO emission reference value for the idle mode of the test will be the simple average of all emissions measurements taken during an idle mode of 90 seconds duration pursuant to the requirements in 40 CFR 85.2215(a).

(B) The certification CO emission reference value for the high-speed mode of the test will be the simple average of all emissions measurements taken during a high-speed mode of 180 seconds duration pursuant to the requirements in 40 CFR 85.2215(a).

(c) Except as provided in paragraph (c)(1) of this section, each converted vehicle manufactured by a clean-fuel vehicle aftermarket conversion certifier with aggregate sales of less than 10,000 converted vehicles within a given calendar year must satisfy the post-installation emissions testing requirements of paragraph (c)(2) of this section. If a vehicle fails to satisfy the emissions testing requirements such

vehicle may not be considered a clean-fuel vehicle until such noncompliance is rectified and compliance is demonstrated.

(1) A clean-fuel vehicle aftermarket conversion certifier with estimated sales of 300 or fewer engines and vehicles in a calendar year and which sells or converts vehicles outside of a nonattainment area (as classified under subpart D of Title I) which has an inspection and maintenance program that includes a test of carbon monoxide emissions may submit a request to the Administrator for an exemption from the post-installation emission test requirements of paragraph (c) of this section. If granted, such an exemption would apply to converted vehicles that have the conversion installation performed outside of a nonattainment area which has an inspection and maintenance program that includes a test of carbon monoxide emissions.

(i) The request for exemption submitted to the Administrator must include the following:

(A) The estimated number of engines and vehicles that will be converted in the calendar year.

(B) Sufficient information to demonstrate that complying with the post-installation emission test requirement represents a severe financial hardship.

(C) A description of any emission related quality control procedures used.

(ii) Within 120 days of receipt of the application for exemption, the Administrator will notify the applicant either that an exemption is granted or that sufficient cause for an exemption has not been demonstrated and that all of the clean-fuel vehicle aftermarket conversion certifier's vehicles are subject to the post-installation test requirement of paragraph (c)(2) of this section.

(iii) If the clean-fuel vehicle aftermarket conversion certifier granted an exemption originally estimates that 300 or fewer conversions would be performed in the calendar year, and then later revises the estimate to more than 300 for the year, the certifier shall inform the Administrator of such revision. A post-installation emissions test for each conversion performed after the estimate is revised is required pursuant to the requirements of paragraph (c)(2) of this section. The estimated number of conversions from such a clean-fuel vehicle aftermarket conversion certifier must be greater than 300 in the following calendar year.

(2) A clean-fuel vehicle aftermarket conversion certifier with aggregate sales less than 10,000 converted vehicles within a given calendar year shall conduct post-installation emissions testing using either of the following test methods:

(i) The carbon monoxide (CO) emissions of the converted vehicle must be determined in the manner in which CO emissions are determined according to the inspection and maintenance requirements applicable in the area in which the vehicle is converted or is expected to be operated.

(A) For dual-fuel vehicles, a separate test is required for each fuel on which the vehicle is capable of operating. For flexible fuel vehicles, a single test is required on a fuel that falls within the range of fuel mixtures for which the vehicle was designed. The test fuel(s) used must be commercially available.

(B) A converted vehicle shall be considered to meet the requirements of this paragraph if the vehicle's measured exhaust CO concentration(s) is lower than the cutpoint(s) used to determine CO pass/fail under the inspection and maintenance program in the area in which the conversion is expected to be operated.

(*1*) If CO pass/fail criteria are not available for a vehicle fuel type then pass/fail criteria specific to gasoline use are to be used for vehicles of that fuel type.

(*2*) [Reserved]

(ii) The carbon monoxide (CO) emissions of the converted vehicle must be determined in the manner specified in the two speed idle test-EPA 91 found in 40 CFR 85.2215. All provisions in the two speed idle test must be observed except as detailed in paragraph (c)(2)(ii)(D) of this section.

(A) For dual and flexible fuel vehicles, a separate test is required for each certification test fuel required for exhaust emissions testing pursuant to 40 CFR 86.113 or 40 CFR 86.1313.

(B) For light-duty vehicles and light-duty trucks the test fuels used during

the emissions testing required by paragraph (c)(4) of this section must comply with the fuel specifications for exhaust emissions testing found in 40 CFR 86.113. For heavy-duty engines the test fuels used during the emissions testing required by paragraph (c)(2) of this section must comply with the fuel specifications for exhaust emissions testing found in 40 CFR 86.1313.

(C) A converted vehicle shall be considered to meet the requirements of this paragraph if the following criteria are satisfied:

(*1*) The vehicle's measured idle mode exhaust CO concentration(s) must be lower than the sum of 0.4 percent CO plus the idle mode certification CO emissions reference value as determined according to the requirements of paragraph (b)(3) of this section.

(*2*) The vehicle's measured high-speed mode exhaust CO concentration(s) must be lower than the sum of 0.4 percent CO plus the high-speed certification CO emissions reference value as determined according to the requirements of paragraph (b)(3) of this section.

(D) For the purposes of the post-installation emissions testing required by paragraph (c) of this section, the following adjustments to the two speed idle test-EPA 91 in 40 CFR 85.2215 are necessary.

(*1*) Testing of hydrocarbon emissions and equipment associated solely with hydrocarbon emissions testing is not required.

(*2*) The CO emissions pass/fail criteria in 40 CFR 85.2215(a)(2), (c)(1)(ii)(A), (c)(2)(ii)(A)(*1*), (c)(2)(iii)(A)(*1*), and (d)(3)(i) are to be replaced with the pass/fail criteria detailed in paragraph (c)(2)(ii)(C) of this section. All HC pass/fail criteria in 40 CFR 85.2215 do not apply.

(*3*) The void test criteria in 40 CFR 85.2215(a)(3) and (b)(2)(iv) associated with maintaining the measured concentration of CO plus CO_2 above six percent does not apply. However, the Administrator may reconsider requiring that the void test criteria in 40 CFR 85.2215(a)(3) and (b)(2)(iv) be applied, and may issue an advisory memorandum to this effect in the future.

(*4*) The ambient temperature levels encountered by the vehicle during testing must comply with the specifications in 40 CFR 86.130 or 40 CFR 86.1330.

(d) The clean-fuel vehicle aftermarket conversion certifier shall be considered a manufacturer for purposes of Clean Air Act sections 206 and 207 and related enforcement provisions, and must accept liability for in-use performance of all the vehicles produced under the certificate of conformity as outlined in 40 CFR part 85.

(1) The useful life period for the purposes of determining the in-use liability of the clean-fuel vehicle aftermarket conversion certifier shall be the original useful life of the vehicle prior to conversion.

(2) [Reserved]

(e) *Tampering*. (1) The conversion from an engine or vehicle capable of operating on gasoline or diesel fuel only to a clean-fuel engine or vehicle shall not be considered a violation of the tampering provisions of Clean Air Act section 203(a)(3), if such conversion is done pursuant to a conversion configuration certificate by the aftermarket conversion certifier or by an installer listed on the certificate.

(2) In order to comply with the provisions of this subpart, an aftermarket conversion installer must:

(i) Install a certified aftermarket conversion system for which the installer is listed by the certifier; and

(ii) Perform such installation according to instructions provided by the aftermarket conversion certifier.

(f) *Data collection*. The clean-fuel vehicle aftermarket conversion certifier is responsible for maintaining records of each engine and vehicle converted for use in the Clean Fuel Fleets program for a period of 5 years. The records are to include the engine or vehicle make, engine or vehicle model, engine or vehicle model year, and engine or vehicle identification number of converted engines and vehicles; the certification number of the conversion configuration; the brand names and part numbers of the parts included in the conversion configuration; the date of the conversion and the facility at which the conversion was performed; and the results of post-installation

emissions testing if required pursuant to paragraph (c) of this section.

[59 FR 50080, Sept. 30, 1994, as amended at 61 FR 129, Jan. 3, 1996]

§ 88.307–94 Exemption from temporal transportation control measures for CFFVs.

(a) States with covered areas shall exempt any CFFV required by law to participate in the clean-fuel fleet program or any vehicle generating credits under § 88.304–94(c) from transportation control measures (TCMs) existing wholly or partially for air quality reasons included in an approved state implementation plan which restrict vehicle usage based primarily on temporal considerations, such as time-of-day and day-of-week exemptions. However, CFFVs shall not qualify for TCMs where the temporal element is secondary to some other control element and, in no case, shall such exemptions apply if they create a clear and direct safety hazard. This exemption does not include access to high occupancy vehicle (HOV) lanes, except as provided in § 88.313–93.

(b) States shall also grant temporal TCM exemptions to qualifying CFFVs being operated after SIP approval, but prior to the effective date for commencement of a state's CFFV credit program.

(c) Temporal TCM exemptions provided for in paragraph (a) of this section are not effective outside of the areas for which states can be required to establish CFFV credit programs.

(1) Such exemptions shall remain effective only while the subject vehicle remains in compliance with applicable CFFV emissions standards and other CFFV credit program requirements.

(2) CFFV TCM exemptions shall not be transferred between vehicles within the same fleet nor shall they be sold or traded.

§ 88.308–94 Programmatic requirements for clean-fuel fleet vehicles.

(a) *Multi-State nonattainment areas.* The states comprising a multi-State nonattainment area shall, to the greatest extent possible, promulgate consistent clean-fuel fleet vehicle programs.

(b) *Program start date.* The SIP revision shall provide that the clean fuel vehicle purchase requirements begin to apply no later than model year 1999.

[59 FR 50082, Sept. 30, 1994, as amended at 63 FR 20107, Apr. 23, 1998]

§ 88.309 [Reserved]

§ 88.310–94 Applicability to covered Federal fleets.

(a) *Compliance by Federal vehicles.* As per section 258(a) of the Act, fleets owned or operated by any agency, department, or instrumentality of the United States shall comply with the applicable state regulations concerning CFFVs established in the SIP revision. Such fleets shall be treated in the same manner as private or other government fleets under the applicable state regulations.

(1) Federal agencies shall obtain CFFVs from original equipment manufacturers, to the extent possible, as required under section 248 of the CAA.

(2) The Secretary of Defense may exempt any vehicle(s) from the provisions of any CFFV credit program established in the SIP revision by certifying to the Administrator in writing that inclusion of the specified vehicle(s) in such a program could have an adverse impact on the national security. The Secretary of Defense shall also provide a copy of this statement of exemption to the state agency administering the CFFV credit program in the covered area in which the specified vehicle(s) is registered/operated.

(b) [Reserved]

§ 88.311–93 Emissions standards for Inherently Low-Emission Vehicles.

(a) *Certification.* (1) Emissions Testing Procedures. A vehicle shall be certified as an ILEV if that vehicle satisfies the following conditions:

(i) The vehicle shall be certified under the appropriate exhaust emissions standards from paragraph (c) or (d) of this section depending on the vehicle's weight classification.

(ii) The vehicle shall be certified as having fuel vapor emissions which are five or less total grams per test as measured by the current Federal Test Procedure (FTP), modified for ILEV

certification, from 40 CFR part 86, subpart B for LDVs and LDTs and from 40 CFR part 86, subpart M for HDVs.

(A) After disabling any and all auxiliary emission control devices (canister, purge system, etc.) related to control of evaporative emissions, the fuel vapor emissions shall be measured using the FTP regulations in effect at the time the vehicle is to be certified as an ILEV. For purposes of this section, the vehicle's fuel vapor emissions shall consist of the total grams of diurnal, hot soak, running loss, and resting loss emissions, as appropriate, for the particular fuel/vehicle/engine combination to be tested. In determining ILEV evaporative emissions, the diurnal emissions measurement procedure shall consist of a single diurnal heat build using an ambient or fuel temperature range of 72°–96 °F (22°–36 °C), as appropriate for the applicable FTP regulations (40 CFR part 86).

(B) Conventional Federal Test Procedure. A vehicle with no evaporative emissions control system components may have its evaporative emissions certified for its particular GVWR weight class/subclass if it passes the conventional evaporative emissions FTP from 40 CFR part 86, subpart B for LDVs and LDTs or from 40 CFR part 86, subpart M for HDVs, as applicable.

(iii) The vehicle must meet other special requirements applicable to conventional or clean-fuel vehicles and their fuels as described in any other parts of this chapter, including 40 CFR parts 86 and 88.

(2) Vehicles which have a closed or sealed fuel system may be certified at the administrator's option by engineering evaluation in lieu of testing. These vehicles will be certified as ILEVs only if a leak in the fuel system would result in the vehicle becoming inoperative due to loss of fuel supply, or if half the fuel escapes within 24 hours.

(b) *Identification*. In the application for a vehicle's certification as an ILEV, the manufacturer or the manufacturer's agent shall provide for positive identification of the vehicle's status as an ILEV in the vehicle's Vehicle Emission Control Information (VECI) label in accordance with 40 CFR 86.094–35 and 86.095–35. The label shall contain a highlighted statement (e.g., underscored or boldface letters) that the vehicle is certified to applicable emission standards for ILEV exhaust and evaporative emission standards.

(c) *Light-duty vehicles and light-duty trucks*. ILEVs in LDV and LDT classes shall have exhaust emissions which do not exceed the LEV exhaust emission standards for NMOG, CO, HCHO, and PM and the ULEV exhaust emission standards for NO_X listed in Tables A104–1 through A104–6 for light-duty CFVs. Exhaust emissions shall be measured in accordance with the test procedures specified in § 88.104–94(k). An ILEV must be able to operate on only one fuel, or must be certified as an ILEV on all fuels on which it can operate. These vehicles shall also comply with all requirements of 40 CFR part 86 which are applicable to conventional gasoline-fueled, methanol-fueled, diesel-fueled, natural gas-fueled or liquified petroleum gas-fueled LDVs/LDTs of the same vehicle class and model year.

(d) *Heavy-duty vehicles*. ILEVs in the HDV class shall have exhaust emissions which do not exceed the exhaust emission standards in grams per brake horsepower-hour listed in § 88.105–94(d). Exhaust emissions shall be measured in accordance with the test procedures specified in § 88.105–94(e). An ILEV must be able to operate on only one fuel, or must be certified as an ILEV on all fuels on which it can operate. These vehicles shall also comply with all requirements of 40 CFR part 86 which are applicable in the case of conventional gasoline-fueled, methanol-fueled, diesel-fueled, natural gas-fueled or liquified petroleum gas-fueled HDVs of the same weight class and model year.

(e) *Applicability*. State actions to opt out of the clean-fuel fleet program under section 182(c) of the Act do not affect the applicability of the ILEV program in the affected states.

[57 FR 60046, Dec. 17, 1992, as amended at 59 FR 48536, Sept. 21, 1994; 59 FR 50082, Sept. 30, 1994, 61 FR 127, Jan. 3, 1996]

§ 88.311–98 Emissions standards for Inherently Low-Emission Vehicles.

Section 88.311–98 includes text that specifies requirements that differ from § 88.311–93. Where a paragraph in § 88.311–93 is identical and applicable to

§ 88.311–98, this may be indicated by specifying the corresponding paragraph and the statement ''[Reserved]. For guidance see § 88.311–93.''

(a) heading through (a)(1)(ii) [Reserved]. For guidance see § 88.311–93.

(iii) The vehicle must meet other special requirements applicable to conventional or clean-fuel vehicles and their fuels as described in any other regulations in 40 CFR chapter I, subchapter C, including 40 CFR parts 86 and 88 (e.g., onboard refueling provisions).

(b)–(e) [Reserved]. For guidance see § 88.311–93.

[59 FR 16309, Apr. 6, 1994]

EFFECTIVE DATE NOTE: The new information collection requirements for § 88.311–98 published in the FEDERAL REGISTER at 59 FR 16309, Apr. 6, 1994, which apply to 1998 and later model year vehicles, have not been approved by the Office of Management and Budget (OMB) and are not effective.

§ 88.312–93 Inherently Low-Emission Vehicle labeling.

(a) *Label design*. (1) Label design shall consist of either of the following specifications:

(i) The label shall consist of a white rectangular background, approximately 12 inches (30 centimeters) high by 18 inches (45 centimeters) wide, with ''CLEAN AIR VEHICLE'' printed in contrasting block capital letters at least 4.3 inches (10.6 centimeters) tall and 1.8 inches (4.4 centimeters) wide with a stroke width not less than 0.5 inches (1.3 centimeters). In addition, the words ''INHERENTLY LOW-EMISSION VEHICLE'' must be present in lettering no smaller than 1 inch (2.5 centimeters) high. Nothing shall be added to the label which impairs readability. Labels shall include a serialized identification number; or

(ii) The label shall consist of a white truncated-circular background, approximately 10 inches (25 centimeters) in diameter by 7 inches (17.5 centimeters) in height. The bottom edge of the truncated-circular background shall be approximately 2 inches (5 centimeters) from the center. The acronym ''ILEV'' shall be printed on the label in contrasting block capital letters at least 2 inches (5 centimeters) tall and 1.5 inches (3.8 centimeters) wide with a stroke width not less than 0.4 inches (1.0 centimeter). In addition, the words ''CLEAN AIR VEHICLE'' must be present in lettering no smaller than 0.8 inches (2.0 centimeters) high. Nothing shall be added to the label which impairs readability. Labels shall include a serialized identification number.

(2) The ILEV label shall be fabricated or affixed to a vehicle in such a manner that its removal from the vehicle cannot be accomplished without defacing or destroying the label in whole or in part.

(3) Along with the manufacturer's application to certify a particular ILEV engine class, the manufacturer or the manufacturer's agent shall submit to EPA ILEV labels or reasonable facsimiles of the types which may be mounted on a certified ILEV vehicle of that class.

(b) *Eligibility*. Vehicle manufacturers or their agents must install ILEV labels on a certified ILEV vehicle at the time of its sale to an eligible fleet owner if the vehicle is to be eligible for expanded TCM exemptions. An eligible fleet owner is one who is in a covered area and owns a total of at least ten motor vehicles (including the ILEV(s) being purchased) which operate in the owner's fleet. All of the following shall be provided to demonstrate eligibility: Photocopies of no less than nine motor vehicle registrations indicating registration in the ILEV purchaser's name, a signed statement by the ILEV purchaser that these vehicles are operational in the purchaser's fleet and that the ILEV being purchased will also be operated in this fleet, and a signed statement by the ILEV purchaser that the ILEV labels will be removed and disposed of when the vehicle is sold, given, leased (except as part of a daily rental fleet), or offered for long-term loan to someone who has not demonstrated eligibility for expanded TCMs available to ILEVs according to these criteria.

(c) *ILEV Label installation*. (1) Except as provided for in this paragraph (c), no person shall attach an ILEV label or any facsimile of an ILEV label to any vehicle.

(2)(i) The manufacturer or the manufacturer's agent shall attach three labels on the vehicle in plain sight: One

on the rear of the vehicle and one on each of two sides of the vehicle. Each label shall conform to the specifications of paragraph (a) of this section.

(ii) In the case that an ILEV label of the proportions specified in paragraph (a)(1) of this section cannot be attached to the rear of the ILEV, the manufacturer or the manufacturer's agent shall attach to the rear of the vehicle an ILEV label of either of the following proportions:

(A) The label shall consist of a white rectangular background, approximately 4 inches (10 centimeters) high by 24 inches (60 centimeters) wide, with ''CLEAN AIR VEHICLE'' printed in contrasting block capital letters at least 2.8 inches (7 centimeters) tall and 1.3 inches (3.3 centimeters) wide with a stroke width not less than 0.3 inches (0.8 centimeter). In addition, the words ''INHERENTLY LOW-EMISSION VEHICLE'' must be present in lettering no smaller than 0.6 inches (1.5 centimeters) high. Nothing shall be added to the label which impairs readability. Labels shall include a serialized identification number; or

(B) The label shall consist of a white truncated-circular background, approximately 5 inches (12.5 centimeters) in diameter by 3.5 inches (8.8 centimeters) in height. The bottom edge of the truncated-circular background shall be approximately 1 inch (2.5 centimeters) from the center. The acronym ''ILEV'' shall be printed on the label in contrasting block capital letters at least 1 inch (2.5 centimeters) tall and 0.8 inches (2.0 centimeters) wide with a stroke width not less than 0.3 inches (0.8 centimeters). In addition, the words ''CLEAN AIR VEHICLE'' must be present in lettering no smaller than 0.4 inches (1.0 centimeter) high. Nothing shall be added to the label which impairs readability. Labels shall include a serialized identification number.

(d) *Label removal.* Fleet ILEV owners shall remove and dispose of the ILEV labels on a vehicle before selling or transferring ownership of an ILEV or offering it for lease (unless the ILEV is part of a daily rental fleet) or long-term loan. This provision shall not apply if the person who is receiving the vehicle demonstrates eligibility for expanded TCM exemptions under the federal ILEV program as described in paragraph (b) of this section, or is otherwise qualified under state regulations which expressly expand ILEV label eligibility.

(e) *Label replacement.* (1) The manufacturer shall make replacement ILEV labels available to the fleet owner of a qualifying ILEV to replace any ILEV label which has been lost or removed due to vehicle damage, repair, sale, or lease. The fleet owner's request shall include proof of ownership of the ILEV in question and proof of the fleet owner's eligibility for ILEV TCM exemptions, as outlined in paragraph (c) of this section. Each label shall be imprinted with the same serial number as initially assigned to the damaged/missing ILEV label(s) for that vehicle. Any portion of a damaged label remaining on the ILEV shall be removed from the vehicle and submitted with the request as proof of loss.

(2) Upon receipt of the replacement ILEV label(s), the fleet owner shall attach the new ILEV label(s) only to the vehicle for which replacement ILEV label(s) were requested.

[58 FR 11901, Mar. 1, 1993, as amended at 61 FR 128, Jan. 3, 1996]

§ 88.313–93 Incentives for the purchase of Inherently Low-Emission Vehicles.

(a) *Administration.* (1) The incentives granted to ILEVs provided in this section are not effective outside of nonattainment areas for which states are required to establish CFFV programs under section 246 of the CAA, unless specifically added by states for qualifying vehicles.

(2) Incentives for purchasing ILEVs shall not be transferred between vehicles within the same fleet nor shall they be sold or traded.

(3) No vehicle over 26,000 pounds (11,800 kilograms) GVWR shall be eligible for the following ILEV incentives.

(b) *Exemption from temporal TCMs.* A fleet vehicle which has been certified and labeled as an ILEV according to the provisions of this section and which continues to be in compliance with applicable emissions standards and other ILEV program requirements shall be exempted from TCMs existing

for air quality reasons included in approved state implementation plans which restrict vehicle usage based primarily on temporal considerations, such as time-of-day and day-of-week exemptions.

(c) *Exemption from high-occupancy vehicle lane restrictions.* (1) A fleet vehicle which has been certified and labeled as an ILEV according to the provisions of §§ 88.311 and 88.312 and which continues to be in compliance with applicable emissions standards and other ILEV program requirements shall be exempt from TCMs which restrict a vehicle's access to certain roadway lanes based on the number of occupants in that vehicle, usually known as high-occupancy vehicle (HOV) lanes. These exemptions shall not apply if they would create a clear and direct safety hazard.

(2) In a state containing a covered area, or areas, the governor may petition the Administrator for a waiver from the exemption from HOV lane restrictions for ILEVs for any section of HOV lane in the covered area(s) that can be shown to be congested primarily due to the operation or projected operation of ILEVs. The waiver application shall demonstrate the infeasibility of other means of alleviating HOV/CAV lane congestion, such as adding an additional HOV/CAV lane, further increasing vehicle occupancy requirements and reducing the use of the lane by noneligible vehicles.

TABLES TO SUBPART C OF PART 88

TABLE C94–1—FLEET CREDIT TABLE BASED ON REDUCTION IN NMOG. VEHICLE EQUIVALENTS FOR LIGHT-DUTY VEHICLES AND LIGHT-DUTY TRUCKS

TABLE C94–1.1—CREDIT GENERATION: PURCHASING MORE CLEAN-FUEL VEHICLES THAN REQUIRED BY THE MANDATE

NMOG	LDV, LDT ≤6000 GVWR, ≤3750 LVW	LDT ≤6000 GVWR, >3750 LVW ≤5750 LVW	LDT >6000 GVWR, ≤3750 ALVW	LDT >6000 GVWR, >3750 ALVW ≤5750 ALVW	LDT >6000 GVWR, >5750 ALVW
LEV	1.00	1.26	0.71	0.91	1.11
ULEV	1.20	1.54	1.00	1.26	1.56
ZEV	1.43	1.83	1.43	1.83	2.23

TABLE C94–1.2—CREDIT GENERATION: PURCHASING A ULEV OR ZEV TO MEET THE MANDATE

NMOG	LDV, LDT ≤6000 GVWR, ≤3750 LVW	LDT 1≤6000 GVWR, >3750 LVW ≤5750 LVW	LDT >6000 GVWR, ≤3750 ALVW	LDT >6000 GVWR, >3750 ALVW, ≤5750 ALVW	LDT >6000 GVWR, >5750 ALVW
LEV	0.00	0.00	0.00	0.00	0.00
ULEV	0.20	0.29	0.29	0.34	0.45
ZEV	0.43	0.57	0.71	0.91	1.11

TABLE C94–1.3—CREDIT NEEDED IN LIEU OF PURCHASING A LEV TO MEET THE MANDATE

NMOG	LDV, LDT ≤6000 GVWR, ≤3750 LVW	LDT ≤6000 GVWR, >3750 LVW ≤5750 LVW	LDT >6000 GVWR, ≤3750 ALVW	LDT >6000 GVWR, >3750 ALVW ≤5750 ALVW	LDT >6000 GVWR, ≤5750 ALVW
LEV	1.00	1.26	0.71	0.91	1.11

TABLE C94–2—FLEET CREDIT TABLE BASED ON REDUCTION IN NMOG+NO_X. VEHICLE EQUIVALENTS FOR LIGHT-DUTY VEHICLES AND LIGHT-DUTY TRUCKS

TABLE C94–2.1—CREDIT GENERATION: PURCHASING MORE CLEAN-FUEL VEHICLES THAN REQUIRED BY THE MANDATE

NMOG+NO_X	LDV, LDT ≤6000 GVWR, ≤3750 LVW	LDT ≤6000 GVWR, >3750 LVW ≤5750 LVW	LDT >6000 GVWR, ≤3750 ALVW	LDT >6000 GVWR, >3750 ALVW ≤5750 ALVW	LDT >6000 GVWR, >5750 ALVW
LEV	1.00	1.39	0.33	0.43	0.52
ULEV	1.09	1.52	1.00	1.39	2.06
ZEV	1.73	2.72	1.73	2.72	3.97

TABLE C94–2.2—CREDIT GENERATION: PURCHASING A ULEV OR ZEV TO MEET THE MANDATE

NMOG+NO_X	LDV, LDT ≤6000 GVWR, ≤3750 LVW	LDT ≤6000 GVWR, >3750 LVW ≤5750 LVW	LDT >6000 GVWR, ≤3750 ALVW	LDT >6000 GVWR, >3750 ALVW ≤5750 ALVW	LDT >6000 GVWR, >5750 ALVW
LEV	0.00	0.00	0.00	0.00	0.00
ULEV	0.09	0.13	0.67	0.96	1.54
ZEV	0.73	1.34	1.40	2.29	3.45

TABLE C94–2.3—CREDIT NEEDED IN LIEU OF PURCHASING A LEV TO MEET THE MANDATE

NMOG+NO_X	LDV, LDT ≤6000 GVWR, ≤3750 LVW	LDT ≤6000 GVWR, >3750 LVW ≤5750 LVW	LDT ≤6000 GVWR, ≤3750 ALVW	LDT >6000 GVWR, >3750 ALVW ≤5750 ALVW	LDT >6000 GVWR, >5750 ALVW
LEV	1.00	1.39	0.33	0.43	0.52

TABLE C94–3—FLEET CREDIT TABLE BASED ON REDUCTION IN CARBON MONOXIDE. VEHICLE EQUIVALENTS FOR LIGHT-DUTY VEHICLES AND LIGHT-DUTY TRUCKS

TABLE C94–3.1—CREDIT GENERATION: PURCHASING MORE CLEAN-FUEL VEHICLES THAN REQUIRED BY THE MANDATE

CO	LDV, LDT ≤6000 GVWR, ≤3750 LVW	LDT ≤6000 GVWR, >3750 LVW ≤5750 LVW	LDT ≤6000 GVWR, ≤3750 ALVW	LDT >6000 GVWR, >3750 ALVW ≤5750 ALVW	LDT >6000 GVWR, >5750 ALVW
LEV	1.00	1.00	1.00	1.00	1.00
ULEV	2.00	2.29	2.00	2.29	2.47
ZEV	3.00	3.59	3.00	3.59	3.94

TABLE C94–3.2—CREDIT GENERATION: PURCHASING A ULEV OR ZEV TO MEET THE MANDATE

CO	LDV, LDT ≤6000 GVWR, ≤3750 LVW	LDT ≤6000 GVWR, >3750 LVW ≤5750 LVW	LDT >6000 GVWR, ≤3750 ALVW	LDT >6000 GVWR, >3750 ALVW ≤5750 ALVW	LDT >6000 GVWR, >5750 ALVW
LEV	0.00	0.00	0.00	0.00	0.00
ULEV	1.00	1.00	1.00	1.00	1.00

TABLE C94–3.2—CREDIT GENERATION: PURCHASING A ULEV OR ZEV TO MEET THE MANDATE—Continued

CO	LDV, LDT ≤6000 GVWR, ≤3750 LVW	LDT ≤6000 GVWR, >3750 LVW ≤5750 LVW	LDT >6000 GVWR, ≤3750 ALVW	LDT >6000 GVWR, >3750 ALVW ≤5750 ALVW	LDT >6000 GVWR, >5750 ALVW
ZEV	2.00	2.29	2.00	2.29	2.47

TABLE C94–3.3—CREDIT NEEDED IN LIEU OF PURCHASING A LEV TO MEET THE MANDATE

CO	LDV, LDT ≤6000 GVWR, ≤3750 LVW	LDT ≤6000 GVWR, >3750 LVW ≤5750 LVW	LDT >6000 GVWR, ≤3750 ALVW	LDT >6000 GVWR, >3750 ALVW ≤5750 ALVW	LDT >6000 GVWR, >5750 ALVW
LEV	1.00	1.00	1.00	1.00	1.00

TABLE C94–4—FLEET CREDIT TABLE BASED ON REDUCTION IN NMHC+NO_X. VEHICLE EQUIVALENTS FOR HEAVY-DUTY VEHICLES—TABLE C94–4.1—CREDIT GENERATION: PURCHASING MORE CLEAN-FUEL VEHICLES THAN REQUIRED BY THE MANDATE

NMHC+NO_X	Light HDV	Medium HDV	Heavy HDV
LEV	1.00	1.00	1.00
ULEV	1.87	1.87	1.87
ZEV	3.53	3.53	3.53

TABLE C94–4.2—CREDIT GENERATION: PURCHASING A ULEV OR ZEV TO MEET THE MANDATE

NMHC+NO_X	Light HDV	Medium HDV
LEV	0.00	0.00
ULEV	0.87	0.87
ZEV	2.53	2.53

TABLE C94–4.3—CREDIT NEEDED IN LIEU OF PURCHASING A LEV TO MEET THE MANDATE

NMHC+NO_X	Light HDV	Medium HDV
LEV	1.00	1.00

TABLE C94–5—FLEET CREDIT TABLE BASED ON REDUCTION IN CO. VEHICLE EQUIVALENTS FOR HEAVY-DUTY VEHICLES—TABLE C94–5.1—CREDIT GENERATION: PURCHASING MORE CLEAN-FUEL VEHICLES THAN REQUIRED BY THE MANDATE

CO	Light HDV	Medium HDV	Heavy HDV
LEV	1.00	1.00	1.00
ULEV	2.00	2.00	2.00
ZEV	3.00	3.00	3.00

TABLE C94–5.2—CREDIT GENERATION: PURCHASING A ULEV OR ZEV TO MEET THE MANDATE

CO	Light HDV	Medium HDV
LEV	0.00	0.00
ULEV	1.00	1.00
ZEV	2.00	2.00

TABLE C94–5.3—CREDIT NEEDED IN LIEU OF PURCHASING A LEV TO MEET THE MANDATE

CO	Light HDV	Medium HDV
LEV	1.00	1.00

[58 FR 11901, Mar. 1, 1993, as amended at 59 FR 50082, Sept. 30, 1994, 61 FR 128, Jan. 3, 1996]

PART 89—CONTROL OF EMISSIONS FROM NEW AND IN-USE NONROAD COMPRESSION-IGNITION ENGINES

Subpart A—General

Sec.
89.1 Applicability.
89.2 Definitions.
89.3 Acronyms and abbreviations.
89.4 [Reserved]
89.5 Table and figure numbering; position.
89.6 Reference materials.
89.7 Treatment of confidential information.
APPENDIX A TO SUBPART A—STATE REGULATION OF NONROAD INTERNAL COMBUSTION ENGINES

Subpart B—Emission Standards and Certification Provisions

89.101 Applicability.
89.102 Effective dates, optional inclusion, flexibility for equipment manufacturers.
89.103 Definitions.
89.104 Useful life, recall, and warranty periods.
89.105 Certificate of conformity.
89.106 Prohibited controls.
89.107 Defeat devices.
89.108 Adjustable parameters, requirements.
89.109 Maintenance instructions and minimum allowable maintenance intervals.
89.110 Emission control information label.
89.111 Averaging, banking, and trading of exhaust emissions.
89.112 Oxides of nitrogen, carbon monoxide, hydrocarbon, and particulate matter exhaust emission standards.
89.113 Smoke emission standard.
89.114 Special and alternate test procedures.
89.115 Application for certificate.
89.116 Engine families.
89.117 Test fleet selection.
89.118 Deterioration factors and service accumulation.
89.119 Emission tests.
89.120 Compliance with emission standards.
89.121 Certificate of conformity effective dates.
89.122 Certification.
89.123 Amending the application and certificate of conformity.
89.124 Record retention, maintenance, and submission.
89.125 Production engines, annual report.
89.126 Denial, revocation of certificate of conformity.
89.127 Request for hearing.
89.128 Hearing procedures.
89.129 Right of entry.
89.130 Rebuild practices.

Subpart C—Averaging, Banking, and Trading Provisions

89.201 Applicability.
89.202 Definitions.
89.203 General provisions.
89.204 Averaging.
89.205 Banking.
89.206 Trading.
89.207 Credit calculation.
89.208 Labeling.
89.209 Certification.
89.210 Maintenance of records.
89.211 End-of-year and final reports.
89.212 Notice of opportunity for hearing.

Subpart D—Emission Test Equipment Provisions

89.301 Scope; applicability.
89.302 Definitions.
89.303 Symbols/abbreviations.
89.304 Equipment required for gaseous emissions; overview.
89.305 Equipment measurement accuracy/calibration frequency.
89.306 Dynamometer specifications and calibration weights.
89.307 Dynamometer calibration.
89.308 Sampling system requirements for gaseous emissions.
89.309 Analyzers required for gaseous emissions.
89.310 Analyzer accuracy and specifications.
89.311 Analyzer calibration frequency.
89.312 Analytical gases.
89.313 Initial calibration of analyzers.
89.314 Pre- and post-test calibration of analyzers.
89.315 Analyzer bench checks.
89.316 Analyzer leakage and response time.
89.317 NO_X converter check.
89.318 Analyzer interference checks.
89.319 Hydrocarbon analyzer calibration.
89.320 Carbon monoxide analyzer calibration.
89.321 Oxides of nitrogen analyzer calibration.
89.322 Carbon dioxide analyzer calibration.
89.323 NDIR analyzer calibration.
89.324 Calibration of other equipment.
89.325 Engine intake air temperature measurement.
89.326 Engine intake air humidity measurement.
89.327 Charge cooling.
89.328 Inlet and exhaust restrictions.
89.329 Engine cooling system.
89.330 Lubricating oil and test fuels.
89.331 Test conditions.
APPENDIX A TO SUBPART D—TABLES
APPENDIX B TO SUBPART D—FIGURES

Subpart E—Exhaust Emission Test Procedures

89.401 Scope; applicability.

89.402 Definitions.
89.403 Symbols/abbreviations.
89.404 Test procedure overview.
89.405 Recorded information.
89.406 Pre-test procedures.
89.407 Engine dynamometer test run.
89.408 Post-test procedures.
89.409 Data logging.
89.410 Engine test cycle.
89.411 Exhaust sample procedure—gaseous components.
89.412 Raw gaseous exhaust sampling and analytical system description.
89.413 Raw sampling procedures.
89.414 Air flow measurement specifications.
89.415 Fuel flow measurement specifications.
89.416 Raw exhaust gas flow.
89.417 Data evaluation for gaseous emissions.
89.418 Raw emission sampling calculations.
89.419 Dilute gaseous exhaust sampling and analytical system description.
89.420 Background sample.
89.421 Exhaust gas analytical system; CVS bag sample.
89.422 Dilute sampling procedures—CVS calibration.
89.423 [Reserved]
89.424 Dilute emission sampling calculations.
89.425 [Reserved]

APPENDIX A TO SUBPART E—FIGURES
APPENDIX B TO SUBPART E—TABLES 1

Subpart F—Selective Enforcement Auditing

89.501 Applicability.
89.502 Definitions.
89.503 Test orders.
89.504 Testing by the Administrator.
89.505 Maintenance of records; submittal of information.
89.506 Right of entry and access.
89.507 Sample selection.
89.508 Test procedures.
89.509 Calculation and reporting of test results.
89.510 Compliance with acceptable quality level and passing and failing criteria for selective enforcement audits.
89.511 Suspension and revocation of certificates of conformity.
89.512 Request for public hearing.
89.513 Administrative procedures for public hearing.
89.514 Hearing procedures.
89.515 Appeal of hearing decision.
89.516 Treatment of confidential information.

APPENDIX A TO SUBPART F—SAMPLING PLANS FOR SELECTIVE ENFORCEMENT AUDITING OF NONROAD ENGINES

Subpart G—Importation of Nonconforming Nonroad Engines

89.601 Applicability.
89.602 Definitions.
89.603 General requirements for importation of nonconforming nonroad engines.
89.604 Conditional admission.
89.605 Final admission of certified nonroad engines.
89.606 Inspection and testing of imported nonroad engines.
89.607 Maintenance of independent commercial importer's records.
89.608 ''In Use'' inspections and recall requirements.
89.609 Final admission of modification nonroad engines and test nonroad engines.
89.610 Maintenance instructions, warranties, emission labeling.
89.611 Exemptions and exclusions.
89.612 Prohibited acts; penalties.
89.613 Treatment of confidential information.

Subpart H—Recall Regulations

89.701 Applicability.
89.702 Definitions.
89.703 Applicability of part 85, subpart S.

Subpart I—Emission Defect Reporting Requirements

89.801 Applicability.
89.802 Definitions.
89.803 Applicability of part 85, subpart T.

Subpart J—Exemption Provisions

89.901 Applicability.
89.902 Definitions.
89.903 Application of section 216(10) of the Act.
89.904 Who may request an exemption.
89.905 Testing exemption.
89.906 Manufacturer-owned exemption and precertification exemption.
89.907 Display exemption.
89.908 National security exemption.
89.909 Export exemptions.
89.910 Granting of exemptions.
89.911 Submission of exemption requests.
89.912 Treatment of confidential information.
89.913 What provisions apply to engines certified under the motor-vehicle program?
89.914 What provisions apply to vehicles certified under the motor-vehicle program?
89.915 Staged-assembly exemption.
89.916 Emergency-vessel exemption for marine engines below 37 kW.

Subpart K—General Enforcement Provisions and Prohibited Acts

89.1001 Applicability.

89.1002 Definitions.
89.1003 Prohibited acts.
89.1004 General enforcement provisions.
89.1005 Injunction proceedings for prohibited acts.
89.1006 Penalties.
89.1007 Warranty provisions.
89.1008 In-use compliance provisions.
89.1009 What special provisions apply to branded engines?

AUTHORITY: 42 U.S.C. 7401–7671q.

SOURCE: 59 FR 31335, June 17, 1994, unless otherwise noted.

Subpart A—General

§ 89.1 Applicability.

(a) This part applies for all compression-ignition nonroad engines (see definition of ''nonroad engine'' in § 89.2) except those specified in paragraph (b) of this section. This means that the engines for which this part applies include but are not limited to the following:

(1) Compression-ignition engines exempted from the requirements of 40 CFR Part 92 by 40 CFR 92.907;

(2) Compression-ignition engines exempted from the requirements of 40 CFR Part 94 by 40 CFR 94.907;

(3) Portable compression-ignition engines that are used in but not installed in marine vessels (as defined in the General Provisions of the United States Code, 1 U.S.C. 3);

(4) Non-propulsion compression-ignition engines used in locomotives; and

(5) Compression-ignition marine engines with rated power under 37 kW.

(b) (1) *Aircraft engines*. This part does not apply for engines used in aircraft (as defined in 40 CFR 87.1).

(2) *Mining engines*. This part does not apply for engines used in underground mining equipment and regulated by the Mining Safety and Health Administration (MSHA) in 30 CFR parts 7, 31, 32, 36, 56, 57, 70, and 75.

(3) *Locomotive engines*. This part does not apply for engines that:

(i) Are subject to the standards of 40 CFR part 92; or

(ii) Are exempted from the requirements of 40 CFR part 92 by exemption provisions of 40 CFR part 92 other than those specified in 40 CFR 92.907.

(4) *Marine engines*. This part does not apply for engines that:

(i) Are subject to the standards of 40 CFR part 94;

(ii) Are exempted from the requirements of 40 CFR part 94 by exemption provisions of 40 CFR part 94 other than those specified in 40 CFR 94.907 or 94.912.

(iii) Are marine engines (as defined in 40 CFR part 94) with rated power at or above 37kW that are manufactured in calendar years in which the standards of 40 CFR part 94 are not yet applicable.

(5) *Hobby engines*. This part does not apply for engines installed in reduced-scale models of vehicles that are not capable of transporting a person.

(6) *Tier 4 engines*. This part does not apply to engines that are subject to emission standards under 40 CFR part 1039. See 40 CFR 1039.1 to determine when that part 1039 applies. Note that certain requirements and prohibitions apply to engines built on or after January 1, 2006 if they are installed in stationary applications or in equipment that will be used solely for competition, as described in 40 CFR 1039.1 and 40 CFR 1068.1; those provisions apply instead of the provisions of this part 89.

(c) In certain cases, the regulations in this part 89 apply to engines at or above 250 kW that would otherwise be covered by 40 CFR part 1048. See 40 CFR 1048.620 for provisions related to this allowance.

(d) This part applies as specified in 40 CFR part 60 subpart IIII, to compression-ignition engines subject to the standards of 40 CFR part 60, subpart IIII.

[64 FR 73330, Dec. 29, 1999, as amended at 69 FR 39212, June 29, 2004; 70 FR 40444, July 13, 2005; 71 FR 39184, July 11, 2006; 72 FR 53126, Sept. 18, 2007; 74 FR 8423, Feb. 24, 2009]

§ 89.2 Definitions.

The following definitions apply to part 89. All terms not defined herein have the meaning given them in the Act.

Act means the Clean Air Act, as amended, 42 U.S.C. 7401 *et seq*.

Adjustable parameter means any device, system, or element of design which is physically capable of being adjusted (including those which are difficult to access) and which, if adjusted,

may affect emissions or engine performance during emission testing.

Administrator means the Administrator of the Environmental Protection Agency or his or her authorized representative.

Aircraft means any vehicle capable of sustained air travel above treetop heights.

Amphibious vehicle means a vehicle with wheels or tracks that is designed primarily for operation on land and secondarily for operation in water.

Auxiliary emission control device (AECD) means any element of design that senses temperature, vehicle speed, engine RPM, transmission gear, or any other parameter for the purpose of activating, modulating, delaying, or deactivating the operation of any part of the emission control system.

Auxiliary marine diesel engine means a marine diesel engine that is not a propulsion marine diesel engine.

Blue Sky Series engine means a nonroad engine meeting the requirements of § 89.112(f).

Certification means, with respect to new nonroad engines, obtaining a certificate of conformity for an engine family complying with the nonroad engine emission standards and requirements specified in this part.

Compression-ignition means relating to a type of reciprocating, internal-combustion engine that is not a spark-ignition engine.

Constant-speed engine means an engine that is governed to operate only at rated speed.

Crankcase emissions means airborne substances emitted to the atmosphere from any portion of the engine crankcase ventilation or lubrication systems.

Designated Enforcement Officer means the Director, Air Enforcement Division (2242A), U.S. Environmental Protection Agency, 1200 Pennsylvania Ave., NW.,Washington, DC 20460.

Emission control system means any device, system, or element of design which controls or reduces the emission of substances from an engine.

Engine, as used in this part, refers to nonroad engine.

Engine manufacturer means any person engaged in the manufacturing or assembling of new nonroad engines or importing such engines for resale, or who acts for and is under the control of any such person in connection with the distribution of such engines. Engine manufacturer does not include any dealer with respect to new nonroad engines received by such person in commerce.

Engine used in a locomotive means either an engine placed in the locomotive to move other equipment, freight, or passenger traffic, or an engine mounted on the locomotive to provide auxiliary power.

EPA enforcement officer means any officer or employee of the Environmental Protection Agency so designated in writing by the Administrator (or by his or her designee).

Exhaust gas recirculation means an emission control technology that reduces emissions by routing exhaust gases that had been exhausted from the combustion chamber(s) back into the engine to be mixed with incoming air prior to or during combustion. The use of valve timing to increase the amount of residual exhaust gas in the combustion chamber(s) that is mixed with incoming air prior to or during combustion is not considered to be exhaust gas recirculation for the purposes of this part.

Family emission limit (FEL) means an emission level that is declared by the manufacturer to serve in lieu of an emission standard for certification purposes and for the averaging, banking, and trading program. A FEL must be expressed to the same number of decimal places as the applicable emission standard.

Full load governed speed is the maximum full load speed as specified by the manufacturer in the sales and service literature and certification application. This speed is the highest engine speed with an advertised power greater than zero.

Gross power means the power measured at the crankshaft or its equivalent, the engine being equipped only with the standard accessories (such as oil pumps, coolant pumps, and so forth) necessary for its operation on the test bed. Alternators must be used, if necessary, to run the engine. Fans, air conditioners, and other accessories may be used at the discretion of the

manufacturer, but no power adjustments for these accessories may be made.

Identification number means a specification (for example, model number/serial number combination) which allows a particular nonroad engine to be distinguished from other similar engines.

Intermediate speed means peak torque speed if peak torque speed occurs from 60 to 75 percent of rated speed. If peak torque speed is less than 60 percent of rated speed, intermediate speed means 60 percent of rated speed. If peak torque speed is greater than 75 percent of rated speed, intermediate speed means 75 percent of rated speed.

Marine engine means a nonroad engine that is installed or intended to be installed on a marine vessel. This includes a portable auxiliary marine engine only if its fueling, cooling, or exhaust system is an integral part of the vessel. There are two kinds of marine engines:

(1) Propulsion marine engine means a marine engine that moves a vessel through the water or directs the vessel's movement.

(2) Auxiliary marine engine means a marine engine not used for propulsion.

Marine vessel has the meaning given in 1 U.S.C. 3, except that it does not include amphibious vehicles. The definition in 1 U.S.C. 3 very broadly includes every craft capable of being used as a means of transportation on water.

Model year (MY) means the manufacturer's annual new model production period which includes January 1 of the calendar year, ends no later than December 31 of the calendar year, and does not begin earlier than January 2 of the previous calendar year. Where a manufacturer has no annual new model production period, model year means calendar year.

New for purposes of this part, means a nonroad engine, nonroad vehicle, or nonroad equipment the equitable or legal title to which has never been transferred to an ultimate purchaser. Where the equitable or legal title to the engine, vehicle, or equipment is not transferred to an ultimate purchaser until after the engine, vehicle, or equipment is placed into service, then the engine, vehicle, or equipment will no longer be new after it is placed into service. A nonroad engine, vehicle, or equipment is placed into service when it is used for its functional purposes. With respect to imported nonroad engines, nonroad vehicles, or nonroad equipment, the term *new* means an engine, vehicle, or piece of equipment that is not covered by a certificate of conformity issued under this part at the time of importation, and that is manufactured after the effective date of a regulation issued under this part which is applicable to such engine, vehicle, or equipment (or which would be applicable to such engine, vehicle, or equipment had it been manufactured for importation into the United States).

Nonroad engine means:

(1) Except as discussed in paragraph (2) of this definition, a nonroad engine is any internal combustion engine:

(i) In or on a piece of equipment that is self-propelled or serves a dual purpose by both propelling itself and performing another function (such as garden tractors, off-highway mobile cranes and bulldozers); or

(ii) In or on a piece of equipment that is intended to be propelled while performing its function (such as lawnmowers and string trimmers); or

(iii) That, by itself or in or on a piece of equipment, is portable or transportable, meaning designed to be and capable of being carried or moved from one location to another. Indicia of transportability include, but are not limited to, wheels, skids, carrying handles, dolly, trailer, or platform.

(2) An internal combustion engine is not a nonroad engine if:

(i) the engine is used to propel a motor vehicle or a vehicle used solely for competition, or is subject to standards promulgated under section 202 of the Act; or

(ii) the engine is regulated by a federal New Source Performance Standard promulgated under section 111 of the Act; or

(iii) the engine otherwise included in paragraph (1)(iii) of this definition remains or will remain at a location for more than 12 consecutive months or a shorter period of time for an engine located at a seasonal source. A location

is any single site at a building, structure, facility, or installation. Any engine (or engines) that replaces an engine at a location and that is intended to perform the same or similar function as the engine replaced will be included in calculating the consecutive time period. An engine located at a seasonal source is an engine that remains at a seasonal source during the full annual operating period of the seasonal source. A seasonal source is a stationary source that remains in a single location on a permanent basis (i.e., at least two years) and that operates at that single location approximately three months (or more) each year. This paragraph does not apply to an engine after the engine is removed from the location.

Nonroad equipment means equipment that is powered by nonroad engines.

Nonroad vehicle means a vehicle that is powered by a nonroad engine as defined in this section and that is not a motor vehicle or a vehicle used solely for competition.

Nonroad vehicle or nonroad equipment manufacturer means any person engaged in the manufacturing or assembling of new nonroad vehicles or equipment or importing such vehicles or equipment for resale, or who acts for and is under the control of any such person in connection with the distribution of such vehicles or equipment. A nonroad vehicle or equipment manufacturer does not include any dealer with respect to new nonroad vehicles or equipment received by such person in commerce. A nonroad vehicle or equipment manufacturer does not include any person engaged in the manufacturing or assembling of new nonroad vehicles or equipment who does not install an engine as part of that manufacturing or assembling process. All nonroad vehicle or equipment manufacturing entities that are under the control of the same person are considered to be a single nonroad vehicle or nonroad equipment manufacturer.

Opacity means the fraction of a beam of light, expressed in percent, which fails to penetrate a plume of smoke.

Operating hours means:

(1) For engine storage areas or facilities, all times during which personnel other than custodial personnel are at work in the vicinity of the storage area or facility and have access to it.

(2) For all other areas or facilities, all times during which an assembly line is in operation or all times during which testing, maintenance, service accumulation, production or compilation of records, or any other procedure or activity related to certification testing, to translation of designs from the test stage to the production stage, or to engine manufacture or assembly is being carried out in a facility.

Post-manufacture marinizer means a person who produces a marine diesel engine by substantially modifying a certified or uncertified complete or partially complete engine, and is not controlled by the manufacturer of the base engine or by an entity that also controls the manufacturer of the base engine. For the purpose of this definition, ''substantially modify'' means changing an engine in a way that could change engine emission characteristics.

Presentation of credentials means the display of the document designating a person as an EPA enforcement officer or EPA authorized representative.

Propulsion marine diesel engine means a marine diesel engine that is intended to move a vessel through the water or direct the movement of a vessel.

Rated speed is the maximum full load governed speed for governed engines and the speed of maximum horsepower for ungoverned engines.

Spark-ignition means relating to a gasoline-fueled engine or other engines with a spark plug (or other sparking device) and with operating characteristics significantly similar to the theoretical Otto combustion cycle. Spark-ignition engines usually use a throttle to regulate intake air flow to control power during normal operation.

Specific emissions means emissions expressed on the basis of observed brake power, using units of g/kW-hr. Observed brake power measurement includes accessories on the engine if these accessories are required for running an emission test (except for the cooling fan). When it is not possible to test the engine in the gross conditions, for example, if the engine and transmission form a single integral unit, the engine may be tested in the net condition.

Power corrections from net to gross conditions will be allowed with prior approval of the Administrator.

Sulfur-sensitive technology means an emission-control technology that experiences a significant drop in emission-control performance or emission-system durability when an engine is operated on low-sulfur fuel (*i.e.*, fuel with a sulfur concentration up to 500 ppm) as compared to when it is operated on ultra low-sulfur fuel (*i.e.*, fuel with a sulfur concentration less than 15 ppm). Exhaust-gas recirculation is not a sulfur-sensitive technology.

Test fleet means the engine or group of engines that a manufacturer uses during certification to determine compliance with emission standards.

Tier 1 engine means an engine subject to the Tier 1 emission standards listed in §89.112(a).

Tier 2 engine means an engine subject to the Tier 2 emission standards listed in §89.112(a).

Tier 3 engine means an engine subject to the Tier 3 emission standards listed in §89.112(a).

Ultimate purchaser means, with respect to any new nonroad engine, new nonroad vehicle, or new nonroad equipment, the first person who in good faith purchases such new nonroad engine, nonroad vehicle, or nonroad equipment for purposes other than resale.

United States means the States, the District of Columbia, the Commonwealth of Puerto Rico, the Commonwealth of the Northern Mariana Islands, Guam, American Samoa, and the U.S. Virgin Islands.

Used solely for competition means exhibiting features that are not easily removed and that would render its use other than in competition unsafe, impractical, or highly unlikely.

U.S.-directed production volume means the number of nonroad equipment, vehicle, or marine diesel engine units produced by a manufacturer for which the manufacturer has reasonable assurance that sale was or will be made to ultimate purchasers in the United States.

[59 FR 31335, June 17, 1994, as amended at 61 FR 52102, Oct. 4, 1996; 63 FR 18998, Apr. 16, 1998; 63 FR 56996, Oct. 23, 1998; 65 FR 73331, Dec. 29, 1999; 67 FR 68339, Nov. 8, 2002; 69 FR 39212, June 29, 2004; 70 FR 40444, July 13, 2005; 72 FR 53126, Sept. 18, 2007]

§89.3 Acronyms and abbreviations.

The following acronyms and abbreviations apply to part 89.

AECD Auxiliary emission control device
ASME American Society of Mechanical Engineers
ASTM American Society for Testing and Materials
CAA Clean Air Act
CAAA Clean Air Act Amendments of 1990
CI Compression-ignition
CO Carbon monoxide
CO_2 Carbon dioxide
EGR Exhaust gas recirculation
EPA Environmental Protection Agency
FEL Family emission limit
FTP Federal Test Procedure
g/kW-hr Grams per kilowatt hour
HC Hydrocarbons
ICI Independent Commercial Importer
kW Kilowatt
NIST National Institute for Standards and Testing
NMHC Nonmethane hydrocarbon
NTIS National Technical Information Service
NO Nitric oxide
NO_2 Nitrogen dioxide
NO_X Oxides of nitrogen
O_2 Oxygen
OEM Original equipment manufacturer
PM Particulate matter
SAE Society of Automotive Engineers
SEA Selective Enforcement Auditing
SI Spark-ignition
THC Total hydrocarbon
U.S.C. United States Code
VOC Volatile organic compounds

[59 FR 31335, June 17, 1994, as amended at 63 FR 56997, Oct. 23, 1998]

§89.4 [Reserved]

§89.5 Table and figure numbering; position.

(a) Tables for each subpart appear in an appendix at the end of the subpart. Tables are numbered consecutively by order of appearance in the appendix. The table title will indicate the model year (if applicable) and the topic.

(b) Figures for each subpart appear in an appendix at the end of the subpart. Figures are numbered consecutively by

order of appearance in the appendix. The figure title will indicate the model year (if applicable) and the topic.

§ 89.6 Reference materials.

(a) *Incorporation by reference.* The documents in paragraph (b) of this section have been incorporated by reference. The incorporation by reference was approved by the Director of the Federal Register in accordance with 5 U.S.C. 552(a) and 1 CFR part 51. Copies may be inspected at US EPA, OAR, 1200 Pennsylvania Ave., NW., Washington, DC 20460, or at the National Archives and Records Administration (NARA). For information on the availability of this material at NARA, call 202–741–6030, or go to: *http://www.archives.gov/federal_register/code_of_federal_regulations/ibr_locations.html.*

(b) The following paragraphs and tables set forth the material that has been incorporated by reference in this part.

(1) *ASTM material.* The following table sets forth material from the American Society for Testing and Materials which has been incorporated by reference. The first column lists the number and name of the material. The second column lists the section(s) of this part, other than § 89.6, in which the matter is referenced. The second column is presented for information only and may not be all inclusive. Copies of these materials may be obtained from American Society for Testing and Materials, 100 Barr Harbor Drive, West Conshohocken, PA 19428–2959.

Document number and name	40 CFR part 89 reference
ASTM D86–97:	
"Standard Test Method for Distillation of Petroleum Products at Atmospheric Pressure" ...	Appendix A to Subpart D.
ASTM D93–97:	
"Standard Test Methods for Flash Point by Pensky-Martens Closed Cup Tester"	Appendix A to Subpart D.
ASTM D129–95:	
"Standard Test Method for Sulfur in Petroleum Products (General Bomb Method)"	Appendix A to Subpart D.
ASTM D287–92:	
"Standard Test Method for API Gravity of Crude Petroleum and Petroleum Products" (Hydrometer Method).	Appendix A to Subpart D
ASTM D445–97:	
"Standard Test Method for Kinematic Viscosity of Transparent and Opaque Liquids (the Calculation of Dynamic Viscosity)".	Appendix A to Subpart D.
ASTM D613–95:	
"Standard Test Method for Cetane Number of Diesel Fuel Oil"	Appendix A to Subpart D.
ASTM D1319–98:	
"Standard Test Method for Hydrocarbon Types in Liquid Petroleum Products by Fluorescent Indicator Adsorption".	Appendix A to Subpart D.
ASTM D2622–98:	
"Standard Test Method for Sulfur in Petroleum Products by Wavelength Dispersive X-ray Fluorescence Spectrometry".	Appendix A to Subpart D.
ASTM D5186–96:	
"Standard Test Method for "Determination of the Aromatic Content and Polynuclear Aromatic Content of Diesel Fuels and Aviation Tubine Fuels By Supercritical Fluid Chromatography".	Appendix A to Subpart D.
ASTM E29–93a:	
"Standard Practice for Using Significant Digits in Test Data to Determine Conformance with Specifications".	89.120; 89.207; 89.509.

(2) *SAE material.* The following table sets forth material from the Society of Automotive Engineers which has been incorporated by reference. The first column lists the number and name of the material. The second column lists the section(s) of this part, other than § 89.6, in which the matter is referenced. The second column is presented for information only and may not be all inclusive. Copies of these materials may be obtained from Society of Automotive Engineers International, 400 Commonwealth Dr., Warrendale, PA 15096–0001.

Document number and name	40 CFR part 89 reference
SAE J244 June 83:	

Document number and name	40 CFR part 89 reference
Recommended Practice for Measurement of Intake Air or Exhaust Gas Flow of Diesel Engines	89.416–96
SAE J1937 November 89:	
Recommended Practice for Engine Testing with Low Temperature Charge Air Cooler Systems in a Dynamometer Test Cell	89.327–96
SAE Paper 770141:	
Optimization of a Flame Ionization Detector for Determination of Hydrocarbon in Diluted Automotive Exhausts, Glenn D. Reschke	89.319–96

(3) *California Air Resources Board Test Procedure*. The following table sets forth material from the Title 13, California Code of Regulations, Sections 2420–2427, as amended by California Air Resources Board Resolution 92–2 and published in California Air Resources Board mail out #93–42, September 1, 1993) which has been incorporated by reference. The first column lists the number and name of the material. The second column lists the section(s) of this part, other than § 89.6, in which the matter is referenced. The second column is presented for information only and may not be all inclusive. Copies of these materials may be obtained from California Air Resources Board, Haagen-Smit Laboratory, 9528 Telstar Avenue, El Monte, CA 91731–2990.

Document number and name	40 CFR part 89 reference
California Regulations for New 1996 and Later Heavy-Duty Off-Road Diesel Cycle Engines	89.112–96 89.119–96 89.508–96

[59 FR 31335, June 17, 1994, as amended at 63 FR 56997, Oct. 23, 1998]

§ 89.7 Treatment of confidential information.

(a) Any manufacturer may assert that some or all of the information submitted pursuant to this part is entitled to confidential treatment as provided by part 2, subpart B of this chapter.

(b) Any claim of confidentiality must accompany the information at the time it is submitted to EPA.

(c) To assert that information submitted pursuant to this part is confidential, a manufacturer must indicate clearly the items of information claimed confidential by marking, circling, bracketing, stamping, or otherwise specifying the confidential information. Furthermore, EPA requests, but does not require, that the submitter also provide a second copy of its submittal from which all confidential information has been deleted. If a need arises to publicly release nonconfidential information, EPA will assume that the submitter has accurately deleted the confidential information from this second copy.

(d) If a claim is made that some or all of the information submitted pursuant to this part is entitled to confidential treatment, the information covered by that confidentiality claim will be disclosed by the Administrator only to the extent and by means of the procedures set forth in part 2, subpart B of this chapter.

(e) Information provided without a claim of confidentiality at the time of submission may be made available to the public by EPA without further notice to the submitter, in accordance with § 2.204(c)(2)(i)(A) of this chapter.

APPENDIX A TO SUBPART A OF PART 89—STATE REGULATION OF NONROAD INTERNAL COMBUSTION ENGINES

This appendix sets forth the Environmental Protection Agency's (EPA's) interpretation of the Clean Air Act regarding the authority of states to regulate the use and operation of nonroad engines.

EPA believes that states are not precluded under section 209 from regulating the use and operation of nonroad engines, such as regulations on hours of usage, daily mass emission limits, or sulfur limits on fuel; nor

are permits regulating such operations precluded, once the engine is no longer new. EPA believes that states are precluded from requiring retrofitting of used nonroad engines except that states are permitted to adopt and enforce any such retrofitting requirements identical to California requirements which have been authorized by EPA under section 209 of the Clean Air Act.

[62 FR 67736, Dec. 30, 1997]

Subpart B—Emission Standards and Certification Provisions

§ 89.101 Applicability.

(a) The requirements of subpart B of this part are applicable to all new nonroad compression-ignition engines subject to the provisions of subpart A of this part 89, pursuant to the schedule delineated in § 89.102.

(b) In a given model year, you may ask us to approve the use of procedures for certification, labeling, reporting, and recordkeeping specified in 40 CFR part 1039 or 1068 instead of the comparable procedures specified in this part 89. We will approve the request as long as it does not prevent us from ensuring that you fully comply with the intent of this part.

[72 FR 53127, Sept. 18, 2007]

§ 89.102 Effective dates, optional inclusion, flexibility for equipment manufacturers.

(a) This subpart applies to all engines described in § 89.101 with the following power rating and manufactured after the following dates:

(1) Less than 19 kW and manufactured on or after January 1, 2000;

(2) Greater than or equal to 19 kW but less than 37 kW and manufactured on or after January 1, 1999;

(3) Greater than or equal to 37 kW but less than 75 kW and manufactured on or after January 1, 1998;

(4) Greater than or equal to 75 kW but less than 130 kW and manufactured on or after January 1, 1997;

(5) Greater than or equal to 130 kW but less than or equal to 560 kW and manufactured on or after January 1, 1996;

(6) Greater than 560 kW and manufactured on or after January 1, 2000.

(b) A manufacturer can optionally certify engines manufactured up to one calendar year prior to the effective date of mandatory certification to earn emission credits under the averaging, banking, and trading program. Such optionally certified engines are subject to all provisions relating to mandatory certification and enforcement described in this part.

(c) Engines meeting the voluntary standards described in § 89.112(f) may be designated as Blue Sky Series engines through the 2004 model year.

(d) *Implementation flexibility for equipment and vehicle manufacturers and post-manufacture marinizers.* Nonroad equipment and vehicle manufacturers and post-manufacture marinizers may take any of the otherwise prohibited actions identified in § 89.1003(a)(1) and (b)(4) with respect to nonroad equipment and vehicles and marine diesel engines, subject to the requirements of paragraph (e) of this section. The following allowances apply separately to each engine power category subject to standards under § 89.112:

(1) *Percent-of-production allowances.* (i) *Equipment rated at or above 37 kW.* For nonroad equipment and vehicles with engines rated at or above 37 kW, a manufacturer may take any of the actions identified in § 89.1003(a)(1) for a portion of its U.S.-directed production volume of such equipment and vehicles during the seven years immediately following the date on which Tier 2 engine standards first apply to engines used in such equipment and vehicles, provided that the seven-year sum of these portions in each year, as expressed as a percentage for each year, does not exceed 80, and provided that all such equipment and vehicles or equipment contain Tier 1 or Tier 2 engines;

(ii) *Equipment rated under 37 kW.* For nonroad equipment and vehicles and marine diesel engines with engines rated under 37 kW, a manufacturer may take any of the actions identified in § 89.1003(a)(1) for a portion of its U.S.-directed production volume of such equipment and vehicles during the seven years immediately following the date on which Tier 1 engine standards first apply to engines used in such equipment and vehicles, provided that the seven-year sum of these portions in

each year, as expressed as a percentage for each year, does not exceed 80.

(2) *Small volume allowances.* A nonroad equipment or vehicle manufacturer or post-manufacture marinizer may exceed the production percentages in paragraph (d)(1) of this section, provided that in each regulated power category the manufacturer's total of excepted nonroad equipment and vehicles and marine diesel engines:

(i) Over the years in which the percent-of-production allowance applies does not exceed 100 units times the number of years in which the percent-of-production allowance applies; and

(ii) Does not exceed 200 units in any year; and

(iii) Does not use engines from more than one engine family, or, for excepted equipment vehicles, and marine diesel engines using engines not belonging to any engine family, from more than one engine manufacturer. For purposes of this paragraph (d)(2)(iii), engine family refers to engines that have common characteristics as described in § 89.116.

(3) *Inclusion of previous-tier engines.* Nonroad equipment and vehicles and marine diesel engines built with previous tier or noncertified engines under the existing inventory provisions of § 89.1003(b)(4) need not be included in determining compliance with paragraphs (d)(1) and (d)(2) of this section.

(e) *Recordkeeping and calculation to verify compliance.* The following shall apply to nonroad equipment or vehicle manufacturers and post-manufacture marinizers who produce excepted equipment or vehicles or marine diesel engines under the provisions of paragraph (d) of this section:

(1) For each power category in which excepted nonroad equipment or vehicles or marine diesel engines are produced, a calculation to verify compliance with the requirements of paragraph (d) of this section shall be made by the nonroad equipment or vehicle manufacturer or post-manufacture marinizer. This calculation shall be made no later than December 31 of the year following the last year in which allowances are used, and shall be based on actual production information from the subject years. If both the percent-of-production and small volume allowances have been exceeded, then the manufacturer is in violation of section 203 of the Act and § 89.1003, except as provided under paragraphs (f) and (h) of this section.

(2) A nonroad equipment or vehicle manufacturer or post-manufacture marinizer shall keep records of all nonroad equipment and vehicles and marine diesel engines excepted under the provisions of paragraph (d) of this section, for each power category in which exceptions are taken. These records shall include equipment and engine model numbers, serial numbers, and dates of manufacture, and engine rated power. In addition, the manufacturer shall keep records sufficient to demonstrate the verifications of compliance required in paragraph (e)(1) of this section. All records shall be kept until at least two full years after the final year in which allowances are available for each power category, and shall be made available to EPA upon request.

(f) *Hardship relief.* Nonroad equipment and vehicle manufacturers and post-manufacture marinizers may take any of the otherwise prohibited actions identified in § 89.1003(a)(1) if approved by the Administrator, and subject to the following requirements:

(1) Application for relief must be submitted to the Engine Programs and Compliance Division of the EPA in writing prior to the earliest date in which the applying manufacturer would be in violation of § 89.1003. The manufacturer must submit evidence showing that the requirements for approval have been met.

(2) The applying manufacturer must not be the manufacturer of the engines used in the equipment for which relief is sought. This requirement does not apply to post-manufacture marinizers.

(3) The conditions causing the impending violation must not be substantially the fault of the applying manufacturer.

(4) The conditions causing the impending violation must be such that the applying manufacturer will experience serious economic hardship if relief is not granted.

(5) The applying manufacturer must demonstrate that no allowances under paragraph (d) of this section will be

available to avoid the impending violation.

(6) Any relief granted must begin within one year after the implementation date of the standard applying to the engines being used in the equipment, or to the marine diesel engines, for which relief is requested, and may not exceed one year in duration.

(7) The Administrator may impose other conditions on the granting of relief including provisions to recover the lost environmental benefit.

(g) *Allowance for the production of engines.* Engine manufacturers may take any of the otherwise prohibited actions identified in § 89.1003(a)(1) with regard to uncertified engines, Tier 1 engines, or Tier 2 engines, as appropriate, if the engine manufacturer has received written assurance from the equipment manufacturer that the engine is required to meet the demand for engines created under paragraph (d), (f), or (h) of this section.

(h) *Alternative Flexibility for Post-Manufacture Marinizers.* Post-manufacture marinizers may elect to delay the effective date of the Tier 1 standards in § 89.112 for marine diesel engines rated under 37 kW by one year, instead of using the provisions of paragraphs (d) and (f) of this section. Post-manufacture marinizers wishing to take advantage of this provision must inform the Director of the Engine Programs and Compliance Division of their intent to do so in writing before the date that the standards would otherwise take effect.

(i) *Additional exemptions for technical or engineering hardship.* You may request additional engine allowances under paragraph (d)(1) of this section for 56–560 kW power categories or, if you are a small equipment manufacturer, under paragraph (d)(2) of this section for engines at or above 37 and below 75 kW. However, you may use these extra allowances only for those equipment models for which you, or an affiliated company, do not also produce the engine. After considering the circumstances, we may permit you to introduce into U.S. commerce equipment with such engines that do not comply with Tier 3 emission standards, as follows:

(1) We may approve additional exemptions if extreme and unusual circumstances that are clearly outside your control and that could not have been avoided with reasonable discretion have resulted in technical or engineering problems that prevent you from meeting the requirements of this part. You must show that you exercised prudent planning and have taken all reasonable steps to minimize the scope of your request for additional allowances.

(2) To apply for exemptions under this paragraph (i), send the Designated Compliance Officer and the Designated Enforcement Officer a written request as soon as possible before you are in violation. In your request, include the following information:

(i) Describe your process for designing equipment.

(ii) Describe how you normally work cooperatively or concurrently with your engine supplier to design products.

(iii) Describe the engineering or technical problems causing you to request the exemption and explain why you have not been able to solve them. Describe the extreme and unusual circumstances that led to these problems and explain how they were unavoidable.

(iv) Describe any information or products you received from your engine supplier related to equipment design—such as written specifications, performance data, or prototype engines—and when you received it.

(v) Compare the design processes of the equipment model for which you need additional exemptions and that for other models for which you do not need additional exemptions. Explain the technical differences that justify your request.

(vi) Describe your efforts to find and use other compliant engines, or otherwise explain why none is available.

(vii) Describe the steps you have taken to minimize the scope of your request.

(viii) Include other relevant information. You must give us other relevant information if we ask for it.

(ix) Estimate the increased percent of production you need for each equipment model covered by your request,

as described in paragraph (i)(3) of this section. Estimate the increased number of allowances you need for each equipment model covered by your request, as described in paragraph (i)(4) of this section.

(3) We may approve your request to increase the allowances under paragraph (d)(1) of this section, subject to the following limitations:

(i) The additional allowances will not exceed 50 percent for each power category.

(ii) You must use up the allowances under paragraph (d)(1) of this section before using any additional allowance under this paragraph (i).

(iii) Any allowances we approve under this paragraph (i)(3) expire 24 months after the provisions of this section start for a given power category. You may use these allowances only for the specific equipment models covered by your request.

(4) We may approve your request to increase the allowances for the 37–75 kW power category under paragraph (d)(2) of this section, subject to the following limitations:

(i) You are eligible for additional allowances under this paragraph (i)(4) only if you are a small equipment manufacturer and you do not use the provisions of paragraph (i)(3) of this section to obtain additional allowances for the 37–75 kW power category.

(ii) You must use up all the available allowances for the 37–75 kW power category under paragraph (d)(2) of this section in a given year before using any additional allowances under this paragraph (i)(4).

(iii) Base your request only on equipment you produce with engines at or above 37 kW and below 75 kW. You may use any additional allowances only for equipment you produce with engines at or above 37 kW and below 75 kW.

(iv) Any allowances we approve under this paragraph (i)(4) expire 24 months after the provisions of this section start for this power category. These additional allowances are not subject to the annual limits specified in paragraph (d)(2) of this section. You may use these allowances only for the specific equipment models covered by your request.

(v) The total allowances under paragraph (d)(2) of this section for the 37–75 kW power category will not exceed 700 units. The total allowances under this paragraph (i)(4) follow the requirements under paragraph (d)(2) of this section for the 37–75 kW power category and will not exceed 200 units. Therefore, the total maximum allowances for the 37–75 kW power category will not exceed 900 units.

(5) For purposes of this paragraph (i), small equipment manufacturer means an equipment manufacturer that had annual U.S.-directed production volume of equipment using nonroad diesel engines between 37 and 75 kW of no more than 3,000 units in 2002 and all earlier calendar years, and has 750 or fewer employees (500 or fewer employees for nonroad equipment manufacturers that produce no construction equipment or industrial trucks). For manufacturers owned by a parent company, the production limit applies to the production of the parent company and all its subsidiaries and the employee limit applies to the total number of employees of the parent company and all its subsidiaries.

(6) The following provisions for adjusted flexibilities for Tier 4 engines apply to equipment manufacturers that are granted additional exemptions for technical or engineering hardship:

(i) If you use the additional allowance under this paragraph (i) you shall forfeit percent of production flexibility plus technical or engineering hardship exemptions available for Tier 4 engines in the amounts shown in Table 1 of this section.

(ii) Table 1 of this section shows the percent of production flexibility and technical or engineering hardship exemptions that you must forfeit for Tier 4 engines. The amount of Tier 4 flexibility forfeited by each equipment manufacturer depends on the percent of production flexibility used for Tier 2 engines and the technical or engineering hardship exemptions granted for Tier 3 engines in the proportions shown in Table 1. For example, if you used 45 percent of your production flexibility for Tier 2 engines, you must forfeit 2 percent of your production flexibility for Tier 4 engines for every 1 percent of

technical or engineering hardship flexibility granted for Tier 3 engines. In addition you must also forfeit 1 percent of any technical or engineering hardship exemptions available for Tier 4 engines for every 1 percent technical or engineering hardship exemptions available for Tier 3 engines. If you use the Tier 3 technical or engineering hardship allowances for 5 percent of your equipment in each of two different years, you have used a total allowance of 10 percent. Therefore you must forfeit a total of 20 percent of production flexibility for Tier 4 engines plus 10 percent of any technical or engineering hardship exemptions available for Tier 4 engines.

TABLE 1 OF § 89.102—ADJUSTMENTS TO TIER 4 FLEXIBILITIES

Percent of use Tier 2 production flexibility	Percent of forfeit Tier 4 production flexibility	Percent of forfeit Tier 4 tech./eng. exemption
Greater than 0% and up to 20%	0	1
Greater than 20% and up to 40%	1	1
Greater than 40% and up to 60%	2	1
Greater than 60% and up to 80%	3	1

(iii) Because the Tier 3 and Tier 4 rules have different power category ranges, the availability of technical relief will be further adjusted based on the sales volume by power category. Table 2 of this section shows the applicable power categories for Tier 3 and Tier 4. The Tier 3 power categories of 37kW to 75kW and 75kW to 130kW correspond to the Tier 4 power category of 56kW to 130kW. For the Tier 3 equipment in the 37 to 75kW category, you must only use the sales volume for equipment that uses engines with a rated power greater than 56kW. For example, if you have a Tier 3 piece of equipment that uses a 40 kW engine, the sales of the equipment are counted in the Tier 4 power category of 19kW to 56kW. If you have a Tier 3 piece of equipment that uses a 60kW engine, the sales of the equipment are counted in the Tier 4 power category of 56kW to 130kW. The Tier 3 power categories of 130kW to 225kW, 225kW to 450kW and 450kW to 560kW correspond to the Tier 4 power category of 130kW to 560kW. You will need to sum the sales of the Tier 3 power categories that correspond to the Tier 4 power category during each calendar year in which Tier 3 technical relief is used. The sum of all the Tier 3 units that are produced and exempted by the technical relief divided by the sum of all the Tier 3 units sold in the corresponding Tier 4 power category will determine the percentage of Tier 4 flexibility affected. For example, if you produce 50 units using Tier 3 technical relief in the range of 130kW to 225kW, and you produce 50 units using Tier 3 technical relief in the range of 225 to 450kW, and no units are produced in the 450kW to 560kW range, and your overall sales volume for the power ranges of 130kW to 560kW in Tier 3 is 400 units, the amount of Tier 3 technical relief used is 100/400 or 25 percent. Because you forfeit 1 percent of your Tier 4 technical relief for every 1 percent of Tier 3 technical relief used, then you will lose 25 percent of your Tier 4 technical relief in the 130kW to 560kW power range category. If you used 45 percent of your production flexibility for Tier 2 engines, you must forfeit 2 percent of production flexibility for Tier 4 engines for every 1 percent of Tier 3 technical relief. Therefore, you will forfeit 50 percent of your Tier 4 production allowance in the 130kW to 560kW power range category.

TABLE 2 OF § 89.102—CORRESPONDING TIER 3 AND TIER 4 POWER CATEGORIES

Tier 3 power categories	Tier 4 power categories
37≤kW<75*	19≤kW<56
37≤kW<75**, 75≤kW<130	56≤kW<130
130≤kW<225, 225≤kW<450, 450≤kW<560.	130≤kW≤560

* Applies only to use of engines rated between 37kW and 56kW by small volume equipment manufacturers.

** Includes only equipment that uses engines with a rated power greater than 56kw.

(iv) Manufacturers using allowances under this paragraph (i) must comply with the notification and reporting requirements specified in paragraph (i)(7) of this section.

(7) Notification and reporting. You must notify us of your intent to use the technical relief provisions of this paragraph (i) and send us an annual report to verify that you are not exceeding the allowances, as follows:

(i) Before the first year you intend to use the provisions of this section, send the Designated Compliance Officer and the Designated Enforcement Officer a written notice of your intent, including:

(A) Your company's name and address, and your parent company's name and address, if applicable.

(B) Whom to contact for more information.

(C) The calendar years in which you expect to use the exemption provisions of this section.

(D) The name and address of the company that produces the engines you will be using for the equipment exempted under this section.

(E) Your best estimate of the number of units in each power category you will produce under this section and whether you intend to comply under paragraph (d)(1) or (d)(2) of this section.

(F) The number of units in each power category you have sold in previous calendar years under paragraph (d) of this section.

(ii) For each year that you use the provisions of this section, send the Designated Compliance Officer and the Designated Enforcement Officer a written report by March 31 of the following year. Include in your report the total number of engines you sold in the preceding year for each power category, based on actual U.S.-directed production information. Also identify the percentages of U.S.-directed production that correspond to the number of units in each power category and the cumulative numbers and percentages of units for all the units you have sold under this section for each power category. You may omit the percentage figures if you include in the report a statement that you will not be using the percent-of-production allowances in paragraph (d) of this section.

(8) *Recordkeeping.* Keep the following records of all equipment with exempted engines you produce under this paragraph (i) for at least five full years after the final year in which allowances are available for each power category:

(i) The model number, serial number, and the date of manufacture for each engine and piece of equipment.

(ii) The maximum power of each engine.

(iii) The total number or percentage of equipment with exempted engines, as described in paragraph (d) of this section and all documentation supporting your calculation.

(iv) The notifications and reports we require under paragraph (i)(7) of this section.

(9) *Equipment Labeling.* Any engine produced under this paragraph (i) must meet the labeling requirements of 40 CFR 89.110, but add the following statement instead of the compliance statement in 40 CFR 89.110 (b)(10): THIS ENGINE MEETS U.S. EPA EMISSION STANDARDS UNDER 40 CFR 89.102. SELLING OR INSTALLING THIS ENGINE FOR ANY PURPOSE OTHER THAN FOR THE EQUIPMENT FLEXIBILITY PROVISIONS OF 40 CFR 89.102 MAY BE A VIOLATION OF FEDERAL LAW SUBJECT TO CIVIL PENALTY.

(10) *Enforcement.* Producing more exempted engines or equipment than we allow under this paragraph (i) or installing engines that do not meet the applicable Tier 1 emission standards described in § 89.112 violates the prohibitions in § 89.1003(a)(1). You must give us the records we require under this paragraph (i) if we ask for them (*see* § 89.1003(a)(2)).

[59 FR 31335, June 17, 1994. Redesignated and amended at 63 FR 56995, 56997, Oct. 23, 1998; 70 FR 40444, July 13, 2005; 72 FR 53127, Sept. 18, 2007; 72 FR 72956, Dec. 26, 2007]

§ 89.103 Definitions.

The definitions in subpart A of part 89 apply to this subpart. All terms not defined herein or in subpart A have the meaning given them in the Act.

[59 FR 31335, June 17, 1994. Redesignated at 63 FR 56995, Oct. 23, 1998]

§ 89.104 Useful life, recall, and warranty periods.

(a) The useful life is based on the rated power and rated speed of the engine.

(1) For all engines rated under 19 kW, and for constant speed engines rated under 37 kW with rated speeds greater than or equal to 3,000 rpm, the useful life is a period of 3,000 hours or five years of use, whichever first occurs.

(2) For all other engines rated at or above 19 kW and under 37 kW, the useful life is a period of 5,000 hours or seven years of use, whichever first occurs.

(3) For all engines rated at or above 37 kW, the useful life is a period of 8,000 hours of operation or ten years of use, whichever first occurs.

(b) Engines are subject to recall testing for a period based on the rated power and rated speed of the engines. However, in a recall, engines in the subject class or category would be subject to recall regardless of actual years or hours of operation.

(1) For all engines rated under 19 kW, and for constant speed engines rated under 37 kW with rated speeds greater than or equal to 3,000 rpm, the engines are subject to recall testing for a period of 2,250 hours or four years of use, whichever first occurs.

(2) For all other engines rated at or above 19 kW and under 37 kW, the engines are subject to recall for a period of 3,750 hours or five years of use, whichever first occurs.

(3) For all engines rated at or above 37 kW, the engines are subject to recall for a period of 6,000 hours of operation or seven years of use, whichever first occurs.

(c) The warranty periods for warranties imposed by the Clean Air Act and § 89.1007 for all engines rated under 19 kW, and for constant speed engines rated under 37 kW with rated speeds greater than or equal to 3,000 rpm, are 1,500 hours of operation or two years of use, whichever first occurs. For all other engines, the warranty periods for warranties imposed by the Clean Air Act and § 89.1007 are 3,000 hours of operation or five years of use, whichever first occurs.

(d) Manufacturers may apply to the Administrator for approval for a shorter useful life period for engines that are subject to severe service in seasonal equipment, or are designed specifically for lower useful life hours to match equipment life. Such an application must be made prior to certification.

[59 FR 31335, June 17, 1994. Redesignated and amended at 63 FR 56995, 56998, Oct. 23, 1998]

§ 89.105 Certificate of conformity.

Every manufacturer of a new nonroad compression-ignition engine must obtain a certificate of conformity covering the engine family, as described in § 89.116. The certificate of conformity must be obtained from the Administrator prior to selling, offering for sale, introducing into commerce, or importing into the United States the new nonroad compression-ignition engine for each model year.

[59 FR 31335, June 17, 1994. Redesignated at 63 FR 56995, Oct. 23, 1998]

§ 89.106 Prohibited controls.

(a) An engine may not be equipped with an emission control system for the purpose of complying with emission standards if such system will cause or contribute to an unreasonable risk to public health, welfare, or safety in its operation or function.

(b) You may not design your engines with emission-control devices, systems, or elements of design that cause or contribute to an unreasonable risk to public health, welfare, or safety while operating. For example, this would apply if the engine emits a noxious or toxic substance it would otherwise not emit that contributes to such an unreasonable risk.

[59 FR 31335, June 17, 1994. Redesignated at 63 FR 56995, Oct. 23, 1998; 67 FR 68339, Nov. 8, 2002]

§ 89.107 Defeat devices.

(a) An engine may not be equipped with a defeat device.

(b) For purposes of this section, ''defeat device'' means any device, system, or element of design which senses operation outside normal emission test conditions and reduces emission control effectiveness.

(1) Defeat device includes any auxiliary emission control device (AECD) that reduces the effectiveness of the emission control system under conditions which may reasonably be expected to be encountered in normal operation and use unless such conditions are included in the test procedure.

(2) Defeat device does not include such items which either operate only during engine starting or are necessary to protect the engine (or equipment in

which it is installed) against damage or accident during its operation.

[59 FR 31335, June 17, 1994. Redesignated at 63 FR 56995, Oct. 23, 1998]

§ 89.108 Adjustable parameters, requirements.

(a) Nonroad engines equipped with adjustable parameters must comply with all requirements of this subpart for any adjustment in the physically adjustable range.

(b) An operating parameter is not considered adjustable if it is permanently sealed or otherwise not normally accessible using ordinary tools.

(c) The Administrator may require that adjustable parameters be set to any specification within its adjustable range for certification, selective enforcement audit, or in-use testing to determine compliance with the requirements of this subpart.

(d) For engines that use noncommercial fuels significantly different than the specified test fuel of the same type, the manufacturer may ask to use the parameter-adjustment provisions of 40 CFR 1039.615 instead of those in this section. Engines certified under this paragraph (d) must be in a separate engine family. See 40 CFR 1039.801 for the definition of ''noncommercial fuels''.

[59 FR 31335, June 17, 1994. Redesignated at 63 FR 56995, Oct. 23, 1998, as amended at 72 FR 53129, Sept. 18, 2007]

§ 89.109 Maintenance instructions and minimum allowable maintenance intervals.

(a) The manufacturer must furnish or cause to be furnished to the ultimate purchaser of each new nonroad engine subject to standards under this part written instructions for the maintenance needed to ensure proper functioning of the emission control system. Paragraphs (b) through (h) of this section do not apply to Tier 1 engines with rated power at or above 37 kW.

(b) Maintenance performed on equipment, engines, subsystems or components used to determine exhaust emission deterioration factors is classified as either emission-related or nonemission-related and each of these can be classified as either scheduled or unscheduled. Further, some emission-related maintenance is also classified as critical emission-related maintenance.

(c) This paragraph (c) specifies emission-related scheduled maintenance for purposes of obtaining durability data for nonroad engines. The maintenance intervals specified below are minimum intervals:

(1) All emission-related scheduled maintenance for purposes of obtaining durability data must occur at the same or longer hours of use intervals as those specified in the manufacturer's maintenance instructions furnished to the ultimate purchaser of the engine under paragraph (a) of this section. This maintenance schedule may be updated as necessary throughout the testing of the engine, provided that no maintenance operation is deleted from the maintenance schedule after the operation has been performed on the test equipment or engine.

(2) Any emission-related maintenance which is performed on equipment, engines, subsystems, or components must be technologically necessary to ensure in-use compliance with the emission standards. The manufacturer must submit data which demonstrate to the Administrator that all of the emission-related scheduled maintenance which is to be performed is technologically necessary. Scheduled maintenance must be approved by the Administrator prior to being performed or being included in the maintenance instructions provided to the purchasers under paragraph (a) of this section.

(i) The Administrator may require longer maintenance intervals than those listed in paragraphs (c)(3) and (c)(4) of this section where the listed intervals are not technologically necessary.

(ii) The Administrator may allow manufacturers to specify shorter maintenance intervals than those listed in paragraphs (c)(3) and (c)(4) of this section where technologically necessary for engines rated under 19 kW, or for constant speed engines rated under 37 kW with rated speeds greater than or equal to 3,000 rpm.

(3) The adjustment, cleaning, repair, or replacement of items listed in paragraphs (c)(3)(i) through (c)(3)(iii) of this section shall occur at 1,500 hours of use and at 1,500-hour intervals thereafter.

(i) Exhaust gas recirculation system-related filters and coolers.

(ii) Positive crankcase ventilation valve.

(iii) Fuel injector tips (cleaning only).

(4) The adjustment, cleaning and repair of items in paragraphs (c)(4)(i) through (c)(4)(vii) of this section shall occur at 3,000 hours of use and at 3,000-hour intervals thereafter for nonroad compression-ignition engines rated under 130 kW, or at 4,500-hour intervals thereafter for nonroad compression-ignition engines rated at or above 130 kW.

(i) Fuel injectors.

(ii) Turbocharger.

(iii) Electronic engine control unit and its associated sensors and actuators.

(iv) Particulate trap or trap-oxidizer system (including related components).

(v) Exhaust gas recirculation system (including all related control valves and tubing) except as otherwise provided in paragraph (c)(3)(i) of this section.

(vi) Catalytic convertor.

(vii) Any other add-on emission-related component (i.e., a component whose sole or primary purpose is to reduce emissions or whose failure will significantly degrade emission control and whose function is not integral to the design and performance of the engine).

(d) Scheduled maintenance not related to emissions which is reasonable and technologically necessary (e.g., oil change, oil filter change, fuel filter change, air filter change, cooling system maintenance, adjustment of idle speed, governor, engine bolt torque, valve lash, injector lash, timing, lubrication of the exhaust manifold heat control valve, etc.) may be performed on durability vehicles at the least frequent intervals recommended by the manufacturer to the ultimate purchaser, (e.g., not the intervals recommended for severe service).

(e) Adjustment of engine idle speed on emission data engines may be performed once before the low-hour emission test point. Any other engine, emission control system, or fuel system adjustment, repair, removal, disassembly, cleaning, or replacement on emission data vehicles shall be performed only with advance approval of the Administrator.

(f) Equipment, instruments, or tools may not be used to identify malfunctioning, maladjusted, or defective engine components unless the same or equivalent equipment, instruments, or tools will be available to dealerships and other service outlets and:

(1) Are used in conjunction with scheduled maintenance on such components; or

(2) Are used subsequent to the identification of a vehicle or engine malfunction, as provided in paragraph (e) of this section for emission data engines; or

(3) Specifically authorized by the Administrator.

(g) All test data, maintenance reports, and required engineering reports shall be compiled and provided to the Administrator in accordance with § 89.124.

(h)(1) The components listed in paragraphs (h)(1)(i) through (h)(1)(vi) of this section are defined as critical emission-related components.

(i) Catalytic converter.

(ii) Electronic engine control unit and its associated sensors and actuators.

(iii) Exhaust gas recirculation system (including all related filters, coolers, control valves, and tubing).

(iv) Positive crankcase ventilation valve.

(v) Particulate trap or trap-oxidizer system.

(vi) Any other add-on emission-related component (i.e., a component whose sole or primary purpose is to reduce emissions or whose failure will significantly degrade emission control and whose function is not integral to the design and performance of the engine).

(2) All critical emission-related scheduled maintenance must have a reasonable likelihood of being performed in use. The manufacturer must show the reasonable likelihood of such maintenance being performed in-use. Critical emission-related scheduled maintenance items which satisfy one of the conditions defined in paragraphs

(h)(2)(i) through (h)(2)(vi) of this section will be accepted as having a reasonable likelihood of being performed in use.

(i) Data are presented which establish for the Administrator a connection between emissions and vehicle performance such that as emissions increase due to lack of maintenance, vehicle performance will simultaneously deteriorate to a point unacceptable for typical operation.

(ii) Survey data are submitted which adequately demonstrate to the Administrator with an 80 percent confidence level that 80 percent of such engines already have this critical maintenance item performed in-use at the recommended interval(s).

(iii) A clearly displayed visible signal system approved by the Administrator is installed to alert the equipment operator that maintenance is due. A signal bearing the message ''maintenance needed'' or ''check engine,'' or a similar message approved by the Administrator, shall be actuated at the appropriate usage point or by component failure. This signal must be continuous while the engine is in operation and not be easily eliminated without performance of the required maintenance. Resetting the signal shall be a required step in the maintenance operation. The method for resetting the signal system shall be approved by the Administrator. The system must not be designed to deactivate upon the end of the useful life of the engine or thereafter.

(iv) A manufacturer may desire to demonstrate through a survey that a critical maintenance item is likely to be performed without a visible signal on a maintenance item for which there is no prior in-use experience without the signal. To that end, the manufacturer may in a given model year market up to 200 randomly selected vehicles per critical emission-related maintenance item without such visible signals, and monitor the performance of the critical maintenance item by the owners to show compliance with paragraph (h)(2)(ii) of this section. This option is restricted to two consecutive model years and may not be repeated until any previous survey has been completed. If the critical maintenance involves more than one engine family, the sample will be sales weighted to ensure that it is representative of all the families in question.

(v) The manufacturer provides the maintenance free of charge, and clearly informs the customer that the maintenance is free in the instructions provided under paragraph (a) of this section.

(vi) The manufacturer uses any other method which the Administrator approves as establishing a reasonable likelihood that the critical maintenance will be performed in-use.

(3) Visible signal systems used under paragraph (h)(2)(iii) of this section are considered an element of design of the emission control system. Therefore, disabling, resetting, or otherwise rendering such signals inoperative without also performing the indicated maintenance procedure is a prohibited act.

[63 FR 56999, Oct. 23, 1998]

§ 89.110 Emission control information label.

(a) The manufacturer must affix at the time of manufacture a permanent and legible label identifying each nonroad engine. The label must meet the following requirements:

(1) Be attached in such a manner that it cannot be removed without destroying or defacing the label;

(2) Be durable and readable for the entire engine life;

(3) Be secured to an engine part necessary for normal engine operation and not normally requiring replacement during engine life;

(4) Be written in English; and

(5) Be located so as to be readily visible to the average person after the engine is installed in the equipment. A supplemental label meeting all the requirements of this section may be attached to a location other than the engine, in cases where the required label must be obscured after the engine is installed in the equipment.

(b) The label must contain the following information:

(1) The heading ''Important Engine Information;''

(2) The full corporate name and trademark of the manufacturer; though the label may identify another company and use its trademark instead

of the manufacturer's if the provisions of § 89.1009 are met.

(3) EPA standardized engine family designation;

(4) Engine displacement;

(5) Advertised power;

(6) Engine tuneup specifications and adjustments. These should indicate the proper transmission position during tuneup, and accessories (for example, air conditioner), if any, that should be in operation;

(7) Fuel requirements;

(8) Date of manufacture (month and year). The manufacturer may, in lieu of including the date of manufacture on the engine label, maintain a record of the engine manufacture dates. The manufacturer shall provide the date of manufacture records to the Administrator upon request;

(9) Family emission limits (FELs) if applicable;

(10) The statement: ''This engine conforms to [model year] U.S. EPA regulations large nonroad compression- ignition engines;''

(11) Engines belonging to an engine family that has been certified as a constant-speed engine using the test cycle specified in Table 2 of appendix B to subpart E of this part must contain the statement on the label: ''constant-speed only''; and

(12) Engines meeting the voluntary standards described in § 89.112(f)(1) to be designated as Blue Sky Series engines must contain the statement on the label: ''Blue Sky Series''.

(c) Other information concerning proper maintenance and use or indicating compliance or noncompliance with other standards may be indicated on the label.

(d) Each engine must have a legible unique engine identification number permanently affixed to or engraved on the engine.

[59 FR 31335, June 17, 1994. Redesignated and amended at 63 FR 56995, 57000, Oct. 23, 1998; 70 FR 40444, July 13, 2005]

§ 89.111 Averaging, banking, and trading of exhaust emissions.

Regulations regarding the availability of an averaging, banking, and trading program along with applicable record- keeping requirements are found in subpart C of this part. Participation in the averaging, banking, and trading program is optional.

[59 FR 31335, June 17, 1994. Redesignated at 63 FR 56995, Oct. 23, 1998]

§ 89.112 Oxides of nitrogen, carbon monoxide, hydrocarbon, and particulate matter exhaust emission standards.

(a) Exhaust emission from nonroad engines to which this subpart is applicable shall not exceed the applicable exhaust emission standards contained in Table 1, as follows:

Table 1.—Emission Standards (g/kW-hr)

Rated Power (kW)	Tier	Model Year[1]	NOx	HC	NMHC + NOx	CO	PM
kW<8	Tier 1	2000	—	—	10.5	8.0	1.0
	Tier 2	2005	—	—	7.5	8.0	0.80
8≤kW<19	Tier 1	2000	—	—	9.5	6.6	0.80
	Tier 2	2005	—	—	7.5	6.6	0.80
19≤kW<37	Tier 1	1999	—	—	9.5	5.5	0.80
	Tier 2	2004	—	—	7.5	5.5	0.60
37≤kW<75	Tier 1	1998	9.2	—	—	—	—
	Tier 2	2004	—	—	7.5	5.0	0.40
	Tier 3	2008	—	—	4.7	5.0	
75≤kW<130	Tier 1	1997	9.2	—	—	—	—
	Tier 2	2003	—	—	6.6	5.0	0.30
	Tier 3	2007	—	—	4.0	5.0	
130≤kW<225	Tier 1	1996	9.2	1.3	—	11.4	0.54
	Tier 2	2003	—	—	6.6	3.5	0.20
	Tier 3	2006	—	—	4.0	3.5	
225≤kW<450	Tier 1	1996	9.2	1.3	—	11.4	0.54
	Tier 2	2001	—	—	6.4	3.5	0.20
	Tier 3	2006	—	—	4.0	3.5	
450≤kW≤560	Tier 1	1996	9.2	1.3	—	11.4	0.54
	Tier 2	2002	—	—	6.4	3.5	0.20
	Tier 3	2006	—	—	4.0	3.5	
kW>560	Tier 1	2000	9.2	1.3	—	11.4	0.54
	Tier 2	2006	—	—	6.4	3.5	0.20

[1] The model years listed indicate the model years for which the specified tier of standards take effect.

(b) Exhaust emissions of oxides of nitrogen, carbon monoxide, hydrocarbon, and nonmethane hydrocarbon are measured using the procedures set forth in subpart E of this part.

(c) Exhaust emission of particulate matter is measured using the California Regulations for New 1996 and Later Heavy-Duty Off-Road Diesel Cycle Engines. This procedure is incorporated by reference. See § 89.6.

(d) In lieu of the NO_X standards, NMHC + NO_X standards, and PM standards specified in paragraph (a) of this section, manufacturers may elect to include engine families in the averaging, banking, and trading program, the provisions of which are specified in subpart C of this part. The manufacturer must set a family emission limit (FEL) not to exceed the levels contained in Table 2. The FEL established by the manufacturer serves as the standard for that engine family. Table 2 follows:

Table 2.—Upper Limit for Family Emission Limits (g/kW-hr)

Rated Power (kW)	Tier	Model Year[1]	NOx FEL	NMHC+ NOx FEL	PM FEL
kW<8	Tier 1	2000	—	16.0	1.2
	Tier 2	2005	—	10.5	1.0
8≤kW<19	Tier 1	2000	—	16.0	1.2
	Tier 2	2005	—	9.5	0.80
19≤kW<37	Tier 1	1999	—	16.0	1.2
	Tier 2	2004	—	9.5	0.80
37≤kW<75	Tier 1	1998	14.6	—	—
	Tier 2	2004	—	11.5	1.2
	Tier 3	2008	—	7.5	
75≤kW<130	Tier 1	1997	14.6	—	—
	Tier 2	2003	—	11.5	1.2
	Tier 3	2007	—	6.6	
130≤kW<225	Tier 1	1996	14.6	—	—
	Tier 2	2003	—	10.5	0.54
	Tier 3	2006	—	6.6	
225≤kW<450	Tier 1	1996	14.6	—	—
	Tier 2	2001	—	10.5	0.54
	Tier 3	2006	—	6.4	
450≤kW≤560	Tier 1	1996	14.6	—	—
	Tier 2	2002	—	10.5	0.54
	Tier 3	2006	—	6.4	
kW>560	Tier 1	2000	14.6	—	—
	Tier 2	2006	—	10.5	0.54

[1] The model years listed indicate the model years for which the specified tier of limits take effect.

(e) Naturally aspirated nonroad engines to which this subpart is applicable shall not discharge crankcase emissions into the ambient atmosphere, unless such crankcase emissions are permanently routed into the exhaust and included in all exhaust emission measurements. This provision applies to all

Tier 2 engines and later models. This provision does not apply to engines using turbochargers, pumps, blowers, or superchargers for air induction.

(f) The following paragraphs define the requirements for low-emitting Blue Sky Series engines:

(1) *Voluntary standards.* Engines may be designated ''Blue Sky Series'' engines by meeting the voluntary standards listed in Table 3, which apply to all certification and in-use testing, as follows:

TABLE 3—VOLUNTARY EMISSION STANDARDS (G/KW-HR)

Rated Brake Power (kW)	NMHC+NO_X	PM
kW<8	4.6	0.48
8≤kW<19	4.5	0.48
19≤kW<37	4.5	0.36
37≤kW<75	4.7	0.24
75≤kW<130	4.0	0.18
130≤kW≤560	4.0	0.12
kW>560	3.8	0.12

(2) *Additional standards.* Blue Sky Series engines are subject to all provisions that would otherwise apply under this part, except as specified in paragraph (f)(3) of this section.

(3) *Test procedures.* NO_X, NMHC, and PM emissions are measured using the procedures set forth in 40 CFR part 1065, in lieu of the procedures set forth in subpart E of this part. CO emissions may be measured using the procedures set forth either in 40 CFR part 1065 or in subpart E of this part. Manufacturers may use an alternate procedure to demonstrate the desired level of emission control if approved in advance by the Administrator. Engines meeting the requirements to qualify as Blue Sky Series engines must be capable of maintaining a comparable level of emission control when tested using the procedures set forth in paragraph (c) of this section and subpart E of this part. The numerical emission levels measured using the procedures from subpart E of this part may be up to 20 percent higher than those measured using the procedures from 40 CFR part 1065 and still be considered comparable.

(g) Manufacturers of engines at or above 37 kW and below 56 kW from model years 2008 through 2012 that are subject to the standards of this section under 40 CFR 1039.102 must take the following additional steps:

(1) State the applicable PM standard on the emission control information label.

(2) Add information to the emission-related installation instructions to clarify the equipment manufacturer's obligations under 40 CFR 1039.104(f).

[59 FR 31335, June 17, 1994. Redesignated and amended at 63 FR 56995, 57000, Oct. 23, 1998; 69 FR 39212, June 29, 2004; 70 FR 40444, July 13, 2005]

§ 89.113 Smoke emission standard.

(a) Exhaust opacity from compression-ignition nonroad engines for which this subpart is applicable must not exceed:

(1) 20 percent during the acceleration mode;

(2) 15 percent during the lugging mode; and

(3) 50 percent during the peaks in either the acceleration or lugging modes.

(b) Opacity levels are to be measured and calculated as set forth in 40 CFR part 86, subpart I. Notwithstanding the provisions of 40 CFR part 86, subpart I, two-cylinder nonroad engines may be tested using an exhaust muffler that is representative of exhaust mufflers used with the engines in use.

(c) The following engines are exempt from the requirements of this section:

(1) Single-cylinder engines;

(2) Propulsion marine diesel engines; and

(3) Constant-speed engines.

[59 FR 31335, June 17, 1994. Redesignated and amended at 63 FR 56995, 57003, Oct. 23, 1998]

§ 89.114 Special and alternate test procedures.

(a) *Special test procedures.* The Administrator may, on the basis of written application by a manufacturer, establish special test procedures other than those set forth in this part, for any nonroad engine that the Administrator determines is not susceptible to satisfactory testing under the specified test procedures set forth in subpart E of this part or 40 CFR part 86, subpart I.

(b) *Alternate test procedures.* (1) A manufacturer may elect to use an alternate test procedure provided that it yields equivalent results to the specified procedures, its use is approved in

advance by the Administrator, and the basis for equivalent results with the specified test procedures is fully described in the manufacturer's application.

(2) The Administrator may reject data generated under alternate test procedures which do not correlate with data generated under the specified procedures.

(3) A manufacturer may elect to use the test procedures in 40 CFR part 1065 as an alternate test procedure without advance approval by the Administrator. The manufacturer must identify in its application for certification that the engines were tested using the procedures in 40 CFR part 1065. For any EPA testing with Tier 2 or Tier 3 engines, EPA will use the manufacturer's selected procedures for mapping engines, generating duty cycles, and applying cycle-validation criteria. For any other parameters, EPA may conduct testing using either of the specified procedures.

(4) Where we specify mandatory compliance with the procedures of 40 CFR part 1065, such as in § 89.419, manufacturers may elect to use the procedures specified in 40 CFR part 86, subpart N, as an alternate test procedure without advance approval by the Administrator.

[59 FR 31335, June 17, 1994. Redesignated and amended at 63 FR 56995, 57003, Oct. 23, 1998; 69 FR 39212, June 29, 2004; 70 FR 40445, July 13, 2005]

§ 89.115 Application for certificate.

(a) For each engine family that complies with all applicable standards and requirements, the engine manufacturer must submit to the Administrator a completed application for a certificate of conformity.

(b) The application must be approved and signed by the authorized representative of the manufacturer.

(c) The application will be updated and corrected by amendment as provided for in § 89.123 to accurately reflect the manufacturer's production.

(d) *Required content.* Each application must include the following information:

(1) A description of the basic engine design including, but not limited to, the engine family specifications, the provisions of which are contained in § 89.116;

(2) An explanation of how the emission control system operates, including a detailed description of all emission control system components, each auxiliary emission control device (AECD), and all fuel system components to be installed on any production or test engine(s);

(3) Proposed test fleet selection and the rationale for the test fleet selection;

(4) Special or alternate test procedures, if applicable;

(5) The period of operation necessary to accumulate service hours on test engines and stabilize emission levels;

(6) A description of all adjustable operating parameters (including, but not limited to, injection timing and fuel rate), including the following:

(i) The nominal or recommended setting and the associated production tolerances;

(ii) The intended physically adjustable range;

(iii) The limits or stops used to establish adjustable ranges;

(iv) Production tolerances of the limits or stops used to establish each physically adjustable range; and

(v) Information relating to why the physical limits or stops used to establish the physically adjustable range of each parameter, or any other means used to inhibit adjustment, are effective in preventing adjustment of parameters to settings outside the manufacturer's intended physically adjustable ranges on in-use engines;

(7) For families participating in the averaging, banking, and trading program, the information specified in subpart C of this part;

(8) A description of the test equipment and fuel proposed to be used;

(9) All test data obtained by the manufacturer on each test engine, including CO_2 as specified in § 89.407(d)(1);

(10) An unconditional statement certifying that all engines in the engine family comply with all requirements of this part and the Clean Air Act.

(11) A statement indicating whether the engine family contains only nonroad engines, only stationary engines, or both.

(e) At the Administrator's request, the manufacturer must supply such additional information as may be required to evaluate the application including, but not limited to, projected nonroad engine production.

(f)(1) The Administrator may modify the information submission requirements of paragraph (d) of this section, provided that all of the information specified therein is maintained by the engine manufacturer as required by § 89.124, and amended, updated, or corrected as necessary.

(2) For the purposes of this paragraph, § 89.124(a)(1) includes all information specified in paragraph (d) of this section whether or not such information is actually submitted to the Administrator for any particular model year.

(3) The Administrator may review an engine manufacturer's records at any time. At the Administrator's discretion, this review may take place either at the manufacturer's facility or at another facility designated by the Administrator.

(g) The manufacturer must name an agent for service located in the United States. Service on this agent constitutes service on the manufacturer or any of its officers or employees for any action by EPA or otherwise by the United States related to the requirements of this part.

[59 FR 31335, June 17, 1994, as amended at 61 FR 20741, May 8, 1996. Redesignated at 63 FR 56995, Oct. 23, 1998, as amended at 71 FR 39184, July 11, 2006; 72 FR 53129, Sept. 18, 2007; 74 FR 56374, Oct. 30, 2009]

§ 89.116 Engine families.

(a) A manufacturer's product line is divided into engine families that are comprised of engines expected to have similar emission characteristics throughout their useful life periods.

(b) The following characteristics distinguish engine families:

(1) Fuel;

(2) Cooling medium;

(3) Method of air aspiration;

(4) Method of exhaust aftertreatment (for example, catalytic converter or particulate trap);

(5) Combustion chamber design;

(6) Bore;

(7) Stroke;

(8) Number of cylinders, (engines with aftertreatment devices only); and

(9) Cylinder arrangement (engines with aftertreatment devices only).

(c) Upon a showing by the manufacturer that the useful life period emission characteristics are expected to be similar, engines differing in one or more of the characteristics in paragraph (b) of this section may be grouped in the same engine family.

(d) Upon a showing by the manufacturer that the expected useful life period emission characteristics will be different, engines identical in all the characteristics of paragraph (b) of this section may be divided into separate engine families.

(e)(1) This paragraph (e) applies only to the placement of Tier 1 engines with power ratings under 37 kW into engine families. The provisions of paragraphs (a) through (d) of this section also apply to these engines. The power categories referred to in this paragraph (e) are those for which separate standards or implementation dates are described in § 89.112.

(2) A manufacturer may place engines with power ratings in one power category into an engine family comprised of engines with power ratings in another power category, and consider all engines in the engine family as being in the latter power category for the purpose of determining compliance with the standards and other requirements of this part, subject to approval in advance by the Administrator and the following restrictions:

(i) The engines that have power ratings outside the engine family's power category must constitute less than half of the engine family's sales in each model year for which the engine family grouping is made; and

(ii) The engines that have power ratings outside the engine family's power category must have power ratings that are within ten percent of either of the two power levels that define the engine family's power category.

(3) The restrictions described in paragraphs (e)(2)(i) and (e)(2)(ii) of this section do not apply if the emissions standards and other requirements of this part are at least as stringent for the engine family's power category as those of the other power categories

containing engines in the engine family.

[59 FR 31335, June 17, 1994. Redesignated and amended at 63 FR 56995, 57003, Oct. 23, 1998]

§ 89.117 Test fleet selection.

(a) The manufacturer must select for testing, from each engine family, the engine with the most fuel injected per stroke of an injector, primarily at the speed of maximum torque and secondarily at rated speed.

(b) Each engine in the test fleet must be constructed to be representative of production engines.

(c) After review of the manufacturer's test fleet, the Administrator may select from the available fleet one additional test engine from each engine family.

(d) For establishing deterioration factors, the manufacturer shall select the engines, subsystems, or components to be used to determine exhaust emission deterioration factors for each engine-family control system combination. Engines, subsystems, or components shall be selected so that their emission deterioration characteristics are expected to represent those of in-use engines, based on good engineering judgment.

[59 FR 31335, June 17, 1994. Redesignated and amended at 63 FR 56995, 57003, Oct. 23, 1998]

§ 89.118 Deterioration factors and service accumulation.

This section applies to service accumulation used to determine deterioration factors and service accumulation used to condition test engines. Paragraphs (a) and (b) of this section apply only for service accumulation used to condition test engines. Paragraph (e) of this section applies only for service accumulation used to determine deterioration factors. Paragraphs (c) and (d) of this section apply for all service accumulation required by this part.

(a)(1) Each test engine in the test fleet must be operated with all emission control systems operating properly for a period sufficient to stabilize emissions.

(2) A manufacturer may elect to consider as stabilized emission levels from engines with no more than 125 hours of service.

(b) No maintenance, other than recommended lubrication and filter changes, may be performed during service accumulation without the Administrator's approval.

(c) Service accumulation should be performed in a manner using good engineering judgment to ensure that emissions are representative of in-use engines.

(d) The manufacturer must maintain, and provide to the Administrator if requested, records stating the rationale for selecting the service accumulation period and records describing the method used to accumulate service hours on the test engine(s).

(e) This paragraph (e) describes service accumulation and alternative requirements for the purpose of developing deterioration factor.

(1) *Service accumulation on engines, subsystems, or components selected by the manufacturer under § 89.117(d).* The manufacturer shall describe the form and extent of this service accumulation in the application for certification.

(2) *Determination of exhaust emission deterioration factors.* The manufacturer shall determine the deterioration factors in accordance with the applicable provisions of this part based on service accumulation and related testing, according to the manufacturer's procedures, except as provided in paragraph (e)(3) of this section.

(3) *Alternatives to service accumulation and testing for the determination of a deterioration factor.* A written explanation of the appropriateness of using an alternative must be included in the application for certification.

(i) *Carryover and carryacross of durability emission data.* In lieu of testing an emission data or durability data engine selected under § 89.117(d), a manufacturer may, with Administrator approval, use exhaust emission deterioration data on a similar engine for which certification to the same standard has previously been obtained or for which all applicable data required under § 89.124 has previously been submitted. This data must be submitted in the application for certification.

(ii) *Use of on-highway deterioration data.* In the case where a manufacturer produces a certified on-highway engine that is similar to the nonroad engine

to be certified, deterioration data from the on-highway engine may be applied to the nonroad engine. This application of deterioration data from an on-highway engine to a nonroad engine is subject to Administrator approval, and the determination of whether the engines are similar must be based on good engineering judgment.

(iii) *Engineering analysis for established technologies.* (A) In the case where an engine family uses established technology, an analysis based on good engineering practices may be used in lieu of testing to determine a deterioration factor for that engine family, subject to Administrator approval.

(B) Engines for which the certification levels are not at or below the Tier 3 NMHC+NO_X standards described in § 89.112 are considered established technology, except as provided in paragraph (e)(3)(iii)(D) of this section.

(C) Manufacturers may petition the Administrator to consider an engine with a certification level below the Tier 3 +NO_X standards as established technology. This petition must be based on proof that the technology used is not significantly different than that used on engines that have certification levels that are not below the Tier 3 NMHC+NO_X levels.

(D) Engines using exhaust gas recirculation or aftertreatment are excluded from the provision set forth in paragraphs (e)(3)(iii)(A) through (e)(3)(iii)(C) of this section.

(E) The manufacturer shall provide a written statement to the Administrator that all data, analyses, test procedures, evaluations, and other documents, on which the deterioration factor is based, are available to the Administrator upon request.

(iv) *Interim provision for engines rated under 37 kW.* For model year 1999 and 2000 engines rated under 37 kW, manufacturers may determine deterioration factors based on good engineering judgement and reasonably available information. The manufacturer must maintain and provide to the Administrator, if requested, all information used to determine deterioration factors for these engines.

[59 FR 31335, June 17, 1994. Redesignated and amended at 63 FR 56995, 57003, Oct. 23, 1998]

§ 89.119 Emission tests.

(a) *Manufacturer testing.* (1) Upon completion of service accumulation, the manufacturer must test each test engine using the specified test procedures, except as provided in § 89.114. The procedures to be used are set forth in:

(i) Subpart E of this part;

(ii) The California Regulations for New 1996 and Later Heavy-Duty Off-Road Diesel Cycle Engines. This procedure has been incorporated by reference. See § 89.6; and

(iii) Part 86, subpart I of this chapter.

(2) Each test engine must be configured to be representative of actual in-use operation. The Administrator may specify the adjustment of any adjustable parameter. All test results must be reported to the Administrator.

(b) *Confirmatory testing.* The Administrator may conduct confirmatory testing or other testing on any test engine. The manufacturer must deliver test engines as directed by the Administrator. When the Administrator conducts confirmatory testing or other testing, those test results are used to determine compliance with emission standards.

(c) *Use of carryover test data.* In lieu of testing to certify an engine family for a given model year, the manufacturer may submit, with the Administrator's approval, emission test data used to certify that engine family in previous years. This ''carryover'' data is only allowable if the submitted test data show that the test engine would comply with the emission standard(s) for the model year for which certification is being sought.

(d) The provisions of this paragraph (d) apply only to Tier 1 nonroad engines without exhaust aftertreatment rated at or above 37 kW.

(1) Particulate emission measurements from Tier 1 nonroad engines without exhaust aftertreatment rated at or above 37 kW may be adjusted to a sulfur content of 0.05 weight percent.

(2) Adjustments to the particulate measurement shall be made using the following equation:

$$PM_{adj}=PM-[BSFC \times 0.0917 \times (FSF-0.0005)]$$

Where:

PM_{adj}=adjusted measured PM level [g/Kw-hr].
PM=measured weighted PM level [g/Kw-hr].
BSFC=measured brake specific fuel consumption [G/Kw-hr].
FSF=fuel sulfur weight fraction.

(3) Where a manufacturer certifies using test fuel with a sulfur content less than or equal to 0.050 weight percent, EPA shall not use emission data collected using test fuel with a sulfur content greater than 0.050 weight percent to determine compliance with the Tier 1 PM standards.

(4) Where a manufacturer certifies using test fuel with a sulfur content greater than 0.050 weight percent, EPA shall not use emission data collected using test fuel with a sulfur content greater than 0.050 weight percent to determine compliance with the Tier 1 PM standards, unless EPA adjusts the PM measurement using the equation specified in paragraph (d)(2) of this section.

[59 FR 31335, June 17, 1994. Redesignated and amended at 63 FR 56995, 57004, Oct. 23, 1998]

§ 89.120 Compliance with emission standards.

(a) If all test engines representing an engine family have emissions less than or equal to each emission standard, that family complies with the emission standards.

(b) If any test engine representing an engine family has emissions greater than each emission standard, that family will be deemed not in compliance with the emission standard(s).

(c) For each nonroad engine family, except Tier 1 engine families with rated power at or above 37 kW that do not employ aftertreatment, a deterioration factor must be determined and applied.

(1) The applicable exhaust emission standards (or family emission limits, as appropriate) for nonroad compression-ignition engines apply to the emissions of engines for their useful life.

(2) [Reserved]

(3)(i) This paragraph (c)(3) describes the procedure for determining compliance of an engine with emission standards (or family emission limits, as appropriate), based on deterioration factors supplied by the manufacturer. The NMHC + NO_X deterioration factors shall be established based on the sum of the pollutants, except as provided in paragraph (c)(3)(iv) of this section. When establishing deterioration factors for NMHC + NO_X. a negative deterioration (emissions decrease from the official emissions test result) for one pollutant may not offset deterioration of the other pollutant.

(ii) Separate emission deterioration factors, determined by the manufacturer according to the requirements of § 89.118, shall be provided in the certification application for each engine-system combination. Separate deterioration factors shall be established for each regulated pollutant, except that a combined NMHC + NO_X deterioration factor shall be established for compression-ignition nonroad engines not utilizing aftertreatment technology. For smoke testing, separate deterioration factors shall also be established for the acceleration mode (designated as ''A''), the lugging mode (designated as ''B''), and peak opacity (designated as ''C'').

(iii) *Compression-ignition nonroad engines not utilizing aftertreatment technology (e.g., particulate traps).* For CO, NMHC + NO_X. and particulate, the official exhaust emission results for each emission data engine at the selected test point shall be adjusted by addition of the appropriate deterioration factor. However, if the deterioration factor supplied by the manufacturer is less than zero, it shall be zero for the purposes of this paragraph (c)(3)(iii).

(iv) *Compression-ignition nonroad engines utilizing aftertreatment technology (e.g., particulate traps).* For CO, NMHC + NO_X. and particulate, the official exhaust emission results for each emission data engine at the selected test point shall be adjusted by multiplication by the appropriate deterioration factor. Separate NMHC and NO_X deterioration factors shall be applied to the results for these pollutants prior to combining the results. If the deterioration factor supplied by the manufacturer is less than one, it shall be one for the purposes of this paragraph (c)(3)(iv).

(v) For acceleration smoke (''A''), lugging smoke (''B''), and peak opacity (''C''), the official exhaust emission results for each emission data engine at

the selected test point shall be adjusted by the addition of the appropriate deterioration factor. However if the deterioration supplied by the manufacturer is less than zero, it shall be zero for the purposes of this paragraph (c)(3)(v).

(vi) The emission values to compare with the standards (or family emission limits, as appropriate) shall be the adjusted emission values of paragraphs (c)(3)(iii) through (v) of this section, rounded to the same number of significant figures as contained in the applicable standard in accordance with ASTM E29–93a, for each emission data engine. This procedure has been incorporated by reference at § 89.6.

(4) Every test engine of an engine family must comply with all applicable standards (or family emission limits, as appropriate), as determined in paragraph (c)(3)(vi) of this section, before any engine in that family will be certified.

(d) For engine families included in the averaging, banking, and trading program, the families' emission limits (FELs) are used in lieu of the applicable federal emission standard.

(e) For the purposes of setting an NMHC + NO_X certification level or FEL, one of the following options shall be used for the determination of NMHC for an engine family. The manufacturer must declare which option is used in its application for certification of that engine family.

(1) The manufacturer may assume that up to two percent of the measured THC is methane (NMHC = 0.98 × THC).

(2) The manufacturer may measure NMHC emissions using a method approved by the Administrator prior to the start of testing. This option allows the determination of NMHC emissions by subtracting measured methane emissions from measured THC emissions.

[59 FR 31335, June 17, 1994. Redesignated and amended at 63 FR 56995, 57004, Oct. 23, 1998]

§ 89.121 Certificate of conformity effective dates.

The certificate of conformity is valid from the date of issuance by EPA until 31 December of the model year or calendar year for which it is issued.

[59 FR 31335, June 17, 1994. Redesignated at 63 FR 56995, Oct. 23, 1998]

§ 89.122 Certification.

(a) If, after a review of the manufacturer's application, request for certificate, information obtained from any inspection, and such other information as the Administrator may require, the Administrator determines that the application is complete and that the engine family meets the requirements of this part and the Clean Air Act, the Administrator shall issue a certificate of conformity.

(b) If, after a review of the information described in paragraph (a) of this section, the Administrator determines that the requirements of this part and the Clean Air Act have not been met, the Administrator will deny certification. The Administrator must give a written explanation when certification is denied. The manufacturer may request a hearing on a denial.

[59 FR 31335, June 17, 1994. Redesignated at 63 FR 56995, Oct. 23, 1998]

§ 89.123 Amending the application and certificate of conformity.

(a) The manufacturer of nonroad compression-ignition engines must notify the Administrator when changes to information required to be described in the application for certification are to be made to a product line covered by a certificate of conformity. This notification must include a request to amend the application or the existing certificate of conformity. Except as provided in paragraph (e) of this section, the manufacturer shall not make said changes or produce said engines prior to receiving approval from EPA.

(b) A manufacturer's request to amend the application or the existing certificate of conformity shall include the following information:

(1) A full description of the change to be made in production or of the engine to be added;

(2) Engineering evaluations or data showing that engines as modified or added will comply with all applicable emission standards; and

(3) A determination whether the manufacturer's original test fleet selection is still appropriate, and if the original test fleet selection is determined not to be appropriate, proposed test fleet selection(s) representing the engines changed or added which would have been required if the engines had been included in the original application for certification.

(c) The Administrator may require the manufacturer to perform tests on the engine representing the engine to be added or changed.

(d) *Decision by Administrator*. (1) Based on the description of the proposed amendment and data derived from such testing as the Administrator may require or conduct, the Administrator will determine whether the proposed change or addition would still be covered by the certificate of conformity then in effect.

(2) If the Administrator determines that the change or new engine(s) meets the requirements of this subpart and the Act, the appropriate certificate of conformity is amended.

(3) If the Administrator determines that the changed or new engine(s) does not meet the requirements of this subpart and the Act, the certificate of conformity will not be amended. The Administrator shall provide a written explanation to the manufacturer of the decision not to amend the certificate. The manufacturer may request a hearing on a denial.

(e) A manufacturer may make changes in or additions to production engines concurrently with notifying the Administrator as required by paragraph (a) of this section, if the manufacturer complies with the following requirements:

(1) In addition to the information required in paragraph (b) of this section, the manufacturer must supply supporting documentation, test data, and engineering evaluations as appropriate to demonstrate that all affected engines will still meet applicable emission standards.

(2) If, after a review, the Administrator determines additional testing is required, the manufacturer must provide required test data within 30 days or cease production of the affected engines.

(3) If the Administrator determines that the affected engines do not meet applicable requirements, the Administrator will notify the manufacturer to cease production of the affected engines and to recall and correct at no expense to the owner all affected engines previously produced.

(4) Election to produce engines under this paragraph will be deemed to be a consent to recall all engines which the Administrator determines do not meet applicable standards and to cause such nonconformity to be remedied at no expense to the owner.

[59 FR 31335, June 17, 1994. Redesignated at 63 FR 56995, Oct. 23, 1998]

§ 89.124 Record retention, maintenance, and submission.

(a) The manufacturer of any nonroad compression-ignition engine must maintain the following adequately organized records:

(1) Copies of all applications filed with the Administrator.

(2) A detailed history of each test engine used for certification including the following:

(i) A description of the test engine's construction, including a general description of the origin and buildup of the engine, steps taken to ensure that it is representative of production engines, description of components specially built for the test engine, and the origin and description of all emission-related components;

(ii) A description of the method used for service accumulation, including date(s) and the number of hours accumulated;

(iii) A description of all maintenance, including modifications, parts changes, and other servicing performed, and the date(s) and reason(s) for such maintenance;

(iv) A description of all emission tests performed (except tests performed by the EPA directly) including routine and standard test documentation, as specified in subpart E of this part, date(s) and the purpose of each test;

(v) A description of all tests performed to diagnose engine or emission control performance, giving the date and time of each and the reason(s) for the test; and

(vi) A description of any significant event(s) affecting the engine during the period covered by the history of the test engine but not described by an entry under one of the previous paragraphs of this section.

(3) Information required to be kept by the manufacturer in § 89.118(e)(3) for alternatives to service accumulation and testing for the determination of a deterioration factor.

(b) Routine emission test data, such as those reporting test cell temperature and relative humidity at start and finish of test and raw emission results from each mode or test phase, must be retained for a period of one year after issuance of all certificates of conformity to which they relate. All other information specified in paragraph (a) of this section must be retained for a period of eight years after issuance of all certificates of conformity to which they relate.

(c) Records may be kept in any format and on any media, provided that at the Administrator's request, organized, written records in English are promptly supplied by the manufacturer.

(d) The manufacturer must supply, at the Administrator's request, copies of any engine maintenance instructions or explanations issued by the manufacturer.

[59 FR 31335, June 17, 1994. Redesignated and amended at 63 FR 56995, 57005, Oct. 23, 1998]

§ 89.125 Production engines, annual report.

(a) Upon the Administrator's request, the manufacturer must supply a reasonable number of production engines for testing and evaluation. These engines must be representative of typical production and must be supplied for testing at such time and place and for such reasonable periods as the Administrator may require.

(b) The manufacturer must annually, within 30 days after the end of the model year, notify the Administrator of the number of engines produced by engine family, by gross power, by displacement, by fuel system, and, for engines produced under the provision of § 89.102(g), by engine model and purchaser (or shipping destination for engines used by the engine manufacturer), or by other categories as the Administrator may require.

[59 FR 31335, June 17, 1994. Redesignated and amended at 63 FR 56995, 57005, Oct. 23, 1998]

§ 89.126 Denial, revocation of certificate of conformity.

(a) If, after review of the manufacturer's application, request for certification, information obtained from any inspection, and any other information the Administrator may require, the Administrator determines that one or more test engines do not meet applicable standards (or family emission limits, as appropriate), then the Administrator will notify the manufacturer in writing, setting forth the basis for this determination.

(b) Notwithstanding the fact that engines described in the application may comply with all other requirements of this subpart, the Administrator may deny the issuance of, suspend, or revoke a previously issued certificate of conformity if the Administrator finds any one of the following infractions to be substantial:

(1) The manufacturer submits false or incomplete information;

(2) The manufacturer denies an EPA enforcement officer or EPA authorized representative the opportunity to conduct authorized inspections;

(3) The manufacturer fails to supply requested information or amend its application to include all engines being produced;

(4) The manufacturer renders inaccurate any test data which it submits or otherwise circumvents the intent of the Act or this part;

(5) The manufacturer denies an EPA enforcement officer or EPA authorized representative reasonable assistance (as defined in § 89.129(e)).

(c) If a manufacturer knowingly commits an infraction specified in paragraph (b)(1) or (b)(4) of this section, knowingly commits any other fraudulent act which results in the issuance of a certificate of conformity, or fails to comply with the conditions specified in § 89.203(d), § 89.206(c), § 89.209(c) or § 89.210(g), the Administrator may deem such certificate void ab initio.

(d) When the Administrator denies, suspends, revokes, or voids ab initio a

certificate of conformity the manufacturer will be provided a written determination. The manufacturer may request a hearing under § 89.127 on the Administrator's decision.

(e) Any suspension or revocation of a certificate of conformity shall extend no further than to forbid the introduction into commerce of engines previously covered by the certification which are still in the hands of the manufacturer, except in cases of such fraud or other misconduct that makes the certification invalid ab initio.

[59 FR 31335, June 17, 1994. Redesignated and amended at 63 FR 56995, 57005, Oct. 23, 1998]

§ 89.127 Request for hearing.

(a) A manufacturer may request a hearing on the Administrator's denial, suspension, voiding ab initio or revocation of a certificate of conformity.

(b) The manufacturer's request must be filed within 30 days of the Administrator's decision, be in writing, and set forth the manufacturer's objections to the Administrator's decision and data to support the objections.

(c) If, after review of the request and supporting data, the Administrator finds that the request raises a substantial and factual issue, the Administrator will grant the manufacturer's request for a hearing.

[59 FR 31335, June 17, 1994. Redesignated at 63 FR 56995, Oct. 23, 1998]

§ 89.128 Hearing procedures.

(a)(1) After granting a request for a hearing the Administrator shall designate a Presiding Officer for the hearing.

(2) The hearing will be held as soon as practicable at a time and place determined by the Administrator or by the Presiding Officer.

(3) The Administrator may, at his or her discretion, direct that all argument and presentation of evidence be concluded within a specified period established by the Administrator. Said period may be no less than 30 days from the date that the first written offer of a hearing is made to the manufacturer. To expedite proceedings, the Administrator may direct that the decision of the Presiding Officer (who may, but need not, be the Administrator) shall be the final EPA decision.

(b)(1) Upon appointment pursuant to paragraph (a) of this section, the Presiding Officer will establish a hearing file. The file shall consist of the following:

(i) The determination issued by the Administrator under § 89.126(d);

(ii) The request for a hearing and the supporting data submitted therewith;

(iii) All documents relating to the request for certification and all documents submitted therewith; and

(iv) Correspondence and other data material to the hearing.

(2) The hearing file will be available for inspection by the applicant at the office of the Presiding Officer.

(c) An applicant may appear in person or may be represented by counsel or by any other duly authorized representative.

(d)(1) The Presiding Officer, upon the request of any party or at his or her discretion, may arrange for a prehearing conference at a time and place he/she specifies. Such prehearing conference will consider the following:

(i) Simplification of the issues;

(ii) Stipulations, admissions of fact, and the introduction of documents;

(iii) Limitation of the number of expert witnesses;

(iv) Possibility of agreement disposing of any or all of the issues in dispute; and

(v) Such other matters as may aid in the disposition of the hearing, including such additional tests as may be agreed upon by the parties.

(2) The results of the conference shall be reduced to writing by the Presiding Officer and made part of the record.

(e)(1) Hearings shall be conducted by the Presiding Officer in an informal but orderly and expeditious manner. The parties may offer oral or written evidence, subject to the exclusion by the Presiding Officer of irrelevant, immaterial, and repetitious evidence.

(2) Witnesses will not be required to testify under oath. However, the Presiding Officer shall call to the attention of witnesses that their statements may be subject to the provisions of 18 U.S.C. 1001 which imposes penalties for knowingly making false statements or

representations or using false documents in any matter within the jurisdiction of any department or agency of the United States.

(3) Any witness may be examined or cross-examined by the Presiding Officer, the parties, or their representatives.

(4) Hearings shall be reported verbatim. Copies of transcripts of proceedings may be purchased by the applicant from the reporter.

(5) All written statements, charts, tabulations, and similar data offered in evidence at the hearings shall, upon a showing satisfactory to the Presiding Officer of their authenticity, relevancy, and materiality, be received in evidence and shall constitute a part of the record.

(6) Oral argument may be permitted at the discretion of the Presiding Officer and shall be reported as part of the record unless otherwise ordered by the Presiding Officer.

(f)(1) The Presiding Officer shall make an initial decision which shall include written findings and conclusions and the reasons or basis regarding all the material issues of fact, law, or discretion presented on the record. The findings, conclusions, and written decision shall be provided to the parties and made a part of the record. The initial decision shall become the decision of the Administrator without further proceedings, unless there is an appeal to the Administrator or motion for review by the Administrator within 20 days of the date the initial decision was filed. If the Administrator has determined under paragraph (a) of this section that the decision of the Presiding Officer is final, there is no right of appeal to the Administrator.

(2) On appeal from or review of the initial decision, the Administrator shall have all the powers which he or she would have in making the initial decision, including the discretion to require or allow briefs, oral argument, the taking of additional evidence, or the remanding to the Presiding Officer for additional proceedings. The decision by the Administrator may adopt the original decision or shall include written findings and conclusions and the reasons or basis therefor on all the material issues of fact, law, or discretion presented on the appeal or considered in the review.

[59 FR 31335, June 17, 1994. Redesignated at 63 FR 56995, Oct. 23, 1998]

§ 89.129 Right of entry.

(a) Any manufacturer who has applied for certification of a new engine or engine family subject to certification testing under this subpart shall admit or cause to be admitted to any of the following facilities during operating hours any EPA enforcement officer or EPA authorized representative on presentation of credentials.

(1) Any facility where any such certification testing or any procedures or activities connected with such certification testing are or were performed;

(2) Any facility where any new engine which is being, was, or is to be tested is present;

(3) Any facility where any construction process or assembly process used in the modification or buildup of such an engine into a certification engine is taking place or has taken place; and

(4) Any facility where any record or other document relating to any of the above is located.

(b) Upon admission to any facility referred to in paragraph (a)(1) of this section, any EPA enforcement officer or EPA authorized representative shall be allowed:

(1) To inspect and monitor any part or aspect of such procedures, activities, and testing facilities, including, but not limited to, monitoring engine preconditioning, emission tests and service accumulation, maintenance, and engine storage procedures, and to verify correlation or calibration of test equipment;

(2) To inspect and make copies of any such records, designs, or other documents; and

(3) To inspect and photograph any part or aspect of any such certification engine and any components to be used in the construction thereof.

(c) To allow the Administrator to determine whether production engines conform in all material respects to the design specifications applicable to those engines, as described in the application for certification for which a certificate of conformity has been issued, any manufacturer shall admit any EPA

enforcement officer or EPA authorized representative on presentation of credentials to:

(1) Any facility where any document, design, or procedure relating to the translation of the design and construction of engines and emission-related components described in the application for certification or used for certification testing into production engines is located or carried on; and

(2) Any facility where any engines to be introduced into commerce are manufactured or assembled.

(d) On admission to any such facility referred to in paragraph (c) of this section, any EPA enforcement officer or EPA authorized representative shall be allowed:

(1) To inspect and monitor any aspects of such manufacture or assembly and other procedures;

(2) To inspect and make copies of any such records, documents or designs; and

(3) To inspect and photograph any part or aspect of any such new engines and any component used in the assembly thereof that are reasonably related to the purpose of his or her entry.

(e) Any EPA enforcement officer or EPA authorized representative shall be furnished by those in charge of a facility being inspected with such reasonable assistance as he or she may request to help the enforcement officer or authorized representative discharge any function listed in this paragraph. Each applicant for or recipient of certification is required to cause those in charge of a facility operated for its benefit to furnish such reasonable assistance without charge to EPA whether or not the applicant controls the facility.

(1) Reasonable assistance includes, but is not limited to, clerical, copying, interpretation and translation services; the making available on request of personnel of the facility being inspected during their working hours to inform the EPA enforcement officer or EPA authorized representative of how the facility operates and to answer the officer's questions; and the performance on request of emission tests on any engine which is being, has been, or will be used for certification testing. Such tests shall be nondestructive, but may require appropriate service accumulation.

(2) A manufacturer may be compelled to cause any employee at a facility being inspected to appear before an EPA enforcement officer or EPA authorized representative. The request for the employee's appearance shall be in writing, signed by the Assistant Administrator for Air and Radiation, and served on the manufacturer. Any employee who has been instructed by the manufacturer to appear will be entitled to be accompanied, represented, and advised by counsel.

(f) The duty to admit or cause to be admitted any EPA enforcement officer or EPA authorized representative applies whether or not the applicant owns or controls the facility in question and applies both to domestic and to foreign manufacturers and facilities. EPA will not attempt to make any inspections which it has been informed that local law forbids. However, if local law makes it impossible to do what is necessary to ensure the accuracy of data generated at a facility, no informed judgment that an engine is certifiable or is covered by a certificate can properly be based on those data. It is the responsibility of the manufacturer to locate its testing and manufacturing facilities in jurisdictions where this situation will not arise.

(g) Any entry without 24 hours prior written or oral notification to the affected manufacturer shall be authorized in writing by the Assistant Administrator for Enforcement.

[59 FR 31335, June 17, 1994. Redesignated at 63 FR 56995, Oct. 23, 1998]

§ 89.130 Rebuild practices.

The provisions of 40 CFR 1068.120 apply to rebuilding of engines subject to the requirements of this part 89, except Tier 1 engines rated at or above 37 kW.

[70 FR 40445, July 13, 2005]

Subpart C—Averaging, Banking, and Trading Provisions

§ 89.201 Applicability.

Nonroad compression-ignition engines subject to the provisions of subpart A of this part are eligible to participate in the averaging, banking, and trading program described in this subpart. To the extent specified in 40 CFR part 60, subpart IIII, stationary engines certified under this part and subject to the standards of 40 CFR part 60, subpart IIII, may participate in the averaging, banking, and trading program described in this subpart.

[71 FR 39184, July 11, 2006]

§ 89.202 Definitions.

The definitions in subpart A of this part apply to this subpart. The following definitions also apply to this subpart:

Averaging for nonroad engines means the exchange of emission credits among engine families within a given manufacturer's product line.

Banking means the retention of nonroad engine emission credits by the manufacturer generating the emission credits for use in future model year averaging or trading as permitted by these regulations.

Emission credits represent the amount of emission reduction or exceedance, by a nonroad engine family, below or above the emission standard, respectively. Emission reductions below the standard are considered as ''positive credits,'' while emission exceedances above the standard are considered as ''negative credits.'' In addition, ''projected credits'' refer to emission credits based on the projected applicable production/sales volume of the engine family. ''Reserved credits'' are emission credits generated within a model year waiting to be reported to EPA at the end of the model year. ''Actual credits'' refer to emission credits based on actual applicable production/sales volume as contained in the end-of-year reports submitted to EPA. Some or all of these credits may be revoked if EPA review of the end-of-year reports or any subsequent audit action(s) uncovers problems or errors.

Trading means the exchange of nonroad engine emission credits between manufacturers.

[59 FR 31335, June 17, 1994. Redesignated at 63 FR 56995, Oct. 23, 1998]

§ 89.203 General provisions.

(a) The averaging, banking, and trading programs for NO_X. NMHC+NO_X. and PM emissions from eligible nonroad engines are described in this subpart. Participation in these programs is voluntary.

(b) *Requirements for Tier 1 engines rated at or above 37 kW.* (1) A nonroad engine family is eligible to participate in the averaging, banking, and trading program for NO_X emissions and the banking and trading program for PM emissions if it is subject to regulation under subpart B of this part with certain exceptions specified in paragraph (b)(2) of this section. No averaging, banking, and trading program is available for meeting the Tier 1 HC, CO, or smoke emission standards specified in subpart B of this part. No averaging program is available for meeting the Tier 1 PM emission standards specified in subpart B of this part.

(2) Nonroad engines may not participate in the averaging, banking, and trading programs if they are exported or are sold as Blue Sky Series engines as described in § 89.112(f). Nonroad engines certified on a special test procedure under § 89.114(a), may not participate in the averaging, banking and trading programs unless the manufacturer has requested that the engines be included in the averaging, banking, and trading programs at the time the request for the special test procedure is made and has been granted approval by the Administrator for inclusion in the averaging, banking, and trading programs.

(3) A manufacturer may certify one or more nonroad engine families at NO_X family emission limits (FELs) above or below the Tier 1 NO_X emission standard, provided the summation of the manufacturer's projected balance of all NO_X credit transactions in a given model year is greater than or equal to zero, as determined under § 89.207(a). A manufacturer may certify one or more nonroad engine families at PM FELs below the Tier 2 PM emission

standard that will be applicable to those engine families.

(i) FELs for NO_X may not exceed the Tier 1 upper limit specified in § 89.112(d).

(ii) An engine family certified to an FEL is subject to all provisions specified in this part, except that the applicable FEL replaces the emission standard for the family participating in the averaging, banking, and trading program.

(iii) A manufacturer of an engine family with a NO_X FEL exceeding the Tier 1 NO_X emission standard must obtain NO_X emission credits sufficient to address the associated credit shortfall via averaging, banking, or trading.

(iv) An engine family with a NO_X FEL below the applicable Tier 1 standard may generate emission credits for averaging, banking, trading, or a combination thereof. An engine family with a PM FEL below the Tier 2 standard that will be applicable to that engine family may generate emission credits for banking, trading, or a combination thereof. Emission credits may not be used to offset an engine family's emissions that exceed its applicable FEL. Credits may not be used to remedy nonconformity determined by a Selective Enforcement Audit (SEA) or by recall (in-use) testing. However, in the case of an SEA failure, credits may be used to allow subsequent production of engines for the family in question if the manufacturer elects to recertify to a higher FEL.

(4) NO_X credits generated in a given model year may be used to address credit shortfalls with other engines during that model year or in any subsequent model year except as noted under paragraph (b)(5)(ii) of this section. PM credits may be used to address credit shortfalls with Tier 2 and later engines greater than or equal to 37 kW and Tier 1 and later engines less than 37 kW and greater than or equal to 19 kW. Credits generated in one model year may not be used for prior model years.

(5) The following provisions apply to the use of Tier 1 NO_X credits for showing compliance with the Tier 2 or Tier 3 NMHC+NO_X standards.

(i) A manufacturer may use NO_X credits from engines subject to the Tier 1 NO_X standard to address NMHC+NO_X credit shortfalls with engines in the same averaging set subject to Tier 1 NMHC+NO_X or Tier 2 NMHC+NO_X emission standards.

(ii) A manufacturer may not use NO_X credits from engines subject to the Tier 1 standards to address NMHC+NO_X credit shortfalls with engines subject to the Tier 3 NMHC+NO_X emission standards.

(c) *Requirements for Tier 2 and later engines rated at or above 37 kW and Tier 1 and later engines rated under 37 kW.* (1) A nonroad engine family is eligible to participate in the averaging, banking, and trading programs for NMHC+NO_X emissions and PM emissions if it is subject to regulation under subpart B of this part with certain exceptions specified in paragraph (c)(2) of this section. No averaging, banking, and trading program is available for meeting the CO or smoke emission standards specified in subpart B of this part.

(2) Nonroad engines may not participate in the averaging, banking, and trading programs if they are exported or are sold as Blue Sky Series engines as described in § 89.112(f). Nonroad engines certified on a special test procedure under § 89.114(a), may not participate in the averaging, banking and trading programs unless the manufacturer has requested that the engines be included in the averaging, banking, and trading programs at the time the request for the special test procedure is made and has been granted approval by the Administrator for inclusion in the averaging, banking, and trading programs.

(3)(i) A manufacturer may certify one or more nonroad engine families at FELs above or below the applicable NMHC+NO_X emission standard and PM emission standard, provided the summation of the manufacturer's projected balance of all NMHC+NO_X credit transactions and the summation of the manufacturer's projected balance of all PM credit transactions in a given model year in a given averaging set is greater than or equal to zero, as determined under § 89.207(b).

(A) FELs for NMHC+NO_X and FELs for PM may not exceed the upper limits specified in § 89.112(d).

(B) An engine family certified to an FEL is subject to all provisions specified in this part, except that the applicable FEL replaces the emission standard for the family participating in the averaging, banking, and trading program.

(C) A manufacturer of an engine family with an FEL exceeding the applicable emission standard must obtain emission credits sufficient to address the associated credit shortfall via averaging, banking, or trading, within the restrictions described in § 89.204(c) and § 89.206(b)(4).

(D) An engine family with an FEL below the applicable standard may generate emission credits for averaging, banking, trading, or a combination thereof. Emission credits may not be used to offset an engine family's emissions that exceed its applicable FEL. Credits may not be used to remedy nonconformity determined by a Selective Enforcement Audit (SEA) or by recall (in-use) testing. However, in the case of an SEA failure, credits may be used to allow subsequent production of engines for the family in question if the manufacturer elects to recertify to a higher FEL.

(ii)(A) In lieu of generating credits under paragraph (c)(3)(i) of this section, a manufacturer may certify one or more nonroad engine families rated under 37 kW at family emission limits (FELs) above or below the applicable NMHC+NO_X emission standard and PM emission standard. The summation of the manufacturer's projected balance of all NMHC+NO_X credit transactions and the summation of the manufacturer's projected balance of all PM credit transactions in a given model year, as determined under § 89.207(b), are each allowed to be less than zero. Separate calculations shall be required for the following two categories of engines: engines rated under 19 kW and engines rated at or above 19 kW and under 37 kW.

(B) For each calendar year a negative credit balance exists as of December 31, a penalty equal to ten percent of the negative credit balance as of December 31 of the calendar year shall be added to the negative credit balance. The resulting negative credit balance shall be carried into the next calendar year.

(C) For engines rated under 19 kW, a manufacturer will be allowed to carry over a negative credit balance until December 31, 2003. For engines rated at or above 19 kW and under 37 kW, a manufacturer will be allowed to carry over a negative credit balance until December 31, 2002. As of these dates, the summation of the manufacturer's projected balance of all NMHC+NO_X credit transactions and the summation of the manufacturer's projected balance of all PM credit transactions must each be greater than or equal to zero.

(D) FELs for NMHC+NO_X and FELs for PM may not exceed the upper limits specified in § 89.112(d).

(E) An engine family certified to an FEL is subject to all provisions specified in this part, except that the applicable NMHC+NO_X FEL or PM FEL replaces the NMHC+NO_X emission standard or PM emission standard for the family participating in the averaging and banking program.

(F) A manufacturer of an engine family with an FEL exceeding the applicable emission standard must obtain emission credits sufficient to address the associated credit shortfall via averaging or banking. The exchange of emission credits generated under this program with other nonroad engine manufacturers in trading is not allowed.

(G) An engine family with an FEL below the applicable standard may generate emission credits for averaging, banking, or a combination thereof. Emission credits may not be used to offset an engine family's emissions that exceed its applicable FEL. Credits may not be used to remedy nonconformity determined by a Selective Enforcement Audit (SEA) or by recall (in-use) testing. However, in the case of an SEA failure, credits may be used to allow subsequent production of engines for the family in question if the manufacturer elects to recertify to a higher FEL.

(4)(i) Except as noted in paragraphs (c)(4)(ii), (c)(4)(iii), and (c)(4)(iv) of this section, credits generated in a given model year may be used during that model year or used in any subsequent model year. Except as allowed under paragraph (c)(3)(ii) of this section,

credits generated in one model year may not be used for prior model years.

(ii) Credits generated from engines rated under 19 kW prior to the implementation date of the applicable Tier 2 standards, shall expire on December 31, 2007.

(iii) Credits generated from engines rated under 19 kW under the provisions of paragraph (c)(3)(ii) shall expire on December 31, 2003.

(iv) Credits generated from engines rated at or above 19 kW and under 37 kW under the provisions of paragraph (c)(3)(ii) of this section shall expire on December 31, 2002.

(5) Except as provided in paragraph (b)(3) of this section, engine families may not generate credits for one pollutant while also using credits for another pollutant in the same model year.

(6) Model year 2008 and 2009 engines rated under 8 kW that are allowed to certify under this part because they meet the criteria in 40 CFR 1039.101(c) may not generate emission credits.

(d) Manufacturers must demonstrate compliance under the averaging, banking, and trading programs for a particular model year within 270 days of the end of the model year. Except as allowed under paragraph (c)(3)(ii) of this section, manufacturers that have certified engine families to FELs above the applicable emission standards and do not have sufficient emission credits to offset the difference between the emission standards and the FEL for such engine families will be in violation of the conditions of the certificate of conformity for such engine families. The certificates of conformity may be voided ab initio under § 89.126(c) for those engine families.

[63 FR 57006, Oct. 23, 1998, as amended at 69 FR 39213, June 29, 2004]

§ 89.204 Averaging.

(a) *Requirements for Tier 1 engines rated at or above 37 kW.* A manufacturer may use averaging to offset an emission exceedance of a nonroad engine family caused by a NO_X FEL above the applicable emission standard. NO_X credits used in averaging may be obtained from credits generated by another engine family in the same model year, credits banked in a previous model year, or credits obtained through trading.

(b) *Requirements for Tier 2 and later engines rated at or above 37 kW and Tier 1 and later engines rated under 37 kW.* A manufacturer may use averaging to offset an emission exceedance of a nonroad engine family caused by an NMHC+;NO_X FEL or a PM FEL above the applicable emission standard. Credits used in averaging may be obtained from credits generated by another engine family in the same model year, credits banked in previous model years that have not expired, or credits obtained through trading. The use of credits shall be within the restrictions described in paragraph (c) of this section, § 89.206(b)(4) and § 89.203(b)(5)(ii).

(c) *Averaging sets for emission credits.* The averaging and trading of NO_X emission credits, NMHC + NO_X emission credits, and PM emissions credits will only be allowed between engine families in the same averaging set. The averaging sets for the averaging and trading of NO_X emission credits, NMHC + NO_X emission credits, and PM emission credits for nonroad engines are defined as follows:

(1) Eligible engines rated at or above 19 kW, other than marine diesel engines, constitute an averaging set.

(2) Eligible engines rated under 19 kW, other than marine diesel engines, constitute an averaging set.

(3) Marine diesel engines rated at or above 19 kW constitute an averaging set. Emission credits generated from marine diesel engines rated at or above 19 kW may be used to address credit shortfalls for eligible engines rated at or above 19 kW other than marine diesel engines.

(4) Marine diesel engines rated under 19 kW constitute an averaging set. Emission credits generated from marine diesel engines rated under 19 kW may be used to address credit shortfalls for eligible engines rated under 19 kW other than marine diesel engines.

[63 FR 57007, Oct. 23, 1998]

§ 89.205 Banking.

(a) *Requirements for Tier 1 engines rated at or above 37 kW.* (1) A manufacturer of a nonroad engine family with a NO_X FEL below the applicable standard

for a given model year may bank credits in that model year for use in averaging and trading in any subsequent model year.

(2) A manufacturer of a nonroad engine family may bank NO_X credits up to one calendar year prior to the effective date of mandatory certification. Such engines must meet the requirements of subparts A, B, D, E, F, G, H, I, J, and K of this part.

(3)(i) A manufacturer of a nonroad engine family may bank PM credits from Tier 1 engines under the provisions specified in § 89.207(b) for use in averaging and trading in the Tier 2 or later timeframe. These credits are considered to be Tier 2 credits.

(ii) Such engine families are subject to all provisions specified in subparts A, B, D, E, F, G, H, I, J, and K of this part, except that the applicable PM FEL replaces the PM emission standard for the family participating in the banking and trading program.

(b) *Requirements for Tier 2 and later engines rated at or above 37 kW and Tier 1 and later engines rated under 37 kW.* (1) A manufacturer of a nonroad engine family with an NMHC + NO_X FEL or a PM FEL below the applicable standard for a given model year may bank credits in that model year for use in averaging and trading in any following model year.

(2) For engine rated under 37 kW, a manufacturer of a nonroad engine family may bank credits prior to the effective date of mandatory certification. Such engines must meet the requirements of subparts A, B, D, E, F, G, H, I, J, and K of this part.

(c) A manufacturer may bank actual credits only after the end of the model year and after EPA has reviewed the manufacturer's end-of-year reports. During the model year and before submittal of the end-of-year report, credits originally designated in the certification process for banking will be considered reserved and may be redesignated for trading or averaging in the end-of-year report and final report.

(d) Credits declared for banking from the previous model year that have not been reviewed by EPA may be used in averaging or trading transactions. However, such credits may be revoked at a later time following EPA review of the end-of-year report or any subsequent audit actions.

[63 FR 57008, Oct. 23, 1998, as amended at 72 FR 53129, Sept. 18, 2007]

§ 89.206 Trading.

(a) *Requirements for Tier 1 engines rated at or above 37 kW.* (1) A nonroad engine manufacturer may exchange emission credits with other nonroad engine manufacturers within the same averaging set in trading.

(2) Credits for trading can be obtained from credits banked in a previous model year or credits generated during the model year of the trading transaction.

(3) Traded credits can be used for averaging, banking, or further trading transactions within the restrictions described in § 89.204(c).

(b) *Requirements for Tier 2 and later engines rated at or above 37 kW and Tier 1 and later engines rated under 37 kW.* (1) A nonroad engine manufacturer may exchange emission credits with other nonroad engine manufacturers within the same averaging set in trading.

(2) Credits for trading can be obtained from credits banked in previous model years that have not expired or credits generated during the model year of the trading transaction.

(3) Traded credits can be used for averaging, banking, or further trading transactions within the restrictions described in § 89.204(c) and paragraph (b)(4) of this section.

(4) Emission credits generated from engines rated at or above 19 kW utilizing indirect fuel injection may not be traded to other manufacturers.

(c) In the event of a negative credit balance resulting from a transaction, both the buyer and the seller are liable, except in cases deemed involving fraud. Certificates of all engine families participating in a negative trade may be voided ab initio under § 89.126(c).

[63 FR 57008, Oct. 23, 1998]

§ 89.207 Credit calculation.

(a) *Requirements for calculating NO_X credits from Tier 1 engines rated at or above 37 kW.* (1) For each participating engine family, emission credits (positive or negative) are to be calculated

according to one of the following equations and rounded, in accordance with ASTM E29–93a, to the nearest one-hundredth of a megagram (Mg). This ASTM procedure has been incorporated by reference (see § 89.6). Consistent units are to be used throughout the equation.

(i) For determining credit availability from all engine families generating credits: Emission credits = (Std − FEL) × (Volume) × (AvgPR) × (UL) × (Adjustment) × (10^{-6})

(ii) For determining credit usage for all engine families requiring credits to offset emissions in excess of the standard:

Emission credits = (Std − FEL) × (Volume) × (AvgPR) × (UL) × (10^{-6})

Where:

Std = the applicable Tier 1 NO_X nonroad engine emission standard, in grams per kilowatt-hour.

FEL = the NO_X family emission limit for the engine family in grams per kilowatt-hour.

Volume = the number of nonroad engines eligible to participate in the averaging, banking, and trading program within the given engine family during the model year. Engines sold to equipment or vehicle manufacturers under the provisions of § 89.102(g) shall not be included in this number. Quarterly production projections are used for initial certification. Actual applicable production/sales volume is used for end-of-year compliance determination.

AvgPR = the average power rating of all of the configurations within an engine family, calculated on a sales-weighted basis, in kilowatts.

UL = the useful life for the engine family, in hours.

Adjustment = a one-time adjustment, as specified in paragraph (a)(2) of this section, to be applied to Tier 1 NO_X credits to be banked or traded for determining compliance with the Tier 1 NO_X standards or Tier 2 NO_X+NMHC standards specified in subpart B of this part. Banked credits traded in a subsequent model year will not be subject to an additional adjustment. Banked credits used in a subsequent model year's averaging program will not have the adjustment restored.

(2) If an engine family is certified to a NO_X FEL of 8.0 g/kW-hr or less, an Adjustment value of 1.0 shall be used in the credit generation calculation described in paragraph (a)(1)(i) of this section. If an engine family is certified to a NO_X FEL above 8.0 g/kW-hr, an Adjustment value of 0.65 shall be used in the credit generation calculation described in paragraph (a)(1)(i) of this section. If the credits are to be used by the credit-generating manufacturer for averaging purposes in the same model year in which they are generated, an Adjustment value of 1.0 shall be used for all engines regardless of the level of the NO_X FEL. If the credits are to be banked by the credit-generating manufacturer and used in a subsequent model year for another Tier 1 engine family, an Adjustment value of 1.0 shall be used for all engines regardless of the level of the NO_X FEL.

(b) *Requirements for calculating NMHC + NO_X Credits from Tier 2 and later engines rated at or above 37 kW and Tier 1 and later engines rated under 37 kW and PM credits from all engines.* (1) For each participating engine family, NO_X + NMHC emission credits and PM emission credits (positive or negative) are to be calculated according to one of the following equations and rounded, in accordance with ASTM E29–93a, to the nearest one-hundredth of a megagram (Mg). This procedure has been incorporated by reference (see § 89.6). Consistent units are to be used throughout the equation.

(i) For determining credit availability from all engine families generating credits:

Emission credits = (Std-FEL) × (Volume) × (AvgPR) × (UL) × (10^{-6})

(ii) For determining credit usage for all engine families requiring credits to offset emissions in excess of the standard:

Emission credits = (Std-FEL) × (Volume) × (AvgPR) × (UL) × (10^{-6})

Where:

Std = the current and applicable nonroad engine emission standard, in grams per kilowatt-hour, except for PM calculations where it is the applicable nonroad engine Tier 2 PM emission standard, and except for engines rated under 19 kW where it is the applicable nonroad engine Tier 2 emission standard, in grams per kilowatt-hour. (Engines rated under 19 kW participating in the averaging and banking program provisions of § 89.203(c)(3)(ii) shall use the Tier 1 standard for credit calculations.)

FEL = the family emission limit for the engine family in grams per kilowatt-hour.

Volume = the number of nonroad engines eligible to participate in the averaging, banking, and trading program within the given engine family during the model year. Engines sold to equipment or vehicle manufacturers under the provisions of § 89.102(g) shall not be included in this number. Quarterly production projections are used for initial certification. Actual applicable production/sales volume is used for end-of-year compliance determination.

AvgPR = the average power rating of all of the configurations within an engine family, calculated on a sales-weighted basis, in kilowatts.

UL = the useful life for the given engine family, in hours.

[63 FR 57008, Oct. 23, 1998]

§ 89.208 Labeling.

For all nonroad engines included in the averaging, banking, and trading programs, the family emission limits to which the engine is certified must be included on the label required in § 89.110.

[63 FR 57009, Oct. 23, 1998]

§ 89.209 Certification.

(a) In the application for certification a manufacturer must:

(1) Declare its intent to include specific engine families in the averaging, banking, and trading programs.

(2) Submit a statement that the engines for which certification is requested will not, to the best of the manufacturer's belief, cause the manufacturer to have a negative credit balance when all credits are calculated for all the manufacturer's engine families participating in the averaging, banking, and trading programs, except as allowed under § 89.203(c)(3)(ii).

(3) Declare the applicable FELs for each engine family participating in averaging, banking, and trading.

(i) The FELs must be to the same number of significant digits as the emission standard for the applicable pollutant.

(ii) In no case may the FEL exceed the upper limits prescribed in § 89.112(d).

(4) Indicate the projected number of credits generated/needed for this family; the projected applicable production/sales volume, by quarter; and the values required to calculate credits as given in § 89.207.

(5) Submit calculations in accordance with § 89.207 of projected emission credits (positive or negative) based on quarterly production projections for each participating family.

(6)(i) If the engine family is projected to have negative emission credits, state specifically the source (manufacturer/engine family or reserved) of the credits necessary to offset the credit deficit according to quarterly projected production, or, if the engine family is to be included in the provisions of § 89.203(c)(3)(ii), state that the engine family will be subject to those provisions.

(ii) If the engine family is projected to generate credits, state specifically (manufacturer/engine family or reserved) where the quarterly projected credits will be applied.

(b) All certificates issued are conditional upon manufacturer compliance with the provisions of this subpart both during and after the model year of production.

(c) Failure to comply with all provisions of this subpart will be considered to be a failure to satisfy the conditions upon which the certificate was issued, and the certificate may be deemed void ab initio.

(d) The manufacturer bears the burden of establishing to the satisfaction of the Administrator that the conditions upon which the certificate was issued were satisfied or waived.

(e) Projected credits based on information supplied in the certification application may be used to obtain a certificate of conformity. However, any such credits may be revoked based on review of end-of-year reports, follow-up audits, and any other verification steps deemed appropriate by the Administrator.

[59 FR 31335, June 17, 1994. Redesignated and amended at 63 FR 56995, 57009, Oct. 23, 1998]

§ 89.210 Maintenance of records.

(a) The manufacturer of any nonroad engine that is certified under the averaging, banking, and trading program must establish, maintain, and retain the following adequately organized and indexed records for each such engine produced:

(1) EPA engine family;

(2) Engine identification number;

(3) Engine model year and build date,

(4) Power rating;

(5) Purchaser and destination; and

(6) Assembly plant.

(b) The manufacturer of any nonroad engine family that is certified under the averaging, banking, and trading programs must establish, maintain, and retain the following adequately organized and indexed records for each such family:

(1) EPA engine family;

(2) Family emission limits (FEL);

(3) Power rating for each configuration tested;

(4) Projected applicable production/sales volume for the model year; and

(5) Actual applicable production/sales volume for the model year.

(c) Any manufacturer producing an engine family participating in trading reserved credits must maintain the following records on a quarterly basis for each engine family in the trading program:

(1) The engine family;

(2) The actual quarterly and cumulative applicable production/sales volume;

(3) The values required to calculate credits as given in § 89.207;

(4) The resulting type and number of credits generated/required;

(5) How and where credit surpluses are dispersed; and

(6) How and through what means credit deficits are met.

(d) The manufacturer must retain all records required to be maintained under this section for a period of eight years from the due date for the end-of-model-year report. Records may be retained as hard copy or reduced to microfilm, ADP diskettes, and so forth, depending on the manufacturer's record retention procedure; provided, that in every case all information contained in the hard copy is retained.

(e) Nothing in this section limits the Administrator's discretion in requiring the manufacturer to retain additional records or submit information not specifically required by this section.

(f) Pursuant to a request made by the Administrator, the manufacturer must submit to the Administrator the information that the manufacturer is required to retain.

(g) EPA may void ab initio under § 89.126(c) a certificate of conformity for an engine family for which the manufacturer fails to retain the records required in this section or to provide such information to the Administrator upon request.

[59 FR 31335, June 17, 1994. Redesignated and amended at 63 FR 56995, 57009, Oct. 23, 1998]

§ 89.211 End-of-year and final reports.

(a) End-of-year and final reports must indicate the engine family, the actual applicable production/sales volume, the values required to calculate credits as given in § 89.207, and the number of credits generated/required. Manufacturers must also submit how and where credit surpluses were dispersed (or are to be banked) and/or how and through what means credit deficits were met. Copies of contracts related to credit trading must be included or supplied by the broker, if applicable. The report shall include a calculation of credit balances to show that the summation of the manufacturer's use of credits results in a credit balance equal to or greater than zero, except as allowed under § 89.203(c)(3)(ii). Manufacturers participating under the program described in § 89.203(c)(3)(ii) shall include the NMHC + NO_X credit balance and the PM credit balance as of December 31 of that calendar year.

(b) The applicable production/sales volume for end-of-year and final reports must be based on the location of the point of first retail sale (for example, retail customer, dealer, secondary manufacturer) also called the final product purchase location.

(c)(1) End-of-year reports must be submitted within 90 days of the end of the model year to: Director, Engine Programs and Compliance Division (6405-J), U.S. Environmental Protection Agency, 401 M St., SW., Washington, DC 20460.

(2) Final reports must be submitted within 270 days of the end of the model year to: Director, Engine Programs and Compliance Division (6405-J), U.S. Environmental Protection Agency, 401 M St., SW., Washington, DC 20460.

(d) Failure by a manufacturer participating in the averaging, banking, or trading program to submit any end-of-year or final reports in the specified

time for all engines is a violation of sections 203(a)(1) and 213 of the Clean Air Act for each engine.

(e) A manufacturer generating credits for deposit only who fails to submit end-of-year reports in the applicable specified time period (90 days after the end of the model year) may not use the credits until such reports are received and reviewed by EPA. Use of projected credits pending EPA review is not permitted in these circumstances.

(f) Errors discovered by EPA or the manufacturer in the end-of-year report, including errors in credit calculation, may be corrected in the final report up to 270 days from the end of the model year.

(g) If EPA or the manufacturer determines that a reporting error occurred on an end-of-year or final report previously submitted to EPA under this section, the manufacturer's credits and credit calculations will be recalculated. Erroneous positive credits will be void except as provided in paragraph (h) of this section. Erroneous negative credit balances may be adjusted by EPA.

(h) If within 270 days of the end of the model year, EPA review determines a reporting error in the manufacturer's favor (that is, resulting in an increased credit balance) or if the manufacturer discovers such an error within 270 days of the end of the model year, the credits shall be restored for use by the manufacturer.

[59 FR 31335, June 17, 1994. Redesignated and amended at 63 FR 56995, 57009, Oct. 23, 1998]

§ 89.212 Notice of opportunity for hearing.

Any voiding of the certificate under §§ 89.203(d), 89.206(c), 89.209(c) or 89.210(g) will be made only after the manufacturer concerned has been offered an opportunity for a hearing conducted in accordance with §§ 89.512 and 89.513 and, if a manufacturer requests such a hearing, will be made only after an initial decision by the Presiding Officer.

[63 FR 57010, Oct. 23, 1998]

Subpart D—Emission Test Equipment Provisions

§ 89.301 Scope; applicability.

(a) This subpart describes the equipment required in order to perform exhaust emission tests on new nonroad compression-ignition engines subject to the provisions of subpart B of part 89.

(b) Exhaust gases, either raw or dilute, are sampled while the test engine is operated using an 8-mode test cycle on an engine dynamometer. The exhaust gases receive specific component analysis determining concentration of pollutant, exhaust volume, the fuel flow, and the power output during each mode. Emission is reported as grams per kilowatt hour (g/kw-hr). See subpart E of this part for a complete description of the test procedure.

(c) General equipment and calibration requirements are given in § 89.304 through 89.324. Sections 89.325 through 89.331 set forth general test specifications.

(d) Additional information about system design, calibration methodologies, and so forth, for raw gas sampling can be found in 40 CFR part 1065. Examples for system design, calibration methodologies, and so forth, for dilute exhaust gas sampling can be found in 40 CFR part 1065.

[59 FR 31335, June 17, 1994. Redesignated at 63 FR 56995, Oct. 23, 1998, as amended at 70 FR 40445, July 13, 2005]

§ 89.302 Definitions.

The definitions in subpart A of this part apply to this subpart. For terms not defined in this part, the definitions in 40 CFR part 86, subparts A, D, I, and N, apply to this subpart.

[63 FR 57010, Oct. 23, 1998]

§ 89.303 Symbols/abbreviations.

(a) The abbreviations in § 86.094–3 or part 89.3 of this chapter apply to this subpart.

(b) The abbreviations in table 1 in appendix A of this subpart apply to this subpart. Some abbreviations from § 89.3 have been included for the convenience of the reader.

(c) The symbols in table 2 in appendix A of this subpart apply to this subpart.

[59 FR 31335, June 17, 1994. Redesignated at 63 FR 56995, Oct. 23, 1998]

§ 89.304 Equipment required for gaseous emissions; overview.

(a) All engines subject to this subpart are tested for exhaust emissions. Engines are operated on dynamometers meeting the specification given in § 89.306.

(b) The exhaust is tested for gaseous emissions using a raw gas sampling system as described in § 89.412 or a constant volume sampling (CVS) system as described in § 89.419. Both systems require analyzers (see paragraph (c) of this section) specific to the pollutant being measured.

(c) Analyzers used are a non-dispersive infrared (NDIR) absorption type for carbon monoxide and carbon dioxide analysis; a heated flame ionization (HFID) type for hydrocarbon analysis; and a chemiluminescent detector (CLD) or heated chemiluminescent detector (HCLD) for oxides of nitrogen analysis. Sections 89.309 through 89.324 set forth a full description of analyzer requirements and specifications.

[59 FR 31335, June 17, 1994. Redesignated and amended at 63 FR 56995, 57010, Oct. 23, 1998]

§ 89.305 Equipment measurement accuracy/calibration frequency.

The accuracy of measurements must be such that the maximum tolerances shown in Table 3 in appendix A of this subpart are not exceeded. Calibrate all equipment and analyzers according to the frequencies shown in Table 3 in appendix A of this subpart.

[59 FR 31335, June 17, 1994. Redesignated at 63 FR 56995, Oct. 23, 1998]

§ 89.306 Dynamometer specifications and calibration weights.

(a) *Dynamometer specifications*. The dynamometer test stand and other instruments for measurement of power output must meet the accuracy and calibration frequency requirements shown in table 3 in appendix A of this subpart. The dynamometer must be capable of performing the test cycle described in § 89.410.

(b) *Dynamometer calibration weights*. A minimum of six calibration weights for each range used are required. The weights must be spaced to reflect good engineering judgement such that they cover the range of weights required and must be traceable to within 0.5 percent of NIST weights. Laboratories located in foreign countries may certify calibration weights to local government bureau standards.

[59 FR 31335, June 17, 1994. Redesignated at 63 FR 56995, Oct. 23, 1998]

§ 89.307 Dynamometer calibration.

(a) If necessary, follow the dynamometer manufacturer's instructions for initial start-up and basic operating adjustments.

(b) Check the dynamometer torque measurement for each range used by the following method:

(1) Warm up the dynamometer following the dynamometer manufacturer's specifications.

(2) Determine the dynamometer calibration moment arm (a distance/weight measurement). Dynamometer manufacturer's data, actual measurement, or the value recorded from the previous calibration used for this subpart may be used.

(3) When calibrating the engine flywheel torque transducer, any lever arm used to convert a weight or a force through a distance into a torque must be in a horizontal position (±5 degrees).

(4) Calculate the indicated torque (IT) for each calibration weight to be used by:

IT = calibration weight (N) × calibration moment arm (m)

(5) Attach each calibration weight specified in § 89.306 to the moment arm at the calibration distance determined in paragraph (b)(2) of this section. Record the power measurement equipment response (N − m) to each weight.

(6) For each calibration weight, compare the torque value measured in paragraph (b)(5) of this section to the calculated torque determined in paragraph (b)(4) of this section.

(7) The measured torque must be within either 2 percent of point or 1 percent of the engine maximum torque of the calculated torque.

(8) If the measured torque is not within the above requirements, adjust or repair the system. Repeat steps in paragraphs (b)(1) through (b)(6) of this section with the adjusted or repaired system.

(c) Optional. A master load-cell or transfer standard may be used to verify the torque measurement system.

(1) The master load-cell and read out system must be calibrated with weights at each test weight specified in § 89.306. The calibration weights must be traceable to within 0.1 percent of applicable national standards.

(2) Warm up the dynamometer following the equipment manufacturer's specifications.

(3) Attach the master load-cell and loading system.

(4) Load the dynamometer to a minimum of 6 equally spaced torque values as indicated by the master load-cell for each in-use range used.

(5) The in-use torque measurement must be within 2 percent of the torque measured by the master system for each load used.

(6) If the in-use torque is not within 2 percent of the master torque, adjust or repair the system. Repeat steps in paragraphs (c)(2) through (c)(5) of this section with the adjusted or repaired system.

(d) Calibrated resistors may not be used for engine flywheel torque transducer calibration, but may be used to span the transducer prior to engine testing.

(e) Perform other engine dynamometer system calibrations as dictated by good engineering practice.

[59 FR 31335, June 17, 1994. Redesignated and amended at 63 FR 56995, 57010, Oct. 23, 1998]

§ 89.308 Sampling system requirements for gaseous emissions.

(a) For each component (pump, sample line section, filters, and so forth) in the heated portion of the sampling system that has a separate source of power or heating element, use engineering judgment to locate the coolest portion of that component and monitor the temperature at that location. If several components are within an oven, then only the surface temperature of the component with the largest thermal mass and the oven temperature need be measured.

(b) If water is removed by condensation, the sample gas temperature shall be monitored within the water trap or the sample dewpoint shall be monitored downstream. In either case, the indicated temperature shall not exceed 7 °C.

[59 FR 31335, June 17, 1994. Redesignated and amended at 63 FR 56995, 57010, Oct. 23, 1998]

§ 89.309 Analyzers required for gaseous emissions.

(a) *Analyzers.* The following instruments are required for analyzing the measured gases:

(1) *Carbon Monoxide (CO) analysis.* (i) The carbon monoxide analyzer must be of the non-dispersive infrared (NDIR) absorption type.

(ii) The use of linearizing circuits is permitted.

(2) *Carbon Dioxide (CO_2) analysis.* (i) The carbon dioxide analyzer must be of the non-dispersive infrared (NDIR) absorption type.

(ii) The use of linearizing circuits is permitted.

(3) [Reserved]

(4) *Hydrocarbon (HC) analysis.* (i) The hydrocarbon analyzer must be of the heated flame ionization (HFID) type.

(ii) If the temperature of the exhaust gas at the sample probe is below 190 °C, the temperature of the valves, pipework, and so forth, must be controlled so as to maintain a wall temperature of 190 °C ±11 °C. If the temperature of the exhaust gas at the sample probe is above 190 °C, the temperature of the valves, pipework, and so forth, must be controlled so as to maintain a wall temperature greater than 180 °C.

(iii) The FID oven must be capable of maintaining temperature within 5.5 °C of the set point.

(iv) Fuel and burner air must conform to the specifications in § 89.312.

(v) The percent of oxygen interference must be less than 3 percent, as specified in § 89.319(d).

(5) *Oxides of nitrogen (NO_X) analysis.* (i) This analysis device must consist of the subsequent items, following the sample probe, in the given order:

(A) Pipework, valves, and so forth, controlled so as to maintain a wall temperature above 60 °C.

(B) A NO_2 to NO converter. The NO_2 to NO converter efficiency must be at least 90 percent.

(C) For raw analysis, an ice bath or other cooling device located after the NO_X converter (optional for dilute analysis).

(D) A chemiluminescent detector (CLD or HCLD).

(ii) The quench interference must be less than 3.0 percent as measured in § 89.318.

(b) Other gas analyzers yielding equivalent results may be used with advance approval of the Administrator.

(c) The following requirements must be incorporated in each system used for testing under this subpart.

(1) Carbon monoxide and carbon dioxide measurements must be made on a dry basis (for raw exhaust measurement only). Specific requirements for the means of drying the sample can be found in § 89.309(e).

(2) Calibration or span gases for the NO_X measurement system must pass through the NO_2 to NO converter.

(d) The electromagnetic compatibility (EMC) of the equipment must be on a level as to minimize additional errors.

(e) *Gas drying*. Chemical dryers are not an acceptable method of removing water from the sample. Water removal by condensation is acceptable. A water trap performing this function and meeting the specifications in § 89.308(b) is an acceptable method. Means other than condensation may be used only with prior approval from the Administrator.

[59 FR 31335, June 17, 1994. Redesignated and amended at 63 FR 56995, 57010, Oct. 23, 1998]

§ 89.310 Analyzer accuracy and specifications.

(a) *Measurement accuracy—general*. The analyzers must have a measuring range which allows them to measure the concentrations of the exhaust gas sample pollutants with the accuracies shown in Table 3 in Appendix A of this subpart.

(1) *Response time*. As necessary, measure and account for the response time of the analyzer.

(2) *Precision*. The precision of the analyzer must be, at worst, ±1 percent of full-scale concentration for each range used at or above 100 ppm (or ppmC) or ±2 percent for each range used below 100 ppm (or ppmC). The precision is defined as 2.5 times the standard deviation(s) of 10 repetitive responses to a given calibration or span gas.

(3) *Noise*. The analyzer peak-to-peak response to zero and calibration or span gases over any 10-second period must not exceed 2 percent of full-scale chart deflection on all ranges used.

(4) *Zero drift*. The analyzer zero-response drift during a 1-hour period must be less than 2 percent of full-scale chart deflection on the lowest range used. The zero-response is defined as the mean response including noise to a zero-gas during a 30-second time interval.

(5) *Span drift*. The analyzer span drift during a 1-hour period must be less than 2 percent of full-scale chart deflection on the lowest range used. The analyzer span is defined as the difference between the span-response and the zero-response. The span-response is defined as the mean response including noise to a span gas during a 30-second time interval.

(b) *Operating procedure for analyzers and sampling system*. Follow the start-up and operating instructions of the instrument manufacturer. Adhere to the minimum requirements given in § 89.314 to § 89.323.

(c) *Emission measurement accuracy—Bag sampling*. (1) Good engineering practice dictates that exhaust emission sample analyzer readings below 15 percent of full-scale chart deflection should generally not be used.

(2) Some high resolution read-out systems, such as computers, data loggers, and so forth, can provide sufficient accuracy and resolution below 15 percent of full scale. Such systems may be used provided that additional calibrations of at least 4 non-zero nominally equally spaced points, using good engineering judgement, below 15 percent of full scale are made to ensure the accuracy of the calibration curves. If a gas divider is used, the gas divider must conform to the accuracy requirements specified in § 89.312(c). The procedure in paragraph (c)(3) of this section may be used for calibration below 15 percent of full scale.

(3) The following procedure shall be followed:

(i) Span the analyzer using a calibration gas meeting the accuracy requirements of § 89.312(c), within the operating range of the analyzer, and at least 90% of full scale.

(ii) Generate a calibration over the full concentration range at a minimum of 6, approximately equally spaced, points (e.g. 15, 30, 45, 60, 75, and 90 percent of the range of concentrations provided by the gas divider). If a gas divider or blender is being used to calibrate the analyzer and the requirements of paragraph (c)(2) of this section are met, verify that a second calibration gas between 10 and 20 percent of full scale can be named within 2 percent of its certified concentration.

(iii) If a gas divider or blender is being used to calibrate the analyzer, input the value of a second calibration gas (a span gas may be used for the CO2 analyzer) having a named concentration between 10 and 20 percent of full scale. This gas shall be included on the calibration curve. Continue adding calibration points by dividing this gas until the requirements of paragraph (c)(2) of this section are met.

(iv) Fit a calibration curve per § 89.319 through § 89.322 for the full scale range of the analyzer using the calibration data obtained with both calibration gases.

(d) *Emission measurement accuracy—continuous sampling*. Analyzers used for continuous analysis must be operated such that the measured concentration falls between 15 and 100 percent of full-scale chart deflection. Exceptions to these limits are:

(1) The analyzer's response may be less than 15 percent or more than 100 percent of full scale if automatic range change circuitry is used and the limits for range changes are between 15 and 100 percent of full-scale chart deflection;

(2) The analyzer's response may be less than 15 percent of full scale if:

(i) Alternative (c)(2) of this section is used to ensure that the accuracy of the calibration curve is maintained below 15 percent; or

(ii) The full-scale value of the range is 155 ppm (or ppmC) or less.

[59 FR 31335, June 17, 1994. Redesignated and amended at 63 FR 56995, 57010, Oct. 23, 1998]

§ 89.311 Analyzer calibration frequency.

(a) Prior to initial use and after major repairs, bench check each analyzer (see § 89.315).

(b) Calibrations are performed as specified in §§ 89.319 through 89.324.

(c) At least monthly, or after any maintenance which could alter calibration, the following calibrations and checks are performed.

(1) Leak check the vacuum side of the system (see § 89.316).

(2) Check that the analysis system response time has been measured and accounted for.

(3) Verify that the automatic data collection system (if used) meets the requirements found in Table 3 in appendix A of this subpart.

(4) Check the fuel flow measurement instrument to insure that the specifications in Table 3 in appendix A of this subpart are met.

(d) Verify that all NDIR analyzers meet the water rejection ratio and the CO_2 rejection ratio as specified in § 89.318.

(e) Verify that the dynamometer test stand and power output instrumentation meet the specifications in Table 3 in appendix A of this subpart.

[59 FR 31335, June 17, 1994. Redesignated at 63 FR 56995, Oct. 23, 1998]

§ 89.312 Analytical gases.

(a) The shelf life of all calibration gases must not be exceeded. The expiration date of the calibration gases stated by the gas manufacturer shall be recorded.

(b) *Pure gases*. The required purity of the gases is defined by the contamination limits given below. The following gases must be available for operation:

(1) Purified nitrogen (Contamination ≤ 1 ppm C, ≤ 1 ppm CO, ≤ 400 ppm CO_2, ≤ 0.1 ppm NO)

(2) [Reserved]

(3) Hydrogen-helium mixture (40 ±2 percent hydrogen, balance helium) (Contamination ≤ 31 ppm C, ≤ 400 ppm CO)

(4) Purified synthetic air (Contamination ≤ 1 ppm C, ≤ 1 ppm CO, ≤ 400 ppm CO_2, ≤ 0.1 ppm NO) (Oxygen content between 18–21 percent vol.)

(c) *Calibration and span gases.* (1) Calibration gas values are to be derived from NIST Standard Reference Materials (SRM's) or other standardized gas samples and are to be single blends as listed in the following paragraph.

(2) Mixtures of gases having the following chemical compositions shall be available:

(i) C_3H_8 and purified synthetic air ;

(ii) C_3H_8 and purified nitrogen (optional for raw measurements);

(iii) CO and purified nitrogen;

(iv) NO_X and purified nitrogen (the amount of NO_2 contained in this calibration gas must not exceed 5 percent of the NO content);

(v) CO_2 and purified nitrogen.

(3) The true concentration of a span gas must be within ±2 percent of the NIST gas standard. The true concentration of a calibration gas must be within ±1 percent of the NIST gas standard. The use of precision blending devices (gas dividers) to obtain the required calibration gas concentrations is acceptable, provided that the blended gases are accurate to within ±1.5 percent of NIST gas standards, or other gas standards which have been approved by the Administrator. This accuracy implies that primary gases used (or blending) must be ''named'' to an accuracy of at least ±1 percent, traceable to NIST or other approved gas standards. All concentrations of calibration gas shall be given on a volume basis (volume percent or volume ppm).

(4) The gas concentrations used for calibration and span may also be obtained by means of a gas divider, either diluting with purified N_2 or diluting with purified synthetic air. The accuracy of the mixing device must be such that the concentration of the diluted gases may be determined to within ±2 percent.

(d) Oxygen interference check gases shall contain propane with 350 ppmC ±75 ppmC hydrocarbon. The three oxygen interference gases shall contain 21% ± 1% O_2, 10% ± 1% O_2, and 5% ± 1% O_2. The concentration value shall be determined to calibration gas tolerances by chromatographic analysis of total hydrocarbons plus impurities or by dynamic blending. Nitrogen shall be the predominant diluent with the balance oxygen.

(e) Fuel for the FID shall be a blend of 40 percent ±2 percent hydrogen with the balance being helium. The mixture shall contain less than 1 ppm equivalent carbon response; 98 to 100 percent hydrogen fuel may be used with advance approval of the Administrator.

(f) Hydrocarbon analyzer burner air. The concentration of oxygen for raw sampling must be within 1 mole percent of the oxygen concentration of the burner air used in the latest oxygen interference check (%O_2I). If the difference in oxygen concentration is greater than 1 mole percent, then the oxygen interference must be checked and, if necessary, the analyzer adjusted to meet the %O_2I requirements. The burner air must contain less than 2 ppmC hydrocarbon.

(g) Gases for the methane analyzer shall be single blends of methane using air as the diluent.

[59 FR 31335, June 17, 1994. Redesignated and amended at 63 FR 56995, 57010, Oct. 23, 1998]

§ 89.313 Initial calibration of analyzers.

(a) *Warming-up time.* The warming-up time should be according to the recommendations of the manufacturer. If not specified, a minimum of two hours shall be allowed for warming up the analyzers.

(b) *NDIR and HFID analyzer.* The NDIR analyzer shall be tuned and maintained according to the instrument manufacturer's instructions. The combustion flame of the HFID analyzer shall be optimized in order to meet the specifications in § 89.319(b)(2).

(c) *Zero setting and calibration.* (1) Using purified synthetic air (or nitrogen), the CO, CO_2, NO_X. and HC analyzers shall be set at zero.

(2) Introduce the appropriate calibration gases to the analyzers and the values recorded. The same gas flow rates shall be used as when sampling exhaust.

(d) *Rechecking of zero setting*. The zero setting shall be rechecked and the procedure described in paragraph (c) of this section repeated, if necessary.

[59 FR 31335, June 17, 1994. Redesignated at 63 FR 56995, Oct. 23, 1998]

§ 89.314 Pre- and post-test calibration of analyzers.

Each operating range used during the test shall be checked prior to and after each test in accordance with the following procedure. (A chronic need for parameter adjustment can indicate a need for instrument maintenance.):

(a) The calibration is checked by using a zero gas and a span gas whose nominal value is between 75 percent and 100 percent of full-scale, inclusive, of the measuring range.

(b) After the end of the final mode, a zero gas and the same span gas will be used for rechecking. As an option, the zero and span may be rechecked at the end of each mode or each test segment. The analysis will be considered acceptable if the difference between the two measuring results is less than 2 percent of full scale.

[59 FR 31335, June 17, 1994. Redesignated and amended at 63 FR 56995, 57011, Oct. 23, 1998]

§ 89.315 Analyzer bench checks.

(a) Prior to initial use and after major repairs verify that each analyzer complies with the specifications given in Table 3 in appendix A of this subpart.

(b) If a stainless steel NO_2 to NO converter is used, condition all new or replacement converters. The conditioning consists of either purging the converter with air for a minimum of 4 hours or until the converter efficiency is greater than 90 percent. The converter must be at operational temperature while purging. Do not use this procedure prior to checking converter efficiency on in-use converters.

[59 FR 31335, June 17, 1994. Redesignated at 63 FR 56995, Oct. 23, 1998]

§ 89.316 Analyzer leakage and response time.

(a) *Vacuum side leak check*. (1) Any location within the analysis system where a vacuum leak could affect the test results must be checked.

(2) The maximum allowable leakage rate on the vacuum side is 0.5 percent of the in-use flow rate for the portion of the system being checked. The analyzer flows and bypass flows may be used to estimate the in-use flow rates.

(3) The sample probe and the connection between the sample probe and valve V2 (see Figure 1 in appendix B of this subpart) may be excluded from the leak check.

(b) [Reserved]

(c) The response time shall be accounted for in all emission measurement and calculations.

[59 FR 31335, June 17, 1994. Redesignated and amended at 63 FR 56995, 57011, Oct. 23, 1998]

§ 89.317 NO_X converter check.

(a) Prior to its introduction into service, and monthly thereafter, the chemiluminescent oxides of nitrogen analyzer shall be checked for NO_2 to NO converter efficiency. Figure 2 in appendix B of this subpart is a reference for the following paragraphs.

(b) Follow good engineering practices for instrument start-up and operation. Adjust the analyzer to optimize performance.

(c) Zero the oxides of nitrogen analyzer with zero-grade air or zero-grade nitrogen.

(d) Connect the outlet of the NO_X generator to the sample inlet of the oxides of nitrogen analyzer which has been set to the most common operating range.

(e) Introduce into the NO_X generator analyzer-system an NO-in-nitrogen (N_2) mixture with an NO concentration equal to approximately 80 percent of the most common operating range. The NO_2 content of the gas mixture shall be less than 5 percent of the NO concentration.

(f) With the oxides of nitrogen analyzer in the NO mode, record the concentration of NO indicated by the analyzer.

(g) Turn on the NO_X generator O_2 (or air) supply and adjust the O_2 (or air) flow rate so that the NO indicated by the analyzer is about 10 percent less than indicated in paragraph (f) of this section. Record the concentration of NO in this $NO+O_2$ mixture.

(h) Switch the NO_X generator to the generation mode and adjust the generation rate so that the NO measured on the analyzer is 20 percent of that measured in paragraph (f) of this section. There must be at least 10 percent unreacted NO at this point. Record the concentration of residual NO.

(i) Switch the oxides of nitrogen analyzer to the NO_X mode and measure total NO_X. Record this value.

(j) Switch off the NO_X generator but maintain gas flow through the system. The oxides of nitrogen analyzer will indicate the NO_X in the $NO+O_2$ mixture. Record this value.

(k) Turn off the NO_X generator O_2 (or air) supply. The analyzer will now indicate the NO_X in the original NO-in-N_2 mixture. This value should be no more than 5 percent above the value indicated in paragraph (f) of this section.

[59 FR 31335, June 17, 1994. Redesignated and amended at 63 FR 56995, 57011, Oct. 23, 1998]

§ 89.318 Analyzer interference checks.

(a) Gases present in the exhaust other than the one being analyzed can interfere with the reading in several ways. Positive interference occurs in NDIR and PMD instruments when the interfering gas gives the same effect as the gas being measured, but to a lesser degree. Negative interference occurs in NDIR instruments by the interfering gas broadening the absorption band of the measured gas and in CLD instruments by the interfering gas quenching the radiation. The interference checks described in this section are to be made initially and after any major repairs that could affect analyzer performance.

(b) *CO analyzer water and CO_2 interference checks.* Prior to its introduction into service and annually thereafter, the NDIR carbon monoxide analyzer shall be checked for response to water vapor and CO_2.

(1) Follow good engineering practices for instrument start-up and operation. Adjust the analyzer to optimize performance on the most sensitive range to be used.

(2) Zero the carbon monoxide analyzer with either zero-grade air or zero-grade nitrogen.

(3) Bubble a mixture of 3 percent CO_2 in N_2 through water at room temperature and record analyzer response.

(4) An analyzer response of more than 1 percent of full scale for ranges above 300 ppm full scale or more than 3 ppm on ranges below 300 ppm full scale requires corrective action. (Use of conditioning columns is one form of corrective action which may be taken.)

(c) *NO_X analyzer quench check.* The two gases of concern for CLD (and HCLD) analyzers are CO_2 and water vapor. Quench responses to these two gases are proportional to their concentrations and, therefore, require test techniques to determine quench at the highest expected concentrations experienced during testing.

(1) *NO_X analyzer CO_2 quench check.* A CO_2 span gas having a concentration of 80 percent to 100 percent of full scale of the maximum operating range used during testing shall be passed through the CO_2 NDIR analyzer and the value recorded as *a*. It is diluted approximately 50 percent with NO span gas and then passed through the CO_2 NDIR and CLD (or HCLD), with the CO_2 and NO values recorded as *b* and *c* respectively. The CO_2 shall then be shut off and only the NO span gas passed through the CLD (or HCLD) and the NO value recorded as *d*. Percent CO_2 quench shall be calculated as follows and shall not exceed 3 percent:

$$\%\,CO_2\ \text{quench} = 100 \times \left(1 - \frac{(c \times a)}{(d \times a) - (d \times b)}\right) \times (a / b)$$

Where:

a = Undiluted CO_2 concentration (percent)
b = Diluted CO2 concentration (percent)
c = Diluted NO concentration (ppm)
d = Undiluted NO concentration (ppm)

(2) *NO_X analyzer water quench check.* (i) This check applies to wet measurements only. An NO span gas having a

concentration of 80 to 100 percent of full scale of a normal operating range shall be passed through the CLD (or HCLD) and the response recorded as D. The NO span gas shall then be bubbled through water at room temperature and passed through the CLD (or HCLD) and the analyzer response recorded as AR. Determine and record the bubbler absolute operating pressure and the bubbler water temperature. (It is important that the NO span gas contains minimal NO_2 concentration for this check. No allowance for absorption of NO_2 in water has been made in the following quench calculations. This test may be optionally run in the NO mode to minimize the effect of any NO_2 in the NO span gas.)

(ii) Calculations for water quench must consider dilution of the NO span gas with water vapor and scaling of the water vapor concentration of the mixture to that expected during testing. Determine the mixture's saturated vapor pressure (designated as *Pwb*) that corresponds to the bubbler water temperature. Calculate the water concentration (Z1, percent) in the mixture by the following equation:

$$Z1 = 100 \times \frac{Pwb}{GP}$$

where

GP = analyzer operating pressure (Pa)

(iii) Calculate the expected dilute NO span gas and water vapor mixture concentration (designated as *D1*) by the following equation:

$$D1 = D \times \left(1 - \frac{Z1}{100}\right)$$

(iv)(A) The maximum raw or dilute exhaust water vapor concentration expected during testing (designated as Wm) can be estimated from the CO_2 span gas (or as defined in the equation in this paragraph and designated as A) criteria in paragraph (c)(1) of this section and the assumption of a fuel atom H/C ratio of 1.8:1 as:

$Wm(\%)=0.9\times A(\%)$

Where:

A = maximum CO2 concentration expected in the sample system during testing.

(B) Percent water quench shall not exceed 3 percent and shall be calculated by:

$$\%\text{Water Quench} = 100 \times \frac{D1 - AR}{D1} \times \frac{Wm}{Z1}$$

[59 FR 31335, June 17, 1994. Redesignated and amended at 63 FR 56995, 57011, Oct. 23, 1998; 63 FR 58101, Oct. 29, 1998]

§ 89.319 Hydrocarbon analyzer calibration.

(a) The FID hydrocarbon analyzer shall receive the initial and periodic calibration as described in this section. The HFID used with petroleum-fueled diesel (compression-ignition) engines shall be operated to a set point ±5.5 °C between 185 and 197 °C.

(b) *Initial and periodic optimization of detector response.* Prior to introduction into service and at least annually thereafter, adjust the FID hydrocarbon analyzer for optimum hydrocarbon response as specified in this paragraph. Alternate methods yielding equivalent results may be used, if approved in advance by the Administrator.

(1) Follow good engineering practices for initial instrument start-up and basic operating adjustment using the appropriate fuel (see § 89.312(e)) and zero-grade air.

(2) Optimize the FID's response on the most common operating range. The response is to be optimized with respect to fuel pressure or flow. Efforts shall be made to minimize response variations to different hydrocarbon species that are expected to be in the exhaust. Good engineering judgment is

to be used to trade off optimal FID response to propane-in-air against reductions in relative responses to other hydrocarbons. A good example of trading off response on propane for relative responses to other hydrocarbon species is given in Society of Automotive Engineers (SAE) Paper No. 770141, ''Optimization of Flame Ionization Detector for Determination of Hydrocarbon in Diluted Automotive Exhausts''; author Glenn D. Reschke. It is also required that the response be set to optimum condition with respect to air flow and sample flow. Heated Flame Ionization Detectors (HFIDs) must be at their specified operating temperature. One of the following procedures is required for FID or HFID optimization:

(i) The procedure outlined in Society of Automotive Engineers (SAE) paper No. 770141, ''Optimization of a Flame Ionization Detector for Determination of Hydrocarbon in Diluted Automotive Exhausts''; author, Glenn D. Reschke. This procedure has been incorporated by reference at § 89.6.

(ii) The HFID optimization procedures outlined in 40 CFR part 1065, subpart D.

(iii) Alternative procedures may be used if approved in advance by the Administrator.

(iv) The procedures specified by the manufacturer of the FID or HFID.

(3) After the optimum flow rates have been determined, record them for future reference.

(c) *Initial and periodic calibration.* Prior to introduction into service, after any maintenance which could alter calibration, and monthly thereafter, the FID or HFID hydrocarbon analyzer shall be calibrated on all normally used instrument ranges using the steps in this paragraph (c). Use the same flow rate and pressures as when analyzing samples. Calibration gases shall be introduced directly at the analyzer, unless the ''overflow'' calibration option of 40 CFR part 1065, subpart F, for the HFID is taken. New calibration curves need not be generated each month if the existing curve can be verified as continuing to meet the requirements of paragraph (c)(3) of this section.

(1) Adjust analyzer to optimize performance.

(2) Zero the hydrocarbon analyzer with zero-grade air.

(3) Calibrate on each used operating range with propane-in-air (dilute or raw) or propane-in-nitrogen (raw) calibration gases having nominal concentrations starting between 10–15 percent and increasing in at least six incremental steps to 90 percent (e.g., 15, 30, 45, 60, 75, and 90 percent of that range) of that range. The incremental steps are to be spaced to represent good engineering practice. For each range calibrated, if the deviation from a least-squares best-fit straight line is 2 percent or less of the value at each data point, concentration values may be calculated by use of a single calibration factor for that range. If the deviation exceeds 2 percent at each nonzero data point and within ±0.3 percent of full scale on the zero, the best-fit non-linear equation which represents the data to within these limits shall be used to determine concentration.

(d) *Oxygen interference optimization (required for raw).* Choose a range where the oxygen interference check gases will fall in the upper 50 percent. Conduct the test, as outlined in this paragraph, with the oven temperature set as required by the instrument manufacturer. Oxygen interference check gas specifications are found in § 89.312(d).

(1) Zero the analyzer.

(2) Span the analyzer with the 21% oxygen interference gas specified in § 89.312(d).

(3) Recheck zero response. If it has changed more than 0.5 percent of full scale repeat paragraphs (d)(1) and (d)(2) of this section to correct problem.

(4) Introduce the 5 percent and 10 percent oxygen interference check gases.

(5) Recheck the zero response. If it has changed more ±1 percent of full scale, repeat the test.

(6) Calculate the percent of oxygen interference (designated as percent O_2I) for each mixture in paragraph (d)(4) of this section.

$$\text{percent } O_2I = ((B - C) \times 100)/B$$

Where:

A = hydrocarbon concentration (ppmC) of the span gas used in paragraph (d)(2) of this section.

B = hydrocarbon concentration (ppmC) of the oxygen interference check gases used in paragraph (d)(4) of this section.
C = analyzer response (ppmC) = A/D; where
D = (percent of full-scale analyzer response due to A) × (percent of full-scale analyzer response due to B)

[59 FR 31335, June 17, 1994. Redesignated and amended at 63 FR 56995, 57011, Oct. 23, 1998; 70 FR 40445, July 13, 2005]

§ 89.320 Carbon monoxide analyzer calibration.

(a) Calibrate the NDIR carbon monoxide as described in this section.

(b) *Initial and periodic interference check.* Prior to its introduction into service and annually thereafter, the NDIR carbon monoxide analyzer shall be checked for response to water vapor and CO_2 in accordance with § 318.96(b).

(c) *Initial and periodic calibration.* Prior to its introduction into service, after any maintenance which could alter calibration, and every two months thereafter, the NDIR carbon monoxide analyzer shall be calibrated. New calibration curves need not be generated every two months if the existing curve can be verified as continuing to meet the requirements of paragraph (c)(3) of this section.

(1) Adjust the analyzer to optimize performance.

(2) Zero the carbon monoxide analyzer with either zero-grade air or zero-grade nitrogen.

(3) Calibrate on each used operating range with carbon monoxide-in-N_2 calibration gases having nominal concentrations starting between 10 and 15 percent and increasing in at least six incremental steps to 90 percent (e.g., 15, 30, 45, 60, 75, and 90 percent) of that range. The incremental steps are to be spaced to represent good engineering practice. For each range calibrated, if the deviation from a least-squares best-fit straight line is 2 percent or less of the value at each non-zero data point and within ±0.3 percent of full scale on the zero, concentration values may be calculated by use of a single calibration factor for that range. If the deviation exceeds these limits, the best-fit non-linear equation which represents the data to within these limits shall be used to determine concentration.

(d) The initial and periodic interference, system check, and calibration test procedures specified in 40 CFR part 1065 may be used in lieu of the procedures specified in this section.

[59 FR 31335, June 17, 1994. Redesignated and amended at 63 FR 56995, 57012, Oct. 23, 1998; 70 FR 40445, July 13, 2005]

§ 89.321 Oxides of nitrogen analyzer calibration.

(a) The chemiluminescent oxides of nitrogen analyzer shall receive the initial and periodic calibration described in this section.

(b) Prior to its introduction into service, and monthly thereafter, the chemiluminescent oxides of nitrogen analyzer is checked for NO_2 to NO converter efficiency according to § 89.317.

(c) *Initial and periodic calibration.* Prior to its introduction into service, after any maintenance which could alter calibration, and monthly thereafter, the chemiluminescent oxides of nitrogen analyzer shall be calibrated on all normally used instrument ranges. New calibration curves need not be generated each month if the existing curve can be verified as continuing to meet the requirements of paragraph (c)(3) of this section. Use the same flow rate as when analyzing samples. Proceed as follows:

(1) Adjust analyzer to optimize performance.

(2) Zero the oxides of nitrogen analyzer with zero-grade air or zero-grade nitrogen.

(3) Calibrate on each normally used operating range with NO-in-N_2 calibration gases with nominal concentrations starting at between 10 and 15 percent and increasing in at least six incremental steps to 90 percent (e.g., 15, 30, 45, 60, 75, and 90 percent) of that range. The incremental steps are to be spaced to represent good engineering practice. For each range calibrated, if the deviation from a least-squares best-fit straight line is 2 percent or less of the value at each non-zero data point and within ±0.3 percent of full scale on the zero, concentration values may be calculated by use of a single calibration factor for that range. If the deviation exceeds these limits, the best-fit non-linear equation which represents the data to within these limits shall be used to determine concentration.

(d) The initial and periodic interference, system check, and calibration test procedures specified in 40 CFR part 1065 may be used in lieu of the procedures specified in this section.

[59 FR 31335, June 17, 1994. Redesignated and amended at 63 FR 56995, 57012, Oct. 23, 1998; 70 FR 40445, July 13, 2005]

§ 89.322 Carbon dioxide analyzer calibration.

(a) Prior to its introduction into service, after any maintenance which could alter calibration, and bi-monthly thereafter, the NDIR carbon dioxide analyzer shall be calibrated on all normally used instrument ranges. New calibration curves need not be generated each month if the existing curve can be verified as continuing to meet the requirements of paragraph (a)(3) of this section. Proceed as follows:

(1) Follow good engineering practices for instrument start-up and operation. Adjust the analyzer to optimize performance.

(2) Zero the carbon dioxide analyzer with either zero-grade air or zero-grade nitrogen.

(3) Calibrate on each normally used operating range with carbon dioxide-in-N_2 calibration or span gases having nominal concentrations starting between 10 and 15 percent and increasing in at least six incremental steps to 90 percent (e.g., 15, 30, 45, 60, 75, and 90 percent) of that range. The incremental steps are to be spaced to represent good engineering practice. For each range calibrated, if the deviation from a least-squares best-fit straight line is 2 percent or less of the value at each non-zero data point and within ±0.3 percent of full scale on the zero, concentration values may be calculated by use of a single calibration factor for that range. If the deviation exceeds these limits, the best-fit nonlinear equation which represents the data to within these limits shall be used to determine concentration.

(b) The initial and periodic interference, system check, and calibration test procedures specified in 40 CFR part 1065 may be used in lieu of the procedures in this section.

[59 FR 31335, June 17, 1994. Redesignated and amended at 63 FR 56995, 57012, Oct. 23, 1998; 70 FR 40445, July 13, 2005]

§ 89.323 NDIR analyzer calibration.

(a) *Detector optimization*. If necessary, follow the instrument manufacturer's instructions for initial start-up and basic operating adjustments.

(b) *Calibration curve*. Develop a calibration curve for each range used as follows:

(1) Zero the analyzer.

(2) Span the analyzer to give a response of approximately 90 percent of full-scale chart deflection.

(3) Recheck the zero response. If it has changed more than 0.5 percent of full scale, repeat the steps given in paragraphs (b)(1) and (b)(2) of this section.

(4) Record the response of calibration gases having nominal concentrations starting between 10 and 15 percent and increasing in at least six incremental steps to 90 percent of that range. The incremental steps are to be spaced to represent good engineering practice.

(5) Generate a calibration curve. The calibration curve shall be of fourth order or less, have five or fewer coefficients. If any range is within 2 percent of being linear a linear calibration may be used. Include zero as a data point. Compensation for known impurities in the zero gas can be made to the zero-data point. The calibration curve must fit the data points within 2 percent of point.

(6) Optional. A new calibration curve need not be generated if:

(i) A calibration curve conforming to paragraph (b)(5) of this section exists; or

(ii) The responses generated in paragraph (b)(4) of this section are within 1 percent of full scale or 2 percent of point, whichever is less, of the responses predicted by the calibration curve for the gases used in paragraph (b)(4) of this section.

(7) If multiple range analyzers are used, the lowest range used must meet the curve fit requirements below 15 percent of full scale.

[59 FR 31335, June 17, 1994. Redesignated at 63 FR 56995, Oct. 23, 1998]

§ 89.324 Calibration of other equipment.

(a) Other test equipment used for testing shall be calibrated as often as

required by the instrument manufacturer or necessary according to good practice.

(b) If a methane analyzer is used, the methane analyzer shall be calibrated prior to introduction into service and monthly thereafter:

(1) Follow the manufacturer's instructions for instrument startup and operation. Adjust the analyzer to optimize performance.

(2) Zero the methane analyzer with zero-grade air.

(3) Calibrate on each normally used operating range with CH_4 in air with nominal concentrations starting between 10 and 15 percent and increasing in at least six incremental steps to 90 percent (e.g., 15, 30, 45, 60, 75, and 90 percent) of that range. The incremental steps are to be spaced to represent good engineering practice. For each range calibrated, if the deviation from a least-squares best-fit straight line is 2 percent or less of the value at each non-zero data point and within ±0.3 percent of full scale on the zero, concentration values may be calculated by use of a single calibration factor for that range. If the deviation exceeds these limits, the best-fit nonlinear equation which represents the data to within these limits shall be used to determine concentration.

[63 FR 57013, Oct. 23, 1998]

§ 89.325 Engine intake air temperature measurement.

(a) Engine intake air temperature measurement must be made within 122 cm of the engine. The measurement location must be made either in the supply system or in the air stream entering the supply system.

(b) The temperature measurements shall be accurate to within ±2 °C.

[59 FR 31335, June 17, 1994. Redesignated at 63 FR 56995, Oct. 23, 1998]

§ 89.326 Engine intake air humidity measurement.

(a) *Humidity conditioned air supply.* Air that has had its absolute humidity altered is considered humidity- conditioned air. For this type of intake air supply, the humidity measurements must be made within the intake air supply system and after the humidity conditioning has taken place.

(b) *Nonconditioned air supply procedure.* Humidity measurements in nonconditioned intake air supply systems must be made in the intake air stream entering the supply system. Alternatively, the humidity measurements can be measured within the intake air supply stream.

[59 FR 31335, June 17, 1994. Redesignated at 63 FR 56995, Oct. 23, 1998]

§ 89.327 Charge cooling.

For engines with an air-to-air intercooler (or any other low temperature charge air cooling device) between the turbocharger compressor and the intake manifold, follow SAE J1937. This procedure has been incorporated by reference. See § 89.6. The temperature of the cooling medium and the temperature of the charge air shall be monitored and recorded.

[59 FR 31335, June 17, 1994. Redesignated at 63 FR 56995, Oct. 23, 1998]

§ 89.328 Inlet and exhaust restrictions.

(a) The manufacturer is liable for emission compliance over the full range of restrictions that are specified by the manufacturer for that particular engine.

(b) Perform testing at the following inlet and exhaust restriction settings.

(1) Equip the test engine with an air inlet system presenting an air inlet restriction within 5 percent of the upper limit at maximum air flow, as specified by the engine manufacturer for a clean air cleaner. A system representative of the installed engine may be used. In other cases a test shop system may be used.

(2) The exhaust backpressure must be within 5 percent of the upper limit at maximum declared power, as specified by the engine manufacturer. A system representative of the installed engine may be used. In other cases a test shop system may be used.

[59 FR 31335, June 17, 1994. Redesignated and amended at 63 FR 56995, 57013, Oct. 23, 1998]

§ 89.329 Engine cooling system.

An engine cooling system is required with sufficient capacity to maintain

the engine at normal operating temperatures as prescribed by the engine manufacturer.

[59 FR 31335, June 17, 1994. Redesignated at 63 FR 56995, Oct. 23, 1998]

§ 89.330 Lubricating oil and test fuels.

(a) *Lubricating oil.* Use the engine lubricating oil for testing that meets the requirements as specified by the manufacturer for a particular engine and intended usage. Record the specifications of the lubricating oil used for the test.

(b) *Test fuels.* (1) Use diesel fuels for testing which are clean and bright, with pour and cloud points adequate for operability. The diesel fuel may contain nonmetallic additives as follows: Cetane improver, metal deactivator, antioxidant, dehazer, antirust, pour depressant, dye, dispersant, and biocide.

(2) Use petroleum fuel meeting the specifications in Table 4 in Appendix A of this subpart, or substantially equivalent specifications approved by the Administrator, for exhaust emission testing. The grade of diesel fuel used must be commercially designated as ''Type 2–D'' grade diesel fuel and recommended by the engine manufacturer.

(3) Testing of Tier 1 and Tier 2 engines rated under 37 kW and Tier 2 and Tier 3 engines rated at or above 37 kW that is conducted by the Administrator shall be performed using test fuels that meet the specifications in Table 4 in Appendix A of this subpart and that have a sulfur content no higher than 0.20 weight percent.

(c) Other fuels may be used for testing provided they meet the following qualifications:

(1) They are commercially available;

(2) Information acceptable to the Administrator is provided to show that only the designated fuel would be used in customer service;

(3) Use of a fuel listed under paragraph (b) of this section would have a detrimental effect on emissions or durability; and

(4) Fuel specifications are approved in writing by the Administrator prior to the start of testing.

(d) Report the specification range of the fuel to be used under paragraphs (b)(2) and (c)(1) through (c)(4) of this section in the application for certification in accordance with § 89.115 (a)(8).

(e) *Low-sulfur test fuel.* (1) Upon request, for engines rated at or above 75 kW in model years 2006 or 2007, the diesel test fuel may be the low-sulfur diesel test fuel specified in 40 CFR part 1065, subject to the provisions of this paragraph (e)(1).

(i) To use this option, the manufacturer must—

(A) Ensure that ultimate purchasers of equipment using these engines are informed that the use of fuel meeting the 500 ppm specification is recommended.

(B) Recommend to equipment manufacturers that a label be applied at the fuel inlet recommending 500 ppm fuel.

(ii) None of the engines in the engine family may employ sulfur-sensitive technologies.

(iii) For engines rated at or above 130 kW, this option may be used in 2006 and 2007. For engines rated at or above 75 kW and under 130 kW, this option may be used only in 2007.

(2) For model years 2008 through 2010, except as otherwise provided, the diesel test fuel shall be the low-sulfur diesel test fuel specified in 40 CFR part 1065.

(3) The diesel test fuel shall be the ultra low-sulfur diesel test fuel specified in 40 CFR part 1065 for model years 2011 and later.

(4) For model years 2007 through 2010 engines that use sulfur-sensitive emission-control technology, the diesel test fuel is the ultra low-sulfur fuel specified in 40 CFR part 1065 if the manufacturer demonstrates that the in-use engines will use only fuel with 15 ppm or less of sulfur.

(5) Instead of the test fuels described in paragraphs (e)(2) through (4) of this section, for model years 2008 and later, manufacturers may use the test fuel described in appendix A of this subpart. In such cases, the test fuel described in appendix A of this subpart shall be the test fuel for all manufacturer and EPA testing.

[59 FR 31335, June 17, 1994. Redesignated and amended at 63 FR 56995, 57013, Oct. 23, 1998; 69 FR 39213, June 29, 2004]

§ 89.331 Test conditions.

(a) *General requirements.* Calculate all volumes and volumetric flow rates at

standard conditions for temperature and pressure (0 °C and 101.3 kPa), and these conditions must be used consistently throughout all calculations.

(b) *Engine test conditions*. Measure the absolute temperature (designated as *T* and expressed in Kelvin) of the engine air at the inlet to the engine, and the dry atmospheric pressure (designated as *p* and expressed in kPa), and determine the parameter *f* according to the following provisions:

(1) Naturally aspirated and mechanically supercharged engines:

$$f = \frac{99}{p_s} \times \left(\frac{T}{298}\right)^{0.7}$$

(2) Turbocharged engine with or without cooling of inlet air:

$$f = \left(\frac{99}{p_s}\right)^{0.7} \times \left(\frac{T}{298}\right)^{1.5}$$

(c) For a test to be recognized as valid, the parameter *f* shall be between the limits as shown below:

$$0.98 < f < 1.02$$

[59 FR 31335, June 17, 1994. Redesignated at 63 FR 56995, Oct. 23, 1998]

APPENDIX A TO SUBPART D OF PART 89—TABLES

TABLE 1—ABBREVIATIONS USED IN SUBPART D

CLD	Chemiluminescent detector.
CO	Carbon monoxide.
CO_2	Carbon dioxide.
HC	Hydrocarbons.
HCLD	Heated chemiluminescent detector.
HFID	Heated flame ionization detector.
GC	Gas chromatograph.
NDIR	Non-dispersive infra-red analyzer.
NIST	National Institute for Standards and Testing.
NO	Nitric Oxide.
NO_2	Nitrogen Dioxide.
NO_X	Oxides of nitrogen.
O_2	Oxygen.

TABLE 2—SYMBOLS USED IN SUBPARTS D AND E

Symbol	Term	Unit
conc	Concentration (ppm by volume)	ppm
f	Engine specific parameter considering atmospheric conditions	
F_{FCB}	Fuel specific factor for the carbon balance calculation	
F_{FD}	Fuel specific factor for exhaust flow calculation on dry basis	
F_{FH}	Fuel specific factor representing the hydrogen to carbon ratio	
F_{FW}	Fuel specific factor for exhaust flow calculation on wet basis	
FR	Rate of fuel consumed	g/h
G_{AIRW}	Intake air mass flow rate on wet basis	kg/h
G_{AIRD}	Intake air mass flow rate on dry basis	kg/h
G_{EXHW}	Exhaust gas mass flow rate on wet basis	kg/h
G_{Fuel}	Fuel mass flow rate	kg/h
H	Absolute humidity (water content related to dry air)	g/kg
i	Subscript denoting an individual mode	
K_H	Humidity correction factor	
L	Percent torque related to maximum torque for the test mode	%
mass	Pollutant mass flow	g/h
$n_{d,i}$	Engine speed (average at the i'th mode during the cycle)	1/min
P_s	Dry atmospheric pressure	kPa
P_d	Test ambient saturation vapor pressure at ambient temperature	kPa
P	Observed brake power output uncorrected	kW
P_{AUX}	Declared total power absorbed by auxiliaries fitted for the test	kW
P_M	Maximum power measured at the test speed under test conditions	kW
P_i	$P_i = P_{M,i} + P_{AUX,i}$	
P_B	Total barometric pressure (average of the pre-test and post-test values)	kPa
P_v	Saturation pressure at dew point temperature	kPa
R_a	Relative humidity of the ambient air	%
S	Dynamometer setting	kW
T	Absolute temperature at air inlet	K
T_{be}	Air temperature after the charge air cooler (if applicable) (average)	K
T_{cout}	Coolant temperature outlet (average)	K
T_{Dd}	Absolute dewpoint temperature	K
$T_{d,i}$	Torque (average at the i'th mode during the cycle)	N-m
T_{SC}	Temperature of the intercooled air	K
$T_{ref.}$	Reference temperature	K
V_{EXHD}	Exhaust gas volume flow rate on dry basis	m^3/h
V_{AIRW}	Intake air volume flow rate on wet basis	m^3/h
P_B	Total barometric pressure	kPa
V_{EXHW}	Exhaust gas volume flow rate on wet basis	m^3/h
WF	Weighing factor	

TABLE 2—SYMBOLS USED IN SUBPARTS D AND E—Continued

Symbol	Term	Unit
WF_E	Effective weighing factor	

TABLE 3—MEASUREMENT ACCURACY AND CALIBRATION FREQUENCY

No.	Item	Calibration accuracy [1]	Calibration frequency
1	Engine speed	±2%	30 days.
2	Torque	Larger of ±2% of point or ±1% of engine maximum.	30 days.
3	Fuel consumption (raw measurement)	±2% of engine maximum	30 days.
4	Air consumption (raw measurement)	±2% of engine maximum	As required.
5	Coolant temperature	±2°K	As required.
6	Lubricant temperature	±2°K	As required.
7	Exhaust backpressure	±1.0% of engine maximum	As required.
8	Inlet depression	1.0% of engine maximum	As required.
9	Exhaust gas temperature	±15°K	As required.
10	Air inlet temperature (combustion air)	±2°K	As required.
11	Atmospheric pressure	±0.5%	As required.
12	Humidity (combustion air) (g of H_2O/Kg of dry air)	±0.5	As required.
13	Fuel temperature	±2°K	As required.
14	Temperature with regard to dilution tunnel	±2°K	As required.
15	Dilution air humidity (g of H_2O/Kg of dry air)	±0.5	As required.
16	HC analyzer	±2%	Monthly or as required.
17	CO analyzer	±2%	Once per 60 days or as required.
18	NO_X analyzer	±2%	Monthly or as required.
19	Methane analyzer	±2%	Monthly or as required.
20	NO_X converter efficiency check	90%	Monthly.
21	CO_2 analyzer	±2%	Once per 60 days or as required.

[1] All accuracy requirements pertain to the final recorded value which is inclusive of the data acquisition system.

TABLE 4—FEDERAL TEST FUEL SPECIFICATIONS

Item	Procedure (ASTM) [1]	Value (type 2–D)
Cetane	D613–95	40–48
Distillation Range:		
IBP, °C	D86–97	171–204
10% point, °C	86–97	204–238
50% point, °C	86–97	243–282
90% point, °C	86–97	293–332
EP, °C	86–97	321–366
Gravity, API	D287–92	32–37
Total Sulfur, %mass	D129–95 or D2622–98	0.03–0.40
Hydrocarbon composition:		
Aromatics, %vol	D1319–98 or D5186–96	[2] 10
Paraffins, Naphthenes, Olefins	D1319–98	([3])
Flashpoint, °C (minimum)	D93–97	54
Viscosity @ 38°C, Centistokes	D445–97	2.0–3.2

[1] All ASTM procedures in this table have been incorporated by reference. See § 89.6.
[2] Minimum.
[3] Remainder.

[63 FR 57013, Oct. 23, 1998]

APPENDIX B TO SUBPART D OF PART 89—FIGURES

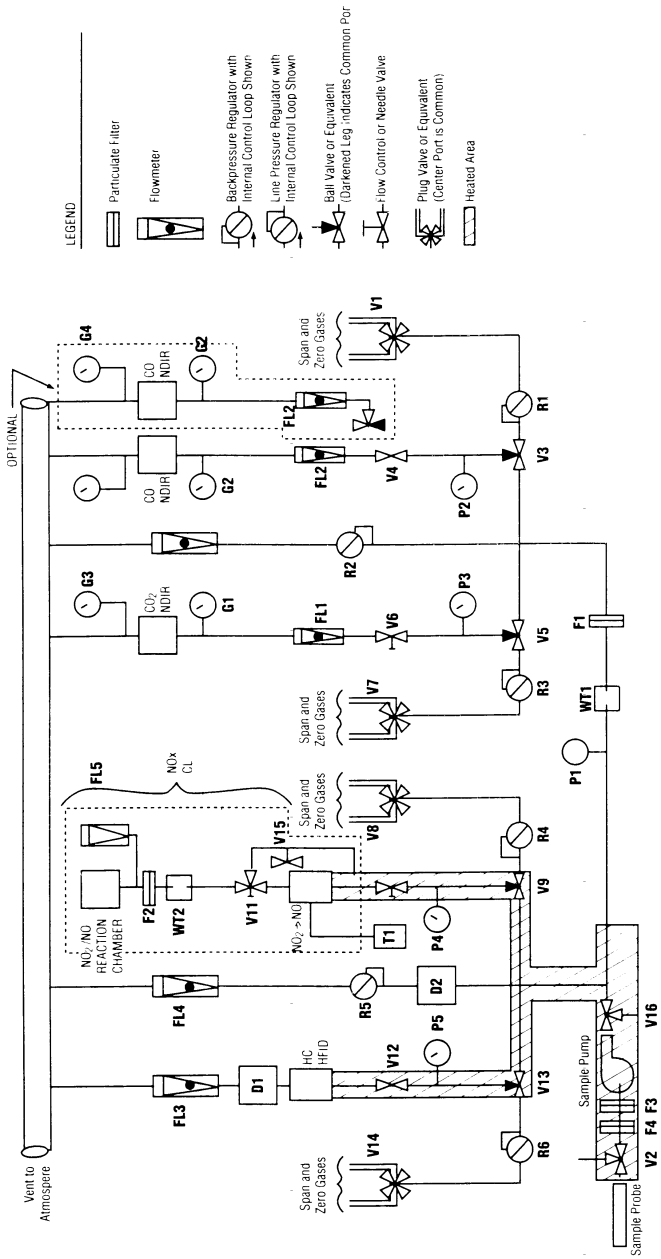

Figure 1. — Exhaust Gas Sampling and Analytical Train

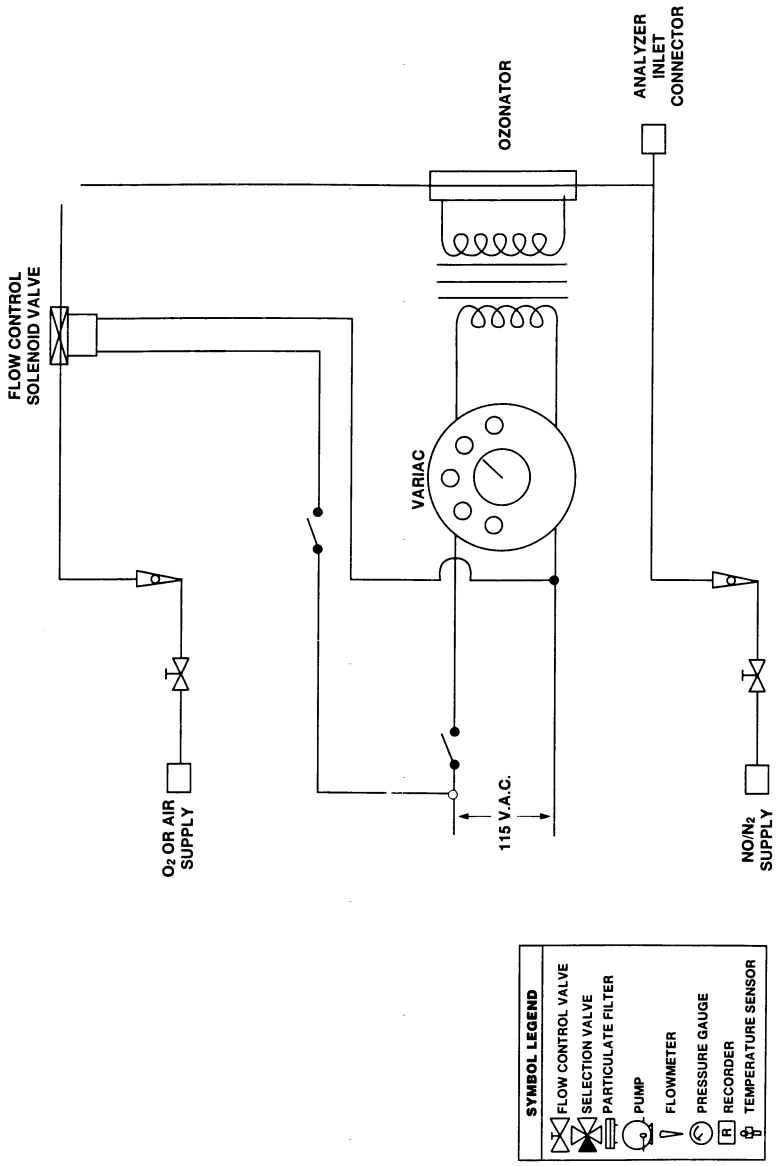

Figure 2. — NOx Converter Efficiency Detector

Subpart E—Exhaust Emission Test Procedures

§ 89.401 Scope; applicability.

(a) This subpart describes the procedures to follow in order to perform exhaust emission tests on new nonroad compression-ignition engines subject to the provisions of subpart B of this part.

(b) Exhaust gases, either raw or dilute, are sampled while the test engine is operated using the appropriate test cycle on an engine dynamometer. The

exhaust gases receive specific component analysis determining concentration of pollutant, exhaust volume, the fuel flow (raw analysis), and the power output during each mode. Emissions are reported as grams per kilowatt hour (g/kW-hr).

(c) Requirements for emission test equipment and calibrating this equipment are found in subpart D of this part.

[59 FR 31335, June 17, 1994. Redesignated and amended at 63 FR 56995, 57015, Oct. 23, 1998]

§ 89.402 Definitions.

The definitions in subpart A of this part apply to this subpart. For terms not defined in this part, the definitions in 40 CFR part 86, subparts A, D, I, and N, apply to this subpart.

[63 FR 57015, Oct. 23, 1998]

§ 89.403 Symbols/abbreviations.

(a) The abbreviations in § 86.094–3 or § 89.3 of this chapter apply to this subpart.

(b) The abbreviations in Table 1 in appendix A to subpart D also apply to this subpart. Some abbreviations from § 89.3 have been included for the convenience of the reader.

(c) The symbols in Table 2 in appendix A to subpart D apply to this subpart.

[59 FR 31335, June 17, 1994. Redesignated at 63 FR 56996, Oct. 23, 1998]

§ 89.404 Test procedure overview.

(a) The test consists of prescribed sequences of engine operating conditions to be conducted on an engine dynamometer. The exhaust gases, generated raw or dilute during engine operation, are sampled for specific component analysis through the analytical train. The test is applicable to engines equipped with catalytic or direct-flame afterburners, induction system modifications, or other systems, or to uncontrolled engines.

(b) The test is designed to determine the brake-specific emissions of hydrocarbons, carbon monoxide, oxides of nitrogen, and particulate matter. For more information on particulate matter sampling see § 89.112(c). The test cycles consist of various steady-state operating modes that include different combinations of engine speeds and loads. These procedures require the determination of the concentration of each pollutant, exhaust volume, the fuel flow (raw analysis), and the power output during each mode. The measured values are weighted and used to calculate the grams of each pollutant emitted per kilowatt hour (g/kW-hr).

(c)(1) When an engine is tested for exhaust emissions, the complete engine shall be tested with all emission control devices installed and functioning.

(2) On air-cooled engines, the fan shall be installed.

(3) Additional accessories (for example, oil cooler, alternators, or air compressors) may be installed but such accessory loading will be considered parasitic in nature and observed power shall be used in the emission calculation.

(d) All emission control systems installed on or incorporated in the application must be functioning during all procedures in this subpart. In cases of component malfunction or failure, maintenance to correct component failure or malfunction must be authorized in accordance with § 86.094–25 of this chapter.

[59 FR 31335, June 17, 1994. Redesignated and amended at 63 FR 56995, 57015, Oct. 23, 1998]

§ 89.405 Recorded information.

(a) The information described in this section must be recorded, where applicable, for each test.

(b) *Engine description and specification.* A copy of the information specified in this paragraph must accompany each engine sent to the Administrator for compliance testing. The manufacturer need not record the information specified in this paragraph for each test if the information, with the exception of paragraphs (b)(3) and (b)(9) of this section, is included in the manufacturer's application for certification.

(1) Engine-system combination.

(2) Engine identification numbers.

(3) Number of hours of operation accumulated on engine.

(4) Rated maximum horsepower and torque.

(5) Maximum horsepower and torque speeds.

(6) Engine displacement.

(7) Governed speed.

(8) Idle rpm.

(9) Fuel consumption at maximum power and torque.

(10) Maximum air flow.

(11) Air inlet restriction.

(12) Exhaust pipe diameter(s).

(13) Maximum exhaust system backpressure.

(c) *Test data; general.* (1) Engine-system combination.

(2) Engine identification number.

(3) Instrument operator.

(4) Engine operator.

(5) Number of hours of operation accumulated on the engine prior to beginning the warm-up portion of the test.

(6) Fuel identification.

(7) Date of most recent analytical assembly calibration.

(8) All pertinent instrument information such as tuning, gain, serial numbers, detector number, and calibration curve numbers. As long as this information is available for inspection by the Administrator, it may be summarized by system number or analyzer identification numbers.

(d) *Test data; pre-test.* (1) Date and time of day.

(2) Test number.

(3) Intermediate speed and rated speed as defined in § 89.2 and maximum observed torque for these speeds.

(4) Recorder chart or equivalent. Identify the zero traces for each range used, and span traces for each range used.

(5) Air temperature after and pressure drop across the charge air cooler (if applicable) at maximum observed torque and rated speed.

(e) *Test data; modal.* (1) Recorder chart or equivalent. Identify for each test mode the emission concentration traces and the associated analyzer range(s). Identify the start and finish of each test.

(2) Observed engine torque.

(3) Observed engine rpm.

(4) Record engine torque and engine rpm continuously during each mode with a chart recorder or equivalent recording device.

(5) Intake air flow (for raw mass flow sampling method only) and depression for each mode.

(6) Engine intake air temperature at the engine intake or turbocharger inlet for each mode.

(7) Mass fuel flow (for raw sampling) for each mode.

(8) Engine intake humidity.

(9) Coolant temperature outlet.

(10) Engine fuel inlet temperature at the pump inlet.

(f) *Test data; post-test.* (1) Recorder chart or equivalent. Identify the zero traces for each range used and the span traces for each range used. Identify hangup check, if performed.

(2) Total number of hours of operation accumulated on the engine.

[59 FR 31335, June 17, 1994. Redesignated and amended at 63 FR 56995, 57015, Oct. 23, 1998]

§ 89.406 Pre-test procedures.

(a) Allow a minimum of 30 minutes warmup in the standby or operating mode prior to spanning the analyzers.

(b) Replace or clean the filter elements and then vacuum leak check the system per § 89.316(a). Allow the heated sample line, filters, and pumps to reach operating temperature.

(c) Perform the following system checks:

(1) Check the sample-line temperatures (see § 89.309(a)(4)(ii) and (a)(5)(i)(A)).

(2) Check that the system response time has been accounted for prior to sample collection data recording.

(3) A hang-up check is permitted, but is optional.

(d) Check analyzer zero and span at a minimum before and after each test. Further, check analyzer zero and span any time a range change is made or at the maximum demonstrated time span for stability for each analyzer used.

(e) Check system flow rates and pressures.

[59 FR 31335, June 17, 1994. Redesignated and amended at 63 FR 56995, 57015, Oct. 23, 1998]

§ 89.407 Engine dynamometer test run.

(a) Measure and record the temperature of the air supplied to the engine, the fuel temperature, the intake air humidity, and the observed barometric pressure during the sampling for each mode. The fuel temperature shall be less than or equal to 43C during the sampling for each mode.

(b) The governor and fuel system shall have been adjusted to provide engine performance at the levels reported in the application for certification required under § 89.115.

(c) The following steps are taken for each test:

(1) Install instrumentation and sample probes as required.

(2) Perform the pre-test procedure as specified in § 89.406.

(3) Read and record the general test data as specified in § 89.405(c).

(4) Start cooling system.

(5) Precondition (warm up) the engine in the following manner:

(i) For variable-speed engines:

(A) Operate the engine at idle for 2 to 3 minutes;

(B) Operate the engine at approximately 50 percent power at the peak torque speed for 5 to 7 minutes;

(C) Operate the engine at rated speed and maximum horsepower for 25 to 30 minutes;

(ii) For constant-speed engines:

(A) Operate the engine at minimum load for 2 to 3 minutes;

(B) Operate the engine at 50 percent load for 5 to 7 minutes;

(C) Operate the engine at maximum load for 25 to 30 minutes;

(iii) Optional. It is permitted to precondition the engine at rated speed and maximum horsepower until the oil and water temperatures are stabilized. The temperatures are defined as stabilized if they are maintained within 2 percent of point on an absolute basis for 2 minutes. The engine must be operated a minimum of 10 minutes for this option. This optional procedure may be substituted for the procedure in paragraph (c)(5)(i)or (c)(5)(ii) of this section;

(iv) Optional. If the engine has been operating on service accumulation for a minimum of 40 minutes, the service accumulation may be substituted for the procedure in paragraphs (c)(5)(i) through (iii) of this section.

(6) Read and record all pre-test data specified in § 89.405(d).

(7) Start the test cycle (see § 89.410) within 20 minutes of the end of the warmup. (See paragraph (c)(13) of this section.) A mode begins when the speed and load requirements are stabilized to within the requirements of § 89.410(b). A mode ends when valid emission sampling for that mode ends. For a mode to be valid, the speed and load requirements must be maintained continuously during the mode. Sampling in the mode may be repeated until a valid sample is obtained as long the speed and torque requirements are met.

(8) Calculate the torque for any mode with operation at rated speed.

(9) During the first mode with intermediate speed operation, if applicable, calculate the torque corresponding to 75 and 50 percent of the maximum observed torque for the intermediate speed.

(10) Record all modal data specified in § 89.405(e) during a minimum of the last 60 seconds of each mode.

(11) Record the analyzer(s) response to the exhaust gas during the a minimum of the last 60 seconds of each mode.

(12) Test modes may be repeated, as long as the engine is preconditioned by running the previous mode. In the case of the first mode of any cycle, precondition according to paragraph (c)(5) of this section.

(13) If a delay of more than 20 minutes, but less than 4 hours, occurs between the end of one mode and the beginning of another mode, precondition the engine by running the previous mode. If the delay exceeds 4 hours, the test shall include preconditioning (begin at paragraph (c)(2) of this section).

(14) The speed and load points for each mode are listed in Tables 1 through 4 of Appendix B of this subpart. The engine speed and load shall be maintained as specified in § 89.410(b).

(15) If at any time during a test mode, the test equipment malfunctions or the specifications in paragraph (c)(14) of this section are not met, the test mode is void and may be aborted. The test mode may be restarted by preconditioning with the previous mode.

(16) Fuel flow and air flow during the idle load condition may be determined just prior to or immediately following the dynamometer sequence, if longer times are required for accurate measurements.

(d) *Exhaust gas measurements.* (1) Measure HC, CO, CO_2, and NO_X concentrations in the exhaust sample. Use the same units and modal calculations

as for your other results to report a single weighted value for CO_2; round CO_2 to the nearest 1 g/kW-hr.

(2) Each analyzer range that may be used during a test mode must have the zero and span responses recorded prior to the execution of the test. Only the zero and span for the range(s) used to measure the emissions during the test are required to be recorded after the completion of the test.

(3) It is permissible to change filter elements between test modes.

(4) A leak check is permitted between test segments.

(5) A hangup check is permitted between test segments.

(6) If, during the emission measurement portion of a test segment, the value of the gauges downstream of the NDIR analyzer(s) *G3* or *G4* (see Figure 1 in appendix B to subpart D) differs by more than ±0.5 kPa from the pretest value, the test segment is void.

[59 FR 31335, June 17, 1994. Redesignated and amended at 63 FR 56996, 57015, Oct. 23, 1998; 74 FR 56374, Oct. 30, 2009]

§ 89.408 Post-test procedures.

(a) A hangup check is recommended at the completion of the last test mode using the following procedure:

(1) Within 30 seconds introduce a zero-grade gas or room air into the sample probe or valve *V2* (see Figure 1 in appendix B to subpart D) to check the ''hangup zero'' response. Simultaneously start a time measurement.

(2) Select the lowest HC range used during the test.

(3) Within four minutes of beginning the time measurement in paragraph (a)(1) of this section, the difference between the span-zero response and the hangup zero response shall not be greater than 5.0 percent of full scale or 10 ppmC whichever is greater.

(b) Begin the analyzer span checks within 6 minutes after the completion of the last mode in the test. Record for each analyzer the zero and span response

(c) If during the test, the filter element(s) were replaced or cleaned, as of § 89.316(a), the test is void.

(d) Record the post-test data specified in § 89.405(f).

(e) For a valid test, the zero and span checks performed before and after each test for each analyzer must meet the following requirements:

(1) The span drift (defined as the change in the difference between the zero response and the span response) must not exceed 3 percent of full-scale chart deflection for each range used.

(2) The zero response drift must not exceed 3 percent of full-scale chart deflection.

[59 FR 31335, June 17, 1994. Redesignated and amended at 63 FR 56996, 57016, Oct. 23, 1998]

§ 89.409 Data logging.

(a) A computer or any other automatic data processing device(s) may be used as long as the system meets the requirements of this subpart.

(b) Determine from the data collection records the analyzer responses corresponding to the end of each mode.

(c) Record data at a minimum of once every 5 seconds.

(d) Determine the final value for CO_2, CO, HC, and NO_X concentrations by averaging the concentration of each point taken during the sample period for each mode.

(e) For purposes of this section, calibration data includes calibration curves, linearity curves, span-gas responses, and zero-gas responses.

[59 FR 31335, June 17, 1994. Redesignated at 63 FR 56996, Oct. 23, 1998]

§ 89.410 Engine test cycle.

(a) Emissions shall be measured using one of the test cycles specified in tables 1 through 4 of appendix B of this subpart, subject to the provisions of paragraphs (a)(1) through (a)(4) of this section. These cycles shall be used to test engines on a dynamometer.

(1) The 8-mode test cycle described in table 1 of appendix B of this subpart shall be used for all engines, except constant speed engines, engines rated under 19 kW, and propulsion marine diesel engines.

(2) The 5-mode test cycle described in table 2 of appendix B of this subpart shall be used for constant-speed engines as defined in § 89.2. Any engine certified under this test cycle must meet the labeling requirements of § 89.110(b)(11).

(3) The 6-mode test cycle described in table 3 of appendix B of this subpart

shall be used for variable speed engines rated under 19 kW.

(4) Notwithstanding the provisions of paragraphs (a)(1) through (a)(3) of this section, the 4-mode test cycle described in table 4 of appendix B of this subpart shall be used for propulsion marine diesel engines.

(5) Notwithstanding the provisions of paragraphs (a)(1) through (a)(4) of this section:

(i) Manufacturers may use the 8-mode test cycle described in table 1 of appendix B of this subpart for:

(A) Constant speed engines, or variable speed engines rated under 19 kW; or

(B) Propulsion marine diesel engines, provided the propulsion marine diesel engines are certified in an engine family that includes primarily non-marine diesel engines, and the manufacturer obtains advance approval from the Administrator.

(ii) The Administrator may use the 8-mode test cycle specified in table 1 of appendix B of this subpart during testing of any engine which was certified based on emission data collected from that test cycle.

(b) During each non-idle mode, hold the specified load to within 2 percent of the engine maximum value and speed to within ±2 percent of point. During each idle mode, speed must be held within the manufacturer's specifications for the engine, and the throttle must be in the fully closed position and torque must not exceed 5 percent of the peak torque value of mode 5.

(c) For any mode except those involving either idle or full-load operation, if the operating conditions specified in paragraph (b) of this section cannot be maintained, the Administrator may authorize deviations from the specified load conditions. Such deviations shall not exceed 10 percent of the maximum torque at the test speed. The minimum deviations above and below the specified load necessary for stable operation shall be determined by the manufacturer and approved by the Administrator prior to the test run.

(d) Power generated during the idle mode may not be included in the calculation of emission results.

(e) Manufacturers may optionally use the ramped-modal duty cycles corresponding to the discrete-mode duty cycles specified in this section, as described in 40 CFR 1039.505.

[59 FR 31335, June 17, 1994. Redesignated and amended at 63 FR 56996, 57016, Oct. 23, 1998; 70 FR 40445, July 13, 2005]

§ 89.411 Exhaust sample procedure—gaseous components.

(a) *Automatic data collection equipment requirements.* The analyzer response may be read by automatic data collection (ADC) equipment such as computers, data loggers, and so forth. If ADC equipment is used, the following is required:

(1) For bag sample analysis, the analyzer response must be stable at greater than 99 percent of the final reading for the dilute exhaust sample bag. A single value representing the average chart deflection over a 10-second stabilized period shall be stored.

(2) For continuous analysis systems, a single value representing the average integrated concentration over a cycle shall be stored.

(3) The chart deflections or average integrated concentrations required in paragraphs (a)(1) and (a)(2) of this section may be stored on long-term computer storage devices such as computer tapes, storage discs, punch cards, and so forth, or they may be printed in a listing for storage. In either case a chart recorder is not required and records from a chart recorder, if they exist, need not be stored.

(4) If ADC equipment is used to interpret analyzer values, the ADC equipment is subject to the calibration specifications of the analyzer as if the ADC equipment is part of analyzer system.

(b) Data records from any one or a combination of analyzers may be stored as chart recorder records.

(c) *Bag sample analysis.* For bag sample analysis perform the following sequence:

(1) Warm up and stabilize the analyzers; clean and/or replace filter elements, conditioning columns (if used), and so forth, as necessary.

(2) Obtain a stable zero reading.

(3) Zero and span the analyzers with zero and span gases. The span gases must have concentrations between 75 and 100 percent of full-scale chart deflection. The flow rates and system

pressures during spanning shall be approximately the same as those encountered during sampling. A sample bag may be used to identify the required analyzer range.

(4) Recheck zero response. If this zero response differs from the zero response recorded in paragraph (c)(3) of this section by more than 1 percent of full scale, then paragraphs (c)(2), (c)(3), and (c)(4) of this section must be repeated.

(5) If a chart recorder is used, identify and record the most recent zero and span response as the pre-analysis values.

(6) If ADC equipment is used, electronically record the most recent zero and span response as the pre-analysis values.

(7) Measure HC, CO, CO_2, and NO_X background concentrations in the sample bag(s) with approximately the same flow rates and pressures used in paragraph (c)(3) of this section. (Constituents measured continuously do not require bag analysis.)

(8) A post-analysis zero and span check of each range must be performed and the values recorded. The number of events that may occur between the pre- and post-analysis checks is not specified. However, the difference between pre-analysis zero and span values (recorded in paragraph (c)(5) or (c)(6) of this section) versus those recorded for the post-analysis check may not exceed the zero drift limit or the span drift limit of 2 percent of full-scale chart deflection for any range used. Otherwise the test is void.

(d) *Continuous sample analysis.* For continuous sample analysis perform the following sequence:

(1) Warm up and stabilize the analyzers; clean and/or replace filter elements, conditioning columns (if used), and so forth, as necessary.

(2) Leak check portions of the sampling system that operate at negative gauge pressures when sampling, and allow heated sample lines, filters, pumps, and so forth to stabilize at operating temperature.

(3) Optional: Perform a hangup check for the HFID sampling system:

(i) Zero the analyzer using zero air introduced at the analyzer port.

(ii) Flow zero air through the overflow sampling system. Check the analyzer response.

(iii) If the overflow zero response exceeds the analyzer zero response by 2 percent or more of the HFID full-scale deflection, hangup is indicated and corrective action must be taken.

(iv) The complete system hangup check specified in paragraph (e) of this section is recommended as a periodic check.

(4) Obtain a stable zero reading.

(5) Zero and span each range to be used on each analyzer operated prior to the beginning of the test cycle. The span gases shall have a concentration between 75 and 100 percent of full-scale chart deflection. The flow rates and system pressures shall be approximately the same as those encountered during sampling. The HFID analyzer shall be zeroed and spanned either through the overflow sampling system or through the analyzer port.

(6) Re-check zero response. If this zero response differs from the zero response recorded in paragraph (d)(5) of this section by more than 1 percent of full scale, then paragraphs (d)(4), (d)(5), and (d)(6) of this section must be repeated.

(7) If a chart recorder is used, identify and record the most recent zero and span response as the pre-analysis values.

(8) If ADC equipment is used, electronically record the most recent zero and span response as the pre-analysis values.

(9) Collect background HC, CO, CO_2, and NO_X in a sample bag (for dilute exhaust sampling only, see § 89.420).

(10) Perform a post-analysis zero and span check for each range used at the conditions specified in paragraph (d)(5) of this section. Record these responses as the post-analysis values.

(11) Neither the zero drift nor the span drift between the pre-analysis and post-analysis checks on any range used may exceed 3 percent for HC, or 2 percent for NO_X. CO, and CO_2, of full scale chart deflection, or the test is void. (If the HC drift is greater than 3 percent of full-scale chart deflection, hydrocarbon hangup is likely.)

(12) Determine background levels of NO_X. CO, or CO_2 (for dilute exhaust

sampling only) by the bag sample technique outlined in paragraph (c) of this section.

(e) *Hydrocarbon hangup*. If HC hangup is indicated, the following sequence may be performed:

(1) Fill a clean sample bag with background air.

(2) Zero and span the HFID at the analyzer ports.

(3) Analyze the background air sample bag through the analyzer ports.

(4) Analyze the background air through the entire sample probe system.

(5) If the difference between the readings obtained greater than or equal to 2 percent of full scale deflection, clean the sample probe and the sample line.

(6) Reassemble the sample system, heat to specified temperature, and repeat the procedure in paragraphs (e)(1) through (e)(6) of this section.

[59 FR 31335, June 17, 1994. Redesignated and amended at 63 FR 56996, 57016, Oct. 23, 1998]

§ 89.412 Raw gaseous exhaust sampling and analytical system description.

(a) *Schematic drawing*. An example of a sampling and analytical system which may be used for testing under this subpart is shown in Figure 1 in appendix B to subpart D. All components or parts of components that are wetted by the sample or corrosive calibration gases shall be either chemically cleaned stainless steel or inert material, for example, polytetrafluoroethylene resin. The use of ''gauge savers'' or ''protectors'' with nonreactive diaphragms to reduce dead volumes is permitted.

(b) *Sample probe*. (1) The sample probe shall be a straight, closed-end, stainless steel, multi-hole probe. The inside diameter shall not be greater than the inside diameter of the sample line plus 0.03 cm. The wall thickness of the probe shall not be greater than 0.10 cm. The fitting that attaches the probe to the exhaust pipe shall be as small as practical in order to minimize heat loss from the probe.

(2) The probe shall have a minimum of three holes. The spacing of the radial planes for each hole in the probe must be such that they cover approximately equal cross-sectional areas of the exhaust duct. See Figure 1 in appendix A to this subpart. The angular spacing of the holes must be approximately equal. The angular spacing of any two holes in one plane may not be 180° ±20° (that is, section view C-C of Figure 1 in appendix A to this subpart). The holes should be sized such that each has approximately the same flow. If only three holes are used, they may not all be in the same radial plane.

(3) The probe shall extend radially across the exhaust duct. The probe must pass through the approximate center and must extend across at least 80 percent of the diameter of the duct.

(c) *Sample transfer line*. (1) The maximum inside diameter of the sample line shall not exceed 1.32 cm.

(2) If valve *V2* is used, the sample probe must connect directly to valve *V2*. The location of optional valve *V2* may not be greater than 1.22 m from the exhaust duct.

(3) The location of optional valve V16 may not be greater than 61 cm from the sample pump.

(d) *Venting*. All vents, including analyzer vents, bypass flow, and pressure relief vents of regulators, should be vented in such a manner to avoid endangering personnel in the immediate area.

(e) Any variation from the specifications in this subpart including performance specifications and emission detection methods may be used only with prior approval by the Administrator.

(f) Additional components, such as instruments, valves, solenoids, pumps, switches, and so forth, may be employed to provide additional information and coordinate the functions of the component systems.

(g) The following requirements must be incorporated in each system used for raw testing under this subpart.

(1) [Reserved]

(2) The sample transport system from the engine exhaust pipe to the HC analyzer and the NO_X analyzer must be heated as indicated in Figure 1 in appendix B of subpart D.

[59 FR 31335, June 17, 1994. Redesignated and amended at 63 FR 56996, 57016, Oct. 23, 1998]

§ 89.413 Raw sampling procedures.

Follow these procedures when sampling for gaseous emissions.

(a) The gaseous emission sampling probe must be installed at least 0.5 m or 3 times the diameter of the exhaust pipe—whichever is the larger—upstream of the exit of the exhaust gas system.

(b) In the case of a multi-cylinder engine with a branched exhaust manifold, the inlet of the probe shall be located sufficiently far downstream so as to ensure that the sample is representative of the average exhaust emissions from all cylinders.

(c) In multi-cylinder engines having distinct groups of manifolds, such as in a ''Vee'' engine configuration, it is permissible to:

(1) Sample after all exhaust pipes have been connected together into a single exhaust pipe.

(2) For each mode, sample from each exhaust pipe and average the gaseous concentrations to determine a value for each mode.

(3) Sample from all exhaust pipes simultaneously with the sample lines connected to a common manifold prior to the analyzer. It must be demonstrated that the flow rate through each individual sample line is ±4 percent of the average flow rate through all the sample lines.

(4) Use another method, if it has been approved in advance by the Administrator.

(d) All gaseous heated sampling lines shall be fitted with a heated filter to extract solid particles from the flow of gas required for analysis. The sample line for CO and CO_2 analysis may be heated or unheated.

[59 FR 31335, June 17, 1994. Redesignated and amended at 63 FR 56996, 57016, Oct. 23, 1998]

§ 89.414 Air flow measurement specifications.

(a) The air flow measurement method used must have a range large enough to accurately measure the air flow over the engine operating range during the test. Overall measurement accuracy must be ±2 percent of the maximum engine value for all modes. The Administrator must be advised of the method used prior to testing.

(b) When an engine system incorporates devices that affect the air flow measurement (such as air bleeds) that result in understated exhaust emission results, corrections to the exhaust emission results shall be made to account for such effects.

[59 FR 31335, June 17, 1994. Redesignated and amended at 63 FR 56996, 57017, Oct. 23, 1998]

§ 89.415 Fuel flow measurement specifications.

The fuel flow rate measurement instrument must have a minimum accuracy of 2 percent of the engine maximum fuel flow rate. The controlling parameters are the elapsed time measurement of the event and the weight or volume measurement.

[63 FR 57017, Oct. 23, 1998]

§ 89.416 Raw exhaust gas flow.

The exhaust gas flow shall be determined by one of the methods described in this section and conform to the tolerances of table 3 in appendix A to subpart D:

(a) Measurement of the air flow and the fuel flow by suitable metering systems (for details see SAE J244. This procedure has been incorporated by reference. See § 89.6.) and calculation of the exhaust gas flow as follows:

$G_{EXHW} = G_{AIRW} + G_{FUEL}$ (for wet exhaust mass)

or

$V_{EXHD} = V_{AIRD} + (-.767) \times G_{FUEL}$ (for dry exhaust volume)

or

$V_{EXHW} = V_{AIRW} + .749 \times G_{FUEL}$ (for wet exhaust volume)

(b) Exhaust mass calculation from fuel consumption (see § 89.415) and exhaust gas concentrations using the method found in § 89.418.

[59 FR 31335, June 17, 1994. Redesignated at 63 FR 56996, Oct. 23, 1998]

§ 89.417 Data evaluation for gaseous emissions.

For the evaluation of the gaseous emission recording, the last 60 seconds of each mode are recorded, and the average values for HC, CO, CO_2, and NO_X during each mode are determined from

the average concentration readings determined from the corresponding calibration data.

[59 FR 31335, June 17, 1994. Redesignated at 63 FR 56996, Oct. 23, 1998]

§ 89.418 Raw emission sampling calculations.

(a) The final test results shall be derived through the steps described in this section.

(b) The exhaust gas flow rate G_{EXHW} and V_{EXHW} shall be determined for each mode.

(1) For measurements using the mass flow method, see § 89.416(a).

(2) For measurements using the fuel consumption and exhaust gas concentrations method, use the following equations:

$$G_{EXHW} = G_{fuel} + G_{aird}\left(1 + \left(\frac{H}{1000}\right)\right)$$

Where:

$$G_{aird} = \frac{G_{fuel}}{(fla)} = \frac{\text{Mass Fuel Measured}}{G_{airw} \times \left(1 - \frac{H}{1000}\right)}$$

$$(fla) = \frac{4.77\,(1+\alpha/4)\,(fla)_{stoich}}{\frac{1}{X} - \left(\frac{DCO}{2X(10)^6}\right) - \left(\frac{DHC}{X(10)^6}\right) + \frac{\alpha}{4}\left(1 - \frac{DHC}{X(10)^6}\right) - \frac{0.75\,\alpha}{\left(\frac{K}{\left(\frac{DCO}{X(10)^6}\right)}\right) + \left(\frac{(1-K)}{\left(1 - \frac{DHC}{X(10)^6}\right)}\right)}}$$

$$(fla)_{Stoich} = \frac{M_c + \alpha M_H}{138.18\,(1+\alpha/4)}$$

$$X = \frac{DCO_2}{10^2} + \frac{DCO}{10^6} + \frac{DHC}{10^6}$$

K = 3.5

(3) Humidity values may be calculated from either one of the following equations:

$$H = \frac{6.22 \times R_a \times p_d}{p_R - \left(p_d \times R_a \times 10^{-2}\right)}$$

or

$$H = \frac{622 \times P_v}{(P_B - P_v)}$$

(c) When applying G_{EXHW}, the measured ''dry'' concentration shall be corrected to a wet basis, if not already measured on a wet basis. This section is applicable only for measurements made on raw exhaust gas. Correction to a wet basis shall be according to the following formula:

$$Conc_{WET} = K_w \times Conc_{DRY}$$

Where:

K_W is determined according to the equations in paragraph (c)(1) or (c)(2) of this section.

(1) For measurements using the mass flow method (see § 89.416(a)):

$$K_W = \left[1 - F_{FH} \times \frac{G_{fuel}}{G_{aird}}\right] - K_{W1}$$

$$F_{FH} = ALF \times 0.1448 \times \frac{1}{1 + \left(\frac{G_{fuel}}{G_{aird}}\right)} \text{ for diesel fuel only}$$

$$ALF = \text{Hydrogen mass percentage of fuel} = \frac{1.008 \times \alpha}{12.01 + 1.008 \times \alpha} \times 100 = 13.12 \text{ for } CH_{1.8}\text{fuel}$$

α = H/C mole ratio of the fuel.

(2) For measurements using the fuel consumption and exhaust gas concentrations method (see § 89.416(b)):

$$K_W = \frac{1}{1 + 1.8 \times 0.005 \times \left[\frac{DCO}{10^4} = DCO_2\right]} - K_{W1}$$

Where:

$$K_{W1} = \frac{1.608 \times H}{1000 + 1.608 \times H}$$

(d) As the NO_X emission depends on intake air conditions, the NO_X concentration shall be corrected for intake air temperature and humidity with the factor K_h given in the following formula. For engines operating on alternative combustion cycles, other correction formulas may be used if they can be justified or validated. The formula follows:

$$K_H = \frac{1}{1 - 0.0182(H - 10.71)}$$

(e) The pollutant mass flow for each mode shall be calculated as follows:

Gas mass = $u \times$ Gas conc. $\times G_{EXHW}$
Gas mass = $v \times$ Gas conc. $\times V_{EXHD}$
Gas mass = $w \times$ Gas conc. $\times V_{EXHW}$

The coefficients u (wet), v (dry), and w (wet) are to be used according to the following table:

Gas	u	v	w	conc.
NO_X	0.001587	0.00205	0.00205	ppm.
CO	0.000966	0.00125	0.00125	ppm.
HC	0.000478		0.000618	ppm.
CO_2	15.19	19.64	19.64	percent.

NOTE: The given coefficients u, v, and w are calculated for 273.15 °K (0 °C) and 101.3 kPa. In cases where the reference conditions vary from those stated, an error may occur in the calculations.

(f) The following equations may be used to calculate the coefficients u, v, and w in paragraph (e) of this section for other conditions of temperature and pressure:

(1) For the calculation of u, v, and w for NO_X (as NO_2), CO, HC (in paragraph (e) of this section as $CH_{1.80}$), CO_2, and O_2:

Where:

w = $4.4615.10^{-5} \times$ M if conc. in ppm
w = $4.4615.10^{-1} \times$ M if conc. in percent
v = w
u = w/ρ_{Air}
M = Molecular weight
ρ_{Air} = Density of dry air at 273.15 °K (0 °C), 101.3 kPa = 1.293 kg/m³

(2) For real gases at 273.15 °K (0 °C) and 101.3 kPa: For the calculation of u, v, and w

w = gas $\times 10^{-6}$ if conc. in ppm
$v = w$
u = w/p_{Air}
p_{Gas} = Density of measured gas at 0 °C, 101.3 kPas in g/m³

(3) General formulas for the calculation of concentrations at temperature (designated as T) and pressure (designated as p):

—for ideal gases

$$\text{conc}\frac{g}{m_3} = \frac{M}{M_v} \times \frac{T_o}{T_o + T} \times \frac{P}{P_o} \quad \frac{\text{Conc(ppm)}}{10^6}$$

—for real gases

$$\text{conc}\frac{g}{m_3} = \rho_{Gas} \times \frac{T_o}{T_o + T} \times \frac{P}{P_o} \quad \frac{\text{Conc(ppm)}}{10^6}$$

with:

1% = 10^4 ppm
M = Molecular weight in g/Mo1
M_v = Molecular Volume = 22.414×10^{-3} m³/Mol for ideal gases
T = reference temperature 273.15 K
p = reference pressure 101.3 kPa
T = Temperature in °C
p = pressure in kPa
p_{Gas} = Density of the measured gas at 0 °C, 101.3 kPa
Conc. = Gas concentration

(g)(1) The emission shall be calculated for all individual components

in the following way where power at idle is equal to zero:

$$\text{individualgas} = \frac{\sum_{i=1}^{i=n}\left(g_i \times WF_i\right)}{\sum_{i=1}^{i=n}\left(P_i \times WF_i\right)}$$

(2) The weighting factors and the number of modes (n) used in the calculation in paragraph (g)(1) of this section are according to § 89.410.

[59 FR 31335, June 17, 1994. Redesignated and amended at 63 FR 56996, 57017, Oct. 23, 1998]

§ 89.419 Dilute gaseous exhaust sampling and analytical system description.

(a) *General*. The exhaust gas sampling system described in this section is designed to measure the true mass of gaseous emissions in the exhaust of petroleum-fueled nonroad compression-ignition engines. This system utilizes the CVS concept (described in 40 CFR part 1065, subparts A and B) of measuring mass emissions of HC, CO, and CO_2. A continuously integrated system is required for HC and NO_X measurement and is allowed for all CO and CO_2 measurements. The mass of gaseous emissions is determined from the sample concentration and total flow over the test period. As an option, the measurement of total fuel mass consumed over a cycle may be substituted for the exhaust measurement of CO_2. General requirements are as follows:

(1) This sampling system requires the use of a PDP-CVS and a heat exchanger or a CFV-CVS with either a heat exchanger or electronic flow compensation. Figure 2 in appendix A to this subpart is a schematic drawing of the PDP-CVS system. Figure 3 in appendix A to this subpart is a schematic drawing of the CFV-CVS system.

(2) The HC analytical system for petroleum-fueled compression-ignition engines requires a heated flame ionization detector (HFID) and heated sample system (191 ±11 °C).

(i) The HFID sample must be taken directly from the diluted exhaust stream through a heated probe and integrated continuously over the test cycle. Unless compensation for varying flow is made, the HFID must be used with a constant flow system to ensure a representative sample.

(ii) The heated probe shall be located in the primary dilution tunnel and far enough downstream of the mixing chamber to ensure a uniform sample distribution across the CVS duct at the point of sampling.

(3) The CO and CO_2 analytical system requires:

(i) Bag sampling (see 40 CFR part 1065) and analytical capabilities (see 40 CFR part 1065), as shown in Figure 2 and Figure 3 in appendix A to this subpart; or

(ii) Continuously integrated measurement of diluted CO and CO_2 meeting the minimum requirements and technical specifications contained in paragraph (b)(4) of this section. Unless compensation for varying flow is made, a constant flow system must be used to ensure a representative sample.

(4) The NO_X analytical system requires a continuously integrated measurement of diluted NO_X meeting the minimum requirements and technical specifications contained in paragraph (b)(4) of this section. Unless compensation for varying flow is made, a constant flow system must be used to ensure a representative sample.

(5) Since various configurations can produce equivalent results, exact conformance with these drawings is not required. Additional components such as instruments, valves, solenoids, pumps, and switches may be used to provide additional information and coordinate the functions of the component systems. Other components, such as snubbers, which are not needed to maintain

accuracy on some systems, may be excluded if their exclusion is based upon good engineering judgment.

(6) Other sampling and/or analytical systems may be used if shown to yield equivalent results and if approved in advance by the Administrator.

(b) *Component description*. The components necessary for exhaust sampling shall meet the following requirements:

(1) *Exhaust dilution system*. The PDP–CVS shall conform to all of the requirements listed for the exhaust gas PDP–CVS in 40 CFR part 1065. The CFV–CVS shall conform to all the requirements listed for the exhaust gas CFV–CVS in 40 CFR part 1065. In addition, the CVS must conform to the following requirements:

(i) The flow capacity of the CVS must be sufficient to maintain the diluted exhaust stream at or below the temperature required for the measurement of hydrocarbon emissions noted in the following paragraph and to prevent condensation of water at any point in the dilution tunnel.

(ii) The flow capacity of the CVS must be sufficient to maintain the diluted exhaust stream in the primary dilution tunnel at a temperature of 191 °C or less at the sampling zone for hydrocarbon measurement and as required to prevent condensation at any point in the dilution tunnel. Gaseous emission samples may be taken directly from this sampling point.

(iii) For the CFV-CVS, either a heat exchanger or electronic flow compensation is required (see Figure 3 in appendix A to this subpart).

(iv) For the CFV-CVS when a heat exchanger is used, the gas mixture temperature, measured at a point immediately ahead of the critical flow venturi, shall be within ±11 °C) of the average operating temperature observed during the test with the simultaneous requirement that condensation does not occur. The temperature measuring system (sensors and readout) shall have an accuracy and precision of ±2 °C. For systems utilizing a flow compensator to maintain proportional flow, the requirement for maintaining constant temperature is not necessary.

(v) The primary dilution air shall have a temperature of 25 °C ±5 °C.

(2) *Continuous HC measurement system*. (i) The continuous HC sample system (as shown in Figure 2 or 3 in appendix A to this subpart) uses an ''overflow'' zero and span system. In this type of system, excess zero or span gas spills out of the probe when zero and span checks of the analyzer are made. The ''overflow'' system may also be used to calibrate the HC analyzer according to 40 CFR part 1065, subpart F, although this is not required.

(ii) No other analyzers may draw a sample from the continuous HC sample probe, line or system, unless a common sample pump is used for all analyzers and the sample line system design reflects good engineering practice.

(iii) The overflow gas flow rates into the sample line shall be at least 105 percent of the sample system flow rate.

(iv) The overflow gases shall enter the heated sample line as close as practical to the outside surface of the CVS duct or dilution tunnel.

(v) The continuous HC sampling system shall consist of a probe (which must raise the sample to the specified temperature) and, where used, a sample transfer system (which must maintain the specified temperature). The continuous hydrocarbon sampling system (exclusive of the probe) shall:

(A) Maintain a wall temperature of 191 °C ±11 °C as measured at every separately controlled heated component (that is, filters, heated line sections), using permanent thermocouples located at each of the separate components.

(B) Have a wall temperature of 191 °C ±11 °C over its entire length. The temperature of the system shall be demonstrated by profiling the thermal characteristics of the system where possible at initial installation and after any major maintenance performed on the system. The profiling shall be accomplished using the insertion thermocouple probing technique. The system temperature will be monitored continuously during testing at the locations and temperature described in 40 CFR 1065.145.

(C) Maintain a gas temperature of 191 °C ±11 °C immediately before the heated filter and HFID. These gas temperatures will be determined by a temperature sensor located immediately upstream of each component.

(vi) The continuous hydrocarbon sampling probe shall:

(A) Be defined as the first 25 cm to 76 cm of the continuous hydrocarbon sampling system.

(B) Have a 0.48 cm minimum inside diameter.

(C) Be installed in the primary dilution tunnel at a point where the dilution air and exhaust are well mixed (that is, approximately 10 tunnel diameters downstream of the point where the exhaust enters the dilution tunnel).

(D) Be sufficiently distant (radially) from other probes and the tunnel wall so as to be free from the influence of any wakes or eddies.

(E) Increase the gas stream temperature to 191 °C ±11 °C at the exit of the probe. The ability of the probe to accomplish this shall be demonstrated using the insertion thermocouple technique at initial installation and after any major maintenance. Compliance with the temperature specification shall be demonstrated by continuously recording during each test the temperature of either the gas stream or the wall of the sample probe at its terminus.

(vii) The response time of the continuous measurement system shall be no greater than:

(A) 1.5 seconds from an instantaneous step change at the port entrance to the analyzer to within 90 percent of the step change.

(B) 20 seconds from an instantaneous step change at the entrance to the sample probe or overflow span gas port to within 90 percent of the step change. Analysis system response time shall be coordinated with CVS flow fluctuations and sampling time/test cycle offsets if necessary.

(C) For the purpose of verification of response times, the step change shall be at least 60 percent of full-scale chart deflection.

(3) *Primary dilution tunnel.* (i) The primary dilution tunnel shall be:

(A) Small enough in diameter to cause turbulent flow (Reynolds Number greater than 4000) and of sufficient length to cause complete mixing of the exhaust and dilution air;

(B) At least 46 cm in diameter; (engines below 110 kW may use a dilution tunnel that is 20 cm in diameter or larger)

(C) Constructed of electrically conductive material which does not react with the exhaust components; and

(D) Electrically grounded.

(ii) The temperature of the diluted exhaust stream inside of the primary dilution tunnel shall be sufficient to prevent water condensation.

(iii) The engine exhaust shall be directed downstream at the point where it is introduced into the primary dilution tunnel.

(4) *Continuously integrated NO_X.* CO, and CO_2 *measurement systems.* (i) The sample probe shall:

(A) Be in the same plane as the continuous HC probe, but shall be sufficiently distant (radially) from other probes and the tunnel wall so as to be free from the influences of any wakes or eddies.

(B) Heated and insulated over the entire length, to prevent water condensation, to a minimum temperature of 55 °C. Sample gas temperature immediately before the first filter in the system shall be at least 55 °C.

(ii) The continuous NO_X, CO, or CO_2 sampling and analysis system shall conform to the specifications of 40 CFR 1065.145 with the following exceptions and revisions:

(A) The system components required to be heated by 40 CFR 1065.145 need only be heated to prevent water condensation, the minimum component temperature shall be 55 °C.

(B) The system response shall meet the specifications in 40 CFR part 1065, subpart C.

(C) Alternative NO_X measurement techniques outlined in 40 CFR part 1065, subpart D, are not permitted for NO_X measurement in this subpart.

(D) All analytical gases must conform to the specifications of § 89.312.

(E) Any range on a linear analyzer below 155 ppm must have and use a calibration curve conforming to § 89.310.

(iii) The chart deflections or voltage output of analyzers with non-linear

calibration curves shall be converted to concentration values by the calibration curve(s) specified in § 89.313 before flow correction (if used) and subsequent integration takes place.

[59 FR 31335, June 17, 1994. Redesignated at 63 FR 56996, Oct. 23, 1998, as amended at 70 FR 40445, July 13, 2005]

§ 89.420 Background sample.

(a) Background samples are produced by continuously drawing a sample of dilution air during the exhaust collection phase of each test cycle mode.

(1) Individual background samples may be produced and analyzed for each mode. Hence, a unique background value will be used for the emission calculations for each mode.

(2) Alternatively, a single background sample may be produced by drawing a sample during the collection phase of each of the test cycle modes. Hence, a single cumulative background value will be used for the emission calculations for each mode.

(b) For analysis of the individual sample described in paragraph (a)(1) of this section, a single value representing the average chart deflection over a 10-second stabilized period is stored. All readings taken during the 10-second interval must be stable at the final value to within ±1 percent of full scale.

(c) Measure HC, CO, CO_2, and NO_X exhaust and background concentrations in the sample bag(s) with approximately the same flow rates and pressures used during calibration.

[59 FR 31335, June 17, 1994. Redesignated and amended at 63 FR 56996, 57018, Oct. 23, 1998]

§ 89.421 Exhaust gas analytical system; CVS bag sample.

(a) *Schematic drawings*. Figure 4 in appendix A to this subpart is a schematic drawing of the exhaust gas analytical system used for analyzing CVS bag samples from compression- ignition engines. Since various configurations can produce accurate results, exact conformance with the drawing is not required. Additional components such as instruments, valves, solenoids, pumps and switches may be used to provide additional information and coordinate the functions of the component systems. Other components such as snubbers, which are not needed to maintain accuracy in some systems, may be excluded if their exclusion is based upon good engineering judgment.

(b) *Major component description*. The analytical system, Figure 4 in appendix A to this subpart, consists of a flame ionization detector (FID) (heated for petroleum-fueled compression-ignition engines to 191 °C ±6 °C) for the measurement of hydrocarbons, nondispersive infrared analyzers (NDIR) for the measurement of carbon monoxide and carbon dioxide, and a chemiluminescence detector (CLD) (or HCLD) for the measurement of oxides of nitrogen. The exhaust gas analytical system shall conform to the following requirements:

(1) The CLD (or HCLD) requires that the nitrogen dioxide present in the sample be converted to nitric oxide before analysis. Other types of analyzers may be used if shown to yield equivalent results and if approved in advance by the Administrator.

(2) If CO instruments are used which are essentially free of CO_2 and water vapor interference, the use of the conditioning column may be deleted. (See 40 CFR part 1065, subpart D.)

(3) A CO instrument will be considered to be essentially free of CO_2 and water vapor interference if its response to a mixture of 3 percent CO_2 in N2, which has been bubbled through water at room temperature, produces an equivalent CO response, as measured on the most sensitive CO range, which is less than 1 percent of full scale CO concentration on ranges above 300 ppm full scale or less than 3 ppm on ranges below 300 ppm full scale. (See 40 CFR part 1065, subpart D.)

(c) *Alternate analytical systems*. Alternate analysis systems meeting the specifications of 40 CFR part 1065, subpart A, may be used for the testing required under this subpart. Heated analyzers may be used in their heated configuration.

(d) Other analyzers and equipment. Other types of analyzers and equipment may be used if shown to yield equivalent results and if approved in advance by the Administrator.

[59 FR 31335, June 17, 1994. Redesignated at 63 FR 56996, Oct. 23, 1998, as amended at 70 FR 40446, July 13, 2005]

§ 89.422 Dilute sampling procedures—CVS calibration.

(a) The CVS is calibrated using an accurate flowmeter and restrictor valve.

(1) The flowmeter calibration must be traceable to NIST measurements, and will serve as the reference value (NIST ''true'' value) for the CVS calibration. (Note: In no case should an upstream screen or other restriction which can affect the flow be used ahead of the flowmeter unless calibrated throughout the flow range with such a device.)

(2) The CVS calibration procedures are designed for use of a ''metering venturi'' type flowmeter. Large radius or ASME flow nozzles are considered equivalent if traceable to NIST measurements. Other measurement systems may be used if shown to be equivalent under the test conditions in this section and traceable to NIST measurements.

(3) Measurements of the various flowmeter parameters are recorded and related to flow through the CVS.

(4) Procedures used by EPA for both PDP-CVS and CFV-CVS are outlined below. Other procedures yielding equivalent results may be used if approved in advance by the Administrator.

(b) After the calibration curve has been obtained, verification of the entire system may be performed by injecting a known mass of gas into the system and comparing the mass indicated by the system to the true mass injected. An indicated error does not necessarily mean that the calibration is wrong, since other factors can influence the accuracy of the system (for example, analyzer calibration, leaks, or HC hangup). A verification procedure is found in paragraph (e) of this section.

(c) *PDP-CVS calibration*. (1) The following calibration procedure outlines the equipment, the test configuration, and the various parameters which must be measured to establish the flow rate of the PDP-CVS pump.

(i) All the parameters related to the pump are simultaneously measured with the parameters related to a flowmeter which is connected in series with the pump.

(ii) The calculated flow rate, in (cm^3/s), (at pump inlet absolute pressure and temperature) can then be plotted versus a correlation function which is the value of a specific combination of pump parameters.

(iii) The linear equation which relates the pump flow and the correlation function is then determined.

(iv) In the event that a CVS has a multiple speed drive, a calibration for each range used must be performed.

(2) This calibration procedure is based on the measurement of the absolute values of the pump and flowmeter parameters that relate the flow rate at each point. Two conditions must be maintained to assure the accuracy and integrity of the calibration curve:

(i) The temperature stability must be maintained during calibration. (Flowmeters are sensitive to inlet temperature oscillations; this can cause the data points to be scattered. Gradual changes in temperature are acceptable as long as they occur over a period of several minutes.)

(ii) All connections and ducting between the flowmeter and the CVS pump must be absolutely void of leakage.

(3) During an exhaust emission test the measurement of these same pump parameters enables the user to calculate the flow rate from the calibration equation.

(4) Connect a system as shown in Figure 5 in appendix A to this subpart. Although particular types of equipment are shown, other configurations that yield equivalent results may be used if approved in advance by the Administrator. For the system indicated, the following measurements and accuracies are required:

CALIBRATION DATA MEASUREMENTS

Parameter	Symbol	Units	Sensor-readout tolerances
Barometric pressure (corrected)	P_B	kPa	±.34 kPa
Ambient temperature	T_A	°C	±.3 °C
Air temperature into metering venturi	*ETI*	°C	±1.1 °C

CALIBRATION DATA MEASUREMENTS—Continued

Parameter	Symbol	Units	Sensor-readout tolerances
Pressure drop between the inlet and throat of metering venturi.	*EDP*	kPa	±.01 kPa
Air flow	Q_S	m³/min	±.5% of NIST value.
Air temperature at CVS pump inlet	*PTI*	°C	±1.1 °C
Pressure depression at CVS pump inlet	*PPI*	kPa	±.055 kPa
Pressure head at CVS pump outlet	*PPO*	kPa	±.055 kPa
Air temperature at CVS pump outlet (optional)	*PTO*	°C	±1.1 °C
Pump revolutions during test period	*N*	Revs	±1 Rev.
Elapsed time for test period	*t*	s	±.5 s.

(5) After the system has been connected as shown in Figure 5 in appendix A to this subpart, set the variable restrictor in the wide open position and run the CVS pump for 20 minutes. Record the calibration data.

(6) Reset the restrictor valve to a more restricted condition in an increment of pump inlet depression that will yield a minimum of six data points for the total calibration. Allow the system to stabilize for 3 minutes and repeat the data acquisition.

(7) Data analysis:

(i) The air flow rate, Q_s, at each test point is calculated in standard cubic meters per minute (0 °C, 101.3 kPa) from the flowmeter data using the manufacturer's prescribed method.

(ii) The air flow rate is then converted to pump flow, V_o, in cubic meter per revolution at absolute pump inlet temperature and pressure:

$$V_o = \frac{Q_s}{n} \times \frac{T_p}{273} \times \frac{101.3}{P_p}$$

Where:

V_o = Pump flow, (m³/rev) at T_p, P_p.

Q_s = Meter air flow rate in standard cubic meters per minute, standard conditions are 0 °C, 101.3 kPa.

n=Pump speed in revolutions per minute.

T_p=Pump inlet temperature °K=P_{ti}+273 °K, P_{ti}=Pump inlet temp °C

P_p=Absolute pump inlet pressure, (kPa) = $P_B - P_{PI}$

Where:

P_B=barometric pressure, (kPa).

P_{PI}=Pump inlet depression, (kPa).

(iii) The correlation function at each test point is then calculated from the calibration data:

$$X_o = \frac{1}{n}\sqrt{\left(\frac{\Delta p}{P_e}\right)}$$

X_o = correlation function.

Δp = The pressure differential from pump inlet to pump outlet, (kPa). = $P_e - P_p$.

P_e = Absolute pump outlet pressure, (kPa) = $P_B + P_{PO}$

Where:

P_{PO}=Pressure head at pump outlet, (kPa).

(iv) A linear least squares fit is performed to generate the calibration equation which has the form:

$V_o = D_o - M(X_o)$

D_o and M are the intercept and slope constants, respectively, describing the regression line.

(8) A CVS system that has multiple speeds must be calibrated on each speed used. The calibration curves generated for the ranges will be approximately parallel and the intercept values, D_o, will increase as the pump flow range decreases.

(9) If the calibration has been performed carefully, the calculated values from the equation will be within ±0.50 percent of the measured value of V_o. Values of M will vary from one pump to another, but values of D_o for pumps of the same make, model, and range should agree within ±3 percent of each other. Calibrations should be performed at pump start-up and after major maintenance to assure the stability of the pump slip rate. Analysis of mass injection data will also reflect pump slip stability.

(d) *CFV-CVS calibration.* (1) Calibration of the CFV is based upon the flow equation for a critical venturi. Gas flow is a function of inlet pressure and temperature:

$$Q_s = \frac{K_v P}{\sqrt{T}}$$

Where:

Qs = flow.
Kv = calibration coefficient.
P = absolute pressure.
T = absolute temperature.

The calibration procedure described in paragraph (d)(3) of this section establishes the value of the calibration coefficient at measured values of pressure, temperature, and air flow.

(2) The manufacturer's recommended procedure shall be followed for calibrating electronic portions of the CFV.

(3) Measurements necessary for flow calibration are as follows:

CALIBRATION DATA MEASUREMENTS

Parameter	Symbol	Units	Tolerances
Barometric pressure (corrected)	P_B	kPa (Inches Hg)	0.034 (0.01).
Air temperature, flowmeter	ETI	deg.C (deg.F)	0.14 (0.25).
Pressure depression upstream of LFE	EPI	kPa(Inches H_2O)	0.012 (0.05).
Pressure drop across LFE matrix	EDP	kPa (Inches H_2O)	0.001 (0.005).
Air flow	Q_s	m^3/min. (Ft^3/min)	0.5 pct.
CFV inlet depression	PPI	kPa (Inches Hg)	0.055 (0.016).
CFV outlet pressure	PPO	kPa (Inches Hg)	0.17 (0.05).
Temperature at venturi inlet	T_v	deg.C (deg.F)	0.28 (0.5)
Specific gravity of manometer fluid	Sp.Gr		(1.75 oil).

(4) Set up equipment as shown in Figure 6 in appendix A to subpart and eliminate leaks. (Leaks between the flow measuring devices and the critical flow venturi will seriously affect the accuracy of the calibration.)

(5) Set the variable flow restrictor to the open position, start the blower, and allow the system to stabilize. Record data from all instruments.

(6) Vary the flow restrictor and make at least eight readings across the critical flow range of the venturi.

(7) *Data analysis*. The data recorded during the calibration are to be used in the following calculations:

(i) The air flow rate (designated as Q_s) at each test point is calculated in standard cubic feet per minute from the flow meter data using the manufacturer's prescribed method.

(ii) Calculate values of the calibration coefficient for each test point:

$$K_v = \frac{Q_s \sqrt{T_v}}{P_v}$$

Where:

Q_s = Flow rate in standard cubic meter per minute, at the standard conditions of 0 °C, 101.3 kPa.
T_v = Temperature at venturi inlet, °K.
P_v = PB - PPI (= Pressure at venturi inlet, kPA)

Where:

P_{PI} = Venturi inlet pressure depression, (kPa).

(iii) Plot K_v as a function of venturi inlet pressure. For choked flow, K_v will have a relatively constant value. As pressure decreases (vacuum increases), the venturi becomes unchoked and K_v decreases. (See Figure 7 in appendix A to this subpart.)

(iv) For a minimum of eight points in the critical region calculate an average K_v and the standard deviation.

(v) If the standard deviation exceeds 0.3 percent of the average K_v, take corrective action.

(e) *CVS system verification*. The following ''gravimetric'' technique can be used to verify that the CVS and analytical instruments can accurately measure a mass of gas that has been injected into the system. (Verification can also be accomplished by constant flow metering using critical flow orifice devices.)

(1) Obtain a small cylinder that has been charged with 99.5 percent or greater propane or carbon monoxide gas (Caution—carbon monoxide is poisonous).

(2) Determine a reference cylinder weight to the nearest 0.01 grams.

(3) Operate the CVS in the normal manner and release a quantity of pure propane into the system during the sampling period (approximately 5 minutes).

(4) The calculations are performed in the normal way except in the case of propane. The density of propane (0.6109 kg/m³/carbon atom)) is used in place of the density of exhaust hydrocarbons.

(5) The gravimetric mass is subtracted from the CVS measured mass and then divided by the gravimetric mass to determine the percent accuracy of the system.

(6) Good engineering practice requires that the cause for any discrepancy greater than ±2 percent must be found and corrected.

[59 FR 31335, June 17, 1994. Redesignated and amended at 63 FR 56996, 57018, Oct. 23, 1998]

§ 89.423 [Reserved]

§ 89.424 Dilute emission sampling calculations.

(a) The final reported emission test results are computed by use of the following formula:

$$A_{WM} = \frac{\sum_{i=1}^{i=n}\left(g_i \times WF_i\right)}{\sum_{i=1}^{i=n}\left(P_i \times WF_i\right)}$$

Where:

A_{wm} = Weighted mass emission level (HC, CO, CO_2, PM, or NO_X) in g/kW-hr.

g_i = Mass flow in grams per hour, = grams measured during the mode divided by the sample time for the mode.

WF_i = Effective weighing factor.

P_i = Power measured during each mode (Power set = zero for the idle mode).

(b) The mass of each pollutant for each mode for bag measurements and diesel heat exchanger system measurements is determined from the following equations:

(1) Hydrocarbon mass:

$HC_{mass} = V_{mix} \times Density_{HC} \times (HC_{conc}/10^6)$

(2) Oxides of nitrogen mass:

$NO_{Xmass} = V_{mix} \times Density_{NO2} \times KH \times (NO_{Xconc}/10^6)$

(3) Carbon monoxide mass:

$CO_{mass} = V_{mix} \times Density_{CO} \times (CO_{conc}/10^6)$

(4) Carbon dioxide mass:

$CO_{2mass} = V_{mix} \times Density_{CO2} \times (CO_{2conc}/10_2)$

(c) The mass of each pollutant for the mode for flow compensated sample systems is determined from the following equations:

$$HC_{mass} = V_{mix} \times Density_{HC} \frac{HC_e - HC_d\left(1 - \frac{1}{DF}\right)}{10^6}$$

$$NOX_{mass} = K_H \frac{NOX_e - NOX_d\left(1 - \frac{1}{DF}\right)}{10^6} V_{mix} \times Density_{NO_2}$$

$$CO_{mass} = V_{mix} \times Density_{CO} \frac{CO_c - CO_d\left(1 - \frac{1}{DF}\right)}{10^6}$$

$$CO_{2_{mass}} = V_{mix} \times Density_{CO_2} \frac{CO_{2_e} - CO_{2_d}\left(1 - \frac{1}{DF}\right)}{10^6}$$

(d) Meaning of symbols:

(1) For hydrocarbon equations:

HC_{mass}= Hydrocarbon emissions, in grams per test mode.

$Density_{HC}$= Density of hydrocarbons is (.5800 kg/m³) for #1 diesel, and (0.5746 kg/m³) for #2 diesel, assuming an average carbon to hydrogen ratio of 1:1.93 for #1 diesel, and 1:1.80 for #2 diesel at 20 °C and 101.3 kPa pressure.

HC_{conc}= Hydrocarbon concentration of the dilute exhaust sample corrected for background, in ppm carbon equivalent (that is, equivalent propane times 3).

$$HC_{conc} = HC_e - HC_d\left(1 - \frac{1}{DF}\right)$$

Where:

HC_e= Hydrocarbon concentration of the dilute exhaust bag sample or, for diesel heat exchanger systems, average hydrocarbon concentration of the dilute exhaust sample as calculated from the integrated HC traces, in ppm carbon equivalent. For flow compensated sample systems $(HC_e)_i$ is the instantaneous concentration.

HC_d= Hydrocarbon concentration of the dilution air as measured, in ppm carbon equivalent.

(2) For oxides of nitrogen equations:

NO_{Xmass} = Oxides of nitrogen emissions, in grams per test mode.

$Density\ NO_2$= Density of oxides of nitrogen is 1.913 kg/m³, assuming they are in the form of nitrogen dioxide, at 20 °C and 101.3 kPa pressure.

NO_{Xconc}= Oxides of nitrogen concentration of the dilute exhaust sample corrected for background, in ppm:

$$NOx_{conc} = NOx_e - NOx_d\left(1 - \frac{1}{DF}\right)$$

Where:

NO_X.= Oxides of nitrogen concentration of the dilute exhaust bag sample as measured, in ppm. For flow compensated sample systems $(NO_X.)_i$ is the instantaneous concentration.

NO_X.= Oxides of nitrogen concentration of the dilute air as measured, in ppm.

(3) For carbon monoxide equations:

CO_{mass}=Carbon monoxide emissions, grams per test mode. $Density_{CO}$=Density of carbon monoxide (1.164 kg/m³ at 20 °C and 101.3 kPa pressure).

CO_{conc}=Carbon monoxide concentration of the dilute exhaust sample corrected for background, water vapor, and CO_2 extraction, ppm.

$$CO_{conc} = CO_e - CO_d\left(1 - \frac{1}{DF}\right)$$

Where:

CO_e=Carbon monoxide concentration of the dilute exhaust bag sample volume corrected for water vapor and carbon dioxide extraction, ppm. For flow compensated

sample systems, $(CO_e)_i$ is the instantaneous concentration.

The following calculation assumes the carbon to hydrogen ratio of the fuel is 1:1.85. As an option the measured actual carbon to hydrogen ratio may be used:

$CO_e = [1 - 0.01925CO_2. - 0.000323R]CO_{em}$

Where:

CO_{em}=Carbon monoxide concentration of the dilute exhaust sample as measured, ppm.

CO_2.=Carbon dioxide concentration of the dilute exhaust bag sample, in percent, if measured. For flow compensated sample systems, $(CO_2.)_i$ is the instantaneous concentration. For cases where exhaust sampling of CO_2 is not performed, the following approximation is permitted:

$$CO_{2_e} = \frac{44.010}{12.011 + 1.008\alpha} \frac{M^1\ 453.6}{Density_{CO_2}} \frac{100}{V_{mix}}$$

[a]=Average carbon to hydrogen ratio.

M^1 = Fuel mass consumed during the mode.

R=Relative humidity of the dilution air, percent.

CO_d=Carbon monoxide concentration of the dilution air corrected for water vapor extraction, ppm.

$CO_d = (1 - 0.000323R)CO_{dm}$

Where:

CO_{dm}=Carbon monoxide concentration of the dilution air sample as measured, ppm.

(Note: If a CO instrument that meets the criteria specified in 40 CFR part 1065, subpart C, is used without a sample dryer according to 40 CFR 1065.145, CO_{em} must be substituted directly for CO_e and CO_{dm} must be substituted directly for CO_d.)

(4) For carbon dioxide equation:

CO_{2mass}=Carbon dioxide emissions, in grams per test mode.

Density CO_2=Density of carbon dioxide is 1.830 kg/m^3, at 20 °C and 760 mm Hg pressure.

CO_{2conc}=Carbon dioxide concentration of the dilute exhaust sample corrected for background, in percent.

$$CO_{2_{mass}} = CO_{2_e} - CO_{2_d}\left(1 - \frac{1}{DF}\right)$$

Where:

CO_2.=Carbon dioxide concentration of the dilution air as measured, in percent.

$$(5)\ DF = \frac{13.4}{CO_{2_e} + \left(HC_e + CO_e \times 10^{-4}\right)},\ \text{or}\ DF = \frac{13.4}{CO_{2_e}}.$$

(6) Measured ''dry'' concentrations shall be corrected to a wet basis, if not already measured on a wet basis. This section is applicable only for measurements made on dilute exhaust gas. Correction to a wet basis shall be according to the following formula:

$Conc_{WET} = K_W \times Conc_{DRY}$

Where: K_W is determined according to the equation in paragraph (d)(6)(i) or (d)(6)(ii), of this section.

(i) For wet CO_2 measurement:

$$K_w = \left(1 - \frac{\alpha \times CO_2\%\,conc(wet)}{200}\right) - K_{w1}$$

(ii) For dry CO_2 measurement:

$$K_w = \left(\frac{(1 - K_{W1})}{1 + \frac{\alpha \times CO_2\%\,\mathrm{conc(dry)}}{200}} \right)$$

(iii) For the equations in paragraph (d)(6)(i) and (d)(6)(ii) of this section, the following equation applies:

$$K_{w1} = \frac{1.608 \times \left[H_d \times \left(1 - {}^{1}\!/_{DF}\right) + H_a \times \left({}^{1}\!/_{DF}\right) \right]}{1000 + \left\{ 1.608 \times \left[H_d \times \left(1 - {}^{1}\!/_{DF}\right) + H_a \times \left({}^{1}\!/_{DF}\right) \right] \right\}} +$$

Where: H_a and H_d are the grams of water per kilogram of dry air; as illustrated in the following equations:

$$H_d = \frac{6.22 \times R_d \times p_d}{p_B - \left(p_d \times R_d \times 10^{-2}\right)}$$

$$H_a = \frac{6.22 \times R_a \times p_a}{p_B - \left(p_a \times R_a \times 10^{-2}\right)}$$

(e) The final modal reported brake-specific fuel consumption (bsfc) shall be computed by use of the following formula:

$$\mathrm{bsfc} = \frac{M}{kW - hr}$$

Where:

bsfc = brake-specific fuel consumption for a mode in grams of fuel per kilowatt-hour (kW-hr).

M = mass of fuel in grams, used by the engine during a mode.

kW-hr = total kilowatts integrated with respect to time for a mode.

(f) The mass of fuel for the mode is determined from mass fuel flow measurements made during the mode, or from the following equation:

$$M = \left(\frac{G_S}{R_2} \right) \left(\frac{1}{273.15} \right)$$

Where:

M=Mass of fuel, in grams, used by the engine during the mode.

G_s=Grams of carbon measured during the mode:

$$G_S = \left[\frac{12.011}{12.011 + \alpha\,(1.008)}\right] HC_{mass} + 0.429 CO_{mass} + 0.273 CO_{2_{mass}}$$

R_2=Grams C in fuel per gram of fuel

Where:

HC_{mass}=hydrocarbon emissions, in grams for the mode

CO_{2mass}=carbon monoxide emissions, in grams for the mode

CO_{2mass}=carbon dioxide emissions, in grams for the mode

α=The atomic hydrogen to carbon ratio of the fuel.

[59 FR 31335, June 17, 1994. Redesignated and amended at 63 FR 56996, 57018, Oct. 23, 1998; 70 FR 40446, July 13, 2005]

§ 89.425 [Reserved]

APPENDIX A TO SUBPART E OF PART 89—FIGURES

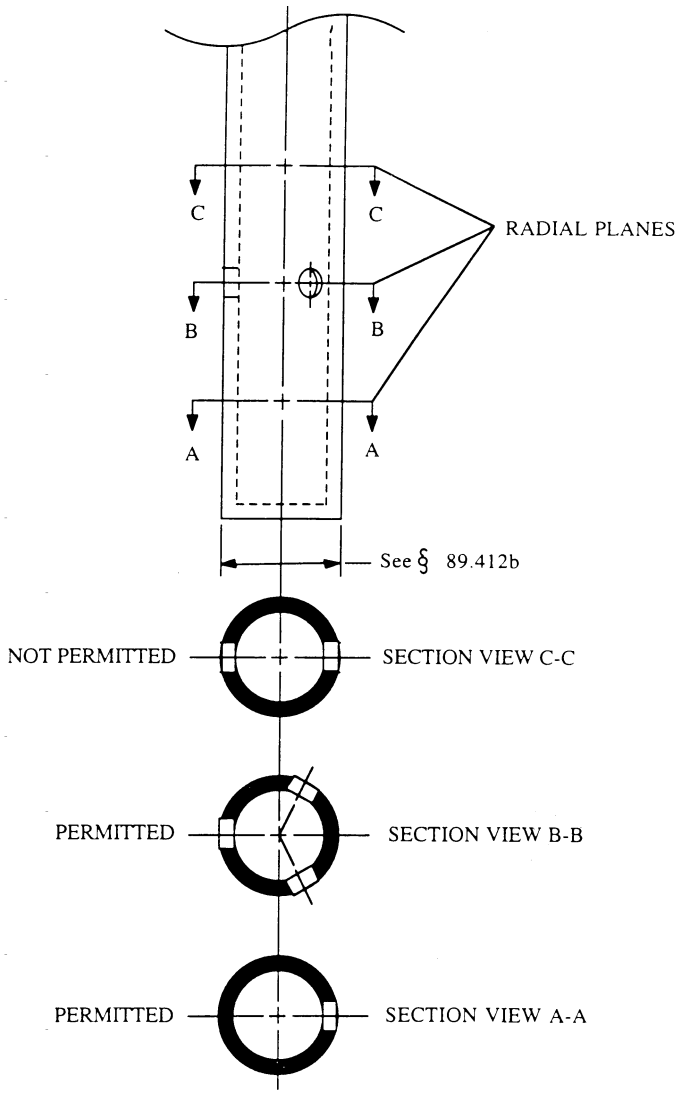

Figure 1.--SAMPLE PROBE AND TYPICAL HOLE SPACING

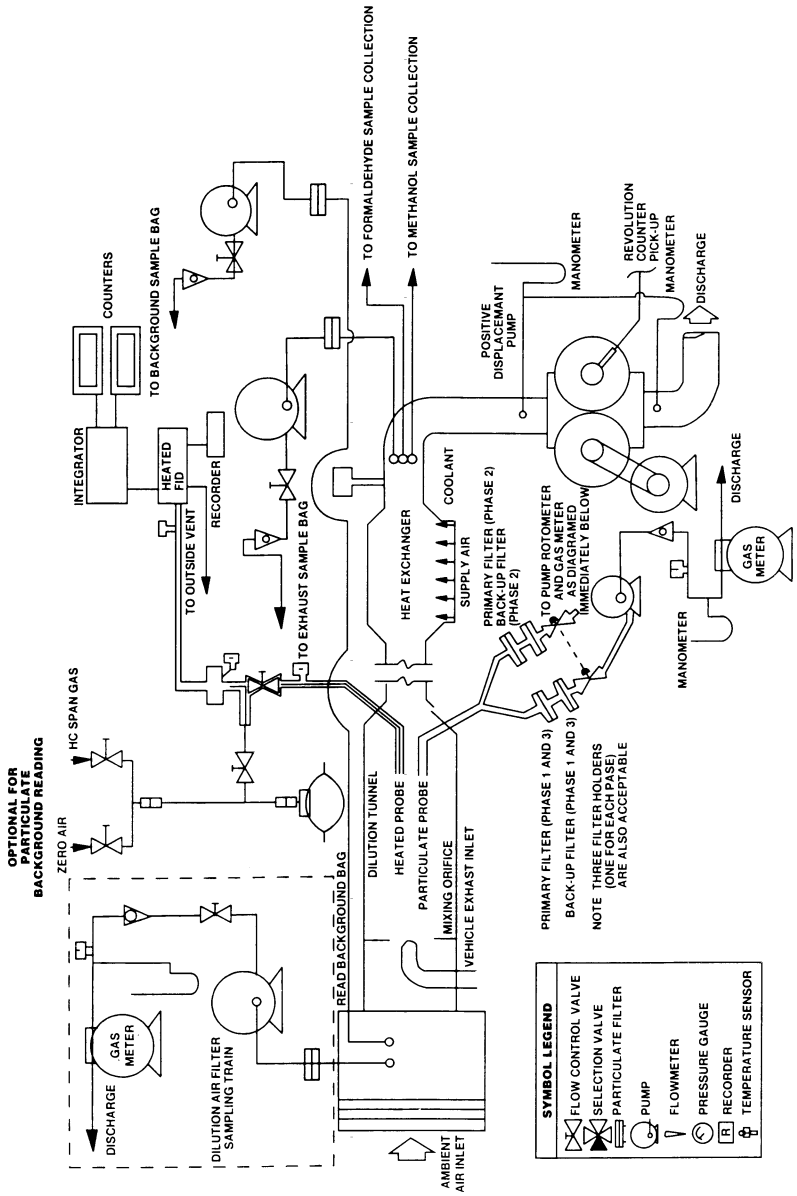

Figure 2 — Gaseous & Particulate Emissions Sampling System (PDP-CVS)

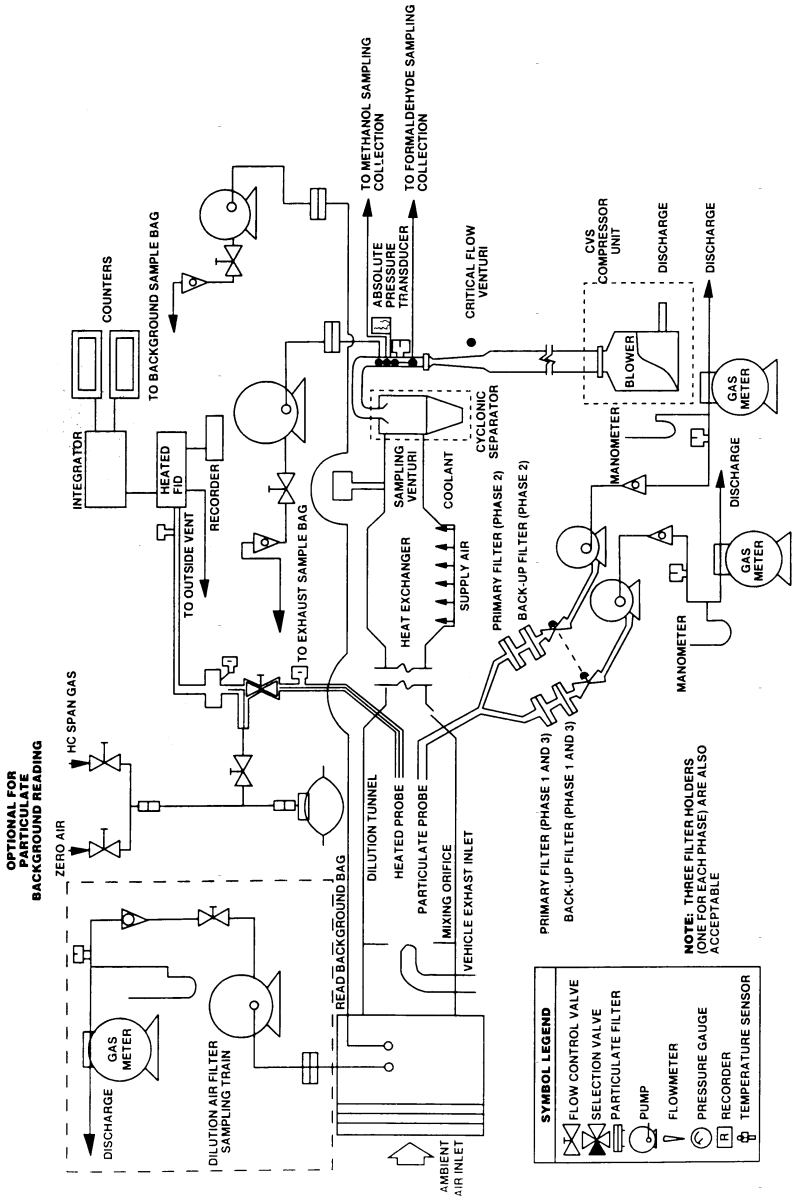

Figure 3. — Gaseous and Particulate Emissions Sampling System (CVF-CVS)

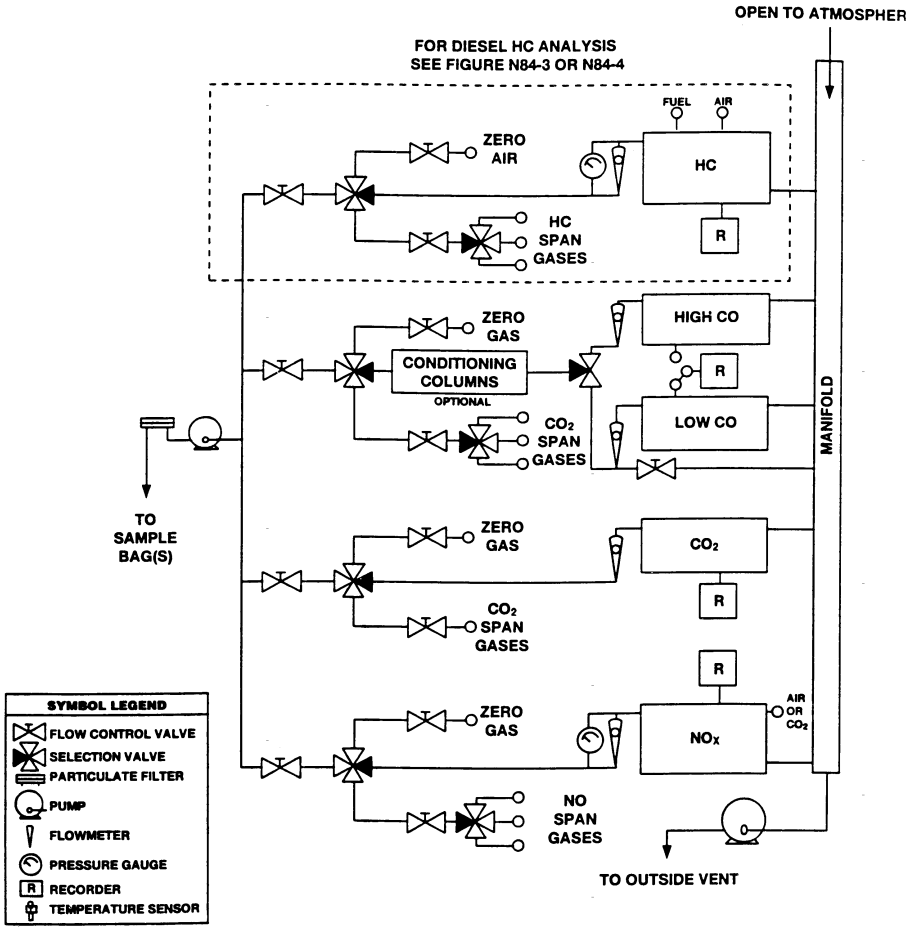

Figure 4. — Exhaust Gas Analytical System

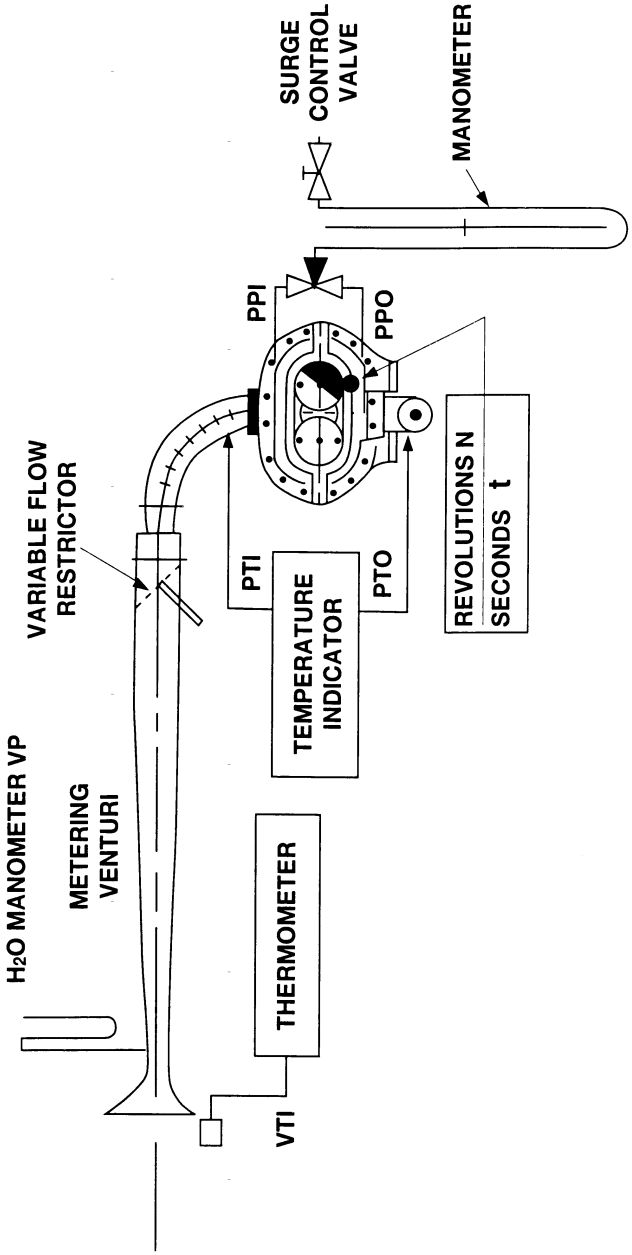

Figure 5. — PDP-CVS Calibration Configuration

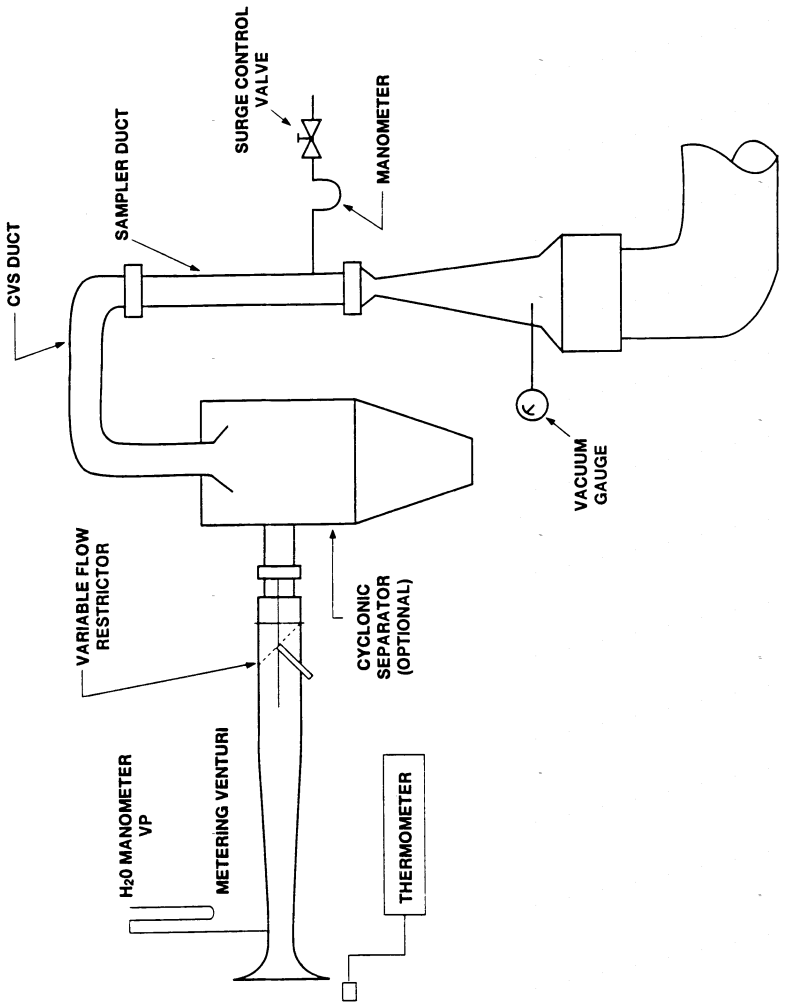

Figure 6. — CFV-CVS Calibration Configuration

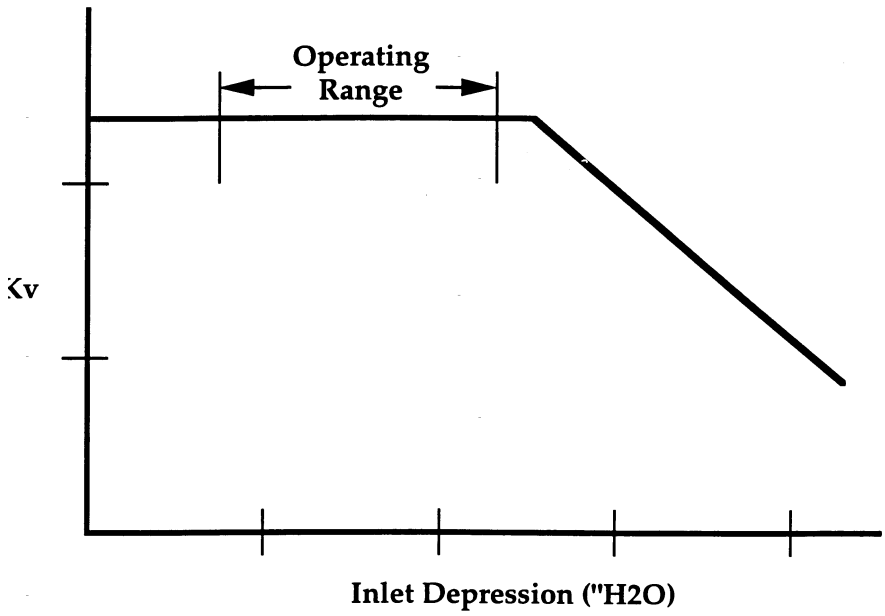

Figure 7.—Sonic Flow Choking

APPENDIX B TO SUBPART E OF PART 89—TABLES

TABLE 1—8-MODE TEST CYCLE FOR VARIABLE-SPEED ENGINES

Test segment	Mode number	Engine speed [1]	Observed torque [2] (percent of max. observed)	Minimum time in mode (minutes)	Weighting factors
1	1	Rated	100	5.0	0.15
1	2	Rated	75	5.0	0.15
1	3	Rated	50	5.0	0.15
1	4	Rated	10	5.0	0.10
2	5	Int	100	5.0	0.10
2	6	Int	75	5.0	0.10
2	7	Int	50	5.0	0.10
2	8	Idle	0	5.0	0.15

[1] Engine speed (non-idle): ±2 percent of point. Engine speed (idle): Within manufacturer's specifications. Idle speed is specified by the manufacturer.
[2] Torque (non-idle): Throttle fully open for 100 percent points. Other non-idle points: ±2 percent of engine maximum value. Torque (idle): Throttle fully closed. Load less than 5 percent of peak torque.

TABLE 2—5-MODE TEST CYCLE FOR CONSTANT-SPEED ENGINES

Mode number	Engine[1] Speed	Observed torque [2] (percent of max. observed)	Minimum time in mode (minutes)	Weighting factors
1	Rated	100	5.0	0.05
2	Rated	75	5.0	0.25
3	Rated	50	5.0	0.30

TABLE 2—5-MODE TEST CYCLE FOR CONSTANT-SPEED ENGINES—Continued

Mode number	Engine[1] Speed	Observed torque[2] (percent of max. observed)	Minimum time in mode (minutes)	Weighting factors
4	Rated	25	5.0	0.30
5	Rated	10	5.0	0.10

[1] Engine speed: ±2 percent of point.
[2] Torque: Throttle fully open for 100 percent point. Other points: ±2 percent of engine maximum value.

TABLE 3—6-MODE TEST CYCLE FOR ENGINES RATED UNDER 19 kW

Mode number	Engine speed[1]	Observed torque[2] (percent of max. observed)	Minimum time in mode (minutes)	Weighting factors
1	Rated	100	5.0	0.09
2	Rated	75	5.0	0.20
3	Rated	50	5.0	0.29
4	Rated	25	5.0	0.30
5	Rated	10	5.0	0.07
6	Idle	0	5.0	0.05

[1] Engine speed (non-idle): ±2 percent of point. Engine speed (idle): Within manufacturer's specifications. Idle speed is specified by the manufacturer.
[2] Torque (non-idle): Throttle fully open for operation at 100 percent point. Other nonidle points: ±2 percent of engine maximum value. Torque (idle): Throttle fully closed. Load less than 5 percent of peak torque.

TABLE 4—4-MODE TEST CYCLE FOR PROPULSION MARINE DIESEL ENGINES

Mode number	Engine speed[1] (percent of max. observed)	Observed power[2] (percent of max. observed)	Minimum time in mode (minutes)	Weighting factors
1	100	100	5.0	0.20
2	91	75	5.0	0.50
3	80	50	5.0	0.15
4	63	25	5.0	0.15

[1] Engine speed: ±2 percent of point.
[2] Power: Throttle fully open for operation at 100 percent point. Other points: ±2 percent of engine maximum value.

[63 FR 57019, Oct. 23, 1998]

Subpart F—Selective Enforcement Auditing

§ 89.501 Applicability.

The requirements of subpart F are applicable to all nonroad engines subject to the provisions of subpart A of part 89.

[59 FR 31335, June 17, 1994. Redesignated at 63 FR 56996, Oct. 23, 1998]

§ 89.502 Definitions.

The definitions in subpart A of this part apply to this subpart. The following definitions also apply to this subpart.

Acceptable quality level (AQL) means the maximum percentage of failing engines that can be considered a satisfactory process average for sampling inspections.

Configuration means any subclassification of an engine family which can be described on the basis of gross power, emission control system, governed speed, injector size, engine calibration, and other parameters as designated by the Administrator.

Inspection criteria means the pass and fail numbers associated with a particular sampling plan.

Test engine means an engine in a test sample.

Test sample means the collection of engines selected from the population of an engine family for emission testing.

[59 FR 31335, June 17, 1994. Redesignated at 63 FR 56996, Oct. 23, 1998]

§ 89.503 Test orders.

(a) A test order addressed to the manufacturer is required for any testing under this subpart.

(b) The test order is signed by the Assistant Administrator for Air and Radiation or his or her designee. The test order must be delivered in person by an EPA enforcement officer or EPA authorized representative to a company representative or sent by registered mail, return receipt requested, to the manufacturer's representative who signed the application for certification submitted by the manufacturer, pursuant to the requirements of the applicable section of subpart B of this part. Upon receipt of a test order, the manufacturer must comply with all of the provisions of this subpart and instructions in the test order.

(c) *Information included in test order.* (1) The test order will specify the engine family to be selected for testing, the manufacturer's engine assembly plant or associated storage facility or port facility (for imported engines) from which the engines must be selected, the time and location at which engines must be selected, and the procedure by which engines of the specified family must be selected. The test order may specify the configuration to be audited and/or the number of engines to be selected per day. Engine manufacturers are required to select a minimum of four engines per day unless an alternate selection procedure is approved pursuant to § 89.507(a), or unless total production of the specified configuration is less than four engines per day. If total production of the specified configuration is less than four engines per day, the manufacturer selects the actual number of engines produced per day.

(2) The test order may include alternate families to be selected for testing at the Administrator's discretion in the event that engines of the specified family are not available for testing because those engines are not being manufactured during the specified time or are not being stored at the specified assembly plant, associated storage facilities, or port of entry.

(3) If the specified family is not being manufactured at a rate of at least two engines per day in the case of manufacturers specified in § 89.508(g)(1), or one engine per day in the case of manufacturers specified in § 89.508(g)(2), over the expected duration of the audit, the Assistant Administrator or her or his designated representative may select engines of the alternate family for testing.

(4) In addition, the test order may include other directions or information essential to the administration of the required testing.

(d) A manufacturer may submit a list of engine families and the corresponding assembly plants, associated storage facilities, or (in the case of imported engines) port facilities from which the manufacturer prefers to have engines selected for testing in response to a test order. In order that a manufacturer's preferred location be considered for inclusion in a test order for a particular engine family, the list must be submitted prior to issuance of the test order. Notwithstanding the fact that a manufacturer has submitted the list, the Administrator may order selection at other than a preferred location.

(e) Upon receipt of a test order, a manufacturer must proceed in accordance with the provisions of this subpart.

(f)(1) During a given model year, the Administrator may not issue to a manufacturer more Selective Enforcement Auditing (SEA) test orders than an annual limit determined to be the larger of the following factors:

(i) Production factor, determined by dividing the projected nonroad engine sales in the United States for that model year, as declared by the manufacturer under § 89.505(c)(1), by 16,000 and rounding to the nearest whole number. If the projected sales are less than 8,000, this factor is one.

(ii) Family factor, determined by dividing the manufacturer's total number of certified engine families by five and rounding to the nearest whole number.

(2) If a manufacturer submits to EPA in writing prior to or during the model year a reliable sales projection update or adds engine families or deletes engine families from its production, that information is used for recalculating

the manufacturer's annual limit of SEA test orders.

(3) Any SEA test order for which the family fails under § 89.510 or for which testing is not completed is not counted against the annual limit.

(4) When the annual limit has been met, the Administrator may issue additional test orders to test those families for which evidence exists indicating noncompliance. An SEA test order issued on this basis will include a statement as to the reason for its issuance.

[59 FR 31335, June 17, 1994. Redesignated at 63 FR 56996, Oct. 23, 1998]

§ 89.504 Testing by the Administrator.

(a) The Administrator may require by test order under § 89.503 that engines of a specified family be selected in a manner consistent with the requirements of § 89.507 and submitted to the Administrator at the place designated for the purpose of conducting emission tests. These tests will be conducted in accordance with § 89.508 to determine whether engines manufactured by the manufacturer conform with the regulations with respect to which the certificate of conformity was issued.

(b) *Designating official data.* (1) Whenever the Administrator conducts a test on a test engine or the Administrator and manufacturer each conduct a test on the same test engine, the results of the Administrator's test comprise the official data for that engine.

(2) Whenever the manufacturer conducts all tests on a test engine, the manufacturer's test data is accepted as the official data, provided that if the Administrator makes a determination based on testing conducted under paragraph (a) of this section that there is a substantial lack of agreement between the manufacturer's test results and the Administrator's test results, no manufacturer's test data from the manufacturer's test facility will be accepted for purposes of this subpart.

(c) If testing conducted under § 89.503 is unacceptable under paragraph (b)(2) of this section, the Administrator must:

(1) Notify the manufacturer in writing of the Administrator's determination that the test facility is inappropriate for conducting the tests required by this subpart and the reasons therefor; and

(2) Reinstate any manufacturer's data upon a showing by the manufacturer that the data acquired under § 89.503 was erroneous and the manufacturer's data was correct.

(d) The manufacturer may request in writing that the Administrator reconsider the determination in paragraph (b)(2) of this section based on data or information which indicates that changes have been made to the test facility and these changes have resolved the reasons for disqualification.

[59 FR 31335, June 17, 1994. Redesignated at 63 FR 56996, Oct. 23, 1998]

§ 89.505 Maintenance of records; submittal of information.

(a) The manufacturer of any new nonroad engine subject to any of the provisions of this subpart must establish, maintain, and retain the following adequately organized and indexed records:

(1) *General records.* A description of all equipment used to test engines in accordance with § 89.508 pursuant to a test order issued under this subpart, specifically, the equipment requirements specified in §§ 86.884–8 and 86.884–9 of this chapter and the equipment requirements specified in §§ 89.306, 89.308, 89.309, and 89.312.

(2) *Individual records.* These records pertain to each audit conducted pursuant to this subpart and include:

(i) The date, time, and location of each test;

(ii) The number of hours of service accumulated on the engine when the test began and ended;

(iii) The names of all supervisory personnel involved in the conduct of the audit;

(iv) A record and description of any repairs performed prior to and/or subsequent to approval by the Administrator, giving the date, associated time, justification, name(s) of the authorizing personnel, and names of all supervisory personnel responsible for the conduct of the repair;

(v) The date the engine was shipped from the assembly plant, associated storage facility or port facility, and date the engine was received at the testing facility;

(vi) A complete record of all emission tests performed pursuant to this subpart (except tests performed directly by EPA), including all individual worksheets and/or other documentation relating to each test, or exact copies thereof, to be in accordance with the record requirements specified in § 89.404 or § 86.884–10 of this chapter.

(vii) A brief description of any significant audit events not described under paragraph (a)(2) of this section, commencing with the test engine selection process and including such extraordinary events as engine damage during shipment.

(3) The manufacturer must record test equipment description, pursuant to paragraph (a)(1) of this section, for each test cell that can be used to perform emission testing under this subpart.

(b) The manufacturer must retain all records required to be maintained under this subpart for a period of one year after completion of all testing in response to a test order. Records may be retained as hard copy or reduced to microfilm, floppy disc, and so forth, depending upon the manufacturer's record retention procedure; provided, that in every case, all the information contained in the hard copy is retained.

(c) The manufacturer must, upon request by the Administrator, submit the following information with regard to engine production:

(1) Projected production for each engine configuration within each engine family for which certification is requested;

(2) Number of engines, by configuration and assembly plant, scheduled for production for the time period designated in the request;

(3) Number of engines, by configuration and by assembly plant, storage facility or port facility, scheduled to be stored at facilities for the time period designated in the request; and

(4) Number of engines, by configuration and assembly plant, produced during the time period designated in the request that are complete for introduction into commerce.

(d) Nothing in this section limits the Administrator's discretion in requiring the manufacturer to retain additional records or submit information not specifically required by this section.

(e) All reports, submissions, notifications, and requests for approvals made under this subpart are addressed to: Director, Engine Programs and Compliance Division (6405–J), U.S. Environmental Protection Agency, 1200 Pennsylvania Ave., NW., Washington, DC 20460.

[59 FR 31335, June 17, 1994. Redesignated and amended at 63 FR 56996, 57020, Oct. 23, 1998]

§ 89.506 Right of entry and access.

(a) To allow the Administrator to determine whether a manufacturer is complying with the provisions of this subpart and a test order issued thereunder, EPA enforcement officers or EPA authorized representatives may enter during operating hours and upon presentation of credentials any of the following places:

(1) Any facility where any engine to be introduced into commerce, including ports of entry, or any emission-related component is manufactured, assembled, or stored;

(2) Any facility where any tests conducted pursuant to a test order or any procedures or activities connected with these tests are or were performed;

(3) Any facility where any engine which is being tested, was tested, or will be tested is present; and

(4) Any facility where any record or other document relating to any of the above is located.

(b) Upon admission to any facility referred to in paragraph (a) of this section, EPA enforcement officers or EPA authorized representatives are authorized to perform the following inspection-related activities:

(1) To inspect and monitor any aspects of engine manufacture, assembly, storage, testing and other procedures, and the facilities in which these procedures are conducted;

(2) To inspect and monitor any aspect of engine test procedures or activities, including, but not limited to, engine selection, preparation, service accumulation, emission test cycles, and maintenance and verification of test equipment calibration;

(3) To inspect and make copies of any records or documents related to the assembly, storage, selection, and testing

of an engine in compliance with a test order; and

(4) To inspect and photograph any part or aspect of any engine and any component used in the assembly thereof that is reasonably related to the purpose of the entry.

(c) EPA enforcement officers or EPA authorized representatives are authorized to obtain reasonable assistance without cost from those in charge of a facility to help the officers perform any function listed in this subpart and they are authorized to request the recipient of a test order to make arrangements with those in charge of a facility operated for the manufacturer's benefit to furnish reasonable assistance without cost to EPA whether or not the recipient controls the facility.

(1) Reasonable assistance includes, but is not limited to, clerical, copying, interpretation and translation services; the making available on an EPA enforcement officer's or EPA authorized representative's request of personnel of the facility being inspected during their working hours to inform the EPA enforcement officer or EPA authorized representative of how the facility operates and to answer the officer's or representative's questions; and the performance on request of emission tests on any engine which is being, has been, or will be used for SEA testing.

(2) A manufacturer may be compelled to cause the personal appearance of any employee at such a facility before an EPA enforcement officer or EPA authorized representative by written request for his appearance, signed by the Assistant Administrator for Air and Radiation, served on the manufacturer. Any such employee who has been instructed by the manufacturer to appear will be entitled to be accompanied, represented, and advised by counsel.

(d) EPA enforcement officers or EPA authorized representatives are authorized to seek a warrant or court order authorizing the EPA enforcement officers or EPA authorized representatives to conduct activities related to entry and access as authorized in this section, as appropriate, to execute the functions specified in this section. EPA enforcement officers or authorized representatives may proceed ex parte to obtain a warrant whether or not the EPA enforcement officers or EPA authorized representatives first attempted to seek permission of the recipient of the test order or the party in charge of the facilities in question to conduct activities related to entry and access as authorized in this section.

(e) A recipient of a test order must permit an EPA enforcement officer(s) or EPA authorized representative(s) who presents a warrant or court order to conduct activities related to entry and access as authorized in this section and as described in the warrant or court order. The recipient must also cause those in charge of its facility or a facility operated for its benefit to permit entry and access as authorized in this section pursuant to a warrant or court order whether or not the recipient controls the facility. In the absence of a warrant or court order, an EPA enforcement officer(s) or EPA authorized representative(s) may conduct activities related to entry and access as authorized in this section only upon the consent of the recipient of the test order or the party in charge of the facilities in question.

(f) It is not a violation of this part or the Clean Air Act for any person to refuse to permit an EPA enforcement officer(s) or EPA authorized representative(s) to conduct activities related to entry and access as authorized in this section if the officer(s) or representative(s) appears without a warrant or court order.

(g) A manufacturer is responsible for locating its foreign testing and manufacturing facilities in jurisdictions where local law does not prohibit an EPA enforcement officer(s) or EPA authorized representative(s) from conducting the entry and access activities specified in this section. EPA will not attempt to make any inspections which it has been informed that local foreign law prohibits.

[59 FR 31335, June 17, 1994. Redesignated and amended at 63 FR 56996, 57020, Oct. 23, 1998]

§ 89.507 Sample selection.

(a) Engines comprising a test sample will be selected at the location and in the manner specified in the test order. If a manufacturer determines that the test engines cannot be selected in the manner specified in the test order, an

alternative selection procedure may be employed, provided the manufacturer requests approval of the alternative procedure prior to the start of test sample selection, and the Administrator approves the procedure.

(b) The manufacturer must assemble the test engines of the family selected for testing using its normal mass production process for engines to be distributed into commerce. If, between the time the manufacturer is notified of a test order and the time the manufacturer finishes selecting test engines, the manufacturer implements any change(s) in its production processes, including quality control, which may reasonably be expected to affect the emissions of the engines selected, then the manufacturer must, during the audit, inform the Administrator of such changes. If the test engines are selected at a location where they do not have their operational and emission control systems installed, the test order will specify the manner and location for selection of components to complete assembly of the engines. The manufacturer must assemble these components onto the test engines using normal assembly and quality control procedures as documented by the manufacturer.

(c) No quality control, testing, or assembly procedures will be used on the test engine or any portion thereof, including parts and subassemblies, that have not been or will not be used during the production and assembly of all other engines of that family, unless the Administrator approves the modification in assembly procedures pursuant to paragraph (b) of this section.

(d) The test order may specify that an EPA enforcement officer(s) or authorized representative(s), rather than the manufacturer, select the test engines according to the method specified in the test order.

(e) The order in which test engines are selected determines the order in which test results are to be used in applying the sampling plan in accordance with § 89.510.

(f) The manufacturer must keep on hand all untested engines, if any, comprising the test sample until a pass or fail decision is reached in accordance with § 89.510(e). The manufacturer may ship any tested engine which has not failed the requirements as set forth in § 89.510(b). However, once the manufacturer ships any test engine, it relinquishes the prerogative to conduct retests as provided in § 89.508(i).

[59 FR 31335, June 17, 1994. Redesignated at 63 FR 56996, Oct. 23, 1998]

§ 89.508 Test procedures.

(a)(1) For nonroad engines subject to the provisions of this subpart, the prescribed test procedures are the nonroad engine 8-mode test procedure as described in subpart E of this part, the federal smoke test as described in part 86, subpart I of this chapter, and the particulate test procedure as adopted in the California Regulations for New 1996 and Later Heavy-Duty Off-Road Diesel Cycle Engines. This procedure is incorporated by reference. See § 89.6.

(2) The Administrator may, on the basis of a written application by a manufacturer, prescribe test procedures other than those specified in paragraph (a)(1) of this section for any nonroad engine he or she determines is not susceptible to satisfactory testing using the procedures specified in paragraph (a)(1) of this section.

(b)(1) The manufacturer may not adjust, repair, prepare, or modify the engines selected for testing and may not perform any emission tests on engines selected for testing pursuant to the test order unless this adjustment, repair, preparation, modification, and/or tests are documented in the manufacturer's engine assembly and inspection procedures and are actually performed or unless these adjustments and/or tests are required or permitted under this subpart or are approved in advance by the Administrator.

(2) The Administrator may adjust or cause to be adjusted any engine parameter which the Administrator has determined to be subject to adjustment for certification and Selective Enforcement Audit testing in accordance with § 89.108, to any setting within the physically adjustable range of that parameter, as determined by the Administrator in accordance with § 89.108, prior to the performance of any tests. However, if the idle speed parameter is one which the Administrator has determined to be subject to adjustment, the

Administrator may not adjust it to any setting which causes a lower engine idle speed than would have been possible within the physically adjustable range of the idle speed parameter if the manufacturer had accumulated 125 hours of service on the engine under paragraph (c) of this section, all other parameters being identically adjusted for the purpose of the comparison. The manufacturer may be requested to supply information needed to establish an alternate minimum idle speed. The Administrator, in making or specifying these adjustments, may consider the effect of the deviation from the manufacturer's recommended setting on emission performance characteristics as well as the likelihood that similar settings will occur on in-use engines. In determining likelihood, the Administrator may consider factors such as, but not limited to, the effect of the adjustment on engine performance characteristics and surveillance information from similar in-use engines.

(c) *Service Accumulation.* Prior to performing exhaust emission testing on an SEA test engine, the manufacturer may accumulate on each engine a number of hours of service equal to the greater of 125 hours or the number of hours the manufacturer accumulated during certification on the emission data engine corresponding to the family specified in the test order.

(1) Service accumulation must be performed in a manner using good engineering judgment to obtain emission results representative of normal production engines. This service accumulation must be consistent with the new engine break-in instructions contained in the applicable owner's manual.

(2) The manufacturer must accumulate service at a minimum rate of 16 hours per engine during each 24-hour period, unless otherwise approved by the Administrator.

(i) The first 24-hour period for service begins as soon as authorized checks, inspections, and preparations are completed on each engine.

(ii) The minimum service or mileage accumulation rate does not apply on weekends or holidays.

(iii) If the manufacturer's service or target is less than the minimum rate specified (16 hours per day), then the minimum daily accumulation rate is equal to the manufacturer's service target.

(3) Service accumulation must be completed on a sufficient number of test engines during consecutive 24-hour periods to assure that the number of engines tested per day fulfills the requirements of paragraphs (g)(1) and (g)(2) of this section.

(d) The manufacturer may not perform any maintenance on test engines after selection for testing, nor may the Administrator allow deletion of any engine from the test sequence, unless requested by the manufacturer and approved by the Administrator before any engine maintenance or deletion.

(e) The manufacturer must expeditiously ship test engines from the point of selection to the test facility. If the test facility is not located at or in close proximity to the point of selection, the manufacturer must assure that test engines arrive at the test facility within 24 hours of selection. The Administrator may approve more time for shipment based upon a request by the manufacturer accompanied by a satisfactory justification.

(f) If an engine cannot complete the service accumulation or an emission test because of a malfunction, the manufacturer may request that the Administrator authorize either the repair of that engine or its deletion from the test sequence.

(g) Whenever a manufacturer conducts testing pursuant to a test order issued under this subpart, the manufacturer must notify the Administrator within one working day of receipt of the test order as to which test facility will be used to comply with the test order. If no test cells are available at a desired facility, the manufacturer must provide alternate testing capability satisfactory to the Administrator.

(1) A manufacturer with projected nonroad engine sales for the United States market for the applicable year of 7,500 or greater must complete emission testing at a minimum rate of two engines per 24-hour period, including each voided test and each smoke test.

(2) A manufacturer with projected nonroad engine sales for the United States market for the applicable year

of less than 7,500 must complete emission testing at a minimum rate of one engine per 24-hour period, including each voided test and each smoke test.

(3) The Administrator may approve a lower daily rate of emission testing based upon a request by a manufacturer accompanied by a satisfactory justification.

(h) The manufacturer must perform test engine selection, shipping, preparation, service accumulation, and testing in such a manner as to assure that the audit is performed in an expeditious manner.

(i) *Retesting*. (1) The manufacturer may retest any engines tested during a Selective Enforcement Audit once a fail decision for the audit has been reached in accordance with § 89.510(e).

(2) The Administrator may approve retesting at other times based upon a request by the manufacturer accompanied by a satisfactory justification.

(3) The manufacturer may retest each engine a total of three times. The manufacturer must test each engine or vehicle the same number of times. The manufacturer may accumulate additional service before conducting a retest, subject to the provisions of paragraph (c) of this section.

(j) A manufacturer must test engines with the test procedure specified in subpart E of this part to demonstrate compliance with the exhaust emission standard (or applicable FEL) for oxides of nitrogen. If alternate procedures were used in certification pursuant to § 89.114, then those alternate procedures must be used.

[59 FR 31335, June 17, 1994. Redesignated at 63 FR 56996, Oct. 23, 1998]

§ 89.509 Calculation and reporting of test results.

(a) Initial test results are calculated following the applicable test procedure specified in § 89.508(a). The manufacturer rounds these results, in accordance with ASTM E29–93a, to the number of decimal places contained in the applicable emission standard expressed to one additional significant figure. This procedure has been incorporated by reference. See § 89.6.

(b) Final test results are calculated by summing the initial test results derived in paragraph (a) of this section for each test engine, dividing by the number of tests conducted on the engine, and rounding in accordance with the procedure specified in paragraph (a) of this section to the same number of decimal places contained in the applicable standard expressed to one additional significant figure.

(c) Within five working days after completion of testing of all engines pursuant to a test order, the manufacturer must submit to the Administrator a report which includes the following information:

(1) The location and description of the manufacturer's exhaust emission test facilities which were utilized to conduct testing reported pursuant to this section;

(2) The applicable standards and/or FEL against which the engines were tested;

(3) A description of the engine and its associated emission-related component selection method used;

(4) For each test conducted;

(i) Test engine description, including:

(A) Configuration and engine family identification;

(B) Year, make, and build date;

(C) Engine identification number; and

(D) Number of hours of service accumulated on engine prior to testing;

(ii) Location where service accumulation was conducted and description of accumulation procedure and schedule;

(iii) Test number, date, test procedure used, initial test results before and after rounding, and final test results for all exhaust emission tests, whether valid or invalid, and the reason for invalidation, if applicable;

(iv) A complete description of any modification, repair, preparation, maintenance, and/or testing which was performed on the test engine and has not been reported pursuant to any other paragraph of this subpart and will not be performed on all other production engines;

(v) Where an engine was deleted from the test sequence by authorization of the Administrator, the reason for the deletion;

(vi) Any other information the Administrator may request relevant to the determination as to whether the new engines being manufactured by the

manufacturer do in fact conform with the regulations with respect to which the certificate of conformity was issued; and

(5) The following statement and endorsement:

This report is submitted pursuant to sections 213 and 208 of the Clean Air Act. This Selective Enforcement Audit was conducted in complete conformance with all applicable regulations under 40 CFR part 89 *et seq.* and the conditions of the test order. No emission-related changes to production processes or quality control procedures for the engine family tested have been made between receipt of the test order and conclusion of the audit. All data and information reported herein is, to the best of (Company Name) knowledge, true and accurate. I am aware of the penalties associated with violations of the Clean Air Act and the regulations thereunder. (Authorized Company Representative.)

[59 FR 31335, June 17, 1994. Redesignated and amended at 63 FR 56996, 57020, Oct. 23, 1998]

§ 89.510 Compliance with acceptable quality level and passing and failing criteria for selective enforcement audits.

(a) The prescribed acceptable quality level is 40 percent.

(b) A failed engine is one whose final test results pursuant to § 89.509(b), for one or more of the applicable pollutants, exceed the applicable emission standard or family emission level.

(c) The manufacturer must test engines comprising the test sample until a pass decision is reached for all pollutants or a fail decision is reached for one pollutant. A pass decision is reached when the cumulative number of failed engines, as defined in paragraph (b) of this section, for each pollutant is less than or equal to the pass decision number, as defined in paragraph (d) of this section, appropriate to the cumulative number of engines tested. A fail decision is reached when the cumulative number of failed engines for one or more pollutants is greater than or equal to the fail decision number, as defined in paragraph (d) of this section, appropriate to the cumulative number of engines tested.

(d) The pass and fail decision numbers associated with the cumulative number of engines tested are determined by using the tables in appendix A to this subpart, ''Sampling Plans for Selective Enforcement Auditing of Nonroad Engines,'' appropriate to the projected sales as made by the manufacturer in its report to EPA under § 89.505(c)(1). In the tables in appendix A to this subpart, sampling plan ''stage'' refers to the cumulative number of engines tested. Once a pass or fail decision has been made for a particular pollutant, the number of engines with final test results exceeding the emission standard for that pollutant shall not be considered any further for the purposes of the audit.

(e) Passing or failing of an SEA occurs when the decision is made on the last engine required to make a decision under paragraph (c) of this section.

(f) The Administrator may terminate testing earlier than required in paragraph (c) of this section.

[59 FR 31335, June 17, 1994. Redesignated at 63 FR 56996, Oct. 23, 1998]

§ 89.511 Suspension and revocation of certificates of conformity.

(a) The certificate of conformity is suspended with respect to any engine failing pursuant to paragraph (b) of § 89.510 effective from the time that testing of that engine is completed.

(b) The Administrator may suspend the certificate of conformity for a family which does not pass an SEA, pursuant to paragraph § 89.510(c), based on the first test or all tests conducted on each engine. This suspension will not occur before ten days after failure of the audit, unless the manufacturer requests an earlier suspension.

(c) If the results of testing pursuant to these regulations indicate that engines of a particular family produced at one plant of a manufacturer do not conform to the regulations with respect to which the certificate of conformity was issued, the Administrator may suspend the certificate of conformity with respect to that family for engines manufactured by the manufacturer at all other plants.

(d) Notwithstanding the fact that engines described in the application may be covered by a certificate of conformity, the Administrator may suspend such certificate immediately in whole or in part if the Administrator finds any one of the following infractions to be substantial:

(1) The manufacturer refuses to comply with the provisions of a test order issued by the Administrator under § 89.503.

(2) The manufacturer refuses to comply with any of the requirements of this subpart.

(3) The manufacturer submits false or incomplete information in any report or information provided to the Administrator under this subpart.

(4) The manufacturer renders inaccurate any test data submitted under this subpart.

(5) An EPA enforcement officer(s) or EPA authorized representative(s) is denied the opportunity to conduct activities related to entry and access as authorized in this subpart and a warrant or court order is presented to the manufacturer or the party in charge of a facility in question.

(6) An EPA enforcement officer(s) or EPA authorized representative(s) is unable to conduct activities related to entry and access as authorized in § 89.506 because a manufacturer has located a facility in a foreign jurisdiction where local law prohibits those activities.

(e) The Administrator must notify the manufacturer in writing of any suspension or revocation of a certificate of conformity in whole or in part; a suspension or revocation is effective upon receipt of the notification or ten days, except that the certificate is immediately suspended with respect to any failed engines as provided for in paragraph (a) of this section.

(f) The Administrator may revoke a certificate of conformity for a family when the certificate has been suspended pursuant to paragraph (b) or (c) of this section if the proposed remedy for the nonconformity, as reported by the manufacturer to the Administrator, is one requiring a design change or changes to the engine and/or emission control system as described in the application for certification of the affected family.

(g) Once a certificate has been suspended for a failed engine, as provided for in paragraph (a) of this section, the manufacturer must take the following actions before the certificate is reinstated for that failed engine:

(1) Remedy the nonconformity.

(2) Demonstrate that the engine conforms to applicable standards or family emission levels by retesting the engine in accordance with these regulations.

(3) Submit a written report to the Administrator, after successful completion of testing on the failed engine, which contains a description of the remedy and test results for each engine in addition to other information that may be required by this part.

(h) Once a certificate for a failed family has been suspended pursuant to paragraph (b) or (c) of this section, the manufacturer must take the following actions before the Administrator will consider reinstating the certificate:

(1) Submit a written report to the Administrator which identifies the reason for the noncompliance of the engines, describes the proposed remedy, including a description of any proposed quality control and/or quality assurance measures to be taken by the manufacturer to prevent future occurrences of the problem, and states the date on which the remedies will be implemented.

(2) Demonstrate that the engine family for which the certificate of conformity has been suspended does in fact comply with these regulations by testing engines selected from normal production runs of that engine family, at the plant(s), port facility(ies) or associated storage facility(ies) specified by the Administrator, in accordance with the conditions specified in the initial test order. If the manufacturer elects to continue testing individual engines after suspension of a certificate, the certificate is reinstated for an engine actually determined to be in conformance with the applicable standards or family emission levels through testing in accordance with the applicable test procedures, provided that the Administrator has not revoked the certificate pursuant to paragraph (f) of this section.

(i) Once the certificate for a family has been revoked under paragraph (f) of this section and the manufacturer desires to continue introduction into commerce of a modified version of that family, the following actions must be taken before the Administrator may consider issuing a certificate for that modified family:

(1) If the Administrator determines that the proposed change(s) in engine design may have an effect on emission performance deterioration, the Administrator will notify the manufacturer, within five working days after receipt of the report in paragraph (g) of this section, whether subsequent testing under this subpart is sufficient to evaluate the proposed change or changes or whether additional testing is required; and

(2) After implementing the change or changes intended to remedy the nonconformity, the manufacturer must demonstrate that the modified engine family does in fact conform with these regulations by testing engines selected from normal production runs of that modified engine family in accordance with the conditions specified in the initial test order. If the subsequent audit results in passing of the audit, the Administrator will reissue the certificate or issue a new certificate, as the case may be, to include that family, provided that the manufacturer has satisfied the testing requirements of paragraph (i)(1) of this section. If the subsequent audit is failed, the revocation remains in effect. Any design change approvals under this subpart are limited to the family affected by the test order.

(j) At any time subsequent to an initial suspension of a certificate of conformity for a test engine pursuant to paragraph (a) of this section, but not later than 15 days (or such other period as may be allowed by the Administrator) after notification of the Administrator's decision to suspend or revoke a certificate of conformity in whole or in part pursuant to paragraph (b), (c), or (f) of this section, a manufacturer may request a hearing as to whether the tests have been properly conducted or any sampling methods have been properly applied.

(k) Any suspension of a certificate of conformity under paragraph (d) of this section:

(1) will be in writing and will include the offer of an opportunity for a hearing conducted in accordance with §§ 89.512, 89.513, and 89.514 and

(2) need not apply to engines no longer in the hands of the manufacturer.

(l) After the Administrator suspends or revokes a certificate of conformity pursuant to this section and prior to the commencement of a hearing under § 89.512, if the manufacturer demonstrates to the Administrator's satisfaction that the decision to suspend, revoke, or void the certificate was based on erroneous information, the Administrator will reinstate the certificate.

(m) To permit a manufacturer to avoid storing non-test engines when conducting an audit of a family subsequent to a failure of an SEA and while reauditing of the failed family, it may request that the Administrator conditionally reinstate the certificate for that family. The Administrator may reinstate the certificate subject to the condition that the manufacturer consents to recall all engines of that family produced from the time the certificate is conditionally reinstated if the family fails the subsequent audit at the level of the standard and to remedy any nonconformity at no expense to the owner.

[59 FR 31335, June 17, 1994. Redesignated at 63 FR 56996, Oct. 23, 1998]

§ 89.512 Request for public hearing.

(a) If the manufacturer disagrees with the Administrator's decision under § 89.511 (b), (c), (d), or (f) to suspend or revoke a certificate or disputes the basis for an automatic suspension pursuant to § 89.511 (a), the manufacturer may request a public hearing.

(b) The manufacturer's request must be filed with the Administrator not later than 15 days after the Administrator's notification of the decision to suspend or revoke, unless otherwise specified by the Administrator. The manufacturer must simultaneously serve two copies of this request upon the Director of the Engine Programs and Compliance Division and file two copies with the Hearing Clerk of the Agency. Failure of the manufacturer to request a hearing within the time provided constitutes a waiver of the right to a hearing. Subsequent to the expiration of the period for requesting a hearing as of right, the Administrator may, at her or his discretion and for good cause shown, grant the manufacturer a

hearing to contest the suspension or revocation.

(c) The manufacturer's request for a public hearing must include:

(1) A statement as to which engine configuration(s) within a family is to be the subject of the hearing;

(2) A concise statement of the issues to be raised by the manufacturer at the hearing, except that in the case of the hearing requested under § 89.511(j), the hearing is restricted to the following issues:

(i) Whether tests have been properly conducted, specifically, whether the tests were conducted in accordance with applicable regulations under this part and whether test equipment was properly calibrated and functioning;

(ii) Whether sampling plans have been properly applied, specifically, whether sampling procedures specified in appendix A of this subpart were followed and whether there exists a basis for distinguishing engines produced at plants other than the one from which engines were selected for testing which would invalidate the Administrator's decision under § 89.511(c);

(3) A statement specifying reasons why the manufacturer believes it will prevail on the merits of each of the issues raised; and

(4) A summary of the evidence which supports the manufacturer's position on each of the issues raised.

(d) A copy of all requests for public hearings will be kept on file in the Office of the Hearing Clerk and will be made available to the public during Agency business hours.

[59 FR 31335, June 17, 1994. Redesignated and amended at 63 FR 56996, 57020, Oct. 23, 1998]

§ 89.513 Administrative procedures for public hearing.

(a) The Presiding Officer is an Administrative Law Judge appointed pursuant to 5 U.S.C. 3105 (see also 5 CFR part 930 as amended).

(b) The Judicial Officer is an officer or employee of the Agency appointed as a Judicial Officer by the Administrator, pursuant to this section, who meets the qualifications and performs functions as follows:

(1) *Qualifications*. A Judicial Officer may be a permanent or temporary employee of the Agency who performs other duties for the Agency. The Judicial Officer may not be employed by the Office of Enforcement or have any connection with the preparation or presentation of evidence for a hearing held pursuant to this subpart. The Judicial Officer must be a graduate of an accredited law school and a member in good standing of a recognized Bar Association of any state or the District of Columbia.

(2) *Functions*. The Administrator may consult with the Judicial Officer or delegate all or part of the Administrator's authority to act in a given case under this section to a Judicial Officer, provided that this delegation does not preclude the Judicial Officer from referring any motion or case to the Administrator when the Judicial Officer determines such referral to be appropriate.

(c) For the purposes of this section, one or more Judicial Officers may be designated. As work requires, a Judicial Officer may be designated to act for the purposes of a particular case.

(d) *Summary decision*. (1) In the case of a hearing requested under § 89.511(j), when it clearly appears from the data and other information contained in the request for a hearing that no genuine and substantial question of fact or law exists with respect to the issues specified in § 89.512(c)(2), the Administrator may enter an order denying the request for a hearing and reaffirming the original decision to suspend or revoke a certificate of conformity.

(2) In the case of a hearing requested under § 89.512 to challenge a suspension of a certificate of conformity for the reasons specified in § 89.511(d), when it clearly appears from the data and other information contained in the request for the hearing that no genuine and substantial question of fact or law exists with respect to the issue of whether the refusal to comply with the provisions of a test order or any other requirement of § 89.503 was caused by conditions and circumstances outside the control of the manufacturer, the Administrator may enter an order denying the request for a hearing and suspending the certificate of conformity.

(3) Any order issued under paragraph (d)(1) or (d)(2) of this section has the

force and effect of a final decision of the Administrator, as issued pursuant to § 89.515.

(4) If the Administrator determines that a genuine and substantial question of fact or law does exist with respect to any of the issues referred to in paragraphs (d)(1) and (d)(2) of this section, the Administrator will grant the request for a hearing and publish a notice of public hearing in the FEDERAL REGISTER or by such other means as the Administrator finds appropriate to provide notice to the public.

(e) *Filing and service.* (1) An original and two copies of all documents or papers required or permitted to be filed pursuant to this section and § 89.512(c) must be filed with the Hearing Clerk of the Agency. Filing is considered timely if mailed, as determined by the postmark, to the Hearing Clerk within the time allowed by this section and § 89.512(b). If filing is to be accomplished by mailing, the documents must be sent to the address set forth in the notice of public hearing referred to in paragraph (d)(4) of this section.

(2) To the maximum extent possible, testimony will be presented in written form. Copies of written testimony will be served upon all parties as soon as practicable prior to the start of the hearing. A certificate of service will be provided on or accompany each document or paper filed with the Hearing Clerk. Documents to be served upon the Director of the Engine Programs and Compliance Division must be sent by registered mail to: Director, Engine Programs and Compliance Division (6405–J), U.S. Environmental Protection Agency, 1200 Pennsylvania Ave., NW., Washington, DC 20460. Service by registered mail is complete upon mailing.

(f) *Computation of time.* (1) In computing any period of time prescribed or allowed by this section, except as otherwise provided, the day of the act or event from which the designated period of time begins to run is not included. Saturdays, Sundays, and federal legal holidays are included in computing the period allowed for the filing of any document or paper, except that when the period expires on a Saturday, Sunday, or federal legal holiday, the period is extended to include the next following business day.

(2) A prescribed period of time within which a party is required or permitted to do an act is computed from the time of service, except that when service is accomplished by mail, three days will be added to the prescribed period.

(g) *Consolidation.* The Administrator or the Presiding Officer in his discretion may consolidate two or more proceedings to be held under this section for the purpose of resolving one or more issues whenever it appears that consolidation will expedite or simplify consideration of these issues. Consolidation does not affect the right of any party to raise issues that could have been raised if consolidation had not occurred.

(h) *Hearing date.* To the extent possible hearings under § 89.512 will be scheduled to commence within 14 days of receipt of the application in § 89.512.

[59 FR 31335, June 17, 1994. Redesignated and amended at 63 FR 56996, 57020, Oct. 23, 1998]

§ 89.514 Hearing procedures.

The procedures provided in § 86.1014–84 (i) to (s) apply for hearings requested pursuant to § 89.512, suspension, revocation, or voiding of a certificate of conformity.

[59 FR 31335, June 17, 1994. Redesignated at 63 FR 56996, Oct. 23, 1998]

§ 89.515 Appeal of hearing decision.

The procedures provided in § 86.1014–84 (t) to (aa) apply for appeals filed with respect to hearings held pursuant to § 89.514.

[59 FR 31335, June 17, 1994. Redesignated at 63 FR 56996, Oct. 23, 1998]

§ 89.516 Treatment of confidential information.

The provisions for treatment of confidential information as described in § 89.7 apply.

[59 FR 31335, June 17, 1994. Redesignated at 63 FR 56996, Oct. 23, 1998]

APPENDIX A TO SUBPART F OF PART 89—SAMPLING PLANS FOR SELECTIVE ENFORCEMENT AUDITING OF NONROAD ENGINES

TABLE 1—SAMPLING PLAN CODE LETTER

Annual engine family sales	Code letter
20–50	AA [1]
20–99	A
100–299	B
300–499	C
500 or greater	D

[1] A manufacturer may optionally use either the sampling plan for code letter "AA" or sampling plan for code letter "A" for Selective Enforcement Audits of engine families with annual sales between 20 and 50 engines. Additionally, the manufacturer may switch between these plans during the audit.

TABLE 2—SAMPLING PLAN FOR CODE LETTER "AA"

[Sample inspection criteria]

Stage	Pass No.	Fail No.
1	(1)	(2)
2	(1)	(2)
3	0	(2)
4	0	(2)
5	1	5
6	1	6
7	2	6
8	2	7
9	3	7
10	3	8
11	4	8
12	4	9
13	5	9
14	5	10
15	6	10
16	6	10
17	7	10
18	8	10
19	8	10
20	9	10

[1] Test sample passing not permitted at this stage.
[2] Test sample failure not permitted at this stage.

TABLE 3—SAMPLING PLAN FOR CODE LETTER "A"

[Sample inspection criteria]

Stage	Pass No.	Fail No.
1	(1)	(2)
2	(1)	(2)
3	(1)	(2)
4	0	(2)
5	0	(2)
6	1	6
7	1	7
8	2	7
9	2	8
10	3	8
11	3	8
12	4	9
13	5	10
14	5	10
15	6	11
16	6	11
17	7	12

TABLE 3—SAMPLING PLAN FOR CODE LETTER "A"—Continued

[Sample inspection criteria]

Stage	Pass No.	Fail No.
18	7	12
19	8	13
20	8	13
21	9	14
22	10	14
23	10	15
24	11	15
25	11	16
26	12	16
27	12	17
28	13	17
29	14	17
30	16	17

[1] Test sample passing not permitted at this stage.
[2] Test sample failure not permitted at this stage.

TABLE 4—SAMPLING PLAN FOR CODE LETTER "B"

[Sample Inspection Criteria]

Stage	Pass No.	Fail No.
1	(1)	(2)
2	(1)	(2)
3	(1)	(2)
4	(1)	(2)
5	0	(2)
6	1	6
7	1	7
8	2	7
9	2	8
10	3	8
11	3	9
12	4	9
13	4	10
14	5	10
15	5	11
16	6	12
17	6	12
18	7	13
19	8	13
20	8	14
21	9	14
22	9	15
23	10	15
24	10	16
25	11	16
26	11	17
27	12	17
28	12	18
29	13	18
30	13	19
31	14	19
32	14	20
33	15	20
34	16	21
35	16	21
36	17	22
37	17	22
38	18	22
39	18	22
40	21	22

[1] Test sample passing not permitted at this stage.
[2] Test sample failure not permitted at this stage.

TABLE 5—SAMPLING PLAN FOR CODE LETTER "C"

[Sample Inspection Criteria]

Stage	Pass No.	Fail No.
1	(1)	(2)
2	(1)	(2)
3	(1)	(2)
4	(1)	(2)
5	0	(2)
6	0	6
7	1	7
8	2	7
9	2	8
10	3	9
11	3	9
12	4	10
13	4	10
14	5	11
15	5	11
16	6	12
17	6	12
18	7	13
19	7	13
20	8	14
21	8	14
22	9	15
23	10	15
24	10	16
25	11	16
26	11	17
27	12	17
28	12	18
29	13	18
30	13	19
31	14	19
32	14	20
33	15	20
34	15	21
35	16	21
36	16	22
37	17	22
38	18	23
39	18	23
40	19	24
41	19	24
42	20	25
43	20	25
44	21	26
45	21	27
46	22	27
47	22	27
48	23	27
49	23	27
50	26	27

[1] Test sample passing not permitted at this stage.
[2] Test sample failure not permitted at this stage.

TABLE 6—SAMPLING PLAN FOR CODE LETTER "D"

[Sample Inspection Criteria]

Stage	Pass No.	Fail No.
1	(1)	(2)
2	(1)	(2)
3	(1)	(2)
4	(1)	(2)
5	0	(2)
6	0	6
7	1	7
8	2	8
9	2	8

TABLE 6—SAMPLING PLAN FOR CODE LETTER "D"—Continued

[Sample Inspection Criteria]

Stage	Pass No.	Fail No.
10	3	9
11	3	9
12	4	10
13	4	10
14	5	11
15	5	11
16	6	12
17	6	12
18	7	13
19	7	13
20	8	14
21	8	14
22	9	15
23	9	15
24	10	16
25	11	16
26	11	17
27	12	17
28	12	18
29	13	19
30	13	19
31	14	20
32	14	20
33	15	21
34	15	21
35	16	22
36	16	22
37	17	23
38	17	23
39	18	24
40	18	24
41	19	25
42	19	26
43	20	26
44	21	27
45	21	27
46	22	28
47	22	28
48	23	29
49	23	29
50	24	30
51	24	30
52	25	31
53	25	31
54	26	32
55	26	32
56	27	33
57	27	33
58	28	33
59	28	33
60	32	33

[1] Test sample passing not permitted at this stage.
[2] Test sample failure not permitted at this stage.

[59 FR 31335, June 17, 1994, as amended at 70 FR 40446, July 13, 2005]

Subpart G—Importation of Nonconforming Nonroad Engines

§ 89.601 Applicability.

(a) Except where otherwise indicated, this subpart is applicable to nonroad engines for which the Administrator has promulgated regulations under this part prescribing emission standards

and nonroad vehicles and equipment containing such nonroad engines that are offered for importation or imported into the United States, but which engines, at the time of conditional importation, are not covered by certificates of conformity issued under section 213 and section 206(a) of the Clean Air Act as amended (that is, which are nonconforming nonroad engines as defined in § 89.602), and this part. Compliance with regulations under this subpart does not relieve any person or entity from compliance with other applicable provisions of the Clean Air Act.

(b) Regulations prescribing further procedures for the importation of nonroad engines and nonroad vehicles and equipment into the customs territory of the United States, as defined in 19 U.S.C. 1202, are set forth in U.S. Bureau of Customs regulations.

(c) For the purposes of this subpart, the term ''nonroad engine'' includes all nonroad engines incorporated into nonroad equipment or nonroad vehicles at the time they are imported or offered for import into the United States.

(d) Importers must complete the appropriate EPA declaration form before importing an engine. These forms are available on the Internet at *http://www.epa.gov/OTAQ/imports/* or by phone at 734–214–4100. Importers must keep the forms for five years and make them available upon request.

[59 FR 31335, June 17, 1994. Redesignated at 63 FR 56996, Oct. 23, 1998, as amended at 72 FR 53129, Sept. 18, 2007]

§ 89.602 Definitions.

The definitions in subpart A of this part apply to this subpart. The following definitions also apply to this subpart.

Certificate of conformity. The document issued by the Administrator under section 213 and section 206(a) of the Act.

Currently valid certificate of conformity. A certificate of conformity for which the current date is within the effective period as specified on the certificate of conformity, and which has not been withdrawn, superseded, voided, suspended, revoked, or otherwise rendered invalid.

Fifteen working day hold period. The period of time between a request for final admission and the automatic granting of final admission (unless EPA intervenes) for a nonconforming nonroad engine conditionally imported pursuant to § 89.605 or § 89.609. Day one of the hold period is the first working day (see definition for ''working day'' in this section) after the Engine Programs and Compliance Division of EPA receives a complete and valid application for final admission.

Independent commercial importer (ICI). An importer who is not an original engine manufacturer (OEM) (see definition below), but is the entity in whose name a certificate of conformity for a class of nonroad engines has been issued.

Model year for imported engines. The manufacturer's annual production period (as determined by the Administrator) which includes January 1 of the calendar year; provided, that if the manufacturer has no annual production period, the term ''model year'' means the calendar year in which a nonroad engine is modified. An independent commercial importer (ICI) is deemed to have produced a nonroad engine when the ICI has modified (including labeling) the nonconforming nonroad engine to meet applicable emission requirements.

Nonconforming nonroad engine. A nonroad engine which is not covered by a certificate of conformity prior to final or conditional admission (or for which such coverage has not been adequately demonstrated to EPA) and which has not been finally admitted into the United States under the provisions of § 89.605 or § 89.609.

Original engine manufacturer (OEM). The entity which originally manufactured the nonroad engine.

Original production (OP) year. The calendar year in which the nonroad engine was originally produced by the OEM.

Original production (OP) years old. The age of a nonroad engine as determined by subtracting the original production year of the nonroad engine from the calendar year of importation.

Production changes. Those changes in nonroad engine configuration, equipment, or calibration which are made by an OEM or ICI in the course of nonroad engine production and required to be reported under § 89.123.

United States. United States includes the customs territory of the United States as defined in 19 U.S.C. 1202, and the Virgin Islands, Guam, American Samoa, and the Commonwealth of the Northern Mariana Islands.

Useful life. A period of time as specified in subpart B of this part which for a nonconforming nonroad engine begins at the time of resale (for a nonroad engine owned by the ICI at the time of importation) or release to the owner (for a nonroad engine not owned by the ICI at the time of importation) of the nonroad engine by the ICI after modification and/or testing pursuant to § 89.605 or § 89.609.

Working day. Any day on which federal government offices are open for normal business. Saturdays, Sundays, and official federal holidays are not working days.

[59 FR 31335, June 17, 1994. Redesignated and amended at 63 FR 56996, 57021, Oct. 23, 1998]

§ 89.603 General requirements for importation of nonconforming nonroad engines.

(a) A nonconforming nonroad engine offered for importation into the United States is to be imported only by an Independent Commercial Importer (ICI) who is a holder of a currently valid certificate of conformity unless an exemption or exclusion is granted by the Administrator under § 89.611 of this subpart. For a nonroad engine imported pursuant to § 89.605, the ICI must hold a currently valid certificate of conformity for that specific nonroad engine model.

(b) Any nonroad engine imported into the United States must have a legible unique engine identification number permanently affixed to or engraved on the engine.

(c) Final admission may not be granted unless:

(1) The nonroad engine is covered by a certificate of conformity issued under subpart B of this part in the name of the ICI and the ICI has complied with all requirements of § 89.605; or

(2) The nonroad engine is modified and emission tested in accordance with the provisions of § 89.609 and the ICI has complied with all other requirements of § 89.609; or

(3) The nonroad engine is exempted or excluded under § 89.611.

(d) The ICI must submit to the Engine Programs and Compliance Division of EPA a copy of all approved applications for certification used to obtain certificates of conformity for the purpose of importing nonconforming nonroad engines pursuant to § 89.605 or § 89.609. In addition, the ICI must submit to the Engine Programs and Compliance Division a copy of all approved production changes implemented pursuant to § 89.605 or subpart B of this part. Documentation submitted pursuant to this paragraph (d) must be provided to the Engine Programs and Compliance Division within 10 working days of approval of the certification application (or production change) by EPA.

(e)(1) The applicable emission standards for engines imported by an ICI under this subpart are the emission standards applicable to the Original Production (OP) year of the engine.

(2) Where engine manufacturers have choices in emission standards for one or more pollutants in a given model year, the standard that applies to the ICI is the least stringent standard for that pollutant applicable to the OP year for the appropriate power category.

(3) ICIs may not generate, use or trade emission credits or otherwise participate in any way in the averaging, banking and trading program.

(4) An ICI may import no more than a total of five engines under this part for any given model year, except as allowed by paragraph (e)(5) of this section. For ICIs owned by a parent company, the importation limit includes importation by the parent company and all its subsidiaries.

(5) An ICI may exceed the limit outlined in paragraph (e)(4) of this section, provided that any engines in excess of the limit meet the emission standards and other requirements outlined in the applicable provisions of Part 89 or 1039 of this chapter for the model year in which the engine is modified (instead

of the emission standards and other requirements applicable for the OP year of the vehicle/engine).

[59 FR 31335, June 17, 1994. Redesignated and amended at 63 FR 56996, 57021, Oct. 23, 1998; 70 FR 40446, July 13, 2005]

§ 89.604 Conditional admission.

(a) A nonroad engine offered for importation under § 89.605 or § 89.609 may be conditionally admitted into the United States. These engines are refused final admission, unless at the time of conditional admission the importer has submitted to the Administrator a written report that the subject nonroad engine has been permitted conditional admission pending EPA approval of its application for final admission under § 89.605 or § 89.609. This written report is to contain the following:

(1) Identification of the importer of the nonroad engine and the importer's address, telephone number, and taxpayer identification number;

(2) Identification of the nonroad engine owner, the owner's address, telephone number, and taxpayer identification number;

(3) Identification of the nonroad engine including make, model, identification number, and original production year;

(4) Information indicating under what provision of these regulations the nonroad engine is to be imported;

(5) Identification of the place where the subject nonroad engine is to be stored until EPA approval of the importer's application to the Administrator for final admission;

(6) Authorization for EPA enforcement officers to conduct inspections or testing otherwise permitted by the Act or regulations thereunder;

(7) Identification of the Independent Commercial Importer's (ICI) certificate of conformity that permits the ICI to import that nonroad engine (for importation under § 89.605 or § 89.609); and

(8) Such other information as is deemed necessary by the Administrator.

(b) EPA will not require a U.S. Customs Service bond for a nonconforming nonroad engine which is imported under § 89.605 or § 89.609. The period of conditional admission may not exceed 120 days. Nonroad engines imported under § 89.605 or § 89.609 may not be operated during the period of conditional admission except for that operation necessary to comply with the requirements of this subpart. During the period of conditional admission applicable to § 89.605 or § 89.609, the importer must store the nonroad engine at a location where the Administrator has reasonable access to the nonroad engine for inspection.

(c) During the period of conditional admission under § 89.605 or § 89.609, an ICI may transfer responsibility of a nonroad engine to another qualified ICI for the purposes of complying with this subpart.

(1) The transferee ICI must be a holder of a currently valid certificate of conformity for the specific nonroad engine being transferred or be authorized to import the nonroad engine pursuant to § 89.609 as of the transfer date. The transferee ICI must comply with all the requirements of § 89.603, § 89.604, and either § 89.605 or § 89.609, as applicable.

(2) For the purpose of this subpart, the transferee ICI has ''imported'' the nonroad engine as of the transfer date as designated in a written record that is signed by both ICIs.

(3) The ICI that originally imported the nonroad engine is responsible for all requirements of this subpart from the actual date of importation until the date of transfer as designated in the written record. The transferee ICI is responsible for all requirements of this subpart beginning on the date of transfer.

(4) A copy of the written record is to be submitted to the Engine Programs and Compliance Division of EPA within five working days of the transfer date.

(d) Notwithstanding any other requirement of this subpart or U.S. Customs Service regulations, an ICI may also assume responsibility for the modification and testing of a nonconforming nonroad engine which was previously imported by another party. The ICI must be a holder of a currently valid certificate of conformity for that specific nonroad engine or authorized to import it pursuant to § 89.609 at the time of assuming such responsibility.

The ICI must comply with all the requirements of § 89.603, § 89.604, and either § 89.605 or § 89.609, as applicable. For the purposes of this subpart, the ICI has ''imported'' the nonroad engine as of the date the ICI assumes responsibility for the modification and testing of the nonroad engine. The ICI must submit written notification to the Engine Programs and Compliance Division of EPA within 10 working days of the assumption of that responsibility.

[59 FR 31335, June 17, 1994. Redesignated and amended at 63 FR 56996, 57021, Oct. 23, 1998]

§ 89.605 Final admission of certified nonroad engines.

(a) A nonroad engine may be finally admitted into the United States upon approval of the ICI's application to the Administrator. The application is made by completing EPA forms in accordance with EPA instructions. The application contains:

(1) The information required in § 89.604(a);

(2) Information demonstrating that the nonroad engine has been modified in accordance with a valid certificate of conformity. Demonstration is made in one of the following ways:

(i) The ICI attests that the nonroad engine has been modified in accordance with the provisions of the ICI's certificate of conformity; presents to EPA a statement written by the applicable Original Engine Manufacturer that the Original Engine Manufacturer must provide to the ICI, and to EPA, information concerning production changes to the class of nonroad engines described in the ICI's application for certification; delivers to the Engine Programs and Compliance Division of EPA notification by the ICI of any production changes already implemented by the Original Engine Manufacturer at the time of application and their effect on emissions; and obtains from EPA written approval to use this demonstration option; or

(ii) The ICI attests that the nonroad engine has been modified in accordance with the provisions of the ICI's certificate of conformity. The ICI also attests that it has conducted, within 120 days of entry, an applicable and valid emission test on every third nonroad engine imported under that certificate of conformity to demonstrate compliance with Federal emission requirements. The test is to be conducted at a laboratory located within the United States. Sequencing of the tests is determined by the date of importation of each nonroad engine beginning with the prototype nonroad engine used to obtain the applicable certificate of conformity. Should the ICI exceed a threshold of 300 nonroad engines imported under the certificate of conformity without adjustments or other changes in accordance with paragraph (a)(3) of this section, the amount of required testing is reduced to every fifth nonroad engine.

(3) The results of every emission test which the ICI conducted on the nonroad engine pursuant to paragraph (a)(2)(ii) of this section. Should a subject nonroad engine fail an emission test at any time, the following procedures are applicable:

(i) The ICI may either:

(A) Conduct one retest that involves no adjustment of the nonroad engine from the previous test (for example, adjusting the RPM, timing, air-to-fuel ratio, and so forth) other than adjustments to adjustable parameters that, upon inspection, were found to be out of tolerance. When such an allowable adjustment is made, the parameter may be reset only to the specified (that is, nominal) value (and not any other value within the tolerance band); or

(B) Initiate a change in production (production change) under the provisions of subpart B of this part that causes the nonroad engine to meet federal emission requirements.

(ii) If the ICI chooses to retest in accordance with paragraph (a)(3)(i)(A) of this section:

(A) The retests are to be completed no later than five working days subsequent to the first emission test;

(B) Should the subject nonroad engine fail the second emission test, then the ICI must initiate a change in production (a production change) under the provisions of subpart B of this part that causes the nonroad engine to meet federal emission requirements.

(iii) If the ICI chooses to initiate a change in production (a production change) under the provisions of subpart B of this part that causes the nonroad

engine to meet federal requirements, a change involving adjustments of adjustable nonroad engine parameters (for example, adjusting the RPM, timing, air/fuel ratio) represents a change in the specified (that is, nominal) value to be deemed acceptable by EPA.

(iv) A production change made in accordance with this section is to be implemented on all subsequent nonroad engines imported under the certificate of conformity after the date of importation of the nonroad engine which gave rise to the production change.

(v) Commencing with the first nonroad engine receiving the production change, every third nonroad engine imported under the certificate of conformity is to be emission tested to demonstrate compliance with federal emission requirements until, as in paragraph (a)(2)(ii) of this section, a threshold of 300 nonroad engines imported under the certificate of conformity is exceeded without adjustments or other changes in accordance with paragraph (a)(3)(i)(A) of this section, at which time the amount of required emission testing is reduced to every fifth nonroad engine.

(vi) A report concerning these production changes is to be made to the Engine Programs and Compliance Division of EPA within ten working days of initiation of the production change. The cause of any failure of an emission test is to be identified, if known;

(4) The applicable deterioration factor, if any;

(5) The emission test results adjusted by the deterioration factor;

(6) Other information that may be specified by applicable regulations or on the certificate of conformity under which the nonroad engine has been modified in order to assure compliance with requirements of the Act;

(7) All information required under § 89.610 related to maintenance, warranties, and labeling;

(8) An attestation by the ICI that the ICI is responsible for the nonroad engine's compliance with federal emission requirements, regardless of whether the ICI owns the nonroad engine imported under this section;

(9) The name, address, and telephone number of the person who the ICI prefers to receive EPA notification under § 89.605(c);

(10) An attestation by the ICI that all requirements of § 89.607 and § 89.610 have been met; and

(11) Other information as is deemed necessary by the Administrator.

(b) EPA approval for final admission of a nonroad engine under this section is to be presumed not to have been granted if a requirement of this subpart has not been met. This includes, but is not limited to, properly modifying the nonroad engine to be in conformity in all material respects with the description in the application for certification or not complying with the provisions of § 89.605(a)(2) or if the final emission test results, adjusted by the deterioration factor, if applicable, do not comply with applicable emission standards.

(c) Except as provided in paragraph (b) of this section, EPA approval for final admission of a nonroad engine under this section is presumed to have been granted if the ICI does not receive oral or written notice from EPA to the contrary within 15 working days of the date that the Engine Programs and Compliance Division of EPA receives the ICI's application under paragraph (a) of this section. EPA notice of nonapproval may be made to any employee of the ICI. It is the responsibility of the ICI to ensure that the Engine Programs and Compliance Division of EPA receives the application and to confirm the date of receipt. During this 15 working day hold period, the nonroad engine is to be stored at a location where the Administrator has reasonable access to the nonroad engine for the Administrator's inspection. The storage is to be within 50 miles of the ICI's testing facility to allow the Administrator reasonable access for inspection and testing. A storage facility not meeting this criterion must be approved in writing by the Administrator prior to the submittal of the ICI's application under paragraph (a) of this section.

[59 FR 31335, June 17, 1994. Redesignated and amended at 63 FR 56996, 57021, Oct. 23, 1998]

§ 89.606 Inspection and testing of imported nonroad engines.

(a) In order to allow the Administrator to determine whether an ICI's production nonroad engines comply with applicable emission requirements or requirements of this subpart, an EPA enforcement officer or authorized representative is authorized to conduct inspections and/or tests of nonroad engines imported by the ICI. The ICI must admit an EPA enforcement officer or authorized representative during operating hours to any of the following places upon demand and upon presentation of credentials:

(1) Any facility where any nonroad engine imported by the ICI under this subpart was or is being modified, tested, or stored and

(2) Any facility where any record or other document relating to modification, testing, or storage of the nonroad engine, or required to be kept by § 89.607, is located. EPA may require inspection or testing of nonroad engines at the test facility used by the ICI or at an EPA-designated testing facility, with transportation and/or testing costs to be borne by the ICI.

(b) Upon admission to any facility referred to in paragraph (a) of this section, an EPA enforcement officer or authorized representative is allowed during operating hours:

(1) To inspect and monitor any part or aspect of activities relating to the ICI's modification, testing, and/or storage of nonroad engines imported under this subpart;

(2) To inspect and make copies of record(s) or document(s) related to modification, testing, and storage of a nonroad engine, or required by § 89.607; and

(3) To inspect and photograph any part or aspect of the nonroad engine and any component used in the assembly thereof.

(c) An EPA enforcement officer or authorized representative is to be furnished, by those in charge of a facility being inspected, with such reasonable assistance as the officer or representative may request to help discharge any function listed in this subpart. An ICI must make arrangements with those in charge of a facility operated for its benefit to furnish such reasonable assistance without charge to EPA. Reasonable assistance includes, but is not limited to, clerical, copying, interpretation and translation services, and the making available on request of personnel of the facility being inspected during their working hours to inform the EPA enforcement officer or authorized representative of how the facility operates and to answer any questions.

(d) The requirements of paragraphs (a), (b), and (c) of this section apply whether or not the ICI owns or controls the facility in question. It is the ICI's responsibility to make such arrangements as may be necessary to assure compliance with paragraphs (a), (b), and (c) of this section. Failure to do so, or other failure to comply with paragraphs (a), (b), or (c), may result in sanctions as provided for in the Act or § 89.612(e).

(e) Duly designated enforcement officers are authorized to proceed ex parte to seek warrants authorizing the inspection or testing of the nonroad engines described in paragraph (a) of this section whether or not the enforcement officers first attempted to seek permission from the ICI or facility owner to inspect such nonroad engines.

(f) The results of the Administrator's test under this section comprise the official test data for the nonroad engine for purposes of determining whether the nonroad engine should be permitted final entry under § 89.605 or § 89.609.

[59 FR 31335, June 17, 1994. Redesignated at 63 FR 56996, Oct. 23, 1998]

§ 89.607 Maintenance of independent commercial importer's records.

(a) The Independent Commercial Importer (ICI) subject to any of the provisions of this subpart must establish and maintain adequately organized and indexed records, correspondence and other applicable documents relating to the certification, modification, test, purchase, sale, storage, registration, and importation of that nonroad engine. The ICI must retain such records for 8 years from the date of final admission or exportation of a nonconforming nonroad engine imported by the ICI. These records include, but are not limited to:

(1) The declaration required by U.S. Bureau of Customs regulations.

(2) Any documents or other written information required by a federal government agency to be submitted or retained in conjunction with the certification, importation or emission testing (if applicable) of nonroad engines;

(3) All bills of sale, invoices, purchase agreements, purchase orders, principal or agent agreements, and correspondence between the ICI and the ultimate purchaser of each nonroad engine and between any agents of the above parties;

(4) For nonroad engines imported by an ICI pursuant to § 89.605 or § 89.609, documents providing parts identification data (including calibration changes and part numbers and location of such parts on each nonroad engine) associated with the emission control system installed on each nonroad engine demonstrating that such emission control system was properly installed on such nonroad engine;

(5) For nonroad engines imported by an ICI pursuant to § 89.605 or § 89.609, documents demonstrating that, where applicable, each nonroad engine was emission tested in accordance with subpart E of this part and part 86, subpart I of this chapter;

(6) Documents providing evidence that the requirements of § 89.610 have been met;

(7) Documents providing evidence of compliance with all relevant requirements of the Clean Air Act;

(8) Documents providing evidence of the initiation of the 15 working day hold period (that is, evidence that the application submitted pursuant to § 89.605(a) or § 89.609(b) was received by EPA) for each nonroad engine imported pursuant to § 89.605 or § 89.609;

(9) For nonroad engines owned by the ICI at the time of importation, documents providing evidence of the date of sale and date of delivery to the ultimate purchaser, together with the name, address, and telephone number of the ultimate purchaser for each nonroad engine imported pursuant to § 89.605 or § 89.609;

(10) For nonroad engines not owned by the ICI at the time of importation, documents providing evidence and date of release to the owner (including owner's name, address, and telephone number) for each nonroad engine imported pursuant to § 89.605 or § 89.609;

(11) Documents providing evidence of the date of original manufacture of the nonroad engine. The importer may substitute an alternate date in lieu of the date of original manufacture, provided that the substitution of such alternate date is approved in advance by the Administrator.

(b) The ICI is responsible for ensuring the maintenance of records required by this section, regardless of whether or not facilities used by the ICI to comply with requirements of this subpart are under the control of the ICI.

[59 FR 31335, June 17, 1994. Redesignated at 63 FR 56996, Oct. 23, 1998]

§ 89.608 "In Use" inspections and recall requirements.

(a) Nonroad engines which have been imported by an Independent Commercial Importer (ICI) pursuant to § 89.605 or § 89.609 and finally admitted by EPA may be inspected and emission tested by EPA for the recall period specified in § 89.104(b).

(b) ICIs must maintain for eight years, and provide to EPA upon request, a list of owners or ultimate purchasers of all nonroad engines imported by the ICI under this subpart.

(c) The Administrator must notify the ICI whenever the Administrator has determined that a substantial number of a class or category of the ICI's nonroad engines, although properly maintained and used, do not conform to the regulations prescribed under section 213 of the Act when in actual use throughout their useful lives. After such notification, the recall regulations at subpart H of this part govern the ICI's responsibilities. References to a manufacturer in the recall regulations apply to the ICI.

[59 FR 31335, June 17, 1994. Redesignated at 63 FR 56996, Oct. 23, 1998]

§ 89.609 Final admission of modification nonroad engines and test nonroad engines.

(a) A nonroad engine may be imported under this section by an Independent Commercial Importer (ICI) possessing a currently valid certificate of conformity only if:

(1) The nonroad engine is six original production years old or older; and

(2) The ICI's name has not been placed on a currently effective EPA list of ICIs ineligible to import such modification/test nonroad engines, as described in paragraph (e) of this section; and

(3) The ICI has a currently valid certificate of conformity for the same nonroad engine class and fuel type as the nonroad engine being imported.

(b) A nonroad engine conditionally imported under this section may be finally admitted into the United States upon approval of the ICI's application by the Administrator. The application is to be made by completing EPA forms, in accordance with EPA instructions. The ICI includes in the application:

(1) The identification information required in § 89.604;

(2) An attestation by the ICI that the nonroad engine has been modified and tested in accordance with the applicable emission tests as specified in Subpart B § 89.119(a) of this part at a laboratory within the United States;

(3) The results of all emission tests;

(4) The applicable deterioration factor assigned by EPA, if any;

(5) The emission test results adjusted by the applicable deterioration factor;

(6) All information required under § 89.610 related to maintenance, warranties, and labeling;

(7) An attestation by the ICI that the ICI is responsible for the nonroad engine's compliance with federal emission requirements, regardless of whether the ICI owns the nonroad engine imported under this section;

(8) The applicable address and telephone number of the ICI, or the name, address, and telephone number of the person who the ICI prefers to receive EPA notification under § 89.609(d);

(9) An attestation by the ICI that all requirements of § 89.607–95 and § 89.610 have been met; and

(10) Such other information as is deemed necessary by the Administrator.

(c) EPA approval for final admission of a nonroad engine under this section is presumed not to have been granted if any requirement of this subpart has not been met.

(d) Except as provided in paragraph (c) of this section, EPA approval for final admission of a nonroad engine under this section is presumed to have been granted if the ICI does not receive oral or written notice from EPA to the contrary within 15 working days of the date that the Engine Programs and Compliance Division of EPA receives the ICI's application under paragraph (b) of this section. Such EPA notice of nonapproval may be made to any employee of the ICI. It is the responsibility of the ICI to ensure that the Engine Programs and Compliance Division of EPA receives the application and to confirm the date of receipt. During this 15 working day hold period, the nonroad engine is stored at a location where the Administrator has reasonable access to the nonroad engine for the Administrator's inspection. The storage is to be within 50 miles of the ICI's testing facility to allow the Administrator reasonable access for inspection and testing. A storage facility not meeting this criterion must be approved in writing by the Administrator prior to the submittal of the ICI's application under paragraph (b) of this section.

(e) *EPA list of ICIs ineligible to import nonroad engines for modification/test.* EPA maintains a current list of ICIs who have been determined to be ineligible to import nonroad engines under this section. The determination of ineligibility is made in accordance with the criteria and procedures in § 89.612(e) of this subpart.

(f) *Inspections.* Prior to final admission, a nonroad engine imported under this section is subject to special inspections as described in § 89.606 with these additional provisions:

(1) If, in the judgment of the Administrator, a significant number of nonroad engines imported by an ICI fail to comply with emission requirements upon inspection or retest or if the ICI fails to comply with a provision of these regulations that pertain to nonroad engines imported pursuant to § 89.609, the ICI may be placed on the EPA list of ICIs ineligible to import nonroad engines under this section as specified in paragraph (e) of this section and § 89.612(e).

(2) An individual nonroad engine which fails a retest or inspection is to be repaired and retested, as applicable, to demonstrate compliance with emission requirements before final admission is granted by EPA.

(3) Unless otherwise specified by EPA, the ICI bears the costs of all retesting under this subsection, including transportation.

(g) *In-use inspection and testing.* A nonroad engine imported under this section may be tested or inspected by EPA at any time during the recall period specified in § 89.104(b), in accordance with § 89.608(a). If, in the judgment of the Administrator, a significant number of properly maintained and used nonroad engines imported by the ICI pursuant to this section fail to meet emission requirements, the name of the ICI may be placed on the EPA list of ICIs ineligible to import nonroad engines under the modification/test provision as specified in paragraph (e) of this section and § 89.612(e).

[59 FR 31335, June 17, 1994. Redesignated and amended at 63 FR 56996, 57021, Oct. 23, 1998]

§ 89.610 Maintenance instructions, warranties, emission labeling.

The provisions of this section are applicable to all nonroad engines imported under the provisions of § 89.605 or § 89.609.

(a) *Maintenance instructions.* (1) The Independent Commercial Importer (ICI) must furnish to the purchaser, or to the owner of each nonroad engine imported under § 89.605 or § 89.609 of this subpart, written instructions for the maintenance and use of the nonroad engine by the purchaser or owner. Each application for final admission of a nonroad engine is to provide an attestation that such instructions have been or will be (if the ultimate purchaser is unknown) furnished to the purchaser or owner of such nonroad engine at the time of sale or delivery. The ICI must maintain a record of having furnished such instructions.

(2) For each nonroad engine imported under § 89.609, a copy of the maintenance and use instructions is to be maintained in a file containing the records for that nonroad engine.

(3) The maintenance and use instructions are not to contain requirements more restrictive than those set forth in § 89.109 (Maintenance Instructions) and are to be in sufficient detail and clarity that a mechanic of average training and ability can maintain or repair the nonroad engine.

(4) For each nonroad engine imported pursuant to § 89.605 or § 89.609, ICIs must furnish with each nonroad engine a list of the emission control parts, emission-related parts added by the ICI, and the emission control and emission-related parts furnished by the Original Engine Manufacturer (OEM).

(5) The information required in this section to be furnished to the ultimate purchaser or owner is to be copied and maintained in a file containing the records for that nonroad engine prior to submitting each application for final admission pursuant to § 89.605(a) or § 89.609(b).

(b) *Warranties.* (1) ICIs must submit to the Engine Programs and Compliance Division of EPA sample copies (including revisions) of any warranty documents required by this section prior to importing nonroad engines under this subpart.

(2) ICIs must provide to nonroad engine owners emission warranties identical to those required by sections 207(a) of the Act. The warranty period for each nonroad engine is to commence on the date the nonroad engine is delivered by the ICI to the ultimate purchaser or owner.

(3) ICIs must provide warranty insurance coverage by a prepaid mandatory service insurance policy underwritten by an independent insurance company. The policy is to:

(i) Be subject to the approval of the Administrator if the insurance coverage is less than the required warranty;

(ii) At a minimum, provide coverage for emission-related components installed or modified by the ICI and, to the maximum extent possible, the emission-related components installed by the OEM;

(iii) Be transferable to each successive owner for the periods specified in § 89.104(c); and

(iv) Provide that in the absence of an ICI's facility being reasonably available (that is, within 50 miles) for performance of warranty repairs, the warranty repairs may be performed anywhere.

(4) ICIs must attest in each application for final admission that the warranty requirements have been met, that the mandatory insurance has been paid and is in effect, and that certificates and statements of the warranties have been or will be provided to the owner or ultimate purchaser. A copy of the warranties and evidence that the warranties are paid and in effect is to be maintained in a file containing the records for each nonroad engine prior to submitting each application for final admission pursuant to § 89.605(a) or § 89.609(b).

(c) *Emission labeling.* (1) For each nonroad engine imported pursuant to § 89.605 or § 89.609, the ICI must affix a permanent legible label which identifies each nonroad engine and also satisfies the following:

(i) The label meets all the requirements of § 89.110 and contains the following statement ''This nonroad engine was originally produced in (month and year of original production). It has been imported and modified by (ICI's name, address, and telephone number) to conform to United States emission regulations applicable to the (year) model year.''

(ii) If the nonroad engine is owned by the ICI at the time of importation, the label also states ''This nonroad engine is warranted for five years or 3000 hours of operation from the date of purchase, whichever first occurs.''

(iii) If the nonroad engine is not owned by the ICI at the time of importation, the label states ''This nonroad engine is warranted for five years or 3000 hours of operation from the date of release to the owner, whichever first occurs.''

(iv) For nonroad engines imported under § 89.609, the label clearly states in bold letters that ''This nonroad engine has not been manufactured under a certificate of conformity but conforms to United States emission regulations under a modification/test program.'' For all nonroad engines imported pursuant to § 89.605 or § 89.609, the label contains the vacuum hose routing diagram applicable to the nonroad engines.

(2) As part of the application to the Administrator for final admission of each individual nonroad engine under § 89.609, the ICI must maintain a copy of the labels for each nonroad engine in a file containing the records for that nonroad engine prior to submitting each application for final admission. ICIs importing under § 89.605 or § 89.609 must attest to compliance with the preceding labeling requirements of this section in each application for final admission.

[59 FR 31335, June 17, 1994. Redesignated and amended at 63 FR 56996, 57021, Oct. 23, 1998]

§ 89.611 Exemptions and exclusions.

(a) Individuals, as well as ICIs, are eligible for importing nonroad engines into the United States under the provisions of this section, unless otherwise specified.

(b) Notwithstanding other requirements of this subpart, a nonroad engine entitled to one of the temporary exemptions of this paragraph may be conditionally admitted into the United States if prior written approval for the conditional admission is obtained from the Administrator. Conditional admission is to be under bond. The Administrator may request that the U.S. Customs Service require a specific bond amount to ensure compliance with the requirements of the Act and this subpart. A written request for approval from the Administrator is to contain the identification required in § 89.604(a) (except for § 89.604(a)(5)) and information that demonstrates that the importer is entitled to the exemption. Noncompliance with provisions of this section may result in the forfeiture of the total amount of the bond or exportation of the nonroad engine. The following temporary exemptions are permitted by this paragraph:

(1) *Exemption for repairs or alterations.* A person may conditionally import under bond a nonconforming engine solely for purpose of repairs or alterations. The engine may not be operated in the United States other than for the sole purpose of repair or alteration or shipment to the point of repair or alteration and to the port of export. It

may not be sold or leased in the United States and is to be exported upon completion of the repairs or alterations.

(2) *Testing exemption.* A test nonroad engine may be conditionally imported by a person subject to the requirements of § 89.905. A test nonroad engine may be operated in the United States provided that the operation is an integral part of the test. This exemption is limited to a period not exceeding one year from the date of importation unless a request is made by the appropriate importer concerning the nonroad engine in accordance with § 89.905(f) for a subsequent one-year period.

(3) *Precertification exemption.* A prototype nonroad engine for use in applying to EPA for certification pursuant to this subpart may be conditionally imported subject to applicable provisions of § 89.906 and the following requirements:

(i) No more than one prototype nonroad engine for each engine family for which an importer is seeking certification is to be imported.

(ii) The granting of precertification exemptions by the Administrator is discretionary. Normally, no more than three outstanding precertification exemptions are allowed for each importer. No precertification exemption is allowed if the importer requesting the exemption is in noncompliance with any requirement of this subpart until the noncompliance is corrected.

(iii) Unless a certificate of conformity is issued for the prototype nonroad engine and the nonroad engine is finally admitted pursuant to the requirements of § 89.605 within 180 days from the date of entry, the total amount of the bond is to be forfeited or the nonroad engine exported unless an extension is granted by the Administrator. A request for an extension is to be in writing and received by the Administrator prior to the date that the precertification exemption expires.

(iv) Such precertification nonroad engine may not be operated in the United States other than for the sole purpose of the precertification exemption.

(4) *Display exemptions.* (i) A nonroad engine intended solely for display may be conditionally imported subject to the requirements of § 89.907.

(ii) A display nonroad engine may be imported by any person for purposes related to a business or the public interest. Such purposes do not include collections normally inaccessible or unavailable to the public on a daily basis, display of a nonroad engine at a dealership, private use, or other purpose that the Administrator determines is not appropriate for display exemptions. A display nonroad engine may not be sold in the United States and may not be operated in the United States except for the operation incident and necessary to the display purpose.

(iii) A temporary display exemption is granted for 12 months or for the duration of the display purpose, whichever is shorter. Two extensions of up to 12 months each are available upon approval by the Administrator. In no circumstances, however, may the total period of exemption exceed 36 months. The U.S. Customs Service bonds a temporary display exemption.

(c) Notwithstanding any other requirement of this subpart, a nonroad engine may be finally admitted into the United States under this paragraph if prior written approval for such final admission is obtained from the Administrator. Conditional admission of these nonroad engines under this subpart is not permitted for the purpose of obtaining such written approval from the Administrator. A request for approval is to contain the identification information required in § 89.604(a) (except for § 89.604(a)(5)) and information that demonstrates that the importer is entitled to the exemption or exclusion. The following exemptions or exclusions are permitted by this paragraph:

(1) *National security exemption.* A nonroad engine may be imported under the national security exemption found at § 89.908.

(2) *Hardship exemption.* The Administrator may exempt on a case-by-case basis a nonroad engine from federal emission requirements to accommodate unforeseen cases of extreme hardship or extraordinary circumstances.

(3) *Exemption for nonroad engines identical to United States certified versions.* (i)

A person (including businesses) is eligible for importing a nonroad engine into the United States under the provisions of this paragraph. An exemption will be granted if the nonroad engine:

(A) is owned by the importer;

(B) is not offered for importation for the purpose of resale; and

(C) is proven to be identical, in all material respects, to a nonroad engine certified by the Original Engine Manufacturer (OEM) for sale in the United States or is proven to have been modified to be identical, in all material respects, to a nonroad engine certified by the OEM for sale in the United States according to complete written instructions provided by the OEM's United States representative, or his/her designee.

(ii) *Proof of conformity.* (A) Documentation submitted pursuant to this section for the purpose of proving conformity of individual nonroad engines is to contain sufficiently organized data or evidence demonstrating that the nonroad engine identified pursuant to § 89.604(a) is identical, in all material respects, to a nonroad engine identified in an OEM's application for certification.

(B) If the documentation does not contain all the information required by this part, or is not sufficiently organized, EPA notifies the importer of any areas of inadequacy, and that the documentation does not receive further consideration until the required information or organization is provided.

(C) If EPA determines that the documentation does not clearly or sufficiently demonstrate that a nonroad engine is eligible for importation, EPA notifies the importer in writing.

(D) If EPA determines that the documentation clearly and sufficiently demonstrates that a nonroad engine is eligible for importation, EPA grants approval for importation and notifies the importer in writing. Notwithstanding any other requirement of this subpart, the notice constitutes approval for final admission into the United States.

(d) Foreign diplomatic and military personnel may import a nonconforming nonroad engine without bond. At the time of admission, the importer must submit to the Administrator the written report required in § 89.604(a) (except for information required by § 89.604(a)(5)) and a statement from the U.S. Department of State confirming qualification for this exemption. The nonroad engine may not be sold in the United States and must be exported if the individual's diplomatic status is no longer applicable, as determined by the Department of State, unless subsequently brought into conformity in accordance with §§ 89.605, 89.609, or 89.611(c)(3).

(e) *Competition exclusion.* A nonconforming engine may be imported by any person provided the importer demonstrates to the Administrator that the engine is used to propel a vehicle used solely for competition and obtains prior written approval from the Administrator. A nonconforming engine imported pursuant to this paragraph may not be operated in the United States except for that operation incident and necessary for the competition purpose, unless subsequently brought into conformity with United States emission requirements in accordance with §§ 89.605, 89.609, or 89.611(c)(3).

(f) *Exclusions/exemptions based on date of original manufacture.* (1) Notwithstanding any other requirements of this subpart, the following nonroad engines are excluded, as determined by the engine's gross power output, from the requirements of the Act in accordance with section 213 of the Act and may be imported by any person:

(i) All nonroad engines greater than or equal to 37 kW but less than 75 kW originally manufactured prior to January 1, 1998.

(ii) All nonroad engines greater than or equal to 75 kW but less than 130 kW originally manufactured prior to January 1, 1997.

(iii) All nonroad engines greater than or equal to 130 kW but less than or equal to 560 kW originally manufactured prior to January 1, 1996.

(iv) All nonroad engines greater than 560 kW originally manufactured prior to January 1, 2000.

(v) All nonroad engines greater than or equal to 19 kW but less than 37 kW originally manufactured prior to January 1, 1999.

(vi) All nonroad engines less than 19 kW originally manufactured prior to January 1, 2000.

(2) Notwithstanding other requirements of this subpart, a nonroad engine not subject to an exclusion under § 89.611(f)(1) but greater than 20 original production (OP) years old is entitled to an exemption from the requirements of the Act, provided that it has not been modified in those 20 OP years and it is imported into the United States by an ICI. At the time of admission, the ICI must submit to the Administrator the written report required in § 89.604(a) (except for information required by § 89.604(a)(5)).

(g) An application for exemption and exclusion provided for in paragraphs (b), (c), and (e) of this section is to be mailed to: U.S. Environmental Protection Agency, Office of Mobile Sources, Engine Programs and Compliance Division (6405–J), 1200 Pennsylvania Ave., NW., Washington, DC 20460, Attention: Imports.

[59 FR 31335, June 17, 1994. Redesignated and amended at 63 FR 56996, 57022, Oct. 23, 1998; 70 FR 40446, July 13, 2005; 72 FR 53129, Sept. 18, 2007]

§ 89.612 Prohibited acts; penalties.

(a) The importation of a nonroad engine, including a nonroad engine incorporated into a nonroad vehicle or nonroad equipment, which is not covered by a certificate of conformity other than in accordance with this subpart and the entry regulations of the U.S. Customs Service is prohibited. Failure to comply with this section is a violation of section 213(d) and section 203 of the Act.

(b) Unless otherwise permitted by this subpart, during a period of conditional admission, the importer of a nonroad engine may not:

(1) Register, license, or operate the nonroad engine in the United States;

(2) Sell or offer the nonroad engine for sale;

(3) Store the nonroad engine on the premises of a dealer (unless approved by the Administrator), owner, or purchaser;

(4) Relinquish control of the nonroad engine to the owner or purchaser; or

(5) Cause a nonroad engine to be altered in any manner subsequent to modification and testing, if applicable, for which an application for final admission is based and submitted to the Administrator, unless approved in advance by the Administrator.

(c) A nonroad engine conditionally admitted pursuant to § 89.604 and not granted final admission within 120 days of such conditional admission, or within such additional time as the Administrator and the U.S. Customs Service may allow, is deemed to be unlawfully imported into the United States in violation of section 213(d) and section 203 of the Act, unless the nonroad engine has been delivered to the U.S. Customs Service for export or other disposition under applicable Customs laws and regulations. A nonroad engine not so delivered is subject to seizure by the U.S. Customs Service.

(d) An importer who violates section 213(d) and section 203 of the Act is subject to the provisions of section 209 of the Act and is also subject to a civil penalty under section 205 of the Act of not more than $32,500 for each nonroad engine subject to the violation.

In addition to the penalty provided in the Act, where applicable, a person or entity who imports an engine under the exemption provisions of § 89.611(b) and, who fails to deliver the nonroad engine to the U.S. Customs Service is liable for liquidated damages in the amount of the bond required by applicable Customs laws and regulations. The maximum penalty value listed in this paragraph (d) is shown for calendar year 2004. Maximum penalty limits for later years may be adjusted based on the Consumer Price Index. The specific regulatory provisions for changing the maximum penalties, published in 40 CFR part 19, reference the applicable U.S. Code citation on which the prohibited action is based.

(e)(1) An ICI whose nonroad engines imported under § 89.605 or § 89.609 fail to conform to federal emission requirements after modification and/or testing or who fails to comply with applicable provisions of this subpart, may, in addition to any other applicable sanctions and penalties, be subject to any, or all, of the following sanctions:

(i) The ICI's currently held certificates of conformity may be revoked or suspended;

(ii) The ICI may be deemed ineligible to apply for new certificates of conformity for up to three years; and

(iii) The ICI may be deemed ineligible to import nonroad engines under § 89.609 in the future and be placed on a list of ICIs ineligible to import nonroad engines under the provisions of § 89.609.

(2) Grounds for the actions described in paragraph (e)(1) of this section include, but are not limited to, the following:

(i) Action or inaction by the ICI or the laboratory performing the emission test on behalf of the ICI, which results in fraudulent, deceitful, or grossly inaccurate representation of any fact or condition which affects a nonroad engine's eligibility for admission to the United States under this subpart;

(ii) Failure of a significant number of imported nonroad engines to comply with federal emission requirements upon EPA inspection or retest; or

(iii) Failure by an ICI to comply with requirements of this subpart.

(3) The following procedures govern any decision to suspend, revoke, or refuse to issue certificates of conformity under this subpart:

(i) When grounds appear to exist for the actions described in paragraph (e)(1) of this section, the Administrator must notify the ICI in writing of any intended suspension or revocation of a certificate of conformity, proposed ineligibility to apply for new certificates of conformity, or intended suspension of eligibility to conduct modification/testing under § 89.609, and the grounds for such action.

(ii) Except as provided by paragraph (e)(3)(iv), the ICI must take the following actions before the Administrator will consider withdrawing notice of intent to suspend or revoke the ICI's certificate of conformity or to deem the ICI ineligible to apply for new certification or to deem the ICI ineligible to perform modification/testing under § 89.609:

(A) Submit a written report to the Administrator which identifies the reason for the noncompliance of the nonroad engine, describes the proposed remedy, including a description of any proposed quality control and/or quality assurance measures to be taken by the ICI to prevent the future occurrence of the problem, and states the date on which the remedies are to be implemented or

(B) Demonstrate that the nonroad engine does in fact comply with applicable regulations in this chapter by retesting, if applicable, the nonroad engine in accordance with the applicable emission test specified in subpart E of this part.

(iii) An ICI may request, within 15 calendar days of the Administrator's notice of intent to suspend or revoke the ICI's certificate of conformity or to deem the ICI ineligible to apply for new certificates or to deem the ICI ineligible to perform modification/testing under § 89.609, that the Administrator grant such ICI a hearing:

(A) As to whether the tests, if applicable, have been properly conducted,

(B) As to any substantial factual issue raised by the Administrator's proposed action.

(iv) If, after the Administrator notifies an ICI of the intent to suspend or revoke the ICI's certificate of conformity or to deem the ICI ineligible to apply for new certificates or to deem the ICI ineligible to perform modification/testing under § 89.609 and prior to any final suspension or revocation, the ICI demonstrates to the Administrator's satisfaction that the decision to initiate suspension or revocation of the certificate of conformity or eligibility to perform modification/testing under § 89.609 was based on erroneous information, the Administrator will withdraw the notice of intent.

(4) Hearings on suspensions and revocations of certificates of conformity or of eligibility to apply for new certificates or of eligibility to perform modification/testing under § 89.609 will be held in accordance with the following:

(i) The procedures prescribed by this section will apply whenever an ICI requests a hearing pursuant to paragraph (e)(3)(iii) of this section.

(ii) Hearings under paragraph (e)(3)(iii) will be held in accordance with the procedures outlined in § 86.614 of this chapter, where applicable, provided that where § 86.612 is referred to in § 86.614: § 86.612(a) is replaced by § 89.612(e)(2); and § 86.612(i) is replaced by § 89.612(e)(3)(iii).

(5) When a hearing is requested under this section and it clearly appears from the data or other information contained in the request for a hearing, or submitted at the hearing, that no genuine and substantial question of fact exists with respect to the issue of whether the ICI failed to comply with this subpart, the Administrator will enter an order denying the request for a hearing, or terminating the hearing, and suspending or revoking the certificate of conformity and/or deeming the ICI ineligible to apply for new certificates or to perform modification/testing under § 89.609.

(6) In lieu of requesting a hearing under paragraph (e)(3)(iii) of this section, an ICI may respond in writing to EPA's charges in the notice of intent to suspend or revoke. An ICI's written response must be received by EPA within 30 days of the date of EPA's notice of intent. No final decision to suspend or revoke will be made before that time.

[59 FR 31335, June 17, 1994. Redesignated at 63 FR 56996, Oct. 23, 1998, as amended at 70 FR 40446, July 13, 2005]

§ 89.613 Treatment of confidential information.

The provisions for treatment of confidential information as described in § 89.7 apply.

[59 FR 31335, June 17, 1994. Redesignated at 63 FR 56996, Oct. 23, 1998]

Subpart H—Recall Regulations

§ 89.701 Applicability.

The requirements of subpart H are applicable to all nonroad engines subject to the provisions of subpart A of part 89.

§ 89.702 Definitions.

The definitions in subpart A of this part apply to this subpart.

§ 89.703 Applicability of part 85, subpart S.

(a) Nonroad engines subject to provisions of subpart B of this part are subject to recall regulations specified in part 85, subpart S of this title, except for the items set forth in this section.

(b) Reference to section 214 of the Clean Air Act in § 85.1801 is replaced by reference to section 216 of the Clean Air Act.

(c) Reference to section 202 of the Act in § 85.1802(a) is replaced by reference to section 213 of the Act.

(d) Reference to ''family particulate emission limits as defined in Part 86 promulgated under section 202 of the Act'' in § 85.1803(a) and § 85.1805(a)(1) is replaced by reference to family emission limits as defined in part 89 promulgated under section 213 of the Act.

(e) Reference to ''vehicles or engines'' throughout the subpart is replaced by reference to ''engines.''

Subpart I—Emission Defect Reporting Requirements

§ 89.801 Applicability.

The requirements of subpart I are applicable to all nonroad engines subject to the provisions of subpart A of part 89. The requirement to report emission-related defects affecting a given class or category of engines remains applicable for five years from the end of the model year in which such engines were manufactured.

§ 89.802 Definitions.

The definitions in subpart A of this part apply to this subpart.

§ 89.803 Applicability of part 85, subpart T.

(a) Nonroad engines subject to provisions of subpart B of this part are subject to emission defect reporting requirements specified in part 85, subpart T of this chapter, except for the items set forth in this section.

(b) Section 85.1901 is replaced by § 89.801.

(c) Reference to the Clean Air Act, 42 U.S.C. 1857 in § 85.1902(a) is replaced by reference to the Clean Air Act, 42 U.S.C. 7401.

(d) Reference to the ''approved Application for Certification required by 40 CFR 86.077–22 and like provisions of Part 85 and Part 86 of Title 40 of the Code of Federal Regulations'' in § 85.1902(b) is replaced by reference to the approved application for certification required by § 89.115 and like provisions of part 89 of this chapter.

(e) Reference to section 202(d) of the Act in § 85.1902(c) is replaced by reference to section 202(d) and section 213 of the Act.

(f) Reference to section 214 of the Act in § 85.1902 (e) and (f) is replaced by reference to section 216 of the Act.

(g) Reference to ''vehicles or engines'' throughout the subpart is replaced by reference to ''engines.''

Subpart J—Exemption Provisions

§ 89.901 Applicability.

The requirements of subpart J are applicable to all nonroad engines subject to the provisions of subpart A of part 89.

§ 89.902 Definitions.

The definitions in subpart A of this part apply to this subpart. The following definitions also apply to this subpart.

Exemption means exemption from the prohibitions of § 89.1006.

Export exemption means an exemption granted under § 89.1004(b) for the purpose of exporting new nonroad engines.

National security exemption means an exemption which may be granted under § 89.1004(b) for the purpose of national security.

Manufacturer-owned nonroad engine means an uncertified nonroad engine owned and controlled by a nonroad engine manufacturer and used in a manner not involving lease or sale by itself or in a vehicle or piece of equipment employed from year to year in the ordinary course of business for product development, production method assessment, and market promotion purposes.

Testing exemption means an exemption which may be granted under § 89.1004(b) for the purpose of research investigations, studies, demonstrations or training, but not including national security.

§ 89.903 Application of section 216(10) of the Act.

(a) For the purpose of determining the applicability of section 216(10) of the Act, an internal combustion engine (including the fuel system) that is not used in a motor vehicle is deemed a nonroad engine if it meets the definition in subpart A of this part.

(b) EPA will maintain a list of nonroad engines that have been determined to be excluded because they are used solely for competition. This list will be available to the public and may be obtained by writing to the following address: Chief, Selective Enforcement Auditing Section, Engine Programs and Compliance Division (6405–J), Environmental Protection Agency, 1200 Pennsylvania Ave., NW., Washington, DC 20460.

(c) Upon written request, EPA will make written determinations as to whether certain engines are or are not nonroad engines. Engines that are determined not to be nonroad engines are excluded from regulations under this part.

[59 FR 31335, June 17, 1994, as amended at 63 FR 57022, Oct. 23, 1998]

§ 89.904 Who may request an exemption.

(a) Any person may request a testing exemption under § 89.905.

(b) Any nonroad engine manufacturer may request a national security exemption under § 89.908.

(c) For nonroad engine manufacturers, nonroad engines manufactured for export purposes are exempt without application, subject to the provisions of § 89.909.

(d) For eligible manufacturers, as determined by § 89.906, manufacturer-owned nonroad engines are exempt without application, subject to the provisions of § 89.906.

(e) For any person, display nonroad engines are exempt without application, subject to the provisions of § 89.907.

§ 89.905 Testing exemption.

(a) Any person requesting a testing exemption must demonstrate the following:

(1) That the proposed test program has a purpose which constitutes an appropriate basis for an exemption in accordance with this section;

(2) That the proposed test program necessitates the granting of an exemption;

(3) That the proposed test program exhibits reasonableness in scope; and

(4) That the proposed test program exhibits a degree of control consonant

with the purpose of the test program and EPA's monitoring requirements.

(5) Paragraphs (b), (c), (d), and (e) of this section describe what constitutes a sufficient demonstration for each of the four identified elements.

(b) With respect to the purpose of the proposed test program, an appropriate purpose would be research, investigations, studies, demonstrations, or training, but not national security. A concise statement of purpose is a required item of information.

(c) With respect to the necessity that an exemption be granted, necessity arises from an inability to achieve the stated purpose in a practicable manner without performing or causing to be performed one or more of the prohibited acts under § 89.1003. In appropriate circumstances, time constraints may be a sufficient basis for necessity, but the cost of certification alone, in the absence of extraordinary circumstances, is not a basis for necessity.

(d) With respect to reasonableness, a test program must exhibit a duration of reasonable length and affect a reasonable number of engines. In this regard, required items of information include:

(1) An estimate of the program's duration, and

(2) The maximum number of nonroad engines involved.

(e) With respect to control, the test program must incorporate procedures consistent with the purpose of the test and be capable of affording EPA monitoring capability. As a minimum, required items of information include:

(1) The technical nature of the test;

(2) The site of the test;

(3) The time or mileage duration of the test;

(4) The ownership arrangement with regard to the engines involved in the test;

(5) The intended final disposition of the engines;

(6) The manner in which the engine identification numbers will be identified, recorded, and made available; and

(7) The means or procedure whereby test results will be recorded.

(f) A manufacturer of new nonroad engines may request a testing exemption to cover nonroad engines intended for use in test programs planned or anticipated over the course of a subsequent one-year period. Unless otherwise required by the Director, Engine Programs and Compliance Division, a manufacturer requesting such an exemption need only furnish the information required by paragraphs (a)(1) and (d)(2) of this section along with a description of the record-keeping and control procedures that will be employed to assure that the engines are used for purposes consistent with paragraph (a) of this section.

[59 FR 31335, June 17, 1994, as amended at 63 FR 57022, Oct. 23, 1998]

§ 89.906 Manufacturer-owned exemption and precertification exemption.

(a) Except as provided in paragraph (b) of this section, any manufacturer-owned nonroad engine, as defined by § 89.902, is exempt from § 89.1003, without application, if the manufacturer complies with the following terms and conditions:

(1) The manufacturer must establish, maintain, and retain the following adequately organized and indexed information on each exempted engine:

(i) Engine identification number,

(ii) Use of the engine on exempt status and

(iii) Final disposition of any engine removed from exempt status; and

(2) The manufacturer must provide right of entry and access to these records to EPA authorized representatives as outlined in § 89.506.

(3) Unless the requirement is waived or an alternate procedure is approved by the Director, Engine Programs and Compliance Division, the manufacturer must permanently affix a label to each nonroad engine on exempt status. This label should:

(i) Be affixed in a readily visible portion of the engine,

(ii) Be attached in such a manner that cannot be removed without destruction or defacement,

(iii) State in the English language and in block letters and numerals of a color that contrasts with the background of the label, the following information:

(A) The label heading ''Emission Control Information;''

(B) Full corporate name and trademark of manufacturer;

(C) Engine displacement, engine family identification, and model year of engine; or person of office to be contacted for further information about the engine;

(D) The statement ''This nonroad engine is exempt from the prohibitions of 40 CFR 89.1003.''

(4) No provision of paragraph (a)(3) of this section prevents a manufacturer from including any other information it desires on the label.

(b) Any independent commercial importer that desires a precertification exemption pursuant to § 89.611(b)(3) and is in the business of importing, modifying, or testing uncertified nonroad engines for resale under the provisions of subpart G of this part, must apply to the Director, Engine Programs and Compliance Division. The Director may require such independent commercial importer to submit information regarding the general nature of the fleet activities, the number of nonroad engines involved, and a demonstration that adequate record-keeping procedures for control purposes will be employed.

[59 FR 31335, June 17, 1994, as amended at 63 FR 57022, Oct. 23, 1998]

§ 89.907 Display exemption.

Where an uncertified nonroad engine is a display engine to be used solely for display purposes, will only be operated incident and necessary to the display purpose, and will not be sold unless an applicable certificate of conformity has been received or the engine has been finally admitted pursuant to subpart G of this part, no request for exemption of the engine is necessary.

§ 89.908 National security exemption.

(a)(1) Any nonroad engine, otherwise subject to this part, which is used in a vehicle that exhibits substantial features ordinarily associated with military combat such as armor and/or permanently affixed weaponry and which will be owned and/or used by an agency of the federal government with responsibility for national defense, will be considered exempt from these regulations for purposes of national security. No request for exemption is necessary.

(2) Manufacturers may request a national security exemption for any nonroad engine, otherwise subject to this part, which does not meet the conditions described in paragraph (a)(1) of this section. A manufacturer requesting a national security exemption must state the purpose for which the exemption is required and the request must be endorsed by an agency of the federal government charged with responsibility for national defense.

(b) EPA will maintain a list of models of nonroad engines (and the vehicles which use them) that have been granted a national security exemption under paragraph (a)(2) of this section. This list will be available to the public and may be obtained by writing to the following address: Group Manager, Engine Compliance Programs Group, Engine Programs and Compliance Division (6403J) Environmental Protection Agency, 1200 Pennsylvania Ave., NW., Washington, DC 20460.

(c) Manufacturers must add a legible label, written in block letters in English, to each engine exempted under this section. The label must be permanently secured to a readily visible part of the engine needed for normal operation and not normally requiring replacement, such as the engine block. This label must include at least the following items:

(1) The label heading ''EMISSION CONTROL INFORMATION''.

(2) Your corporate name and trademark.

(3) Engine displacement, engine family identification (as applicable), and model year of the engine or whom to contact for further information.

(4) The statement ''THIS ENGINE HAS AN EXEMPTION FOR NATIONAL SECURITY UNDER 40 CFR 89.908.''.

[61 FR 52102, Oct. 4, 1996, as amended at 69 FR 39213, June 29, 2004]

§ 89.909 Export exemptions.

(a) A new nonroad engine intended solely for export, and so labeled or tagged on the outside of the container and on the engine itself, is subject to the provisions of § 89.1003, unless the importing country has new nonroad engine emission standards which differ from EPA standards.

(b) For the purpose of paragraph (a) of this section, a country having no standards, whatsoever, is deemed to be a country having emission standards which differ from EPA standards.

(c) EPA will maintain a list of foreign countries that have in force nonroad emission standards identical to EPA standards and have so notified EPA. This list may be obtained by writing to the following address: Chief, Selective Enforcement Auditing Section, Manufacturers Operations Division (6405–J), Environmental Protection Agency, 1200 Pennsylvania Ave., NW., Washington, DC 20460. New nonroad engines exported to such countries must comply with EPA certification regulations.

(d) It is a condition of any exemption for the purpose of export under paragraph (a) of this section, that such exemption is void ab initio with respect to a new nonroad engine intended solely for export, where such nonroad engine is sold, or offered for sale, to an ultimate purchaser or otherwise distributed or introduced into commerce in the United States for purposes other than export.

§ 89.910 Granting of exemptions.

(a) If upon completion of the review of an exemption request made pursuant to § 89.905 or § 89.908, EPA determines it is appropriate to grant such an exemption, a memorandum of exemption is to be prepared and submitted to the person requesting the exemption. The memorandum is to set forth the basis for the exemption, its scope, and such terms and conditions as are deemed necessary. Such terms and conditions generally include, but are not limited to, agreements by the applicant to conduct the exempt activity in the manner described to EPA, create and maintain adequate records accessible to EPA at reasonable times, employ labels for the exempt engines setting forth the nature of the exemption, take appropriate measures to assure that the terms of the exemption are met, and advise EPA of the termination of the activity and the ultimate disposition of the engines.

(b) Any exemption granted pursuant to paragraph (a) of this section is deemed to cover any subject engine only to the extent that the specified terms and conditions are complied with. A breach of any term or condition causes the exemption to be void ab initio with respect to any engine. Consequently, the causing or the performing of an act prohibited under § 89.1003(a)(1) or (a)(3), other than in strict conformity with all terms and conditions of this exemption, renders the person to whom the exemption is granted, and any other person to whom the provisions of § 89.1003(a) are applicable, liable to suit under sections 204 and 205 of the Act.

(c) Manufacturers may ask EPA to apply the provisions of 40 CFR 1068.201(i) to engines exempted or excluded under this subpart.

[59 FR 31335, June 17, 1994, as amended at 69 FR 39213, June 29, 2004]

§ 89.911 Submission of exemption requests.

Requests for exemption or further information concerning exemptions and/or the exemption request review procedure should be addressed to: Chief, Selective Enforcement Auditing Section, Engine Programs and Compliance Division (6405–J), Environmental Protection Agency, 1200 Pennsylvania Ave., NW., Washington, DC 20460.

[63 FR 57022, Oct. 23, 1998]

§ 89.912 Treatment of confidential information.

The provisions for treatment of confidential information as described in § 89.7 apply.

§ 89.913 What provisions apply to engines certified under the motor-vehicle program?

You may use the provisions of 40 CFR 1039.605 to introduce new nonroad engines into commerce if they are already certified to the requirements that apply to compression-ignition engines under 40 CFR parts 85 and 86. However, when using the provisions of 40 CFR 1039.605, references to this part 89 or sections in this part shall be used instead of references to 40 CFR part 1039 or sections in that part.

[70 FR 40447, July 13, 2005]

§ 89.914 What provisions apply to vehicles certified under the motor-vehicle program?

You may use the provisions of 40 CFR 1039.610 to introduce new nonroad engines or equipment into commerce if the vehicle is already certified to the requirements that apply under 40 CFR parts 85 and 86. However, when using the provisions of 40 CFR 1039.610, references to this part 89 or sections in this part shall be used instead of references to 40 CFR part 1039 or sections in that part.

[70 FR 40447, July 13, 2005]

§ 89.915 Staged-assembly exemption.

You may ask us to provide a temporary exemption to allow you to complete production of your engines at different facilities, as long as you maintain control of the engines until they are in their certified configuration. We may require you to take specific steps to ensure that such engines are in their certified configuration before reaching the ultimate purchaser. You may request an exemption under this section in your application for certification, or in a separate submission.

[70 FR 40447, July 13, 2005]

§ 89.916 Emergency-vessel exemption for marine engines below 37 kW.

The prohibitions in § 89.1003(a)(1) do not apply to new marine engines used in lifeboats and rescue boats as described in 40 CFR 94.914.

[73 FR 37194, June 30, 2008]

Subpart K—General Enforcement Provisions and Prohibited Acts

§ 89.1001 Applicability.

The requirements of subpart K are applicable to all nonroad engines subject to the provisions of subpart A of part 89, and to all nonroad vehicles and equipment that contain such nonroad engines.

§ 89.1002 Definitions.

The definitions in subpart A of this part apply to this subpart.

§ 89.1003 Prohibited acts.

(a) The following acts and the causing thereof are prohibited:

(1)(i) In the case of a manufacturer of new nonroad engines, vehicles, or equipment for distribution in commerce, the sale, or the offering for sale, or the introduction, or delivery for introduction, into commerce, of any new nonroad engine manufactured after the applicable effective date under this part, or any nonroad vehicle or equipment containing such engine, unless such engine is covered by a certificate of conformity issued (and in effect) under regulations found in this part.

(ii) In the case of any person, except as provided in subpart G of this part, the importation into the United States of any new nonroad engine manufactured after the applicable effective date under this part, or any nonroad vehicle or equipment containing such engine, unless such engine is covered by a certificate of conformity issued (and in effect) under regulations found in this part.

(2)(i) For a person to fail or refuse to permit access to or copying of records or to fail to make reports or provide information required under § 89.1004.

(ii) For a person to fail or refuse to permit entry, testing, or inspection authorized under §§ 89.129, 89.506 or 89.1004.

(iii) For a person to fail or refuse to perform tests, or to have tests performed as required under §§ 89.119 or 89.1004.

(iv) For a person to fail to establish or maintain records as required under § 89.1004.

(3)(i) For a person to remove or render inoperative a device or element of design installed on or in a nonroad engine, vehicle or equipment in compliance with regulations under this part prior to its sale and delivery to the ultimate purchaser, or for a person knowingly to remove or render inoperative such a device or element of design after the sale and delivery to the ultimate purchaser; or

(ii) For a person to manufacture, sell or offer to sell, or install, a part or component intended for use with, or as part of, a nonroad engine, vehicle or equipment, where a principal effect of the part or component is to bypass, defeat, or render inoperative a device or

element of design installed on or in a nonroad engine in compliance with regulations issued under this part, and where the person knows or should know that the part or component is being offered for sale or installed for this use or put to such use; or

(iii) For a person to deviate from the provisions of § 89.130 when rebuilding an engine (or rebuilding a portion of an engine or engine system). Such a deviation violates paragraph (a)(3)(i) of this section.

(4) For a manufacturer of a new nonroad engine subject to standards prescribed under this part:

(i) To sell, offer for sale, or introduce or deliver into commerce, a nonroad engine unless the manufacturer has complied with the requirements of § 89.1007.

(ii) To sell, offer for sale, or introduce or deliver into commerce, a nonroad engine unless a label or tag is affixed to the engine in accordance with § 89.110.

(iii) To fail or refuse to comply with the requirements of § 89.1008.

(iv) Except as provided in § 89.109, to provide directly or indirectly in any communication to the ultimate purchaser or a subsequent purchaser that the coverage of a warranty under the Act is conditioned upon use of a part, component, or system manufactured by the manufacturer or a person acting for the manufacturer or under its control, or conditioned upon service performed by such persons.

(v) To fail or refuse to comply with the terms and conditions of the warranty under § 89.1007.

(5) For a person to circumvent or attempt to circumvent the residence time requirements of paragraph (2)(iii) of the nonroad engine definition in § 89.2.

(6) For a manufacturer of nonroad vehicles or equipment to distribute in commerce, sell, offer for sale, or introduce into commerce a nonroad vehicle or piece of equipment which contains an engine not covered by a certificate of conformity, except as otherwise allowed by this part.

(b) For the purposes of enforcement of this part, the following apply:

(1) Nothing in paragraph (a)(3) of this section is to be construed to require the use of manufacturer parts in maintaining or repairing a nonroad engine.

(2) Actions for the purpose of repair or replacement of a device or element of design or any other item are not considered prohibited acts under § 89.1003(a) if the action is a necessary and temporary procedure, the device or element is replaced upon completion of the procedure, and the action results in the proper functioning of the device or element of design.

(3) Actions for the purpose of a conversion of a nonroad engine for use of a clean alternative fuel (as defined in Title II of the Act) are not considered prohibited acts under § 89.1003(a) if:

(i) the vehicle complies with the applicable standard when operating on the alternative fuel, and the device or element is replaced upon completion of the conversion procedure, and

(ii) in the case of engines converted to dual fuel or flexible use, the action results in proper functioning of the device or element when the nonroad engine operates on conventional fuel.

(4) Certified nonroad engines shall be used in all vehicles and equipment manufactured on or after the applicable model years in § 89.112 that are self-propelled, portable, transportable, or are intended to be propelled while performing their function, unless the manufacturer of the vehicle or equipment can prove that the vehicle or equipment will be used in a manner consistent with paragraph (2) of the definition of nonroad engine in § 89.2. After the date on which a new standard takes effect, nonroad vehicle and equipment manufacturers may continue to use nonroad engines built prior to this date that are not certified to the standard until inventories of those engines are depleted; however, stockpiling of such nonroad engines will be considered a violation of this section.

(5)–(6) [Reserved]

(7) A new nonroad engine intended solely to replace a nonroad engine in a piece of nonroad equipment, where the engine requiring replacement is not certified or is certified to emission standards that are less stringent than those in effect when the replacement engine is built, shall not be subject to the prohibitions of paragraph (a)(1) of this section or to the requirements of

§ 89.105 and paragraph (b)(4) of this section, provided that:

(i) The engine manufacturer has ascertained that no engine produced by itself or by the manufacturer of the engine that is being replaced, if different, and certified to the requirements of this subpart, is available with the appropriate physical or performance characteristics to repower the equipment; and

(ii) The engine manufacturer or its agent takes ownership and possession of the engine being replaced or confirms that the engine has been destroyed; and

(iii) If the engine being replaced was not subject to any emission standards under this part, the replacement engine must have a permanent label with your corporate name and trademark and the following language, or similar alternate language approved by the Administrator: THIS ENGINE DOES NOT COMPLY WITH FEDERAL NONROAD OR ON-HIGHWAY EMISSION REQUIREMENTS. SALE OR INSTALLATION OF THIS ENGINE FOR ANY PURPOSE OTHER THAN AS A REPLACEMENT ENGINE FOR AN ENGINE MANUFACTURED PRIOR TO JANUARY 1 [INSERT APPROPRIATE YEAR] IS A VIOLATION OF FEDERAL LAW SUBJECT TO CIVIL PENALTY.

(iv) If the engine being replaced was subject to emission standards less stringent than those in effect when you produce the replacement engine, the replacement engine must have a permanent label with your corporate name and trademark and the following language, or similar alternate language approved by the Administrator:

THIS ENGINE COMPLIES WITH U.S. EPA NONROAD EMISSION REQUIREMENTS FOR [Identify the appropriate emission standards (by model year, tier, or emission levels) for the replaced engine] ENGINES UNDER 40 CFR 89.1003(b)(7). SELLING OR INSTALLING THIS ENGINE FOR ANY PURPOSE OTHER THAN TO REPLACE A [Identify the appropriate emission standards (by model year, tier, or emission levels) for the replaced engine] ENGINE MAY BE A VIOLATION OF FEDERAL LAW SUBJECT TO CIVIL PENALTY.

(v) If the old engine was subject to emission standards less stringent than those in effect when you produce the replacement engine, you must make the replacement engine in a configuration identical in all material respects to the old engine. You may alternatively make the replacement engine in a configuration identical in all material respects to another certified engine of the same or later model year, as long as the engine is not certified with a family emission limit higher than that of the engine being replaced.

(vi) Engines sold pursuant to the provisions of this paragraph (b)(7) will neither generate nor use emission credits and will not be part of any accounting under the averaging, banking and trading program.

(vii) In cases where an engine is to be imported for replacement purposes under the provisions of this paragraph (b)(7), the term ''engine manufacturer'' shall not apply to an individual or other entity that does not possess a current Certificate of Conformity issued by EPA under this part; and

(viii) The provisions of this section may not be used to circumvent emission standards that apply to new engines under this part.

[59 FR 31335, June 17, 1994, as amended at 61 FR 58106, Nov. 12, 1996; 63 FR 57022, Oct. 23, 1998; 70 FR 40447, July 13, 2005; 73 FR 59179, Oct. 8, 2008]

§ 89.1004 General enforcement provisions.

(a) *Information collection provisions.* (1) Every manufacturer of new nonroad engines and other persons subject to the requirements of this part must establish and maintain records, perform tests where such testing is not otherwise reasonably available under this part, make reports and provide information the Administrator may reasonably require to determine whether the manufacturer or other person has acted or is acting in compliance with this part or to otherwise carry out the provisions of this part, and must, upon request of an officer or employee duly designated by the Administrator, permit the officer or employee at reasonable times to have access to and copy such records. The manufacturer shall

comply in all respects with the requirements of subpart I of this part.

(2) For purposes of enforcement of this part, an officer or employee duly designated by the Administrator, upon presenting appropriate credentials, is authorized:

(i) To enter, at reasonable times, any establishment of the manufacturer, or of any person whom the manufacturer engaged to perform any activity required under paragraph (a) (1) of this section, for the purposes of inspecting or observing any activity conducted pursuant to paragraph (a)(1) of this section, and

(ii) To inspect records, files, papers, processes, controls, and facilities used in performing an activity required by paragraph (a)(1) of this section, by the manufacturer or by a person whom the manufacturer engaged to perform the activity.

(b) *Exemption provision*. The Administrator may exempt a new nonroad engine from § 89.1003 upon such terms and conditions as the Administrator may find necessary for the purpose of export, research, investigations, studies, demonstrations, or training, or for reasons of national security.

(c) *Importation provision*. (1) A new nonroad engine, vehicle, or equipment offered for importation or imported by a person in violation of § 89.1003 is to be refused admission into the United States, but the Secretary of the Treasury and the Administrator may, by joint regulation, provide for deferring a final determination as to admission and authorizing the delivery of such a nonroad engine offered for import to the owner or consignee thereof upon such terms and conditions (including the furnishing of a bond) as may appear to them appropriate to insure that the nonroad engine will be brought into conformity with the standards, requirements, and limitations applicable to it under this part.

(2) If a nonroad engine is finally refused admission under this paragraph, the Secretary of the Treasury shall cause disposition thereof in accordance with the customs laws unless it is exported, under regulations prescribed by the Secretary, within 90 days of the date of notice of the refusal or additional time as may be permitted pursuant to the regulations.

(3) Disposition in accordance with the customs laws may not be made in such manner as may result, directly or indirectly, in the sale, to the ultimate consumer, of a new nonroad engine that fails to comply with applicable standards of the Administrator under this part.

(d) *Export provision*. A new nonroad engine intended solely for export, and so labeled or tagged on the outside of the container and on the engine itself, shall be subject to the provisions of § 89.1003, except that if the country that is to receive the engine has emission standards that differ from the standards prescribed under subpart B of this part, then the engine must comply with the standards of the country that is to receive the engine.

§ 89.1005 Injunction proceedings for prohibited acts.

(a) The district courts of the United States have jurisdiction to restrain violations of § 89.1003(a).

(b) Actions to restrain violations of § 89.1003(a) must be brought by and in the name of the United States. In an action, subpoenas for witnesses who are required to attend a district court in any district may run into any other district.

§ 89.1006 Penalties.

(a) *Violations*. A violation of the requirements of this subpart is a violation of the applicable provisions of the Act, including sections 213(d) and 203, and is subject to the penalty provisions thereunder.

(1) A person who violates § 89.1003(a)(1), (a)(4), or (a)(6), or a manufacturer or dealer who violates § 89.1003(a)(3)(i), is subject to a civil penalty of not more than $32,500 for each violation.

(2) A person other than a manufacturer or dealer who violates § 89.1003(a)(3)(i) or any person who violates § 89.1003(a)(3)(ii) is subject to a civil penalty of not more than $2,750 for each violation.

(3) A violation with respect to § 89.1003 (a)(1), (a)(3)(i), (a)(4), or (a)(6) constitutes a separate offense with respect to each nonroad engine.

(4) A violation with respect to § 89.1003(a)(3)(ii) constitutes a separate offense with respect to each part or component. Each day of a violation with respect to § 89.1003(a)(5) constitutes a separate offense.

(5) A person who violates § 89.1003(a)(2) or (a)(5) is subject to a civil penalty of not more than $32,500 per day of violation.

(6) The maximum penalty values listed in this section are shown for calendar year 2004. Maximum penalty limits for later years may be adjusted based on the Consumer Price Index. The specific regulatory provisions for changing the maximum penalties, published in 40 CFR part 19, reference the applicable U.S. Code citation on which the prohibited action is based.

(b) *Civil actions.* The Administrator may commence a civil action to assess and recover any civil penalty under paragraph (a) of this section.

(1) An action under this paragraph may be brought in the district court of the United States for the district in which the defendant resides or has the Administrator's principal place of business, and the court has jurisdiction to assess a civil penalty.

(2) In determining the amount of a civil penalty to be assessed under this paragraph, the court is to take into account the gravity of the violation, the economic benefit or savings (if any) resulting from the violation, the size of the violator's business, the violator's history of compliance with Title II of the Act, action taken to remedy the violation, the effect of the penalty on the violator's ability to continue in business, and such other matters as justice may require.

(3) In any such action, subpoenas for witnesses who are required to attend a district court in any district may run into any other district.

(c) *Administrative assessment of certain penalties*—(1) Administrative penalty authority. In lieu of commencing a civil action under paragraph (b) of this section, the Administrator may assess any civil penalty prescribed in paragraph (a) of this section, except that the maximum amount of penalty sought against each violator in a penalty assessment proceeding shall not exceed $270,000, unless the Administrator and the Attorney General jointly determine that a matter involving a larger penalty amount is appropriate for administrative penalty assessment. Any such determination by the Administrator and the Attorney General is not subject to judicial review. Assessment of a civil penalty shall be by an order made on the record after opportunity for a hearing held in accordance with the procedures found at part 22 of this chapter. The Administrator may compromise, or remit, with or without conditions, any administrative penalty which may be imposed under this section.

(2) *Determining amount.* In determining the amount of any civil penalty assessed under this paragraph, the Administrator shall take into account the gravity of the violation, the economic benefit or savings (if any) resulting from the violation, the size of the violator's business, the violator's history of compliance with Title II of the Act, action taken to remedy the violation, the effect of the penalty on the violator's ability to continue in business, and such other matters as justice may require.

(3) *Effect of administrator's action.* (i) Action by the Administrator under this paragraph does not affect or limit the Administrator's authority to enforce any provisions of the Act; except that any violation with respect to which the Administrator has commenced and is diligently prosecuting an action under this paragraph, or for which the Administrator has issued a final order not subject to further judicial review and for which the violator has paid a penalty assessment under this paragraph shall not be the subject of a civil penalty action under paragraph (b) of this section.

(ii) No action by the Administrator under this paragraph shall affect a person's obligation to comply with a section of this part.

(4) *Finality of order.* An order issued under this subsection is to become final 30 days after its issuance unless a petition for judicial review is filed under paragraph (c)(5) of this section.

(5) *Judicial review.* A person against whom a civil penalty is assessed in accordance with this subsection may seek review of the assessment in the

United States District Court for the District of Columbia or for the district in which the violation is alleged to have occurred, in which such person resides, or where the person's principal place of business is located, within the 30-day period beginning on the date a civil penalty order is issued. The person shall simultaneously send a copy of the filing by certified mail to the Administrator and the Attorney General. The Administrator shall file in the court within 30 days a certified copy, or certified index, as appropriate, of the record on which the order was issued. The court is not to set aside or remand any order issued in accordance with the requirements of this paragraph unless substantial evidence does not exist in the record, taken as a whole, to support the finding of a violation or unless the Administrator's assessment of the penalty constitutes an abuse of discretion, and the court is not to impose additional civil penalties unless the Administrator's assessment of the penalty constitutes an abuse of discretion. In any proceedings, the United States may seek to recover civil penalties assessed under this section.

(6) *Collection.* (i) If any person fails to pay an assessment of a civil penalty imposed by the Administrator as provided in this part after the order making the assessment has become final or after a court in an action brought under paragraph (c)(5) of this section has entered a final judgment in favor of the Administrator, the Administrator shall request that the Attorney General bring a civil action in an appropriate district court to recover the amount assessed (plus interest at rates established pursuant to section 6621(a)(2) of the Internal Revenue Code of 1986 from the date of the final order or the date of final judgment, as the case may be). In such an action, the validity, amount, and appropriateness of the penalty is not subject to review.

(ii) A person who fails to pay on a timely basis the amount of an assessment of a civil penalty as described in paragraph (c)(6)(i) of this section shall be required to pay, in addition to that amount and interest, the United States' enforcement expenses, including attorney's fees and costs for collection proceedings, and a quarterly nonpayment penalty for each quarter during which the failure to pay persists. The nonpayment penalty is an amount equal to ten percent of the aggregate amount of that person's penalties and nonpayment penalties which are unpaid as of the beginning of such quarter.

[59 FR 31335, June 17, 1994, as amended at 70 FR 40447, July 13, 2005]

§ 89.1007 Warranty provisions.

(a) The manufacturer of each nonroad engine must warrant to the ultimate purchaser and each subsequent purchaser that the engine is designed, built, and equipped so as to conform at the time of sale with applicable regulations under section 213 of the Act, and is free from defects in materials and workmanship which cause such engine to fail to conform with applicable regulations for its warranty period (as determined under § 89.104).

(b) In the case of a nonroad engine part, the manufacturer or rebuilder of the part may certify according to § 85.2112 that use of the part will not result in a failure of the engine to comply with emission standards promulgated in this part.

(c) For the purposes of this section, the owner of any nonroad engine warranted under this part is responsible for the proper maintenance of the engine. Proper maintenance includes replacement and service, at the owner's expense at a service establishment or facility of the owner's choosing, of all parts, items, or devices related to emission control (but not designed for emission control) under the terms of the last sentence of section 207(a)(3) of the Act, unless such part, item, or device is covered by any warranty not mandated by this Act.

[59 FR 31335, June 17, 1994, as amended at 63 FR 57023, Oct. 23, 1998]

§ 89.1008 In-use compliance provisions.

(a) Effective with respect to nonroad vehicles, equipment, and engines manufactured during model years 1996 and after:

(1) If the Administrator determines that a substantial number of any class

or category of engines, although properly maintained and used, do not conform to the regulations prescribed under section 213 of the Act when in actual use throughout their recall period (as defined under § 89.104(b)), the Administrator shall immediately notify the manufacturer of such nonconformity and require the manufacturer to submit a plan for remedying the nonconformity of the engines with respect to which such notification is given.

(i) The manufacturer's plan shall provide that the nonconformity of any such engines which are properly used and maintained will be remedied at the expense of the manufacturer.

(ii) If the manufacturer disagrees with such determination of nonconformity and so advises the Administrator, the Administrator shall afford the manufacturer and other interested persons an opportunity to present their views and evidence in support thereof at a public hearing. Unless, as a result of such hearing, the Administrator withdraws such determination of nonconformity, the Administrator shall, within 60 days after the completion of such hearing, order the manufacturer to provide prompt notification of such nonconformity in accordance with paragraph (a)(2) of this section. The manufacturer shall comply in all respects with the requirements of subpart G of this part.

(2) Any notification required to be given by the manufacturer under paragraph (a)(1) of this section with respect to any class or category of engines shall be given to dealers, ultimate purchasers, and subsequent purchasers (if known) in such manner and containing such information as required in subparts H and I of this part.

(3)(i) The manufacturer shall furnish with each new nonroad engine written instructions for the proper maintenance and use of the engine by the ultimate purchaser as required under § 89.109. The manufacturer shall provide in boldface type on the first page of the written maintenance instructions notice that maintenance, replacement, or repair of the emission control devices and systems may be performed by any nonroad engine repair establishment or individual using any nonroad engine part which has been certified as provided in § 89.1007(a).

(ii) The instruction under paragraph (3)(i) of this section must not include any condition on the ultimate purchaser's using, in connection with such engine, any component or service (other than a component or service provided without charge under the terms of the purchase agreement) which is identified by brand, trade, or corporate name. Subject instructions also must not directly or indirectly distinguish between service performed by the franchised dealers of such manufacturer, or any other service establishments with which such manufacturer has a commercial relationship, and service performed by independent nonroad engine repair facilities with which such manufacturer has no commercial relationship.

(iii) The prohibition of paragraph (a)(3)(ii) of this section may be waived by the Administrator if:

(A) The manufacturer satisfies the Administrator that the engine will function properly only if the component or service so identified is used in connection with such engine, and

(B) The Administrator finds that such a waiver is in the public interest.

(iv) In addition, the manufacturer shall indicate by means of a label or tag permanently affixed to the engine that the engine is covered by a certificate of conformity issued for the purpose of assuring achievement of emission standards prescribed under section 213 of the Act. This label or tag shall also contain information relating to control of emissions as prescribed under § 89.110.

(b) The manufacturer bears all cost obligation a dealer incurs as a result of a requirement imposed by paragraph (a) of this section. The transfer of any such cost obligation from a manufacturer to a dealer through franchise or other agreement is prohibited.

(c) If a manufacturer includes in an advertisement a statement respecting the cost or value of emission control devices or systems, the manufacturer shall set forth in the statement the cost or value attributed to these devices or systems by the Secretary of Labor (through the Bureau of Labor Statistics). The Secretary of Labor,

and his or her representatives, has the same access for this purpose to the books, documents, papers, and records of a manufacturer as the Comptroller General has to those of a recipient of assistance for purposes of section 311 of the Act.

(d) Any inspection of a nonroad engine for purposes of paragraph (a)(1) of this section, after its sale to the ultimate purchaser, is to be made only if the owner of such vehicle or engine voluntarily permits such inspection to be made, except as may be provided by any state or local inspection program.

§ 89.1009 What special provisions apply to branded engines?

A manufacturer identifying the name and trademark of another company on the emission control information label, as provided by § 89.110(b)(2), must comply with the provisions of 40 CFR 1039.640.

[70 FR 40448, July 13, 2005]

PART 90—CONTROL OF EMISSIONS FROM NONROAD SPARK-IGNITION ENGINES AT OR BELOW 19 KILOWATTS

Subpart A—General

Sec.
90.1 Applicability.
90.2 Effective dates.
90.3 Definitions.
90.4 Treatment of confidential information.
90.5 Acronyms and abbreviations.
90.6 Table and figure numbering; position.
90.7 Reference materials.

Subpart B—Emission Standards and Certification Provisions

90.101 Applicability.
90.102 Definitions.
90.103 Exhaust emission standards.
90.104 Compliance with emission standards.
90.105 Useful life periods for Phase 2 engines.
90.106 Certificate of conformity.
90.107 Application for certification.
90.108 Certification.
90.109 Requirement of certification—closed crankcase.
90.110 Requirement of certification—prohibited controls.
90.111 Requirement of certification—prohibition of defeat devices.
90.112 Requirement of certification—adjustable parameters.
90.113 In-use testing program for Phase 1 engines.
90.114 Requirement of certification—engine information label.
90.115 Requirement of certification—supplying production engines upon request.
90.116 Certification procedure—determining engine displacement, engine class, and engine families.
90.117 Certification procedure—test engine selection.
90.118 Certification procedure—service accumulation and usage of deterioration factors.
90.119 Certification procedure—testing.
90.120 Certification procedure—use of special test procedures.
90.121 Certification procedure—recordkeeping.
90.122 Amending the application and certificate of conformity.
90.123 Denial, revocation of certificate of conformity.
90.124 Request for hearing.
90.125 Hearing procedures.
90.126 Right of entry and access.
90.127 Fuel line permeation from nonhandheld engines and equipment.
90.128 Installation instructions.
90.129 Fuel tank permeation from handheld engines and equipment.

Subpart C—Certification Averaging, Banking, and Trading Provisions

90.201 Applicability.
90.202 Definitions.
90.203 General provisions.
90.204 Averaging.
90.205 Banking.
90.206 Trading.
90.207 Credit calculation and manufacturer compliance with emission standards.
90.208 Certification.
90.209 Maintenance of records.
90.210 End-of-year and final reports.
90.211 Request for hearing.

Subpart D—Emission Test Equipment Provisions

90.301 Applicability.
90.302 Definitions.
90.303 Symbols, acronyms, abbreviations.
90.304 Test equipment overview.
90.305 Dynamometer specifications and calibration accuracy.
90.306 Dynamometer torque cell calibration.
90.307 Engine cooling system.
90.308 Lubricating oil and test fuels.
90.309 Engine intake air temperature measurement.
90.310 Engine intake air humidity measurement.
90.311 Test conditions.
90.312 Analytical gases.
90.313 Analyzers required.

90.314 Analyzer accuracy and specifications.
90.315 Analyzer initial calibration.
90.316 Hydrocarbon analyzer calibration.
90.317 Carbon monoxide analyzer calibration.
90.318 Oxides of nitrogen analyzer calibration.
90.319 NO_X converter check.
90.320 Carbon dioxide analyzer calibration.
90.321 NDIR analyzer calibration.
90.322 Calibration of other equipment.
90.323 Analyzer bench checks.
90.324 Analyzer leakage check.
90.325 Analyzer interference checks.
90.326 Pre- and post-test analyzer calibration.
90.327 Sampling system requirements.
90.328 Measurement equipment accuracy/calibration frequency table.
90.329 Catalyst thermal stress test.
APPENDIX A TO SUBPART D OF PART 90—TABLES
APPENDIX B TO SUBPART D OF PART 90—FIGURES

Subpart E—Gaseous Exhaust Test Procedures

90.401 Applicability.
90.402 Definitions.
90.403 Symbols, acronyms, and abbreviations.
90.404 Test procedure overview.
90.405 Recorded information.
90.406 Engine parameters to be measured and recorded.
90.407 Engine inlet and exhaust systems.
90.408 Pre-test procedures.
90.409 Engine dynamometer test run.
90.410 Engine test cycle.
90.411 Post-test analyzer procedures.
90.412 Data logging.
90.413 Exhaust sample procedure—gaseous components.
90.414 Raw gaseous exhaust sampling and analytical system description.
90.415 Raw gaseous sampling procedures.
90.416 Intake air flow measurement specifications.
90.417 Fuel flow measurement specifications.
90.418 Data evaluation for gaseous emissions.
90.419 Raw emission sampling calculations—gasoline fueled engines.
90.420 CVS concept of exhaust gas sampling system.
90.421 Dilute gaseous exhaust sampling and analytical system description.
90.422 Background sample.
90.423 Exhaust gas analytical system; CVS grab sample.
90.424 Dilute sampling procedures—CVS calibration.
90.425 CVS calibration frequency.
90.426 Dilute emission sampling calculations—gasoline fueled engines.
90.427 Catalyst thermal stress resistance evaluation.
APPENDIX A TO SUBPART E OF PART 90—TABLES
APPENDIX B TO SUBPART E OF PART 90—FIGURES

Subpart F—Selective Enforcement Auditing

90.501 Applicability.
90.502 Definitions.
90.503 Test orders.
90.504 Testing by the Administrator.
90.505 Maintenance of records; submittal of information.
90.506 Right of entry and access.
90.507 Sample selection.
90.508 Test procedures.
90.509 Calculation and reporting of test results.
90.510 Compliance with acceptable quality level and passing and failing criteria for selective enforcement audits.
90.511 Suspension and revocation of certificates of conformity.
90.512 Request for public hearing.
90.513 Administrative procedures for public hearing.
90.514 Hearing procedures.
90.515 Appeal of hearing decision.
90.516 Treatment of confidential information.
APPENDIX A TO SUBPART F OF PART 90—SAMPLING PLANS FOR SELECTIVE ENFORCEMENT AUDITING OF SMALL NONROAD ENGINES

Subpart G—Importation of Nonconforming Engines

90.601 Applicability.
90.602 Definitions.
90.603 [Reserved]
90.604 General requirements.
90.605–90.610 [Reserved]
90.611 Importation for purposes other than resale.
90.612 Exemptions and exclusions.
90.613 Prohibited acts; penalties.
90.614 Treatment of confidential information.
90.615 Model year restrictions related to imported engines and equipment.

Subpart H—Manufacturer Production Line Testing Program

90.701 Applicability.
90.702 Definitions.
90.703 Production line testing by the manufacturer.
90.704 Maintenance of records; submission of information.
90.705 Right of entry and access.
90.706 Engine sample selection.
90.707 Test procedures.

90.708 Cumulative Sum (CumSum) procedure.
90.709 Calculation and reporting of test results.
90.710 Compliance with criteria for production line testing.
90.711 Suspension and revocation of certificates of conformity.
90.712 Request for public hearing.
90.713 Administrative procedures for public hearing.

Subpart I—Emission-related Defect Reporting Requirements, Voluntary Emission Recall Program, Ordered Recalls

90.801 Applicability.
90.802 Definitions.
90.803 Emission defect information report.
90.804 Voluntary emissions recall.
90.805 Reports, voluntary recall plan filing, record retention.
90.806 Responsibility under other legal provisions preserved.
90.807 Disclaimer of production warranty applicability.
90.808 Ordered recall provisions.

Subpart J—Exclusion and Exemption of Nonroad Engines From Regulations

90.901 Applicability.
90.902 Definitions.
90.903 Exclusions, application of section 216 (10) and (11) of the Act.
90.904 Who may request an exemption.
90.905 Testing exemption.
90.906 Manufacturer-owned exemption and precertification exemption.
90.907 Display exemption.
90.908 National security exemption.
90.909 Export exemptions.
90.910 Granting of exemptions.
90.911 Submission of exemption requests.
90.912 Treatment of confidential information.
90.913 Exemption for engines certified to standards for large SI engines.

Subpart K—Prohibited Acts and General Enforcement Provisions

90.1001 Applicability.
90.1002 Definitions.
90.1003 Prohibited acts.
90.1004 General enforcement provisions.
90.1005 Injunction proceedings for prohibited acts.
90.1006 Penalties.
90.1007 Bonding requirements related to compliance, enforcement, and warranty assurance.

Subpart L—Emission Warranty and Maintenance Instructions

90.1101 Applicability.
90.1102 Definitions.
90.1103 Emission warranty, warranty period.
90.1104 Furnishing of maintenance instructions to ultimate purchaser.

Subpart M—Voluntary In-Use Testing

90.1201 Applicability.
90.1202 Definitions.
90.1203 Voluntary Manufacturer In-use testing program.
90.1204 Maintenance, aging and testing of engines.
90.1205 In-use test program reporting requirements.
90.1206 Reserved.
90.1207 Entry and access.
90.1208–90.1249 [Reserved]

AUTHORITY: 42 U.S.C. 7401–7671q.

SOURCE: 60 FR 34598, July 3, 1995, unless otherwise noted.

Subpart A—General

§90.1 Applicability.

(a) This part applies to new nonroad spark-ignition engines and vehicles with gross power output at or below 19 kilowatts (kW) used for any purpose, unless we exclude them under paragraph (d) of this section.

(b) In certain cases, the regulations in this part 90 also apply to new engines with a gross power output above 19 kW that would otherwise be covered by 40 CFR part 1048 or 1051. See 40 CFR 1048.615 or 1051.145(a)(3) for provisions related to this allowance.

(c) In certain cases, the regulations in this part 90 apply to new engines below 50 cc used in motorcycles that are motor vehicles. See 40 CFR 86.447–2006 for provisions related to this allowance.

(d) The following nonroad engines and vehicles are not subject to the provisions of this part:

(1) Engines that are certified to meet the requirements of 40 CFR part 1051 or are otherwise subject to 40 CFR part 1051 (for example, engines used in snowmobiles and all-terrain vehicles). This part nevertheless applies to engines used in recreational vehicles if the manufacturer uses the provisions of 40 CFR 1051.145(a)(3) to exempt them from the requirements of 40 CFR part 1051. Compliance with the provisions of this part is a required condition of that exemption.

(2) Engines used in highway motorcycles. See 40 CFR part 86, subpart E.

(3) Propulsion marine engines. See 40 CFR part 91. This part applies with respect to auxiliary marine engines.

(4) Engines used in aircraft. See 40 CFR part 87.

(5) Engines certified to meet the requirements of 40 CFR part 1048 or are otherwise subject to 40 CFR part 1048, subject to the provisions of § 90.913.

(6) Hobby engines.

(7) Engines that are used exclusively in emergency and rescue equipment where no certified engines are available to power the equipment safely and practically, but not including generators, alternators, compressors or pumps used to provide remote power to a rescue tool. The equipment manufacturer bears the responsibility to ascertain on an annual basis and maintain documentation available to the Administrator that no appropriate certified engine is available from any source.

(8) Engines that are subject to emission standards under 40 CFR part 1054. See 40 CFR 1054.1 to determine when part 1054 applies. Note that certain requirements and prohibitions apply to engines built on or after January 1, 2010 if they are installed in equipment that will be used solely for competition, as described in 40 CFR 1054.1 and 40 CFR 1068.1; those provisions apply instead of the provisions of this part 90.

(e) Engines subject to the provisions of this subpart are also subject to the provisions found in subparts B through N of this part, except that Subparts C, H, M and N of this part apply only to Phase 2 engines as defined in this subpart.

(f) Certain text in this part is identified as pertaining to Phase 1 or Phase 2 engines. Such text pertains only to engines of the specified Phase. If no indication of Phase is given, the text pertains to all engines, regardless of Phase.

(g) This part also applies to engines under 50 cc used in motorcycles that are motor vehicles if the manufacturer uses the provisions of 40 CFR 86.447–2006 to meet the emission standards in this part instead of the requirements of 40 CFR part 86. In this case, compliance with the provisions of this part is a required condition of that exemption.

(h) This part applies as specified in 40 CFR part 60 subpart JJJJ, to spark-ignition engines subject to the standards of 40 CFR part 60, subpart JJJJ.

[67 FR 68339, Nov. 8, 2002, as amended at 69 FR 2441, Jan. 15, 2004; 70 FR 40448, July 13, 2005; 73 FR 3612, Jan. 18, 2008; 73 FR 59179, Oct. 8, 2008]

§ 90.2 Effective dates.

(a) This subpart applies to nonroad spark-ignition engines at or below 19 kW effective with the 1997 model year.

(b) Notwithstanding paragraph (a) of this section, this subpart applies to class V engines, as specified in § 90.116(b)(5), that are preempted from regulation in California by section 209(e)(1)(A) of the Act, effective January 1, 1998.

(c) Notwithstanding paragraphs (a) and (b) of this section, engines used in recreational vehicles with engine rated speed greater than or equal to 5,000 rpm and with no installed speed governor are not subject to the provisions of this part through the 2005 model year. Starting with the 2006 model year, all the requirements of this part apply to engines used in these vehicles if they are not included in the scope of 40 CFR part 1051.

(d) Engines used in emergency and rescue equipment as described in § 90.1(d)(7) are subject to the provisions of this part through December 31, 2009. Starting January 1, 2010 the provisions in 40 CFR 1054.660 apply instead of those in § 90.1(d)(7).

(e) Engines imported for personal use are subject to the provisions of § 90.611 through December 31, 2009. Starting January 1, 2010 the provisions in 40 CFR 1054.630 apply instead of those in § 90.611.

[60 FR 34598, July 3, 1995, as amended at 67 FR 68339, Nov. 8, 2002; 73 FR 59179, Oct. 8, 2008]

§ 90.3 Definitions.

The following definitions apply to part 90. All terms not defined herein have the meaning given them in the Act.

Act means the Clean Air Act, as amended, 42 U.S.C. 7401 et seq.

Adjustable parameter means any device, system, or element of design

which is physically capable of being adjusted (including those which are difficult to access) and which, if adjusted, may affect emissions or engine performance during emission testing or normal in-use operation.

Administrator means the Administrator of the Environmental Protection Agency or his or her authorized representative.

Aftertreatment means the passage of exhaust gases through a device or system such as a catalyst whose purpose is to chemically alter the gases prior to their release to the atmosphere.

Aircraft means any vehicle capable of sustained air travel above treetop heights.

Amphibious vehicle means a vehicle with wheels or tracks that is designed primarily for operation on land and secondarily for operation in water.

Auxiliary emission control device (AECD) means any element of design that senses temperature, vehicle speed, engine RPM, transmission gear, or any other parameter for the purpose of activating, modulating, delaying, or deactivating the operation of any part of the emission control system.

Certification means, with respect to new nonroad engines, obtaining a certificate of conformity for an engine family complying with the nonroad engine emission standards and requirements specified in this part.

DF or *df* means deterioration factor.

Eligible production or *U.S. production* means Phase 2 engines produced for purposes of being used in the United States, and includes any engine exported and subsequently imported in a new piece of equipment, but excludes any engine introduced into commerce, by itself or in a piece of equipment, for use in a state that has established its own emission requirements applicable to such engines pursuant to a waiver granted by EPA under section 209(e) of the Clean Air Act.

Emission control system means any device, system, or element of design which controls or reduces the emission of substances from an engine.

Engine as used in this part, refers to nonroad engine.

Engine family means a group of engines, as specified in §90.116.

Engine manufacturer means any person engaged in the manufacturing or assembling of new nonroad engines or the importing of such engines for resale, or who acts for and is under the control of any such person in connection with the distribution of such engines. Engine manufacturer does not include any dealer with respect to new nonroad engines received by such person in commerce.

EPA enforcement officer means any officer, employee, or authorized representative of the U.S. Environmental Protection Agency so designated in writing by the Administrator (or by his or her designee).

Equipment manufacturer means a manufacturer of equipment using engines covered by the provisions of this Part who does not also manufacture engines covered by the provisions of this Part.

Exhaust emissions means matter emitted into the atmosphere from any opening downstream from the exhaust port of a nonroad engine.

Family Emission Limit or *FEL* means an emission level that is declared by the manufacturer to serve in lieu of an emission standard for the purposes of certification, production line testing, and Selective Enforcement Auditing for engines participating in the averaging, banking and trading program. A declared FEL will also serve in lieu of an emission standard where the manufacturer elects to perform voluntary in-use testing under this part. An FEL must be expressed to the same number of decimal places as the applicable emission standard.

Fuel line has the meaning given in 40 CFR 1054.801.

Fuel system means all components involved in the transport, metering, and mixture of the fuel from the fuel tank to the combustion chamber(s) including the following: fuel tank, fuel tank cap, fuel pump, fuel lines, oil injection metering system, carburetor or fuel injection components, and all fuel system vents.

Good engineering judgment has the meaning given in 40 CFR 1068.30. See 40 CFR 1068.5 for the administrative process we use to evaluate good engineering judgment.

Gross power means the power measured at the crankshaft or its equivalent, the engine being equipped only with the standard accessories (such as oil pumps, coolant pumps, and so forth) necessary for its operation on the test bed.

Handheld equipment engine means a nonroad engine that meets the requirements specified in §90.103(a)(2)(I) through (v).

$HC+NO_X$ means total hydrocarbons plus oxides of nitrogen.

Hobby engines means engines used in reduced-scale models of vehicles that are not capable of transporting a person (for example, model airplanes).

Marine engine means a nonroad engine that is installed or intended to be installed on a marine vessel. This includes a portable auxiliary marine engine only if its fueling, cooling, or exhaust system is an integral part of the vessel. There are two kinds of marine engines:

(1) Propulsion marine engine means a marine engine that moves a vessel through the water or directs the vessel's movement.

(2) Auxiliary marine engine means a marine engine not used for propulsion.

Marine vessel has the meaning given in 1 U.S.C. 3, except that it does not include amphibious vehicles. The definition in 1 U.S.C. 3 very broadly includes every craft capable of being used as a means of transportation on water.

Maximum engine power means the maximum value of gross power at rated speed.

Model year (MY) means the manufacturer's annual new model production period which includes January 1 of the calendar year, ends no later than December 31 of the calendar year, and does not begin earlier than January 2 of the previous calendar year. Where a manufacturer has no annual new model production period, model year means calendar year.

New, for the purposes of this part, means a nonroad engine or nonroad vehicle the equitable or legal title to which has never been transferred to an ultimate purchaser. Where the equitable or legal title to the engine or vehicle is not transferred to an ultimate purchaser until after the engine or vehicle is placed into service, then the engine or vehicle will no longer be new after it is placed into service. A nonroad engine or vehicle is placed into service when it is used for its functional purposes. With respect to imported nonroad engines or nonroad vehicles, the term ''new'' means an engine or vehicle that is not covered by a certificate of conformity issued under this part at the time of importation, and that is manufactured after the effective date of a regulation issued under this part which is applicable to such engine or vehicle (or which would be applicable to such engine or vehicle had it been manufactured for importation into the United States).

New Class I engine family means any group of engines that employ a design that is different from engine families that the engine manufacturer has previously certified, and does not include any engine family certified on the basis of carryover data or any engine family that differs from another engine family solely as a result of a running change.

$NMHC+NO_X$ means nonmethane hydrocarbons plus oxides of nitrogen.

Nonroad engine means:

(1) Except as discussed in paragraph (2) of this definition, any internal combustion engine:

(i) In or on a piece of equipment that is self-propelled or serves a dual purpose by both propelling itself and performing another function (such as garden tractors, off-highway mobile cranes, and bulldozers); or

(ii) In or on a piece of equipment that is intended to be propelled while performing its function (such as lawnmowers and string trimmers); or

(iii) That, by itself or in or on a piece of equipment, is portable or transportable, meaning designed to be and capable of being carried or moved from one location to another. Indicia of transportability include, but are not limited to, wheels, skids, carrying handles, dolly, trailer, or platform.

(2) An internal combustion engine is not a nonroad engine if:

(i) The engine is used to propel a motor vehicle or a vehicle used solely for competition, or is subject to standards promulgated under section 202 of the Act; or

(ii) The engine is regulated by a federal New Source Performance Standard promulgated under section 111 of the Act; or

(iii) The engine otherwise included in paragraph (1)(iii) of this definition remains or will remain at a location for more than 12 consecutive months or a shorter period of time for an engine located at a seasonal source. A location is any site at a building, structure, facility, or installation. Any engine (or engines) that replaces an engine at a location and that is intended to perform the same or similar function as the engine replaced will be included in calculating the consecutive time period. An engine located at a seasonal source is an engine that remains at a seasonal source during the full annual operating period of the seasonal source. A seasonal source is a stationary source that remains in a single location on a permanent basis (i.e., at least two years) and that operates at that single location approximately three months (or more) each year. This paragraph does not apply to an engine after the engine is removed from the location.

Nonroad vehicle means a vehicle that is powered by a nonroad engine as defined in this section and that is not a motor vehicle or a vehicle used solely for competition. Nonroad vehicle also includes equipment that is powered by nonroad engines.

Nonroad vehicle manufacturer means any person engaged in the manufacturing or assembling of new nonroad vehicles or importing such vehicles for resale, or who acts for and is under the control of any such person in connection with the distribution of such vehicles. A nonroad vehicle manufacturer does not include any dealer with respect to new nonroad vehicles received by such person in commerce.

Operating hours means:

(1) For engine storage areas or facilities, all times during which personnel other than custodial personnel are at work in the vicinity of the storage area or facility and have access to it.

(2) For all other areas or facilities, all times during which an assembly line is in operation or all times during which testing, maintenance, service accumulation, production or compilation of records, or any other procedure or activity related to certification testing, to translation of designs from the test stage to the production stage, or to engine manufacture or assembly is being carried out in a facility.

Overhead valve engine means an otto-cycle, four stroke engine in which the intake and exhaust valves are located above the combustion chamber within the cylinder head. Such engines are sometimes referred to as ''valve-in-head'' engines.

Phase 1 engine means any handheld or nonhandheld engine, that was produced under a certificate of conformity issued under the regulations in this part to the standard levels defined for Phase 1.

Phase 2 engine means any handheld and nonhandheld engine that was produced under a certificate of conformity under the regulations in this part to the standards defined for Phase 2 engines.

Presentation of credentials means the display of the document designating a person as an EPA enforcement officer or EPA authorized representative.

Recreational means, for purposes of this part, relating to a vehicle intended by the vehicle manufacturer to be operated primarily for pleasure.

Round, rounded or rounding means, unless otherwise specified, that numbers will be rounded according to ASTM-E29–93a, which is incorporated by reference in this part pursuant to §90.7.

Scheduled maintenance means any adjustment, repair, removal, disassembly, cleaning, or replacement of components or systems required by the manufacturer to be performed on a periodic basis to prevent part failure or vehicle or engine malfunction, or those actions anticipated as necessary to correct an overt indication of malfunction or failure for which periodic maintenance is not appropriate.

Side valve engine means an otto-cycle, four stroke engine in which the intake and exhaust valves are located to the side of the cylinder, not within the cylinder head. Such engines are sometimes referred to as ''L-head'' engines.

Small volume engine family means any handheld engine family or any

nonhandheld engine family whose eligible production in a given model year are projected at the time of certification to be no more than 5,000 engines.

Small volume engine manufacturer means, for nonhandheld engines, any engine manufacturer whose total eligible production of nonhandheld engines are projected at the time of certification of a given model year to be no more than 10,000 nonhandheld engines. For handheld engines, the term *small volume engine manufacturer* means any engine manufacturer whose total eligible production of handheld engines are projected at the time of certification of a given model year to be no more than 25,000 handheld engines.

Small volume equipment manufacturer means, for nonhandheld equipment, any equipment manufacturer whose production of nonhandheld equipment subject to regulation under this part or powered by engines regulated under this part, does not exceed 5,000 pieces for a given model year or annual production period excluding that equipment intended for introduction into commerce for use in a state that has established its own emission requirements applicable to such equipment or engines in such equipment, pursuant to a waiver granted by EPA under section 209(e) of the Clean Air Act. For handheld equipment, the term *small volume equipment manufacturer* has the same meaning except that it is limited to 25,000 pieces of handheld equipment rather than 5,000 pieces of nonhandheld equipment.

Small volume equipment model means, for nonhandheld equipment, any unique model of equipment whose production subject to regulations under this part or powered by engines regulated under this part, does not exceed 500 pieces for a given model year or annual production period excluding that equipment intended for introduction into commerce for use in a state that has established its own emission requirements applicable to such equipment or engines in such equipment, pursuant to a waiver granted by EPA under section 209(e) of the Clean Air Act. For handheld equipment, the term *small volume equipment model* has the same meaning except that it is limited to 5,000 pieces of handheld equipment, rather than 500 pieces of nonhandheld equipment.

Test engine means the engine or group of engines that a manufacturer uses during certification to determine compliance with emission standards.

Ultimate purchaser means, with respect to any new nonroad engine or new nonroad vehicle, the first person who in good faith purchases such new nonroad engine or vehicle for purposes other than resale.

United States means the States, the District of Columbia, the Commonwealth of Puerto Rico, the Commonwealth of the Northern Mariana Islands, Guam, American Samoa, and the U.S. Virgin Islands.

Used solely for competition means exhibiting features that are not easily removed and that would render its use other than in competition unsafe, impractical, or highly unlikely.

Warranty period means the period of time the engine or part is covered by the warranty provisions.

[60 FR 34598, July 3, 1995, as amended at 64 FR 15235, Mar. 30, 1999; 65 FR 24305, Apr. 25, 2000; 67 FR 68339, Nov. 8, 2002; 70 FR 40448, July 13, 2005; 73 FR 59179, Oct. 8, 2008]

§ 90.4 Treatment of confidential information.

(a) Any manufacturer may assert that some or all of the information submitted pursuant to this part is entitled to confidential treatment as provided by part 2, subpart B of this chapter.

(b) Any claim of confidentiality must accompany the information at the time it is submitted to EPA.

(c) To assert that information submitted pursuant to this subpart is confidential, a manufacturer must indicate clearly the items of information claimed confidential by marking, circling, bracketing, stamping, or otherwise specifying the confidential information. Furthermore, EPA requests, but does not require, that the submitter also provide a second copy of its submittal from which all confidential information has been deleted. If a need arises to publicly release nonconfidential information, EPA will assume that the submitter has accurately deleted

the confidential information from this second copy.

(d) If a claim is made that some or all of the information submitted pursuant to this subpart is entitled to confidential treatment, the information covered by that confidentiality claim will be disclosed by the Administrator only to the extent and by means of the procedures set forth in part 2, subpart B of this chapter.

(e) Information provided without a claim of confidentiality at the time of submission may be made available to the public by EPA without further notice to the submitter, in accordance with §2.204(c)(2)(i)(A) of this chapter.

§90.5 Acronyms and abbreviations.

The following acronyms and abbreviations apply to part 90.

AECD—Auxiliary emission control device
ASME—American Society of Mechanical Engineers
ASTM—American Society for Testing and Materials
CAA—Clean Air Act
CAAA—Clean Air Act Amendments of 1990
CLD—chemiluminescent detector
CO—Carbon monoxide
CO_2—Carbon dioxide
EPA—Environmental Protection Agency
FTP—Federal Test Procedure
g/kW-hr—grams per kilowatt hour
HC—hydrocarbons
HCLD—heated chemiluminescent detector
HFID—heated flame ionization detector
ICI—independent Commercial Importer
NDIR—non-dispersive infrared analyzer
NIST—National Institute for Standards and Testing
NO—Nitric oxide
NO_2—Nitrogen dioxide
NO_X—Oxides of nitrogen
O_2—Oxygen
OEM—original equipment manufacturer
PMD—paramagnetic detector
SAE—Society of Automotive Engineers
SEA—Selective Enforcement Auditing
SI—spark-ignition
U.S.C.—United States Code
VOC—Volatile organic compounds
ZROD—zirconiumdioxide sensor

§90.6 Table and figure numbering; position.

(a) Tables for each subpart appear in an appendix at the end of the subpart. Tables are numbered consecutively by order of appearance in the appendix. The table title will indicate the topic.

(b) Figures for each subpart appear in an appendix at the end of the subpart. Figures are numbered consecutively by order of appearance in the appendix. The figure title will indicate the topic.

§90.7 Reference materials.

(a) *Incorporation by reference.* The documents in paragraph (b) of this section have been incorporated by reference. The incorporation by reference was approved by the Director of the Federal Register in accordance with 5 U.S.C. 552(a) and 1 CFR part 51. Copies may be inspected at U.S. EPA Air and Radiation Docket, room M–1500, 401 M St., SW., Washington D.C. 20460, or at the National Archives and Records Administration (NARA). For information on the availability of this material at NARA, call 202–741–6030, or go to: *http://www.archives.gov/federal_register/code_of_federal_regulations/ibr_locations.html.*

(b) The following paragraphs and tables set forth the material that has been incorporated by reference in this part.

(1) *ASTM material.* The following table sets forth material from the American Society for Testing and Materials which has been incorporated by reference. The first column lists the number and name of the material. The second column lists the section(s) of this part, other than §90.7, in which the matter is referenced. The second column is presented for information only and may not be all inclusive. Copies of these materials may be obtained from American Society for Testing and Materials, 1916 Race St., Philadelphia, PA 19103.

Document number and name	40 CFR part 90 reference
ASTM D86–93:	
Standard Test Method for Distillation of Petroleum Products.	Appendix A to subpart D, Table 3.
ASTM D1319–89:	
Standard Test Method for Hydrocarbon Types in Liquid Petroleum Products by Fluorescent Indicator Adsorption.	Appendix A to subpart D, Table 3.
ASTM D2622–92:	
Standard Test Method for Sulfur in Petroleum Products by X-ray Spectrometry.	Appendix A to subpart D, Table 3.
ASTM D2699–92:	

Document number and name	40 CFR part 90 reference
Standard Test Method for Knock Characteristics of Motor Fuels by the Research Method.	Appendix A to subpart D, Table 3.
ASTM D2700–92:	
Standard Test Method for Knock Characteristics of Motor and Aviation Fuels by the Motor Method.	Appendix A to subpart D, Table 3.
ASTM D3231–89:	
Standard Test Method for Phosphorus in Gasoline.	Appendix A to subpart D, Table 3.
ASTM D3606–92:	
Standard Test Method for Determination of Benzene and Toluene in Finished Motor and Aviation Gasoline by Gas Chromatography.	Appendix A to subpart D, Table 3.
ASTM D5191–93a:	
Standard Test Method for Vapor Pressure of Petroleum Products (Mini Method).	Appendix A to subpart D, Table 3.
ASTM E29–93a:	
Standard Practice for Using Significant Digits in Test Data to Determine Conformance with Specifications.	90.116; 90.509.

(2) *SAE material*. The following table sets forth material from the Society of Automotive Engineers which has been incorporated by reference. The first column lists the number and name of the material. The second column lists the section(s) of this part, other than § 90.7, in which the matter is referenced. The second column is presented for information only and may not be all inclusive. Copies of these materials may be obtained from Society of Automotive Engineers International, 400 Commonwealth Dr., Warrendale, PA 15096–0001.

Document number and name	40 CFR part 90 reference
SAE J1930 September 1991, Electrical/Electronic Systems Diagnostic Terms, Definitions, Abbreviations and Acronyms.	90.114
SAE Paper 770141, Optimization of a Flame Ionization Detector for Determination of Hydrocarbon in Diluted Automotive Exhausts, Glenn D. Reschke, 1977.	90.316

Subpart B—Emission Standards and Certification Provisions

§ 90.101 Applicability.

(a) The requirements of this subpart B are applicable to all nonroad engines and vehicles subject to the provisions of subpart A of this part.

(b) In a given model year, you may ask us to approve the use of procedures for certification, labeling, reporting and recordkeeping, or other administrative requirements specified in 40 CFR part 1054 or 1068 instead of the comparable procedures specified in this part 90. We may approve the request as long as it does not prevent us from ensuring that you fully comply with the intent of this part.

[73 FR 59179, Oct. 8, 2008]

§ 90.102 Definitions.

The definitions in subpart A of part 90 apply to this subpart. All terms not defined herein or in subpart A have the meaning given them in the Act. The following definitions also apply to this subpart.

Attitudinal control means the operator regulates either the horizontal or vertical position of the equipment, or both.

Carry means the operator completely bears the weight of the equipment, including the engine.

Support means that the operator holds the equipment in position so as to prevent it from falling, slipping or sinking. It is not necessary for the entire weight of the equipment to be borne by the operator.

§ 90.103 Exhaust emission standards.

(a) Exhaust emissions for new Phase 1 and Phase 2 nonroad spark ignition engines at or below 19 kilowatts (kW), shall not exceed the following levels. Throughout this part, NMHC+NO_X standards are applicable only to natural gas fueled engines at the option of the manufacturer, in lieu of HC+NO_X standards.

TABLE 1—PHASE 1 EXHAUST EMISSION STANDARDS

[Grams per kilowatt-hour]

Engine displacement class	Hydrocarbons+oxides of nitrogen ($HC+NO_X$)	Hydrocarbons	Carbon monoxide	Oxides of nitrogen (NO_X)
I	16.1		519	
II	13.4		519	
III		295	805	5.36
IV		241	805	5.36
V		161	603	5.36

TABLE 2—PHASE 2 CLASS I-A, CLASS I-B, AND CLASS I ENGINE EXHAUST EMISSION STANDARDS

[grams per kilowatt-hour]

Engine class	$HC+NO_X$	$NMHC+NO_X$	CO	Effective date
I	16.1	14.8	610	August 1, 2007; in addition, any Class I engine family initially produced on or after August 1, 2003 must meet the Phase 2 Class I standards before they may be introduced into commerce.
I-A	50		610	2001 Model Year.
I-B	40	37	610	2001 Model Year.

TABLE 3—PHASE 2 CLASS II ENGINE EXHAUST EMISSION STANDARDS BY MODEL YEAR

[grams per kilowatt-hour]

Engine Class	Emission requirement	Model Year				
		2001	2002	2003	2004	2005 and later
II	$HC+NO_X$	18.0	16.6	15.0	13.6	12.1
	$NMHC+NO_X$	16.7	15.3	14.0	12.7	11.3
	CO	610	610	610	610	610

TABLE 4—PHASE 2 HANDHELD EXHAUST EMISSION STANDARDS BY MODEL YEAR

[grams per kilowatt-hour]

Engine class	Emission requirement	Model year					
		2002	2003	2004	2005	2006	2007 and later
Class III	$HC+NO_X$	238	175	113	50	50	50
	CO	805	805	805	805	805	805
Class IV	$HC+NO_X$	196	148	99	50	50	50
	CO	805	805	805	805	805	805
Class V	$HC+NO_X$			143	119	96	72
	CO			603	603	603	603

(1) Each engine displacement class has a unique set of exhaust emission standards. Boundaries for each class are indicated in § 90.116(b).

(2) Emission standards for classes III, IV, V may be used only if an engine meets at least one of the following requirements:

(i) The engine must be used in a piece of equipment that is carried by the operator throughout the performance of its intended function(s);

(ii) The engine must be used in a piece of equipment that must operate multipositionally, such as upside down or sideways, to complete its intended function(s);

(iii) The engine must be used in a piece of equipment for which the combined engine and equipment dry weight is under 14 kilograms, no more than two wheels are present on the equipment, and at least one of the following attributes is also present:

(A) The operator must alternately provide support or carry the equipment throughout the performance of its intended function(s);

(B) The operator must provide support or attitudinal control for the equipment throughout the performance of its intended function(s); and

(C) The engine must be used in a generator or pump;

(iv) The engine must be used to power one-person augers, with a combined engine and equipment dry weight under 20 kilograms;

(v) The engine must be used in a recreational application, with a combined total vehicle dry weight under 20 kilograms;

(vi) Where a piece of equipment otherwise meeting the requirements of paragraph (a)(2)(iii) or (a)(2)(iv) of this section exceeds the applicable weight limit, emission standards for class III, IV or V, as applicable, may still apply if the equipment exceeds the weight limit by no more than the extent necessary to allow for the incremental weight of a four stroke engine or the incremental weight of a two stroke engine having enhanced emission control acceptable to the Administrator. Any manufacturer utilizing this provision to exceed the subject weight limitations shall maintain and make available to the Administrator upon request, documentation to substantiate that the exceedance of either weight limitation is a direct result of application of a four stroke or enhanced two stroke engine having the same, less or very similar power to two stroke engines that could otherwise be used to power the equipment and remain within the weight limitations.

(3) Notwithstanding paragraph (a)(2) of this section, two stroke engines used to power lawnmowers or other nonhandheld equipment may meet Phase 1 Class III, IV or V standards and requirements, as appropriate, through model year 2002 subject to the provisions of § 90.107(e), (f) and (h). Such engines shall not be included in any computations of Phase 2 averaging, banking, or trading credits or eligible production.

(4) Notwithstanding paragraph (a)(2) of this section, two-stroke engines used to power snowthrowers may meet class III, IV, or V standards.

(5) Notwithstanding paragraph (a)(2) of this section, engines used exclusively to power products which are used exclusively in wintertime, such as snowthrowers and ice augers, at the option of the engine manufacturer, need not certify to or comply with standards regulating emissions of HC, NO_X. $HC+NO_X$ or $NMHC+NO_X$. as applicable. If the manufacturer exercises the option to certify to standards regulating such emissions, such engines must meet such standards. If the engine is to be used in any equipment or vehicle other than an exclusively wintertime product such as a snowthrower or ice auger, it must be certified to the applicable standard regulating emissions of HC, NO_X. $HC+NO_X$ or $NMHC+NO_X$ as applicable.

(6) In lieu of certifying to the applicable Phase 2 standards, small volume engine manufacturers as defined in this part may, at their option, certify their engine families as Phase 1 engines until the 2010 model year for nonhandheld engine families excluding Class I-A and Class I-B engine families, until the 2008 model year for Class III and Class IV engine families, and until the 2010 model year for Class V engine families. Such engines shall not exceed the applicable Phase 1 standards and are excluded from the averaging, banking and trading program and any related credit calculations. Beginning with the 2010 model year for nonhandheld engine families, the 2008 model year for Class III and Class IV engine families, and the 2010 model year for Class V engine families, these engines must meet the applicable Phase 2 standards.

(7) In lieu of certifying to the applicable Phase 2 standards, manufacturers of small volume engine families, as defined in this part may, at their option, certify their small volume engine families as Phase 1 engines until the 2010 model year for nonhandheld engine families excluding Class I-A and Class I-B engine families, until the 2008 model year for Class III and Class IV engine families, and until the 2010 model year for Class V engine families. Such engines shall not exceed the applicable Phase 1 standards and are excluded from the averaging, banking and trading program and any related credit calculations. Beginning with the 2010 model year for nonhandheld engine families, the 2008 model year for Class

III and Class IV engine families, and the 2010 model year for Class V engine families, these engines must meet the applicable Phase 2 standards.

(8) Notwithstanding the standards shown in Table 3 of this section, the $HC+NO_X$ ($NMHC+NO_X$) standard for Phase 2 Class II side valve engine families with annual production of 1000 or less shall be 24.0 g/kW-hr (22.0 g/kW-hr) for model years 2010 and later. Engines produced subject to this provision may not exceed this standard and are excluded from the averaging, banking and trading program and any related credit calculations.

(b) Exhaust emissions will be measured using the procedures set forth in subpart E of this part.

[60 FR 34598, July 3, 1995, as amended at 61 FR 58300, Nov. 13, 1996; 62 FR 42643, Aug. 7, 1997; 64 FR 15236, Mar. 30, 1999; 65 FR 24305, Apr. 25, 2000; 67 FR 68340, Nov. 8, 2002]

§ 90.104 Compliance with emission standards.

Paragraphs (a) through (c) of this section apply to Phase 1 engines only. Paragraphs (d) through (h) of this section apply only to Phase 2 engines.

(a) If all test engines representing an engine family have emissions less than or equal to each emission standard in a given engine displacement class, that family complies with that class of emission standards.

(b) If any test engine representing an engine family has emissions greater than any one emission standard in a given engine displacement class, that family will be deemed not in compliance with that class of emission standards.

(c) If catalysts are used in an engine family, the engine manufacturer must affirm that catalyst durability has been confirmed on the basis of the evaluation procedure that is specified in subpart E of this part.

(d) The exhaust emission standards (FELs, where applicable) for Phase 2 engines set forth in this part apply to the emissions of the engines for their full useful lives as determined pursuant to § 90.105.

(e) For all Phase 2 engines, if all test engines representing an engine family have emissions, when properly tested according to procedures in this part, less than or equal to each Phase 2 emission standard (FEL, where applicable) in a given engine class and given model year, when multiplicatively adjusted by the deterioration factor determined in this section, that family complies with that class of emission standards for purposes of certification. If any test engine representing an engine family has emissions adjusted multiplicatively by the deterioration factor determined in this section, greater than any one emission standard (FEL, where applicable) for a given displacement class, that family does not comply with that class of emission standards.

(f) Each engine manufacturer must comply with all provisions of the averaging, banking and trading program outlined in subpart C of this part for each engine family participating in that program.

(g)(1) Small volume engine manufacturers and small volume engine families may, at their option, take deterioration factors for $HC+NO_X$ ($NMHC+NO_X$) and CO from Table 1 or Table 2 of this paragraph (g), or they may calculate deterioration factors for $HC+NO_X$ ($NMHC+NO_X$) and CO according to the process described in paragraph (h) of this section. For technologies that are not addressed in Table 1 or Table 2 of this paragraph (g), the manufacturer may ask the Administrator to assign a deterioration factor prior to the time of certification. The provisions of this paragraph (g) do not apply to Class I-A and Class I-B engines.

(2) Table 1 follows:

TABLE 1: NONHANDHELD ENGINE $HC+NO_X$ ($NMHC+NO_X$) AND CO ASSIGNED DETERIORATION FACTORS FOR SMALL VOLUME MANUFACTURERS AND SMALL VOLUME ENGINE FAMILIES

Engine class	Side valve engines		Overhead valve engines		Engines with aftertreatment
	$HC+NO_X$ ($NMHC+NO_X$)	CO	$HC+NO_X$ ($NMHC+NO_X$)	CO	
Class I	2.1	1.1	1.5	1.1	Dfs must be calculated using the formula in § 90.104(g)(4).
Class II	1.6	1.1	1.4	1.1	

(3) Table 2 follows:

TABLE 2—HANDHELD ENGINE $HC+NO_X$ AND CO ASSIGNED DETERIORATION FACTORS FOR SMALL VOLUME MANUFACTURERS AND SMALL VOLUME ENGINE FAMILIES

Engine class	Two-stroke engines [1]		Four-stroke engines		Engines with aftertreatment
	$HC+NO_X$	CO	$HC+NO_X$	CO	
Class III	1.1	1.1	1.5	1.1	Dfs must be calculated using the formula in § 90.104(g)(4).
Class IV	1.1	1.1	1.5	1.1	
Class V	1.1	1.1	1.5	1.1	

[1] Two-stroke technologies to which these assigned deterioration factors apply include conventional two-strokes, compression wave designs, and stratified scavenging designs.

(4) Formula for calculating deterioration factors for engines with aftertreatment:

$$DF = [(NE * EDF) - (CC * F)]/(NE - CC)$$

Where:

DF = deterioration factor.

NE = new engine emission levels prior to the catalyst (g/kW-hr)

EDF = deterioration factor for engines without catalyst as shown in Table 1 or Table 2 of this paragraph (g)

CC = amount converted at 0 hours in g/kW-hr.

F = 0.8 for HC (NMHC), 0.0 for NO_X. and 0.8 for CO for all classes of engines.

(h)(1) Manufacturers shall obtain an assigned df or calculate a df, as appropriate, for each regulated pollutant for all Phase 2 engine families. Such dfs shall be used for certification, production line testing, and Selective Enforcement Auditing.

(2) For engines not using assigned dfs from Table 1 or Table 2 of paragraph (g) of this section, dfs shall be determined as follows:

(i) On at least one test engine representing the configuration chosen to be the most likely to exceed $HC+NO_X$ ($NMHC+NO_X$) emission standards, (FELs where applicable), and constructed to be representative of production engines pursuant to § 90.117, conduct full Federal test procedure emission testing pursuant to the regulations of subpart E of this part at the number of hours representing stabilized emissions pursuant to § 90.118. If more than one engine is tested, average the results and round to the same number of decimal places contained in the applicable standard, expressed to one additional significant figure;

(ii) Conduct such emission testing again following aging the engine. The aging procedure should be designed to allow the manufacturer to appropriately predict the in-use emission deterioration expected over the useful life of the engine, taking into account the type of wear and other deterioration mechanisms expected under typical consumer use which could affect emissions performance. If more than one engine is tested, average the results and round to the same number of decimal places contained in the applicable standard, expressed to one additional significant figure;

(iii) Divide the full useful life emissions (average emissions, if applicable) for each regulated pollutant by the stabilized emissions (average emissions, if applicable) and round to two significant figures. The resulting number

shall be the df, unless it is less than 1.0, in which case the df shall be 1.0.

(iv) At the manufacturer's option additional emission test points can be scheduled between the stabilized emission test point and the full useful life test period. If intermediate tests are scheduled, the test points must be evenly spaced over the full useful life period (plus or minus 2 hours) and one such test point shall be at one-half of full useful life (plus or minus 2 hours). For each pollutant $HC+NO_X$ ($NMHC+NO_X$) and CO, a line must be fitted to the data points treating the initial test as occurring at hour zero, and using the method of least-squares. The deterioration factor is the calculated emissions durability period divided by the calculated emissions at zero hours.

(3) EPA may reject a df if it has evidence that the df is not appropriate for that family within 30 days of receipt from the manufacturer. The manufacturer must retain actual emission test data to support its choice of df and furnish that data to the Administrator upon request. Manufacturers may request approval by the Administrator of alternate procedures for determining deterioration. Any submitted df not rejected by EPA within 30 days shall be deemed to have been approved.

(4) Calculated deterioration factors may cover families and model years in addition to the one upon which they were generated if the manufacturer submits a justification acceptable to the Administrator in advance of certification that the affected engine families can be reasonably expected to have similar emission deterioration characteristics.

(5) Engine families that undergo running changes need not generate a new df if the manufacturer submits a justification acceptable to the Administrator concurrent with the running change that the affected engine families can be reasonably expected to have similar emission deterioration characteristics.

[60 FR 34598, July 3, 1995, as amended by 64 FR 15237, Mar. 30, 1999; 65 FR 24306, Apr. 25, 2000]

§ 90.105 Useful life periods for Phase 2 engines.

(a) Manufacturers shall declare the applicable useful life category for each engine family at the time of certification as described in this section. Such category shall be the category which most closely approximates the expected useful lives of the equipment into which the engines are anticipated to be installed as determined by the engine manufacturer. Manufacturers shall retain data appropriate to support their choice of useful life category for each engine family. Such data shall be furnished to the Administrator upon request.

(1) For nonhandheld engines: Manufacturers shall select a useful life category from Table 1 of this section at the time of certification. Engines with gross power output greater than 19 kW that have an engine displacement less than or equal to one liter that optionally certify under this part as allowed in § 90.1(a), must certify to a useful life period of 1,000 hours.

(2) Table 1 follows:

TABLE 1: USEFUL LIFE CATEGORIES FOR NONHANDHELD ENGINES [HOURS]

Class I	125	250	500
Class II	250	500	1000
Class I-A	50	125	300
Class I-B	125	250	500

(3) For handheld engines: Manufacturers shall select a useful life category from Table 2 of this paragraph (a) at the time of certification.

(4) Table 2 follows:

TABLE 2: USEFUL LIFE CATEGORIES FOR HANDHELD ENGINES (HOURS)

Class III	50	125	300
Class IV	50	125	300
Class V	50	125	300

(5) Data to support a manufacturer's choice of useful life category, for a given engine family, may include but are not limited to:

(i) Surveys of the life spans of the equipment in which the subject engines are installed;

(ii) Engineering evaluations of field aged engines to ascertain when engine performance deteriorates to the point

where usefulness and/or reliability is impacted to a degree sufficient to necessitate overhaul or replacement;

(iii) Warranty statements and warranty periods;

(iv) Marketing materials regarding engine life;

(v) Failure reports from engine customers; and

(vi) Engineering evaluations of the durability, in hours, of specific engine technologies, engine materials or engine designs.

(b) [Reserved]

[64 FR 15238, Mar. 30, 1999, as amended at 65 FR 24307, Apr. 25, 2000]

§ 90.106 Certificate of conformity.

(a)(1) Except as provided in § 90.2(b), every manufacturer of new engines produced during or after model year 1997 must obtain a certificate of conformity covering such engines; however, engines manufactured during an annual production period beginning prior to September 1, 1996 are not required to be certified.

(2) Except as required in paragraph (b)(3) of this section, Class II engines manufactured during an annual production period beginning prior to September 1, 2000 are not required to meet Phase 2 requirements.

(b)(1) The annual production period begins either when an engine family is first produced or on January 2 of the calendar year preceding the year for which the model year is designated, whichever date is later. The annual production period ends either when the last engine is produced or on December 31 of the calendar year for which the model year is named, whichever date is sooner.

(2) Notwithstanding paragraph (b)(1) of this section, annual production periods beginning prior to September 1, 1996 may not exceed 12 months in length.

(3) Manufacturers who commence an annual production period for a Class II engine family between January 1, 2000 and September 1, 2000 must meet Phase 2 requirements for that family only if that production period will exceed 12 months in length.

(c) Except as provided in paragraph (d) of this section, a certificate of conformity is deemed to cover the engines named in such certificate and produced during the annual production period, as defined in paragraph (b) of this section.

(d) Except as provided in paragraph (e) of this section, the certificate of conformity must be obtained from the Administrator prior to selling, offering for sale, introducing into commerce, or importing into the United States the new engine. Engines produced prior to the effective date of a certificate of conformity may also be covered by the certificate, once it is effective, if the following conditions are met:

(1) The engines conform in all respects to the engines described in the application for the certificate of conformity.

(2) The engines are not sold, offered for sale, introduced into commerce, or delivered for introduction into commerce prior to the effective date of the certificate of conformity.

(3) EPA is notified prior to the beginning of production when such production will start, and EPA is provided a full opportunity to inspect and/or test the engines during and after their production. EPA must have the opportunity to conduct SEA production line testing as if the vehicles had been produced after the effective date of the certificate.

(e) Engines that are certified by EPA prior to January 2, 1996 for model year 1997 may be delivered for introduction into commerce prior to January 2, 1996 once a certificate of conformity has been issued.

(f) Engines imported by an original equipment manufacturer after December 31 of the calendar year for which the model year is named are still covered by the certificate of conformity as long as the production of the engine was completed before December 31 of that year.

[60 FR 34598, July 3, 1995, as amended at 64 FR 15238, Mar. 30, 1999]

§ 90.107 Application for certification.

(a) For each engine family, the engine manufacturer must submit to the Administrator a completed application for a certificate of conformity.

(b) The application must be approved and signed by the authorized representative of the manufacturer.

(c) The application must be updated and corrected by amendment as provided in § 90.122 to accurately reflect the manufacturer's production.

(d) *Required content.* Each application must include the following information:

(1) A description of the basic engine design including, but not limited to, the engine family specifications;

(2) An explanation of how the emission control system operates, including a detailed description of all emission control system components (Detailed component calibrations are not required to be included; they must be provided if requested, however.), each auxiliary emission control device (AECD), and all fuel system components to be installed on any production or test engine(s);

(3) Proposed test engine(s) selection and the rationale for the test engine(s) selection;

(4) Special or alternate test procedures, if applicable;

(5) The service accumulation period necessary to break in the test engine(s) and stabilize emission levels;

(6) A description of all adjustable operating parameters including the following:

(i) The nominal or recommended setting and the associated production tolerances;

(ii) The intended physically adjustable range;

(iii) The limits or stops used to establish adjustable ranges;

(iv) Production tolerances of the limits or stops used to establish each physically adjustable range;

(v) Information relating to why the physical limits or stops used to establish the physically adjustable range of each parameter, or any other means used to inhibit adjustment, are effective in preventing adjustment of parameters to settings outside the manufacturer's intended physically adjustable ranges on in-use engines; and

(vi) Information relating to altitude kits to be certified, including: a description of the altitude kit; appropriate part numbers; the altitude ranges at which the kits must be installed on or removed from the engine for proper emissions and engine performance; statements to be included in the owner's manual for the engine/equipment combination (and other maintenance related literature) that: declare the altitude ranges at which the kit must be installed or removed; and state that the operation of the engine/equipment at an altitude that differs from that at which it was certified, for extended periods of time, may increase emissions; and a statement that an engine with the altitude kit installed will meet each emission standard throughout its useful life (the rationale for this assessment must be documented and retained by the manufacturer, and provided to the Administrator upon request);

(7) The proposed engine information label;

(8) All test data obtained by the manufacturer on each test engine, including CO_2 as specified in § 90.409(c)(1);

(9) A statement that the test engine(s), as described in the manufacturer's application for certification, has been tested in accordance with the applicable test procedures, utilizing the fuels and equipment required under subparts D and E of this part, and that on the basis of such tests the engine(s) conforms to the requirements of this part;

(10) An unconditional statement certifying that all engines in the engine family comply with all requirements of this part and the Clean Air Act;

(11) This paragraph (d)(11) is applicable only to Phase 2 engines.

(i) Engine manufacturers participating in the averaging, banking and trading program as described in subpart C of this part shall declare the applicable Family Emission Limit (FEL) for $HC+NO_X$ ($NMHC+NO_X$).

(ii) Provide the applicable useful life as determined under § 90.105;

(12) A statement indicating whether you expect the engine family to contain only nonroad engines, only stationary engines, or both;

(13) Identification of an agent for service located in the United States. Service on this agent constitutes service on you or any of your officers or employees for any action by EPA or otherwise by the United States related to the requirements of this part; and

(14) For imported engines, identification of the following starting with the 2010 model year:

(i) The port(s) at which the manufacturer has imported engines over the previous 12 months.

(ii) The names and addresses of the agents authorized to import the engines.

(iii) The location of test facilities in the United States where the manufacturer can test engines if EPA selects them for testing under a selective enforcement audit, as specified in subpart F of this part.

(e)(1) In addition to the information specified in paragraph (d) of this section, manufacturers of two-stroke lawnmower engines must submit with their application for a certificate of conformity:

(i) For model year 1997, information establishing the highest number of two-stroke lawnmower engines produced in a single annual production period from 1992 through 1994. This number will be known as the production baseline.

(ii) For model years 1998 through 2002, information documenting the previous year's production and projected production for the current year.

(2) In model year 1997, two-stroke lawnmower engine manufacturers may produce up to 100 percent of their production baseline established under paragraph (e)(1)(i) of this section.

(3) In model year 1998, two-stroke lawnmower engine manufacturers may produce up to 75 percent of their production baseline.

(4) From model years 1999 through 2002, two-stroke lawnmower engine manufacturers may produce up to 50 percent of their production baseline.

(5) In model year 2003, two-stroke lawnmower engine manufacturers must meet class I or II standards specified in § 90.103(a). If in model year 2003 those standards have been superseded by Phase 2 standards, two-stroke lawnmower engine manufacturers must meet the Phase 2 standards that are equivalent to the class I or II standards.

(f) At the Administrator's request, the manufacturer must supply such additional information as may be required to evaluate the application including, but not limited to, projected nonroad engine production.

(g)(1) The Administrator may modify the information submission requirements of paragraph (d) of this section, provided that all of the information specified therein is maintained by the engine manufacturer as required by § 90.121, and amended, updated, or corrected as necessary.

(2) For the purposes of this paragraph, § 90.121(a)(1) includes all information specified in paragraph (d) of this section whether or not such information is actually submitted to the Administrator for any particular model year.

(3) The Administrator may review an engine manufacturer's records at any time. At the Administrator's discretion, this review may take place either at the manufacturer's facility or at another facility designated by the Administrator.

(h)(1) The Administrator may, upon receipt of a written request from an equipment manufacturer, accompanied by sufficient documentation, permit two stroke engines produced for nonhandheld equipment other than lawnmowers to meet the standards specified in § 90.103(a)(3) under the schedule outlined in paragraph (e) of this section. The equipment manufacturer must demonstrate to the satisfaction of the Administrator that:

(i) Four stroke engines for such equipment are not available with suitable physical or performance characteristics; and

(ii) The equipment can not be converted to use four stroke engines without substantial redesign for which additional lead time is necessary to avoid economic hardship.

(2) The Administrator may waive the phase-in percentages of paragraphs (e)(3) and (e)(4) of this section for engines used in low volume nonhandheld equipment other than lawnmowers where the equipment manufacturer demonstrates to the satisfaction of the Administrator that compliance with

the production cap is not economically feasible.

[60 FR 34598, July 3, 1995, as amended at 61 FR 20742, May 8, 1996; 62 FR 42643, Aug. 7, 1997; 64 FR 15238, Mar. 30, 1999; 65 FR 24307, Apr. 25, 2000; 73 FR 3612, Jan. 18, 2008; 73 FR 59180, Oct. 8, 2008; 74 FR 56374, Oct. 30, 2009]

§ 90.108 Certification.

(a) If, after a review of the manufacturer's submitted application, information obtained from any inspection, and such other information as the Administrator may require, the Administrator determines that the application is complete and that the engine family meets the requirements of this part and the Clean Air Act, the Administrator shall issue a certificate of conformity.

(b) The Administrator shall give a written explanation when certification is denied. The manufacturer may request a hearing on a denial. (See § 90.124 for procedure.)

(c) For certificates issued for engine families included in the averaging, banking and trading program as described in subpart C of this part:

(1) Failure to comply with all applicable averaging, banking and trading provisions in this part will be considered to be a failure to comply with the terms and conditions upon which the certificate was issued, and the certificate may be determined to be void *ab initio*.

(2) The manufacturer shall bear the burden of establishing to the satisfaction of the Administrator that the conditions upon which the certificate was granted were satisfied or waived.

(d) The Administrator may, upon request by a manufacturer, waive any requirement of this part otherwise necessary for the issuance of a certificate. The Administrator may set such conditions in a certificate as he or she deems appropriate to assure that the waived requirements are either satisfied or are demonstrated, for the subject engines, to be inappropriate, irrelevant or met by the application of a different requirement under this chapter. The Administrator may indicate on such conditional certificates that failure to meet these conditions may result in suspension or revocation or the voiding *ab initio* of the certificate.

[60 FR 34598, July 3, 1995, as amended at 64 FR 15238, Mar. 30, 1999]

§ 90.109 Requirement of certification—closed crankcase.

(a) An engine's crankcase must be closed.

(b) For purposes of this section, ''crankcase'' means the housing for the crankshaft and other related internal parts.

(c) Notwithstanding paragraph (a) of this section, the Administrator will allow open crankcases for engines used exclusively to power snowthrowers based upon a manufacturer's demonstration that all applicable emission standards will be met by the engine for the combination of emissions from the crankcase, and exhaust emissions measured using the procedures in subpart E of this part. This demonstration may be made based upon best engineering judgment. Upon request of the Administrator, the manufacturer must provide an explanation of any procedure or methodology used to determine that the total CO emissions from the crankcase and the exhaust are below the applicable standard for CO.

[60 FR 34598, July 3, 1995, as amended at 61 FR 58301, Nov. 13, 1996]

§ 90.110 Requirement of certification—prohibited controls.

(a) An engine may not be equipped with an emission control device, system, or element of design for the purpose of complying with emission standards if such device, system, or element of design will cause or contribute to an unreasonable risk to public health, welfare, or safety in its operation or function.

(b) You may not design your engines with emission-control devices, systems, or elements of design that cause or contribute to an unreasonable risk to public health, welfare, or safety while operating. For example, this would apply if the engine emits a noxious or toxic substance it would otherwise not emit that contributes to such an unreasonable risk.

[60 FR 34598, July 3, 1995, as amended at 67 FR 68340, Nov. 8, 2002]

§ 90.111 Requirement of certification—prohibition of defeat devices.

(a) An engine may not be equipped with a defeat device.

(b) For purposes of this section, ''defeat device'' means any device, system, or element of design which senses operation outside normal emission test conditions and reduces emission control effectiveness.

(1) Defeat device includes any auxiliary emission control device (AECD) that reduces the effectiveness of the emission control system under conditions which may reasonably be expected to be encountered in normal operation and use unless such conditions are included in the test procedure.

(2) Defeat device does not include such items which either operate only during engine starting or are necessary to protect the engine (or vehicle in which it is installed) against damage or accident during its operation.

§ 90.112 Requirement of certification—adjustable parameters.

(a) Engines equipped with adjustable parameters must comply with all requirements of this subpart for any specification within the physically available range.

(b) An operating parameter is not considered adjustable if it is permanently sealed by the manufacturer or otherwise not normally accessible using ordinary tools.

(c) The Administrator may require that adjustable parameters be set to any specification within the adjustable range during certification or a selective enforcement audit to determine compliance with the requirements of this subpart.

§ 90.113 In-use testing program for Phase 1 engines.

(a) This section applies only to Phase 1 engines. In-use testing provisions for Phase 2 engines are found in subpart M of this part. At the time of certification the engine manufacturer may propose which engine families should be included in an in-use test program. EPA will approve a manufacturer's test program if the selected engine families represent an adequate consideration of the elements listed in paragraphs (b) and (c) of this section.

(b) *Number of engines to be tested.* The number of engines to be tested by a manufacturer is determined by the following method:

(1) For an engine manufacturer with total projected annual production of more than 75,000 engines destined for the United States market for that model year, the minimum number of engines to be tested may be the lowest of the numbers determined in paragraph (b)(1)(i), (ii) or (iii) of this section:

(i) Divide the manufacturer's total projected annual production of small SI engines destined for the United States market for that model year by 50,000, and round to the nearest whole number;

(ii) Test five engines each from 25 percent of all engine families certified in that model year; and

(iii) Test three engines each from 50 percent of all engine families certified in that model year.

(2) An engine manufacturer with total projected annual production of 75,000 engines or less destined for the United States market for that model year may test a minimum of two engines.

(c) *Criteria for selecting test engines.* An engine manufacturer may select test engines from engine families utilizing the following criteria and in the order specified:

(1) Engine families using emission control technology which most likely will be used on Phase 2 engines;

(2) Engine families using aftertreatment;

(3) Engine families certified to different emission standards;

(4) Different engine designs (such as sidevalve head versus overhead valve engines);

(5) Engine families using emission control technology specifically installed to achieve compliance with emission standards of this part;

(6) The engine family with the highest projected annual sales; and

(7) Engine families which meet the above criteria, but have not been included in prior model year in-use testing programs as required by these provisions.

(d) *Collection of in-use engines.* An engine manufacturer may procure in-use

engines which have been operated for between half and three-quarters of the engine's advertised (or projected) useful life. All testing may be completed within three years from the date the certificate is first issued for an engine family undergoing in-use testing.

(1) Test engines may be procured from sources not associated with the engine manufacturer or vehicle manufacturer, except that with prior approval of the Administrator, an engine manufacturer with annual sales of less than 50,000 engines may obtain in-use engines associated with itself or its vehicle manufacturer.

(2) A test engine should have a maintenance history representative of actual in-use conditions.

(i) A manufacturer may question the end user regarding the accumulated usage, maintenance, operating conditions, and storage of the test engines.

(ii) Documents used in the procurement process may be maintained as required in § 90.121.

(3) *Maintenance and testing of test engines.* (i) The manufacturer may perform minimal set-to-spec maintenance on a test engine. Maintenance may include only that which is listed in the owner's instructions for engines with the amount of service and age of the acquired test engine.

(ii) Documentation of all maintenance and adjustments may be maintained and retained as required by § 90.121.

(4) One valid emission test may be conducted for each in-use engine.

(5) If a selected in-use engine fails to comply with any applicable certification emission standard, the manufacturer may determine the reason for noncompliance. The manufacturer may report all determinations for noncompliance in its annual in-use test result report as described below.

(e) *In-use test program reporting.* The manufacturer may submit to the Administrator by January 30 of each calendar year all emission testing results generated from in-use testing. The following information may be reported for each test engine:

(1) Engine family;

(2) Model;

(3) Engine serial number;

(4) Date of manufacture;

(5) Estimated hours of use;

(6) Results of all emission testing;

(7) Summary of all maintenance and/or adjustments performed;

(8) Summary of all modifications and/or repairs; and

(9) Determinations of compliance and/or noncompliance.

(f) The Administrator may approve and/or suggest modifications to a manufacturer's in-use testing program.

[60 FR 34598, July 3, 1995, as amended at 64 FR 15239, Mar. 30, 1999]

§ 90.114 Requirement of certification—engine information label.

(a) The engine manufacturer must affix at the time of manufacture a permanent and legible label identifying each nonroad engine. The label must meet the following requirements:

(1) Be attached in such a manner that it cannot be removed without destroying or defacing the label;

(2) Be durable and readable for the entire engine life;

(3) Be secured to an engine part necessary for normal engine operation and not normally requiring replacement during engine life;

(4) Be written in English; and

(5) Be located so as to be readily visible to the average person after the engine is installed in the vehicle.

(b) If the nonroad vehicle obscures the label on the engine, the nonroad vehicle manufacturer must attach a supplemental label so that this label is readily visible to the average person. The supplemental label must:

(1) Be attached in such a manner that it cannot be removed without destroying or defacing the label;

(2) Be secured to a vehicle part necessary for normal operation and not normally requiring replacement during the vehicle life; and

(3) Be identical in content to the label which was obscured.

(c) The label must contain the following information:

(1) The heading ''Important Engine Information;''

(2) The full corporate name and trademark of the engine manufacturer;

(3) The statement, ''This (specify vehicle or engine, as applicable) is certified to operate on (specify operating fuel(s));''

(4) Identification of the Exhaust Emission Control System (Abbreviations may be used and must conform to the nomenclature and abbreviations provided in the Society of Automotive Engineers procedure J1930, ''Electrical/Electronic Systems Diagnostic Terms, Definitions, Abbreviations and Acronyms,'' September 1991. This procedure has been incorporated by reference. See § 90.7.);

(5) All engine lubricant requirements;

(6) Date of engine manufacture [day (optional), month and year];

(7) The statement ''THIS ENGINE CONFORMS TO U.S. EPA REGS FOR [MODEL YEAR].'';

(8) EPA standardized engine family designation;

(9) Engine displacement [in cubic centimeters];

(10) Other information concerning proper maintenance and use or indicating compliance or noncompliance with other standards may be indicated on the label;

(11) For Phase 2 engines, the useful life category as determined by the manufacturer pursuant to § 90.105. Such useful life category shall be shown by one of the following statements to be appended to the statement required under paragraph (c)(7) of this section:

(i) ''EMISSIONS COMPLIANCE PERIOD: [useful life] HOURS''; or

(ii) ''EMISSIONS COMPLIANCE PERIOD: CATEGORY [fill in C, B or A as indicated and appropriate from the tables in § 90.105], REFER TO OWNER'S MANUAL FOR FURTHER INFORMATION'';

(d) If there is insufficient space on the engine (or on the vehicle where a supplemental label is required under paragraph (b) of this section) to accommodate a label including all the information required in paragraph (c) of this section, the manufacturer may delete or alter the label as indicated in this paragraph. The information deleted from the label must appear in the owner's manual.

(1) Exclude the information required in paragraphs (c)(3), (4), and (5) of this section. The fuel or lubricant may be specified elsewhere on the engine.

(2) Exclude the information required by paragraph (c)(6) of this section, if the date the engine was manufactured is stamped on the engine.

(e) The Administrator may, upon request, waive or modify the label content requirements of paragraphs (c) and (d) of this section, provided that the intent of such requirements is met.

(f) Manufacturers electing to use the labeling language of paragraph (c)(11)(ii) of this section must provide in the documents intended to be conveyed to the ultimate purchaser, the statement:

(1) For nonhandheld engines: The Emissions Compliance Period referred to on the Emissions Compliance label indicates the number of operating hours for which the engine has been shown to meet Federal emission requirements. For engines less than 66 cc, Category C=50 hours, B=125 hours, and A=300 hours. For engines equal to or greater than 66 cc but less than 225 cc displacement, Category C=125 hours, B=250 hours, and A=500 hours. For engines of 225 cc or more, Category C=250 hours, B=500 hours, and A=1000 hours.

(2) For handheld engines: The Emissions Compliance Period referred to on the Emissions Compliance label indicates the number of operating hours for which the engine has been shown to meet Federal emission requirements. Category C=50 hours, B=125 hours, and A=300 hours.

(3) The manufacturer must provide, in the same document as the statement in paragraph (f)(1) or (f)(2) of this section, a statement of the engine's displacement or an explanation of how to readily determine the engine's displacement. The Administrator may approve alternate language to the statement in paragraph (f)(1) or (f)(2) of this section, provided that the alternate language provides the ultimate purchaser with a clear description of the number of hours represented by each of the three letter categories for the subject engine's displacement.

(g) Manufacturers may add appropriate features to prevent counterfeit labels. For example, manufacturers may include the engine's unique identification number on the label.

[60 FR 34598, July 3, 1995, as amended at 64 FR 15239, Mar. 30, 1999; 65 FR 24307, Apr. 25, 2000; 73 FR 3613, Jan. 18, 2008; 73 FR 59180, Oct. 8, 2008]

§ 90.115 Requirement of certification—supplying production engines upon request.

Upon the Administrator's request, the manufacturer must supply a reasonable number of production engines for testing and evaluation. These engines must be representative of typical production and supplied for testing at such time and place and for such reasonable periods as the Administrator may require.

§ 90.116 Certification procedure—determining engine displacement, engine class, and engine families.

(a) Engine displacement must be calculated using nominal engine values and rounded to the nearest whole cubic centimeter in accordance with ASTM E29–93a. This procedure has been incorporated by reference. See § 90.7.

(1) Class I-A—nonhandheld equipment engines less than 66 cc in displacement;

(2) Class I-B—nonhandheld equipment engines greater than or equal to 66 cc but less than 100 cc in displacement;

(3) Class I—nonhandheld equipment engines greater than or equal to 100 cc but less than 225 cc in displacement;

(4) Class II—nonhandheld equipment engines greater than or equal to 225 cc in displacement;

(5) Class III—handheld equipment engines less than 20 cc in displacement,

(6) Class IV—handheld equipment engines equal or greater than 20 cc but less than 50 cc in displacement, and

(7) Class V—handheld equipment engines equal to or greater than 50 cc in displacement.

(c) The manufacturer's product line will be divided into groupings of engine families as specified by paragraph (d) of this section.

(d) To be classed in the same engine family, engines must be identical in all of the following applicable respects:

(1) The combustion cycle;

(2) The cooling mechanism;

(3) The cylinder configuration (inline, vee, opposed, bore spacings, and so forth);

(4) The number of cylinders;

(5) The engine class. Engines of different displacements that are within 15 percent of the largest displacement may be included within the same engine family as long as all the engines are in the same class;

(6) The location of valves, where applicable, with respect to the cylinder (e.g. side valves or overhead valves);

(7) The number of catalytic converters, location, volume and composition;

(8) The thermal reactor characteristics;

(9) The fuel required (e.g. gasoline, natural gas, LPG); and

(10) The useful life category.

(e) At the manufacturer's option, engines identical in all the respects listed in paragraph (d) of this section may be further divided into different engine families if the Administrator determines that they may be expected to have different emission characteristics. This determination is based upon the consideration of features such as:

(1) [Reserved]

(2) The combustion chamber configuration;

(3) The intake and exhaust timing method of actuation (poppet valve, reed valve, rotary valve, and so forth);

(4) The intake and exhaust valve or port sizes, as applicable;

(5) The fuel system;

(6) The exhaust system; and

(7) The method of air aspiration.

(f) Where engines are of a type which cannot be divided into engine families based upon the criteria listed in paragraph (d) of this section, the Administrator will establish families for those engines based upon the features most related to their emission characteristics.

[60 FR 34598, July 3, 1995, as amended at 64 FR 15239, Mar. 30, 1999; 65 FR 24308, Apr. 25, 2000; 73 FR 59180, Oct. 8, 2008]

§ 90.117 Certification procedure—test engine selection.

(a) For Phase 1 engines, the manufacturer must select, from each engine family, a test engine that the manufacturer determines to be most likely to exceed the emission standard. For Phase 2 engines, the manufacturer must select, from each engine family, a test engine of a configuration that the manufacturer determines to be most likely to exceed the $HC+NO_X$ ($NMHC+NO_X$) Family Emission Limit

(FEL), or HC+NO_X (NMHC+NO_X) standard if no FEL is applicable.

(b) The test engine must be constructed to be representative of production engines.

[60 FR 34598, July 3, 1995, as amended at 64 FR 15239, Mar. 30, 1999]

§ 90.118 Certification procedure—service accumulation and usage of deterioration factors.

(a)(1) The test engine must be operated with all emission control systems operating properly for a period sufficient to stabilize emissions.

(2) The period sufficient to stabilize emissions may not exceed 12 hours.

(b) No maintenance, other than recommended lubrication and filter changes, may be performed during service accumulation without the Administrator's approval.

(c) Service accumulation is to be performed in a manner using good engineering judgment to ensure that emissions are representative of production engines.

(d) The manufacturer must maintain, and provide to the Administrator if requested, records stating the rationale for selecting a service accumulation period less than 12 hours and records describing the method used to accumulate hours on the test engine(s).

(e) For purposes of establishing whether Phase 2 engines comply with applicable exhaust emission standards or FELs, the test results for each regulated pollutant as measured pursuant to § 90.119 shall be multiplied by the applicable df determined under § 90.104 (g) or (h). The product of the two numbers shall be rounded to the same number of decimal places contained in the applicable standard, and compared against the applicable standard or FEL, as appropriate.

[60 FR 34598, July 3, 1995, as amended at 61 FR 20742, May 8, 1996; 64 FR 15239, Mar. 30, 1999]

§ 90.119 Certification procedure—testing.

(a) *Manufacturer testing.* The manufacturer must test the test engine using the specified test procedures and appropriate test cycle. All test results must be reported to the Administrator.

(1) The test procedure to be used is detailed in Subpart E of this part.

(i) Class I and II engines must use the test cycle that is appropriate for their application. Engines that operate only at intermediate speed must use Test Cycle A, which is described in table 2 of appendix A to subpart E of this part. Engines that operate only at rated speed must use Test Cycle B, which is described in table 2 of appendix A to subpart E of this part. If an engine family includes engines used in both rated-speed and intermediate-speed applications, the manufacturer must select the duty cycle that will result in worst-case emission results for certification. For any testing after certification, the engine must be tested using the most appropriate test cycle based on the engine's installed governor.

(ii) Class I-A, III, IV, and V engines must use Test Cycle C described in subpart E of this part.

(2) Emission test equipment provisions are described in subpart D of this part.

(b) *Administrator testing.* (1) The Administrator may require that any one or more of the test engines be submitted to the Administrator, at such place or places as the Administrator may designate, for the purposes of conducting emission tests. The Administrator may specify that testing will be conducted at the manufacturer's facility, in which case instrumentation and equipment specified by the Administrator must be made available by the manufacturer for test operations. Any testing conducted at a manufacturer's facility must be scheduled by the manufacturer as promptly as possible.

(2)(i) Whenever the Administrator conducts a test on a test engine, the results of that test will, unless subsequently invalidated by the Administrator, comprise the official data for the engine and the manufacturer's data will not be used in determining compliance with emission standards.

(ii) Prior to the performance of such test, the Administrator may adjust or cause to be adjusted any adjustable parameter of the test engine which the Administrator has determined to be subject to adjustment for certification

testing, to any setting within the physically adjustable range of that parameter, to determine whether such engine conforms to applicable emission standards.

(iii) For those engine parameters which the Administrator has not determined to be subject to adjustment for certification testing, the test engine presented to the Administrator for testing will be calibrated within the production tolerances applicable to the manufacturer specification shown on the engine label or in the owner's manual, as specified in the application for certification.

(c) *Use of carryover test data.* In lieu of testing, the manufacturer may submit, with the Administrator's approval, emission test data used to certify substantially similar engine families in previous years. This ''carryover'' test data is only allowable if the data shows the test engine would fully comply with the emission standards for the applicable class.

(d) *Scheduled maintenance during testing.* No scheduled maintenance may be performed during testing of the engine.

(e) *Unscheduled maintenance on test engines.* (1) Manufacturers may not perform any unscheduled engine, emission control system, or fuel system adjustment, repair, removal, disassembly, cleaning, or replacement on a test engine without the advance approval of the Administrator.

(2) The Administrator may approve unscheduled maintenance if:

(i) A preliminary determination has been made that a part failure or system malfunction, or the repair of such failure or malfunction, does not render the engine unrepresentative of engines in use, and does not require direct access to the combustion chamber; and

(ii) A determination has been made that the need for maintenance or repairs is indicated by an overt malfunction such as persistent misfire, engine stall, overheating, fluid leakage, or loss of oil pressure.

(3) Emission measurements may not be used as a means of determining the need for unscheduled maintenance under paragraph (e)(2) of this section.

(4) The Administrator must have the opportunity to verify the extent of any overt indication of part failure (for example, misfire, stall), or an activation of an audible and/or visual signal, prior to the manufacturer performing any maintenance related to such overt indication or signal.

(5) Unless approved by the Administrator prior to use, engine manufacturers may not use any equipment, instruments, or tools to identify malfunctioning, maladjusted, or defective engine components unless the same or equivalent equipment, instruments, or tools are available at dealerships and other service outlets and are used in conjunction with scheduled maintenance on such components.

(6) If the Administrator determines that part failure or system malfunction occurrence and/or repair rendered the engine unrepresentative of production engines, the engine cannot be used as a test engine.

(7) Unless waived by the Administrator, complete emission tests are required before and after any engine maintenance which may reasonably be expected to affect emissions.

(f) *Engine failure.* A manufacturer may not use as a test engine any engine which incurs major mechanical failure necessitating disassembly of the engine. This prohibition does not apply to failures which occur after completion of the service accumulation period.

[60 FR 34598, July 3, 1995, as amended at 65 FR 24308, Apr. 25, 2000; 70 FR 40448, July 13, 2005]

§ 90.120 Certification procedure—use of special test procedures.

(a) *Use of special test procedures by EPA.* The Administrator may establish special test procedures for any engine that the Administrator determines is not susceptible to satisfactory testing under the specified test procedures set forth in subpart E of this part.

(b)(1) *Use of alternate test procedures by an engine manufacturer.* A manufacturer may elect to use an alternate test procedure provided that it yields results equal to the results from the specified test procedure in subpart E, its use is approved in advance by the Administrator, and the basis for equivalent results with the specified test procedure is fully described in the manufacturer's application.

(2) An engine manufacturer electing to use alternate test procedures is solely responsible for the results obtained. The Administrator may reject data generated under test procedures which do not correlate with data generated under the specified procedures.

(3) A manufacturer may elect to use the test procedures in 40 CFR part 1065 as an alternate test procedure without getting advance approval by the Administrator or meeting the other conditions of paragraph (b)(1) of this section. The manufacturer must identify in its application for certification that the engines were tested using the procedures in 40 CFR part 1065. For any EPA testing with Phase 1 or Phase 2 engines, EPA will use the manufacturer's selected procedures for mapping engines, generating duty cycles, and applying cycle-validation criteria. For any other parameters, EPA may conduct testing using either of the specified procedures.

(4) Where we specify mandatory compliance with the procedures of 40 CFR part 1065, manufacturers may elect to use the procedures specified in 40 CFR part 86, subpart N, as an alternate test procedure without advance approval by the Administrator.

(c) Optional procedures approved during Phase 1 can be carried over to Phase 2, following advance approval by the Administrator, to the extent the alternate procedure continues to yield results equal to the results from the specified test procedures in subpart E of this part.

[60 FR 34598, July 3, 1995, as amended at 64 FR 15239, Mar. 30, 1999; 70 FR 40448, July 13, 2005; 73 FR 59180, Oct. 8, 2008]

§ 90.121 Certification procedure—recordkeeping.

(a) The engine manufacturer must maintain the following adequately organized records:

(1) Copies of all applications filed with the Administrator;

(2) A copy of all data obtained through the in-use testing program; and

(3) A detailed history of each test engine used for certification including the following:

(i) A description of the test engine's construction, including a general description of the origin and buildup of the engine, steps taken to insure that it is representative of production engines, description of components specially built for the test engine, and the origin and description of all emission-related components;

(ii) A description of the method used for engine service accumulation, including date(s) and the number of hours accumulated;

(iii) A description of all maintenance, including modifications, parts changes, and other servicing performed, and the date(s), and reason(s) for such maintenance;

(iv) A description of all emission tests performed including routine and standard test documentation, as specified in subpart E of this part, date(s), and the purpose of each test;

(v) A description of all tests performed to diagnose engine or emission control performance, giving the date and time of each and the reason(s) for the test; and

(vi) A description of any significant event(s) affecting the engine during the period covered by the history of the test engine but not described by an entry under one of the previous paragraphs of this section.

(b) Routine emission test data, such as those reporting test cell temperature and relative humidity at start and finish of test and raw emission results from each mode or test phase, must be retained for a period of one year after issuance of all certificates of conformity to which they relate. All other information specified in paragraph (a) of this section must be retained for a period of eight years after issuance of all certificates of conformity to which they relate.

(c) Records may be kept in any format and on any media, provided that, at the Administrator's request, organized, written records in English are promptly supplied by the manufacturer.

(d) The manufacturer must supply, at the Administrator's request, copies of any engine maintenance instructions or explanations issued by the manufacturer.

§ 90.122 Amending the application and certificate of conformity.

(a) The engine manufacturer must notify the Administrator when either an engine is to be added to a certificate of conformity, an FEL is to be changed, or changes are to be made to a product line covered by a certificate of conformity. Notification occurs when the manufacturer submits an amendment to the original application prior to either producing such engines or making such changes to a product line.

(b) The amendment must request that the engine manufacturer's existing certificate of conformity be amended and include the following information:

(1) A full description of the engine to be added or the change(s) to be made in production;

(2) The manufacturer's proposed test engine selection(s); and

(3) Engineering evaluations or reasons why the original test engine is or is not still appropriate.

(c) The Administrator may require the engine manufacturer to perform tests on an engine representing the engine to be added or changed.

(d) *Decision by Administrator*. (1) Based on the submitted amendment and data derived from such testing as the Administrator may require or conduct, the Administrator must determine whether the proposed addition or change would still be covered by the certificate of conformity then in effect.

(2) If the Administrator determines that the new or changed engine(s) meets the requirements of this subpart and the Act, the appropriate certificate of conformity will be amended.

(3) If the Administrator determines that the proposed amendment would not be covered by the certificate of conformity, the Administrator must provide a written explanation to the engine manufacturer of his or her decision not to amend the certificate. The manufacturer may request a hearing on a denial.

(4) If the Administrator determines that a revised FEL meets the requirements of this subpart and the Act, the appropriate certificate of conformity will be amended, or a new certificate will be issued to reflect the revised FEL. The certificate of conformity is revised conditional upon compliance with § 90.207(b).

(e)(1) Alternatively, an engine manufacturer may make changes in or additions to production engines concurrently with amending the application for an engine family as set forth in paragraph (a) and (b) of this section. In these circumstances the manufacturer may implement the production change without EPA pre-approval provided the request for change together with all supporting emission test data, related engineering evaluations, and other supporting documentation is received at EPA within three working days of implementing the change. Such changes are ultimately still subject to the provisions of paragraphs (c) and (d) of this section.

(2) If, after a review, the Administrator determines that additional testing or information is required, the engine manufacturer must provide required test data or information within 30 days or cease production of the affected engines.

(3) If the Administrator determines that the affected engines do not meet applicable requirements, the Administrator will notify the engine manufacturer to cease production of the affected engines.

[60 FR 34598, July 3, 1995, as amended at 64 FR 15239, Mar. 30, 1999; 69 FR 1833, Jan. 12, 2004]

§ 90.123 Denial, revocation of certificate of conformity.

(a) If, after review of the engine manufacturer's application, request for certification, information obtained from any inspection, and any other information the Administrator may require, the Administrator determines that the test engine does not meet applicable standards and requirements, the Administrator will notify the manufacturer in writing, setting forth the basis for this determination.

(b) Notwithstanding the fact that engines described in the application may comply with all other requirements of this subpart, the Administrator may deny the issuance of or revoke a previously issued certificate of conformity if the Administrator finds any one of

the following infractions to be substantial:

(1) The engine manufacturer submits false or incomplete information;

(2) The engine manufacturer denies an EPA enforcement officer or EPA authorized representative the opportunity to conduct authorized inspections;

(3) The engine manufacturer fails to supply requested information or amend its application to include all engines being produced;

(4) The engine manufacturer renders inaccurate any test data which it submits or otherwise circumvents the intent of the Act or this part; or

(5) The engine manufacturer denies an EPA enforcement officer or EPA authorized representative reasonable assistance (as defined in § 90.506).

(c) If a manufacturer knowingly commits an infraction specified in paragraph (b)(1) or (b)(4) of this section or knowingly commits any fraudulent act which results in the issuance of a certificate of conformity, the Administrator may deem such certificate void ab initio.

(d) When the Administrator denies or revokes a certificate of conformity, the engine manufacturer will be provided a written determination. The manufacturer may request a hearing on the Administrator's decision.

(e) Any revocation of a certificate of conformity extends no further than to forbid the introduction into commerce of those engines previously covered by the certification which are still in the possession of the engine manufacturer, except in cases of such fraud or other misconduct that makes the certification void ab initio.

§ 90.124 Request for hearing.

(a) An engine manufacturer may request a hearing on the Administrator's denial or revocation of a certificate of conformity.

(b) The engine manufacturer's request must be filed within 30 days of the Administrator's decision, be in writing, and set forth the manufacturer's objections to the Administrator's decision and data to support the objections.

(c) If, after review of the request and supporting data, the Administrator finds that the request raises a substantial and factual issue, the Administrator will provide the engine manufacturer a hearing.

§ 90.125 Hearing procedures.

The hearing procedures set forth in §§ 90.513, 90.514, and 90.515 apply to this subpart.

§ 90.126 Right of entry and access.

Any engine manufacturer that has applied for certification of a new engine or engine family subject to certification testing under this subpart must admit or cause to be admitted to any applicable facilities during operating hours any EPA enforcement officer or EPA authorized representative as provided in § 90.506.

§ 90.127 Fuel line permeation from nonhandheld engines and equipment.

The following permeation standards apply to new nonhandheld engines and equipment with respect to fuel lines:

(a) *Emission standards and related requirements.* New nonhandheld engines and equipment with a date of manufacture of January 1, 2009 or later that run on a volatile liquid fuel (such as gasoline) must meet the emission standards specified in paragraph (a)(1) or (a)(2) of this section as follows:

(1) New nonhandheld engines and equipment must use only fuel lines that meet a permeation emission standard of 15 $g/m^2/day$ when measured according to the test procedure described in 40 CFR 1060.515.

(2) Alternatively, new nonhandheld engines and equipment must use only fuel lines that meet standards that apply for these engines and equipment in California for the same model year (see 40 CFR 1060.810). This may involve SHED-based measurements for equipment or testing with fuel lines alone. If this involves SHED-based measurements, all elements of the emission control system must remain in place for fully assembled engines and equipment.

(3) The emission standards in this section apply with respect to discrete fuel line segments of any length. Compliance may also be demonstrated using aggregated systems that include

multiple sections of fuel line with connectors, and fittings. The standard applies with respect to the total permeation emissions divided by the wetted internal surface area of the assembly. Where it is not practical to determine the wetted internal surface area of the assembly, the internal surface area per unit length of the assembly may be assumed to be equal to the ratio of internal surface area per unit length of the hose section of the assembly.

(4) The emission standards in this section apply over a useful life of five years.

(5) Starting with the 2010 model year, fuel lines must be labeled in a permanent and legible manner with one of the following approaches:

(i) By meeting the labeling requirements that apply for these engines and equipment in California.

(ii) By identifying the certificate holder's corporate name or trademark, or the fuel line manufacturer's corporate name or trademark, and the fuel line's permeation level. For example, the fuel line may identify the emission standard from this section, the applicable SAE classification, or the family number identifying compliance with California standards. A continuous stripe or other pattern may be added to help identify the particular type or grade of fuel line.

(6) The requirements of this section do not apply to auxiliary marine engines.

(b) *Certification requirements.* Fuel lines subject to the requirements in this section must be covered by a certificate of conformity. Fuel line manufacturers or equipment manufacturers may apply for certification. Certification under this section must be based on emission data using the appropriate procedures that demonstrate compliance with the standard, including any of the following:

(1) Emission data demonstrating compliance with fuel line permeation requirements for model year 2008 equipment sold in California. You may satisfy this requirement by presenting an approved Executive Order from the California Air Resources Board showing that the fuel lines meet the applicable standards in California. This may include an Executive Order from the previous model year if a new certification is pending.

(2) Emission data demonstrating a level of permeation control that meets any of the following industry standards:

(i) R11A specifications in SAE J30 as described in 40 CFR 1060.810.

(ii) R12 specifications in SAE J30 as described in 40 CFR 1060.810.

(iii) Category 1 specifications in SAE J2260 as described in 40 CFR 1060.810.

(iv) Emission data demonstrating compliance with the fuel line permeation standards in 40 CFR 1051.110.

(c) *Prohibitions.* (1) Except as specified in paragraph (c)(2) of this section, introducing engines or equipment into U.S. commerce without meeting all the requirements of this section violates § 90.1003(a)(1).

(2) It is not a violation to introduce your engines into U.S. commerce if equipment manufacturers add fuel lines when installing your engines in their equipment. However, you must give equipment manufacturers any appropriate instructions so that fully assembled equipment will meet all the requirements in this section, as described in § 90.128.

[73 FR 59180, Oct. 8, 2008]

§ 90.128 Installation instructions.

(a) If you sell an engine for someone else to install in a piece of nonroad equipment, give the engine installer instructions for installing it consistent with the requirements of this part. Include all information necessary to ensure that an engine will be installed in its certified configuration. In particular, describe the steps needed to control evaporative emissions, as described in § 90.127. This may include information related to the delayed requirements for small-volume equipment manufacturers.

(b) You do not need installation instructions for engines you install in your own equipment.

(c) Provide instructions in writing or in an equivalent format. For example, you may post instructions on a publicly available Web site for downloading or printing. If you do not provide the instructions in writing, explain in your application for certification how you will ensure that each

installer is informed of the installation requirements.

(d) Equipment manufacturers failing to follow the engine manufacturer's emission-related installation instructions will be considered in violation of § 90.1003.

[73 FR 59181, Oct. 8, 2008]

§ 90.129 Fuel tank permeation from handheld engines and equipment.

The permeation standards of this section apply to certain new handheld engines and equipment with respect to fuel tanks. For the purposes of this section, fuel tanks do not include fuel caps.

(a) Emission standards and related requirements. (1) New handheld engines and equipment with a date of manufacture of January 1, 2009 or later that run on a volatile liquid fuel (such as gasoline) and have been certified to meet applicable fuel tank permeation standards in California must meet one of the following emission standards:

(i) Engines and equipment must use only fuel tanks that meet a permeation emission standard of 2.0 g/m2/day when measured according to the applicable test procedure specified by the California Air Resources Board.

(ii) Engines and equipment must use only fuel tanks that meet the fuel tank permeation standards in 40 CFR 1060.103.

(iii) Engines and equipment must use only fuel tanks that meet standards that apply for these engines in California for the same model year. This may involve SHED-based measurements for equipment or testing with fuel tanks alone. If this involves SHED-based measurements, all elements of the emission-control system must remain in place for fully assembled engines and equipment.

(2) Engine and equipment manufacturers may generate or use emission credits to show compliance with the requirements of this section under the averaging program as described in 40 CFR part 1054, subpart H.

(3) The emission standards in this section apply over a useful life of two years.

(4) Equipment must be labeled in a permanent and legible manner with one of the following approaches:

(i) By meeting the labeling requirements that apply for equipment in California.

(ii) By identifying the certificate holder's corporate name or trademark, or the fuel tank manufacturer's corporate name or trademark. Also include the family number identifying compliance with California standards or state: ''THIS FUEL TANK COMPLIES WITH U.S. EPA STANDARDS.'' This label may be applied to the fuel tank or it may be combined with the emission control information label required in § 90.114. If the label information is not on the fuel tank, the label must include a part identification number that is also permanently applied to the fuel tank.

(5) The requirements of this section do not apply to engines or equipment with structurally integrated nylon fuel tanks (as defined in 40 CFR 1054.801).

(b) *Certification requirements.* Fuel tanks subject to the requirements in this section must be covered by a certificate of conformity. Fuel tank manufacturers or equipment manufacturers may apply for certification. Certification under this section must be based on emission data using the appropriate procedures that demonstrate compliance with the standard. You may satisfy this requirement by presenting an approved Executive Order from the California Air Resources Board showing that the fuel tanks meet the applicable standards in California. This may include an Executive Order from the previous model year for cases where new certification based on carryover of emission data from the previous model year is pending.

(c) *Prohibitions.* Introducing equipment into U.S. commerce without meeting all the requirements of this section violates § 90.1003(a)(1).

[73 FR 59181, Oct. 8, 2008]

Subpart C—Certification Averaging, Banking, and Trading Provisions

SOURCE: 64 FR 15239, Mar. 30, 1999, unless otherwise noted.

§ 90.201 Applicability.

(a) The requirements of this subpart C are applicable to all Phase 2 spark-ignition engines subject to the provisions of subpart A of this part except as provided in § 90.103(a). These provisions are not applicable to any Phase 1 engines. Participation in the averaging, banking and trading program is voluntary, but if a manufacturer elects to participate, it must do so in compliance with the regulations set forth in this subpart. The provisions of this subpart are applicable for $HC+NO_X$ ($NMHC+NO_X$) emissions but not for CO emissions.

(b) See 40 CFR 1054.740 for special provisions for using emission credits generated under this part 90 from Phase 2 engines to demonstrate compliance with engines certified under 40 CFR part 1054.

(c) To the extent specified in 40 CFR part 60, subpart JJJJ, stationary engines certified under this part and subject to the standards of 40 CFR part 60, subpart JJJJ, may participate in the averaging, banking and trading program described in this subpart.

[73 FR 59181, Oct. 8, 2008]

§ 90.202 Definitions.

The definitions in subpart A of this part apply to this subpart. The following definitions also apply to this subpart:

Averaging means the exchange of emission credits between engine families within a given manufacturer's product line.

Banking means the retention of emission credits by the manufacturer generating the emission credits or obtaining such credits through trading, for use in future model year averaging or trading as permitted in this part.

Emission credits represent the amount of emission reduction or exceedance, by an engine family, below or above the applicable $HC+NO_X$ ($NMHC+NO_X$) emission standard, respectively. FELs below the standard create ''positive credits,'' while FELs above the standard create ''negative credits.'' In addition, ''projected credits'' refer to emission credits based on the projected applicable production volume of the engine family. ''Reserved credits'' are emission credits generated within a model year waiting to be reported to EPA at the end of the model year. ''Actual credits'' refer to emission credits based on actual applicable production volume as contained in the end-of-year reports submitted to EPA. Some or all of these credits may be revoked if EPA review of the end-of-year reports or any subsequent audit action(s) reveals problems or errors of any nature with credit computations.

Trading means the exchange of emission credits between manufacturers.

§ 90.203 General provisions.

(a) The certification averaging, banking, and trading provisions for $HC+NO_X$ and $NMHC+NO_X$ emissions from eligible engines are described in this subpart.

(b) An engine family may use the averaging, banking and trading provisions for $HC+NO_X$ and $NMHC+NO_X$ emissions if it is subject to regulation under this part with certain exceptions specified in paragraph (c) of this section. $HC+NO_X$ and $NMHC+NO_X$ credits shall be interchangeable subject to the limitations on credit generation, credit usage, and other provisions described in this subpart.

(c) A manufacturer shall not include in its calculation of credit generation and may exclude from its calculation of credit usage, any new engines:

(1) Which are intended to be exported, unless the manufacturer has reason or should have reason to believe that such engines have been or will be imported in a piece of equipment; or

(2) Which are subject to state engine emission standards pursuant to a waiver granted by EPA under section 209(e) of the Act, unless the manufacturer demonstrates to the satisfaction of the Administrator that inclusion of these engines in averaging, banking and trading is appropriate.

(d) For an engine family using credits, a manufacturer may, at its option, include its entire production of that engine family in its calculation of credit usage for a given model year.

(e) (1) A manufacturer may certify engine families at Family Emission Limits (FELs) above or below the applicable emission standard subject to the limitation in paragraph (f) of this

section, provided the summation of the manufacturer's projected balance of credits from all calculations and credit transactions for all engine classes in a given model year is greater than or equal to zero, as determined under § 90.207. Notwithstanding the previous sentence, a manufacturer may project a negative balance of credits as allowed under § 90.207(c)(2).

(2) A manufacturer of an engine family with an FEL exceeding the applicable emission standard must obtain positive emission credits sufficient to address the associated credit shortfall via averaging, banking, or trading.

(3) A nonhandheld engine family with an FEL below the applicable emission standard may generate positive emission credits for averaging, banking, or trading, or a combination thereof. A handheld engine family with an FEL below the applicable emission standard may generate positive emission credits for averaging or trading. A handheld engine family meeting the requirements of § 90.205(a)(4) or (5), whichever is applicable, may generate positive emission credits for banking.

(4) In the case of a Selective Enforcement Audit (SEA) failure, credits may be used to cover subsequent production of engines for the family in question if the manufacturer elects to recertify to a higher FEL. Credits may not be used to remedy a nonconformity determined by an SEA, except that the Administrator may permit the use of credits to address a nonconformity determined by an SEA where the use of such credits is one component of a multi-part remedy for the previously produced engines and the remedy, including the use of credits and the quantity of credits being used, is such that the Administrator is satisfied that the manufacturer has strong and lasting incentive to accurately verify its new engine emission levels and will set or reset its FELs for current and future model years so that production line compliance is assured.

(5) In the case of a production line testing (PLT) failure pursuant to subpart H of this part, a manufacturer may revise the FEL based upon production line testing results obtained under subpart H of this part and upon Administrator approval pursuant to § 90.122(d). The manufacturer may use credits to cover both past production and subsequent production of the engines as needed as allowed under § 90.207(c)(1).

(f) No Phase 2 engine family may have a HC + NO_X FEL that is greater than 32.2 g/kW-hr for Class I engines, 94 g/kW-hr for Class I-A engines, 50 g/kW-hr for Class I-B engines, 26.8 g/kW-hr for Class II engines, 336 g/kW-hr for Class III engines, 275 g/kW-hr for Class IV engines, or 186 g/kW-hr for Class V engines.

(g)(1) Credits generated in a given model year by an engine family subject to the Phase 2 emission requirements may only be used in averaging, banking or trading, as appropriate, for any other engine family for which the Phase 2 requirements are applicable. Credits generated in one model year may not be used for prior model years, except as allowed under § 90.207(c).

(2) For the 2005 model year and for each subsequent model year, manufacturers of Class II engines must provide a demonstration that the production weighted average FEL for HC+NO_X (including NMHC+NO_X FELs), for all of the manufacturer's Class II engines, will not exceed 13.6 g/kW-hr for the 2005 model year, 13.1 g/kW-hr for the 2006 model year and 12.6 g/kW-hr for the 2007 and each subsequent Phase 2 model year. Such demonstration shall be subject to the review and approval of the Administrator, shall be provided at the time of the first Class II certification of that model year and shall be based on projected eligible production for that model year.

(h) Manufacturers must demonstrate compliance under the averaging, banking, and trading provisions for a particular model year by 270 days after the end of the model year. Except as provided in § 90.207(c), an engine family generating negative credits for which the manufacturer does not obtain or generate an adequate number of positive credits by that date from the same or previous model year engines will violate the conditions of the certificate

of conformity. The certificate of conformity may be voided *ab initio* pursuant to § 90.123 for this engine family.

[64 FR 15239, Mar. 30, 1999, as amended at 65 FR 24308, Apr. 25, 2000; 69 FR 1833, Jan. 12, 2004]

§ 90.204 Averaging.

(a) Negative credits from engine families with FELs above the applicable emission standard must be offset by positive credits from engine families having FELs below the applicable emission standard, as allowed under the provisions of this subpart. Averaging of credits in this manner is used to determine compliance under § 90.207(b). A manufacturer may have a negative balance of credits as allowed under § 90.207(c)(2).

(b) Cross-class averaging of credits is allowed across all classes of nonroad spark-ignition engines at or below 19 kW.

(c) Credits used in averaging for a given model year may be obtained from credits generated in the same model year by another engine family, credits banked in previous model years, or credits of the same or previous model year obtained through trading subject to the provisions of § 90.205(a). Credits generated under the previously available ''Optional transition year averaging, banking, and trading program for Phase 2 handheld engines'' of §§ 90.212 through 90.220, since repealed, may also be used in averaging. The restrictions of this paragraph notwithstanding, credits from a given model year may be used to address credit needs of previous model year engines as allowed under § 90.207(c).

(d) The use of credits generated under the early banking provisions of § 90.205(b) is subject to regulations under this subpart.

[64 FR 15239, Mar. 30, 1999, as amended at 65 FR 24308, Apr. 25, 2000; 69 FR 1834, Jan. 12, 2004]

§ 90.205 Banking.

(a)(1) Beginning August 1, 2007, a manufacturer of a Class I engine family with an FEL below the applicable emission standard for a given model year may bank credits in that model year for use in averaging and trading. For new Class I engine families initially produced during the period starting August 1, 2003 through July 31, 2007, a manufacturer of a Class I engine family with an FEL below the applicable emission standard for a given model year may bank credits in that model year for use in averaging and trading.

(2) Beginning with the 2000 model year, a manufacturer of a Class I-A or Class I-B engine family with an FEL below the applicable emission standard for a given model year may bank credits in that model year for use in averaging and trading.

(3) Beginning with the 2001 model year, a manufacturer of a Class II engine family with an FEL below the applicable emission standard for a given model year may bank credits in that model year for use in averaging and trading.

(4) For the 2002 model year, a manufacturer of a Class III or Class IV engine family may bank credits for use in future model year averaging and trading from only those Class III or Class IV engine families with an FEL at or below 72 g/kW-hr. Beginning with the 2003 model year, a manufacturer of a Class III or Class IV engine family with an FEL below the applicable emission standard may generate credits for use in future model year averaging and trading.

(5) Beginning with the 2004 model year, a manufacturer of a Class V engine family with an FEL below the applicable emission standard may generate credits for use in future model year averaging and trading.

(6) Negative credits may be banked only according to the requirements under § 90.207(c).

(b)(1) For Class I engine families initially produced during the period beginning with the 1999 model year and prior to August 1, 2003, a manufacturer may bank early credits for engines with HC + NO_X FELs below 16.1 g/kW-hr. All early credits for such Class I engines shall be calculated against a HC + NO_X level of 20.5 g/kW-hr and may continue to be calculated against the 20.5 g/kW-hr level until August 1, 2007.

(2) Beginning with the 1999 model year and prior to the applicable date listed in paragraph (a) of this section for Class II engines, a manufacturer may bank early credits for all Class II

engines with $HC+NO_X$ FELs below 12.1 g/kW-hr. All early credits for Class II engines shall be calculated against a $HC+NO_X$ level of 18.0 g/kW-hr.

(3) Beginning with the 2000 model year and prior to the applicable date listed in paragraph (a) of this section for Class III engines, a manufacturer may bank early credits for all Class III engines with $HC+NO_X$ FELs below 72 g/kW-hr. All early credits for Class III engines shall be calculated against a $HC+NO_X$ level of 238 g/kW-hr.

(4) Beginning with the 2000 model year and prior to the applicable date listed in paragraph (a) of this section for Class IV engines, a manufacturer may bank early credits for all Class IV engines with $HC+NO_X$ FELs below 72 g/kW-hr. All early credits for Class IV engines shall be calculated against a $HC+NO_X$ level of 196 g/kW-hr.

(5) Beginning with the 2000 model year and prior to the applicable date listed in paragraph (a) of this section for Class V engines, a manufacturer may bank early credits for all Class V engines with $HC+NO_X$ FELs below 87 g/kW-hr. All early credits for Class V engines shall be calculated against a $HC+NO_X$ level of 143 g/kW-hr.

(6) Engines certified under the early banking provisions of this paragraph are subject to all of the requirements of this part applicable to Phase 2 engines.

(c) A manufacturer may bank actual credits only after the end of the model year and after EPA has reviewed the manufacturer's end-of-year reports. During the model year and before submittal of the end-of-year report, credits originally designated in the certification process for banking will be considered reserved and may be redesignated for trading or averaging in the end-of-year report and final report.

(d) Credits declared for banking from the previous model year that have not been reviewed by EPA may be used in averaging or trading transactions. However, such credits may be revoked at a later time following EPA review of the end-of-year report or any subsequent audit actions.

[64 FR 15239, Mar. 30, 1999, as amended at 65 FR 24308, Apr. 25, 2000; 69 FR 1834, Jan. 12, 2004]

§ 90.206 Trading.

(a) An engine manufacturer may exchange emission credits with other engine manufacturers in trading, subject to the trading restriction specified in § 90.207(c)(2).

(b) Credits for trading can be obtained from credits banked in previous model years or credits generated during the model year of the trading transaction.

(c) Traded credits can be used for averaging, banking, or further trading transactions, subject to § 90.205(a).

(d) Traded credits are subject to the limitations on use for past model years, as set forth in § 90.204(c).

(e) In the event of a negative credit balance resulting from a transaction, both the buyer and the seller are liable, except in cases involving fraud. Certificates of all engine families participating in a negative trade may be voided *ab initio* pursuant to § 90.123.

[64 FR 15239, Mar. 30, 1999, as amended at 65 FR 24309, Apr. 25, 2000; 69 FR 1834, Jan. 12, 2004]

§ 90.207 Credit calculation and manufacturer compliance with emission standards.

(a) For each engine family, $HC+NO_X$ [$NMHC+NO_X$] certification emission credits (positive or negative) are to be calculated according to the following equation and rounded to the nearest gram. Consistent units are to be used throughout the equation.

$$\text{Credits} = \text{Production} \times (\text{Standard} - \text{FEL}) \times \text{Power} \times \text{Useful life} \times \text{Load Factor}$$

Where:

Production = eligible production as defined in this part. Annual production projections are used to project credit availability for initial certification. Eligible production volume is used in determining actual credits for end-of-year compliance determination.

Standard = the current and applicable Small SI engine $HC+NO_X$ ($NMHC+NO_X$) emission standard in grams per kilowatt hour as determined in § 90.103 or, for early credits, the applicable emission level as specified in § 90.205(b).

FEL = the family emission limit for the engine family in grams per kilowatt hour.

Power = the maximum modal power of the certification test engine, in kilowatts, as calculated from the applicable federal test procedure as described in this part.

Useful Life = the useful life in hours corresponding to the useful life category for which the engine family was certified.

Load Factor = 47 percent (i.e., 0.47) for Test Cycle A and Test Cycle B, and 85 percent (i.e., 0.85) for Test Cycle C. For approved alternate test procedures, the load factor must be calculated according to the following formula:

$$\sum_{i=1}^{n}(\%\text{MTT mode}_i)\times(\%\text{MTS mode}_i)\times(\text{WF mode}_i)$$

Where:

%MTT mode_i = percent of the maximum FTP torque for mode i.

%MTS mode_i = percent of the maximum FTP engine rotational speed for mode i.

WF mode_i = the weighting factor for mode i.

(b) Manufacturer compliance with the emission standards is determined on a corporate average basis at the end of each model year. A manufacturer is in compliance when the sum of positive and negative emission credits it holds is greater than or equal to zero, except that the sum of positive and negative credits may be less than zero as allowed under paragraph (c) of this section.

(c)(1) If, as a result of production line testing as required in subpart H of this part, an engine family is determined to be in noncompliance pursuant to § 90.710, the manufacturer may raise its FEL for past and future production as necessary. Further, a manufacturer may carry a negative credit balance (known also as a credit deficit) for the subject class and model year and for the next three model years. The credit deficit may be no larger than that created by the nonconforming family. If the credit deficit still exists after the model year following the model year in which the nonconformity occurred, the manufacturer must obtain and apply credits to offset the remaining credit deficit at a rate of 1.2 grams for each gram of deficit within the next two model years. The provisions of this paragraph are subject to the limitations in paragraph (d) of this section.

(c)(2) For model years 2004 through 2007, an engine manufacturer who certifies at least one Class V engine family in a given model year may carry forward a credit deficit for four model years, but must not carry such deficit into the fifth year, provided the deficit is attributable to negative credits from its Class V engine families, subject to the following provisions:

(i) Credit deficits are permitted for model years 2004 through 2007 but cannot occur for more than two consecutive model years for a given manufacturer;

(ii)(A) If an engine manufacturer calculates that it has a credit deficit for a given model year, it must obtain sufficient credits from engine families produced by itself or another manufacturer in a model year no later than the fourth model year following the model year for which it calculated the credit deficit. (Example: if a manufacturer calculates that it has a credit deficit for the 2004 model year, it must obtain sufficient credits to offset that deficit from its own production or that of other manufacturers' 2008 or earlier model year engine families.);

(B) An engine manufacturer carrying the deficit into the first model year following the year in which it was generated must generate or obtain credits to offset that deficit and apply them to the deficit at a rate of 1:1. An engine manufacturer carrying the deficit into the second and third model years must generate or obtain credits to offset that deficit and apply them to the deficit at a rate of 1.1:1 (*i.e.*, deficits carried into the second and third model year must be repaid with credits equal to 110 percent of the deficit). Deficits carried into the fourth model year must be offset by credits at a rate of 1.2:1 (*i.e.*, 120 percent of the deficit);

(iii) An engine manufacturer who has a credit deficit may use credits from any class of spark-ignition nonroad engines at or below 19 kilowatts generated or obtained through averaging, banking or trading to offset the credit deficit; and,

(iv) An engine manufacturer must not bank credits for future use or trade credits to another engine manufacturer during a model year in which it has generated a deficit or into which it has carried a deficit.

(d) Regulations elsewhere in this part notwithstanding, if an engine manufacturer experiences two or more production line testing failures pursuant to the regulations in subpart H of this part in a given model year, the manufacturer may raise the FEL of previously produced engines only to the extent that such engines represent no more than 10 percent of the manufacturer's total eligible production for that model year, as determined on the date when the FEL is adjusted. For any additional engine families determined to be in noncompliance, the manufacturer must conduct offsetting projects approved in advance by the Administrator.

(e) If, as a result of production line testing under this subpart, a manufacturer desires to lower its FEL it may do so subject to § 90.708(c).

(f) Except as allowed at paragraph (c) of this section, when a manufacturer is not in compliance with the applicable emission standard by the date 270 days after the end of the model year, considering all credit calculations and transactions completed by then, the manufacturer will be in violation of the regulations in this part and EPA may, pursuant to § 90.123, void *ab initio* the certificates of engine families for which the manufacturer has not obtained sufficient positive emission credits.

(g) Credit deficits. (1) Manufacturers must offset any deficits for a given model year by the reporting deadline for the fourth model year following the model year in which the deficits were generated as required in paragraph (c)(2) of this section. Manufacturers may offset deficits by generating credits or acquiring credits generated by another manufacturer.

(2)(i) Failure to meet the requirements of paragraph (c)(2) of this section within the required timeframe for offsetting deficits will be considered to be a failure to satisfy the conditions upon which the certificate(s) was issued and the individual noncomplying engines not covered by the certificate must be determined according to this section.

(ii) If deficits are not offset within the specified time period, the number of engines which could not be covered in the calculation to show compliance with the fleet average $HC+NO_X$ standard in the model year in which the deficit occurred and thus are not covered by the certificate must be calculated using the methodology described in paragraph (g)(2)(iii) of this section.

(iii) EPA will determine the engines for which the condition on the certificate was not satisfied by designating engines in the Class V engine family with the highest $HC+NO_X$ FELs first and continuing progressively downward through the Class V engine families until a number of engines having a credit need, as calculated under paragraph (a) of this section, equal to the remaining deficit is reached. If this calculation determines that only a portion of engines in a Class V engine family contribute to the deficit situation, then EPA will designate a subset of actual engines in that engine family as not covered by the certificate, starting with the last engine produced and counting backwards. EPA may request additional information from the manufacturer that would help identify the actual engine not covered by the certificate.

(iv) In determining the engine count, EPA will calculate the mass of credits based on the factors identified in paragraph (a) of this section.

(3) If a manufacturer is purchased by, merges with or otherwise combines with another manufacturer, the manufacturer continues to be responsible for offsetting any deficits outstanding within the required time period. Any failure to offset the deficits will be considered to be a violation of paragraph (g)(1) of this section and may subject the manufacturer to an enforcement action for sale of engines not covered by a certificate, pursuant to paragraph (g)(2) of this section.

(4) If a manufacturer that has a deficit ceases production of handheld engines, the manufacturer will be considered immediately in violation of paragraph (g)(1) of this section and may be subject to an enforcement action for

sale of engines not covered by a certificate, pursuant to paragraph (g)(2) of this section

(5) For purposes of calculating the statute of limitations, a violation of the requirements of paragraph (g)(1) of this section, a failure to satisfy the conditions upon which a certificate(s) was issued and hence a sale of engines not covered by the certificate, all occur upon the expiration of the deadline for offsetting deficits specified in paragraph (g)(1) of this section.

[64 FR 15239, Mar. 30, 1999; 64 FR 16526, Apr. 5, 1999, as amended at 65 FR 24309, Apr. 25, 2000; 69 FR 1834, Jan. 12, 2004]

§ 90.208 Certification.

(a) In the application for certification a manufacturer must:

(1) Submit a statement that the engines for which certification is requested will not, to the best of the manufacturer's belief, cause the manufacturer to be in noncompliance under § 90.207(b) when all credits are calculated for the manufacturer's engine families.

(2) Declare an FEL for each engine family for $HC+NO_X$ ($NMHC+NO_X$). The FEL must have the same number of significant digits as the emission standard.

(3) Indicate the projected number of credits generated/needed for this family; the projected applicable eligible annual production volume, and the values required to calculate credits as given in § 90.207.

(4) Submit calculations in accordance with § 90.207 of projected emission credits (positive or negative) based on annual production projections for each family.

(5) (i) If the engine family is projected to have negative emission credits, state specifically the source (manufacturer/engine family or reserved) of the credits necessary to offset the credit deficit according to projected annual production.

(ii) If the engine family is projected to generate credits, state specifically (manufacturer/engine family or reserved) where the projected annual credits will be applied.

(iii) The manufacturer may supply the information required by this section in the form of a spreadsheet detailing the manufacturer's annual production plans and the credits generated or consumed by each engine family.

(b) All certificates issued are conditional upon manufacturer compliance with the provisions of this subpart both during and after the model year of production.

(c) Failure to comply with all provisions of this subpart will be considered to be a failure to satisfy the conditions upon which the certificate was issued, and the certificate may be determined to be void *ab initio* pursuant to § 90.123.

(d) The manufacturer bears the burden of establishing to the satisfaction of the Administrator that the conditions upon which the certificate was issued were satisfied or waived.

(e) Projected credits based on information supplied in the certification application may be used to obtain a certificate of conformity. However, any such credits may be revoked based on review of end-of-year reports, follow-up audits, and any other verification steps considered appropriate by the Administrator.

§ 90.209 Maintenance of records.

(a) The manufacturer must establish, maintain, and retain the following adequately organized and indexed records for each engine family:

(1) EPA engine family identification code;

(2) Family Emission Limit (FEL) or FELs where FEL changes have been implemented during the model year;

(3) Maximum modal power for the certification test engine;

(4) Projected production volume for the model year; and

(5) Records appropriate to establish the quantities of engines that constitute eligible production as defined in § 90.3 for each FEL.

(b) Any manufacturer producing an engine family participating in trading reserved credits must maintain the following records on an annual basis for each such engine family:

(1) The engine family;

(2) The actual applicable production volume;

(3) The values required to calculate credits as given in § 90.207;

(4) The resulting type and number of credits generated/required;

(5) How and where credit surpluses are dispersed; and

(6) How and through what means credit deficits are met.

(c) The manufacturer must retain all records required to be maintained under this section for a period of eight years from the due date for the end-of-model year report. Records may be retained as hard copy or reduced to microfilm, ADP diskettes, and so forth, depending on the manufacturer's record retention procedure; provided, that in every case all information contained in the hard copy is retained.

(d) Nothing in this section limits the Administrator's discretion in requiring the manufacturer to retain additional records, or submit information not specifically required by this section, if otherwise permitted by law.

(e) Pursuant to a request made by the Administrator, the manufacturer must submit to the Administrator the information that the manufacturer is required to retain.

(f) EPA may, pursuant to § 90.123, void *ab initio* a certificate of conformity for an engine family for which the manufacturer fails to retain the records required in this section or to provide such information to the Administrator upon request.

§ 90.210 End-of-year and final reports.

(a) End-of-year and final reports must indicate the engine family, the engine class, the actual production volume, the values required to calculate credits as given in § 90.207, and the number of credits generated/required. Manufacturers must also submit how and where credit surpluses were dispersed (or are to be banked) and/or how and through what means credit deficits were met. Copies of contracts related to credit trading must be included or supplied by the broker, if applicable. The report must include a calculation of credit balances to show that the credit summation for all engines is equal to or greater than zero (or less than zero in cases of negative credit balances as permitted in § 90.207(c)). For model year 2005 and later, the report must include a calculation of the production weighted average $HC+NO_X$ (including $NMHC+NO_X$) FEL for Class II engine families to show compliance with the provisions of § 90.203(g)(2).

(b) The calculation of eligible production for end-of-year and final reports must be based on engines produced for the United States market, excluding engines which are subject to state emission standards pursuant to a waiver granted by EPA under section 209(e) of the Act. Upon advance written request, the Administrator will consider other methods to track engines for credit calculation purposes that provide high levels of confidence that eligible production or sales are accurately counted.

(c)(1)End-of-year reports must be submitted within 90 days of the end of the model year to: Manager, Engine Compliance Programs Group (6403–J), U.S. Environmental Protection Agency, Washington, DC 20460.

(2) Unless otherwise approved by the Administrator, final reports must be submitted within 270 days of the end of the model year to: Manager, Engine Compliance Programs Group (6403–J), U.S. Environmental Protection Agency, Washington, DC 20460.

(d) Failure by a manufacturer to submit any end-of-year or final reports in the specified time for any engines subject to regulation under this part is a violation of § 90.1003(a)(2) and section 213(d) of the Clean Air Act for each engine.

(e) A manufacturer generating credits for banking only who fails to submit end-of-year reports in the applicable specified time period (90 days after the end of the model year) may not use the credits until such reports are received and reviewed by EPA. Use of projected credits pending EPA review is not permitted in these circumstances.

(f) Errors discovered by EPA or the manufacturer in the end-of-year report, including errors in credit calculation, may be corrected in the final report.

(g) If EPA or the manufacturer determines that a reporting error occurred on an end-of-year or final report previously submitted to EPA under this section, the manufacturer's credits and credit calculations must be recalculated. Erroneous positive credits will be void except as provided in paragraph (h) of this section. Erroneous negative

credit balances may be adjusted by EPA.

(h) If EPA review determines a reporting error in the manufacturer's favor (that is, resulting in an increased credit balance) or if the manufacturer discovers such an error within 270 days of the end of the model year, EPA shall restore the credits for use by the manufacturer.

(i) For 2007 and later model years, include in your end-of-year and final reports an accounting to show a separate balance of emission credits for handheld and nonhandheld engines. Use your best judgment to differentiate your current balance of banked credits for handheld and nonhandheld engines. You may exchange handheld and nonhandheld credits to demonstrate compliance with the requirements of this part 90. However, emission credits you generate for banking under this part 90 will be restricted for engines subject to the requirements of 40 CFR part 1054.

[64 FR 15239, Mar. 30, 1999, as amended at 73 FR 59181, Oct. 8, 2008]

§ 90.211 Request for hearing.

An engine manufacturer may request a hearing on the Administrator's voiding of the certificate under §§ 90.203(h), 90.206(e), 90.207(f), 90.208(c), or 90.209(f), pursuant to § 90.124. The procedures of § 90.125 shall apply to any such hearing.

Subpart D—Emission Test Equipment Provisions

§ 90.301 Applicability.

(a) This subpart describes the equipment required in order to perform exhaust emission tests on new nonroad spark-ignition engines and vehicles subject to the provisions of subpart A of this part. Certain text in this subpart is identified as pertaining to Phase 1 or Phase 2 engines. Such text pertains only to engines of the specified Phase. If no indication of Phase is given, the text pertains to all engines, regardless of Phase.

(b) Exhaust gases, either raw or dilute, are sampled while the test engine is operated using a steady state test cycle on an engine dynamometer. The exhaust gases receive specific component analysis determining concentration of pollutant. Emission concentrations are converted to mass emission rates in grams per hour based on either fuel flow, fuel flow and engine intake air flow, or exhaust volume flow. Weighted emission rates are reported as grams per brake-kilowatt hour (g/kW-hr). See subpart E of this part for a complete description of the test procedure.

(c) Additional information about system design, calibration methodologies, and so forth, for raw gas sampling can be found in 40 CFR part 1065. Examples for system design, calibration methodologies, and so forth, for dilute exhaust gas sampling can be found in 40 CFR part 1065.

(d) For Phase 2 Class I, Phase 2 Class I–B, and Phase 2 Class II natural gas fueled engines, use the procedures of 40 CFR part 1065 to measure nonmethane hydrocarbon (NMHC) exhaust emissions from Phase 2 Class I, Phase 2 Class I–B, and Phase 2 Class II natural gas fueled engines.

[60 FR 34598, July 3, 1995, as amended at 64 FR 15243, Mar. 30, 1999; 65 FR 24312, Apr. 25, 2000; 70 FR 40448, July 13, 2005]

§ 90.302 Definitions.

The definitions in § 90.3 apply to this subpart. The following definitions also apply to this subpart.

Intermediate speed means the engine speed which is 85 percent of the rated speed.

Natural gas means a fuel whose primary constituent is methane.

Rated speed means the speed at which the manufacturer specifies the maximum rated power of an engine.

[64 FR 15243, Mar. 30, 1999]

§ 90.303 Symbols, acronyms, abbreviations.

(a) The acronyms and abbreviations in § 90.5 apply to this subpart.

(b) The symbols in Table 1 in Appendix A of this subpart apply to this subpart.

§ 90.304 Test equipment overview.

(a) All engines subject to this subpart are tested for exhaust emissions. Engines are operated on dynamometers

meeting the specification given in § 90.305.

(b) The exhaust is tested for gaseous emissions using a raw gas sampling system as described in § 90.414 or a constant volume sampling (CVS) system as described in § 90.421. Both systems require analyzers (see paragraph (c) of this section) specific to the pollutant being measured.

(c) Analyzers used are a non-dispersive infrared (NDIR) absorption type for carbon monoxide and carbon dioxide analysis; paramagnetic (PMD), zirconia (ZRDO), or electrochemical type (ECS) for oxygen analysis; a flame ionization (FID) or heated flame ionization (HFID) type for hydrocarbon analysis; and a chemiluminescent detector (CLD) or heated chemiluminescent detector (HCLD) for oxides of nitrogen analysis.

§ 90.305 Dynamometer specifications and calibration accuracy.

(a) *Dynamometer specifications.* The dynamometer test stand and other instruments for measurement of speed and power output must meet the engine speed and torque accuracy requirements shown in Table 2 in Appendix A of this subpart. The dynamometer must be capable of performing the test cycle described in § 90.410.

(b) *Dynamometer calibration accuracy.* (1) The dynamometer test stand and other instruments for measurement of power output must meet the calibration frequency shown in Table 2 in Appendix A of this subpart.

(2) A minimum of three calibration weights for each range used is required. The weights must be equally spaced and traceable to within 0.5 percent of National Institute for Standards and Testing (NIST) weights. Laboratories located in foreign countries may certify calibration weights to local government bureau standards.

§ 90.306 Dynamometer torque cell calibration.

(a)(1) Any lever arm used to convert a weight or a force through a distance into a torque must be used in a horizontal position for horizontal shaft dynamometers (±five degrees). For vertical shaft dynamometers, a pulley system may be used to convert the dynamometer's horizontal loading into the vertical plane.

(2) Calculate the indicated torque (IT) for each calibration weight to be used by:

IT=Moment Arm (meters) × Calibration Weight (Newtons)

(3) Attach each calibration weight specified in § 90.305(b)(2) to the moment arm at the calibration distance determined in paragraph (a)(2) of this section. Record the power measurement equipment response (N-m) to each weight.

(4) Compare the torque value measured to the calculated torque.

(5) The measured torque must be within two percent of the calculated torque.

(6) If the measured torque is not within two percent of the calculated torque, adjust or repair the system. Repeat steps in paragraphs (a)(1) through (a)(6) of this section with the adjusted or repaired system.

(b) Option. A master load-cell or transfer standard may be used to verify the torque measurement system.

(1) The master load-cell and read out system must be calibrated using weights specified in § 90.305(b)(2).

(2) Attach the master load-cell and loading system.

(3) Load the dynamometer to a minimum of three equally spaced torque values as indicated by the master load-cell for each in-use range used.

(4) The in-use torque measurement must be within two percent of the torque measured by the master system for each load used.

(5) If the in-use torque is not within two percent of the master torque, adjust or repair the system. Repeat steps in paragraphs (b)(2) through (b)(4) of this section with the adjusted or repaired system.

(c) Calibrated resistors may not be used for engine flywheel torque transducer calibration, but may be used to span the transducer prior to engine testing.

(d) Other engine dynamometer system calibrations such as speed are performed as specified by the dynamometer manufacturer or as dictated by good engineering practice.

§ 90.307 Engine cooling system.

An engine cooling system is required with sufficient capacity to maintain the engine at normal operating temperatures as prescribed by the engine manufacturer. Auxiliary fan(s) may be used to maintain sufficient engine cooling during engine dynamometer operation.

§ 90.308 Lubricating oil and test fuels.

(a) *Lubricating oil*. Use the engine lubricating oil which meets the engine manufacturer's specifications for a particular engine and intended usage.

(1) Manufacturers must use engine lubricants representative of commercially available engine lubricants.

(2) For 2-stroke engines, the fuel/oil mixture ratio must be that which is recommended by the manufacturer.

(b) *Test Fuels—Certification*. (1) The manufacturer must use gasoline having the specifications, or substantially equivalent specifications approved by the Administrator, as specified in Table 3 in Appendix A of this subpart for exhaust emission testing of gasoline fueled engines. As an option, manufacturers may use the fuel specified in 40 CFR part 1065, subpart H, for gasoline-fueled engines.

(2) Alternative fuels, such as natural gas, propane, and methanol, used for exhaust emission testing and service accumulation of alternative fuel spark-ignition engines must be representative of commercially available alternative fuels.

(i) The manufacturer shall recommend the alternative fuel to be used for certification testing and engine service accumulation in accordance with paragraph (b)(3) of this section.

(ii) The Administrator shall determine the alternative fuel to be used for testing and engine service accumulation, taking into consideration the alternative fuel recommended by the manufacturer.

(3) Other fuels may be used for testing provided:

(i) They are commercially viable;

(ii) Information acceptable to the Administrator is provided to show that only the designated fuel would be used in customer service; and

(iii) Fuel specifications are approved in writing by the Administrator prior to the start of testing.

(c) *Test fuels—service accumulation and aging*. Unleaded gasoline representative of commercial gasoline generally available through retail outlets must be used in service accumulation and aging for gasoline-fueled spark-ignition engines. As an alternative, the certification test fuels specified under paragraph (b) of this section may be used for engine service accumulation and aging. Leaded fuel may not be used during service accumulation or aging.

[60 FR 34598, July 3, 1995, as amended at 64 FR 15243, Mar. 30, 1999; 70 FR 40448, July 13, 2005]

§ 90.309 Engine intake air temperature measurement.

(a) The measurement location must be within 10 cm of the engine intake system (i.e., the air cleaner, for most engines.)

(b) The temperature measurements must be accurate to within ±2 °C.

§ 90.310 Engine intake air humidity measurement.

This section refers to engines which are supplied with intake air other than the ambient air in the test cell (i.e., air which has been pumped directly to the engine air intake system). For engines which use ambient test cell air for the engine intake air, the ambient test cell humidity measurement may be used.

(a) *Humidity conditioned air supply*. Air that has had its absolute humidity altered is considered humidity-conditioned air. For this type of intake air supply, the humidity measurements must be made within the intake air supply system and after the humidity conditioning has taken place.

(b) *Unconditioned air supply*. Humidity measurements in unconditioned intake air supply systems must be made in the intake air stream entering the supply system. Alternatively, the humidity measurements can be measured within the intake air supply stream.

§ 90.311 Test conditions.

(a) *General requirements*. (1) Ambient temperature levels encountered by the test engine throughout the test sequence may not be less than 20 °C or

more than 30 °C. All engines must be installed on the test bed at their design installation angle to prevent abnormal fuel distribution.

(2) Calculate all volumes and volumetric flow rates at standard conditions for temperature and pressure, and use these conditions consistently throughout all calculations. Standard conditions for temperature and pressure are 25 °C and 101.3 kPa.

(b) *Engine test conditions*. Measure the absolute temperature (designated as T and expressed in Kelvin) of the engine air at the inlet to the engine and the dry atmospheric pressure (designated as p_s and expressed in kPa), and determine the parameter f according to the following provisions for naturally aspirated engines:

$$f = \frac{99}{p_s} \times \left(\frac{T}{298}\right)^{0.7}$$

For a certification test to be recognized as valid, the parameter f shall be between the limits as shown below: $0.96<f<1.04$

§ 90.312 Analytical gases.

(a) The shelf life of a calibration gas may not be exceeded. The expiration date stated by the gas supplier must be recorded.

(b) *Pure gases*. The required purity of the gases is defined by the contamination limits specified in this subsection. The following gases must be available for operation:

(1) Purified nitrogen, also refered to as ''zero-grade nitrogen'' (Contamination ≤ 1 ppm C, ≤ 1 ppm CO, ≤ 400 ppm CO_2, ≤ 0.1 ppm NO);

(2) Purified oxygen (Purity 99.5 percent vol O_2);

(3) Hydrogen-helium mixture (40 ±2 percent hydrogen, balance helium) (Contamination ≤ 1 ppm C, ≤ 400 ppm CO);

(4) Purified synthetic air, also refered to as ''zero air'' or ''zero gas'' (Contamination ≤ 1 ppm C, ≤ 1 ppm CO, ≤ 400 ppm CO_2, ≤ 0.1 ppm NO) (Oxygen content between 18–21 percent vol.).

(c) *Calibration and span gases*. (1) Calibration gas values are to be derived from NIST ''Standard Reference Materials'' (SRM's) and are to be single blends as specified in this subsection.

(2) Mixtures of gases having the following chemical compositions must be available:

C_3H_8 and purified synthetic air and/or C_3H_8 and purified nitrogen;

CO and purified nitrogen;

NO_X and purified nitrogen (the amount of NO_2 contained in this calibration gas must not exceed five percent of the NO content);

CO_2 and purified nitrogen.

NOTE: For the HFID or FID the manufacturer may choose to use as a diluent span gas and the calibration gas either purified synthetic air or purified nitrogen. Any mixture of C_3H_8 and purified synthetic air which contains a concentration of propane higher than what a gas supplier considers to be safe may be substituted with a mixture of C_3H_8 and purified nitrogen. However, the manufacturer must be consistent in the choice of diluent (zero air or purified nitrogen) between the calibration and span gases. If a manufacturer chooses to use C_3H_8 and purified nitrogen for the calibration gases, then purified nitrogen must be the diluent for the span gases.

(3) The true concentration of a span gas must be within ±two percent of the NIST gas standard. The true concentration of a calibration gas must be within ±one percent of the NIST gas standard. The use of precision blending devices (gas dividers) to obtain the required calibration gas concentrations is acceptable. Give all concentrations of calibration gas on a volume basis (volume percent or volume ppm).

(4) The gas concentrations used for calibration and span may also be obtained by means of a gas divider, diluting either with purified N_2 or with purified synthetic air. The accuracy of the mixing device must be such that the concentration of the diluted gases may be determined to within ±two percent.

(d) Oxygen interference check gases must contain propane with 350 ppmC ±75 ppmC hydrocarbon. Determine the concentration value to calibration gas tolerances by chromatographic analysis of total hydrocarbons plus impurities or by dynamic blending. For gasoline fueled engines, oxygen contentration must be between 0 and 1 percent O_2. Nitrogen must be the predominant diluent with the balance oxygen.

(e) Fuel for the hydrocarbon flame ionization detector (HC-FID) must be a blend of 40 ±two percent hydrogen with the balance being helium. The mixture must contain less than one ppm equivalent carbon response; 98 to 100 percent hydrogen fuel may be used with advance approval of the Administrator.

(f) *Hydrocarbon analyzer burner air.* The concentration of oxygen must be within one mole percent of the oxygen concentration of the burner air used in the latest oxygen interference check (percent O_2 I), see § 90.316(d). If the difference in oxygen concentration is greater than one mole percent, then the oxygen interference must be checked and, if necessary, the analyzer adjusted to meet the percent O_2 I requirements. The burner air must contain less than two ppmC hydrocarbon.

§ 90.313 Analyzers required.

(a) *Analyzers.* Analyze measured gases with the following instruments:

(1) *Carbon monoxide (CO) analysis.* (i) The carbon monoxide analyzer shall be of the non-dispersive infrared (NDIR) absorption type.

(ii) The use of linearizing circuits is permitted.

(2) *Carbon dioxide (CO_2) analysis.* (i) The carbon dioxide analyzer shall be of the non-dispersive infrared (NDIR) absorption type.

(ii) The use of linearizing circuits is permitted.

(3) *Oxygen (O_2) analysis.* Oxygen (O_2) analyzers may be of the paramagnetic (PMD), zirconia (ZRDO) or electrochemical type (ECS).

(4) *Hydrocarbon (HC) analysis.* (i) For Raw Gas Sampling, the hydrocarbon analyzer shall be of the heated flame ionization (HFID) type. For constant volume sampling, the hydrocarbon analyzer may be of the flame ionization (FID) type or of the heated flame ionization (HFID) type.

(ii) For the HFID system, if the temperature of the exhaust gas at the sample probe is below 190 °C, the temperature of the valves, pipe work, and so forth, must be controlled so as to maintain a wall temperature of 190 °C ±11 °C. If the temperature of the exhaust gas at the sample probe is above 190 °C, the temperature of the valves, pipe work, and so forth, must be controlled so as to maintain a wall temperature greater than 180 °C.

(iii) For the HFID analyzer, the detector, oven, and sample-handling components within the oven must be suitable for continuous operation at temperatures to 200 °C. It must by capable of maintaining temperature within ±5.5 °C of the set point.

(iv) Fuel and burner air must conform to the specifications in § 90.312.

(v) The percent of oxygen interference must be less than three percent, as specified in § 90.316(d).

(5) *Oxides of nitrogen (NO_X)* analysis.

(i) This analysis device consists of the following items:

(A) A NO_2 to NO converter. The NO_2 to NO converter efficiency must be at least 90 percent.

(B) An ice bath located after the NO_X converter (optional).

(C) A chemiluminescent detector (CLD) or heated chemiluminescent detector (HCLD).

(ii) The quench interference must be less than 3.0 percent as measured in § 90.325.

(b) *Other analyzers and equipment.* Other types of analyzers and equipment may be used if shown to yield equivalent results and if approved in advance by the Administrator.

(c) The following requirements must be incorporated as indicated in systems used for testing under this subpart.

(1) Carbon monoxide and carbon dioxide measurements must be made on a dry basis (for raw exhaust measurement only). Specific requirements for the means of drying the sample can be found in § 90.313(e).

(2) Calibration or span gases for the NO_X measurement system must pass through the NO_2 to NO converter.

(d) The electromagnetic compatibility (EMC) of the equipment must be on a level as to minimize additional errors.

(e) *Gas drying.* Chemical dryers are not an acceptable method of removing water from the sample. Water removal by condensation is acceptable. If water is removed by condensation, the sample gas temperature or sample dew point must be monitored either within the water trap or downstream and its temperature must not exceed 7 °C. A water trap performing this function is

an acceptable method. Means other than condensation may be used only with prior approval from the Administrator.

§ 90.314 Analyzer accuracy and specifications.

(a) *Measurement and accuracy—general.* The analyzers must have a measuring range which allows them to measure the concentrations of the exhaust gas sample pollutants with the accuracies shown in Table 2 in Appendix A of this subpart.

(1) *Precision.* The precision of the analyzer must be, at worst, two percent of full-scale concentration for each range used. The precision is defined as 2.5 times the standard deviation(s) of 10 repetitive responses to a given calibration or span gas.

(2) *Noise.* The analyzer peak-to-peak response to zero and calibration or span gases over any 10-second period must not exceed two percent of full-scale chart deflection on all ranges used.

(3) *Zero drift.* The analyzer zero-response drift during a one-hour period must be less than two percent of full-scale chart deflection on the lowest range used. The zero-response is defined as the mean response including noise to a zero-gas during a 30-second time interval.

(4) *Span drift.* The analyzer span drift during a one-hour period must be less than two percent of full-scale chart deflection on the lowest range used. The analyzer span is defined as the difference between the span-response and the zero-response. The span-response is defined as the mean response including noise to a span gas during a 30-second time interval.

(b) *Operating procedure for analyzers and sampling system.* Follow the start-up and operating instructions of the instrument manufacturer or use good engineering practice. Adhere to the minimum requirements given in §§ 90.316 through 90.325 and § 90.409.

(c) *Emission measurement accuracy—Bag sampling.* (1) Good engineering practice dictates that exhaust emission sample analyzer readings below 15 percent of full-scale chart deflection should generally not be used.

(2) Some high resolution read-out systems, such as computers, data loggers, and so forth, can provide sufficient accuracy and resolution below 15 percent of full scale. Such systems may be used provided that additional calibrations are made to ensure the accuracy of the calibration curves. The following procedure for calibration below 15 percent of full scale may be used:

NOTE TO PARAGRAPH (c): If a gas divider is used, the gas divider must conform to the accuracy requirements as follows. The use of precision blending devices (gas dividers) to obtain the required calibration gas concentrations is acceptable, provided that the blended gases are accurate to within ±1.5 percent of NIST gas standards or other gas standards which have been approved by the Administrator. This accuracy implies that primary gases used for blending must be ''named'' to an accuracy of at least ±one percent, traceable to NIST or other approved gas standards.

(i) Span the full analyzer range using a top range calibration gas. The span gases must be accurate to within ±two percent of NIST gas standards or other gas standards which have been approved by the Administrator.

(ii) Generate a calibration curve according to, and meeting the requirements, of the sections describing analyzer calibrations which are found in §§ 90.316, 90.317, 90.318, and 90.320.

(iii) Select a calibration gas (a span gas may be used for calibrating the CO_2 analyzer) with a concentration between the two lowest non-zero gas divider increments. This gas must be ''named'' to an accuracy of ±one percent of NIST gas standards or other standards approved by the Administrator.

(iv) Using the calibration curve fitted to the points generated in paragraphs (c)(2) (i) and (ii) of this section, check the concentration of the gas selected in paragraph (c)(2)(iii) of this section. The concentration derived from the curve must be within ±2.3 percent (±2.8 percent for CO_2 span gas) of the gas's original named concentration.

(v) Provided the requirements of paragraph (c)(2)(iv) of this section are met, use the gas divider with the gas selected in paragraph (c)(2)(iii) of this section and determine the remainder of the calibration points. Fit a calibration curve per §§ 90.316, 90.317, 90.318,

and 90.320 of this chapter for the entire analyzer range.

(d) *Emission measurement accuracy—continuous sampling.* Analyzers used for continuous analysis must be operated such that the measured concentration falls between 15 and 100 percent of full-scale chart deflection. Exceptions to these limits are:

(1) The analyzer's response may be less than 15 percent or more than 100 percent of full scale if automatic range change circuitry is used and the limits for range changes are between 15 and 100 percent of full-scale chart deflection;

(2) The analyzer's response may be less than 15 percent of full scale if:

(i) The alternative in paragraph (c)(2) of this section is used to ensure that the accuracy of the calibration curve is maintained below 15 percent; or

(ii) The full-scale value of the range is 155 ppm (C) or less; or

(iii) The emissions from the engine are erratic and the integrated chart deflection value for the cycle is greater than 15 percent of full scale; or

(iv) The contribution of all data read below the 15 percent level is less than 10 percent by mass of the final test results.

§ 90.315 Analyzer initial calibration.

(a) *Warming-up time.* The warming-up time should be according to the recommendations of the manufacturer. If not specified, a minimum of two hours should be allowed for warming up the analyzers.

(b) *NDIR, FID, and HFID analyzer.* Tune and maintain the NDIR analyzer per the instrument manufacturer recommendations or specifications or using good engineering practice. The combustion flame of the FID or HFID analyzer must be optimized in order to meet the specifications in § 90.316(b).

(c) *Zero setting and calibration.* Using purified synthetic air (or nitrogen), set the CO, CO_2, NO_X. and HC analyzers at zero. Connect the appropriate calibrating gases to the analyzers and record the values. Use the same gas flow rates and pressure as when sampling exhaust.

(d) *Rechecking of zero setting.* Recheck the zero setting and, if necessary, repeat the procedure described in paragraph (c) of this section.

§ 90.316 Hydrocarbon analyzer calibration.

(a) Calibrate the FID and HFID hydrocarbon analyzer as described in this section. Operate the HFID to a set point ±5.5 °C between 185 and 197 °C.

(b) *Initial and periodic optimization of detector response.* Prior to initial use and at least annually thereafter, adjust the FID and HFID hydrocarbon analyzer for optimum hydrocarbon response as specified in this paragraph. Alternative methods yielding equivalent results may be used, if approved in advance by the Administrator.

(1) Follow good engineering practices for initial instrument start-up and basic operating adjustment using the appropriate fuel (see § 90.312) and purified synthetic air or zero-grade nitrogen.

(2) Use of one of the following procedures is required for FID or HFID optimization:

(i) The procedure outlined in Society of Automotive Engineers (SAE) paper No. 770141, ''Optimization of a Flame Ionization Detector for Determination of Hydrocarbon in Diluted Automotive Exhausts;'' author, Glenn D. Reschke. This procedure has been incorporated by reference. See § 90.7.

(ii) The HFID optimization procedures outlined in 40 CFR part 1065, subpart D.

(iii) Alternative procedures may be used if approved in advance by the Administrator.

(3) After the optimum flow rates have been determined, record them for future reference.

(c) *Initial and periodic calibration.* Prior to initial use and monthly thereafter, or within one month prior to the certification test, the FID or HFID hydrocarbon analyzer must be calibrated on all normally used instrument ranges using the steps in this paragraph. Use the same flow rate and pressures as when analyzing samples. Introduce calibration gases directly at the analyzer. An optional method for dilute sampling described in 40 CFR part 1065, subpart F, may be used.

(1) Adjust analyzer to optimize performance.

(2) Zero the hydrocarbon analyzer with purified synthetic air or zero-grade nitrogen.

(3) Calibrate on each used operating range with calibration gases having nominal concentrations between 10 and 90 percent of that range. A minimum of six evenly spaced points covering at least 80 percent of the 10 to 90 range (64 percent) is required (see following table).

Example calibration points (%)	Acceptable for calibration?
20, 30, 40, 50, 60, 70	No, range covered is 50 percent, not 64.
20, 30, 40, 50, 60, 70, 80, 90	Yes.
10, 25, 40, 55, 70, 85	Yes.
10, 30, 50, 70, 90	No, though equally spaced and entire range covered, a minimum of six points are needed.

For each range calibrated, if the deviation from a least-squares best-fit straight line is two percent or less of the value at each data point, calculate concentration values by use of a single calibration factor for that range. If the deviation exceeds two percent at any point, use the best-fit non-linear equation which represents the data to within two percent of each test point to determine concentration.

(d) *Oxygen interference optimization.* Prior to initial use and monthly thereafter, perform the oxygen interference optimization as described in this paragraph. Choose a range where the oxygen interference check gases will fall in the upper 50 percent. Conduct the test, as outlined in this paragraph, with the oven temperature set as required by the instrument manufacturer. Oxygen interference check gas specifications are found in § 90.312(d).

(1) Zero the analyzer.

(2) Span the analyzer with the 21 percent oxygen blend.

(3) Recheck zero response. If it has changed more than 0.5 percent of full scale repeat paragraphs (d)(1) and (d)(2) of this section to correct the problem.

(4) Introduce the five percent and 10 percent oxygen interference check gases.

(5) Recheck the zero response. If it has changed by more than ±one percent of full scale, repeat the test.

(6) Calculate the percent of oxygen interference (designated as percent O_2 I) for each mixture in paragraph (d)(4) of this section according to the following equation.

$$\text{Percent } O_2\text{I} = \frac{\text{B} - \text{Analyzer response (ppmC)}}{\text{B}}\ (100)$$

$$\text{Analyzer response} = \left(\frac{\text{A}}{\text{\% of full-scale analyzer response due to A}}\right) \times (\text{\% of full-scale analyzer response due to B})$$

Where:

A = hydrocarbon concentration (ppmC) of the span gas used in paragraph (d)(2) of this section.

B = hydrocarbon concentration (ppmC) of the oxygen interference check gases used in paragraph (d)(4) of this section.

(7) The percent of oxygen interference (designated as percent O_2 I) must be less than ±three percent for all required oxygen interference check gases prior to testing.

(8) If the oxygen interference is greater than the specifications, incrementally adjust the air flow above and below the manufacturer's specifications, repeating paragraphs (d)(1) through (d)(7) of this section for each flow.

(9) If the oxygen interference is greater than the specification after adjusting the air flow, vary the fuel flow and thereafter the sample flow, repeating paragraphs (d)(1) through (d)(7) of this section for each new setting.

(10) If the oxygen interference is still greater than the specifications, repair or replace the analyzer, FID fuel, or burner air prior to testing. Repeat this section with the repaired or replaced equipment or gases.

[60 FR 34598, July 3, 1995, as amended at 70 FR 40448, July 13, 2005]

§ 90.317 Carbon monoxide analyzer calibration.

(a) Calibrate the NDIR carbon monoxide analyzer as described in this section.

(b) *Initial and periodic interference.* Prior to its initial use and annually thereafter, check the NDIR carbon monoxide analyzer for response to water vapor and CO_2.

(1) Follow good engineering practices for instrument start-up and operation. Adjust the analyzer to optimize performance on the most sensitive range to be used.

(2) Zero the carbon monoxide analyzer with either purified synthetic air or zero-grade nitrogen.

(3) Bubble a mixture of three percent CO_2 in N_2 through water at room temperature and record analyzer response.

(4) An analyzer response of more than one percent of full scale for ranges above 300 ppm full scale or more than three ppm on ranges below 300 ppm full scale requires corrective action. (Use of conditioning columns is one form of corrective action which may be taken.)

(c) *Initial and periodic calibration.* Prior to its initial use and monthly thereafter, or within one month prior to the certification test, calibrate the NDIR carbon monoxide analyzer.

(1) Adjust the analyzer to optimize performance.

(2) Zero the carbon monoxide analyzer with either purified synthetic air or zero-grade nitrogen.

(3) Calibrate on each used operating range with carbon monoxide-in-N_2 calibration gases having nominal concentrations between 10 and 90 percent of that range. A minimum of six evenly spaced points covering at least 80 percent of the 10 to 90 range (64 percent) is required (see following table).

Example calibration points (%)	Acceptable for calibration?
20, 30, 40, 50, 60, 70	No, range covered is 50 percent, not 64.
20, 30, 40, 50, 60, 70, 80, 90	Yes.
10, 25, 40, 55, 70, 85	Yes.
10, 30, 50, 70, 90	No, though equally spaced and entire range covered, a minimum of six points are needed.

Additional calibration points may be generated. For each range calibrated, if the deviation from a least-squares best-fit straight line is two percent or less of the value at each data point, calculate concentration values by use of a single calibration factor for that range. If the deviation exceeds two percent at any point, use the best-fit non-linear equation which represents the data to within two percent of each test point to determine concentration.

§ 90.318 Oxides of nitrogen analyzer calibration.

(a) Calibrate the chemiluminescent oxides of nitrogen analyzer as described in this section.

(b) *Initial and Periodic Interference:* Prior to its initial use and monthly thereafter, or within one month prior to the certification test, check the chemiluminescent oxides of nitrogen analyzer for NO_2 to NO converter efficiency. Figure 1 in Appendix B of this subpart is a reference for paragraphs (b)(1) through (11) of this section:

(1) Follow good engineering practices for instrument start-up and operation. Adjust the analyzer to optimize performance.

(2) Zero the oxides of nitrogen analyzer with purified synthetic air or zero-grade nitrogen.

(3) Connect the outlet of the NO_X generator to the sample inlet of the oxides of nitrogen analyzer which has been set to the most common operating range.

(4) Introduce into the NO_X generator analyzer-system an NO-in-nitrogen (N_2) mixture with an NO concentration equal to approximately 80 percent of the most common operating range. The NO_2 content of the gas mixture must be less than five percent of the NO concentration.

(5) With the oxides of nitrogen analyzer in the NO mode, record the concentration of NO indicated by the analyzer.

(6) Turn on the NO_X generator O_2 (or air) supply and adjust the O_2 (or air) flow rate so that the NO indicated by the analyzer is about 10 percent less than indicated in paragraph (b)(5) of this section. Record the concentration of NO in this NO+O_2 mixture as value ''c.''

(7) Switch the NO_X generator to the generation mode and adjust the generation rate so that the NO measured on the analyzer is 20 percent of that measured in paragraph (b)(5) of this section. There must be at least 10 percent unreacted NO at this point. Record the concentration of residual NO as value ''d.''

(8) Switch the oxides of nitrogen analyzer to the NO_X mode and measure total NO_X. Record this value as ''a.''

(9) Switch off the NO_X generator but maintain gas flow through the system. The oxides of nitrogen analyzer will indicate the NO_X in the NO+O_2 mixture. Record this value as ''b''.

(10) Turn off the NO_X generator O_2 (or air) supply. The analyzer will now indicate the NO_X in the original NO-in-N_2 mixture. This value should be no more than five percent above the value indicated in paragraph (b)(4) of this section.

(11) Calculate the efficiency of the NO_X converter by substituting the concentrations obtained into the following equation:

$$\text{percent efficiency} = \left(1 + \frac{a-b}{c-d}\right) \times 100$$

Where:

a = concentration obtained in paragraph (b)(8),
b = concentration obtained in paragraph (b)(9),
c = concentration obtained in paragraph (b)(6),
d = concentration obtained in paragraph (b)(7).

If converter efficiency is less than 90 percent, corrective action will be required.

(c) *Initial and periodic calibration.* Prior to its initial use and monthly thereafter, or within one month prior to the certification test, calibrate the chemiluminescent oxides of nitrogen analyzer on all normally used instrument ranges. Use the same flow rate as when analyzing samples. Proceed as follows:

(1) Adjust analyzer to optimize performance.

(2) Zero the oxides of nitrogen analyzer with purified synthetic air or zero-grade nitrogen.

(3) Calibrate on each normally used operating range with NO-in-N_2 calibration gases having nominal concentrations between 10 and 90 percent of that range. A minimum of six evenly spaced points covering at least 80 percent of the 10 to 90 range (64 percent) is required (see following table).

Example calibration points (%)	Acceptable for calibration?
20, 30, 40, 50, 60, 70	No, range covered is 50 percent, not 64
20, 30, 40, 50, 60, 70, 80, 90	Yes.
10, 25, 40, 55, 70, 85	Yes.
10, 30, 50, 70, 90	No, though equally spaced and entire range covered, a minimum of six points are needed.

Additional calibration points may be generated. For each range calibrated, if the deviation from a least-squares best-fit straight line is two percent or less of the value at each data point, calculate concentration values by use of a single calibration factor for that range. If the deviation exceeds two percent at any point, use the best-fit non-linear equation which represents the data to within two percent of each test point to determine concentration.

(d) The initial and periodic interference, system check, and calibration test procedures specified in 40 CFR part 1065, subpart D, may be used in lieu of the procedures specified in this section.

[60 FR 34598, July 3, 1995, as amended at 70 FR 40449, July 13, 2005]

§ 90.319 NO_X converter check.

(a) The efficiency of the converter used for the conversion of NO_2 to NO is tested as given in paragraphs (a)(1) through (a)(8) of this section.

(1) Using the test setup as shown in Figure 1 in Appendix B of this subpart (see also § 90.318 of this chapter) and the procedure described in paragraphs (a)(2) through (a)(8) of this section, test

the efficiency of converters by means of an ozonator.

(2) Calibrate the HCLD or CLD in the most common operating range following the manufacturer's specifications using zero and span gas (the NO content of which must amount to about 80 percent of the operating range and the NO_2 concentration of the gas mixture less than five percent of the NO concentration). The NO_X analyzer must be in the NO mode so that the span gas does not pass through the converter. Record the indicated concentration.

(3) Calculate the efficiency of the NO_X converter as described in § 90.318(b).

(4) Via a T-fitting, add oxygen continuously to the gas flow until the concentration indicated is about 20 percent less than the indicated calibration concentration given in paragraph (a)(2) of this section. Record the indicated concentration ''c.'' The ozonator is kept deactivated throughout the process.

(5) Activate the ozonator to generate enough ozone to bring the NO concentration down to about 20 percent (minimum 10 percent) of the calibration concentration given in paragraph (a)(2) of this section. Record the indicated concentration ''d.''

NOTE: If, with the analyzer in the most common range, the NO_X converter can not give a reduction from 80 percent to 20 percent, then use the highest range which will give the reduction.

(6) Switch the NO analyzer to the NO_X mode which means that the gas mixture (consisting of NO, NO_2, O_2 and N_2) now passes through the converter. Record the indicated concentration ''a.''

(7) Deactivate the ozonator. The mixture of gases described in paragraph (a)(6) of this section passes through the converter into the detector. Record the indicated concentration ''b.''

(8) Switched to NO mode with the ozonator deactivated, the flow of oxygen or purified synthetic air is also shut off. The NO_X reading of the analyzer may not deviate by more than ±five percent of the theoretical value of the figure given in paragraph (a)(2) of this section.

(b) The efficiency of the converter must be tested prior to each calibration of the NO_X analyzer.

(c) The efficiency of the converter may not be less than 90 percent.

§ 90.320 Carbon dioxide analyzer calibration.

(a) Prior to its initial use and monthly thereafter, or within one month prior to the certification test, calibrate the NDIR carbon dioxide analyzer as follows:

(1) Follow good engineering practices for instrument start-up and operation. Adjust the analyzer to optimize performance.

(2) Zero the carbon dioxide analyzer with either purified synthetic air or zero-grade nitrogen.

(3) Calibrate on each normally used operating range with carbon dioxide-in-N_2 calibration or span gases having nominal concentrations between 10 and 90 percent of that range. A minimum of six evenly spaced points covering at least 80 percent of the 10 to 90 range (64 percent) is required (see following table).

Example calibration points (%)	Acceptable for Calibration?
20, 30, 40, 50, 60, 70	No, range covered is 50 percent, not 64.
20, 30, 40, 50, 60, 70, 80, 90	Yes.
10, 25, 40, 55, 70, 85	Yes.
10, 30, 50, 70, 90	No, though equally spaced and entire range covered, a minimum of six points are needed.

Additional calibration points may be generated. For each range calibrated, if the deviation from a least-squares best-fit straight line is two percent or less of the value at each data point, calculate concentration values by use of a single calibration factor for that range. If the deviation exceeds two percent at any point, use the best-fit non-linear equation which represents the data to within two percent of each test point to determine concentration.

(b) The initial and periodic interference, system check, and calibration test procedures specified in 40 CFR part 1065, subparts C and D, may be used in lieu of the procedures in this section.

[60 FR 34598, July 3, 1995, as amended at 70 FR 40449, July 13, 2005]

§ 90.321 NDIR analyzer calibration.

(a) *Detector optimization.* If necessary, follow the instrument manufacturer's instructions for initial start-up and basic operating adjustments.

(b) *Calibration curve.* Develop a calibration curve for each range used as follows:

(1) Zero the analyzer.

(2) Span the analyzer to give a response of approximately 90 percent of full-scale chart deflection.

(3) Recheck the zero response. If it has changed more than 0.5 percent of full scale, repeat the steps given in paragraphs (b)(1) and (b)(2) of this section.

(4) Record the response of calibration gases having nominal concentrations between 10 and 90 percent of full-scale concentration. A minimum of six evenly spaced points covering at least 80 percent of the 10 to 90 range (64 percent) is required (see following table).

Example calibration points (%)	Acceptable for calibration?
20, 30, 40, 50, 60, 70	No, range covered is 50 percent, not 64.
20, 30, 40, 50, 60, 70, 80, 90	Yes.
10, 25, 40, 55, 70, 85	Yes.
10, 30, 50, 70, 90	No, though equally spaced and entire range covered, a minimum of six points are needed.

(5) Generate a calibration curve. The calibration curve must be of fourth order or less, have five or fewer coefficients, and be of the form of the following equation (1) or (2). Include zero as a data point. Compensation for known impurities in the zero gas can be made to the zero-data point. The calibration curve must fit the data points within two percent of point or one percent of full scale, whichever is less.

$$y = Ax^4 + Bx^3 + Cx^2 + Dx + E \qquad (1)$$

$$y = \frac{x}{Ax^4 + Bx^3 + Cx^2 + Dx + E} \qquad (2)$$

where:

y = concentration
x = chart deflection

(6) Option. A new calibration curve need not be generated if:

(i) A calibration curve conforming to paragraph (b)(5) of this section exists; or,

(ii) The responses generated in paragraph (b)(4) of this section are within one percent of full scale or two percent of point, whichever is less, of the responses predicted by the calibration curve for the gases used in paragraph (b)(4) of this section.

(7) If multiple range analyzers are used, the lowest range used must meet the curve fit requirements below 15 percent of full scale.

(c) *Linear calibration criteria.* If any range is within two percent of being linear, a linear calibration may be used. To determine if this criterion is met:

(1) Perform a linear least-square regression on the data generated. Use an equation of the form y=mx, where x is the actual chart deflection and y is the concentration.

(2) Use the equation z=y/m to find the linear chart deflection (designated as z) for each calibration gas concentration (designated as y).

(3) Determine the linearity (designated as percent L) for each calibration gas by:

$$\% L = \frac{(z - x)}{\text{Full-scale linear chart deflection}} \times (100)$$

(4) The linearity criterion is met if the %L is less than ±two percent for each data point generated. For each emission test, use a calibration curve of the form Y=mx. The slope (designated as m) is defined for each range by the spanning process.

§ 90.322 Calibration of other equipment.

Calibrate other test equipment used for testing as often as required by the test equipment manufacturer or as necessary according to good engineering practice.

§ 90.323 Analyzer bench checks.

(a) Prior to initial use and after major repairs, verify that each analyzer complies with the specifications given in Table 2 in Appendix A of this subpart.

(b) If a stainless steel NO_2 to NO converter is used, condition all new or replacement converters. The conditioning consists of either purging the converter with air for a minimum of four hours or until the converter efficiency is greater than 90 percent. The converter must be at operational temperature while purging. Do not use this procedure prior to checking converter efficiency on in-use converters.

§ 90.324 Analyzer leakage check.

(a) *Vacuum side leak check.* (1) Check any location within the analysis system where a vacuum leak could affect the test results.

(2) The maximum allowable leakage rate on the vacuum side is 0.5 percent of the in-use flow rate for the portion of the system being checked. The analyzer flows and bypass flows may be used to estimate the in-use flow rates.

(3) The sample probe and the connection between the sample probe and valve V2, see Figure 1 in Appendix B of subpart E of this part, may be excluded from the leak check.

(b) *Pressure-side leak check.* Substantial leaks of the sample on the pressure side of the system may impact sample integrity if the leaks are of sufficient magnitude. As a safety precaution, good engineering practice would require that manufacturers perform periodic pressure-side leak checks of the sampling system. The recommended maximum leakage rate on the pressure side is five percent of the in-use flow rate.

[60 FR 34598, July 3, 1995, as amended at 70 FR 40449, July 13, 2005]

§ 90.325 Analyzer interference checks.

(a) Gases present in the exhaust other than the one being analyzed can interfere with the reading in several ways. Positive interference occurs in NDIR and PMD instruments when the interfering gas gives the same effect as the gas being measured, but to a lesser degree. Negative interference occurs in NDIR instruments by the interfering gas broadening the absorption band of the measured gas, and in CLD instruments by the interfering gas quenching the radiation. The interference checks described in this section are to be made initially and after any major repairs that could affect analyzer performance.

(b) *CO analyzer water and CO_2 interference checks.* Bubble through water at room temperature a CO_2 span gas having a concentration of between 80 percent and 100 percent inclusive of full scale of the maximum operating range used during testing and record the analyzer response. For dry measurements, this mixture may be introduced into the sample system prior to the water trap. The analyzer response must not be more than one percent of full scale for ranges equal to or above 300 ppm or more than three ppm for ranges below 300 ppm.

(c) *NO^x analyzer quench check.* The two gases of concern for CLD (and HCLD) analyzers are CO_2 and water vapor. Quench responses to these two gases are proportional to their concentrations and, therefore, require test techniques to determine quench at the highest expected concentrations experienced during testing.

(1) *NO_X analyzer CO_2 quench check.* (i) Pass a CO_2 span gas having a concentration of 80 percent to 100 percent of full scale of the maximum operating range used during testing through the CO_2 NDIR analyzer and record the value ''a.''

(ii) Dilute the CO_2 span gas approximately 50 percent with NO span gas and pass through the CO_2 NDIR and CLD (or HCLD). Record the CO_2 and NO values as ''b'' and ''c'' respectively.

(iii) Shut off the CO_2 and pass only the NO span gas through the CLD (or HCLD). Record the NO value as ''d.''

(iv) Calculate the percent CO_2 quench as follows, not to exceed three percent:

$$\%\ CO_2\ \text{quench} = 100 \times \left(1 - \frac{(c \times a)}{(d \times a) - (d \times b)}\right) \times (a/b)$$

Where:

a = Undiluted CO_2 concentration (percent)
b = Diluted CO_2 concentration (percent)
c = Diluted NO concentration (ppm)
d = Undiluted NO concentration (ppm)

(2) *NO_X analyzer water quench check.* (i) This check applies to wet measurements only. An NO span gas having a concentration of 80 percent to 100 percent of full scale of a normal operating range is passed through the CLD (or HCLD) and the response recorded as ''D''. The NO span gas is then bubbled through water at room temperature and passed through the CLD (or HCLD) and the analyzer's response recorded as AR. Determine and record the analyzer's absolute operating pressure and the bubbler water temperature. (It is important that the NO span gas contains minimal NO_2 concentration for this check. No allowance for absorption of NO_2 in water has been made in the following quench calculations.)

(ii) Calculations for water quench must consider dilution of the NO span gas with water vapor and scaling of the water vapor concentration of the mixture to that expected during testing. Determine the mixture's saturated vapor pressure (designated as Pwb) that corresponds to the bubbler water temperature. Calculate the water concentration (''Z1'', percent) in the mixture by the following equation:

$$Z1 = 100 \times \frac{Pwb}{GP}$$

where GP is the analyzer's standard operating pressure (pascals).

(iii) Calculate the expected dilute NO span gas and water vapor mixture concentration (designated as D1) by the following equation:

$$D1 = D \times \left(1 - \frac{Z1}{100}\right)$$

§ 90.326 Pre- and post-test analyzer calibration.

Calibrate only the range of each analyzer used during the engine exhaust emission test prior to and after each test in accordance with the following:

(a) Make the calibration by using a zero gas and a span gas. The span gas value must be between 75 and 100 percent of the highest range used.

(b) Use the same analyzer(s) flow rate and pressure as that used during exhaust emission test sampling.

(c) Warm-up and stabilize the analyzer(s) before the calibration is made.

(d) If necessary clean and/or replace filter elements before calibration is made.

(e) Calibrate analyzer(s) as follows:

(1) Zero the analyzer using the appropriate zero gas. Adjust analyzer zero if necessary. Zero reading should be stable.

(2) Span the analyzer using the appropriate span gas for the range being calibrated. Adjust the analyzer to the calibration set point if necessary.

(3) Re-check zero and span set points.

(4) If the response of the zero gas or span gas differs more than one percent of full scale at the highest range used, then repeat paragraphs (e)(1) through (3) of this section.

[60 FR 34598, July 3, 1995, as amended at 70 FR 40449, July 13, 2005]

§ 90.327 Sampling system requirements.

(a) *Sample component surface temperature.* For sampling systems which use heated components, use engineering judgment to locate the coolest portion of each component (pump, sample line section, filters, and so forth) in the heated portion of the sampling system that has a separate source of power or heating element. Monitor the temperature at that location. If several components are within an oven, then only the surface temperature of the component with the largest thermal mass and the oven temperature need be measured.

(b) If water is removed by condensation, monitor the sample gas temperature or sample dew point either within the water trap or downstream. It may not exceed 7 °C.

§ 90.328 Measurement equipment accuracy/calibration frequency table.

(a) The accuracy of measurements must be such that the maximum tolerances shown in Table 2 in Appendix A of this subpart are not exceeded.

(b) All equipment and analyzers must be calibrated according to the frequencies shown in Table 2 in Appendix A of this subpart.

(c) Prior to initial use and after major repairs, bench check each analyzer (see § 90.323).

(d) Calibrate equipment as specified in § 90.306 and §§ 90.315 through 90.322.

(e) At least monthly, or after any maintenance which could alter calibration, perform the following calibrations and checks.

(1) Leak check the vacuum side of the system (see § 90.324(a)).

(2) Verify that the automatic data collection system (if used) meets the requirements found in Table 2 in Appendix A of this subpart.

(3) Check the fuel flow measurement instrument to insure that the specifications in Table 2 in Appendix A of this subpart are met.

(f) Verify that all NDIR analyzers meet the water rejection ratio and the CO_2 rejection ratio as specified in § 90.325.

(g) Verify that the dynamometer test stand and power output instrumentation meet the specifications in Table 2 in Appendix A of this subpart.

§ 90.329 Catalyst thermal stress test.

(a) *Oven characteristics*. The oven used for thermally stressing the test catalyst must be capable of maintaining a temperature of 500 ±5 °C and 1000 ±10 °C.

(b) *Evaluation gas composition*. (1) A synthetic exhaust gas mixture is used for evaluating the effect of thermal stress on catalyst conversion efficiency.

(2) The synthetic exhaust gas mixture must have the following composition:

Constituent	Volume percent	Parts per million
Carbon Monoxide	1	.....
Oxygen	1.3	.....
Carbon Dioxide	3.8	.....
Water Vapor	10	.....
Sulfer dioxide	.....	20
Oxides of nitrogen	.....	280
Hydrogen	.....	3500
Hydrocarbon*	.....	4000
Nitrogen = Balance		

* Propylene/propane ratio = 2/1.

(c) *Phase 2 engines*. The catalyst thermal stress test is not required for engine families certified to the Phase 2 standards.

[60 FR 34598, July 3, 1995, as amended at 64 FR 15243, Mar. 30, 1999]

Appendix A to Subpart D of Part 90—Tables

Table 1—Symbols Used in Subpart D

Symbol	Term	Unit
CO	Carbon monoxide.	
CO_2	Carbon dioxide.	
NO	Nitric oxide.	
NO_2	Nitrogen dioxide.	
NO_X	Oxides of nitrogen.	
O_2	Oxygen.	
conc	Concentration (ppm by volume)	ppm
f	Engine specific parameter considering atmospheric conditions.	
F_{FCB}	Fuel specific factor for the carbon balance calculation.	
F_{FD}	Fuel specific factor for exhaust flow calculation on dry basis.	
F_{FH}	Fuel specific factor representing the hydrogen to carbon ratio.	
F_{FW}	Fuel specific factor for exhaust flow calculation on wet basis.	
G_{AIRW}	Intake air mass flow rate on wet basis	kg/h
G_{AIRD}	Intake air mass flow rate on dry basis	kg/h
G_{EXHW}	Exhaust gas mass flow rate on wet basis	kg/h
G_{Fuel}	Fuel mass flow rate	kg/h
H	Absolute humidity (water content related to dry air)	gr/kg

TABLE 1—SYMBOLS USED IN SUBPART D—Continued

Symbol	Term	Unit
i	Subscript denoting an individual mode.	
K_H	Humidity correction factor.	
L	Percent torque related to maximum torque for the test mode	percent
mass	Pollutant mass flow	g/h
$n_{d,i}$	Engine speed (average at the i'th mode during the cycle)	1/min
P_s	Dry atmospheric pressure	kPa
P_d	Test ambient saturation vapor pressure at ambient temperature	kPa
P	Gross power output uncorrected	kW
P_{AUX}	Declared total power absorbed by auxiliaries fitted for the test	kW
P_M	Maximum power measured at the test speed under test conditions	kW
P_i	$P_i = P_{M,i} + P_{AUX,i}$.	
P_B	Total barometric pressure (average of the pre-test and post-test values)	kPa
R_a	Relative humidity of the ambient air	percent
T	Absolute temperature at air inlet	C
T_{be}	Air temperature after the charge air cooler (if applicable) (average)	C
T_{clout}	Coolant temperature outlet (average)	C
T_{Dd}	Absolute dew point temperature	C
$T_{d,i}$	Torque (average at the i'th mode during the cycle)	N-m
T_{SC}	Temperature of the intercooled air	C
T_{ref}.	Reference temperature	C
V_{EXHD}	Exhaust gas volume flow rate on dry basis	m^3/h
V_{AIRW}	Intake air volume flow rate on wet basis	m^3/h
P_B	Total barometric pressure	kPa
V_{EXHW}	Exhaust gas volume flow rate on wet basis	m^3/h
WF	Weighing factor.	
WF_E	Effective weighing factor.	

TABLE 2—MEASUREMENT CALIBRATION ACCURACY AND FREQUENCY

No.	Item	Permissible deviation from reading*		Calibration frequency
		Non-idle	Idle	
1	Engine speed	±2 %	Same	Monthly or within one month prior to the certification test.
2	Torque	±2 %		Monthly or within one month prior to the certification test.
3	Fuel consumption	±2 %	±5%	Monthly or within one month prior to the certification test.
4	Air consumption	±2 %	±5%	As required.
5	Coolant temperature	±2 °C	Same	As required.
6	Lubricant temperature	±2 °C	Same	As required.
7	Exhaust back pressure	±5 %	Same	As required.
8	Inlet depression	±5 %	Same	As required.
9	Exhaust gas temperature	±15 °C	Same	As required.
10	Air inlet temperature (combustion air)	±2 °C	Same	As required.
11	Atmospheric pressure	±0.5 %	Same	As required.
12	Humidity (combustion air) (relative)	±3.0 %	Same	As required.
13	Fuel temperature	±2 °C	Same	As required.
14	Temperature with regard to dilution system.	±2 °C	Same	As required.
15	Dilution air humidity	±3 % absolute	Same	As required.
16	HC analyzer	±2 %**	Same	Monthly or within one month prior to the certification test.
17	CO analyzer	±2 %**	Same	Monthly or within one month prior to the certification test.
18	NO_X analyzer	±2 %**	Same	Monthly or within one month prior to the certification test.
19	NO_X converter check	90 %	Same	Monthly or within one month prior to the certification test.
20	CO_2 analyzer	±2 %**	Same	Monthly or within one month prior to the certification test.

*All accuracy requirements pertain to the final recorded value which is inclusive of the data acquisition system.
**If reading is under 100 ppm then the accuracy shall be ±2 ppm.

TABLE 3—TEST FUEL SPECIFICATIONS

Item	Property	Tolerances	Procedure (ASTM)[1]
Sulfur, ppm max.	339		D 2622–92

TABLE 3—TEST FUEL SPECIFICATIONS—Continued

Item	Property	Tolerances	Procedure (ASTM) [1]
Benzene, max. %	1.5		D 3606–92
RVP, psi	8.7	±0.2	D 5191–93a
Octane, R+M/2	87.3	±0.5	D 2699–92 D 2700–92
IBP, °C	32.8	±11.0	D 86–93
10 % point, °C	53.3	±5.5	D 86–93
50 % point, °C	103.3	±5.5	D 86–93
90 % point, °C	165.6	±5.5	D 86–93
End Point, max. °C	212.8		D 86–93
Phosphorus, g/liter, max.	0.02		D 3231–89
Lead, g/liter, max.	0.02		
Manganese, g/liter, max.	0.004		
Aromatics, %	32.0	±4.0	D 1319–89
Olefins, %	9.2	±4.0	D 1319–89
Saturates, %	Remainder		D 1319–89

[1] All ASTM procedures in this table have been incorporated by reference. See § 90.7.

APPENDIX B TO SUBPART D OF PART 90—FIGURES

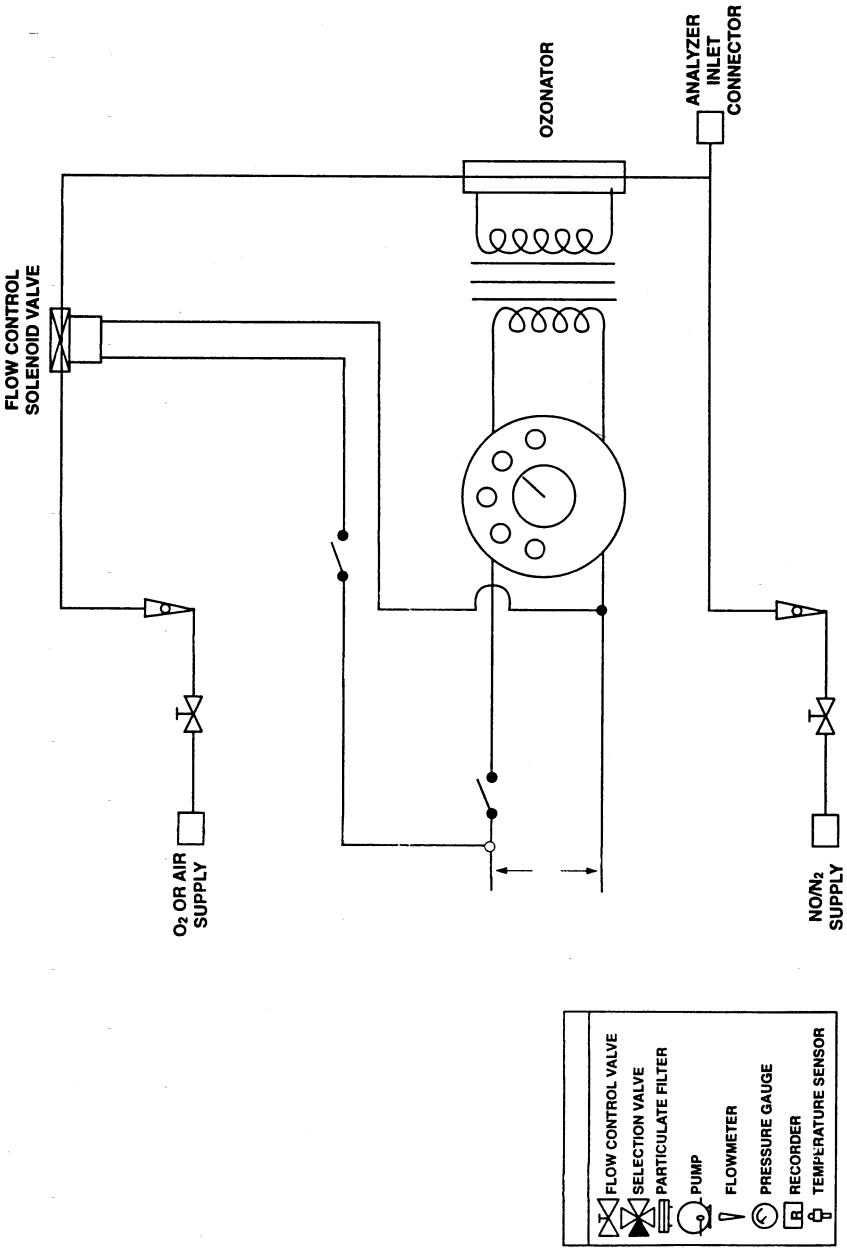

Figure 1. — NOx Converter Efficiency Detector

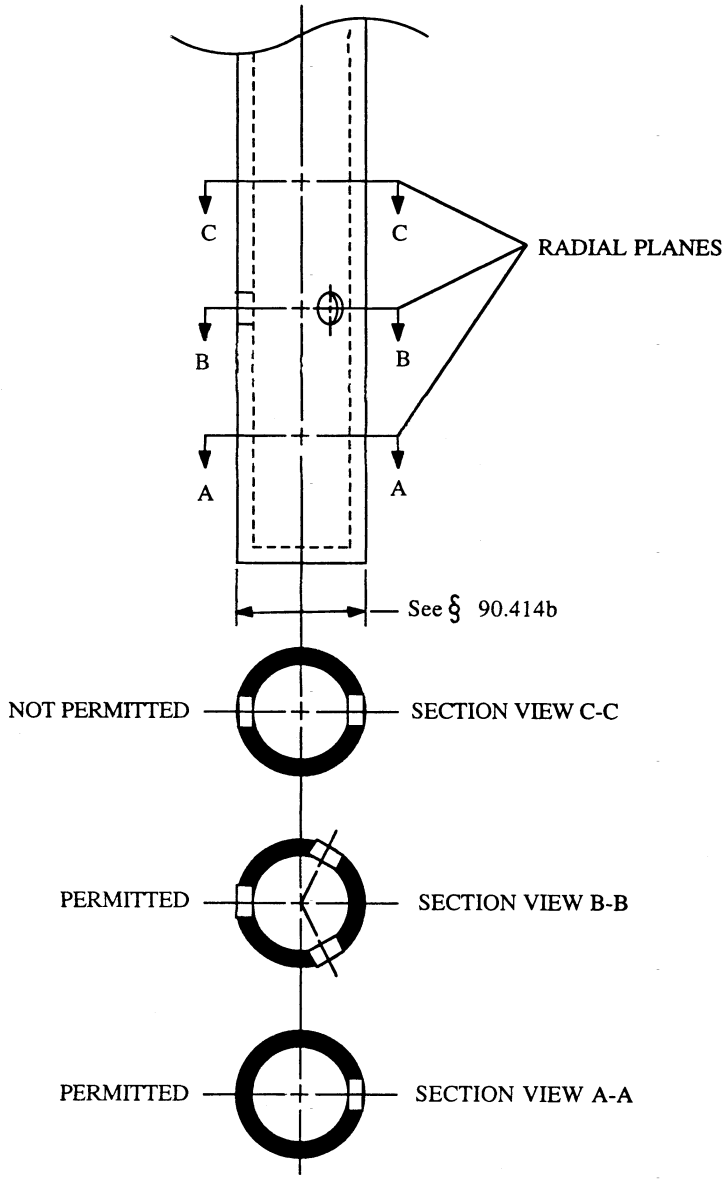

Figure 2.—Sample Probe and Typical Hole Spacings

Subpart E—Gaseous Exhaust Test Procedures

§ 90.401 Applicability.

(a) This subpart describes the procedures to follow in order to perform exhaust emission tests on new nonroad spark-ignition engines and vehicles subject to the provisions of subpart A of part 90. Provisions specific to raw gas sampling are in § 90.414 through § 90.419, provisions specific to constant volume sampling are in § 90.420 through § 90.426. All other sections in this subpart apply to both raw gas sampling and constant volume sampling except where indicated otherwise.

(b) Requirements for emission test equipment and calibrating this equipment are found in subpart D of this part.

(c) Certain text in this subpart is identified as pertaining to Phase 1 or Phase 2 engines. Such text pertains only to engines of the specified Phase. If no indication of Phase is given, the text pertains to all engines, regardless of Phase.

(d) For Phase 2 Class I, Phase 2 Class I–B, and Phase 2 Class II natural gas fueled engines, use the equipment specified in 40 CFR part 1065, subparts D and E, to measure nonmethane hydrocarbon (NMHC) exhaust emissions from Phase 2 Class I, Phase 2 Class I–B, and Phase 2 Class II natural gas fueled engines.

[60 FR 34598, July 3, 1995, as amended at 64 FR 15244, Mar. 30, 1999; 65 FR 24312, Apr. 25, 2000; 70 FR 40449, July 13, 2005]

§ 90.402 Definitions.

The definitions in § 90.3, § 90.101, and § 90.302 apply to this subpart.

§ 90.403 Symbols, acronyms, and abbreviations.

(a) The acronyms and abbreviations in § 90.5 apply to this subpart.

(b) The symbols in Table 1 in Appendix A to Subpart D apply to this subpart.

§ 90.404 Test procedure overview.

(a) The test consists of prescribed sequences of engine operating conditions to be conducted on an engine dynamometer or equivalent load and speed measurement device. The exhaust gases generated during engine operation are sampled either raw or dilute and specific components are analyzed through the analytical system.

(b) The test is designed to determine the brake-specific emissions of hydrocarbons, carbon monoxide, carbon dioxide, and oxides of nitrogen and fuel consumption. For Phase 2 Class I-B, Class I, and Class II natural gas fueled engines the test is also designed to determine the brake-specific emissions of non-methane hydrocarbons. The test consists of three different test cycles which are application specific for engines which span the typical operating range of nonroad spark-ignition engines. Two cycles exist for Class I-B, I and II engines and one is for Class I-A, III, IV, and V engines (see § 90.103(a) and § 90.116(b) for the definitions of Class I-A, I-B, and I—V engines). The test cycles for Class I-B, I, and II engines consist of one idle mode and five power modes at one speed (rated or intermediate). The test cycle for Class I-A, III, IV, and V engines consists of one idle mode at idle speed and one power mode at rated speed. These procedures require the determination of the concentration of each pollutant, fuel flow, and the power output during each mode. The measured values are weighted and used to calculate the grams of each pollutant emitted per brake kilowatt hour (g/kW-hr).

(c)(1) When an engine is tested for exhaust emissions the complete engine must be tested, with all emission control devices installed and functioning.

(2) On air cooled engines, the cooling fan must be installed. For engines whose cooling fan serves a dual purpose, such as an air pump/blower, an external fan may be used to provide the engine with cooling air and the original cooling fan may be removed.

(d) All emission control systems installed on or incorporated in the application must be functioning during all procedures in this subpart. In case of component malfunction or failure, no maintenance is allowed without prior approval from the Administrator, in accordance with § 90.119.

[60 FR 34598, July 3, 1995, as amended at 64 FR 15244, Mar. 30, 1999; 65 FR 24312, Apr. 25, 2000]

§ 90.405 Recorded information.

(a) Record the information described in this section for each test, where applicable.

(b) *Test data; general.* (1) Engine identification number.

(2) Engine emission control system.

(3) Test operator(s).

(4) Number of hours of operation accumulated on the engine prior to beginning the warm-up portion of the test (to the nearest tenth hour).

(5) Fuel identification.

(6) For 2-stroke engines, fuel/oil mixture ratio.

(7) Date of most recent analyzer bench calibration.

(8) All pertinent instrument information such as tuning, gain, serial numbers, detector number, and calibration curve(s). As long as this information is traceable, it may be summarized by system number or analyzer identification numbers.

(c) *Test data; pre-test.* (1) Date and time of day.

(2) Test number.

(3) Barometric pressure; as an option, barometric pressure can be measured as a modal measurement instead of or in addition to a pre- and post-test measurement.

(4) Recorder chart or equivalent. Identify for each test segment zero traces for each range used, and span traces for each range used.

(d) *Test data; modal.* (1) Recorder chart or equivalent. Identify for each test mode the emission concentration traces and the associated analyzer range(s).

(2) Observed engine torque.

(3) Observed engine rpm.

(4) Intake air flow if applicable.

(5) Test cell temperature and humidity for each mode.

(6) For raw gas testing; fuel flow for each mode. Fuel flow measurement is not required for dilute testing, but is allowed. If the fuel flow measurement is a volume measurement system, record the fuel temperature in the measurement system for fuel density corrections to the mass flow rate. If the fuel temperature is within 3 °C of the calibration temperature, no density correction is required.

(7) Engine intake temperature and humidity, if applicable.

(8) Exhaust mixing chamber surface temperature, if applicable.

(9) Exhaust sample line temperature, if applicable.

(e) *Test data; post-test.* (1) Recorder chart or equivalent. Identify the hang-up check.

(2) Recorder chart or equivalent. Identify the zero traces for each range used and the span traces for each range used.

(3) Total number of hours of operation accumulated on the engine (to the nearest tenth hour).

(4) Barometric pressure, post-test segment.

[60 FR 34598, July 13, 1995, as amended at 70 FR 40449, July 13, 2005]

§ 90.406 Engine parameters to be measured and recorded.

Measure or calculate, then record the engine parameters in table 1 in appendix A of this subpart.

§ 90.407 Engine inlet and exhaust systems.

(a) The engine manufacturer is liable for exhaust emission compliance over the full range of air inlet filter systems and exhaust muffler systems.

(b) The air inlet filter system and exhaust muffler system combination used on the test engine must be the systems expected to yield the highest emission levels.

§ 90.408 Pre-test procedures.

(a) *Engine service accumulation and stabilization procedure.* Use the service accumulation procedure determined by the manufacturer for exhaust emission stabilizing of an engine, consistent with good engineering practice (see § 90.118).

(1) The manufacturer determines, for each engine family, the number of hours at which the engine exhaust emission control system combination is stabilized for emission testing. However, this stabilization procedure may not exceed 12 hours. The manufacturer must maintain, and provide to the Administrator upon request, a record of the rationale used in making this determination. If the manufacturer can document that at some time prior to the full 12 hour service accumulation

period the engine emissions are decreasing for the remainder of the 12 hours, the service accumulation may be completed at that time. The manufacturer may elect to accumulate 12 hours on each test engine within an engine family without making this determination.

(2) During service accumulation, the fuel and lubricants specified in § 90.308 must be used.

(3) Engine maintenance during service accumulation is allowed only in accordance with § 90.118.

(b) *Engine pre-test preparation.* (1) Drain and charge the fuel tank(s) with the specified test fuel (see § 90.308(b)) to 50 percent of the tank's nominal capacity. If an external fuel tank is used, the engine fuel inlet system pressure must be typical of what the engine will see in use.

(2) An evaluation of the effects of test measurement systems on engine emissions shall be conducted using good engineering judgment to ensure that such test systems do not significantly impact exhaust emissions from the engine. For example, this would require evaluation of all types of emission sampling systems, and of fuel- and air-flow measurement systems for raw sampling. This can be accomplished by operating the engine at the highest engine torque value that will be encountered on the test cycle before and after such test systems are installed to ensure that the impact on measured torque is less than 5 percent. This may also be accomplished by measuring air-to-fuel ratio using a zirconia universal exhaust gas oxygen (UEGO) sensor to ensure that the impact on measured air-to-fuel ratio is less than 5 percent at the highest engine torque value that will be encountered on the test cycle before and after such test systems are installed. The impact of air- and fuel-flow measurement systems may be evaluated based on an engineering analysis of the impact of the change in pressure induced on air-intake pressure and fuel supply pressure by these measurement systems. While this would typically be done before testing, it may also be done as a post-test verification.

(c) *Analyzer pre-test procedures.* (1) If necessary, warm up and stabilize the analyzer(s) before calibrations are performed.

(2) Replace or clean the filter elements and then leak check the system as required by § 90.324(a). If necessary, allow the heated sample line, filters, and pumps to reach operating temperature.

(3) Perform the following system checks:

(i) If necessary, check the sample-line temperature. Heated FID sample line temperature must be maintained between 110 °C and 230 °C; a heated NO_X sample line temperature must be maintained between 60 °C and 230 °C.

(ii) Check that the system response time has been accounted for prior to sample collection data recording.

(iii) A HC hang-up check is permitted (see § 90.413(e)).

(4) Check analyzer zero and span before and after each test at a minimum. Further, check analyzer zero and span any time a range change is made or at the maximum demonstrated time span for stability for each analyzer used.

(d) Check system flow rates and pressures and reset, if necessary.

[60 FR 34598, July 3, 1995, as amended at 65 FR 24312, Apr. 25, 2000; 70 FR 40449, July 13, 2005]

§ 90.409 Engine dynamometer test run.

(a) *Engine and dynamometer start-up.* (1) Only adjustments in accordance with § 90.119 may be made to the test engine prior to starting a test.

(2) If necessary, warm up the dynamometer as recommended by the dynamometer manufacturer or use good engineering practice.

(3) For Phase 1 engines, at the manufacturer's option, the engine can be run with the throttle in a fixed position or by using the engine's governor (if the engine is manufactured with a governor). In either case, the engine speed and load must meet the requirements specified in paragraph (b)(12) of this section. For Phase 2 Class I, Phase 2 Class I-B, and Phase 2 Class II engines equipped with an engine speed governor, the governor must be used to control engine speed during all test cycle modes except for Mode 1 or Mode 6, and no external throttle control may

be used that interferes with the function of the engine's governor; a controller may be used to adjust the governor setting for the desired engine speed in Modes 2–5 or Modes 7–10; and during Mode 1 or Mode 6 fixed throttle operation may be used to determine the 100 percent torque value.

(b) Each test consists of the following steps.

(1) Record the general test data as specified in § 90.405(b).

(2) Precondition the engine in the following manner;

(i) Operate the engine at a power greater than or equal to 50 percent maximum power at the appropriate speed (rated or intermediate) for 20 minutes;

(ii) Option. If the engine has been operating on service accumulation for a minimum of 40 minutes, the service accumulation may be substituted for step (i).

(3) Record all pre-test data specified in § 90.405(c).

(4) Start the test cycle (see § 90.410) within five minutes of the completion of the steps required by paragraph (b)(2) of this section.

(5) Modes are to be performed in the numerical order specified for the appropriate test cycle (see ''Mode Points'' Table 2 in Appendix A of this subpart).

(6) For Class I, I-B, and II engines, during the maximum torque mode calculate the torque corresponding to 75, 50, 25, and 10 percent of the maximum observed torque (see Table 2 in Appendix A to this subpart).

(7) Once engine speed and load are set for a mode, run the engine for a sufficient period of time to achieve thermal stability. At the manufacturer's option, determine and document the appropriate criterion for thermal stability for each engine family. If the manufacture chooses not to make this determination, an acceptable alternative is to run the engine at each mode until the cylinder head temperature remains within a 10 °C bandwidth for three minutes. Cylinder head temperature may be measured at the base of the spark plug. After stability is achieved, emission measurements are initiated.

(8) Record all modal data specified in § 90.405(d) for a minimum time period of the last two minutes of each mode. Longer averaging periods are acceptable, but the data averaged must be from a continuous time period. The duration of time during which this data is recorded is referred to as the ''sampling period.'' The data collected during the sampling period is used for modal emission calculations.

(9) Continuously record the analyzer's response to the exhaust gas during each mode.

(10) Modes may be repeated.

(11) If a delay of more than one hour occurs between the end of one mode and the beginning of another mode, the test is void and must be restarted at paragraph (b)(1) of this section.

(12) The engine speed and load must be maintained within the requirements of § 90.410 during the sampling period of each mode. If this requirement is not met, the mode is void and must be restarted.

(13) If at any time during a mode the test equipment malfunctions or the specifications in § 90.410 can not be met, the test is void and must be aborted. Corrective action should be taken and the test restarted.

(14) If at any time during an operating mode the engine stalls, restart the engine immediately and continue the test starting with the steps required by paragraph (b)(6) of this section. If the engine will not restart within five minutes the test is void. If maintenance is required on the engine, advance approval from the Administrator is required as specified in § 90.119. After corrective action is taken, the engine may be rescheduled for testing. Report the reason for the malfunction (if determined) and the corrective action taken.

(15) Fuel flow and air flow during the idle condition may be determined just prior to or immediately following the dynamometer sequence, if longer times are required for accurate measurements. If the dilute sampling method (Constant Volume Sampling) is used, neither fuel flow nor air flow measurements are required.

(c) *Exhaust gas measurements.* (1) Measure HC, CO, CO_2, and NO_X concentrations in the exhaust sample. Use the same units and modal calculations as for your other results to report a

single weighted value for CO_2; round CO_2 to the nearest 1 g/kW–hr.

(2) Each analyzer range that may be used during a test mode must have the zero and span responses recorded prior to the start of the test. Only the range(s) used to measure the emissions during the test is required to have its zero and span recorded after the completion of the test. Depending on the stability of each individual analyzer, more frequent zero checks or spans between modes may be necessary.

(3) It is permitted to change filter elements between modes.

(4) A leak check is permitted between modes.

(5) A hang-up check is permitted between modes (see § 90.413).

(6) If, during the emission measurement portion of a mode, the value of the gauges downstream of the NDIR analyzer(s) G3 or G4 (see Figure 1 in Appendix B of this subpart), differs by more than ±0.5kPa from the pretest value, the test mode is void.

[60 FR 34598, July 3, 1995, as amended at 64 FR 15244, Mar. 30, 1999; 65 FR 24313, Apr. 25, 2000; 70 FR 40449, July 13, 2005; 74 FR 56374, Oct. 30, 2009]

§ 90.410 Engine test cycle.

(a) Follow the appropriate 6-mode test cycle for Class I, I-B and II engines and 2-mode test cycle for Class I-A, III, IV, and V engines when testing spark-ignition engines (see Table 2 in Appendix A of this subpart).

(b) For Phase 1 engines and Phase 2 Class I-A, III, IV, and V, and Phase 2 Class I and II engines not equipped with an engine speed governor, during each non-idle mode, hold both the specified speed and load within ±five percent of point. During the idle mode, hold speed within ±ten percent of the manufacturer's specified idle engine speed. For Phase 2 Class I, I-B, and II engines equipped with an engine speed governor, during Mode 1 or Mode 6 hold both the specified speed and load within ±five percent of point, during Modes 2–3, or Modes 7–8 hold the specified load with ±five percent of point, during Modes 4–5 or Modes 9–10, hold the specified load within the larger range provided by ±0.27 Nm (±0.2 lb-ft), or ±ten (10) percent of point, and during the idle mode hold the specified speed within ±ten percent of the manufacturer's specified idle engine speed (see Table 1 in Appendix A of this subpart for a description of test Modes). The use of alternative test procedures is allowed if approved in advance by the Administrator.

(c) If the operating conditions specified in paragraph (b) of this section for Class I, I-B, and II engines using Mode Points 2, 3, 4, and 5 cannot be maintained, the Administrator may authorize deviations from the specified load conditions. Such deviations may not exceed 10 percent of the maximum torque at the test speed. The minimum deviations, above and below the specified load, necessary for stable operation shall be determined by the manufacturer and approved by the Administrator prior to the test run.

(d) Do not include power generated during the idle mode, Mode 11, in the calculation of emission results.

[60 FR 34598, July 3, 1995, as amended at 64 FR 15244, Mar. 30, 1999; 65 FR 24313, Apr. 25, 2000]

§ 90.411 Post-test analyzer procedures.

(a) Perform a HC hang-up check within 60 seconds of the completion of the last mode in the test. Use the following procedure:

(1) Introduce a zero gas or room air into the sample probe or valve V2 (see Figure 2 in Appendix B of Subpart D) to check the ''hangup zero'' response. Simultaneously start a time measurement.

(2) Select the lowest HC range used during the test.

(3) Within four minutes of beginning the time measurement in paragraph (a)(1) of this section, the difference between the zero gas response and the hang-up zero response may not be greater than 5.0 percent of full scale or 10 ppmC, whichever is greater.

(b) Begin the analyzer span checks within six minutes after the completion of the last mode in the test. Record for each analyzer the zero and span response for each range used during the preceding test or test segment.

(c) If during the test, the filter element(s) were replaced or cleaned, a vacuum check must be performed per § 90.324(a) immediately after the span checks. If the vacuum side leak check

does not meet the requirements of § 90.324(a), the test is void.

(d) Read and record the post-test data specified in § 90.405(e).

(e) For a valid test, the analyzer drift between the before-segment and after-segment span checks for each analyzer must meet the following requirements:

(1) The span drift (defined as the change in the difference between the zero response and the span response) may not exceed two percent of full-scale chart deflection for each range used.

(2) The zero response drift may not exceed two percent of full-scale chart deflection for each range used above 155 ppm (or ppm C), or three percent of full-scale chart deflection for each range below 155 ppm (or ppm C).

§ 90.412 Data logging.

(a) A computer or any other automatic data collection (ADC) device(s) may be used as long as the system meets the requirements of this subpart.

(b) Determine from the data collection records the analyzer responses corresponding to the end of each mode.

(c) Record data at a minimum of rate of one Hz (one time per second).

(d) Determine the final value for power by averaging the individually calculated power points for each value of speed and torque recorded during the sampling period. As an alternative, the final value for power can be calculated from the average values for speed and torque, collected during the sampling period.

(e) Determine the final value for CO_2, CO, HC, and NO_X concentrations by averaging the concentration of each point taken during the sample period for each mode.

§ 90.413 Exhaust sample procedure—gaseous components.

(a) *Automatic data collection equipment requirements.* The analyzer response may be read by automatic data collection (ADC) equipment such as computers, data loggers, and so forth. If ADC equipment is used, the following is required:

(1) For dilute grab (''bag'') sample analysis, the analyzer response must be stable at greater than 99 percent of the final reading for the dilute exhaust sample. The ADC must store a single value representing the average chart deflection over a 10-second stabilized period. Alternatively, the ADC may store the individual instantaneous chart deflections collected over a 10-second stabilized period.

(2) For continuous analysis systems, the ADC must store a single value representing the average integrated concentration over a measurement period. Alternatively, the ADC may store the individual instantaneous values collected during the measurement period.

(3) The chart deflections or average integrated concentrations required in paragraphs (a)(1) and (a)(2) of this section may be stored on long-term computer storage devices such as computer tapes, storage discs, punch cards, or they may be printed in a listing for storage. In either case a chart recorder is not required and records from a chart recorder, if they exist, need not be stored.

(4) If ADC equipment is used to interpret analyzer values, the ADC equipment is subject to the calibration specifications of the analyzer as if the ADC equipment is part of analyzer system.

(b) Data records from any one or a combination of analyzers may be stored as chart recorder records.

(c) *Grab sample analysis.* For dilute grab sample analysis perform the following procedure:

(1) Calibrate analyzers using the procedure described in § 90.326.

(2) Record the most recent zero and span response as the pre-analysis values.

(3) Measure and record HC, CO, CO_2, and NO_X concentrations in the exhaust sample bag(s) and background sample bag(s) using the same flow rates and pressures.

(4) Good engineering practice dictates that exhaust emission sample bag analyzer readings below 15 percent of full scale should generally not be used.

(5) A post-analysis zero and span calibration check of each range must be performed and the values recorded. The number of events that may occur between the pre- and post-checks is not specified. However, the difference between pre-analysis zero and span values (recorded in paragraph (c)(2) or

(c)(3) of this section) versus those recorded for the post-analysis check may not exceed the zero drift limit or the span drift limit of two percent of full-scale chart deflection for any range used. Otherwise the analysis is void.

(d) *Continuous sample analysis.* For continuous sample analysis perform the following procedure:

(1) Calibrate analyzers using the procedure described in § 90.326.

(2) Leak check portions of the sampling system that operate at negative gauge pressures when sampling and allow heated sample lines, filters, pumps, and so forth to stabilize at operating temperature.

(3) Option: Determine the HC hang-up for the FID or HFID sampling system:

(i) Zero the analyzer using zero gas introduced at the analyzer port.

(ii) Flow zero gas through the overflow sampling system. Check the analyzer response.

(iii) If the overflow zero response exceeds the analyzer zero response by two percent or more of the FID or HFID full-scale deflection, hang-up is indicated and corrective action must be taken (see paragraph (e) of this section).

(iv) The complete system hang-up check specified in paragraph (e) of this section is recommended as a periodic check.

(4) If necessary, recalibrate analyzer using the procedure specified in paragraph (d)(1) of this section.

(5) Good engineering practice dictates that analyzers used for continuous analysis should be operated such that the measured concentration falls between 15 percent and 100 percent of full scale.

(6) Record the most recent zero and span response as the pre-analysis values.

(7) Collect background HC, CO, CO_2, and NO_X in a sample bag (for dilute exhaust sampling only, see § 90.422).

(8) Perform a post-analysis zero and span check for each range used at the conditions specified in paragraph (d)(1) of this section. Record these responses as the post-analysis values.

(9) Neither the zero drift nor the span drift between the pre-analysis and post-analysis checks on any range used may exceed three percent for HC, or two percent for NO_X. CO, and CO_2, of full-scale chart deflection, or the test is void. (If the HC drift is greater than three percent of full-scale chart deflection, HC hang-up is likely.)

(10) Determine background levels of HC, NO_X. CO, or CO_2 (for dilute exhaust sampling only) by the grab (''bag'') technique outlined in paragraph (c) of this section.

(e) *Hydrocarbon hang-up.* If HC hang-up is indicated, the following procedure may be performed:

(1) Fill a clean, evacuated sample bag with background air.

(2) Zero and span the HFID at the analyzer ports.

(3) Analyze the background air sample bag through the analyzer ports.

(4) Analyze the background air through the entire sample probe system.

(5) If the difference between the readings obtained is two ppm or more, clean the sample probe and the sample line.

(6) Reassemble the sample system, heat to specified temperature, and repeat the procedure in paragraphs (e)(1) through (e)(5) of this section.

§ 90.414 Raw gaseous exhaust sampling and analytical system description.

(a) *Schematic drawing.* An example of a sampling and analytical system which may be used for testing under this subpart is shown in Figure 2 in appendix B of subpart D. All components or parts of components that are wetted by the sample or corrosive calibration gases must be either chemically cleaned stainless steel or inert material (e.g., polytetrafluoroethylene resin). The use of ''gauge savers'' or ''protectors'' with nonreactive diaphragms to reduce dead volumes is permitted.

(b) *Sample probe.* (1) The sample probe must be a straight, closed end, stainless steel, multi-hole probe. The inside diameter may not be greater than the inside diameter of the sample line +0.03 cm. The wall thickness of the probe may not be greater than 0.10 cm. The fitting that attaches the probe to the exhaust pipe must be as small as practical in order to minimize heat loss from the probe.

(2) The probe must have a minimum of three holes. The spacing of the radial planes for each hole in the probe must be such that they cover approximately equal cross-sectional areas of the exhaust duct. See Figure 2 in appendix B of subpart D. The angular spacing of the holes must be approximately equal. The angular spacing of any two holes in one plane may not be 180° ±20° (i.e., section view C-C of Figure 2 in appendix B of subpart D). The holes should be sized such that each has approximately the same flow. If only three holes are used, they may not all be in the same radial plane.

(3) The exhaust gas probe must be located in a position which yields a well mixed, homogenous sample of the engine exhaust. The probe must extend radially across the exhaust gas stream. The probe must pass through the approximate center and must extend across at least 80 percent of the exhaust gas stream. The exact position of the probe may vary from engine family to engine family.

(c) *Mixing chamber*. The exhaust mixing chamber is located in the exhaust system between the muffler and the sample probe. The mixing chamber is an optional component of the raw gas sampling equipment.

(1) The internal volume of the mixing chamber may not be less than ten times the cylinder displacement of the engine under test. The shape of the mixing chamber must be such that it provides a well mixed, homogenous sample at the sample probe location.

(2) Couple the mixing chamber as closely as possible to the engine muffler.

(3) Maintain the inner surface of the mixing chamber at a minimum temperature of 179 °C.

(4) Thermocouple temperature monitoring of the mixing chamber inner surface is required to assure wall temperatures specified in paragraph (c)(3) of this section. The temperature measurement must be accurate to within ±5 °C.

(5) The sample probe must extend radially across the exit of the mixing chamber. The probe must pass through the approximate center and must extend across at least 80 percent of the diameter of the exit. The exact position of the probe may vary from engine family to engine family. The probe must be located in a position which yields a well mixed, homogenous sample of the exhaust.

(d) *Sample transfer line*. (1) The maximum inside diameter of the sample line may not exceed 1.32 cm.

(2) If valve V2 in Figure 1 of appendix B of this subpart is used, the sample probe must connect directly to valve V2. The location of optional valve V2 in Figure 1 of appendix B of subpart D may not be greater than 1.22 m from the exhaust duct.

(3) The location of optional valve V16, Figure 1 of appendix B of this subpart, may not be greater than 61 cm from the sample pump. The leakage rate for this section on the pressure side of the sample pump may not exceed the leakage rate specification for the vacuum side of the pump.

(e) *Venting*. All vents, including analyzer vents, bypass flow, and pressure relief vents, of regulators should be vented in such a manner as to avoid endangering personnel in the immediate area.

(f) Any variation from the specifications in this subpart, including performance specifications and emission detection methods, may be used only with prior approval by the Administrator.

(g) Additional components, such as instruments, valves, solenoids, pumps, switches, and so forth, may be employed to provide additional information and coordinate the functions of the component systems.

(h) The following requirements must be incorporated in each system used for raw testing under this subpart.

(1) Take the sample for all components with one sample probe and split it internally to the different analyzers.

(2) Heat the sample transport system from the engine exhaust pipe to the HC analyzer for the raw gas sampling method as indicated in Figure 1 in appendix B of this subpart. The NO_X analyzer for the raw gas sampling method may be heated as indicated in Figure 1 in appendix B of this subpart. The HC analyzer and the NO_X analyzer for the dilute sampling method may be heated as indicated in Figure 1 in appendix B of this subpart.

§ 90.415 Raw gaseous sampling procedures.

Fit all heated sampling lines with a heated filter to extract solid particles from the flow of gas required for analysis. The sample line for HC measurement must be heated. The sample line for CO, CO_2 and NO_X analysis may be heated or unheated.

§ 90.416 Intake air flow measurement specifications.

(a) If used, the engine intake air flow measurement method used must have a range large enough to accurately measure the air flow over the engine operating range during the test. Overall measurement accuracy must be two percent of full-scale value of the measurement device for all modes except the idle mode. For the idle mode, the measurement accuracy must be ±five percent or less of the full-scale value. The Administrator must be advised of the method used prior to testing.

(b) When an engine system incorporates devices that affect the air flow measurement (such as air bleeds, air injection, pulsed air, and so forth) resulting in understated exhaust emission results, make corrections to the exhaust emission results to account for such effects.

§ 90.417 Fuel flow measurement specifications.

(a) Fuel flow measurement is required only for raw testing. Fuel flow is allowed for dilute testing.

(b) The fuel flow measurement instrument must have a minimum accuracy of one percent of full-scale flow rate for each measurement range used. An exception is allowed for the idle mode. For this mode, the minimum accuracy is ±five percent of full-scale flow rate for the measurement range used. The controlling parameters are the elapsed time measurement of the event and the weight or volume measurement. You may apply the accuracy specifications of 40 CFR part 1065, subpart C, instead of those in this paragraph (b).

[70 FR 40449, July 13, 2005]

§ 90.418 Data evaluation for gaseous emissions.

For the evaluation of the gaseous emissions recording, record the last two minutes of each mode and determine the average values for HC, CO, CO_2 and NO_X during each mode from the average concentration readings determined from the corresponding calibration data. Longer averaging times are acceptable, but the reported sampling period must be a continuous set of data.

[70 FR 40449, July 13, 2005]

§ 90.419 Raw emission sampling calculations—gasoline fueled engines.

(a) Derive the final weighted brake-specific mass emission rates (g/kW-hr) through the steps described in this section.

(b) *Air and fuel flow method.* If both air and fuel flow mass rates are measured, use the following equations to determine the weighted emission values for the test engine:

$$W_{NO_X} = \left(G_{AIRD} + G_{FUEL}\right) \times \frac{M_{NO_2}}{M_{exh}} \times WNO_X \times K_H \times \frac{1}{10^6}$$

$$W_{HC} = \left(G_{AIRD} + G_{FUEL}\right) \times \frac{M_{HC_{exh}}}{M_{exh}} \times WHC \times \frac{1}{10^6}$$

$$W_{CO} = \left(G_{AIRD} + G_{FUEL}\right) \times \frac{M_{CO}}{M_{exh}} \times WCO \times \frac{1}{10^2}$$

Where:

W_{HC} = Mass rate of HC in exhaust [g/hr],

G_{AIRD} = Intake air mass flow rate on dry basis [g/hr],
G_{FUEL} = Fuel mass flow rate [g/hr],
M_{HCexh} = Molecular weight of hydrocarbons in the exhaust, see the following equation:

$$M_{HC_{exh}} = 12.01 + \alpha 1.008 + \beta 16.00$$

Where:

α = Hydrogen/carbon atomic ratio of the fuel
β = Oxygen/carbon atomic ratio of the fuel
M_{exh} = Molecular weight of the total exhaust, see the following equation:

$$M_{exh} = \frac{M_{HC_{exh}} \times WHC}{10^6} + \frac{28.01 \times WCO}{10^2} + \frac{44.01 \times WCO_2}{10^2} + \frac{46.01 \times WNO_X}{10^6} + \frac{32.00 \times WO_2}{10^2} + \frac{2.016 \times WH_2}{10^2} + 18.01 \times (1 - K) + \frac{+28.01 \times \left[100 - \frac{WHC}{10^4} - WCO - WCO_2 - \frac{WNO_X}{10^4} - WO_2 - WH_2 - 100 \times (1 - K)\right]}{10^2}$$

Where:

WHC = HC volume concentration in exhaust, ppmC wet
WCO = CO percent concentration in the exhaust, wet
DCO = CO percent concentration in the exhaust, dry
WCO_2 = CO_2 percent concentration in the exhaust, wet
DCO_2 = CO_2 percent concentration in the exhaust, dry
WNO_X = NO volume concentration in exhaust, ppm wet
WO_2 = O_2 percent concentration in the exhaust, wet
WH_2 = H_2 percent concentration in exhaust, wet
K = correction factor to be used when converting dry measurements to a wet basis. Therefore, wet concentration=dry concentration × K,
where K is:

$$K = \frac{1}{1 + 0.005 \times (DCO + DCO_2) \times \alpha - 0.01 DH_2}$$

DH_2 = H_2 percent concentration in exhaust, dry, calculated from the following equation:

$$DH_2 = \frac{0.5 \times \alpha \times DCO \times (DCO + DCO_2)}{DCO + (3 \times DCO_2)}$$

W_{co} = Mass rate of CO in exhaust, [g/hr]
M_{co} = Molecular weight of CO=28.01
W_{NOx} = Mass rate of NO_X in exhaust, [g/hr]
M_{NO2} = Molecular weight of NO_2=46.01
K_H = Factor for correcting the effects of humidity on NO_2 formation for 4-stroke gasoline small engines, as follows:

$K_H = (9.953 \times H + 0.832)$

Where:

H = the amount of water in an ideal gas; 40 CFR 1065.645 describes how to determine this value (referred to as x_{H_2O}).
K_H = 1 for two-stroke gasoline engines.

(c) *Fuel flow method.* The following equations are to be used when fuel flow is selected as the basis for mass emission calculations using the raw gas method.

$$W_{HC} = \frac{M_{HC_{exh}}}{M_F} \times \frac{G_{FUEL}}{TC} \times \frac{WHC}{10^4}$$

$$W_{CO} = \frac{M_{CO}}{M_F} \times \frac{G_{FUEL}}{TC} \times WCO$$

$$W_{NO_X} = \frac{M_{NO_X}}{M_F} \times \frac{G_{FUEL}}{TC} \times \frac{WNO_X}{10^4} \times K_H$$

Where:

W_{HC} = Mass rate of HC in exhaust, [g/hr]

M_{HCexh} = Molecular weight of hydrocarbons in the exhaust, see following equation:

$$M_{HC_{exh}} = M_C + \alpha M_H + \beta M_O$$

M_C = Molecular weight of carbon=12.01 [g/mole]

M_H = Molecular weight of hydrogen=1.008 [g/mole]

M_O = Molecular weight of oxygen=16.00 [g/mole]

α = Hydrogen to carbon ratio of the test fuel

β = Oxygen to carbon ratio of the test fuel

M_F = Molecular weight of test fuel

G_{FUEL} = Fuel mass flow rate, [g/hr]

TC=Total carbon in exhaust, see following equation:

$$TC = WCO + WCO_2 + \frac{WHC}{10^4}$$

WCO = CO percent concentration in the exhaust, wet

WCO_2 = CO_2 percent concentration in the exhaust, wet

DCO = CO percent concentration in the exhaust, dry

DCO_2 = CO_2 percent concentration in the exhaust, dry

WHC = HC volume concentration in exhaust, ppmC wet

WNO_X = NO_X volume concentration in exhaust, ppm wet

K = correction factor to be used when converting dry measurements to a wet basis. Therefore, wet concentration=dry concentration×K, where K is:

$$K = \frac{1}{1 + 0.005 \times (DCO + DCO_2) \times \alpha - 0.01\, DH_2}$$

DH_2 = H_2 percent concentration in exhaust, dry, calculated from the following equation:

$$DH_2 = \frac{0.5 \times \alpha \times DCO \times (DCO + DCO_2)}{DCO + (3 \times DCO_2)}$$

W_{CO} = Mass rate of CO in exhaust, [g/hr]

M_{CO} = Molecular weight of CO = 28.01

WNO_X = Mass rate of NO_X in exhaust, [g/hr]

MNO_2 = Molecular weight of NO_2=46.01

K_H = Factor for correcting the effects of humidity on NO_2 formation for 4-stroke gasoline small engines, as follows:

$K_H = (9.953 \times H + 0.832)$

Where:

H = the amount of water in an ideal gas; 40 CFR 1065.645 describes how to determine this value (referred to as x_{H_2O}).

K_H = 1 for two-stroke gasoline engines.

(d) Calculate the final weighted brake-specific emission rate for each individual gas component using the following equation:

$$A_{WM} = \frac{\sum_i^n (W_i \times WF_i)}{\sum_i^n (P_i \times WF_i)}$$

Where:

A_{WM} = Final weighted brake-specific mass emission rate (HC, CO, NO_X) [g/kW-hr]

W_i = Mass emission rate during mode i [g/hr]

WF_i = Weighting factors for each mode according to § 90.410(a)

P_i = Gross average power generated during mode i [kW], calculated from the following equation,

$$P_i \frac{2\pi}{60{,}000} \times speed \times torque$$

Where:

speed = average engine speed measured during mode i [rev./minute]

torque = average engine torque measured during mode i [N-m]

[60 FR 34598, July 13, 1995, as amended at 70 FR 40449, July 13, 2005]

§ 90.420 CVS concept of exhaust gas sampling system.

(a) A dilute exhaust sampling system is designed to directly measure the true mass of emissions in engine exhaust without the necessity of measuring either fuel flow or intake air flow. This is accomplished by diluting the exhaust produced by a test engine with ambient background air and measuring the total diluted exhaust flow rate and the concentration of emissions within the dilute flow. Total mass flow of an emission is then easily calculated.

(b) A constant volume sampler (CVS) is typically used to control the total amount of dilute flow through the system. As the name implies, a CVS restricts flow to a known value dependent only on the dilute exhaust temperature and pressure.

(c) For the testing described in this subpart, a CVS must consist of: a mixing tunnel into which the engine exhaust and dilutant (background) air are dumped; a dilute exhaust flow metering system; a dilute exhaust sample port; a background sample port; a dilute exhaust sampling system; and a background sampling system.

(1) *Mixing tunnel.* The mixing tunnel must be constructed such that complete mixing of the engine exhaust and background air is assured prior to the sampling probe.

(2) *Exhaust flow metering system.* A dilute exhaust flow metering system must be used to control the total flow rate of the dilute engine exhaust as described in § 90.421.

(3) *Exhaust sample port.* A dilute exhaust sample port must be located in or downstream of the mixing tunnel at a point where complete mixing of the engine exhaust and background air is assured.

(4) *Background sample port.* A dilute exhaust sample port must be located in the stream of background air before it is mixed with the engine exhaust. The background probe must draw a representative sample of the background air during each sampling mode.

(5) *Exhaust sampling system.* The dilute exhaust sampling system controls the flow of samples from the mixing tunnel to the analyzer system. This could be either a continuous sampling system or grab (bag) sampling system. If a critical flow venturi (CFV) is used on the dilute exhaust sample probe, this system must assure that the sample CFV is in choke flow during testing. If no CFV is used, this system must assure a constant volumetric flow rate through the dilute exhaust sample probe or must incorporate electronic flow compensation.

(6) *Background sampling system.* The background sampling system controls the flow of samples from the background air supply to the analyzer system. This could be either a continuous sampling system or grab (bag) sampling system. This system must assure a constant volumetric flow rate through the background sample probe.

§ 90.421 Dilute gaseous exhaust sampling and analytical system description.

(a) *General.* The exhaust gas sampling system described in this section is designed to measure the true mass of gaseous emissions in the exhaust of nonroad small spark-ignition engines. This system utilizes the Constant Volume Sampling (CVS) concept (described in § 90.420) of measuring mass emissions of HC, NO_X. CO, and CO_2. Grab sampling for individual modes is an acceptable method of dilute testing for all constituents, HC, NO_X. CO, and CO_2. Continuous dilute sampling is not required for any of the exhaust constituents, but is allowable for all. Heated sampling is not required for any of the constituents, but is allowable for HC and NO_X. The mass of gaseous emissions is determined from the sample concentration and total flow over the test period. As an option, the measurement of total fuel mass consumed over a cycle may be substituted for the exhaust measurement of CO_2. General requirements are as follows:

(1) This sampling system requires the use of a Positive Displacement Pump—Constant Volume Sampler (PDP-CVS) system with a heat exchanger, or a Critical Flow Venturi—Constant Volume Sampler (CFV-CVS) system with CFV sample probes and/or a heat exchanger or electronic flow compensation. Figure 2 in Appendix B of this subpart is a schematic drawing of the PDP-CVS system. Figure 3 in Appendix

B of this subpart is a schematic drawing of the CFV-CVS system.

(2) The HC analytical system requires:

(i) Grab sampling (see § 90.420, and Figure 2 or Figure 3 in Appendix B of this subpart) and analytical capabilities (see § 90.423, and Figure 4 in Appendix B of this subpart), or

(ii) Continuously integrated measurement of diluted HC meeting the minimum requirements and technical specifications contained in paragraph (b)(2) of this section.

(iii) The dilute HC analytical system for nonroad small spark-ignition engines does not require a heated flame ionization detector (HFID).

(iv) If used, the HFID sample must be taken directly from the diluted exhaust stream through a heated probe and integrated continuously over the test cycle.

(v) The heated probe must be located in the sampling system far enough downstream of the mixing area to ensure a uniform sample distribution across the CVS duct at the sampling zone.

(3) The CO and CO_2 analytical system requires:

(i) Grab sampling (see § 90.420, and Figure 2 or Figure 3 in Appendix B of this subpart) and analytical capabilities (see § 90.423, and Figure 4 in Appendix B of this subpart), or

(ii) Continuously integrated measurement of diluted CO and CO_2 meeting the minimum requirements and technical specifications contained in paragraph (b)(4) of this section.

(4) The NO_X analytical system requires:

(i) Grab sampling (see § 90.420, and Figure 2 or Figure 3 in Appendix B of this subpart) and analytical capabilities (see § 90.423, and Figure 4 in Appendix B of this subpart), or

(ii) A continuously integrated measurement of diluted NO_X meeting the minimum requirements and technical specifications contained in paragraph (b)(4) of this section.

(5) Since various configurations can produce equivalent results, exact conformance with these drawings is not required. Additional components such as instruments, valves, solenoids, pumps, and switches may be used to provide additional information and coordinate the functions of the component systems. Other components, such as snubbers, which are not needed to maintain accuracy on some systems, may be excluded if their exclusion is based upon good engineering judgment.

(6) Other sampling and/or analytical systems may be used if shown to yield equivalent results and if approved in advance by the Administrator.

(b) *Component description.* The components necessary for exhaust sampling must meet the following requirements:

(1) *Exhaust dilution system.* The PDP-CVS must conform to all of the requirements listed for the exhaust gas PDP-CVS in § 90.420 of this chapter. The CFV-CVS must conform to all of the requirements listed for the exhaust gas CFV-CVS in § 90.420 of this chapter. In addition, the CVS must conform to the following requirements:

(i) The flow capacity of the CVS must be sufficient to maintain the diluted exhaust stream in the dilution system at a temperature of 190 °C or less at the sampling zone for hydrocarbon measurement and as required to prevent condensation at any point in the dilution system. Gaseous emission samples may be taken directly from this sampling point.

(ii) For the CFV-CVS, either a heat exchanger or electronic flow compensation is required (see Figure 3 in Appendix B of this subpart).

(iii) For the CFV-CVS when a heat exchanger is used, the gas mixture temperature, measured at a point immediately ahead of the critical flow venturi, must be within ±11 °C of the average operating temperature observed during the test with the simultaneous requirement that condensation does not occur. The temperature measuring system (sensors and readout) must have an accuracy and precision of ±2 °C. For systems utilizing a flow compensator to maintain proportional flow, the requirement for maintaining constant temperature is not necessary.

(2) *Continuous HC measurement system.* (i) The continuous HC sample system (as shown in Figure 2 or 3 in Appendix B of this subpart) uses an ''overflow'' zero and span system. In this type of system, excess zero or span gas spills

out of the probe when zero and span checks of the analyzer are made.

(ii) No other analyzers may draw a sample from the continuous HC sample probe, line, or system, unless a common sample pump is used for all analyzers and the sample line system design reflects good engineering practice.

(iii) The overflow gas flow rates into the sample line must be at least 105 percent of the sample system flow rate.

(iv) The overflow gases must enter the sample line as close as practical to the outside surface of the CVS duct or dilution system.

(v) The continuous HC sampling system consists of a probe (which for a HFID analyzer must raise the sample to the specified temperature) and, where used, a sample transfer system (which for a HFID must maintain the specified temperature). The HFID continuous hydrocarbon sampling system (exclusive of the probe) must:

(A) Maintain a wall temperature of 190 ±11 °C as measured at every separately controlled heated component (that is, filters, heated line sections), using permanent thermocouples located at each of the separate components.

(B) Have a wall temperature of 190 ±11 °C over its entire length. The temperature of the system is demonstrated by profiling the thermal characteristics of the system where possible at initial installation and after any major maintenance performed on the system. The profiling is to be accomplished using the insertion thermocouple probing technique. The system temperature must be monitored continuously during testing at the locations and temperature described in § 90.421(b)(2).

(C) Maintain a gas temperature of 190 ±11 °C immediately before the heated filter and HFID. Determine these gas temperatures by a temperature sensor located immediately upstream of each component.

(vi) The continuous hydrocarbon sampling probe:

(A) Is defined as the first 25.4 to 76.2 cm of the continuous hydrocarbon sampling system.

(B) Has a 0.483 cm minimum inside diameter.

(C) Is installed in the dilution system at a point where the dilution air and exhaust are well mixed and provide a homogenous mixture.

(D) Is sufficiently distant (radially) from other probes and the system wall so as to be free from the influence of any wakes or eddies.

(E) For a continuous HFID sample probe, the probe must increases the gas stream temperature to 190 ±11 °C at the exit of the probe. Demonstrate the ability of the probe to accomplish this using the insertion thermocouple technique at initial installation and after any major maintenance. Demonstrate compliance with the temperature specification by continuously recording during each test the temperature of either the gas stream or the wall of the sample probe at its terminus.

(vii) The response time of the continuous measurement system must be taken into account when logging test data.

(3) *Sample mixing*. (i) Configure the dilution system to ensure a well mixed, homogeneous sample prior to the sampling probe(s).

(ii) Make the temperature of the diluted exhaust stream inside the dilution system sufficient to prevent water condensation.

(iii) Direct the engine exhaust downstream at the point where it is introduced into the dilution system.

(4) *Continuously integrated NO_X, CO, and CO_2 measurement systems*—(i) *Sample probe requirements:*

(A) The sample probe for continously intergrated NO_X. CO, and CO_2 must be in the same plane as the continuous HC probe, but sufficiently distant (radially) from other probes and the tunnel wall so as to be free from the influences of any wakes or eddies.

(B) The sample probe for continously intergrated NO_X. CO, and CO_2 must be heated and insulated over the entire length, to prevent water condensation, to a minimum temperature of 55 °C. Sample gas temperature immediately before the first filter in the system must be at least 55 °C.

(ii) Conform to the continuous NO_X, CO, or CO_2 sampling and analysis system to the specifications of 40 CFR 1065.145, with the following exceptions and revisions:

(A) Heat the system components requiring heating only to prevent water

condensation, the minimum component temperature is 55 °C.

(B) Coordinate analysis system response time with CVS flow fluctuations and sampling time/test cycle offsets, if necessary.

(C) Use only analytical gases conforming to the specifications of § 90.312 of this subpart for calibration, zero and span checks.

(D) Use a calibration curve conforming to § 90.321 for CO and CO_2 and § 90.318 for NO_X for any range on a linear analyzer below 155 ppm.

(iii) Convert the chart deflections or voltage output of analyzers with nonlinear calibration curves to concentration values by the calibration curve(s) specified in § 90.321 of this chapter before flow correction (if used) and subsequent integration takes place.

[60 FR 34598, July 3, 1995, as amended at 70 FR 40450, July 13, 2005]

§ 90.422 Background sample.

(a) Background samples are produced by drawing a sample of the dilution air during the exhaust collection phase of each test cycle mode.

(1) An individual background sample may be produced and analyzed for each mode. Hence, a unique background value will be used for the emission calculations for each mode.

(2) Alternatively, a single background sample may be produced by drawing a sample during the collection phase of each test cycle mode. Hence, a single cumulative background value will be used for the emission calculations for each mode.

(b) For analysis of the individual sample described in paragraph (a)(1) of this section, a single value representing the average chart deflection over a 10-second stabilized period must be stored. All readings taken during the data logging period must be stable within ±one percent of full scale.

(c) Measure HC, CO, CO_2, and NO_X exhaust and background concentrations in the sample bag(s) with approximately the same flow rates and pressures used during calibration.

§ 90.423 Exhaust gas analytical system; CVS grab sample.

(a) *Schematic drawings.* Figure 4 in Appendix B of this subpart is a schematic drawing of the exhaust gas analytical systems used for analyzing CVS grab ''bag'' samples from spark-ignition engines. Since various configurations can produce accurate results, exact conformance with the drawing is not required. Additional components such as instruments, valves, solenoids, pumps and switches may be used to provide additional information and coordinate the functions of the component systems. Other components such as snubbers, which are not needed to maintain accuracy in some systems, may be excluded if their exclusion is based upon good engineering judgment.

(b) *Major component description.* The analytical system, Figure 4 in Appendix B of this subpart, consists of a flame ionization detector (FID) or a heated flame ionization detector (HFID) for the measurement of hydrocarbons, non-dispersive infrared analyzers (NDIR) for the measurement of carbon monoxide and carbon dioxide, and a chemiluminescence detector (CLD) (or heated CLD (HCLD)) for the measurement of oxides of nitrogen. The exhaust gas analytical system must conform to the following requirements:

(1) The CLD (or HCLD) requires that the nitrogen dioxide present in the sample be converted to nitric oxide before analysis. Other types of analyzers may be used if shown to yield equivalent results and if approved in advance by the Administrator.

(2) If CO instruments are used which are essentially free of CO_2 and water vapor interference, the use of the conditioning column may be deleted. (See § 90.317 and § 90.320.)

(3) A CO instrument is considered to be essentially free of CO_2 and water vapor interference if its response to a mixture of three percent CO_2 in N_2, which has been bubbled through water at room temperature, produces an equivalent CO response, as measured on the most sensitive CO range, which is less than one percent of full-scale CO concentration on ranges above 300 ppm full scale or less than three ppm on ranges below 300 ppm full scale. (See § 90.317.)

(c) *Alternate analytical systems.* Analysis systems meeting the specifications

and requirements of this subpart for dilute sampling may be used upon approval of the Administrator.

(d) *Other analyzers and equipment.* Other types of analyzers and equipment may be used if shown to yield equivalent results and if approved in advance by the Administrator.

§ 90.424 Dilute sampling procedures—CVS calibration.

(a) The CVS is calibrated using an accurate flowmeter and restrictor valve.

(1) The flowmeter calibration must be traceable to the National Institute for Standards and Testing (NIST) and serves as the reference value (NIST ''true'' value) for the CVS calibration. (Note: In no case should an upstream screen or other restriction which can affect the flow be used ahead of the flowmeter unless calibrated throughout the flow range with such a device.)

(2) The CVS calibration procedures are designed for use of a ''metering venturi'' type flowmeter. Large radius or American Society of Mechanical Engineers (ASME) flow nozzles are considered equivalent if traceable to NIST measurements. Other measurement systems may be used if shown to be equivalent under the test conditions in this section and traceable to NIST measurements.

(3) Measurements of the various flowmeter parameters are recorded and related to flow through the CVS.

(4) Procedures using both PDP-CVS and CFV-CVS are outlined in the following paragraphs. Other procedures yielding equivalent results may be used if approved in advance by the Administrator.

(b) After the calibration curve has been obtained, verification of the entire system may be performed by injecting a known mass of gas into the system and comparing the mass indicated by the system to the true mass injected. An indicated error does not necessarily mean that the calibration is wrong, since other factors can influence the accuracy of the system (for example, analyzer calibration, leaks, or HC hangup). A verification procedure is found in paragraph (e) of this section.

(c) *PDP-CVS calibration.* (1) The following calibration procedure outlines the equipment, the test configuration, and the various parameters which must be measured to establish the flow rate of the CVS pump.

(i) All the parameters related to the pump are simultaneously measured with the parameters related to a flowmeter which is connected in series with the pump.

(ii) The calculated flow rate, in cm^3/s, (at pump inlet absolute pressure and temperature) can then be plotted versus a correlation function which is the value of a specific combination of pump parameters.

(iii) The linear equation which relates the pump flow and the correlation function is then determined.

(iv) In the event that a CVS has a multiple speed drive, a calibration for each range used must be performed.

(2) This calibration procedure is based on the measurement of the absolute values of the pump and flowmeter parameters that relate the flow rate at each point. Two conditions must be maintained to assure the accuracy and integrity of the calibration curve:

(i) The temperature stability must be maintained during calibration. (Flowmeters are sensitive to inlet temperature oscillations; this can cause the data points to be scattered. Gradual changes in temperature are acceptable as long as they occur over a period of several minutes.)

(ii) All connections and ducting between the flowmeter and the CVS pump must be absolutely void of leakage.

(3) During an exhaust emission test the measurement of these same pump parameters enables the user to calculate the flow rate from the calibration equation.

(4) Connect a system as shown in Figure 5 in Appendix B of this subpart. Although particular types of equipment are shown, other configurations that yield equivalent results may be used if approved in advance by the Administrator. For the system indicated, the following measurements and accuracies are required:

CALIBRATION DATA MEASUREMENTS

Parameter	Symbol	Units	Sensor-readout tolerances
Barometric pressure (corrected)	P_B	kPa	±.340 kPa.
Ambient temperature	T_A	°C	±.28 °C.
Air temperature into metering venturi	ETI	°C	±1.11 °C.
Pressure drop between the inlet and throat of metering venturi	EDP	kPa	±0.012 kPa.
Air flow	Q_S	m^3/min.	±0.5 percent of NIST value.
Air temperature at CVS pump inlet	PTI	°C	±1.11 °C.
Pressure depression at CVS pump inlet	PPI	kPa	±0.055 kPa.
Pressure head at CVS pump outlet	PPO	kPa	±0.055 kPa.
Air temperature at CVS pump outlet (optional)	PTO	°C	±1.11 °C.
Pump revolutions during test period	N	Revs	±1 Rev.
Elapsed time for test period	t	s	±0.5 s.

(5) After the system has been connected as shown in Figure 5 in Appendix B of this subpart, set the variable restrictor in the wide open position and run the CVS pump for 20 minutes. Record the calibration data.

(6) Reset the restrictor valve to a more restricted condition in an increment of pump inlet depression that will yield a minimum of six data points for the total calibration. Allow the system to stabilize for three minutes and repeat the data acquisition.

(7) *Data analysis:*

(i) The air flow rate, Q_s, at each test point is calculated in standard cubic feet per minute 20 °C, 101.3 kPa from the flowmeter data using the manufacturer's prescribed method.

(ii) The air flow rate is then converted to pump flow, V_o, in cubic meter per revolution at absolute pump inlet temperature and pressure:

$$V_o = \frac{Q_s}{n} \times \frac{T_p}{293} \times \frac{101.3\,\text{kPa}}{P_p}$$

Where:

V_o = Pump flow, m^3/rev at T_p, P_p.

Q_s = Meter air flow rate in standard cubic meters per minute, standard conditions are 20 °C, 101.3 kPa.

n = Pump speed in revolutions per minute.

T_p = Absolute pump inlet temperature in Kelvin, =PTI+273 [°K]

P_p = Absolute pump inlet pressure, kPa. = $P_B - PPI$

Where:

P_B = barometric pressure, kPa

PPI = Pump inlet depression, kPa.

(iii) The correlation function at each test point is then calculated from the calibration data:

$$X_o = \frac{1}{n}\sqrt{\left(\frac{\Delta p}{P_e}\right)}$$

Where:

X_o = correlation function.

Δp = The pressure differential from pump inlet to pump outlet [kPa]

$\Delta p = P_e - P_p$.

Where:

P_e = Absolute pump outlet pressure [kPa], $P_e = P_B + PPI$

(iv) A linear least squares fit is performed to generate the calibration equation which has the form:

$$V_0 = D_o - M(X_o)$$

Where:

D_o and M are the intercept and slope constants, respectively, describing the regression line.

(8) A CVS system that has multiple speeds should be calibrated on each speed used. The calibration curves generated for the ranges will be approximately parallel and the intercept values, D_o, will increase as the pump flow range decreases.

(9) If the calibration has been performed carefully, the calculated values from the equation will be within ±0.50 percent of the measured value of V_o. Values of M will vary from one pump to another, but values of D_o for pumps of the same make, model, and range should agree within ±three percent of each other. Calibrations should be performed at pump start-up and after major maintenance to assure the stability of the pump slip rate. Analysis of

mass injection data will also reflect pump slip stability.

(d) *CFV-CVS calibration.* (1) Calibration of the CFV is based upon the flow equation for a critical venturi. Gas flow is a function of inlet pressure and temperature:

$$Q_s = \frac{K_v P}{\sqrt{T}}$$

Where:

Q_s = flow rate [m³/min.]

K_v = calibration coefficient

P = absolute pressure [kPa]

T = absolute temperature [°K]

The calibration procedure described in paragraph (d)(3) of this section establishes the value of the calibration coefficient at measured values of pressure, temperature, and air flow.

(2) The manufacturer's recommended procedure must be followed for calibrating electronic portions of the CFV.

(3) Measurements necessary for flow calibration are as follows:

CALIBRATION DATA MEASUREMENTS

Parameter	Symbol	Units	Tolerances
Barometric Pressure (corrected)	P_B	kPa	±.34 kPa
Air temperature, into flowmeter	*ETI*	°C	±.28 °C
Pressure drop between the inlet and throat of metering venturi.	*EDP*	in. H_2O	±.05 in H_2O
Air flow	Q_S	m³/min	±.5 percent of NIST value
CFV inlet depression	*PPI*	(kPa)	±.055 kPa
Temperature at venturi inlet	T_V	°C	±2.22 °C

(4) Set up equipment as shown in Figure 6 in Appendix B of this subpart and eliminate leaks. (Leaks between the flow measuring devices and the critical flow venturi will seriously affect the accuracy of the calibration.)

(5) Set the variable flow restrictor to the open position, start the blower, and allow the system to stabilize. Record data from all instruments.

(6) Vary the flow restrictor and make at least eight readings across the critical flow range of the venturi.

(7) *Data analysis.* The data recorded during the calibration are to be used in the following calculations:

(i) Calculate the air flow rate (designated as Q_s) at each test point in standard cubic feet per minute from the flow meter data using the manufacturer's prescribed method.

(ii) Calculate values of the calibration coefficient for each test point:

$$K_v = \frac{Q_s \sqrt{T_v}}{P_v}$$

Where:

Q_s = Flow rate in standard cubic meters per minute, at the standard conditions of 20 °C, 101.3 kPa.

T_v = Temperature at venturi inlet, °K.

P_v = Pressure at venturi inlet, kPa = $P_B - P_{PI}$

Where:

P_{PI} = Venturi inlet pressure depression, kPa.

(iii) Plot K_v as a function of venturi inlet pressure. For choked flow, K_v will have a relatively constant value. As pressure decreases (vacuum increases), the venturi becomes unchoked and K_v decreases. (See Figure 7 in Appendix B to Subpart D.)

(iv) For a minimum of eight points in the critical region, calculate an average K_v and the standard deviation.

(v) If the standard deviation exceeds 0.3 percent of the average K_v , take corrective action.

(e) *CVS system verification.* The following ''gravimetric'' technique may be used to verify that the CVS and analytical instruments can accurately measure a mass of gas that has been injected into the system. (Verification can also be accomplished by constant flow metering using critical flow orifice devices.)

(1) Obtain a small cylinder that has been charged with 99.5 percent or greater propane or carbon monoxide gas (CAUTION—carbon monoxide is poisonous).

(2) Determine a reference cylinder weight to the nearest 0.01 grams.

(3) Operate the CVS in the normal manner and release a quantity of pure propane into the system during the

sampling period (approximately five minutes).

(4) The calculations are performed in the normal way except in the case of propane. The density of propane (0.6109 kg/m³/carbon atom) is used in place of the density of exhaust hydrocarbons.

(5) The gravimetric mass is subtracted from the CVS measured mass and then divided by the gravimetric mass to determine the percent accuracy of the system.

(6) Good engineering practice requires that the cause for any discrepancy greater than ±two percent must be found and corrected.

§ 90.425 CVS calibration frequency.

Calibrate the CVS positive displacement pump or critical flow venturi following initial installation, major maintenance, or as necessary when indicated by the CVS system verification (described in § 90.424(e)).

§ 90.426 Dilute emission sampling calculations—gasoline fueled engines.

(a) The final reported emission test results must be computed by use of the following formula:

$$A_{WM} = \frac{\sum_{i}^{n}\left(W_i \cdot WF_i\right)}{\sum_{i}^{n}\left(P_i \cdot WF_i\right)} \cdot K_{H_i}$$

Where:

A_{WM} = Final weighted brake-specific mass emission rate for an emission (HC, CO, CO_2, or NO_X) [g/kW-hr]

W_i = Average mass flow rate of an emission (HC, CO, CO_2, NO_X) from a test engine during mode i [g/hr]

WF_i = Weighting factor for each mode i as defined in § 90.410(a).

P_i = Gross average power generated during mode i [kW], calculated from the following equation,

$$P_i = \frac{2\pi}{60{,}000} \times \text{speed} \times \text{torque}$$

Where:

speed = average engine speed measured during mode i [rev./minute]

torque = average engine torque measured during mode i [N-m]

K_{Hi} = NO_X humidity correction factor for mode i. This correction factor only affects calculations for tion factor only affects calculations for NO_X and is equal to one for all other emissions. K_{Hi} is also equal to 1 for all two-stroke engines.

(b) The mass flow rate, W_i in g/hr, of an emission for mode i is determined from the following equation:

$$W_i = Q_i \cdot \text{Density} \cdot \left[\frac{C_{Di}}{10^6} - \frac{C_{Bi}}{10^6} \cdot \left(1 - \frac{1}{DF_i}\right)\right]$$

Where:

Q_I = Volumetric flow rate [m³/HR at stp].

Density = Density of a specific emission (DensityHC, DensityCO, DensityCO_2, Density NO_X) [g/m³].

DF_i = Dilution factor of the dilute exhaust during mode i.

C_{Di} = Concentration of the emission (HC, CO, NO_X) in dilute exhaust extracted from the CVS during mode i [ppm].

C_{Bi} = Concentration of the emission (HC, CO, NO_X) in the background sample during mode i [ppm].

STP = Standard temperature and pressure. All volumetric calculations made for the equations in this section are to be corrected to a standard temperature of 20 °C and a standard pressure of 101.3 kPa.

(c) Densities for emissions that are to be measured for this test procedure are:

$Density_{HC}$ = 576.8 g/m³
$Density_{NOX}$ = 1912 g/m³
$Density_{CO}$ = 1164 g/m³
$Density_{CO2}$ = 1829 g/m³

(1) The value of $Density_{HC}$ above is calculated based on the assumption that the fuel used has a hydrogen to carbon ratio of 1:1.85. For other fuels

$Density_{HC}$ can be calculated from the following formula:

$$Density_{HC} = \frac{M_{HC}}{R_{STP}}$$

Where:

M_{HC} = The molecular weight of the hydrocarbon molecule divided by the number of carbon atoms in the molecule [g/mole].

R_{STP} = Ideal gas constant for a gas at STP = 0.024065 [$m^3 \cdot$mole]

(2) The idealized molecular weight of the exhaust hydrocarbons, i.e., the molecular weight of the hydrocarbon molecule divided by the number of carbon atoms in the molecule, M_{HC}, can be calculated from the following formula:

$$M_{HC} = M_C + \alpha M_H + \beta M_O$$

Where:

M_C = Molecular weight of carbon=12.01 [g/mole]

M_H = Molecular weight of hydrogen=1.008 [g/mole]

M_O = Molecular weight of oxygen=16.00 [g/mole]

α = Hydrogen to carbon ratio of the test fuel

β = Oxygen to carbon ratio of the test fuel

(3) The value of $Density_{NOX}$ above assumes that NO_X is entirely in the form of NO_2

(d) The dilution factor, DF, is the ratio of the volumetric flow rate of the background air to that of the raw engine exhaust. The following formula is used to determine DF:

$$DF = \frac{\left(13.4 \cdot 10^4\right)}{\left(C_{DHC} + C_{DCO} + C_{DCO2}\right)}$$

Where:

C_{DHC} = Concentration of HC in the dilute sample [ppm].

C_{DCO} = Concentration of CO in the dilute sample [ppm].

C_{DCO2} = Concentration of CO_2 in the dilute sample [ppm].

(e) The humidity correction factor K_H is an adjustment made to measured NO_X values. This corrects for the sensitivity that a spark-ignition engine has to the humidity of its combustion air. The following formula is used to determine K_H for NO_X calculations:

$K_H = (9.953\ H + 0.832)$

Where:

H = the amount of water in an ideal gas; 40 CFR 1065.645 describes how to determine this value (referred to as x_{H_2O}).

K_H = 1 for two-stroke gasoline engines.

(f)–(g) [Reserved]

(h) The fuel mass flow rate, F_i, can be either measured or calculated using the following formula:

$$F_i = \frac{M_{FUEL}}{T}$$

Where:

M_{FUEL} = Mass of fuel consumed by the engine during the mode [g]

T = Duration of the sampling period [hr]

(i) The mass of fuel consumed during the mode smpling period, M_{FUEL}, can be calculated from the following equation:

$$M_{FUEL} = \frac{G_S}{R_2}$$

Where:

G_S = Mass of carbon measured during the mode sampling period [g].

R_2 = The fuel carbon weight fraction, which is the mass of carbon in fuel per mass of fuel [g/g].

(j) The grams of carbon measured during the mode, G_S, can be calculated from the following equation:

$$G_S = \frac{(12.011 \cdot HC_{mass})}{(12.011 + 1.008 \cdot \alpha)} + 0.429 \cdot CO_{mass} + 0.273 \cdot CO_{2mass}$$

Where:

HC_{mass} = mass of hydrocarbon emissions for the mode sampling period [grams].

CO_{mass} mass of carbon monoxide emissions for the mode sample period [grams].

CO_{2mass} = mass of carbon dioxide emissions for the mode sample period [grams].

α = The atomic hydrogen-to-carbon ratio of the fuel.

[60 FR 34598, July 3, 1995, as amended at 70 FR 40450, July 13, 2005; 73 FR 59182, Oct. 8, 2008]

§ 90.427 Catalyst thermal stress resistance evaluation.

(a) The purpose of the evaluation procedure specified in this section is to determine the effect of thermal stress on catalyst conversion efficiency for Phase 1 engines. The thermal stress is imposed on the test catalyst by exposing it to quiescent heated air in an oven. The evaluation of the effect of such stress on catalyst performance is based on the resultant degradation of the efficiency with which the conversions of specific pollutants are promoted. The application of this evaluation procedure involves the several steps that are described in the following paragraphs.

(b) *Determination of initial conversion efficiency*. (1) A synthetic exhaust gas mixture having the composition specified in § 90.329 is heated to a temperature of 450 °C ±5 °C and passed through the new test catalyst or, optionally, a test catalyst that has been exposed to temperatures less than or equal to 500 °C for less than or equal to two hours, under flow conditions that are representative of anticipated in-use conditions.

(2) The concentration of each pollutant of interest, that is, hydrocarbons, carbon monoxide, or oxides of nitrogen, in the effluent of the catalyst is determined by means of the instrumentation that is specified for exhaust gas analysis in subpart D of this part.

(3) The conversion efficiency for each pollutant is determined by:

(i) Subtracting the effluent concentration from the initial concentration;

(ii) Dividing this result by the initial concentration; and

(iii) Multiplying this result by 100 percent.

(c) *Imposition of thermal stress*. (1) The catalyst is placed in an oven that has been pre-heated to 1000 °C and the temperature of the air in the oven is maintained at 1000 °C ±10 °C for six hours.

(2) The catalyst is removed from the oven and allowed to cool to room temperature.

(d) *Determination of final conversion efficiency*. The steps listed in paragraph (b) of this section are repeated.

(e) *Determination of conversion efficiency degradation*. (1) The final conversion efficiency determined in paragraph (c) of this section is subtracted from the initial conversion efficiency determined in paragraph (b) of this section.

(2) This result is divided by the initial conversion efficiency.

(3) This result is multiplied by 100 percent.

(f) *Determination of compliance with degradation limit*. The percent degradation determined in paragraph (e) of this section must not be greater than 20 percent.

[60 FR 34598, July 3, 1995, as amended at 64 FR 15244, Mar. 30, 1999]

APPENDIX A TO SUBPART E OF PART 90—TABLES

TABLE 1—PARAMETERS TO BE MEASURED OR CALCULATED AND RECORDED

Parameter	Units
Airflow rate (dry), if applicable	g/h
Fuel flow rate	g/h
Engine Speed	rpm
Engine Torque Output	N m
Power Output	kW
Air inlet temperature	°C
Air humidity	mg/kg
Coolant temperature (liquid cooled)	°C
Exhaust mixing chamber surface temperature, if applicable	°C
Exhaust sample line temperature, if applicable	°C
Total Accumulated hours of Engine Operation	h
Barometric Pressure	kPa

TABLE 2—TEST CYCLES FOR CLASS I-A, I-B, AND CLASS I-V ENGINES

Mode Speed	1	2	3	4	5	6	7	8	9	10	11
	Rated Speed					Intermediate Speed					Idle
Mode Points—A Cycle	.....	.....	.....	.....	.....	1	2	3	4	5	6
Load Percent—A Cycle	.....	.....	.....	.....	.....	100	75	50	25	10	0
Weighting	.....	.....	.....	.....	.....	9%	20%	29%	30%	7%	5%
Mode Points—B Cycle	1	2	3	4	5	.....	.....	.....	.....	.....	6
Load Percent—B Cycle	100	75	50	25	10	.....	.....	.....	.....	.....	0
Weighting	9%	20%	29%	30%	7%	.....	.....	.....	.....	.....	5%
Mode Points—C Cycle	1	.....	.....	.....	.....	.....	.....	.....	.....	.....	2
Load Percent—C Cycle	100	.....	.....	.....	.....	.....	.....	.....	.....	.....	0
Weighting for Phase 1 Engines	90%	.....	.....	.....	.....	.....	.....	.....	.....	.....	10%
Weighting for Phase 2 Engines	85%	.....	.....	.....	.....	.....	.....	.....	.....	.....	15%

[60 FR 34598, July 3, 1995, as amended at 65 FR 24313, Apr. 25, 2000]

APPENDIX B TO SUBPART E OF PART 90—FIGURES

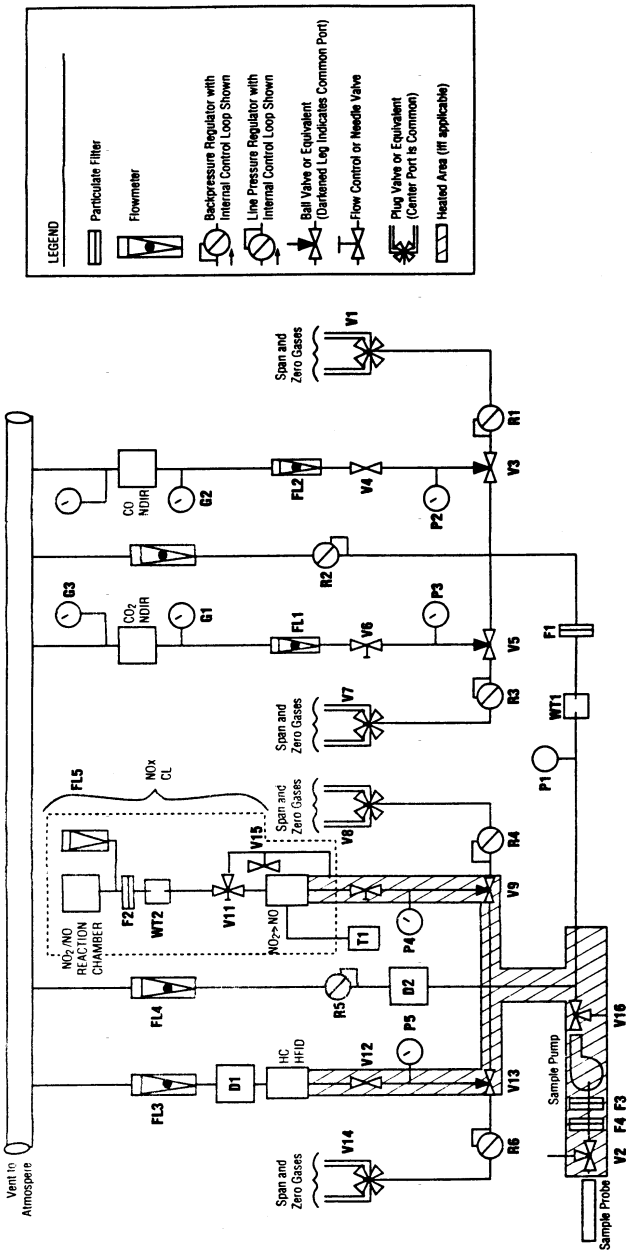

Figure 1. — Exhaust Gas Sampling and Analytical Train, Continuous Sampling

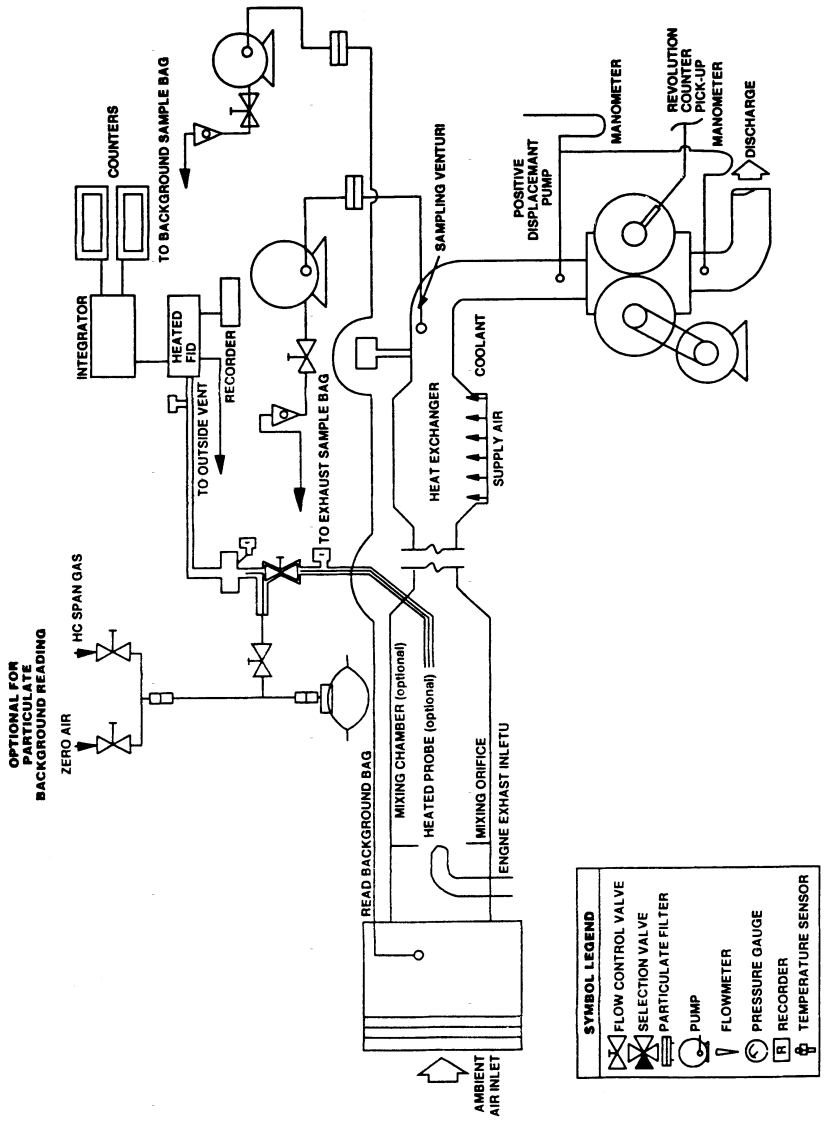

Figure 2 — Gaseous Emissions Sampling System (PDP-CVS) Showing both grab bag sampling and continous sampling

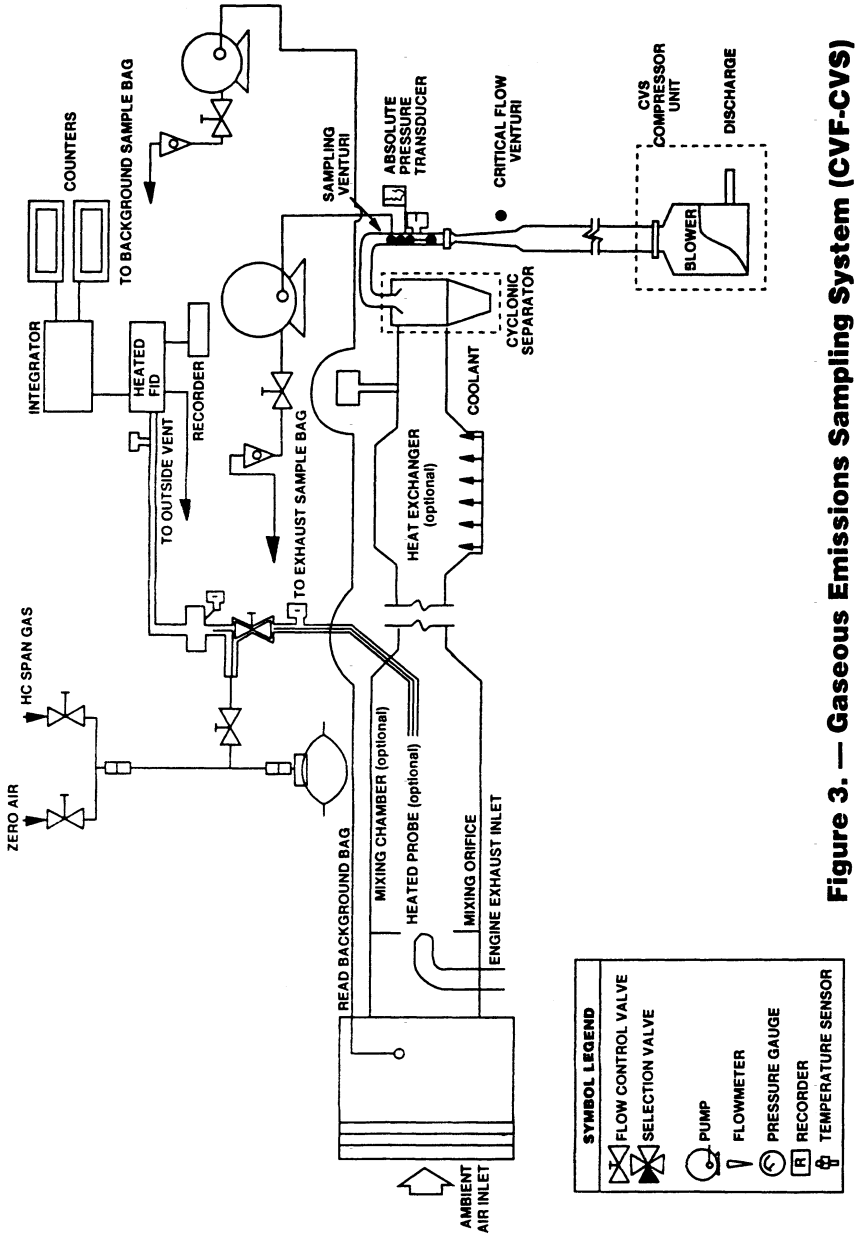

Figure 3. — Gaseous Emissions Sampling System (CVF-CVS)

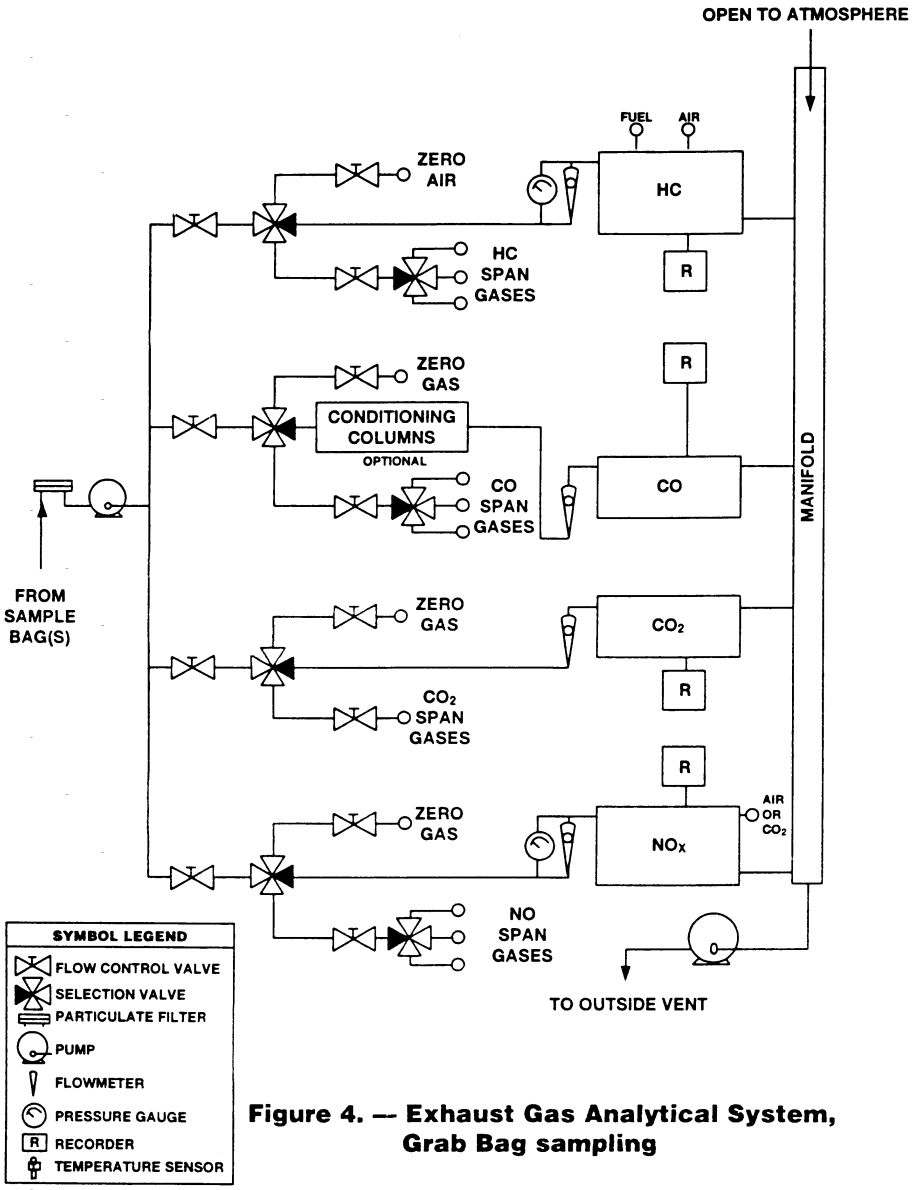

Figure 4. — Exhaust Gas Analytical System, Grab Bag sampling

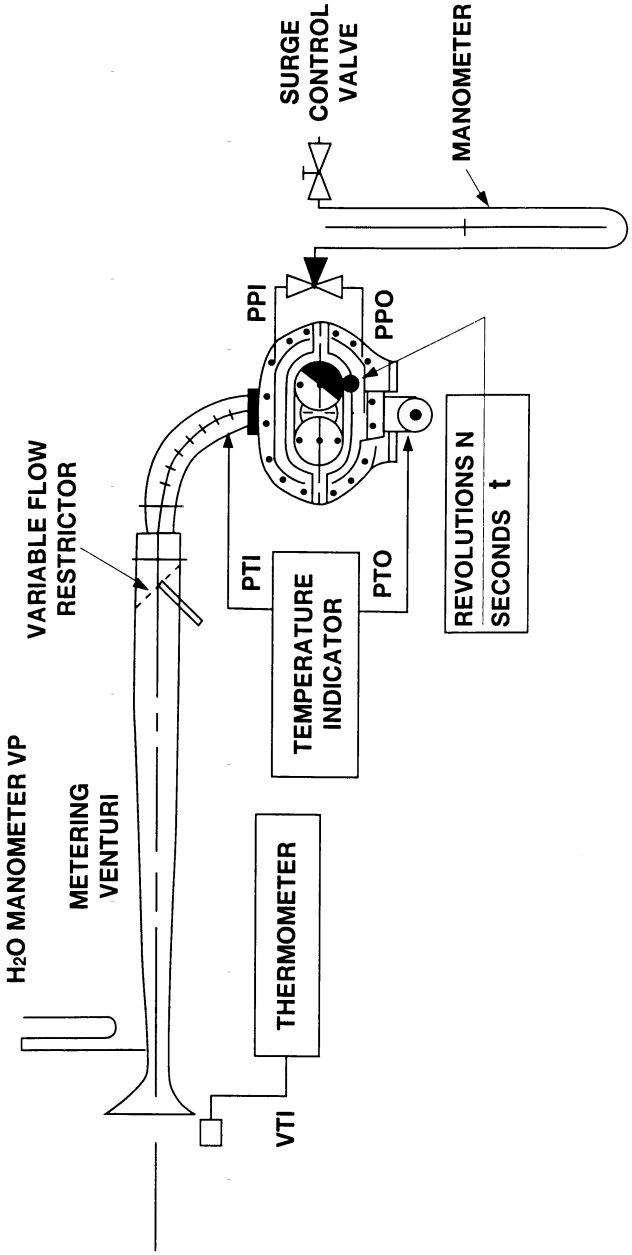

Figure 5. — PDP-CVS Calibration Configuration

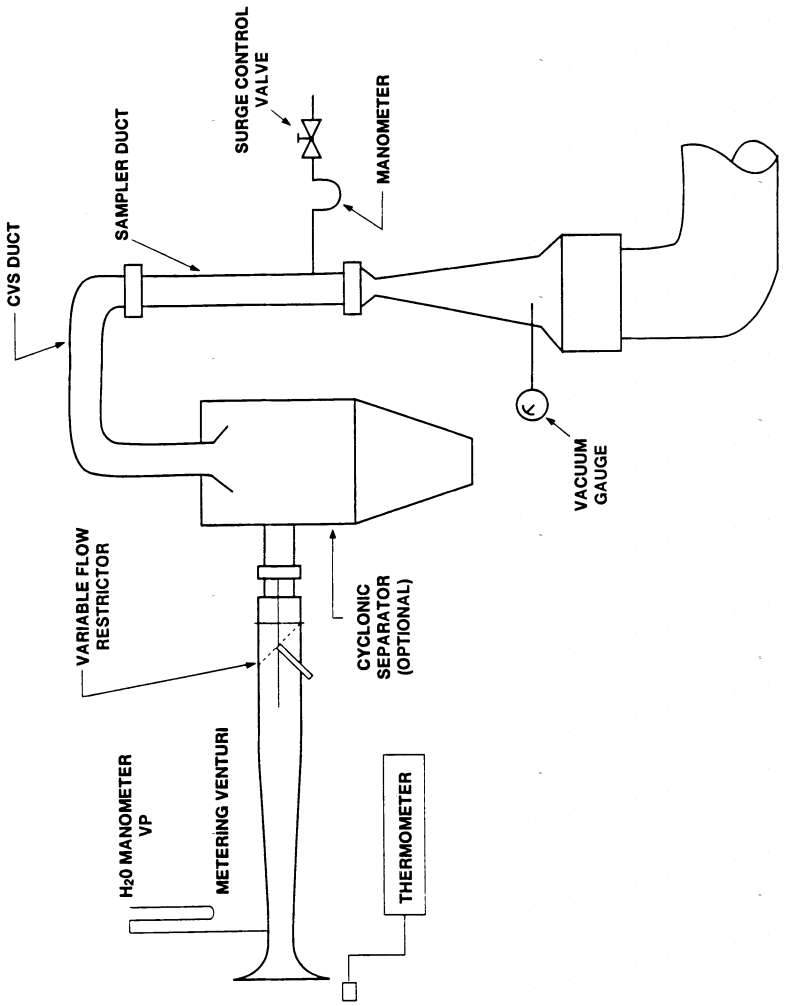

Figure 6. — CFV-CVS Calibration Configuration

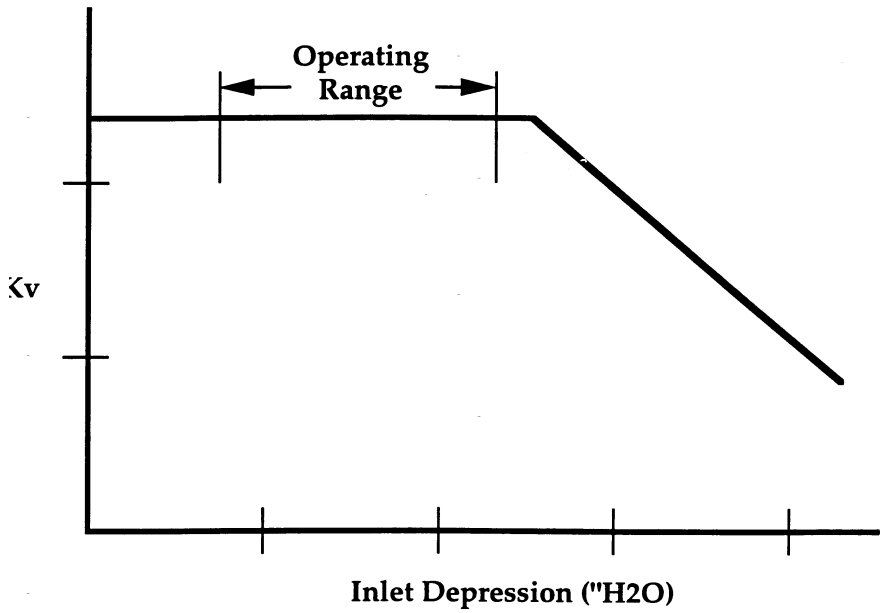

Figure 7.—Sonic Flow Choking

Subpart F—Selective Enforcement Auditing

§ 90.501 Applicability.

The requirements of subpart F shall be applicable to all nonroad engines and vehicles subject to the provisions of subpart A of part 90.

§ 90.502 Definitions.

The definitions in subpart A of this part apply to this subpart. The following definitions shall also apply to this subpart.

Acceptable quality level (AQL) means the maximum percentage of failing engines that can be considered a satisfactory process average for sampling inspections.

Configuration means any subclassification of an engine family which can be described on the basis of gross power, emission control system, governed speed, fuel system, engine calibration, and other parameters as designated by the Administrator.

Inspection criteria means the pass and fail numbers associated with a particular sampling plan.

Test engine means an engine in a test sample.

Test sample means the collection of engines selected from the population of an engine family for emission testing.

§ 90.503 Test orders.

(a) The Administrator shall require any testing under this subpart by means of a test order addressed to the manufacturer.

(b) The test order will be signed by the Assistant Administrator for Air and Radiation or his or her designee. The test order will be delivered in person by an EPA enforcement officer or EPA authorized representative to a company representative or sent by registered mail, return receipt requested, to the manufacturer's representative

who signed the application for certification submitted by the manufacturer, pursuant to the requirements of the applicable section of subpart B of this part. Upon receipt of a test order, the manufacturer shall comply with all of the provisions of this subpart and instructions in the test order.

(c) *Information included in test order.* (1) The test order will specify the engine family to be selected for testing, the manufacturer's engine assembly plant or associated storage facility or port facility (for imported engines) from which the engines must be selected, the time and location at which engines must be selected, and the procedure by which engines of the specified family must be selected. The test order may specify the configuration to be audited and/or the number of engines to be selected per day. Engine manufacturers will be required to select a minimum of four engines per day unless an alternate selection procedure is approved pursuant to § 90.507(a), or unless total production of the specified configuration is less than four engines per day. If total production of the specified configuration is less than four engines per day, the manufacturer will select the actual number of engines produced per day.

(2) The test order may include alternate families to be selected for testing at the Administrator's discretion in the event that engines of the specified family are not available for testing because those engines are not being manufactured during the specified time, or are not being stored at the specified assembly plant, associated storage facilities or port of entry.

(3) If the specified family is not being manufactured at a rate of at least two engines per day in the case of manufacturers specified in § 90.508(g)(1), or one engine per day in the case of manufacturers specified in § 90.508(g)(2), over the expected duration of the audit, the Assistant Administrator or his or her designated representative may select engines of the alternate family for testing.

(4) In addition, the test order may include other directions or information essential to the administration of the required testing.

(d) A manufacturer may submit a list of engine families and the corresponding assembly plants, associated storage facilities, or (in the case of imported engines) port facilities from which the manufacturer prefers to have engines selected for testing in response to a test order. In order that a manufacturer's preferred location be considered for inclusion in a test order for a particular engine family, the list must be submitted prior to issuance of the test order. Notwithstanding the fact that a manufacturer has submitted the list, the Administrator may order selection at other than a preferred location.

(e) Upon receipt of a test order, a manufacturer shall proceed in accordance with the provisions of this subpart.

(f)(1) During a given model year, the Administrator shall not issue to a manufacturer more Selective Enforcement Auditing (SEA) test orders than an annual limit determined by the following:

(i) for manufacturers with a projected annual production of less than 100,000 engines bound for the United States market for that model year, the number is two;

(ii) for manufacturers with a projected annual production of 100,000 or more engines bound for the United States market for that model year, by dividing the manufacturer's total number of certified engine families by five and rounding to the nearest whole number, unless the number of engine families is less than eight, in which case the number is two.

(2) If a manufacturer submits to EPA in writing prior to or during the model year a reliable sales projection update or adds engine families or deletes engine families from its production, that information will be used for recalculating the manufacturer's annual limit of SEA test orders.

(3) Any SEA test order for which the family or configuration, as appropriate, fails under § 90.510 or for which testing is not completed will not be counted against the annual limit.

(4) When the annual limit has been met, the Administrator may issue additional test orders to test those families or configurations for which evidence

exists indicating nonconformity, or for which the Administrator has reason to believe are not being appropriately represented or tested in Production Line Testing conducted under subpart H of this part, if applicable. An SEA test order issued pursuant to this provision will include a statement as to the reason for its issuance.

[60 FR 34598, July 3, 1995, as amended at 64 FR 15244, Mar. 30, 1999]

§ 90.504 Testing by the Administrator.

(a) The Administrator may require by test order under § 90.503 that engines of a specified family be selected in a manner consistent with the requirements of § 90.507 and submitted to the Administrator at the place designated for the purpose of conducting emission tests. These tests will be conducted in accordance with § 90.508 to determine whether engines manufactured by the manufacturer conform with the regulations with respect to which the certificate of conformity was issued.

(b) *Designating official data.* (1) Whenever the Administrator conducts a test on a test engine or the Administrator and manufacturer each conduct a test on the same test engine, the results of the Administrator's test will comprise the official data for that engine.

(2) Whenever the manufacturer conducts all tests on a test engine, the manufacturer's test data will be accepted as the official data, provided that if the Administrator makes a determination based on testing conducted under paragraph (a) of this section that there is a substantial lack of agreement between the manufacturer's test results and the Administrator's test results, no manufacturer's test data from the manufacturer's test facility will be accepted for purposes of this subpart.

(c) If testing conducted under paragraph (a) of this section is unacceptable under § 90.503, the Administrator shall:

(1) Notify the manufacturer in writing of the Administrator's determination that the test facility is inappropriate for conducting the tests required by this subpart and the reasons therefor; and

(2) Reinstate any manufacturer's data upon a showing by the manufacturer that the data acquired under paragraph (a) of this section was erroneous and the manufacturer's data was correct.

(d) The manufacturer may request in writing that the Administrator reconsider his or her determination in paragraph (b)(2) of this section based on data or information which indicates that changes have been made to the test facility and these changes have resolved the reasons for disqualification.

§ 90.505 Maintenance of records; submittal of information.

(a) The manufacturer of any new nonroad engine subject to any of the provisions of this subpart shall establish, maintain, and retain the following adequately organized and indexed records:

(1) *General records.* A description of all equipment used to test engines, as specified in subpart D of this part, in accordance with § 90.508 pursuant to a test order issued under this subpart.

(2) *Individual records.* These records pertain to each audit conducted pursuant to this subpart and shall include:

(i) The date, time, and location of each test;

(ii) The number of hours of service accumulated on the engine when the test began and ended;

(iii) The names of all supervisory personnel involved in the conduct of the audit;

(iv) A record and description of any repairs performed prior to and/or subsequent to approval by the Administrator, giving the date, associated time, justification, name(s) of the authorizing personnel, and names of all supervisory personnel responsible for the conduct of the repair;

(v) The date the engine was shipped from the assembly plant, associated storage facility or port facility and date the engine was received at the testing facility;

(vi) A complete record of all emission tests performed pursuant to this subpart (except tests performed directly by EPA), including all individual worksheets and/or other documentation relating to each test, or exact copies thereof, to be in accordance with the record requirements specified in

§§ 90.405, 90.406, 90.418, and/or 90.425 as applicable.

(vii) A brief description of any significant audit events commencing with the test engine selection process, but not described under paragraph (a)(2) of this section, including such extraordinary events as engine damage during shipment.

(3) The manufacturer shall record test equipment description, pursuant to paragraph (a)(1) of this section, for each test cell that can be used to perform emission testing under this subpart.

(b) The manufacturer shall retain all records required to be maintained under this subpart for a period of one year after completion of all testing in response to a test order. Records may be retained as hard copy or reduced to microfilm, floppy disc, and so forth, depending upon the manufacturer's record retention procedure, provided that in every case all the information contained in the hard copy is retained.

(c) The manufacturer shall, upon request by the Administrator, submit the following information with regard to engine production:

(1) Projected U.S. sales data for each engine configuration within each engine family for which certification is requested;

(2) Number of engines, by configuration and assembly plant, scheduled for production for the time period designated in the request;

(3) Number of engines, by configuration and by assembly plant, storage facility or port facility, scheduled to be stored at facilities for the time period designated in the request; and

(4) Number of engines, by configuration and assembly plant, produced during the time period designated in the request that are complete for introduction into commerce.

(d) Nothing in this section limits the Administrator's discretion in requiring the manufacturer to retain additional records or submit information not specifically required by this section.

(e) The manufacturer shall address all reports, submissions, notifications, and requests for approvals made under this subpart to: Director, Manufacturers Operations Division, U.S. Environmental Protection Agency, 6405–J, 401 M St., SW., Washington, DC 20460.

§ 90.506 Right of entry and access.

(a) To allow the Administrator to determine whether a manufacturer is complying with the provisions of this subpart, a test order is issued which authorizes EPA enforcement officers or their authorized representatives upon presentation of credentials to enter during operating hours any of the following places:

(1) Any facility where any engine to be introduced into commerce, including ports of entry, or any emission-related component is manufactured, assembled, or stored;

(2) Any facility where any tests conducted pursuant to a test order or any procedures or activities connected with these tests are or were performed;

(3) Any facility where any engine which is being tested, was tested, or will be tested is present; and

(4) Any facility where any record or other document relating to any of the above is located.

(b) Upon admission to any facility referred to in paragraph (a) of this section, EPA enforcement officers or EPA authorized representatives are authorized to perform the following inspection-related activities:

(1) To inspect and monitor any aspects of engine assembly, storage, testing and other procedures, and the facilities in which these procedures are conducted;

(2) To inspect and monitor any aspect of engine test procedures or activities, including, but not limited to, engine selection, preparation, service accumulation, emission test cycles, and maintenance and verification of test equipment calibration;

(3) To inspect and make copies of any records or documents related to the assembly, storage, selection and testing of an engine in compliance with a test order; and

(4) To inspect and photograph any part or aspect of any engine and any component used in the assembly thereof that is reasonably related to the purpose of the entry.

(c) EPA enforcement officers or EPA authorized representatives are authorized to obtain reasonable assistance

without cost from those in charge of a facility to help the officers perform any function listed in this subpart, and they are authorized to request the recipient of a test order to make arrangements with those in charge of a facility operated for the manufacturer's benefit to furnish reasonable assistance without cost to EPA, whether or not the recipient controls the facility.

(1) Reasonable assistance includes, but is not limited to, clerical, copying, interpretation and translation services, the making available on an EPA enforcement officer's or EPA authorized representative's request of personnel of the facility being inspected during their working hours to inform the EPA enforcement officer or EPA authorized representative of how the facility operates and to answer the officer's questions, and the performance on request of emission tests on any engine which is being, has been, or will be used for SEA testing.

(2) A manufacturer may be compelled to cause the personal appearance of any employee at such a facility before an EPA enforcement officer or EPA authorized representative by written request for his or her appearance, signed by the Assistant Administrator for Air and Radiation, served on the manufacturer. Any such employee who has been instructed by the manufacturer to appear will be entitled to be accompanied, represented, and advised by counsel.

(d) EPA enforcement officers or EPA authorized representatives are authorized to seek a warrant or court order authorizing the EPA enforcement officers or EPA authorized representatives to conduct activities related to entry and access as authorized in this section, as appropriate, to execute the functions specified in this section. EPA enforcement officers or authorized representatives may proceed ex parte to obtain a warrant whether or not the EPA enforcement officers or EPA authorized representatives first attempted to seek permission of the recipient of the test order or the party in charge of the facilities in question to conduct activities related to entry and access as authorized in this section.

(e) A recipient of a test order shall permit an EPA enforcement officer(s) or EPA authorized representative(s) who presents a warrant or court order to conduct activities related to entry and access as authorized in this section and as described in the warrant or court order. The recipient shall also cause those in charge of its facility or a facility operated for its benefit to permit entry and access as authorized in this section pursuant to a warrant or court order whether or not the recipient controls the facility. In the absence of a warrant or court order, an EPA enforcement officer(s) or EPA authorized representative(s) may conduct activities related to entry and access as authorized in this section only upon the consent of the recipient of the test order or the party in charge of the facilities in question.

(f) It is not a violation of this part or of the Clean Air Act for any person to refuse to permit an EPA enforcement officer(s) or an EPA authorized representative(s) to conduct activities related to entry and access as authorized in this section if the officer or representative appears without a warrant or court order.

(g) A manufacturer is responsible for locating its foreign testing and manufacturing facilities in jurisdictions in which local foreign law does not prohibit an EPA enforcement officer(s) or an EPA authorized representative(s) from conducting the entry and access activities specified in this section. EPA will not attempt to make any inspections which it has been informed that local foreign law prohibits.

§ 90.507 Sample selection.

(a) Engines comprising a test sample will be selected at the location and in the manner specified in the test order. If a manufacturer determines that the test engines cannot be selected in the manner specified in the test order, an alternative selection procedure may be employed, provided the manufacturer requests approval of the alternative procedure prior to the start of test sample selection, and the Administrator approves the procedure.

(b) The manufacturer shall assemble the test engines of the family selected for testing using its normal mass production process for engines to be distributed into commerce. If, between

the time the manufacturer is notified of a test order and the time the manufacturer finishes selecting test engines, the manufacturer implements any change(s) in its production processes, including quality control, which may reasonably be expected to affect the emissions of the engines selected, then the manufacturer shall, during the audit, inform the Administrator of such changes. If the test engines are selected at a location where they do not have their operational and emission control systems installed, the test order will specify the manner and location for selection of components to complete assembly of the engines. The manufacturer shall assemble these components onto the test engines using normal assembly and quality control procedures as documented by the manufacturer.

(c) No quality control, testing, or assembly procedures will be used on the test engine or any portion thereof, including parts and subassemblies, that have not been or will not be used during the production and assembly of all other engines of that family, unless the Administrator approves the modification in assembly procedures pursuant to paragraph (b) of this section.

(d) The test order may specify that an EPA enforcement officer(s) or authorized representative(s), rather than the manufacturer, select the test engines according to the method specified in the test order.

(e) The order in which test engines are selected determines the order in which test results are to be used in applying the sampling plan in accordance with § 90.510.

(f) The manufacturer shall keep on hand all untested engines, if any, comprising the test sample until a pass or fail decision is reached in accordance with § 90.510(e). The manufacturer may ship any tested engine which has not failed in accordance with § 90.510(b). However, once the manufacturer ships any test engine, it relinquishes the prerogative to conduct retests as provided in § 90.508(i).

§ 90.508 Test procedures.

(a) For nonroad engines subject to the provisions of this subpart, the prescribed test procedures are the appropriate small SI engine test procedures as described in subpart E of this part.

(b)(1) The manufacturer shall not adjust, repair, prepare, or modify the engines selected for testing and shall not perform any emission tests on engines selected for testing pursuant to the test order unless this adjustment, repair, preparation, modification, and/or tests are documented in the manufacturer's engine assembly and inspection procedures and are actually performed or unless these adjustments and/or tests are required or permitted under this subpart or are approved in advance by the Administrator.

(2) The Administrator may adjust or cause to be adjusted any engine parameter which the Administrator has determined to be subject to adjustment for certification and Selective Enforcement Audit testing in accordance with § 90.112(c), to any setting within the physically adjustable range of that parameter, as determined by the Administrator in accordance with § 90.112(a), prior to the performance of any tests. However, if the idle speed parameter is one which the Administrator has determined to be subject to adjustment, the Administrator shall not adjust it to any setting which causes a lower engine idle speed than would have been possible within the physically adjustable range of the idle speed parameter if the manufacturer had accumulated 12 hours of service on the engine under paragraph (c) of this section, all other parameters being identically adjusted for the purpose of the comparison. The manufacturer may be requested to supply information needed to establish an alternate minimum idle speed. The Administrator, in making or specifying these adjustments, may consider the effect of the deviation from the manufacturer's recommended setting on emission performance characteristics as well as the likelihood that similar settings will occur on in-use engines. In determining likelihood, the Administrator may consider factors such as, but not limited to, the effect of the adjustment on engine performance characteristics and surveillance information from similar in-use engines.

(c) *Service Accumulation*. Prior to performing exhaust emission testing on an SEA test engine, the manufacturer

may accumulate on each engine a number of hours of service equal to the greater of 12 hours or the number of hours the manufacturer accumulated during certification on the emission data engine corresponding to the family specified in the test order.

(1) Service accumulation must be performed in a manner using good engineering judgment to obtain emission results representative of normal production engines. This service accumulation must be consistent with the new engine break-in instructions contained in the applicable owner's manual.

(2) The manufacturer shall accumulate service at a minimum rate of 12 hours per engine during each 24-hour period, unless otherwise approved by the Administrator.

(i) The first 24 hour period for service shall begin as soon as authorized checks, inspections, and preparations are completed on each engine.

(ii) The minimum service or mileage accumulation rate does not apply on weekends or holidays.

(iii) If the manufacturer's service or target is less than the minimum rate specified (12 hours per day), then the minimum daily accumulation rate shall be equal to the manufacturer's service target.

(3) Service accumulation shall be completed on a sufficient number of test engines during consecutive 24-hour periods to assure that the number of engines tested per day fulfills the requirements of paragraphs (g)(1) and (g)(2) of this section.

(d) The manufacturer shall not perform any maintenance on test engines after selection for testing, nor shall the Administrator allow deletion of any engine from the test sequence, unless requested by the manufacturer and approved by the Administrator before any engine maintenance or deletion.

(e) The manufacturer shall expeditiously ship test engines from the point of selection to the test facility. If the test facility is not located at or in close proximity to the point of selection, the manufacturer shall assure that test engines arrive at the test facility within 24 hours of selection, except that the Administrator may approve more time for shipment based upon a request by the manufacturer accompanied by a satisfactory justification.

(f) If an engine cannot complete the service accumulation or an emission test because of a malfunction, the manufacturer may request that the Administrator authorize either the repair of that engine or its deletion from the test sequence.

(g) Whenever a manufacturer conducts testing pursuant to a test order issued under this subpart, the manufacturer shall notify the Administrator within one working day of receipt of the test order as to which test facility will be used to comply with the test order. If no test cells are available at a desired facility, the manufacturer must provide alternate testing capability satisfactory to the Administrator.

(1) A manufacturer with projected nonroad engine sales for the United States market for the applicable year of 7,500 or greater shall complete emission testing at a minimum rate of two engines per 24-hour period, including each voided test.

(2) A manufacturer with projected nonroad engine sales for the United States market for the applicable year of less than 7,500 shall complete emission testing at a minimum rate of one engine per 24-hour period, including each voided test.

(3) The Administrator may approve a lower daily rate of emission testing based upon a request by a manufacturer accompanied by a satisfactory justification.

(h) The manufacturer shall perform test engine selection, shipping, preparation, service accumulation, and testing in such a manner as to assure that the audit is performed in an expeditious manner.

(i) *Retesting*. (1) The manufacturer may retest any engines tested during a Selective Enforcement Audit once a fail decision for the audit has been reached in accordance with § 90.510(e).

(2) The Administrator may approve retesting at other times based upon a request by the manufacturer accompanied by a satisfactory justification.

(3) The manufacturer may retest each engine a total of three times. The manufacturer shall test each engine or vehicle the same number of times. The

manufacturer may accumulate additional service before conducting a retest, subject to the provisions of paragraph (c) of this section.

(j) A manufacturer may test engines with the test procedure specified in subpart E of this part to demonstrate compliance with the exhaust emission standards; however, if alternate procedures were used in certification pursuant to § 90.120, then those alternate procedures shall be used.

§ 90.509 Calculation and reporting of test results.

(a) Initial test results are calculated following the applicable test procedure specified in paragraph (a) of § 90.508. The manufacturer shall round these results, in accordance with ASTM E29–93a, to the number of decimal places contained in the applicable emission standard expressed to one additional significant figure. ASTM E29–93a has been incorporated by reference. See § 90.7.

(b)(1) Final test results are calculated by summing the initial test results derived in paragraph (a) of this section for each test engine, dividing by the number of tests conducted on the engine, and rounding to the same number of decimal places contained in the applicable standard. For Phase 2 engines only, this result shall be expressed to one additional significant figure.

(2) Final deteriorated test results (for Phase 2 test engines only) are calculated by applying the appropriate deterioration factors, from the certification process for the engine family, to the final test results, and rounding to the same number of decimal places contained in the applicable standard.

(c) Within five working days after completion of testing of all engines pursuant to a test order, the manufacturer shall submit to the Administrator a report which includes the following information:

(1) The location and description of the manufacturer's exhaust emission test facilities which were utilized to conduct testing reported pursuant to this section;

(2) The applicable standards or compliance levels against which the engines were tested;

(3) A description of the engine and its associated emission-related component selection method used;

(4) For each test conducted;

(i) Test engine description, including:

(A) Configuration and engine family identification;

(B) Year, make and build date;

(C) Engine identification number; and

(D) Number of hours of service accumulated on engine prior to testing;

(ii) Location where service accumulation was conducted and description of accumulation procedure and schedule;

(iii) Test number, date, test procedure used, initial test results before and after rounding and final test results for all exhaust emission tests, whether valid or invalid, and the reason for invalidation, if applicable;

(iv) A complete description of any modification, repair, preparation, maintenance, and/or testing which was performed on the test engine and has not been reported pursuant to any other paragraph of this subpart and will not be performed on all other production engines;

(v) Where an engine was deleted from the test sequence by authorization of the Administrator, the reason for the deletion;

(vi) Any other information the Administrator may request relevant to the determination as to whether the new engines being manufactured by the manufacturer do in fact conform with the regulations with respect to which the certificate of conformity was issued; and

(5) The following statement and endorsement:

This report is submitted pursuant to sections 213 and 208 of the Clean Air Act. This Selective Enforcement Audit was conducted in complete conformance with all applicable regulations under 40 CFR part 90 *et seq.* and the conditions of the test order. No emission-related changes to production processes or quality control procedures for the engine family tested have been made between receipt of the test order and conclusion of the audit. All data and information reported herein is, to the best of (Company Name) knowledge, true and accurate. I am aware of

the penalties associated with violations of the Clean Air Act and the regulations thereunder. (Authorized Company Representative.)

[60 FR 34598, July 3, 1995, as amended at 64 FR 15244, Mar. 30, 1999]

§ 90.510 Compliance with acceptable quality level and passing and failing criteria for selective enforcement audits.

(a) The prescribed acceptable quality level is 40 percent.

(b) For Phase I engines, a failed engine is an engine whose final test results pursuant to § 90.509(b), for one or more of the applicable pollutants exceed the emission standard. For Phase 2 engines, a failed engine is an engine whose final deteriorated test results pursuant to § 90.509(b), for one or more of the applicable pollutants exceed the emission standard (FEL, if applicable).

(c) The manufacturer shall test engines comprising the test sample until a pass decision is reached for all pollutants or a fail decision is reached for one pollutant. A pass decision is reached when the cumulative number of failed engines, as defined in paragraph (b) of this section, for each pollutant is less than or equal to the pass decision number, as defined in paragraph (d) of this section, appropriate to the cumulative number of engines tested. A fail decision is reached when the cumulative number of failed engines for one or more pollutants is greater than or equal to the fail decision number, as defined in paragraph (d) of this section, appropriate to the cumulative number of engines tested.

(d) The pass and fail decision numbers associated with the cumulative number of engines tested are determined by using the tables in Appendix A to this subpart, ''Sampling Plans for Selective Enforcement Auditing of Small Nonroad Engines,'' appropriate to the projected sales as made by the manufacturer in its report to EPA under § 90.505(c)(1). In the tables in Appendix A to this subpart, sampling plan ''stage'' refers to the cumulative number of engines tested. Once a pass or fail decision has been made for a particular pollutant, the number of engines with final test results exceeding the emission standard for that pollutant shall not be considered any further for the purposes of the audit.

(e) Passing or failing of an SEA occurs when the decision is made on the last engine test required to make a decision under paragraph (c) of this section.

(f) The Administrator may terminate testing earlier than required in paragraph (c) of this section.

[60 FR 34598, July 3, 1995, as amended at 64 FR 15244, Mar. 30, 1999]

§ 90.511 Suspension and revocation of certificates of conformity.

(a) The certificate of conformity is suspended with respect to any engine failing pursuant to § 90.510(b) effective from the time that testing of that engine is completed.

(b) The Administrator may suspend the certificate of conformity for a family which does not pass an SEA, pursuant to paragraph § 90.510(c), based on the first test or all tests conducted on each engine. This suspension will not occur before ten days after failure of the audit.

(c) If the results of testing pursuant to these regulations indicate that engines of a particular family produced at one plant of a manufacturer do not conform to the regulations with respect to which the certificate of conformity was issued, the Administrator may suspend the certificate of conformity with respect to that family for engines manufactured by the manufacturer at all other plants.

(d) Notwithstanding the fact that engines described in the application may be covered by a certificate of conformity, the Administrator may suspend such certificate in whole or in part if the Administrator finds any one of the following infractions to be substantial:

(1) The manufacturer refuses to comply with the provisions of a test order issued by the Administrator under § 90.503.

(2) The manufacturer refuses to comply with any of the requirements of this subpart.

(3) The manufacturer submits false or incomplete information in any report or information provided to the Administrator under this subpart.

(4) The manufacturer renders inaccurate any test data submitted under this subpart.

(5) An EPA enforcement officer or EPA authorized representative is denied the opportunity to conduct activities related to entry and access as authorized in this subpart and a warrant or court order is presented to the manufacturer or the party in charge of a facility in question.

(6) An EPA enforcement officer or EPA authorized representative is unable to conduct activities related to entry and access as authorized in § 90.506 because a manufacturer has located a facility in a foreign jurisdiction where local law prohibits those activities.

(e) The Administrator shall notify the manufacturer in writing of any suspension or revocation of a certificate of conformity in whole or in part, except that the certificate is immediately suspended with respect to any failed engines as provided for in paragraph (a) of this section.

(f) The Administrator may revoke a certificate of conformity for a family when the certificate has been suspended pursuant to paragraph (b) or (c) of this section if the proposed remedy for the nonconformity, as reported by the manufacturer to the Administrator, is one requiring a design change or changes to the engine and/or emission control system as described in the application for certification of the affected family.

(g) Once a certificate has been suspended for a failed engine, as provided for in paragraph (a) of this section, the manufacturer shall take the following actions:

(1) Before the certificate is reinstated for that failed engine;

(i) Remedy the nonconformity; and

(ii) Demonstrate that the engine conforms to applicable standards by retesting the engine in accordance with these regulations.

(2) Submit a written report to the Administrator, after successful completion of testing on the failed engine, which contains a description of the remedy and test results for each engine in addition to other information that may be required by this regulation.

(h) Once a certificate for a failed family has been suspended pursuant to paragraph (b) or (c) of this section, the manufacturer shall take the following actions before the Administrator will consider reinstating the certificate:

(1) Submit a written report to the Administrator which identifies the reason for the noncompliance of the engines, describes the proposed remedy, including a description of any proposed quality control and/or quality assurance measures to be taken by the manufacturer to prevent future occurrences of the problem, and states the date on which the remedies will be implemented.

(2) Demonstrate that the engine family for which the certificate of conformity has been suspended does in fact comply with these regulations by testing engines selected from normal production runs of that engine family, at the plant(s), port facility(ies) or associated storage facility(ies) specified by the Administrator, in accordance with the conditions specified in the initial test order. If the manufacturer elects to continue testing individual engines after suspension of a certificate, the certificate is reinstated for an engine actually determined to be in conformance with the applicable standards through testing in accordance with the applicable test procedures, provided that the Administrator has not revoked the certificate pursuant to paragraph (f) of this section.

(i) Once the certificate has been revoked for a family and the manufacturer desires to continue introduction into commerce of a modified version of that family, the following actions shall be taken before the Administrator may consider issuing a certificate for that modified family:

(1) If the Administrator determines that the proposed change(s) in engine design may have an effect on emission performance deterioration, the Administrator shall notify the manufacturer, within five working days after receipt of the report in paragraph (f) of this section, whether subsequent testing under this subpart will be sufficient to evaluate the proposed change or changes or whether additional testing will be required; and

(2) After implementing the change or changes intended to remedy the nonconformity, the manufacturer shall demonstrate that the modified engine family does in fact conform with these regulations by testing engines selected from normal production runs of that modified engine family in accordance with the conditions specified in the initial test order. If the subsequent audit results in passing of the audit, the Administrator shall reissue the certificate or issue a new certificate, as the case may be, to include that family, provided that the manufacturer has satisfied the testing requirements of paragraph (i)(1) of this section. If the subsequent audit is failed, the revocation remains in effect. Any design change approvals under this subpart are limited to the family affected by the test order.

(j) At any time subsequent to an initial suspension of a certificate of conformity for a test engine pursuant to paragraph (a) of this section, but not later than 15 days or such other period as may be allowed by the Administrator after notification of the Administrator's decision to suspend or revoke a certificate of conformity in whole or in part pursuant to paragraphs (b), (c), or (f) of this section, a manufacturer may request a hearing as to whether the tests have been properly conducted or any sampling methods have been properly applied.

(k) Any suspension of a certificate of conformity under paragraph (d) of this section shall:

(1) Be made only after the manufacturer concerned has been offered an opportunity for a hearing conducted in accordance with §§ 90.512, 90.513, and 90.514 and

(2) Not apply to engines no longer in the possession of the manufacturer.

(l) After the Administrator suspends or revokes a certificate of conformity pursuant to this section and prior to the commencement of a hearing under § 90.512, if the manufacturer demonstrates to the Administrator's satisfaction that the decision to suspend, revoke, or void the certificate was based on erroneous information, the Administrator shall reinstate the certificate.

(m) To permit a manufacturer to avoid storing non-test engines when conducting an audit of a family subsequent to a failure of an SEA and while reauditing the failed family it may request that the Administrator conditionally reinstate the certificate for that family. The Administrator may reinstate the certificate subject to the condition that the manufacturer commits to recall all engines of that family produced from the time the certificate is conditionally reinstated if the family fails the subsequent audit at the level of the standard and to remedy any nonconformity at no expense to the owner.

§ 90.512 Request for public hearing.

(a) If the manufacturer disagrees with the Administrator's decision to suspend, revoke or void a certificate or disputes the basis for an automatic suspension pursuant to § 90.511(a), the manufacturer may request a public hearing.

(b) The manufacturer's request shall be filed with the Administrator not later than 15 days after the Administrator's notification of his or her decision to suspend, revoke or void, unless otherwise specified by the Administrator. The manufacturer shall simultaneously serve two copies of this request upon the Director of the Engine Programs and Compliance Division and file two copies with the Hearing Clerk of the Agency. Failure of the manufacturer to request a hearing within the time provided constitutes a waiver of the right to a hearing. Subsequent to the expiration of the period for requesting a hearing as of right, the Administrator may, in his or her discretion and for good cause shown, grant the manufacturer a hearing to contest the suspension, revocation or voiding.

(c) A manufacturer shall include in the request for a public hearing:

(1) A statement as to which engine configuration(s) within a family is to be the subject of the hearing;

(2) A concise statement of the issues to be raised by the manufacturer at the hearing, except that in the case of the hearing requested under § 90.511(j), the hearing is restricted to the following issues:

(i) Whether tests have been properly conducted (specifically, whether the tests were conducted in accordance with applicable regulations under this part and whether test equipment was properly calibrated and functioning);

(ii) Whether sampling plans have been properly applied (specifically, whether sampling procedures specified in Appendix A of this subpart were followed and whether there exists a basis for distinguishing engines produced at plants other than the one from which engines were selected for testing which would invalidate the Administrator's decision under § 90.511(c));

(3) A statement specifying reasons why the manufacturer believes it will prevail on the merits of each of the issues raised; and

(4) A summary of the evidence which supports the manufacturer's position on each of the issues raised.

(d) A copy of all requests for public hearings will be kept on file in the Office of the Hearing Clerk and will be made available to the public during Agency business hours.

[60 FR 34598, July 3, 1995, as amended at 64 FR 15245, Mar. 30, 1999]

§ 90.513 Administrative procedures for public hearing.

(a) The Presiding Officer shall be an Administrative Law Judge appointed pursuant to 5 U.S.C. 3105 (see also 5 CFR part 930 as amended).

(b) The Judicial Officer shall be an officer or employee of the Agency appointed as a Judicial Officer by the Administrator, pursuant to this section, who shall meet the qualifications and perform functions as follows:

(1) *Qualifications.* A Judicial Officer may be a permanent or temporary employee of the Agency who performs other duties for the Agency. The Judicial Officer shall not be employed by the Office of Enforcement or have any connection with the preparation or presentation of evidence for a hearing held pursuant to this subpart. The Judicial Officer shall be a graduate of an accredited law school and a member in good standing of a recognized Bar Association of any state or the District of Columbia.

(2) *Functions.* The Administrator may consult with the Judicial Officer or delegate all or part of the Administrator's authority to act in a given case under this section to a Judicial Officer, provided that this delegation does not preclude the Judicial Officer from referring any motion or case to the Administrator when the Judicial Officer determines such referral to be appropriate.

(c) For the purposes of this section, one or more Judicial Officers may be designated. As work requires, a Judicial Officer may be designated to act for the purposes of a particular case.

(d) *Summary decision.* (1) In the case of a hearing requested under § 90.511(j), when it clearly appears from the data and other information contained in the request for a hearing that no genuine and substantial question of fact exists with respect to the issues specified in § 90.512(c)(2), the Administrator shall enter an order denying the request for a hearing and reaffirming the original decision to suspend or revoke a certificate of conformity, if this decision has been made pursuant to § 90.511(e) at any time prior to the decision to deny the request for a hearing.

(2) In the case of a hearing requested under § 90.512 to challenge a proposed suspension of a certificate of conformity for the reasons specified in § 90.511(d), when it clearly appears from the data and other information contained in the request for the hearing that no genuine and substantial question of fact exists with respect to the issue of whether the refusal to comply with the provisions of a test order or any other requirement of § 90.503 was caused by conditions and circumstances outside the control of the manufacturer, the Administrator shall enter an order denying the request for a hearing and suspending the certificate of conformity.

(3) Any order issued under paragraph (d)(1) or (d)(2) of this section has the force and effect of a final decision of the Administrator, as issued pursuant to § 90.515.

(4) If the Administrator determines that a genuine and substantial question of fact does exist with respect to any of the issues referred to in paragraphs (d)(1) and (d)(2) of this section, the Administrator shall grant the request for a hearing and publish a notice

of public hearing in the FEDERAL REGISTER or by such other means as the Administrator finds appropriate to provide notice to the public.

(e) *Filing and service.* (1) An original and two copies of all documents or papers required or permitted to be filed pursuant to this section and § 90.512(c) must be filed with the Hearing Clerk of the Agency. Filing is considered timely if mailed, as determined by the postmark, to the Hearing Clerk within the time allowed by this section and § 90.512(b). If filing is to be accomplished by mailing, the documents must be sent to the address set forth in the notice of public hearing referred to in paragraph (d)(4) of this section.

(2) To the maximum extent possible, testimony will be presented in written form. Copies of written testimony will be served upon all parties as soon as practicable prior to the start of the hearing. A certificate of service will be provided on or accompany each document or paper filed with the Hearing Clerk. Documents to be served upon the Director of the Manufacturers Operations Division must be sent by registered mail to: Director, Manufacturers Operations Division, U.S. Environmental Protection Agency, 6405–J, 401 M St., SW., Washington, DC 20460. Service by registered mail is complete upon mailing.

(f) *Computation of time.* (1) In computing any period of time prescribed or allowed by this section, except as otherwise provided, the day of the act or event from which the designated period of time begins to run is not included. Saturdays, Sundays, and federal legal holidays are included in computing the period allowed for the filing of any document or paper, except that when the period expires on a Saturday, Sunday, or federal legal holiday, the period is extended to include the next following business day.

(2) A prescribed period of time within which a party is required or permitted to do an act is computed from the time of service, except that when service is accomplished by mail, three days will be added to the prescribed period.

(g) *Consolidation.* The Administrator or the Presiding Officer in his or her discretion may consolidate two or more proceedings to be held under this section for the purpose of resolving one or more issues whenever it appears that consolidation will expedite or simplify consideration of these issues. Consolidation does not affect the right of any party to raise issues that could have been raised if consolidation had not occurred.

(h) *Hearing date.* To the extent possible, hearings under § 90.512 will be scheduled to commence within 14 days of receipt of the application in § 90.512.

§ 90.514 Hearing procedures.

The procedures provided in § 86.1014–84 (i) to (s) apply for hearings requested pursuant to § 90.512, suspension, revocation, or voiding of a certificate of conformity.

§ 90.515 Appeal of hearing decision.

The procedures provided in § 86.1014–84 (t) to (aa) apply for appeals filed with respect to hearings held pursuant to § 90.514.

§ 90.516 Treatment of confidential information.

The provisions for treatment of confidential information described in § 90.4 apply to this subpart.

APPENDIX A TO SUBPART F OF PART 90—SAMPLING PLANS FOR SELECTIVE ENFORCEMENT AUDITING OF SMALL NONROAD ENGINES

TABLE 1—SAMPLING PLAN CODE LETTER

Annual engine family sales	Code letter
50–99	A
100–299	B
300–499	C
500 or greater	D

TABLE 2—SAMPLE PLAN FOR CODE LETTER "A"

[Sample inspection criteria]

Stage	Pass No.	Fail No.	Stage	Pass No.	Fail No.1
1	(1)	(2)	16	6	11
2	(1)	(2)	17	7	12
3	(1)	(2)	18	7	12
4	0	(2)	19	8	13
5	0	(2)	20	8	13
6	1	6	21	9	14
7	1	7	22	10	14
8	2	7	23	10	15
9	2	8	24	11	15
10	3	8	25	11	16
11	3	8	26	12	16
12	4	9	27	12	17

TABLE 2—SAMPLE PLAN FOR CODE LETTER "A"—Continued

[Sample inspection criteria]

Stage	Pass No.	Fail No.	Stage	Pass No.	Fail No.1
13	5	10	28	13	17
14	5	10	29	14	17
15	6	11	30	16	17

[1] Test sample passing not permitted at this stage.
[2] Test sample failure not permitted at this stage.

TABLE 3—SAMPLING PLAN FOR CODE LETTER "B"

[Sample Inspection Criteria]

Stage	Pass No.	Fail No.
1	(1)	(2)
2	(1)	(2)
3	(1)	(2)
4	(1)	(2)
5	0	(2)
6	1	6
7	1	7
8	2	7
9	2	8
10	3	8
11	3	9
12	4	9
13	4	10
14	5	10
15	5	11
16	6	12
17	6	12
18	7	13
19	8	13
10	8	14
21	9	14
22	9	15
23	10	15
24	10	16
25	11	16
26	11	17
27	12	17
28	12	18
29	13	18
30	13	19
31	14	19
32	14	20
33	15	20
34	16	21
35	16	21
36	17	22
37	17	22
38	18	22
39	18	22
40	21	22

[1] Test sample passing not permitted at this stage.
[2] Test sample failure not permitted at this stage.

TABLE 4—SAMPLING PLAN FOR CODE LETTER "C"

[Sample Inspection Criteria]

Stage	Pass No.	Fail No.
1	(1)	(2)
2	(1)	(2)
3	(1)	(2)

TABLE 4—SAMPLING PLAN FOR CODE LETTER "C"—Continued

[Sample Inspection Criteria]

Stage	Pass No.	Fail No.
4	(1)	(2)
5	0	(2)
6	0	6
7	1	7
8	2	7
9	2	8
10	3	9
11	3	9
12	4	10
13	4	10
14	5	11
15	5	11
16	6	12
17	6	12
18	7	13
19	7	13
20	8	14
21	8	14
22	9	15
23	10	15
24	10	16
25	11	16
26	11	17
27	12	17
28	12	18
29	13	18
30	13	19
31	14	19
32	14	20
33	15	20
34	15	21
35	16	21
36	16	22
37	17	22
38	18	23
39	18	23
40	19	24
41	19	24
42	20	25
43	20	25
44	21	26
45	21	27
46	22	27
47	22	27
48	23	27
49	23	27
50	26	27

[1] Test sample passing not permitted at this stage.
[2] Test sample failure not permitted at this stage.

TABLE 5—SAMPLING PLAN FOR CODE LETTER "D"

[Sample Inspection Criteria]

Stage	Pass No.	Fail No.
1	(1)	(2)
2	(1)	(2)
3	(1)	(2)
4	(1)	(2)
5	0	(2)
6	0	6
7	1	7
8	2	8
9	2	8
10	3	9
11	3	9

TABLE 5—SAMPLING PLAN FOR CODE LETTER "D"—Continued

[Sample Inspection Criteria]

Stage	Pass No.	Fail No.
12	4	10
13	4	10
14	5	11
15	5	11
16	6	12
17	6	12
18	7	13
19	7	13
20	8	14
21	8	14
22	9	15
23	9	15
24	10	16
25	11	16
26	11	17
27	12	17
28	12	18
29	13	19
30	13	19
31	14	20
32	14	20
33	15	21
34	15	21
35	16	22
36	16	22
37	17	23
38	17	23
39	18	24
40	18	24
41	19	25
42	19	26
43	20	26
44	21	27
45	21	27
46	22	28
47	22	28
48	23	29
49	23	29
50	24	30
51	24	30
52	25	31
53	25	31
54	26	32
55	26	32
56	27	33
57	27	33
58	28	33
59	28	33
60	32	33

[1] Test sample passing not permitted at this stage.
[2] Test sample failure not permitted at this stage.

Subpart G—Importation of Nonconforming Engines

§ 90.601 Applicability.

(a) Except where otherwise indicated, this subpart is applicable to engines and vehicles which are offered for importation or imported into the United States and for which the Administrator has promulgated regulations under subpart B of this part prescribing emission standards, but which are not covered by certificates of conformity issued under section 213 and section 206(a) of the Clean Air Act (that is, which are nonconforming engines as defined below) and under subpart B of this part at the time of importation or conditional importation, as applicable. Compliance with regulations under this subpart shall not relieve any person or entity from compliance with other applicable provisions of the Clean Air Act.

(b) Regulations prescribing further procedures for the importation of small SI engines into the Customs territory of the United States, as defined in 19 U.S.C. 1202, are set forth in U.S. Customs Service regulations.

(c) Importers must complete the appropirate EPA declaration form before importing an engine. These forms are available on the Internet at *http://www.epa.gov/OTAQ/imports/* or by phone at 734–214–4100. Importers must keep the forms for five years and make them available promptly upon request.

[60 FR 34598, July 3, 1995, as amended at 73 FR 59182, Oct. 8, 2008]

§ 90.602 Definitions.

The definitions in subpart A of this part apply to this subpart. The following definitions also apply to this subpart.

Certificate of conformity. The document issued by the Administrator under section 213 and section 206(a) of the Act.

Nonconforming engine. An engine which is not covered by a certificate of conformity prior to final or conditional admission (or for which such coverage has not been adequately demonstrated to EPA).

Original engine manufacturer (OEM). The entity which originally manufactured the engine.

Original production (OP) year. The calendar year in which the engine was originally produced by the OEM.

Original production (OP) years old. The age of an engine as determined by subtracting the original production year of the engine from the calendar year of importation.

Production changes. Those changes in the engine configuration, equipment or calibration which are made by an OEM

in the course of engine production and required to be reported under § 90.123.

United States. United States includes the Customs territory of the United States as defined in 19 U.S.C. 1202, and the Virgin Islands, Guam, American Samoa and the Commonwealth of the Northern Mariana Islands.

§ 90.603 [Reserved]

§ 90.604 General requirements.

(a) A nonconforming engine offered for importation into the United States may only be imported for purposes other than resale under § 90.611, or under the provisions of § 90.612, provided that an exemption or exclusion is granted by the Administrator.

(b) Final admission shall not be granted unless:

(1) The engine is imported for purposes other than resale under § 90.611; or

(2) The engine is exempted or excluded under § 90.612.

(c) An engine offered for importation may be admitted into the United States. In order to obtain admission, the importer must submit to the Administrator a written request for approval containing the following:

(1) Identification of the importer and the importer's address, telephone number, and taxpayer identification number;

(2) Identification of the engine owner, the owner's address, telephone number, and taxpayer identification number;

(3) Identification of the engine including make, model, identification number, and original production year;

(4) Information indicating under what provision of these regulations the engine is to be imported;

(5) Identification of the place where the subject engine is to be stored until EPA approval of the importer's application to the Administrator for final admission;

(6) Authorization for EPA enforcement officers to conduct inspections or testing otherwise permitted by the Act or regulations thereunder; and

(7) Such other information as is deemed necessary by the Administrator.

§ 90.605–90.610 [Reserved]

§ 90.611 Importation for purposes other than resale.

The provisions of 40 CFR 1054.630 apply for importation of nonconforming engines for personal use.

[74 FR 8423, Feb. 24, 2009]

§ 90.612 Exemptions and exclusions.

(a) Individuals shall be eligible for importing engines into the United States under the provisions of this section, unless otherwise specified.

(b) Notwithstanding other requirements of this subpart, an engine entitled to one of the temporary exemptions of this paragraph may be conditionally admitted into the United States if prior written approval for the conditional admission is obtained from the Administrator. Conditional admission is to be under U.S. Customs Service bond. The Administrator may request that the U.S. Customs Service require a specific bond amount to ensure compliance with the requirements of the Act and this subpart. A written request for approval from the Administrator is to contain the identification required in § 90.604(c) and information that demonstrates that the importer is entitled to the exemption. Noncompliance with provisions of this section may result in the forfeiture of the total amount of the bond or exportation of the engine. The following temporary exemptions are permitted by this paragraph:

(1) *Exemption for repairs or alterations*. A person may conditionally import under bond a nonconforming engine solely for purpose of repairs or alterations. The engine may not be operated in the United States other than for the sole purpose of repair or alteration or shipment to the point of repair or alteration and to the port of export. It may not be sold or leased in the United States and is to be exported upon completion of the repairs or alterations.

(2) *Testing exemption*. A test engine may be conditionally imported by a person subject to the requirements of § 90.905. A test engine may be operated in the United States provided that the operation is an integral part of the test. This exemption is limited to a period not exceeding one year from the

date of importation unless a request is made by the appropriate importer concerning the engine in accordance with § 90.905(f) for a subsequent one-year period.

(3) *Display exemptions.* (i) An engine intended solely for display may be conditionally imported subject to the requirements of § 90.907.

(ii) A display engine may be imported by any person for purposes related to a business or the public interest. Such purposes do not include collections normally inaccessible or unavailable to the public on a daily basis, display of an engine at a dealership, private use, or other purpose that the Administrator determines is not appropriate for display exemptions. A display engine may not be sold in the United States and may not be operated in the United States except for the operation incident and necessary to the display purpose.

(iii) A temporary display exemption will be granted for 12 months (one year) or for the duration of the display purpose, whichever is shorter. Two extensions of up to 12 months (one year) each are available upon approval by the Administrator. In no circumstances, however, may the total period of exemption exceed 36 months (three years).

(c) Notwithstanding any other requirement of this subpart, an engine may be finally admitted into the United States under this paragraph if prior written approval for such final admission is obtained from the Administrator. Conditional admission of these engines under this subpart is not permitted for the purpose of obtaining such written approval from the Administrator. A request for approval is to contain the identification information required in § 90.604(c) and information that demonstrates that the importer is entitled to the exemption or exclusion. The following exemptions or exclusions are permitted by this paragraph:

(1) *National security exemption.* An engine may be imported under the national security exemption found at § 90.908.

(2) *Hardship exemption.* The Administrator may exempt on a case-by-case basis an engine from federal emission requirements to accommodate unforeseen cases of extreme hardship or extraordinary circumstances.

(3) *Exemption for engines identical to United States certified versions.* (i) A person (including businesses) is eligible for importing an engine into the United States under the provisions of this paragraph. An exemption will be granted if the engine:

(A) is owned by the importer;

(B) is not offered for importation for the purpose of resale; and

(C) is proven to be identical, in all material respects, to an engine certified by the original equipment manufacturer (OEM) for sale in the United States or is proven to have been modified to be identical, in all material respects, to an engine certified by the OEM for sale in the United States according to complete written instructions provided by the OEM's United States representative, or his/her designee.

(ii) *Proof of Conformity.* (A) Documentation submitted pursuant to this section for the purpose of proving conformity of individual engines is to contain sufficiently organized data or evidence demonstrating that the engine identified pursuant to § 90.604(c) is identical, in all material respects, to an engine identified in an OEM's application for certification.

(B) If the documentation does not contain all the information required by this part, or is not sufficiently organized, EPA will notify the importer of any areas of inadequacy, and that the documentation will not receive further consideration until the required information or organization is provided.

(C) If EPA determines that the documentation does not clearly or sufficiently demonstrate that an engine is eligible for importation, EPA will notify the importer in writing.

(D) If EPA determines that the documentation clearly and sufficiently demonstrates that an engine is eligible for importation, EPA will grant approval for importation and notify the importer in writing.

(d) Foreign diplomatic and military personnel may import a nonconforming engine without bond. At the time of admission, the importer shall submit to the Administrator the written report required in § 90.604(a) and a statement

from the U.S. Department of State confirming qualification for this exemption. Foreign military personnel may, in lieu of a statement from the U.S. Department of State, submit to the Administrator a copy of their orders for duty in the United States. The engine may not be sold in the United States and must be exported if the individual's diplomatic status is no longer applicable, as determined by the Department of State, or the foreign military orders for duty in the United States are no longer applicable, unless subsequently brought into conformity with U.S. emission requirements.

(e) *Competition exclusion.* A nonconforming engine may be conditionally admitted by any person provided the importer demonstrates to the Administrator that the engine is used to propel a nonroad vehicle used solely for competition and obtains prior written approval from the Administrator. A nonconforming engine imported pursuant to this paragraph may not be operated in the United States except for that operation incident and necessary for the competition purpose, unless subsequently brought into conformity with United States emission requirements in accordance with § 90.612(c)(3).

(f) *Exclusions/exemptions based on date of original manufacture.* (1) Notwithstanding any other requirements of this subpart, engines originally manufactured prior to model year 1997 are excluded from the requirements of the Act in accordance with section 213 of the Act and may be imported by any person.

(2) Notwithstanding other requirements of this subpart, an engine not subject to an exclusion under § 90.612(f)(1) but greater than 20 original production (OP) years old is entitled to an exemption from the requirements of the Act, provided that it has not been modified in those 20 OP years. At the time of admission, the importer shall submit to the Administrator the written report required in § 90.604(c).

(g) Applications for exemptions and exclusions provided for in paragraphs (b), (c), and (e) of this section are to be mailed to: U.S. Environmental Protection Agency, Office of Mobile Sources, Engine Compliance Programs Group (6403–J), Washington, DC 20460, Attention: Imports.

[60 FR 34598, July 3, 1995, as amended at 64 FR 15245, Mar. 30, 1999; 70 FR 40450, July 13, 2005]

§ 90.613 Prohibited acts; penalties.

(a) The importation of an engine which is not covered by a certificate of conformity other than in accordance with this subpart and the entry regulations of the U.S. Customs Service is prohibited. Failure to comply with this subpart is a violation of section 213(d) and section 203 of the Act.

(b) Unless otherwise permitted by this subpart, during a period of conditional admission, the importer of an engine shall not:

(1) Register, license, or operate the engine in the United States; or

(2) Sell or offer the engine for sale.

(c) An engine conditionally admitted pursuant to § 90.612(b), (d), or (e) and not granted final admission within the period of time specified for such conditional admission in the written prior approval obtained from EPA, or within such additional time as designated by the Administrator, is deemed to be unlawfully imported into the United States in violation of section 213(d) and section 203 of the Act, unless the engine has been delivered to the U.S. Customs Service for export or other disposition under applicable Customs laws and regulations. An engine not so delivered is subject to seizure by the U.S. Customs Service.

(d) An importer who violates section 213(d) and section 203 of the Act is subject to a civil penalty under section 205 of the Act of not more than $32,500 for each engine subject to the violation. In addition to the penalty provided in the Act, where applicable, under the exemption provisions of § 90.612(b), a person or entity who fails to deliver the engine to the U.S. Customs Service is liable for liquidated damages in the amount of the bond required by applicable Customs laws and regulations. The maximum penalty value listed in this paragraph (d) is shown for calendar year 2004. Maximum penalty limits for later years may be adjusted based on the Consumer Price Index. The specific regulatory provisions for

changing the maximum penalties, published in 40 CFR part 19, reference the applicable U.S. Code citation on which the prohibited action is based.

[60 FR 34598, July 3, 1995, as amended at 70 FR 40450, July 13, 2005]

§ 90.614 Treatment of confidential information.

The provisions for treatment of confidential information described in § 90.4 apply to this subpart.

§ 90.615 Model year restrictions related to imported engines and equipment.

The provisions of 40 CFR 1068.360 apply starting January 1, 2009. These provisions limit the importation of engines or equipment after new emission standards have started to apply if the engines or equipment were built before the emission standards took effect.

[73 FR 59182, Oct. 8, 2008]

Subpart H—Manufacturer Production Line Testing Program

SOURCE: 64 FR 15245, Mar. 30, 1999, unless otherwise noted.

§ 90.701 Applicability.

(a) The requirements of this subpart are applicable to all Phase 2 nonroad handheld and nonhandheld engines families subject to the provisions of subpart A of this part unless otherwise exempted in this subpart.

(b) The procedures described in this subpart are optional for small volume engine manufacturers and small volume engine families as defined in this part. Small volume engine manufacturers and small volume engine families for which the manufacturer opts not to conduct testing under this subpart pursuant to this paragraph shall remain subject to the Selective Enforcement Auditing procedures of subpart F of this part.

(c) Engine families for which the manufacturer opts to conduct in-use testing pursuant to subpart M of this part are exempt from this subpart, but shall remain subject to the Selective Enforcement Auditing procedures of subpart F of this part.

[64 FR 15245, Mar. 30, 1999, as amended at 65 FR 24313, Apr. 25, 2000]

§ 90.702 Definitions.

The definitions in subpart A of this part apply to this subpart. The following definitions also apply to this subpart.

Configuration means any subclassification of an engine family which can be described on the basis of gross power, emission control system, governed speed, injector size, engine calibration, and other parameters as designated by the Administrator.

Test sample means the collection of engines selected from the population of an engine family for emission testing.

§ 90.703 Production line testing by the manufacturer.

(a) Manufacturers of small SI engines shall test production line engines from each engine family according to the provisions of this subpart.

(b) Production line engines must be tested using the test procedure specified in subpart E of this part except that the Administrator may approve minor variations that the Administrator deems necessary to facilitate efficient and economical testing where the manufacturer demonstrates to the satisfaction of the Administrator that such variations will not significantly impact the test results. Any adjustable engine parameter must be set to values or positions that are within the range recommended to the ultimate purchaser, unless otherwise specified by the Administrator. The Administrator may specify values within or without the range recommended to the ultimate purchaser.

§ 90.704 Maintenance of records; submission of information.

(a) The manufacturer of any new small SI engine subject to any of the provisions of this subpart must establish, maintain, and retain the following adequately organized and indexed records:

(1) *General records.* A description of all equipment used to test engines in accordance with § 90.703. Subpart D of this part sets forth relevant equipment

requirements in §§ 90.304, 90.305, 90.306, 90.307, 90.308, 90.309, 90.310 and 90.313.

(2) *Individual records.* These records pertain to each production line test conducted pursuant to this subpart and include:

(i) The date, time, and location of each test;

(ii) The number of hours of service accumulated on the test engine when the test began and ended;

(iii) The names of all supervisory personnel involved in the conduct of the production line test;

(iv) A record and description of any adjustment, repair, preparation or modification performed prior to and/or subsequent to approval by the Administrator pursuant to § 90.707(b)(1), giving the date, associated time, justification, name(s) of the authorizing personnel, and names of all supervisory personnel responsible for the conduct of the repair;

(v) If applicable, the date the engine was shipped from the assembly plant, associated storage facility or port facility, and the date the engine was received at the testing facility;

(vi) A complete record of all emission tests performed pursuant to this subpart (except tests performed directly by EPA), including all individual worksheets and/or other documentation relating to each test, or exact copies thereof, in accordance with the record requirements specified in §§ 90.405 and 90.406; and

(vii) A brief description of any significant events during testing not otherwise described under paragraph (a)(2) of this section, commencing with the test engine selection process and including such extraordinary events as engine damage during shipment.

(3) The manufacturer must establish, maintain and retain general records, pursuant to paragraph (a)(1) of this section, for each test cell that can be used to perform emission testing under this subpart.

(b) The manufacturer must retain all records required to be maintained under this subpart for a period of one year after completion of all testing required for the engine family in a model year. Records may be retained as hard copy (i.e., on paper) or reduced to microfilm, floppy disk, or some other method of data storage, depending upon the manufacturer's record retention procedure; provided, that in every case, all the information contained in the hard copy is retained.

(c) The manufacturer must, upon request by the Administrator, submit the following information with regard to engine production:

(1) Projected production or actual production for each engine configuration within each engine family for which certification has been requested and/or approved;

(2) Number of engines, by configuration and assembly plant, scheduled for production or actually produced.

(d) Nothing in this section limits the Administrator's discretion to require a manufacturer to establish, maintain, retain or submit to EPA information not specified by this section and otherwise permitted by law.

(e) All reports, submissions, notifications, and requests for approval made under this subpart must be addressed to: Manager, Engine Compliance Programs Group (6403J), U.S. Environmental Protection Agency, Washington, DC 20460.

(f) The manufacturer must electronically submit the results of its production line testing using EPA's standardized format. The Administrator may exempt manufacturers from this requirement upon written request with supporting justification.

§ 90.705 Right of entry and access.

(a) To allow the Administrator to determine whether a manufacturer is complying with the provisions of this subpart or other subparts of this part, one or more EPA enforcement officers may enter during operating hours and upon presentation of credentials any of the following places:

(1) Any facility, including ports of entry, where any engine to be introduced into commerce or any emission-related component is manufactured, assembled, or stored;

(2) Any facility where any test conducted pursuant to this or any other subpart or any procedure or activity connected with such test is or was performed;

(3) Any facility where any test engine is present; and

(4) Any facility where any record required under § 90.704 or other document relating to this subpart or any other subpart of this part is located.

(b) Upon admission to any facility referred to in paragraph (a) of this section, EPA enforcement officers are authorized to perform the following inspection-related activities:

(1) To inspect and monitor any aspect of engine manufacture, assembly, storage, testing and other procedures, and to inspect and monitor the facilities in which these procedures are conducted;

(2) To inspect and monitor any aspect of engine test procedures or activities, including test engine selection, preparation and service accumulation, emission test cycles, and maintenance and verification of test equipment calibration;

(3) To inspect and make copies of any records or documents related to the assembly, storage, selection, and testing of an engine; and

(4) To inspect and photograph any part or aspect of any engine and any component used in the assembly thereof that is reasonably related to the purpose of the entry.

(c) EPA enforcement officers are authorized to obtain reasonable assistance without cost from those in charge of a facility to help the officers perform any function listed in this subpart and they are authorized to request the manufacturer to make arrangements with those in charge of a facility operated for the manufacturer's benefit to furnish reasonable assistance without cost to EPA.

(1) Reasonable assistance includes, but is not limited to, clerical, copying, interpretation and translation services; the making available on an EPA enforcement officer's request of personnel of the facility being inspected during their working hours to inform the EPA enforcement officer of how the facility operates and to answer the officer's questions; and the performance on request of emission tests on any engine which is being, has been, or will be used for production line or other testing.

(2) By written request, signed by the Assistant Administrator for Air and Radiation, and served on the manufacturer, a manufacturer may be compelled to cause the personal appearance of any employee at such a facility before an EPA enforcement officer. Any such employee who has been instructed by the manufacturer to appear will be entitled to be accompanied, represented, and advised by counsel.

(d) EPA enforcement officers are authorized to seek a warrant or court order authorizing the EPA enforcement officers to conduct the activities authorized in this section, as appropriate, to execute the functions specified in this section. EPA enforcement officers may proceed *ex parte* to obtain a warrant or court order whether or not the EPA enforcement officers first attempted to seek permission from the manufacturer or the party in charge of the facility(ies) in question to conduct the activities authorized in this section.

(e) A manufacturer must permit an EPA enforcement officer(s) who presents a warrant or court order to conduct the activities authorized in this section as described in the warrant or court order. The manufacturer must also cause those in charge of its facility or a facility operated for its benefit to permit entry and access as authorized in this section pursuant to a warrant or court order whether or not the manufacturer controls the facility. In the absence of a warrant or court order, an EPA enforcement officer(s) may conduct the activities authorized in this section only upon the consent of the manufacturer or the party in charge of the facility(ies) in question.

(f) It is not a violation of this part or the Clean Air Act for any person to refuse to permit an EPA enforcement officer(s) to conduct the activities authorized in this section if the officer(s) appears without a warrant or court order.

(g) A manufacturer is responsible for locating its foreign testing and manufacturing facilities in jurisdictions where local law does not prohibit an EPA enforcement officer(s) from conducting the entry and access activities specified in this section. EPA will not attempt to make any inspections which it has been informed local foreign law prohibits.

§ 90.706 Engine sample selection.

(a) At the start of each model year, the small SI engine manufacturer will begin to randomly select engines from each engine family for production line testing at a rate of one percent of the projected production of that family. Each engine will be selected from the end of the assembly line.

(1) *For newly certified engine families:* After two engines are tested, the manufacturer will calculate the required sample size for the model year for each pollutant ($HC+NO_X$($NMHC+NO_X$) and CO) according to the Sample Size Equation in paragraph (b) of this section.

(2) *For carry-over engine families:* After one engine is tested, the manufacturer will combine the test with the last test result from the previous model year and then calculate the required sample size for the model year for each pollutant according to the Sample Size Equation in paragraph (b) of this section.

(b)(1) Manufacturers will calculate the required sample size for the model year for each pollutant for each engine family using the Sample Size Equation in this paragraph. N is calculated for each pollutant from each test result. The higher of the two values for the number N indicates the number of tests required for the model year for an engine family. N is recalculated for each pollutant after each test. Test results used to calculate the variables in the following Sample Size Equation must be final deteriorated test results as specified in § 90.709(c).

$$N = \left[\frac{(t_{95} \times \sigma)}{(x - FEL)} \right]^2 + 1$$

Where:

N = required sample size for the model year.

$_{95}$ = 95% confidence coefficient. It is dependent on the actual number of tests completed, n, as specified in the table in paragraph (b)(2) of this section. It defines one-tail, 95% confidence intervals.

σ = actual test sample standard deviation calculated from the following equation:

$$\sigma = \sqrt{\frac{\sum (X_i - x)^2}{n - 1}}$$

x_i = emission test result for an individual engine.

x = mean of emission test results of the actual sample.

FEL = Family Emission Limit or standard if no FEL.

n = The actual number of tests completed in an engine family.

(2) The following table specifies the Actual Number of Tests (n) & 1-tail Confidence Coefficients (t_{95}):

n	t_{95}	n	t_{95}	n	t_{95}
2	6.31	12	1.80	22	1.72
3	2.92	13	1.78	23	1.72
4	2.35	14	1.77	24	1.71
5	2.13	15	1.76	25	1.71
6	2.02	16	1.75	26	1.71
7	1.94	17	1.75	27	1.71
8	1.90	18	1.74	28	1.70
9	1.86	19	1.73	29	1.70
10	1.83	20	1.73	30	1.70
11	1.81	21	1.72	∞	1.645

(3) A manufacturer must distribute the testing of the remaining number of engines needed to meet the required sample size N, evenly throughout the remainder of the model year.

(4) After each new test, the required sample size, N, is recalculated using updated sample means, sample standard deviations and the appropriate 95% confidence coefficient.

(5) A manufacturer must continue testing and updating each engine family's sample size calculations according to paragraphs (b)(1) through (b)(4) of this section until a decision is made to stop testing as described in paragraph (b)(6) of this section or a noncompliance decision is made pursuant to § 90.710(b).

(6) If, at any time throughout the model year, the calculated required

sample size, N, for an engine family is less than or equal to the actual sample size, n, and the sample mean, x, for HC + NO_X (NMHC+NO_X) and CO is less than or equal to the FEL or standard if no FEL, the manufacturer may stop testing that engine family.

(7) If, at any time throughout the model year, the sample mean, x, for HC + NO_X (NMHC+NO_X) or CO is greater than the FEL or standard if no FEL, the manufacturer must continue testing that engine family at the appropriate maximum sampling rate.

(8) The maximum required sample size for an engine family (regardless of the required sample size, N, as calculated in paragraph (b)(1) of this section) is the lesser of thirty tests per model year or one percent of projected annual production for that engine family for that model year.

(9) Manufacturers may elect to test additional engines. Additional engines, whether tested in accordance with the testing procedures specified in § 90.707 or not, may not be included in the Sample Size and Cumulative Sum equation calculations as defined in paragraph (b)(1) of this section and § 90.708(a), respectively. However, such additional test results may be used as appropriate to ''bracket'' or define the boundaries of the production duration of any emission nonconformity determined under this subpart. Such additional test data must be identified and provided to EPA with the submittal of the official CumSum results.

(c) The manufacturer must produce and assemble the test engines using its normal production and assembly process for engines to be distributed into commerce.

(d) No quality control, testing, or assembly procedures shall be used on any test engine or any portion thereof, including parts and subassemblies, that have not been or will not be used during the production and assembly of all other engines of that family, unless the Administrator approves the modification in production or assembly procedures in advance.

[64 FR 15245, Mar. 30, 1999; 64 FR 34313, June 25, 1999; 64 FR 35256, June 30, 1999; 64 FR 36423, July 6, 1999; 70 FR 40450, July 13, 2005]

§ 90.707 Test procedures.

(a)(1) For small SI engines subject to the provisions of this subpart, the prescribed test procedures are specified in subpart E of this part.

(2) The Administrator may, on the basis of a written application by a manufacturer, prescribe test procedures other than those specified in paragraph (a)(1) of this section for any small SI engine the Administrator determines is not susceptible to satisfactory testing using procedures specified in paragraph (a)(1) of this section.

(b)(1) The manufacturer may not adjust, repair, prepare, or modify any test engine and may not perform any emission test on any test engine unless this adjustment, repair, preparation, modification and/or test is documented in the manufacturer's engine assembly and inspection procedures and is actually performed by the manufacturer on every production line engine or unless this adjustment, repair, preparation, modification and/or test is required or permitted under this subpart or is approved in advance by the Administrator.

(2) The Administrator may adjust or cause to be adjusted any engine parameter which the Administrator has determined to be subject to adjustment for certification, Production Line Testing and Selective Enforcement Audit testing, to any setting within the physically adjustable range of that parameter, as determined by the Administrator, prior to the performance of any test. However, if the idle speed parameter is one which the Administrator has determined to be subject to adjustment, the Administrator may not adjust it or require that it be adjusted to any setting which causes a lower engine idle speed than would have been possible within the physically adjustable range of the idle speed parameter if the manufacturer had accumulated 12 hours of service on the engine under paragraph (c) of this section, all other parameters being identically adjusted for the purpose of the comparison. The manufacturer may be requested to supply information necessary to establish an alternate minimum idle speed. The Administrator, in making or specifying these adjustments, may consider the

effect of the deviation from the manufacturer's recommended setting on emission performance characteristics as well as the likelihood that similar settings will occur on in-use engines. In determining likelihood, the Administrator may consider factors such as, but not limited to, the effect of the adjustment on engine performance characteristics and information from similar in-use engines.

(c) *Service accumulation.* (1) Unless otherwise approved by the Administrator, prior to performing exhaust emission production line testing, the manufacturer may accumulate up to 12 hours of service on each test engine. For catalyst-equipped engines, the manufacturer must accumulate a number of hours equal to the number of hours accumulated to represent stabilized emissions on the engine used to obtain certification.

(2) Service accumulation must be performed in a manner using good engineering judgment to obtain emission results representative of production line engines.

(d) Unless otherwise approved by the Administrator, the manufacturer may not perform any maintenance on test engines after selection for testing.

(e) If an engine is shipped to a remote facility for production line testing, and an adjustment or repair is necessary because of shipment, the engine manufacturer must perform the necessary adjustment or repair only after the initial test of the engine, except in cases where the Administrator has determined that the test would be impossible or unsafe to perform or would permanently damage the engine. Engine manufacturers must report to the Administrator, in the quarterly report required by § 90.709(e), all adjustments or repairs performed on test engines prior to each test.

(f) If an engine cannot complete the service accumulation or an emission test because of a malfunction, the manufacturer may request that the Administrator authorize either the repair of that engine or its deletion from the test sequence.

(g) *Testing.* A manufacturer must test engines with the test procedure specified in subpart E of this part to demonstrate compliance with the applicable FEL (or standard where there is no FEL). If alternate or special test procedures pursuant to regulations at § 90.120 are used in certification, then those alternate procedures must be used in production line testing.

(h) *Retesting.* (1) If an engine manufacturer reasonably determines that an emission test of an engine is invalid because of a procedural error, test equipment problem, or engine performance problem that causes the engine to be unable to safely perform a valid test, the engine may be retested. A test is not invalid simply because the emission results are high relative to other engines of the family. Emission results from all tests must be reported to EPA. The engine manufacturer must also include a detailed explanation of the reasons for invalidating any test in the quarterly report required in § 90.709(e). If a test is invalidated because of an engine performance problem, the manufacturer must document in detail the nature of the problem and the repairs performed in order to use the after-repair test results for the original test results.

(2) Routine retests may be conducted if the manufacturer conducts the same number of tests on all engines in the family. The results of these tests must be averaged according to procedures of § 90.709.

§ 90.708 Cumulative Sum (CumSum) procedure.

(a) (1) Manufacturers must construct separate CumSum Equations for each regulated pollutant ($HC+NO_X$ ($NMHC+NO_X$) and CO) for each engine family. Test results used to calculate the variables in the CumSum Equations must be final deteriorated test results as defined in § 90.709(c). The CumSum Equation is constructed as follows:

$$C_i = \max[0\ 0R\ (C_{i-1} + X_i - (FEL + F))]$$

Where:

C_i=The current CumSum statistic.

C_{i-1}=The previous CumSum statistic. Prior to any testing, the CumSum statistic=0 (i.e. C_0=0).

X_i=The current emission test result for an individual engine.

FEL=Family Emission Limit (the standard if no FEL).

F=.25×σ.

(2) After each test pursuant to paragraph (a)(1) of this section, C_i is compared to the action limit, H, the quantity which the CumSum statistic must exceed, in two consecutive tests, before the engine family may be determined to be in noncompliance for a regulated pollutant for purposes of § 90.710.

Where:

H=The Action Limit. It is $5.0 \times \sigma$, and is a function of the standard deviation, σ.

σ=is the sample standard deviation and is recalculated after each test.

(b) After each engine is tested, the CumSum statistic shall be promptly updated according to the CumSum Equation in paragraph (a) of this section.

(c)(1) If, at any time during the model year, a manufacturer amends the application for certification for an engine family as specified in § 90.122(a) by performing an engine family modification (i.e. a change such as a running change involving a physical modification to an engine, a change in specification or setting, the addition of a new configuration, or the use of a different deterioration factor) with no changes to the FEL (where applicable), all previous sample size and CumSum statistic calculations for the model year will remain unchanged.

(2) If, at any time during the model year, a manufacturer amends the application for certification for an engine family as specified in § 90.122 (a) by modifying its FEL (where applicable) for future production, as a result of an engine family modification, the manufacturer must continue its calculations by inserting the new FEL into the sample size equation as specified in § 90.706(b)(1) and into the CumSum equation in paragraph (a) of this section. All previous calculations remain unchanged. If the sample size calculation indicates that additional tests are required, then those tests must be performed. CumSum statistic calculations must not indicate that the family has exceeded the action limit for two consecutive tests. Where applicable, the manufacturer's final credit report as required by § 90.210 must break out the credits that result from each FEL and corresponding CumSum analysis for the set of engines built to each FEL.

(3) If, at any time during the model year, a manufacturer amends the application for certification for an engine family as specified in § 90.122 (a) (or for an affected part of the year's production in cases where there were one or more mid-year engine family modifications), by modifying its FEL (where applicable) for past and/or future production, without performing an engine modification, all previous sample size and CumSum statistic calculations for the model year must be recalculated using the new FEL. If the sample size calculation indicates that additional tests are required, then those tests must be performed. The CumSum statistic recalculation must not indicate that the family has exceeded the action limit for two consecutive tests. Where applicable, the manufacturer's final credit report as required by § 90.210 must break out the credits that result from each FEL and corresponding CumSum analysis for the set of engines built to each FEL.

§ 90.709 Calculation and reporting of test results.

(a) Initial test results are calculated following the applicable test procedure specified in § 90.707 (a). The manufacturer rounds these results to the number of decimal places contained in the applicable emission standard expressed to one additional significant figure.

(b) Final test results are calculated by summing the initial test results derived in paragraph (a) of this section for each test engine, dividing by the number of tests conducted on the engine, and rounding to the same number of decimal places contained in the applicable standard expressed to one additional significant figure.

(c) The final deteriorated test results for each test engine are calculated by applying the appropriate deterioration factors, derived in the certification process for the engine to the final test results, and rounding to the same number of decimal places contained in the applicable standard.

(d) If, at any time during the model year, the CumSum statistic exceeds the applicable action limit, H, in two consecutive tests for any regulated pollutant, ($HC+NO_X$ ($NMHC+NO_X$) or CO) the engine family may be determined

to be in noncompliance and the manufacturer must notify EPA by contacting its official EPA certification representative within ten working days of such exceedance by the CumSum statistic.

(e) Within 45 calendar days of the end of each quarter, each engine manufacturer must submit to the Administrator a report which includes the following information:

(1) The location and description of the manufacturer's or other's exhaust emission test facilities which were utilized to conduct testing reported pursuant to this section;

(2) Total production and sample sizes, N and n, for each engine family;

(3) The FEL (standard, if no FEL) against which each engine family was tested;

(4) A description of the process to obtain engines on a random basis;

(5) A description of the test engines;

(6) For each test conducted:

(i) A description of the test engine, including:

(A) Configuration and engine family identification;

(B) Year, make, and build date;

(C) Engine identification number; and

(D) Number of hours of service accumulated on engine prior to testing;

(ii) Location where service accumulation was conducted and description of accumulation procedure and schedule;

(iii) Test number, date, test procedure used, initial test results before and after rounding, final test results before and after rounding and final deteriorated test results for all exhaust emission tests, whether valid or invalid, and the reason for invalidation, if applicable;

(iv) A complete description of any adjustment, modification, repair, preparation, maintenance, and/or testing which was performed on the test engine, was not reported pursuant to any other paragraph of this subpart, and will not be performed on all other production engines;

(v) A CumSum analysis, as required in §90.708, of the production line test results for each engine family; and

(vi) Any other information the Administrator may request relevant to the determination whether the new engines being manufactured by the manufacturer do in fact conform with the regulations with respect to which the certificate of conformity was issued;

(7) For each failed engine as defined in §90.710(a), a description of the remedy and test results for all retests as required by §90.711(g);

(8) The date of the end of the engine manufacturer's model year production for each engine family; and

(9) The following signed statement and endorsement by an authorized representative of the manufacturer:

This report is submitted pursuant to Sections 213 and 208 of the Clean Air Act. This production line testing program was conducted in complete conformance with all applicable regulations under 40 CFR Part 90. No emission-related changes to production processes or quality control procedures for the engine family tested have been made during this production line testing program that affect engines from the production line. All data and information reported herein is, to the best of (Company Name) knowledge, true and accurate. I am aware of the penalties associated with violations of the Clean Air Act and the regulations thereunder. (Authorized Company Representative.)

§90.710 Compliance with criteria for production line testing.

(a) A failed engine is one whose final deteriorated test results pursuant to §90.709(c), for $HC+NO_X$ ($NMHC+NO_X$) or CO exceeds the applicable Family Emission Limit (FEL) or standard if no FEL.

(b) An engine family shall be determined to be in noncompliance, if at any time throughout the model year, the CumSum statistic, C_i, for $HC+NO_X$ ($NMHC+NO_X$) or CO, is greater than the action limit, H, for that pollutant, for two consecutive tests.

§90.711 Suspension and revocation of certificates of conformity.

(a) The certificate of conformity is suspended with respect to any engine failing pursuant to §90.710(a) effective from the time that testing of that engine is completed.

(b) The Administrator may suspend the certificate of conformity for an engine family which is determined to be in noncompliance pursuant to §90.710(b). This suspension will not

occur before thirty days after the engine family is determined to be in noncompliance and the Administrator has notified the manufacturer of its intent to suspend. During this thirty day period the Administrator will work with the manufacturer to achieve appropriate production line changes to avoid the need to halt engine production, if possible. The Administrator will approve or disapprove any such production line changes proposed to address a family that has been determined to be in noncompliance under this subpart within 15 days of receipt. If the Administrator does not approve or disapprove such a proposed change within such time period, the proposed change shall be considered approved.

(c) If the results of testing pursuant to the regulations in this subpart indicate that engines of a particular family produced at one plant of a manufacturer do not conform to the regulations in this part with respect to which the certificate of conformity was issued, the Administrator may suspend the certificate of conformity with respect to that family for engines manufactured by the manufacturer at all other plants.

(d) Notwithstanding the fact that engines described in the application for certification may be covered by a certificate of conformity, the Administrator may suspend such certificate immediately in whole or in part if the Administrator finds any one of the following infractions to be substantial:

(1) The manufacturer refuses to comply with any of the requirements of this subpart.

(2) The manufacturer submits false or incomplete information in any report or information provided to the Administrator under this subpart.

(3) The manufacturer renders inaccurate any test data submitted under this subpart.

(4) An EPA enforcement officer is denied the opportunity to conduct activities authorized in this subpart and a warrant or court order is presented to the manufacturer or the party in charge of the facility in question.

(5) An EPA enforcement officer is unable to conduct activities authorized in § 90.705 because a manufacturer has located its facility in a foreign jurisdiction where local law prohibits those activities.

(e) The Administrator shall notify the manufacturer in writing of any suspension or revocation of a certificate of conformity in whole or in part, except that the certificate is immediately suspended with respect to any failed engines as provided for in paragraph (a) of this section.

(f) The Administrator may revoke a certificate of conformity for an engine family after the certificate has been suspended pursuant to paragraph (b) or (c) of this section if the proposed remedy for the nonconformity, as reported by the manufacturer to the Administrator, is one requiring a design change or changes to the engine and/or emission control system as described in the application for certification of the affected engine family.

(g) Once a certificate has been suspended for a failed engine, as provided for in paragraph (a) of this section, the manufacturer must take the following actions before the certificate is reinstated for that failed engine:

(1) Remedy the nonconformity;

(2) Demonstrate that the engine conforms to the applicable standards (FELs, where applicable) by retesting the engine in accordance with these regulations; and

(3) Submit a written report to the Administrator, described in § 90.709(e)(7), after successful completion of testing on the failed engine, which contains a description of the remedy and test results for each engine in addition to other information that may be required by this part.

(h) Once a certificate for a failed engine family has been suspended pursuant to paragraph (b) or (c) of this section, the manufacturer must take the following actions before the Administrator will consider reinstating the certificate:

(1) Submit a written report to the Administrator which identifies the reason for the noncompliance of the engines, describes the proposed remedy, including a description of any proposed quality control and/or quality assurance measures to be taken by the manufacturer to prevent future occurrences of the problem, and states the date on

which the remedies will be implemented; and

(2) Demonstrate that the engine family for which the certificate of conformity has been suspended does in fact comply with the regulations of this part by testing as many engines as needed so that the CumSum statistic, as calculated in § 90.708(a), falls below the action limit. Such testing must comply with the provisions of this part. If the manufacturer elects to continue testing individual engines after suspension of a certificate, the certificate is reinstated for any engine actually determined to be in conformance with the Family Emission Limits (or standards if no FEL) through testing in accordance with the applicable test procedures, provided that the Administrator has not revoked the certificate pursuant to paragraph (f) of this section.

(i) Once the certificate has been revoked for an engine family, if the manufacturer desires to continue introduction into commerce of a modified version of that family, the following actions must be taken before the Administrator may issue a certificate for that modified family:

(1) If the Administrator determines that the proposed change(s) in engine design may have an effect on emission performance deterioration, the Administrator shall notify the manufacturer within five working days after receipt of the report in paragraph (h)(1) of this section whether subsequent testing under this subpart will be sufficient to evaluate the proposed change or changes or whether additional testing will be required;

(2) After implementing the change or changes intended to remedy the nonconformity, the manufacturer must demonstrate that the modified engine family does in fact conform with the regulations of this part by testing as many engines as needed from the modified engine family so that the CumSum statistic, as calculated in § 90.708(a) using the newly assigned FEL if applicable, falls below the action limit; and

(3) When the requirements of paragraphs (i)(1) and (i)(2) of this section are met, the Administrator shall reissue the certificate or issue a new certificate, as the case may be, to include that family. As long as the CumSum statistic remains above the action limit, the revocation remains in effect.

(j) At any time subsequent to a suspension of a certificate of conformity for a test engine pursuant to paragraph (a) of this section, but not later than 15 days (or such other period as may be allowed by the Administrator) after notification of the Administrator's decision to suspend or revoke a certificate of conformity in whole or in part pursuant to paragraph (b), (c), or (f) of this section, a manufacturer may request a hearing as to whether the tests have been properly conducted or any sampling methods have been properly applied.

(k) Any suspension of a certificate of conformity under paragraph (d) of this section shall:

(1) Be made only after the manufacturer concerned has been offered an opportunity for a hearing conducted in accordance with §§ 90.712 and 90.713; and

(2) Not apply to engines no longer in the possession of the manufacturer.

(l) After the Administrator suspends or revokes a certificate of conformity pursuant to this section and prior to the commencement of a hearing under § 90.712, if the manufacturer demonstrates to the Administrator's satisfaction that the decision to suspend or revoke the certificate was based on erroneous information, the Administrator shall reinstate the certificate.

(m) To permit a manufacturer to avoid storing non-test engines while conducting subsequent testing of the noncomplying family, a manufacturer may request that the Administrator conditionally reinstate the certificate for that family. The Administrator may reinstate the certificate subject to the following condition: the manufacturer must commit to performing offsetting measures that remedy the nonconformity at no expense to the owners, and which are approved in advance by the Administrator for all engines of that family produced from the time the certificate is conditionally reinstated if the CumSum statistic does not fall below the action limit.

§ 90.712 Request for public hearing.

(a) If the manufacturer disagrees with the Administrator's decision to

suspend or revoke a certificate or disputes the basis for an automatic suspension pursuant to § 90.711(a), the manufacturer may request a public hearing.

(b) The manufacturer's request shall be filed with the Administrator not later than 15 days after the Administrator's notification of his or her decision to suspend or revoke, unless otherwise specified by the Administrator. The manufacturer shall simultaneously serve two copies of this request upon the Manager of the Engine Compliance Programs Group and file two copies with the Hearing Clerk for the Agency. Failure of the manufacturer to request a hearing within the time provided constitutes a waiver of the right to a hearing. Subsequent to the expiration of the period for requesting a hearing as of right, the Administrator may, in his or her discretion and for good cause shown, grant the manufacturer a hearing to contest the suspension or revocation.

(c) A manufacturer shall include in the request for a public hearing:

(1) A statement as to which engine configuration(s) within a family is to be the subject of the hearing; and

(2) A concise statement of the issues to be raised by the manufacturer at the hearing, except that in the case of the hearing requested under § 90.711(j), the hearing is restricted to the following issues:

(i) Whether tests have been properly conducted (specifically, whether the tests were conducted in accordance with applicable regulations under this part and whether test equipment was properly calibrated and functioning);

(ii) Whether sampling plans and statistical analyses have been properly applied (specifically, whether sampling procedures and statistical analyses specified in this subpart were followed and whether there exists a basis for distinguishing engines produced at plants other than the one from which engines were selected for testing which would invalidate the Administrator's decision under § 90.711(c));

(3) A statement specifying reasons why the manufacturer believes it will prevail on the merits of each of the issues raised; and

(4) A summary of the evidence which supports the manufacturer's position on each of the issues raised.

(d) A copy of all requests for public hearings will be kept on file in the Office of the Hearing Clerk and will be made available to the public during Agency business hours.

§ 90.713 Administrative procedures for public hearing.

The administrative procedures for a public hearing requested under this subpart shall be those procedures set forth in the regulations found at §§ 90.513 through 90.516. References in § 90.513 to § 90.511(j), § 90.512(c)(2), § 90.511(e), § 90.512, § 90.511(d), § 90.503, § 90.512(c) and § 90.512(b) shall be deemed to mean § 90.711(j), § 90.712(c)(2), § 90.711(e), § 90.712, § 90.711(d), § 90.703, and § 90.712(c) and § 90.712(b), respectively. References to ''test orders'' in § 90.513 are not applicable.

Subpart I—Emission-Related Defect Reporting Requirements, Voluntary Emission Recall Program, Ordered Recalls

§ 90.801 Applicability.

(a) The requirements of subpart I are applicable to all nonroad engines and vehicles subject to the provisions of subpart A of part 90. The requirement to report emission-related defects affecting a given class or category of engines will remain applicable for five years from the end of the calendar year in which such engines were manufactured.

(b) Phase 2 engines subject to provisions of subpart B of this part are subject to recall regulations specified in 40 CFR part 85, subpart S, except as otherwise provided in this section.

(c) Reference to section 214 of the Clean Air Act in 40 CFR 85.1801(a) is deemed to mean section 216 of the Clean Air Act.

(d) Reference to section 202 of the Act in 40 CFR 85.1802(a) is deemed to mean section 213 of the Act.

(e) Reference to ''family particulate emission limits'' as defined in part 86 promulgated under section 202 of the Act'' in 40 CFR 85.1803(a) and 85.1805(a)(1) is deemed to mean ''family emission limits'' as defined in subpart

C of this part 90 promulgated under section 213 of the Act''.

(f) Reference to ''vehicles or engines'' throughout 40 CFR part 85, subpart S is deemed to mean ''Phase 2 nonroad small SI engines at or below 19 kW.''

(g) In addition to the requirements in 40 CFR 85.1805(a)(9) for Phase 2 engines include a telephone number provided by the manufacturer, which may be used to report difficulty in obtaining recall repairs.

[60 FR 34598, July 3, 1995, as amended at 64 FR 15251, Mar. 30, 1999]

§ 90.802 Definitions.

The definitions in subpart A of this part apply to this subpart. All terms not defined herein or in subpart A have the meaning given them in the Act. The definitions of 40 CFR 85.1801 also apply to this part.

Emission-related defect means a defect in design, materials, or workmanship in a device, system, or assembly described in the approved application for certification which affects any applicable parameter or specification enumerated in 40 CFR part 85, Appendix VIII.

Voluntary emission recall means a repair, adjustment, or modification program voluntarily initiated and conducted by a manufacturer to remedy any emission-related defect for which notification of engine owners has been provided.

[60 FR 34598, July 3, 1995, as amended at 64 FR 15251, Mar. 30, 1999]

§ 90.803 Emission defect information report.

(a) A manufacturer must file a defect information report whenever, on the basis of data obtained subsequent to the effective date of these regulations:

(1) The manufacturer determines, in accordance with procedures established by the manufacturer to identify either safety-related or performance defects, that a specific emission-related defect exists; and

(2) A specific emission-related defect exists in 25 or more engines of a given engine family manufactured in the same certificate or model year.

(b) No report must be filed under this section for any emission-related defect corrected prior to the sale of the affected engines to ultimate purchasers.

(c) The manufacturer must submit defect information reports to EPA's Engine Compliance Programs Group not more than 15 working days after an emission-related defect is found to affect 25 or more engines manufactured in the same certificate or model year. Information required by paragraph (d) of this section that is either not available within 15 working days or is significantly revised must be submitted to EPA's Engine Compliance Programs Group as it becomes available.

(d) Each defect report must contain the following information in substantially the format outlined below:

(1) The manufacturer's corporate name.

(2) A description of the defect.

(3) A description of each class or category of engines potentially affected by the defect including make, model, model year, calendar year produced, and any other information required to identify the engines affected.

(4) For each class or category of engine described in response to paragraph (d)(3) of this section, the following must also be provided:

(i) The number of engines known or estimated to have the defect and an explanation of the means by which this number was determined.

(ii) The address of the plant(s) at which the potentially defective engines were produced.

(5) An evaluation of the emissions impact of the defect and a description of any operational problems which a defective engine might exhibit.

(6) Available emission data which relate to the defect.

(7) An indication of any anticipated manufacturer follow-up.

[60 FR 34598, July 3, 1995, as amended at 64 FR 15251, Mar. 30, 1999]

§ 90.804 Voluntary emissions recall.

(a) When any manufacturer initiates a voluntary emissions recall campaign involving 25 or more engines, the manufacturer must submit a report describing the manufacturer's voluntary emissions recall plan as prescribed by this section within 15 working days of the date owner notification was begun. The report must contain the following:

(1) A description of each class or category of engines recalled including the number of engines to be recalled, the model year, the make, the model, and such other information as may be required to identify the engines recalled;

(2) A description of the specific modifications, alterations, repairs, corrections, adjustments, or other changes to be made to correct the engines affected by the emission-related defect;

(3) A description of the method by which the manufacturer will notify engine owners and, if applicable, the method by which the manufacturer will determine the names and addresses of engine owners;

(4) A description of the proper maintenance or use, if any, upon which the manufacturer conditions eligibility for repair under the recall plan, an explanation of the manufacturer's reasons for imposing any such conditions, and a description of the proof to be required of an engine owner to demonstrate compliance with any such conditions;

(5) A description of the procedure to be followed by engine owners to obtain correction of the nonconformity. This may include designation of the date on or after which the owner can have the nonconformity remedied, the time reasonably necessary to perform the labor to remedy the defect, and the designation of facilities at which the defect can be remedied;

(6) A description of the class of persons other than dealers and authorized warranty agents of the manufacturer who will remedy the defect;

(7) When applicable, three copies of any letters of notification to be sent engine owners;

(8) A description of the system by which the manufacturer will assure that an adequate supply of parts is available to perform the repair under the plan, and that the supply remains both adequate and responsive to owner demand;

(9) Three copies of all necessary instructions to be sent to those persons who are to perform the repair under the recall plan;

(10) A description of the impact of the proposed changes on fuel consumption, performance, and safety of each class or category of engines to be recalled;

(11) A sample of any label to be applied to engines which participated in the voluntary recall campaign.

(b) The manufacturer must submit at least one report on the progress of the recall campaign. Such report must be submitted no later than 18 months from the date notification was begun and include the following information:

(1) The methods used to notify both engine owners, dealers and other individuals involved in the recall campaign;

(2) The number of engines known or estimated to be affected by the emission-related defect and an explanation of the means by which this number was determined;

(3) The number of engines actually receiving repair under the plan; and

(4) The number of engines determined to be ineligible for remedial action due to a failure to properly maintain or use such engines.

§ 90.805 Reports, voluntary recall plan filing, record retention.

(a) Send the defect report, voluntary recall plan, and the voluntary recall progress report to: Group Manager, Engine Compliance Programs Group, (6403–J), Environmental Protection Agency, Washington, DC 20460.

(b) Retain the information gathered by the manufacturer to compile the reports for not less than five years from the date of the manufacture of the engines. The manufacturer must make this information available to duly authorized officials of the EPA upon request.

[60 FR 34598, July 3, 1995, as amended at 64 FR 15251, Mar. 30, 1999]

§ 90.806 Responsibility under other legal provisions preserved.

The filing of any report under the provisions of this subpart does not affect a manufacturer's responsibility to file reports or applications, obtain approval, or give notice under any provision of law.

§ 90.807 Disclaimer of production warranty applicability.

(a) The act of filing an Emission Defect Information Report is inconclusive

as to the existence of a defect subject to the warranty provided by subpart L of this part.

(b) A manufacturer may include on each page of its Emission Defect Information Report a disclaimer stating that the filing of a Defect Information Report pursuant to these regulations is not conclusive as to the applicability of the warranty provided by subpart L of this part.

§ 90.808 Ordered recall provisions.

(a) Effective with respect to Phase 2 small SI engines:

(1) If the Administrator determines that a substantial number of any class or category of engines, although properly maintained and used, do not conform to the regulations prescribed under section 213 of the Act when in actual use throughout their useful life (as defined under § 90.105), the Administrator shall immediately notify the manufacturer of such nonconformity and require the manufacturer to submit a plan for remedying the nonconformity of the engines with respect to which such notification is given.

(i) The manufacturer's plan shall provide that the nonconformity of any such engines which are properly used and maintained will be remedied at the expense of the manufacturer.

(ii) If the manufacturer disagrees with such determination of nonconformity and so advises the Administrator, the Administrator shall afford the manufacturer and other interested persons an opportunity to present their views and evidence in support thereof at a public hearing. Unless, as a result of such hearing, the Administrator withdraws such determination of nonconformity, the Administrator shall, within 60 days after the completion of such hearing, order the manufacturer to provide prompt notification of such nonconformity in accordance with paragraph (a)(2) of this section. The manufacturer shall comply in all respects with the requirements of this subpart.

(2) Any notification required to be given by the manufacturer under paragraph (a)(1) of this section with respect to any class or category of engines shall be given to dealers, ultimate purchasers, and subsequent purchasers (if known) in such manner and containing such information as required in subparts I and M of this part.

(3)(i) Prior to an EPA ordered recall, the manufacturer may perform a voluntary emissions recall pursuant to regulations at § 90.804. Such manufacturer is subject to the reporting and recordkeeping requirements of § 90.805.

(ii) Once EPA determines that a substantial number of engines fail to conform with the requirements of section 213 of the Act or this part, the manufacturer will not have the option of a voluntary recall.

(b) The manufacturer bears all cost obligation a dealer incurs as a result of a requirement imposed by paragraph (a) of this section. The transfer of any such cost obligation from a manufacturer to a dealer through franchise or other agreement is prohibited.

(c) Any inspection of an engine for purposes of paragraph (a)(1) of this section, after its sale to the ultimate purchaser, is to be made only if the owner of such vehicle or engine voluntarily permits such inspection to be made, except as may be provided by any state or local inspection program.

[64 FR 15251, Mar. 30, 1999]

Subpart J—Exclusion and Exemption of Nonroad Engines from Regulations

§ 90.901 Applicability.

The requirements of subpart J are applicable to all nonroad engines and vehicles subject to the provisions of subpart A of part 90.

§ 90.902 Definitions.

The definitions in subpart A of this part apply to this subpart. The following definitions also apply to this subpart:

Exemption means exemption from the prohibitions of § 90.1003.

Export exemption means an exemption granted under § 90.1004(b) for the purpose of exporting new nonroad engines.

National security exemption means an exemption granted under § 90.1004(b) for the purpose of national security.

Manufacturer-owned nonroad engine means an uncertified nonroad engine

owned and controlled by a nonroad engine manufacturer and used in a manner not involving lease or sale by itself or in a vehicle employed from year to year in the ordinary course of business for product development, production method assessment, and market promotion purposes.

Testing exemption means an exemption granted under § 90.1004(b) for the purpose of research, investigations, studies, demonstrations or training, but not including national security.

§ 90.903 Exclusions, application of section 216 (10) and (11) of the Act.

(a) For the purpose of determining the applicability of section 216(10) of the Act, an internal combustion engine (including the fuel system) that is not used in a motor vehicle is deemed a nonroad engine, if it meets the definition in subpart A of this part. For the purpose of determining the applicability of section 216(11) of the Act, a vehicle powered by a nonroad engine is deemed a nonroad vehicle, if it meets the definition in subpart A of this part.

(b) EPA will maintain a list of models of nonroad engines and models of nonroad vehicles that have been determined to be excluded because they are used solely for competition. This list will be available to the public and may be obtained by writing to the following address: Group Manager, Engine Compliance Programs Group, Engine Programs and Compliance Division (6403J) Environmental Protection Agency, 1200 Pennsylvania Ave., NW., Washington, DC 20460.

(c) Upon written request with supporting documentation, EPA will make written determinations as to whether certain engines are or are not nonroad engines. Engines that are determined not to be nonroad engines are excluded from regulations under this part.

[61 FR 52102, Oct. 4, 1996]

§ 90.904 Who may request an exemption.

(a) Any person may request a testing exemption under § 90.905.

(b) Any nonroad engine manufacturer may request a national security exemption under § 90.908.

(c) For nonroad engine manufacturers, nonroad engines manufactured for export purposes are exempt without application, subject to the provisions of § 90.909.

(d) For eligible manufacturers, as determined by § 90.906, manufacturer-owned nonroad engines are exempt without application, subject to the provisions of § 90.906.

(e) For any person, display nonroad engines are exempt without application, subject to the provisions of § 90.907.

§ 90.905 Testing exemption.

(a) Any person requesting a testing exemption must demonstrate the following:

(1) That the proposed test program has a purpose which constitutes an appropriate basis for an exemption in accordance with § 90.1004(b), and in accordance with subsection (b) of this section;

(2) That the proposed test program necessitates the granting of an exemption, in accordance with subsection (c) of this section;

(3) That the proposed test program exhibits reasonableness in scope, in accordance with subsection (d) of this section; and

(4) That the proposed test program exhibits a degree of control consonant with the purpose of the program and EPA's monitoring requirements, in accordance with subsection (e) of this section.

(b) With respect to the purpose of the proposed test program, an appropriate purpose would be research, investigations, studies, demonstrations, or training, but not national security. A concise statement of purpose is a required item of information.

(c) With respect to the necessity that an exemption be granted, necessity arises from an inability to achieve the stated purpose in a practicable manner without performing or causing to be performed one or more of the prohibited acts under § 90.1003. In appropriate circumstances, time constraints may be a sufficient basis for necessity, but the cost of certification alone, in the absence of extraordinary circumstances, is not a basis for necessity.

(d) With respect to reasonableness, a test program must exhibit a duration

of reasonable length and affect a reasonable number of engines. In this regard, required items of information include:

(1) An estimate of the program's duration; and

(2) The maximum number of nonroad engines involved.

(e) With respect to control, the test program must incorporate procedures consistent with the purpose of the test and be capable of affording EPA monitoring capability. As a minimum, required items of information include:

(1) The technical nature of the test;

(2) The site of the test;

(3) The duration and accumulated engine operation associated with the test;

(4) The ownership arrangement with regard to the engines involved in the test;

(5) The intended final disposition of the engines;

(6) The manner in which the engines used in the test will be identified, and that identification recorded, and made available; and

(7) The means or procedure whereby test results will be recorded.

(f) A manufacturer of new nonroad engines may request a testing exemption to cover nonroad engines intended for use in test programs planned or anticipated over the course of a subsequent one-year period. Unless otherwise required by the Director, Engine Programs and Compliance Division, a manufacturer requesting such an exemption need only furnish the information required by paragraphs (a)(1) and (d)(2) of this section along with a description of the recordkeeping and control procedures that will be employed to assure that the engines are used for purposes consistent with § 90.1004(b).

[60 FR 34598, July 3, 1995, as amended at 64 FR 15252, Mar. 30, 1999]

§ 90.906 Manufacturer-owned exemption and precertification exemption.

(a) Any manufacturer owned nonroad engine, as defined by § 90.902, is exempt from § 90.1003, without application, if the manufacturer complies with the following terms and conditions:

(1) The manufacturer must establish, maintain, and retain the following adequately organized and indexed information on each exempted engine:

(i) Engine identification number;

(ii) Use of the engine on exempt status; and

(iii) Final disposition of any engine removed from exempt status.

(2) The manufacturer must provide right of entry and access to these records to EPA authorized representatives as required by § 90.506.

(3) Unless the requirement is waived or an alternative procedure is approved by the Director, Engine Programs and Compliance Division, the manufacturer must permanently affix a label to each nonroad engine on exempt status. This label should:

(i) Be affixed in a readily visible portion of the engine;

(ii) Be attached in such a manner that it cannot be removed without destruction or defacement;

(iii) State in the English language and in block letters and numerals of a color that contrasts with the background of the label, the following information:

(A) The label heading ''Emission Control Information;''

(B) Full corporate name and trademark of manufacturer;

(C) Engine displacement, engine family identification, and model year of engine; or person or office to be contacted for further information about the engine;

(D) The statement ''This nonroad engine is exempt from the prohibitions of 40 CFR 90.1003.''

(4) No provision of paragraph (a)(3) of this section prevents a manufacturer from including any other information it desires on the label.

[60 FR 34598, July 3, 1995, as amended at 64 FR 15252, Mar. 30, 1999]

§ 90.907 Display exemption.

Where an uncertified nonroad engine is a display engine to be used solely for display purposes, will only be operated incident and necessary to the display purpose, and will not be sold unless an applicable certificate of conformity has been received or the engine has been finally admitted pursuant to subpart G of this part, no request for exemption of the engine is necessary.

§ 90.908 National security exemption.

(a)(1) Any nonroad engine, otherwise subject to this part, which is used in a vehicle or equipment that exhibits substantial features ordinarily associated with military combat such as armor and/or permanently affixed weaponry and which will be owned and/or used by an agency of the federal government with responsibility for national defense, will be considered exempt from this part for purposes of national security. No request for exemption is necessary.

(2) Manufacturers may request a national security exemption for any nonroad engine, otherwise subject to this part, which does not meet the conditions described in paragraph (a)(1) of this section. A manufacturer requesting a national security exemption must state the purpose for which the exemption is required and the request must be endorsed by an agency of the federal government charged with responsibility for national defense.

(b) EPA will maintain a list of models of nonroad engines (and the vehicles or equipment which use them) that have been granted a national security exemption under paragraph (a)(2) of this section. This list will be available to the public and may be obtained by writing to the following address: Group Manager, Engine Compliance Programs Group, Engine Programs and Compliance Division (6403J) Environmental Protection Agency, 1200 Pennsylvania Ave., NW., Washington, DC 20460.

[61 FR 52102, Oct. 4, 1996]

§ 90.909 Export exemptions.

(a) A new nonroad engine intended solely for export, and so labeled or tagged on the outside of the container and on the engine itself, is subject to the provisions of § 90.1003, unless the importing country has new nonroad engine emission standards which differ from EPA standards.

(b) For the purpose of paragraph (a) of this section, a country having no standards, whatsoever, is deemed to be a country having emission standards which differ from EPA standards.

(c) EPA will maintain a list of foreign countries that have in force nonroad emission standards identical to U.S. EPA standards and have so notified EPA. This list may be obtained by writing to the following address: Group Manager, Engine Compliance Programs Group, Engine Programs and Compliance Division (6403–J), Environmental Protection Agency, Washington, DC 20460. New nonroad engines exported to such countries must comply with U.S. EPA certification regulations.

(d) It is a condition of any exemption for the purpose of export under § 90.1004(b) that such exemption be void ab initio with respect to a new nonroad engine intended solely for export if such nonroad engine is sold, or offered for sale, to an ultimate purchaser in the United States for purposes other than export.

[60 FR 34598, July 3, 1995, as amended at 64 FR 15252, Mar. 30, 1999]

§ 90.910 Granting of exemptions.

(a) If upon completion of the review of an exemption request made pursuant to § 90.905 or § 90.908, EPA determines it is appropriate to grant such an exemption, a memorandum of exemption is to be prepared and submitted to the person requesting the exemption. The memorandum is to set forth the basis for the exemption, its scope, and such terms and conditions as are deemed necessary. Such terms and conditions generally include, but are not limited to, agreements by the applicant to conduct the exempt activity in the manner described to EPA, create and maintain adequate records accessible to EPA at reasonable times, employ labels for the exempt engines setting forth the nature of the exemption, take appropriate measures to assure that the terms of the exemption are met, and advise EPA of the termination of the activity and the ultimate disposition of the engines.

(b) Any exemption granted pursuant to paragraph (a) of this section is deemed to cover any subject engine only to the extent that the specified terms and conditions are complied with. A breach of any term or condition causes the exemption to be void ab initio with respect to any engine. Consequently, the causing or the performing of an act prohibited under § 90.1003(a) (1) or (3), other than in

strict conformity with all terms and conditions of this exemption, renders the person to whom the exemption is granted, and any other person to whom the provisions of § 90.1003 are applicable, liable to suit under sections 204 and 205 of the Act.

§ 90.911 Submission of exemption requests.

Requests for exemption or further information concerning exemptions and/or the exemption request review procedure should be addressed to: Group Manager, Engine Compliance Programs Group, Engine Programs and Compliance Division (6403J), Environmental Protection Agency, Washington, DC 20460.

[64 FR 15252, Mar. 30, 1999]

§ 90.912 Treatment of confidential information.

The provisions for treatment of confidential information described in § 90.4 apply to this subpart.

§ 90.913 Exemption for engines certified to standards for large SI engines.

(a) An engine is exempt from the requirements of this part if it is in an engine family that has a valid certificate of conformity showing that it meets emission standards and other requirements under 40 CFR part 1048 for the appropriate model year.

(b) The only requirements or prohibitions from this part that apply to an engine that is exempt under this section are in this section.

(c) If your engines do not have the certificate required in paragraph (a) of this section, they will be subject to the provisions of this part. Introducing these engines into commerce without a valid exemption or certificate of conformity violates the prohibitions in § 90.1003.

(d) Engines exempted under this section are subject to all the requirements affecting engines under 40 CFR part 1048. The requirements and restrictions of 40 CFR part 1048 apply to anyone manufacturing these engines, anyone manufacturing equipment that uses these engines, and all other persons in the same manner as if these were nonroad spark-ignition engines above 19 kW.

(e) Engines exempted under this section may not generate or use emission credits under this part 90.

[70 FR 40450, July 13, 2005]

Subpart K—Prohibited Acts and General Enforcement Provisions

§ 90.1001 Applicability.

The requirements of subpart K are applicable to all nonroad engines and vehicles subject to the provisions of subpart A of part 90.

§ 90.1002 Definitions.

The definitions in subpart A of this part apply to this subpart. All terms not defined herein or in subpart A have the meaning given them in the Act.

§ 90.1003 Prohibited acts.

(a) The following acts and the causing thereof are prohibited:

(1)(i) In the case of a manufacturer of new nonroad engines or vehicles for distribution in commerce, the sale, the offering for sale, or the introduction, or delivery for introduction, into commerce, of any new nonroad engine manufactured after the applicable effective date under this part unless such engine is covered by a certificate of conformity issued (and in effect) under regulations found in this part.

(ii) In the case of any person, except as provided by regulation of the Administrator, the importation into the United States of any new nonroad engine manufactured after the applicable effective date under this part unless such engine is covered by a certificate of conformity issued (and in effect) under regulations found in this part.

(2) (i) For a person to fail or refuse to permit access to or copying of records or to fail to make reports or provide information required under § 90.1004.

(ii) For a person to fail or refuse to permit entry, testing or inspection authorized under §§ 90.126, 90.506, 90.705, 90.1004, or 90.1207.

(iii) For a person to fail or refuse to perform tests or to have tests performed as required under §§ 90.119, 90.504, 90.703, 90.1004, 90.1204.

(iv) For a person to fail to establish or maintain records as required under §§ 90.209, 90.704, 90.805, or 90.1004.

(v) For a person to fail to submit a remedial plan as required under § 90.808.

(3)(i) For a person to remove or render inoperative a device or element of design installed on or in a nonroad engine in compliance with regulations under this part prior to its sale and delivery to the ultimate purchaser, or for a person knowingly to remove or render inoperative such a device or element of design after the sale and delivery to the ultimate purchaser; or

(ii) For a person to manufacture, sell or offer to sell, or install, a part or component intended for use with, or as part of, a nonroad engine, where a principal effect of the part or component is to bypass, defeat, or render inoperative a device or element of design installed on or in a nonroad engine in compliance with regulations issued under this part, and where the person knows or should know that the part or component is being offered for sale or installed for this use or put to such use.

(4) For a manufacturer of a new nonroad engine subject to standards prescribed under this part:

(i) To sell, offer for sale, or introduce or deliver into commerce, a nonroad engine unless the manufacturer has complied with the requirements of § 90.1103.

(ii) To sell, offer for sale, or introduce or deliver into commerce, a nonroad engine unless a label or tag is affixed to the engine in accordance with regulations under this part.

(iii) To fail or refuse to comply with the requirements of § 90.808.

(iv) To provide directly or indirectly in any communication to the ultimate purchaser or a subsequent purchaser that the coverage of a warranty under the Act is conditioned upon use of a part, component, or system manufactured by the manufacturer or a person acting for the manufacturer or under its control, or conditioned upon service performed by such persons, except as provided in subpart L of this part.

(v) To fail or refuse to comply with the terms and conditions of the warranty under subpart L of this part.

(5) For a manufacturer of new nonroad vehicles to distribute in commerce, sell, offer for sale, or introduce into commerce, nonroad vehicles which contain an engine not covered by a certificate of conformity (except as specified in paragraph (b)(4) of this section) or which contain a handheld engine in a nonhandheld vehicle.

(6) For a person to circumvent or attempt to circumvent the residence time requirements of Paragraph (a)(2)(iii) of this Section of the nonroad engine definition in § 90.3.

(b) For the purposes of enforcement of this part, the following apply:

(1) Nothing in paragraph (a) of this section is to be construed to require the use of manufacturer parts in maintaining or repairing a nonroad engine.

(2) Actions for the purpose of repair or replacement of a device or element of design or any other item are not considered prohibited acts under § 90.1003(a) if the actions are a necessary and temporary procedure, the device or element is replaced upon completion of the procedure, and the action results in the proper functioning of the device or element of design.

(3) The following provisions apply for converting nonroad engines to use alternative fuels:

(i) Until December 31, 2009, converting an engine to use a clean alternative fuel (as defined in Title II of the Act) is not considered a prohibited act under paragraph (a) of this section if the engine complies with the applicable standard when operating on the alternative fuel. Also, in the case of engines converted to dual fuel or flexible use, the action must result in the proper functioning of the nonroad engine when it operates on conventional fuel.

(ii) The provisions of 40 CFR 1054.645 apply starting January 1, 2010.

(4) Certified nonroad engines shall be used in all equipment or vehicles that are self-propelled, portable, transportable, or are intended to be propelled while performing their function, unless the manufacturer of the equipment or vehicle can prove that the vehicle or equipment will be used in a manner consistent with paragraph (2) of the definition of *Nonroad engine* in § 90.3. Nonroad vehicle and equipment manufacturers may continue to use noncertified nonroad engines built prior to the applicable implementation date of

the Phase 1 rule until noncertified engine inventories are depleted; further after the applicable implementation of the Phase 2 regulations in this part, nonroad vehicle and equipment manufacturers may continue to use Phase 1 engines until Phase 1 engine inventories are depleted. Stockpiling (i.e., build up of an inventory of uncertified engines or Phase 1 engines beyond normal business practices to avoid or delay compliance with the Phase 1 or Phase 2 regulations in this part, respectively) will be considered a violation of this section.

(5) A new nonroad engine, intended solely to replace an engine in a piece of nonroad equipment that was originally produced with an engine manufactured prior to the applicable implementation date as described in §§90.2, 90.103 and 90.106, or with an engine that was originally produced in a model year in which less stringent standards under this part were in effect, shall not be subject to the requirements of §90.106 or prohibitions and provisions of paragraphs (a)(1) and (b)(4) of this section provided that:

(i) The engine manufacturer has ascertained that no engine produced by itself or the manufacturer of the engine that is being replaced, if different, and certified to the requirements of this subpart, is available with the appropriate physical or performance characteristics to repower the equipment; and

(ii) The engine manufacturer or its agent takes ownership and possession of the old engine in partial exchange for the replacement engine; and

(iii) The replacement engine is clearly labeled with the following language, or similar alternate language approved in advance by the Administrator:

THIS ENGINE DOES NOT COMPLY WITH FEDERAL NONROAD OR ON-HIGHWAY EMISSION REQUIREMENTS. SALE OR INSTALLATION OF THIS ENGINE FOR ANY PURPOSE OTHER THAN AS A REPLACEMENT ENGINE IN A NONROAD VEHICLE OR PIECE OF NONROAD EQUIPMENT WHOSE ORIGINAL ENGINE WAS NOT CERTIFIED, OR WAS CERTIFIED TO LESS STRINGENT EMISSION STANDARDS THAN THOSE THAT APPLY TO THE YEAR OF MANUFACTURE OF THIS ENGINE, IS A VIOLATION OF FEDERAL LAW SUBJECT TO CIVIL PENALTY;

and

(iv) Where the replacement engine is intended to replace an engine built after the applicable implementation date of regulations under this part, but built to less stringent emission standards than are currently applicable, the replacement engine shall be identical in all material respects to a certified configuration of the same or later model year as the engine being replaced.

(v) In cases where an engine is to be imported for replacement purposes under the provisions of this paragraph (b)(5), the term ''engine manufacturer'' shall not apply to an individual or other entity that does not possess a current Certificate of Conformity issued by EPA under this part.

(6)(i) Regulations elsewhere in this part notwithstanding, for three model years after the phase-in of each set of Class I through Class V Phase 2 standards; i.e. up to and including August 1, 2010 for Class I engines, up to and including model year 2008 for Class II engines, up to and including model year 2008 for Class III and Class IV engines, and up to and including model year 2010 for Class V engines, small volume equipment manufacturers as defined in this part, may continue to use, and engine manufacturers may continue to supply, engines certified to Phase 1 standards (or identified and labeled by their manufacturer to be identical to engines previously certified under Phase 1 standards), provided the equipment manufacturer has demonstrated to the satisfaction of the Administrator that no certified Phase 2 engine is available with suitable physical or performance characteristics to power a piece of equipment in production prior to the initial effective date of Phase 2 standards, as indicated in §90.103(a). The equipment manufacturer must also certify to the Administrator that the equipment model has not undergone any redesign which could have facilitated conversion of the equipment to accommodate a Phase 2 engine. These provisions do not apply to Class I-A and Class I-B engines.

(ii) Regulations elsewhere in this part notwithstanding, for the duration of the Phase 2 rule in this part, equipment manufacturers that produce

small volume equipment models, as defined in this part, for a Class I model in production prior to August 1, 2007, or a Class II model in production prior to the 2001 model year, or a Class III or Class IV model in production prior to the 2002 model year, or a Class V model in production prior to the 2004 model year, may continue to use in that small volume equipment model, and engine manufacturers may continue to supply, engines certified to Phase 1 requirements (or identified and labeled by their manufacturer to be identical to engines previously certified under Phase 1 standards). To be eligible for this provision, the equipment manufacturer must have demonstrated to the satisfaction of the Administrator that no certified Phase 2 engine is available with suitable physical or performance characteristics to power the small volume equipment model. The equipment manufacturer must also certify to the Administrator that the equipment model has not undergone any redesign which could have facilitated conversion of the equipment to accommodate a Phase 2 engine. These provisions do not apply to Class I-A and Class I-B engines.

(iii) An equipment manufacturer which is unable to obtain suitable Phase 2 engines and which can not obtain relief under any other provision of this part, may, prior to the date on which the manufacturer would become in noncompliance with the requirement to use Phase 2 engines, apply to the Administrator to be allowed to continue using Phase 1 engines, through August 1, 2008 for Class I engines, through the 2006 model year for Class II engines, through the 2006 model year for Class III and Class IV engines, and through the 2008 model year for Class V engines, subject to the following criteria (These provisions do not apply to Class I-A and Class I-B engines.):

(A) The inability to obtain Phase 2 engines is despite the manufacturer's best efforts and is the result of an extraordinary action on the part of the engine manufacturer that was outside the control of and could not be reasonably foreseen by the equipment manufacturer; such as canceled production or shipment, last minute certification failure, unforeseen engine cancellation, plant closing, work stoppage or other such circumstance; and

(B) the inability to market the particular equipment will bring substantial economic hardship to the equipment manufacturer resulting in a major impact on the equipment manufacturer's solvency.

(iv) The written permission from the Administrator to the equipment manufacturer shall serve as permission for the engine manufacturer to provide such Phase 1 engines required by the equipment manufacturers under this paragraph (b)(6) of this section. As Phase 1 engines, these engines are exempt from Production Line Testing requirements under subpart H of this part and in-use testing provisions under subpart M of this part, and are excluded from the certification averaging, banking and trading program of subpart C of this part.

(7) Actions for the purpose of installing or removing altitude kits and performing other changes to compensate for altitude change as described in the application for certification pursuant to § 90.107(d) and approved at the time of certification pursuant to § 90.108(a) are not considered prohibited acts under paragraph (a) of this section.

[60 FR 34598, July 3, 1995, as amended at 62 FR 42644, Aug. 7, 1997; 64 FR 15252, Mar. 30, 1999; 65 FR 24313, Apr. 25, 2000; 73 FR 59182, Oct. 8, 2008]

§ 90.1004 General enforcement provisions.

(a) *Information collection provisions.* (1) Every manufacturer of new nonroad engines and other persons subject to the requirements of this part must establish and maintain records, perform tests where such testing is not otherwise reasonably available under this part, make reports and provide information the Administrator may reasonably require to determine whether the manufacturer or other person has acted or is acting in compliance with this part or to otherwise carry out the provisions of this part, and must, upon request of an officer or employee duly designated by the Administrator, permit the officer or employee at reasonable times to have access to and copy such records. The manufacturer shall

comply in all respects with the requirements of subpart I of this part.

(2) For purposes of enforcement of this part, an officer or employee duly designated by the Administrator, upon presenting appropriate credentials, is authorized:

(i) To enter, at reasonable times, any establishment of the manufacturer, or of any person whom the manufacturer engaged to perform any activity required under paragraph (a)(1) of this section, for the purposes of inspecting or observing any activity conducted pursuant to paragraph (a)(1) of this section; and

(ii) To inspect records, files, papers, processes, controls, and facilities used in performing an activity required by paragraph (a)(1) of this section, by the manufacturer or by a person whom the manufacturer engaged to perform the activity.

(b) *Exemption provision*. The Administrator may exempt a new nonroad engine from §90.1003 upon such terms and conditions as the Administrator may find necessary for the purpose of export, research, investigations, studies, demonstrations, or training, or for reasons of national security.

(c) *Importation provision*. (1) A new nonroad engine or vehicle offered for importation or imported by a person in violation of §90.1003 is to be refused admission into the United States, but the Secretary of the Treasury and the Administrator may, by joint regulation, provide for deferring a final determination as to admission and authorizing the delivery of such a nonroad engine offered for import to the owner or consignee thereof upon such terms and conditions (including the furnishing of a bond) as may appear to them appropriate to insure that the nonroad engine will be brought into conformity with the standards, requirements, and limitations applicable to it under this part.

(2) If a nonroad engine is finally refused admission under this paragraph, the Secretary of the Treasury shall cause disposition thereof in accordance with the customs laws unless it is exported, under regulations prescribed by the Secretary, within 90 days of the date of notice of the refusal or additional time as may be permitted pursuant to the regulations.

(3) Disposition in accordance with the customs laws may not be made in such manner as may result, directly or indirectly, in the sale, to the ultimate purchaser, of a new nonroad engine that fails to comply with applicable standards of the Administrator under this part.

(d) *Export provision*. A new nonroad engine intended solely for export, and so labeled or tagged on the outside of the container and on the engine itself, shall be subject to the provisions of §90.1003, except that if the country that is to receive the engine has emission standards that differ from the standards prescribed under subpart B of this part, then the engine must comply with the standards of the country that is to receive the engine.

§90.1005 Injunction proceedings for prohibited acts.

(a) The district courts of the United States have jurisdiction to restrain violations of §90.1003.

(b) Actions to restrain such violations must be brought by and in the name of the United States. In an action, subpoenas for witnesses who are required to attend a district court in any district may run into any other district.

§90.1006 Penalties.

(a) *Violations*. A violation of the requirements of this subpart is a violation of the applicable provisions of the Act and is subject to the penalty provisions thereunder.

(1) A person who violates §90.1003(a)(1), (a)(4), or (a)(5), or a manufacturer or dealer who violates §90.1003(a)(3)(i), is subject to a civil penalty of not more than $32,500 for each violation.

(2) A person other than a manufacturer or dealer who violates §90.1003(a)(3)(i) or any person who violates §90.1003(a)(3)(ii) is subject to a civil penalty of not more than $2,750 for each violation.

(3) A violation with respect to §90.1003(a)(1), (a)(3)(i), (a)(4), or (a)(5) constitutes a separate offense with respect to each nonroad engine.

(4) A violation with respect to § 90.1003(a)(3)(ii) constitutes a separate offense with respect to each part or component. Each day of a violation with respect to § 90.1003(a)(6) constitutes a separate offense.

(5) A person who violates § 90.1003(a)(2) or (a)(6) is subject to a civil penalty of not more than $32,500 per day of violation.

(6) The maximum penalty values listed in this section are shown for calendar year 2004. Maximum penalty limits for later years may be adjusted based on the Consumer Price Index. The specific regulatory provisions for changing the maximum penalties, published in 40 CFR part 19, reference the applicable U.S. Code citation on which the prohibited action is based.

(b) *Civil actions.* The Administrator may commence a civil action to assess and recover any civil penalty under paragraph (a) of this section.

(1) An action under this paragraph may be brought in the district court of the United States for the district in which the violation is alleged to have occurred, the defendant resides, or the Administrator's principal place of business is located, and in which the court has jurisdiction to assess a civil penalty.

(2) In determining the amount of a civil penalty to be assessed under this paragraph, the court is to take into account the gravity of the violation, the economic benefit or savings (if any) resulting from the violation, the size of the violator's business, the violator's history of compliance with Title II of the Act, action taken to remedy the violation, the effect of the penalty on the violator's ability to continue in business, and such other matters as justice may require.

(3) In any such action, subpoenas for witnesses who are required to attend a district court in any district may run into any other district.

(c) *Administrative assessment of certain penalties.* (1) Administrative penalty authority. In lieu of commencing a civil action under paragraph (b) of this section, the Administrator shall assess any civil penalty prescribed in paragraph (a) of this section, except that the maximum amount of penalty sought against each violator in a penalty assessment proceeding can not exceed $270,000, unless the Administrator and the Attorney General jointly determine that a matter involving a larger penalty amount is appropriate for administrative penalty assessment. Any such determination by the Administrator and the Attorney General is not subject to judicial review. Assessment of a civil penalty is made by an order made on the record after opportunity for a hearing held in accordance with the procedures found at part 22 of this chapter. The Administrator may compromise, or remit, with or without conditions, any administrative penalty which may be imposed under this section.

(2) *Determining amount.* In determining the amount of any civil penalty assessed under this subsection, the Administrator is to take into account the gravity of the violation, the economic benefit or savings (if any) resulting from the violation, the size of the violator's business, the violator's history of compliance with Title II of the Act, action taken to remedy the violation, the effect of the penalty on the violator's ability to continue in business, and such other matters as justice may require.

(3) *Effect of administrator's action.* (i) Action by the Administrator under this paragraph does not affect or limit the Administrator's authority to enforce any provisions of this part; except that any violation with respect to which the Administrator has commenced and is diligently prosecuting an action under this part, or for which the Administrator has issued a final order not subject to further judicial review and for which the violator has paid a penalty assessment under this part may not be the subject of a civil penalty action under paragraph (b) of this section.

(ii) No action by the Administrator under this part affects a person's obligation to comply with a section of this part.

(4) *Finality of order.* An order issued under this part becomes final 30 days after its issuance unless a petition for judicial review is filed under paragraph (c)(5) of this section.

(5) *Judicial review.* (i) A person against whom a civil penalty is assessed in accordance with this part

may seek review of the assessment in the United States District Court for the District of Columbia or for the district in which the violation is alleged to have occurred, in which such person resides, or where the person's principle place of business is located, within the 30-day period beginning on the date a civil penalty order is issued. The person must simultaneously send a copy of the filing by certified mail to the Administrator and the Attorney General.

(ii) The Administrator must file in the court within 30 days a certified copy, or certified index, as appropriate, of the record on which the order was issued. The court is not to set aside or remand any order issued in accordance with the requirements of this paragraph unless substantial evidence does not exist in the record, taken as a whole, to support the finding of a violation or unless the Administrator's assessment of the penalty constitutes an abuse of discretion, and the court is not to impose additional civil penalties unless the Administrator's assessment of the penalty constitutes an abuse of discretion. In any proceedings, the United States may seek to recover civil penalties assessed under this section.

(6) *Collection.* (i) If any person fails to pay an assessment of a civil penalty imposed by the Administrator as provided in this part after the order making the assessment has become final or after a court in an action brought under paragraph (c)(5) of this section has entered a final judgment in favor of the Administrator, the Administrator is to request that the Attorney General bring a civil action in an appropriate district court to recover the amount assessed (plus interest at rates established pursuant to section 6621(a)(2) of the Internal Revenue Code of 1986 from the date of the final order or the date of final judgment, as the case may be). In such an action, the validity, amount, and appropriateness of the penalty are not subject to review.

(ii) A person who fails to pay on a timely basis the amount of an assessment of a civil penalty as described in paragraph (c)(6)(i) of this section is required to pay, in addition to that amount and interest, the United States' enforcement expenses, including attorney's fees and costs for collection proceedings, and a quarterly nonpayment penalty for each quarter during which the failure to pay persists. The nonpayment penalty is an amount equal to 10 percent of the aggregate amount of that person's penalties and nonpayment penalties which are unpaid as of the beginning of such quarter.

[60 FR 34598, July 3, 1995, as amended at 70 FR 40450, July 13, 2005]

§90.1007 Bonding requirements related to compliance, enforcement, and warranty assurance.

The bonding provisions of 40 CFR 1054.120(f)(4) and 1054.690 apply for all 2010 and later model year engines starting January 1, 2010. These provisions include measures to ensure that certifying manufacturers are able to cover any potential compliance or enforcement actions under the Clean Air Act and to meet their warranty obligations.

[73 FR 59182, Oct. 8, 2008]

Subpart L—Emission Warranty and Maintenance Instructions

§90.1101 Applicability.

The requirements of subpart L are applicable to all nonroad engines and vehicles subject to the provisions of subpart A of part 90.

§90.1102 Definitions.

The definitions of subpart A of this part apply to this subpart.

§90.1103 Emission warranty, warranty period.

(a) Warranties imposed by this subpart shall be for the first two years of engine use from the date of sale to the ultimate purchaser. Manufacturers of handheld engines subject to Phase 2 standards may apply to the Administrator for approval for a warranty period of less than two years for handheld engines that are subject to severe service in seasonal equipment and are likely to run their full useful life hours in less than two years. Such an application must be made prior to certification. Alternatively, manufacturers of handheld engines subject to Phase 2

standards may apply to the Administrator for approval for a warranty period equal to the useful life of the engine or two years, whichever is less, if the equipment in which the engine is placed is equipped with a meter for measuring hours of use. Such an application must be made prior to certification.

(b) The manufacturer of each new nonroad engine must warrant to the ultimate purchaser and each subsequent purchaser that the engine is designed, built and equipped so as to conform at the time of sale with applicable regulations under section 213 of the Act, and the engine is free from defects in materials and workmanship which cause such engine to fail to conform with applicable regulations for its warranty period.

(c) In the case of a nonroad engine part, the manufacturer or rebuilder of the part may certify according to § 85.2112 of this chapter that use of the part will not result in a failure of the engine to comply with emission standards promulgated in this part.

(d) For the purposes of this section, the owner of any nonroad engine warranted under this part is responsible for the proper maintenance of the engine as stated in the manufacturer's written instructions. Proper maintenance generally includes replacement and service, at the owner's expense at a service establishment or facility of the owner's choosing, such items as spark plugs, points, condensers, and any other part, item, or device related to emission control (but not designed for emission control) under the terms of the last sentence of section 207(a)(3) of the Act, unless such part, item, or device is covered by any warranty not mandated by this Act.

(e) Starting with the 2010 model year, you must meet the conditions specified in 40 CFR 1054.120(f) to ensure that owners will be able to promptly obtain warranty repairs.

Describe in your application for certification how you will meet these conditions.

[60 FR 34598, July 3, 1995, as amended at 64 FR 15253, Mar. 30, 1999; 65 FR 24314, Apr. 25, 2000; 73 FR 59182, Oct. 8, 2008]

§ 90.1104 Furnishing of maintenance instructions to ultimate purchaser.

(a) The manufacturer must furnish or cause to be furnished to the ultimate purchaser of each new nonroad engine written instructions for the maintenance needed to assure proper functioning of the emission control system.

(b) The manufacturer must provide in boldface type on the first page of the written maintenance instructions notice that maintenance, replacement, or repair of the emission control devices and systems may be performed by any nonroad engine repair establishment or individual.

(c) The instructions under paragraph (b) of this section will not include any condition on the ultimate purchaser's using, in connection with such engine, any component or service (other than a component or service provided without charge under the terms of the purchase agreement) which is identified by brand, trade, or corporate name. Such instructions also will not directly or indirectly distinguish between service performed by the franchised dealers of such manufacturer or any other service establishments with which such manufacturer has a commercial relationship and service performed by independent nonroad engine repair facilities with which such manufacturer has no commercial relationship.

(d) The prohibition of paragraph (c) of this section may be waived by the Administrator if:

(1) The manufacturer satisfies the Administrator that the engine will function properly only if the component or service so identified is used in connection with such engine; and

(2) The Administrator finds that such a waiver is in the public interest.

(e) If a manufacturer includes in an advertisement a statement respecting the cost or value of emission control devices or systems, the manufacturer shall set forth in the statement the cost or value attributed to these devices or systems by the Secretary of Labor (through the Bureau of Labor Statistics). The Secretary of Labor, and his or her representatives, has the same access for this purpose to the books, documents, papers, and records of a manufacturer as the Comptroller General has to those of a recipient of

assistance for purposes of section 311 of the Act.

[60 FR 34598, July 3, 1995, as amended at 64 FR 15253, Mar. 30, 1999]

Subpart M—Voluntary In-Use Testing

SOURCE: 64 FR 15254, Mar. 30, 1999, unless otherwise noted.

§ 90.1201 Applicability.

The provisions of this subpart from § 90.1201 through § 90.1249 are applicable to all handheld and nonhandheld Phase 2 engines subject to the provisions of subpart A of this part.

[64 FR 15254, Mar. 30, 1999, as amended at 65 FR 24314, Apr. 25, 2000]

§ 90.1202 Definitions.

For the purposes of this subpart, except as otherwise provided, the definitions in subparts A and C of this part apply to this subpart.

§ 90.1203 Voluntary Manufacturer In-Use Testing Program.

(a) Manufacturers may elect to participate in the voluntary in-use testing program by notifying the Administrator in writing of their intent to conduct emissions testing on in-use engines prior to the beginning of each model year. The notification must include a list of engine families the manufacturer has selected to include in the testing program.

(b) Each engine family included in the voluntary in-use testing program is exempted from the Production Line Testing requirements according to § 90.701(c) for two model years, the current model year and the subsequent model year. Manufacturers may only include up to twenty percent of their eligible engine families in this in-use testing program each model year.

(c) The manufacturer must randomly select or procure a minimum of three engines, from each family included in the voluntary program, for emissions testing. These three engines may be selected or procured from:

(1) Existing consumer or independently owned fleets,

(2) Existing manufacturer owned fleets, or

(3) The production line and placed into either manufacturer or consumer owned fleets. Although a minimum of three engines must be emissions tested from each engine family in this testing program, a manufacturer may elect to emissions test more than three engines per family.

(d) The manufacturer or the manufacturer's designee must:

(1) Age the selected engines in equipment representing the top 50 percent, by production, of available equipment for the engine family.

(2) Age the selected engines to at least 75 percent of each engines' useful life as determined pursuant to § 90.105.

(3) Age the engine/equipment combination in actual field conditions encountered with typical use of the equipment as described in the owner's manual or other literature sold with the equipment or engine.

(e) Documents obtained in the procurement or aging process must be maintained as required in § 90.121.

(f) The manufacturer must complete testing within three calendar years from the time they notified the Administrator of their intent to participate in the voluntary in-use testing program, unless otherwise approved by the Administrator; the Administrator will give such approval upon acceptance of documentation demonstrating that appropriate in-use testing will take a longer period of time.

§ 90.1204 Maintenance, aging and testing of engines.

(a) Prior to aging the engines and after appropriate stabilization, manufacturers may optionally conduct emissions testing on the engines, according to the test procedures described in subpart E of this part. These tests to serve as baseline references.

(b) Manufacturers must obtain information regarding the accumulated usage, maintenance, operating conditions, and storage of the test engines.

(1) The manufacturer may take reasonable measures to assure that the engines and equipment were properly used and maintained during the field aging process, but additional maintenance to that indicated in the owners manual or other literature sold with the equipment or engine is prohibited.

(2) Unless otherwise approved by the Administrator, once a manufacturer begins aging and/or testing an engine, the manufacturer may not remove that engine from the selected sample unless that engine experiences catastrophic mechanical failure or safety concerns requiring major engine repair.

(c) The manufacturer may perform minimal set-to-spec maintenance on components of a test engine that are not subject to parameter adjustment. Components subject to parameter adjustment must be sealed and tamperproof and may not be adjusted for testing. Unless otherwise approved by the Administrator, maintenance to any test engine may include only that which is listed in the owner's instructions for engines with the amount of service and age of the test engine.

(d) After aging each engine to at least 75 percent of the engine's useful life as determined pursuant to § 90.105, at least one valid emission test, according to the test procedure outlined in subpart E of this part, is required for each test engine. Data from other emission testing or performance testing performed on a test engine must be supplied to EPA, and may not be used for the purpose of determining the need for maintenance on an engine.

(e) Documents obtained in the procurement, aging, maintenance, or testing process must be maintained as required in § 90.121.

§ 90.1205 In-use test program reporting requirements.

(a) The manufacturer shall submit to the Administrator within ninety (90) days of completion of testing for a given model year's engines, all emission testing results generated from the voluntary in-use testing program. The following information must be reported for each test engine:

(1) Engine family;

(2) Model;

(3) Application;

(4) Engine serial number;

(5) Date of manufacture;

(6) Hours of use;

(7) Date and time of each test attempt;

(8) Results (if any) of each test attempt;

(9) Schedules, descriptions and justifications of all maintenance and/or adjustments performed;

(10) Schedules, descriptions and justifications of all modifications and/or repairs; and

(11) A listing of any test engines that were deleted from the aging process or testing process and technical justifications to support the deletion.

(b) All testing reports and requests for approvals made under this subpart shall be addressed to: Manager, Engine Compliance Programs Group (6403–J), U.S. Environmental Protection Agency, Washington, DC 20460.

§ 90.1206 [Reserved]

§ 90.1207 Entry and access.

(a) To allow the Administrator to determine whether a manufacturer is complying with the provisions under this subpart, EPA enforcement officers or their authorized representatives, upon presentation of credentials, shall be permitted entry, during operating hours, into any of the following places:

(1) Any facility where engines undergo or are undergoing aging, maintenance, repair, preparation for aging, selection for aging or emission testing.

(2) Any facility where records or documents related to any of activities described in paragraph (a)(1) of this section are kept.

(3) Any facility where any engine that is being tested or aged, was tested or aged or will be tested or aged is present.

(b) Upon admission to any facility referred to in paragraph (a) of this section, EPA enforcement officers or EPA authorized representatives are authorized to perform those activities set forth in § 90.705 (b) and also to inspect and make copies of records related to engine aging (service accumulation) and maintenance.

(c) The provisions of § 90.705(c), (d), (e), (f) and (g) also apply to entry and access under this subpart.

§§ 90.1208–90.1249 [Reserved]

PART 91—CONTROL OF EMISSIONS FROM MARINE SPARK-IGNITION ENGINES

Subpart A—General

Sec.
91.1 Applicability.
91.2 Applicable date.
91.3 Definitions.
91.4 Acronyms and abbreviations.
91.5 Table and figure numbering; position.
91.6 Reference materials.
91.7 Treatment of confidential information.

Subpart B—Emission Standards and Certification Provisions

91.101 Applicability.
91.102 Definitions.
91.103 Averaging, banking, and trading of exhaust emission credits.
91.104 Exhaust emission standards for outboard and personal watercraft engines.
91.105 Useful life period, recall, and warranty periods.
91.106 Certificate of conformity.
91.107 Application for certification.
91.108 Certification.
91.109 Requirement of certification—closed crankcase.
91.110 Requirement of certification—prohibited controls.
91.111 Requirement of certification—prohibition of defeat devices.
91.112 Requirement of certification—adjustable parameters.
91.113 Requirement of certification—emission control information label and engine identification number.
91.114 Requirement of certification—supplying production engines upon request.
91.115 Certification procedure—determining engine power and engine families.
91.116 Certification procedure—test engine selection.
91.117 Certification procedure—service accumulation.
91.118 Certification procedure—testing.
91.119 Certification procedure—use of special test procedures.
91.120 Compliance with Family Emission Limits over useful life.
91.121 Certification procedure—recordkeeping.
91.122 Amending the application and certificate of conformity.
91.123 Denial, revocation of certificate of conformity.
91.124 Request for hearing.
91.125 Hearing procedures.
91.126 Right of entry and access.

Subpart C—Averaging, Banking, and Trading Provisions

91.201 Applicability.
91.202 Definitions.
91.203 General provisions.
91.204 Averaging.
91.205 Banking.
91.206 Trading.
91.207 Credit calculation and manufacturer compliance with emission standards.
91.208 Certification.
91.209 Maintenance of records.
91.210 End-of-year and final reports.
91.211 Notice of opportunity for hearing.

Subpart D—Emission Test Equipment Provisions

91.301 Scope; applicability.
91.302 Definitions.
91.303 Acronyms and abbreviations.
91.304 Test equipment overview.
91.305 Dynamometer specifications and calibration accuracy.
91.306 Dynamometer torque cell calibration.
91.307 Engine cooling system.
91.308 Lubricating oil and test fuel.
91.309 Engine intake air temperature measurement.
91.310 Engine intake air humidity measurement.
91.311 Test conditions.
91.312 Analytical gases.
91.313 Analyzers required.
91.314 Analyzer accuracy and specifications.
91.315 Analyzer initial calibration.
91.316 Hydrocarbon analyzer calibration.
91.317 Carbon monoxide analyzer calibration.
91.318 Oxides of nitrogen analyzer calibration.
91.319 NO_X converter check.
91.320 Carbon dioxide analyzer calibration.
91.321 NDIR analyzer calibration.
91.322 Calibration of other equipment.
91.323 Analyzer bench checks.
91.324 Analyzer leakage check.
91.325 Analyzer interference checks.
91.326 Pre- and post-test analyzer calibration.
91.327 Sampling system requirements.
91.328 Measurement equipment accuracy/calibration frequency table.
91.329 Catalyst thermal stress test.
APPENDIX A TO SUBPART D OF PART 91—FIGURES
APPENDIX B TO SUBPART D OF PART 91—FIGURES

Subpart E—Gaseous Exhaust Test Procedures

91.401 Scope; applicability.
91.402 Definitions.
91.403 Symbols and abbreviations.
91.404 Test procedure overview.

91.405 Recorded information.
91.406 Engine parameters to be measured and recorded.
91.407 Engine inlet and exhaust systems.
91.408 Pre-test procedures.
91.409 Engine dynamometer test run.
91.410 Engine test cycle.
91.411 Post-test analyzer procedures.
91.412 Data logging.
91.413 Exhaust sample procedure—gaseous components.
91.414 Raw gaseous exhaust sampling and analytical system description.
91.415 Raw gaseous sampling procedures.
91.416 Intake air flow measurement specifications.
91.417 Fuel flow measurement specifications.
91.418 Data evaluation for gaseous emissions.
91.419 Raw emission sampling calculations.
91.420 CVS concept of exhaust gas sampling system.
91.421 Dilute gaseous exhaust sampling and analytical system description.
91.423 Exhaust gas analytical system; CVS grab sample.
91.424 Dilute sampling procedure—CVS calibration.
91.425 CVS calibration frequency.
91.426 Dilute emission sampling calculations.
91.427 Catalyst thermal stress resistance evaluation.
APPENDIX A TO SUBPART E OF PART 91—TABLES
APPENDIX B TO SUBPART E OF PART 91—FIGURES

Subpart F—Manufacturer Production Line Testing Program

91.501 Applicability.
91.502 Definitions.
91.503 Production line testing by the manufacturer.
91.504 Maintenance of records; submittal of information.
91.505 Right of entry and access.
91.506 Engine sample selection.
91.507 Test procedures.
91.508 Cumulative Sum (CumSum) procedure.
91.509 Calculation and reporting of test results.
91.510 Compliance with criteria for production line testing.
91.511 Suspension and revocation of certificates of conformity.
91.512 Request for public hearing.
91.513 Administrative procedures for public hearing.
91.514 Hearing procedures.
91.515 Appeal of hearing decision.
91.516 Treatment of confidential information.

Subpart G—Selective Enforcement Auditing Regulations

91.601 Applicability.
91.602 Definitions.
91.603 Applicability of part 91, subpart F.
91.604 Test orders.
91.605 Testing by the Administrator.
91.606 Sample selection.
91.607 Test procedures.
91.608 Compliance with acceptable quality level and passing and failing criteria for selective enforcement audits.
APPENDIX A TO SUBPART G OF PART 91—SAMPLING PLANS FOR SELECTIVE ENFORCEMENT AUDITING OF MARINE ENGINES

Subpart H—Importation of Nonconforming Marine Engines

91.701 Applicability.
91.702 Definitions.
91.703 Admission.
91.704 Exemptions and exclusions.
91.705 Prohibited acts; penalties.
91.706 Treatment of confidential information.

Subpart I—In-Use Testing and Recall Regulations

91.801 Applicability.
91.802 Definitions.
91.803 Manufacturer in-use testing program.
91.804 Maintenance, procurement and testing of in-use engines.
91.805 In-use test program reporting requirements.
91.806 Voluntary emissions recall.

Subpart J—Emission-Related Defect Reporting Requirements, Voluntary Emission Recall Program

91.901 Applicability.
91.902 Definitions.
91.903 Applicability to part 85, subpart T.
91.904 Voluntary emission recall.
91.905 Reports, voluntary recall plan filing, record retention.
91.906 Responsibility under other legal provisions preserved.
91.907 Disclaimer of production warranty applicability.

Subpart K—Exclusion and Exemption of Marine SI Engines

91.1001 Applicability.
91.1002 Definitions.
91.1003 Exclusions based on section 216(10) of the Act.
91.1004 Who may request an exemption.
91.1005 Testing exemption.
91.1006 Manufacturer-owned exemption and precertification exemption.
91.1007 Display exemption.

91.1008 National security exemption.
91.1009 Export exemptions.
91.1010 Granting of exemptions.
91.1011 Submission of exemption requests.
91.1012 Treatment of confidential information.
91.1013 Exemption for certified Small SI engines.

Subpart L—Prohibited Acts and General Enforcement Provisions

91.1101 Applicability.
91.1102 Definitions.
91.1103 Prohibited acts.
91.1104 General enforcement provisions.
91.1105 Injunction proceedings for prohibited acts.
91.1106 Penalties.
91.1107 Warranty provisions.
91.1108 In-use compliance provisions.

Subpart M—Emission Warranty and Maintenance Instructions

91.1201 Applicability.
91.1202 Definitions.
91.1203 Emission warranty, warranty period.
91.1204 Furnishing of maintenance and use instructions to ultimate purchaser.

Subpart N—In-Use Credit Program for New Marine Engines

91.1301 Applicability.
91.1302 Definitions.
91.1303 General provisions.
91.1304 Averaging.
91.1305 Banking.
91.1306 Trading.
91.1307 Credit calculation.
91.1308 Maintenance of records.
91.1309 Reporting requirements.
91.1310 Notice of opportunity for hearing.

AUTHORITY: 42 U.S.C. 7401–7671q.

SOURCE: 61 FR 52102, Oct. 4, 1996, unless otherwise noted.

EFFECTIVE DATE NOTE: At 61 FR 52102, Oct. 4, 1996, part 91 was added, effective Dec. 3, 1996. This part contains information collection and recordkeeping requirements that will not become effective until approval has been given by the Office of Management and Budget.

Subpart A—General

§91.1 Applicability.

(a) This part and all its subparts apply to marine spark-ignition engines used to propel marine vessels as defined in the General Provisions of the United States Code, 1 U.S.C.3 (1992), unless otherwise indicated.

(b) Sterndrive and inboard engines are exempt from this part.

(c) Existing technology OB/PWC are exempt from §91.112 and subparts D, E, F, G, I (§§91.803 through 91.805), J, M and N through model year 2003.

(d) This part does not apply to engines that are subject to emission standards under 40 CFR part 1045. See 40 CFR 1045.1 to determine when that part 1045 applies. Note that certain requirements and prohibitions apply to engines built on or after January 1, 2010 if they are installed in equipment that will be used solely for competition, as described in 40 CFR 1045.1 and 40 CFR 1068.1; those provisions apply instead of the provisions of this part 91.

[61 FR 52102, Oct. 4, 1996, as amended at 73 FR 59183, Oct. 8, 2008]

§91.2 Applicable date.

This part applies to marine spark-ignition engines beginning with the 1998 model year, except where otherwise specified.

§91.3 Definitions.

The following definitions apply to this part 91. All terms not defined herein have the meaning given them in the Act.

Act means the Clean Air Act, as amended, 42 U.S.C. 7401 *et seq*.

Adjustable parameter means any device, system, or element of design which is physically capable of being adjusted (including those which are difficult to access) and which, if adjusted, may affect emissions or engine performance during emission testing or normal in-use operation.

Administrator means the Administrator of the Environmental Protection Agency or his or her authorized representative.

Amphibious vehicle means a vehicle with wheels or tracks that is designed primarily for operation on land and secondarily for operation in water.

Auxiliary emission control device means any element of design that senses temperature, engine speed, engine RPM, transmission gear, or any other parameter for the purpose of activating, modulating, delaying, or deactivating the operation of any part of the emission control system.

Certification means, with respect to new SI marine engines, obtaining a certificate of conformity for an engine family complying with the marine SI engine emission standards and requirements specified in this part.

Emission control system means any device, system, or element of design which controls or reduces the emission of substances from an engine.

Engine as used in this part, refers to marine SI engine.

Engine family means a group of engines, as specified in § 91.115.

EPA enforcement officer means any officer, employee, or authorized representative of the U.S. Environmental Protection Agency so designated in writing by the Administrator (or by his or her designee).

Exhaust emissions means matter emitted into the atmosphere from any opening downstream from the exhaust port of a marine engine.

Existing technology OB/PWC means an outboard engine or a personal watercraft engine which was in production for the 1997 or any previous model years and that did not utilize newer technologies such as four-stroke technology, direct-injection two-stroke technology, catalyst technology, or other technology used to comply with emission standards which the Administrator determines is a new type of OB/PWC technology.

Family Emission Limit (*FEL*) means an emission level that is declared by the manufacturer to serve in lieu of an emission standard for certification and for the averaging, banking, and trading program. A FEL must be expressed to the same number of decimal places as the applicable emission standard.

Fuel system means all components involved in the transport, metering, and mixture of the fuel from the fuel tank to the combustion chamber(s) including the following: Fuel tank, fuel tank cap, fuel pump, fuel lines, oil injection metering system, carburetor or fuel injection components, and all fuel system vents.

Gross power means the power measured at the crankshaft or its equivalent (for outboards, the power may be measured at the propeller shaft), the engine being equipped only with the standard accessories (such as oil pumps, coolant pumps, and so forth) necessary for its operation on the test bed.

Identification number means a unique specification (for example, model number/serial number combination) which allows a particular marine SI engine to be distinguished from other similar engines.

Inboard engine means a four stroke marine SI engine that is designed such that the propeller shaft penetrates the hull of the marine vessel while the engine and the remainder of the drive unit is internal to the hull of the marine vessel.

Marine engine means a nonroad engine that is installed or intended to be installed on a marine vessel. This includes a portable auxiliary marine engine only if its fueling, cooling, or exhaust system is an integral part of the vessel. There are two kinds of marine engines:

(1) Propulsion marine engine means a marine engine that moves a vessel through the water or directs the vessel's movement.

(2) Auxiliary marine engine means a marine engine not used for propulsion.

Marine engine manufacturer means any person engaged in the manufacturing or assembling of new marine SI engines or the importing of such engines for resale, or who acts for and is under the control of any such person in connection with the distribution of such engines. A marine SI engine manufacturer does not include any dealer with respect to new marine SI engines received by such person in commerce.

Marine spark-ignition engine means a spark-ignition marine engine that propels a marine vessel.

Marine vessel has the meaning given in 1 U.S.C. 3, except that it does not include amphibious vehicles. The definition in 1 U.S.C. 3 very broadly includes every craft capable of being used as a means of transportation on water.

Marine vessel manufacturer means any person engaged in the manufacturing or assembling of new marine vessels or importing such marine vessels for resale, or who acts for and is under the control of any such person in connection with the distribution of such vehicles. A marine vessel manufacturer

does not include any dealer with respect to new marine vessels received by such person in commerce.

Model year means the manufacturer's annual new model production period which includes January 1 of the calendar year for which the model year is named, ends no later than December 31 of the calendar year, and does not begin earlier than January 2 of the previous calendar year. Where a manufacturer has no annual new model production period, model year means the calendar year.

New, for purposes of this part, means a nonroad engine, nonroad vehicle, or nonroad equipment the equitable or legal title to which has never been transferred to an ultimate purchaser. Where the equitable or legal title to the engine, vehicle or equipment is not transferred to an ultimate purchaser until after the engine, vehicle, or equipment is placed into service, then the engine, vehicle, or equipment will no longer be new after it is placed into service. A nonroad engine, vehicle, or equipment is placed into service when it is used for its functional purposes. With respect to imported nonroad engines, nonroad vehicles, or nonroad equipment, the term ''new'' means an engine, vehicle, or piece of equipment that is not covered by a certificate of conformity issued under this part at the time of importation, and that is manufactured after the effective date of a regulation issued under this part which is applicable to such engine, vehicle, or equipment, or which would be applicable to such engine, vehicle, or equipment had it been manufactured for importation into the United States.

Nonroad engine has the meaning as defined in 40 CFR 89.2.

Nonroad vehicle has the meaning as defined in 40 CFR 89.2.

Nonroad equipment has the meaning as defined in 40 CFR 89.2.

Operating hours means:

(1) For engine storage areas or facilities, all times during which personnel other than custodial personnel are at work in the vicinity of the storage area or facility and have access to it.

(2) For all other areas or facilities, all times during which an assembly line is in operation or all times during which testing, maintenance, service accumulation, production or compilation of records, or any other procedure or activity related to certification testing, to translation of designs from the test stage to the production stage, or to engine manufacture or assembly is being carried out in a facility.

Outboard engine is a marine SI engine that, when properly mounted on a marine vessel in the position to operate, houses the engine and drive unit external to the hull of the marine vessel.

Personal watercraft engine (PWC) is a marine SI engine that does not meet the definition of outboard engine, inboard engine or sterndrive engine, except that the Administrator in his or her discretion may classify a PWC as an inboard or sterndrive engine if it is comparable in technology and emissions to an inboard or sterndrive engine.

Presentation of credentials means the display of the document designating a person as an EPA enforcement officer or EPA authorized representative.

Scheduled maintenance means any adjustment, repair, removal, disassembly, cleaning, or replacement of components or systems required by the manufacturer to be performed on a periodic basis to prevent part failure or marine vessel or engine malfunction, or those actions anticipated as necessary to correct an overt indication of malfunction or failure for which periodic maintenance is not appropriate.

Spark-ignition means relating to a gasoline-fueled engine or any other type of engine with a spark plug (or other sparking device) and with operating characteristics significantly similar to the theoretical Otto combustion cycle. Spark-ignition engines usually use a throttle to regulate intake air flow to control power during normal operation.

Sterndrive engine means a four stroke marine SI engine that is designed such that the drive unit is external to the hull of the marine vessel, while the engine is internal to the hull of the marine vessel.

Test engine means the engine or group of engines that a manufacturer uses during certification, production line and in-use testing to determine compliance with emission standards.

Ultimate purchaser means, with respect to any new marine SI engine the first person who in good faith purchases such new marine SI engine for purposes other than resale.

United States means the States, the District of Columbia, the Commonwealth of Puerto Rico, the Commonwealth of the Northern Mariana Islands, Guam, American Samoa, and the U.S. Virgin Islands.

Used solely for competition means exhibiting features that are not easily removed and that would render its use other than in competition unsafe, impractical, or highly unlikely.

Warranty period means the period of time the engine or part is covered by the warranty provisions.

[61 FR 52102, Oct. 4, 1996, as amended at 67 FR 68340, Nov. 8, 2002; 70 FR 40451, July 13, 2005]

§ 91.4 Acronyms and abbreviations.

The following acronyms and abbreviations apply to this part 91.

AECD—Auxiliary emission control device
ASME—American Society of Mechanical Engineers
ASTM—American Society for Testing and Materials
CAA—Clean Air Act
CAAA—Clean Air Act Amendments of 1990
CLD—chemiluminescent detector
CO—Carbon monoxide
CO_2—Carbon dioxide
EPA—Environmental Protection Agency
FEL—Family Emission Limit
g/kw-hr—grams per kilowatt hour
HC—hydrocarbons
HCLD—heated chemiluminescent detector
HFID—heated flame ionization detector
ICI—Independent Commercial Importer
MY—Model Year
NDIR—non-dispersive infrared analyzer
NIST—National Institute for Standards and Testing
NO—Nitric oxide
NO_2—Nitrogen dioxide
NO_X—Oxides of nitrogen
OB—Outboard engine
O_2—Oxygen
OEM—Original engine manufacturer
PMD—paramagnetic detector
PWC—personal watercraft
RPM—revolutions per minute
SAE—Society of Automotive Engineers
SEA—Selective Enforcement Auditing
SI—Spark-ignition
U.S.C.—United States Code
VOC—Volatile organic compounds
ZROD—zirconium dioxide sensor

§ 91.5 Table and figure numbering; position.

(a) Tables for each subpart appear in an appendix at the end of the subpart. Tables are numbered consecutively by order of appearance in the appendix. The table title will indicate the topic.

(b) Figures for each subpart appear in an appendix at the end of the subpart. Figures are numbered consecutively by order or appearance in the appendix. The figure title will indicate the topic.

§ 91.6 Reference materials.

(a) *Incorporation by reference.* The documents in paragraph (b) of this section have been incorporated by reference. The incorporation by reference was approved by the Director of the Federal Register in accordance with 5 U.S.C. 552(a) and 1 CFR part 51. Copies may be inspected at U.S. EPA, OAR, Air and Radiation Docket and Information Center, 401 M St., SW., Washington, DC 20460, or at the National Archives and Records Administration (NARA). For information on the availability of this material at NARA, call 202–741–6030, or go to: *http://www.archives.gov/federal_register/code_of_federal_regulations/ibr_locations.html.*

(b) The following paragraphs and tables set forth the material that has been incorporated by reference in this part.

(1) *ASTM material.* The following table sets forth material from the American Society for Testing and Materials which has been incorporated by reference. The first column lists the number and name of the material. The second column lists the section(s) of this part, other than § 91.6, in which the matter is referenced. The second column is presented for information only and may not be all inclusive. Copies of these materials may be obtained from American Society for Testing and Materials, 1916 Race St., Philadelphia, PA 19103.

Document number and name	40 CFR part 91 reference
ASTM D86–93:	
Standard Test Method for Distillation of Petroleum Products	Appendix A to Subpart D.

Document number and name	40 CFR part 91 reference
ASTM D323–90:	
Standard Test Method for Vapor Pressure of Petroleum Products (Reid Method).	Appendix A to Subpart D.
ASTM D1319–93:	
Standard Test Method for Hydrocarbon Types in Liquid Petroleum Products by Fluorescent Indicator Adsorption.	Appendix A to Subpart D.
ASTM D2622–92:	
Standard Test Method for Sulfur in Petroleum Products by X-Ray Spectrometry.	Appendix A to Subpart D.
ASTM D2699–92:	
Standard Test Method for Knock Characteristics of Motor Fuels by the Research Method.	Appendix A to Subpart D.
ASTM D2700–92:	
Standard Test Method for Knock Characteristics of Motor and Aviation Fuels by the Motor Method.	Appendix A to Subpart D.
ASTM D3231–89:	
Standard Test Method for Phosphorus in Gasoline	Appendix A to Subpart D.
ASTM D3606–92:	
Standard Test Method for Determination of Benzene and Toluene in Finished Motor and Aviation Gasoline by Gas Chromatography.	Appendix A to Subpart D.
ASTM E29–93a:	
Standard Practice for Using Significant Digits in Test Data to Determine Conformance with Specifications.	91.207; 91.120; 91.509; 91.1307.

(2) *SAE material*. The following table sets forth material from the Society of Automotive Engineers which has been incorporated by reference. The first column lists the number and name of the material. The second column lists the section(s) of this part, other than §91.7, in which the matter is referenced. The second column is presented for information only and may not be all inclusive. Copies of these materials may be obtained from Society of Automotive Engineers International, 400 Commonwealth Dr., Warrendale, PA 15096–0001.

Document number and name	40 CFR part 91 reference
SAE J1228/ISO 8665 November 1991 Small Craft-Marine Propulsion Engine and Systems-Power Measurements and Declarations.	91.104, 91.115; 91.118; 91.207; 91.1307.
SAE J1930 June 1993 Electrical/Electronic Systems Diagnostic Terms, Definitions, Abbreviations and Acronyms.	91.113.
SAE Paper 770141 Optimization of a Flame Ionization Detector for Determination of Hydrocarbon in Diluted Automotive Exhausts, Glenn D. Reschke, 1977.	91.316

§91.7 Treatment of confidential information.

(a) Any manufacturer may assert that some or all of the information submitted pursuant to this part is entitled to confidential treatment as provided by part 2, subpart B, of this chapter.

(b) Any claim of confidentiality must accompany the information at the time it is submitted to EPA.

(c) To assert that information submitted pursuant to this subpart is confidential, a manufacturer must indicate clearly the items of information claimed confidential by marking, circling, bracketing, stamping, or otherwise specifying the confidential information. Furthermore, EPA requests, but does not require, that the submitter also provide a second copy of its submittal from which all confidential information has been deleted. If a need arises to publicly release nonconfidential information, EPA will assume that the submitter has accurately deleted the confidential information from this second copy.

(d) If a claim is made that some or all of the information submitted pursuant to this subpart is entitled to confidential treatment, the information covered by that confidentiality claim will be disclosed by the Administrator only to the extent and by means of the procedures set forth in part 2, subpart B, of this chapter.

(e) Information provided without a claim of confidentiality at the time of submission may be made available to the public by EPA without further notice to the submitter, in accordance with § 2.204(c)(2)(i)(A) of this chapter.

Subpart B—Emission Standards and Certification Provisions

§ 91.101 Applicability.

(a) The requirements of this subpart B are applicable to all engines subject to the provisions of subpart A of this part.

(b) In a given model year, you may ask us to approve the use of procedures for certification, labeling, reporting and recordkeeping, or other administrative requirements specified in 40 CFR part 1045 or 1068 instead of the comparable procedures specified in this part 91. We may approve the request as long as it does not prevent us from ensuring that you fully comply with the intent of this part.

[73 FR 59183, Oct. 8, 2008]

§ 91.102 Definitions.

The definitions in subpart A of this part 91 apply to this subpart. All terms not defined herein or in subpart A of this part have the meaning given them in the Act.

§ 91.103 Averaging, banking, and trading of exhaust emission credits.

Regulations regarding averaging, banking, and trading provisions along with applicable recordkeeping requirements are found in subpart C of this part.

§ 91.104 Exhaust emission standards for outboard and personal watercraft engines.

(a) New marine spark-ignition outboard and personal watercraft engines for use in the U.S. must meet the following exhaust emission standards for $HC+NO_X$. The exhaust emission standard for each model year is provided below. It is also used as input to the calculation procedure in § 91.207 to determine compliance with the corporate average $HC+NO_X$ exhaust emission standard.

HYDROCARBON PLUS OXIDES OF NITROGEN EXHAUST EMISSION STANDARDS

[grams per kilowatt-hour]

Model year	P < 4.3 kW $HC+NO_X$ emission standard by model year	P > 4.3 kW $HC+NO_X$ emission standard by model year
1998	278.00	$(0.917 \times (151 + 557/P^{0.9})) + 2.44$
1999	253.00	$(0.833 \times (151 + 557/P^{0.9})) + 2.89$
2000	228.00	$(0.750 \times (151 + 557/P^{0.9})) + 3.33$
2001	204.00	$(0.667 \times (151 + 557/P^{0.9})) + 3.78$
2002	179.00	$(0.583 \times (151 + 557/P^{0.9})) + 4.22$
2003	155.00	$(0.500 \times (151 + 557/P^{0.9})) + 4.67$
2004	130.00	$(0.417 \times (151 + 557/P^{0.9})) + 5.11$
2005	105.00	$(0.333 \times (151 + 557/P^{0.9})) + 5.56$
2006 and later	81.00	$(0.250 \times (151 + 557/P^{0.9})) + 6.00$

where:

P = the average power of an engine family in kW (sales weighted). The power of each configuration is the rated output in kilowatts as determined by SAE J1228. This procedure has been incorporated by reference. See § 91.6.

(b) Exhaust emissions are measured using the procedures set forth in subpart E of this part.

(c) Manufacturers must designate a Family Emission Limit (FEL) for $HC+NO_X$ for every engine family. The FEL may be equal to the emission standard in paragraph (a) of this section. The FEL established through certification serves as the emission standard for the engine family and emissions may not exceed the FEL levels for $HC+NO_X$ for all engines sold in the engine family, for their useful life.

(d) A manufacturer must comply with a corporate average $HC+NO_X$ emission standard as determined in accordance with subpart C § 91.207.

§91.105 Useful life period, recall, and warranty periods.

(a) The useful life for PWC engines is a period of 350 hours of operation or 5 years of use, whichever first occurs. The useful life for Outboard marine spark-ignition engines is a period of 350 hours of operation or 10 years of use, whichever first occurs.

(b) PWC engines are subject to recall testing for a period of 350 hours of operation or 5 years of use, whichever first occurs. Outboard marine spark-ignition engines are subject to recall testing for a period of 350 hours of operation or 10 years of use, whichever first occurs. However, for purposes of this part only, if the Administrator should issue a nonconformity determination, then only those engines that are within the useful life as of the date of the nonconformity determination are subject to recall repair requirements.

(c) Warranty periods are set out in subpart M of this part.

§91.106 Certificate of conformity.

(a) Every manufacturer of a new marine SI engine produced during or after the 1998 model year for outboard engines and the 1999 model year for PWC engines, must obtain a certificate of conformity covering each engine family. The certificate of conformity must be obtained from the Administrator prior to selling, offering for sale, introducing into commerce, or importing into the United States the new marine SI engine.

(b) The certificate of conformity is valid for the model year for which it is designated.

§91.107 Application for certification.

(a) For each engine family, the engine manufacturer must submit to the Administrator a completed application for a certificate of conformity, except that with respect to an existing technology OB/PWC engine a manufacturer may, in lieu of providing such application, submit to the Administrator summary testing and other information as determined by the Administrator.

(b) The application must be approved and signed by the authorized representative of the manufacturer.

(c) The application must be updated and corrected by amendment as provided in §91.122 to accurately reflect the manufacturer's production.

(d) Required content. Each application must include the following information:

(1) A description of the basic engine design including, but not limited to, the engine family specifications;

(2) An explanation of how the emission control system operates, including a detailed description of all emission control system components (detailed component calibrations are not required to be included, however they must be provided if requested), each auxiliary emission control device (AECD), and all fuel system components to be installed on any production or test engine(s);

(3) Proposed test fleet selection and the rationale for the test fleet selection;

(4) Special or alternative test procedures, if applicable;

(5) The description of the operating cycle and the service accumulation period necessary to break in the test engine(s) and stabilize emission levels and any maintenance scheduled;

(6) A description of all adjustable operating parameters, including the following:

(i) The nominal or recommended setting and the associated production tolerances;

(ii) The intended physically adjustable range;

(iii) The limits or stops used to establish adjustable ranges;

(iv) Production tolerances of the limits or stops used to establish each physically adjustable range; and

(v) Information relating to why the physical limits or stops used to establish the physically adjustable range of each parameter, or any other means used to inhibit adjustment, are effective in preventing adjustment of parameters to settings outside the manufacturer's intended physically adjustable ranges on in-use engines;

(7) Regarding the averaging, banking, and trading provisions, the information specified in §91.208;

(8) The proposed maintenance and use instructions the manufacturer will furnish to the ultimate purchaser of each new engine and the proposed emission control label;

(9) All test data, for HC, CO and NO_X. obtained by the manufacturer on each test engine;

(10) A statement that the test engine(s), as described in the manufacturer's application for certification, has been tested in accordance with the applicable test procedures, utilizing the fuels and equipment described in the application, and that on the basis of such tests the engine(s) conforms to the requirements of this part; and

(11) An unconditional statement certifying that all engines in the engine family comply with all requirements of this part and the Clean Air Act.

(12) Identification of an agent for service located in the United States. Service on this agent constitutes service on you or any of your officers or employees for any action by EPA or otherwise by the United States related to the requirements of this part.

(e) At the Administrator's request, the manufacturer must supply such additional information as may be required to evaluate the application including, but not limited to, projected marine SI engine production.

(f) (1) The Administrator may modify the information submission requirements of paragraph (d) of this section, provided the information specified therein is maintained by the engine manufacturer as required by § 91.121, and amended, updated, or corrected as necessary.

(2) For the purposes of this paragraph, § 91.121(a)(1) includes all information specified in paragraph (d) of this section whether or not such information is actually submitted to the Administrator for any particular model year.

(3) The Administrator may review an engine manufacturer's records at any time.

[61 FR 52102, Oct. 4, 1996, as amended at 73 FR 59183, Oct. 8, 2008]

§ 91.108 Certification.

(a) If, after a review of the manufacturer's submitted application, or with respect to an existing technology OB/PWC engine manufacturer's summary information submitted pursuant to § 91.107(a), information obtained from any inspection, and such other information as the Administrator may require, the Administrator determines that the application or summary information is complete and that the engine family meets the requirements of this part and the Clean Air Act, the Administrator shall issue a certificate of conformity for the engine family.

(b) The Administrator shall give a written explanation when certification is denied. The manufacturer may request a hearing on a denial. (*See* § 91.124 for procedure.)

§ 91.109 Requirement of certification—closed crankcase.

(a) An engine's crankcase must be closed.

(b) For purposes of this section, *crankcase* means the housing for the crankshaft and other related internal parts.

§ 91.110 Requirement of certification—prohibited controls.

(a) An engine may not be equipped with an emission control device, system, or element of design for the purpose of complying with emission standards if such device, system, or element of design will cause or contribute to an unreasonable risk to public health, welfare, or safety in its operation or function.

(b) You may not design your engines with emission-control devices, systems, or elements of design that cause or contribute to an unreasonable risk to public health, welfare, or safety while operating. For example, this would apply if the engine emits a noxious or toxic substance it would otherwise not emit that contributes to such an unreasonable risk.

[61 FR 52102, Oct. 4, 1996, as amended at 67 FR 68340, Nov. 8, 2002]

§ 91.111 Requirement of certification—prohibition of defeat devices.

(a) An engine may not be equipped with a defeat device.

(b) For purposes of this section, *defeat device* means any device, system, or element of design which senses operation outside normal emission test conditions and reduces emission control effectiveness.

(1) Defeat device includes any auxiliary emission control device (AECD) that reduces the effectiveness of the

emission control system under conditions which may reasonably be expected to be encountered in normal operation and use, unless such conditions are included in the test procedure.

(2) Defeat device does not include such items which either operate only during engine starting or are necessary to protect the engine (or vehicle or equipment in which it is installed) against damage or accident during its operation.

§91.112 Requirement of certification—adjustable parameters.

(a) Engines equipped with adjustable parameters must comply with all requirements of this subpart for any adjustment in the physically available range.

(b) An operating parameter is not considered adjustable if it is permanently sealed by the manufacturer or otherwise not normally accessible using ordinary tools.

(c) The Administrator may require that adjustable parameters be set to any specification within the adjustable range during certification, production line testing, selective enforcement auditing or any in-use testing to determine compliance with the requirements of this part.

§91.113 Requirement of certification—emission control information label and engine identification number.

(a) The engine manufacturer must affix at the time of manufacture a permanent and legible label identifying each engine. The label must meet the following requirements:

(1) Be attached in such a manner that it cannot be removed without destroying or defacing the label;

(2) Be durable and readable for the entire engine life;

(3) Be secured to an engine part necessary for normal engine operation and not normally requiring replacement during engine life;

(4) Be written in English; and

(5) Be located so as to be readily visible to the average person after the engine is installed in the marine vessel.

(b) If the marine vessel obscures the label on the engine, the marine vessel manufacturer must attach a supplemental label so that this label is readily visible to the average person. The supplemental label must:

(1) Be attached in such a manner that it cannot be removed without destroying or defacing the label;

(2) Be secured to a marine vessel part necessary for normal operation and not normally requiring replacement during the marine vessel life; and

(3) Be identical to the label which was obscured.

(c) The label must contain the following information:

(1) The heading ''Emission Control Information;''

(2) The full corporate name and trademark of the engine manufacturer;

(3) The statement, ''This (vessel's engine or engine, as applicable) is certified to operate on (specify operating fuel(s));''

(4) Identification of the Exhaust Emission Control System (Abbreviations may be used and must conform to the nomenclature and abbreviations provided in SAE J1930. This procedure has been incorporated by reference. *See* §91.6.;

(5) All engine lubricant requirements;

(6) date of manufacture [day(optional), month and year];

(7) The statement ''This engine conforms to [model year] U.S. EPA regulations for marine SI engines.'';

(8) Family Emission Limits (FELs);

(9) EPA standardized engine family designation;

(10) Engine displacement [in cubic centimeters]; and

(11) Advertised power;

(12) Engine tuneup specifications and adjustments. These should indicate the proper transmission position during tuneup, and accessories, if any, that should be in operation;

(13) Fuel requirements;

(14) Other information concerning proper maintenance and use or indicating compliance or noncompliance with other standards may be indicated on the label.

(d) If there is insufficient space on the engine to accommodate a label including all the information required in paragraph (c) of this section, the manufacturer may delete or alter the label as indicated in this paragraph. The information deleted from the label must appear in the owner's manual.

(1) Exclude the information required in paragraphs (c) (3), (4), and (5) of this section. The fuel or lubricant may be specified elsewhere on the equipment.

(2) Exclude the information required by paragraph (c)(6) of this section, if the date the engine was manufactured is stamped on the engine.

(3) For existing technology OB/PWC only, exclude the information required by paragraphs (c) (10), (11), (13), and (14) of this section.

(e) The Administrator may, upon request, waive or modify the label content requirements of paragraphs (c) and (d) of this section, provided that the intent of such requirements is met.

(f) Engine Identification Number. Each engine must have a legible, unique engine identification number permanently affixed to or engraved on the engine.

§ 91.114 Requirement of certification—supplying production engines upon request.

Upon the Administrator's request, the manufacturer must supply a reasonable number of production engines for testing and evaluation. These engines must be representative of typical production and supplied for testing at such time and place and for such reasonable periods as the Administrator may require.

§ 91.115 Certification procedure—determining engine power and engine families.

(a) Engine power must be calculated using SAE J1228. This procedure has been incorporated by reference. *See* § 91.6.

(b) The manufacturer's product line must be divided into engine families as specified by paragraph (c) of this section, comprised of engines expected to have similar emission characteristics throughout their useful life periods.

(c) To be classed in the same engine family, engines must be identical in all of the following applicable respects:

(1) The combustion cycle;

(2) The cooling mechanism;

(3) The cylinder configuration (inline, vee, opposed, bore spacings, and so forth);

(4) The number of cylinders;

(5) The number of catalytic converters, location; volume, and composition; and

(6) The thermal reactor characteristics.

(d) At the manufacturer's request, engines identical in all the respects listed in paragraph (c) of this section may be further divided into different engine families if the Administrator determines that they may be expected to have different emission characteristics. This determination is based upon the consideration of features such as:

(1) The bore and stroke;

(2) The combustion chamber configuration;

(3) The intake and exhaust timing method of actuation (poppet valve, reed valve, rotary valve, and so forth);

(4) The intake and exhaust valve or port sizes, as applicable;

(5) The fuel system;

(6) The exhaust system; and

(7) The method of air aspiration.

(e) Where engines are of a type which cannot be divided into engine families based upon the criteria listed in paragraph (c) of this section, the Administrator shall establish families for those engines based upon the features most related to their emission characteristics.

(f) Upon a showing by the manufacturer that the emission characteristics during the useful life are expected to be similar, engines differing in one or more of the characteristics in paragraph (c) of this section may be grouped in the same engine family.

(g) Upon a showing by the manufacturer that the emission characteristics during the useful life are expected to be dissimilar, engines identical in all the characteristics in paragraph (c) of this section may be divided into separate engine families.

§ 91.116 Certification procedure—test engine selection.

(a) The manufacturer must select, from each engine family, a test engine of a configuration that the manufacturer deems to be most likely to exceed the Family Emission Limit (FEL).

(b) At the manufacturer's option, the criterion for selecting the worst case engine may be that engine configuration which has the highest weighted

brake-specific fuel consumption over the appropriate engine test cycle.

(c) The test engine must be constructed to be representative of production engines.

§91.117 Certification procedure—service accumulation.

(a)(1) Any engine required to be tested under §91.118 must be operated with all emission control systems operating properly for a period sufficient to stabilize emissions prior to such testing.

(2) A manufacturer may elect to consider emission levels as stabilized when the test engine has accumulated 12 hours of service.

(b) No maintenance, other than recommended lubrication and filter changes, may be performed during service accumulation without the Administrator's approval.

(c) Service accumulation is to be performed in a manner using good engineering judgment to ensure that emissions are representative of production engines.

(d) The manufacturer must maintain, and provide to the Administrator if requested, records stating the rationale for selecting a service accumulation period different than 12 hours and records describing the method used to accumulate hours on the test engine(s).

§91.118 Certification procedure—testing.

(a) *Manufacturer testing*. The manufacturer must test the test engine using the specified test procedures and appropriate test cycle. All test results must be reported to the Administrator.

(1) The test procedures to be used are detailed in subpart E of this part.

(2) Emission test equipment provisions are described in subpart D of this part.

(b) *Administrator testing*. (1) The Administrator may require that any one or more of the test engines be submitted to the Administrator, at such place or places as the Administrator may designate, for the purposes of conducting emission tests. The Administrator may specify that testing will be conducted at the manufacturer's facility, in which case instrumentation and equipment specified by the Administrator must be made available by the manufacturer for test operations. Any testing conducted at a manufacturer's facility must be scheduled by the manufacturer as promptly as possible.

(2)(i) Whenever the Administrator conducts a test on a test engine, the results of that test will, unless subsequently invalidated by the Administrator, comprise the official data for the engine and the manufacturer's data will not be used in determining compliance with the Family Emission Limit (FEL).

(ii) Prior to the performance of such a test, the Administrator may adjust or cause to be adjusted any adjustable parameter of the test engine which the Administrator has determined to be subject to adjustment for testing, to any setting within the physically adjustable range of that parameter, to determine whether the engine conforms to the applicable Family Emission Limit (FEL).

(iii) For those engine parameters which the Administrator has not determined to be subject to adjustment for testing, the test engine presented to the Administrator for testing will be calibrated within the production tolerances applicable to the manufacturer specification shown on the engine label, as specified in the application for certification.

(c) *Use of carryover test data*. In lieu of testing, the manufacturer may submit, with the Administrator's approval, emission test data used to certify substantially similar engine families in previous years. This ''carryover'' test data is only allowable if the data shows the test engine would fully comply with the applicable Family Emission Limit (FEL).

(d) *Scheduled maintenance during testing*. No scheduled maintenance may be performed during testing of the engine.

(e) *Unscheduled maintenance on test engines*. (1) Manufacturers may not perform any unscheduled engine, emission control system, or fuel system adjustment, repair, removal, disassembly, cleaning, or replacement on a test engine without the advance approval of the Administrator.

(2) The Administrator may approve such maintenance if:

(i) A preliminary determination has been made that a part failure or system malfunction, or the repair of such failure or malfunction, does not render the engine unrepresentative of engines in use, and does not require direct access to the combustion chamber; and

(ii) A determination has been made that the need for maintenance or repairs is indicated by an overt malfunction such as persistent misfire, engine stall, overheating, fluid leakage, or loss of oil pressure.

(3) Emission measurements may not be used as a means of determining the need for unscheduled maintenance under paragraph (e)(2) of this section.

(4) The Administrator must have the opportunity to verify the extent of any overt indication of part failure (for example, misfire, stall), or an activation of an audible and/or visual signal, prior to the manufacturer performing any maintenance related to such overt indication or signal.

(5) Unless approved by the Administrator prior to use, engine manufacturers may not use any equipment, instruments, or tools to identify malfunctioning, maladjusted, or defective engine components unless the same or equivalent equipment, instruments, or tools are available at dealerships and other service outlets and are used in conjunction with scheduled maintenance on such components.

(6) If the Administrator determines that part failure or system malfunction occurrence and/or repair rendered the engine unrepresentative of production engines, the engine may not be used as a test engine.

(7) Unless waived by the Administrator, complete emission tests are required before and after any engine maintenance which may reasonably be expected to affect emissions.

(f) *Engine failure.* A manufacturer may not use as a test engine any engine which incurs major mechanical failure necessitating disassembly of the engine. This prohibition does not apply to failures which occur after completion of the service accumulation period.

(g) In lieu of providing or generating emission data under this section for existing technology, the Administrator may allow the manufacturer to demonstrate (on the basis of previous emission tests, development tests, or other testing information) that the engine will conform with the applicable FEL.

(h)(1) Manufacturers may select an FEL for existing technology OB/PWC through:

(i) Model year 2000 based on the function $151+557/P^{0.9}$ where P=average power of an engine family in kW (sales weighted). The power of each configuration is the rated output in kilowatts as determined by SAE J1228. (This procedure has been incorporated by reference. See § 91.6). The certificate of conformity would be conditioned by requirements that the manufacturer submit test data, as determined appropriate by the Administrator under § 91.118(h) by the end of model year 2000; that the FEL is revised and approved by EPA to reflect the test data; that the credits associated with the engine family are recalculated based on the difference between the old FEL and the new FEL; and that the new FEL applies to all engines covered by the certificate of conformity; or

(ii) Model year 2003 based on good engineering judgement.

(2) Upon request by the manufacturer, the Administrator has the discretion to extend the time period set forth in paragraph (h)(1) of this section for a specific engine family up to model year 2005 if the Administrator determines that an engine family will be phased out of U.S. production by model year 2005. As a condition to being granted such an extension, the manufacturer must discontinue U.S. production according to the schedule upon which the Administrator based the extension. Failure to do so by the manufacturer will void the certificate of conformity *ab initio*.

(i) A manufacturer request under paragraph (h)(2) of this section must be in writing and must apply to a specific engine family. The request must identify the engine family designation, the rationale supporting the FEL choice, the type of information used as a basis for the FEL (e.g., previous emission tests, development tests), the specific source of the information including when the information was generated, the schedule for phasing the engine family out of U.S. production, and any

other information the Administrator may require.

§91.119 Certification procedure—use of special test procedures.

(a) *Use of special test procedures by EPA.* The Administrator may establish special test procedures for any engine that the Administrator determines is not susceptible to satisfactory testing under the specified test procedures set forth in subpart E of this part.

(b) *Use of alternative test procedures by an engine manufacturer.* (1) A manufacturer may elect to use an alternative test procedure provided that it yields results equivalent to the results from the specified test procedure in subpart E, its use is approved in advance by the Administrator, and the basis for equivalent results with the specified test procedures is fully described in the manufacturer's application.

(2) An engine manufacturer electing to use alternate test procedures is solely responsible for the results obtained. The Administrator may reject data generated under test procedures which do not correlate with data generated under the specified procedures.

(3) A manufacturer may elect to use the test procedures in 40 CFR part 1065 as an alternate test procedure without getting advance approval by the Administrator or meeting the other conditions of paragraph (b)(1) of this section. The manufacturer must identify in its application for certification that the engines were tested using the procedures in 40 CFR part 1065. For any EPA testing with engines subject to standards under this part, EPA will use the manufacturer's selected procedures for mapping engines, generating duty cycles, and applying cycle-validation criteria. For any other parameters, EPA may conduct testing using either of the specified procedures.

(4) Where we specify mandatory compliance with the procedures of 40 CFR part 1065, manufacturers may elect to use the procedures specified in 40 CFR part 86, subpart N, as an alternate test procedure without advance approval by the Administrator.

[61 FR 52102, Oct. 4, 1996, as amended at 70 FR 40451, July 13, 2005; 73 FR 59183, Oct. 8, 2008]

§91.120 Compliance with Family Emission Limits over useful life.

(a) If all test engines representing an engine family have emissions, as determined in paragraph (c)(3)(iii) of this section, less than or equal to the applicable Family Emission Limit (FEL) for each pollutant as determined according to §91.104 (c), that family complies with the Family Emission Limit .

(b) If any test engine representing an engine family has emissions (as determined in paragraph (c)(3)(iii) of this section, greater than the applicable Family Emission Limit for any pollutant as determined according to §91.104(c), that family will be deemed not in compliance with the Family Emission Limits.

(c)(1) The engine Family Emission Limits (FELs) apply to the emissions of engines for their useful lives.

(2) Since emission control efficiency generally decreases with the accumulation of service on the engine, deterioration factors must be used in combination with emission data engine test results as the basis for determining compliance with the standards.

(3)(i) Paragraph (c)(3)(ii) of this section describes the procedure for determining compliance of an engine with family emission limits, based on deterioration factors supplied by the manufacturer.

(ii) Separate exhaust emission deterioration factors, determined by the manufacturer, must be supplied for each engine family. The deterioration factors must be applied as follows:

(A) For marine spark-ignition engines not utilizing aftertreatment technology (for example, catalytic converters), the official exhaust emission results for each emission data engine at the selected test point are adjusted by adding the appropriate deterioration factor to the results. However, if the deterioration factor supplied by the manufacturer is less than zero, it is zero for the purposes of this paragraph.

(B) For marine spark-ignition engines utilizing aftertreatment technology (for example, catalytic converters), the official exhaust emission results for each emission data engine at the selected test point are adjusted

by multiplying the results by the appropriate deterioration factor. However, if the deterioration factor supplied by the manufacturer is less than one, it is one for the purposes of this paragraph.

(iii) The emission values to compare with the Family Emission Limits (FELs) are the adjusted emission values of paragraph (c)(3)(ii) of this section, rounded to the same number of significant figures as contained in the applicable standard in accordance with ASTM E 29–93a, for each emission data engine. This procedure has been incorporated by reference. See § 91.6.

§ 91.121 Certification procedure—recordkeeping.

(a) The engine manufacturer must maintain the following adequately organized records:

(1) Copies of all applications and summary information, as applicable, filed with the Administrator;

(2) A copy of all data obtained through the production line and in-use testing programs; and

(3) A detailed history of each test engine used for certification including the following:

(i) A description of the test engine's construction, including a general description of the origin and buildup of the engine, steps taken to insure that it is representative of production engines, description of components specially built for the test engine, and the origin and description of all emission-related components;

(ii) A description of the method used for engine service accumulation, including date(s) and the number of hours accumulated;

(iii) A description of all maintenance, including modifications, parts changes, and other servicing performed, and the date(s), and reason(s) for such maintenance;

(iv) A description of all emission tests performed, including routine and standard test documentation, as specified in subpart E of this part, date(s), and the purpose of each test;

(v) A description of all tests performed to diagnose engine or emission control performance, giving the date and time of each and the reason(s) for the test; and

(vi) A description of any significant event(s) affecting the engine during the period covered by the history of the test engine but not described by an entry under one of the previous paragraphs of this section.

(b) Routine emission test data, such as test cell temperature and relative humidity at start and finish of test and raw emission results from each mode or test phase, must be retained for a period of one year after issuance of all certificates of conformity to which they relate. All other information specified in paragraph (a) of this section must be retained for a period of eight years after issuance of all certificates of conformity to which they relate.

(c) Records may be kept in any format and on any media, provided that, at the Administrator's request, organized, written records in English are promptly supplied by the manufacturer.

(d) The manufacturer must supply, at the Administrator's request, copies of any engine maintenance instructions or explanations issued by the manufacturer.

§ 91.122 Amending the application and certificate of conformity.

(a) The marine engine manufacturer must notify the Administrator

(1) When either an engine is to be added to a certificate of conformity or changes are to be made to a product line covered by a certificate of conformity which may potentially affect emissions, emissions durability, an emission related part, or the durability of an emission related part. Notification occurs when the manufacturer submits and EPA receives a request to amend the original application prior to either producing such engines or making such changes to a product line. For existing technology OB/PWC engines only, notification may occur periodically but must occur at least on a quarterly basis and may be submitted summarily as determined by the Administrator.

(2) When an FEL is changed for an engine family, as allowed under § 91.203. Notification occurs when the manufacturer submits and EPA receives a request to amend the original application. The manufacturer may not

change an FEL unless compliance under §91.207(b) is maintained through the use of the revised FEL.

(b) The request to amend the engine manufacturer's existing certificate of conformity must include the following information:

(1) A full description of the engine to be added or the change(s) to be made in production;

(2) The manufacturer's proposed test engine selection(s); and

(3) Engineering evaluations or reasons why the original test engine or FEL is or is not still appropriate.

(c) The Administrator may require the engine manufacturer to perform tests on an engine representing the engine to be added or changed.

(d) Decision by Administrator.

(1) Based on the submitted request and data derived from such testing as the Administrator may require or conduct, the Administrator must determine whether the proposed addition or change would still be covered by the certificate of conformity then in effect.

(2) If the Administrator determines that the new or changed engine(s) meets the requirements of this subpart and the Act, the appropriate certificate of conformity will be amended.

(3) If the Administrator determines that the new or changed engines would not be covered by the certificate of conformity, the Administrator must provide a written explanation to the engine manufacturer of his or her decision not to amend the certificate. The manufacturer may request a hearing on a denial. See §91.125.

(4) If the Administrator determines that the revised FEL meets the requirements of this subpart and the Act, the appropriate certificate of conformity will be amended to reflect the revised FEL. The certificate of conformity is revised conditional upon compliance under §91.207(b).

(e)(1) Alternatively, an engine manufacturer may make changes in or additions to production engines concurrently with requesting to amend the application or certification of conformity as set forth in paragraph (b) of this section, if the manufacturer determines that all affected engines will still meet applicable Family Emission Limits (FELs). The engine manufacturer must supply supporting documentation, test data, and engineering evaluations as appropriate to support its determination.

(2) If, after a review, the Administrator determines additional testing is required, the engine manufacturer must provide required test data within 30 days or cease production of the affected engines.

(3) If the Administrator determines that the affected engines do not meet applicable requirements, the Administrator will notify the engine manufacturer to cease production of the affected engines.

§91.123 Denial, revocation of certificate of conformity.

(a) If, after review of the engine manufacturer's application, request for certification, information obtained from any inspection, and any other information the Administrator may require, the Administrator determines that the test engine or engine family does not meet applicable requirements or the Family Emission Limit (FEL), the Administrator will notify the manufacturer in writing, setting forth the basis for this determination.

(b) Notwithstanding the fact that engines described in the application may comply with all other requirements of this subpart, the Administrator may deny the issuance of or revoke a previously issued certificate of conformity if the Administrator finds any one of the following infractions to be substantial:

(1) The engine manufacturer submits false or incomplete information;

(2) The engine manufacturer denies an EPA enforcement officer or EPA authorized representative the opportunity to conduct authorized inspections;

(3) The engine manufacturer fails to supply requested information or amend its application to include all engines being produced;

(4) The engine manufacturer renders inaccurate any test data which it submits or otherwise circumvents the intent of the Act or this part;

(5) The engine manufacturer denies an EPA enforcement officer or EPA authorized representative reasonable assistance (as defined in §91.505); or

(6) The engine manufacturer fails to initiate, perform or submit required data generated from the production line and in-use testing programs to EPA.

(c) If any manufacturer knowingly commits an infraction specified in paragraph (b)(1), (b)(4), or (b)(6) of this section or knowingly commits any other fraudulent act which results in the issuance of a certificate of conformity, or fails to comply with the conditions specified in §§ 91.203(f), 91.206(d), 91.208(c) or 91.209(g), the Administrator may void such certificate *ab initio*.

(d) When the Administrator denies, revokes, or voids *ab initio* a certificate of conformity, the engine manufacturer will be provided a written determination. The manufacturer may request a hearing on the Administrator's decision.

(e) Any revocation of a certificate of conformity extends no further than to forbid the introduction into commerce of those engines previously covered by the certificate which are still in the possession of the engine manufacturer, except in cases of such fraud or other misconduct that makes the certificate void *ab initio*.

§ 91.124 Request for hearing.

(a) An engine manufacturer may request a hearing on the Administrator's denial or revocation or voiding *ab initio* of a certificate of conformity.

(b) The engine manufacturer's request must be filed within 30 days of the Administrator's decision, be in writing, and set forth the manufacturer's objections to the Administrator's decision and data to support the objections.

(c) If, after review of the request and supporting data, the Administrator finds that the request raises a substantial and factual issue, the Administrator will grant the engine manufacturer's request for a hearing.

§ 91.125 Hearing procedures.

The hearing procedures set forth in §§ 91.513, 91.514, and 91.515 apply to this subpart.

§ 91.126 Right of entry and access.

Any engine manufacturer who has applied for certification of a new engine or engine family subject to certification testing under this subpart must admit or cause to be admitted to any applicable facilities during operating hours any EPA enforcement officer or EPA authorized representative as provided in § 91.505.

Subpart C—Averaging, Banking, and Trading Provisions

§ 91.201 Applicability.

The requirements of this subpart C are applicable to all marine spark-ignition engines subject to the provisions of subpart A of this part 91.

§ 91.202 Definitions.

The definitions in subpart A of this part apply to this subpart. The following definitions also apply to this subpart:

Averaging for marine SI engines means the exchange of emission credits among engine families within a given manufacturer's product line.

Banking means the retention of marine SI engine emission credits by the manufacturer generating the emission credits for use in future model year averaging or trading as permitted by these regulations.

Eligible sales means marine SI engines sold for purposes of being used in the United States and include any engine introduced into commerce in the U.S. to be sold for use in the U.S.

Emission credits represent the amount of emission reduction or exceedance, by a marine SI engine family, below or above the applicable emission standard, respectively. Emission reductions below the standard are considered as ''positive credits,'' while emission exceedances above the standard are considered as ''negative credits.'' In addition, ''projected credits'' refer to emission credits based on the projected applicable production/sales volume of the engine family. ''Reserved credits'' are emission credits generated within a model year waiting to be reported to EPA at the end of the model year. ''Actual credits'' refer to emission

credits based on actual applicable production/sales volume as contained in the end-of-year reports submitted to EPA. Some or all of these credits may be revoked if EPA review of the end-of-year reports or any subsequent audit action(s) uncovers problems or errors.

Point of first retail sale means the point at which the engine is first sold directly to an end user. Generally, this point is the retail boat or engine dealer. If the engine is sold first to a boat or vessel manufacturer for installation in a boat or vessel, the boat or vessel manufacturer may be the point of first retail sale if the boat or vessel manufacturer can determine if the engine is or is not exported once they have sold the boat or vessel. If the boat or vessel manufacturer cannot determine if the engine is or is not exported once they have sold the boat or vessel, the engine is presumed to not be exported, unless the engine manufacturer can demonstrate otherwise. Engine manufacturers must include engines in their average if the engine is exported and subsequently imported into the United States installed in a boat or vessel and introduced into United States commerce.

Trading means the exchange of marine engine emission credits between manufacturers.

§ 91.203 General provisions.

(a) The certification averaging, banking, and trading provisions for hydrocarbon plus oxides of nitrogen emissions from eligible marine SI engines are described in this subpart.

(b) A marine SI engine family must use the averaging provisions and may use the banking and trading provisions for hydrocarbon plus oxides of nitrogen emissions if it is subject to regulation under subpart B of this part with certain exceptions specified in paragraph (c) of this section.

(c) Manufacturers of marine SI engines may not use the banking and trading provisions for new marine SI engines:

(1) Which are exported, or

(2) Which are subject to state engine emission standards unless the manufacturer demonstrates to the Administrator that inclusion of these engines in banking and trading is appropriate.

(d) A manufacturer may certify marine SI engine families at Family Emission Limits (FELs) above or below the applicable emission standard, provided the summation of the manufacturer's projected balance of all credit transactions in a given model year is greater than or equal to zero, as determined under § 91.207.

(1) A manufacturer of an engine family with an FEL exceeding the applicable emission standard must obtain positive emission credits sufficient to address the associated credit shortfall via averaging, banking, or trading.

(2) An engine family with an FEL below the applicable emission standard may generate positive emission credits for averaging, banking, or trading, or a combination thereof. Emission credits may not be used to offset an engine family's emissions that exceed its applicable FEL. Credits may not be used to remedy nonconformity determined by a production line testing, a Selective Enforcement Audit (SEA) or by recall (in-use) testing. However, in the case of a manufacturer production line testing or SEA failure, credits may be used to allow subsequent production of engines for the family in question if the manufacturer elects to recertify to a higher FEL. In the case of production line testing a manufacturer may revise the FEL based upon production line testing results obtained under subpart F and upon Administrator approval pursuant to § 91.122(d).

(e) Credits generated in a given model year may be used in the following three model years. Credits not used by the end of the third model year after being generated are forfeited. Credits generated in one model year may not be used for prior model years, unless allowed under § 91.207.

(f) Manufacturers must demonstrate compliance under the averaging, banking, and trading provisions for a particular model year by 270 days after the model year. An engine family generating negative credits for which the manufacturer does not obtain or generate an adequate number of positive credits from the same or previous model years will violate the conditions of the certificate of conformity. The

certificate of conformity may be voided *ab initio* pursuant to § 91.123 for this engine family.

§ 91.204 Averaging.

(a) Negative credits from engine families with FELs above the applicable emission standard must be offset by positive credits from engine families below the applicable emission standard, as allowed under the provisions of this subpart. Averaging of credits in this manner is used to determine compliance under § 91.207(b).

(b) For model years through 2000, outboard credits may not be summed with personal watercraft credits, or vice versa, for purposes of compliance under § 91.207, except manufacturers may, at their discretion, include personal watercraft credits with outboard credits upon demonstration to the satisfaction of the Administrator that the personal watercraft engine is installed in a hybrid vessel that is smaller than a typical sterndrive or inboard vessel and larger than a typical personal watercraft. For model year 2001 and later, manufacturers must sum credits generated from outboard and personal watercraft to determine compliance under § 91.207.

(c) Credits used in averaging may be obtained from credits generated by another engine family as allowed under § 91.204(b), in the same model year, credits banked in the three previous model years, or credits obtained through trading.

§ 91.205 Banking.

(a) A manufacturer of a marine SI engine family with an FEL below the applicable emission standard for a given model year may bank credits in that model year for use in averaging and trading in the following three model years. Negative credits must be banked according to the requirements under § 91.207(c). Positive credits not used within the three model years after they are banked are forfeited.

(1) Early banking. (i) For outboard engines in model year (MY) 1997, a manufacturer may bank positive emission credits if the following conditions are met: the manufacturer certifies their entire marine outboard engine product line for MY 1997 under the emission standards applicable to MY 1998, the manufacturer demonstrates compliance with the corporate average standard under § 91.207(b), and the sum of positive and negative credits under § 91.207 generates positive emission credits, when the following formula is used for purposes of the applicable standard in § 91.207(a). The number of credits that may be banked under this paragraph is the number of positive emission credits generated under the provisions of the preceding sentence. Marine engines certified under the provisions of this paragraph are subject to all of the requirements of this part.

HYDROCARBON PLUS OXIDES OF NITROGEN EXHAUST EMISSION STANDARDS

[Grams per kilowatt-hour]

Model year	P<4.3 kW $HC+NO_X$ Emission standard by model year	P>4.3 kW $HC+NO_X$ emission standard by model year
1997 ...	276	$(0.959 \times (151 + 557/P^{0.9})+1.22)$

(ii) For personal watercraft engines in model year 1998, a manufacturer may bank positive emission credits if the following conditions are met: The manufacturer certifies their entire marine personal watercraft engine product line for MY 1998 under the emission standards applicable to 1998 model year outboard engine emission standards, the manufacturer demonstrates compliance with the corporate average standard under § 91.207(b), and the sum of positive and negative credits under § 91.207 generates positive emission credits, when the following formula is used for purposes of the applicable standard § 91.207(a). The number of credits that may be banked under this paragraph is the number of positive emission credits generated under the provisions of the preceding sentence. Marine engines certified under the provisions of this paragraph are subject to all of the requirements of this part.

HYDROCARBON PLUS OXIDES OF NITROGEN EXHAUST EMISSION STANDARDS

[Grams per kilowatt-hour]

Model year	P<4.3 kW $HC+NO_X$ emission standard by model year	P> 4.3 kW $HC+NO_X$ emission standard by model year
1998 ...	276	$(0.959 \times (151 + 557/P^{0.9})) + 1.22)$

(iii) For personal watercraft in model year 1997, a manufacturer may bank positive emission credits if the following conditions are met: the manufacturer certifies their entire marine personal watercraft engine product line for MY 1997 under the emission standards specified in the formula below for PWC, the manufacturer demonstrates compliance with the corporate average standard under § 91.207(b), and the sum of positive and negative credits under § 91.207 generates positive emission credits, when the following formula is used for purposes of the applicable standard in § 91.207(a). The number of credits that may be banked under this paragraph is the number of positive emission credits generated under the provisions of the preceding sentence. Marine engines certified under the provisions of this paragraph are subject to all of the requirements of this part.

HYDROCARBON PLUS OXIDES OF NITROGEN EXHAUST EMISSION STANDARDS

[Grams per kilowatt-hour]

Model year	P<4.3 kW $HC+NO_X$ emission standard by model year	P> 4.3 kW $HC+NO_X$ emission standard by model year
1997 ...	276	$(0.959 \times (151 + 557/P^{0.9}) + 1.22)$

(b) A manufacturer may bank actual credits only after the end of the model year and after EPA has reviewed the manufacturer's end-of-year reports. During the model year and before submittal of the end-of-year report, credits originally designated in the certification process for banking will be considered reserved and may be redesignated for trading or averaging in the end-of-year report and final report.

(c) Credits declared for banking from the previous model year that have not been reviewed by EPA may be used in averaging or trading transactions. However, such credits may be revoked at a later time following EPA review of the end-of-year report or any subsequent audit actions.

§ 91.206 Trading.

(a) A marine SI engine manufacturer may exchange emission credits with other marine SI engine manufacturers in trading. These credits must be used in the same averaging set as generated.

(b) Credits for trading can be obtained from credits banked in the three previous model years or credits generated during the model year of the trading transaction. Traded credits expire if they are not used in averaging within three model years following the model year in which they were generated.

(c) Traded credits can be used for averaging, banking, or further trading transactions.

(d) In the event of a negative credit balance resulting from a transaction, both the buyer and the seller are liable, except in cases involving fraud. Certificates of all engine families participating in a negative trade may be voided *ab initio* pursuant to § 91.123.

§ 91.207 Credit calculation and manufacturer compliance with emission standards.

(a) For each engine family, certification emission credits (positive or negative) are to be calculated according to the following equation and rounded, in accordance with ASTM E29–93a, to the nearest gram. ASTM E29–93a has been incorporated by reference. See § 91.6. Consistent units are to be used throughout the equation. The following equation is used to determine hydrocarbon plus oxides of nitrogen credit status for an engine family, whether generating positive credits or negative credits:

$$\sum_{t=1}^{\text{max actual life}} \frac{S(t) \times \text{sales} \times (\text{std} - \text{fel}) \times \text{Power} \times 0.207 \times \mu_{\text{use}}}{1.03^{t}}$$

Where:

sales = the number of eligible sales tracked to the point of first retail sale for the given engine family during the model year. Annual production projections are used to project credit availability for initial certification. Actual sales volume is used in determining actual credits for end of-year compliance determination.

t = time in model years

Power = the average power of an engine family in kW (sales weighted). The power of each configuration is the rated output in kilowatts as determined by SAE J1228. This procedure has been incorporated by reference. See § 91.6.

max actual life = maximum actual life specific to the power rating and the application; max actual life = $2\mu_{life}$

μ_{life} = average actual life in years, specific to the power rating and the application as given below.

Engine type	(μ_{life})
Outboard	$41.27 \times \left(\frac{\text{Power}}{0.746}\right)^{-0.204}$
Personal Watercraft	10

Power = as defined above.

μ_{use} = mean use in hours per year. For outboard engines,

μ_{use} = 34.8 hrs /yr. For personal watercraft, μ_{use} = 77.3 hrs/yr;

S(t) = cumulative fraction survived at time t;

$S(t) = \exp -(0.906 \times t/\mu_{life})^4$

STD = the current and applicable marine SI engine emission standard in grams per kilowatt hour as determined in § 91.104.

FEL = the family emission limit for the engine family in grams per kilowatt hour.

(b) Manufacturer compliance with the corporate average emission standard is determined on a corporate average basis at the end of each model year. A manufacturer is in compliance when the sum of positive and negative emission credits it holds is greater than or equal to zero, except as allowed under paragraph (c) of this section.

(c)(1) Outboard Engines

(i) For model year 1998, a manufacturer is in compliance when the sum of positive credits and negative emission credits it holds is greater than or equal to zero, including

(A) Credits generated in MY 1998 exceed 70% of the negative credits generated in MY 1998. The remaining negative credits (up to 30% of the total negative credits) must be banked.

(ii) For model year 1999, a manufacturer is in compliance when the positive credits generated in MY 1999 exceed the sum of 80% of the negative credits generated in MY 1999 and the negative credits banked in 1998. The remaining negative credits (up to 20% of the total negative credits) must be banked.

(iii) For model year 2000, a manufacturer is in compliance when the sum of positive and negative emission credits it holds is greater than or equal to zero, including

(A) The negative credits banked in MY 1998 and MY 1999 and

(B) Any adjustments to credits based on adjustments to FELs resulting from requirements in § 91.118(h)(1)(i). Manufacturers do not have to recalculate compliance for model years 1998 and 1999.

(2) Personal watercraft engines. (i) For model year 1999, a manufacturer is in compliance when the positive credits generated in MY 1999 exceed 50% of the negative credits generated in MY 1999. The remaining negative credits (up to 50% of the total negative credits) must be banked.

(ii) For model year 2000, a manufacturer is in compliance when the sum of positive and negative emission credits it holds is greater than or equal to zero, including

(A) The negative credits banked in 1999 and

(B) Any adjustments to credits based on adjustments to FELs resulting from requirements in § 91.118(h)(1)(i). Manufacturers do not have to recalculate compliance for model year 1999.

(d) When a manufacturer is not in compliance, the manufacturer will be in violation of these regulations and EPA may void *ab initio* the certificates of engine families for which the manufacturer has not obtained sufficient positive emission credits pursuant to §91.123.

(e) Notwithstanding other provisions of this part, for model years beginning with model year 2000, a manufacturer having a negative credit balance during one period of up to four consecutive model years will not be considered to be in noncompliance in a model year up through and including model year 2009 where:

(1) The manufacturer has a total annual production of engines subject to regulation under this part of 1000 or less; and

(2) The manufacturer has not had a negative credit balance other than in three immediately preceding model years, except as permitted under paragraph (c) of this section; and

(3) The FEL(s) of the family or families produced by the manufacturer are no higher than those of the corresponding family or families in the previous model year, except as allowed by the Administrator; and

(4) The manufacturer submits a plan acceptable to the Administrator for coming into compliance with future model year standards including projected dates for the introduction or increased sales of engine families having FEL(s) below standard and projected dates for discontinuing or reducing sales of engines having FEL(s) above standard; and

(5)(i) The manufacturer has set its FEL using emission testing as prescribed in subpart E of this part; or

(ii) The manufacturer has set its FEL based on the equation and provisions of §91.118(h)(1)(i) and the manufacturer has submitted appropriate test data and revised its FEL(s) and recalculated its credits pursuant to the provisions of §91.118(h)(1); or

(iii) The manufacturer has set its FEL using good engineering judgement, pursuant to the provisions of §91.118(h)(1)(ii) and (h)(2).

[64 FR 15239, Mar. 30, 1999, as amended at 65 FR 24314, Apr. 25, 2000; 70 FR 40451, July 13, 2005]

§91.208 Certification.

(a) In the application for certification a manufacturer must:

(1) Submit a statement that the engines for which certification is requested will not, to the best of the manufacturer's belief, cause the manufacturer to be in noncompliance under §91.207(b) when all credits are calculated for all the manufacturer's engine families.

(2) Declare an FEL for each engine family for HC plus NO_X. The FEL must have the same number of significant digits as the emission standard.

(3) Indicate the projected number of credits generated/needed for this family; the projected applicable production/sales volume, by quarter; and the values required to calculate credits as given in §91.207.

(4) Submit calculations in accordance with §91.207 of projected emission credits (positive or negative) based on quarterly production projections for each family.

(5)(i) If the engine family is projected to have negative emission credits, state specifically the source (manufacturer/engine family or reserved) of the credits necessary to offset the credit deficit according to quarterly projected production.

(ii) If the engine family is projected to generate credits, state specifically (manufacturer/engine family or reserved) where the quarterly projected credits will be applied.

(b) All certificates issued are conditional upon manufacturer compliance with the provisions of this subpart both during and after the model year of production.

(c) Failure to comply with all provisions of this subpart will be considered to be a failure to satisfy the conditions upon which the certificate was issued, and the certificate may be deemed void *ab initio* pursuant to §91.123.

(d) The manufacturer bears the burden of establishing to the satisfaction of the Administrator that the conditions upon which the certificate was issued were satisfied or waived.

(e) Projected credits based on information supplied in the certification application may be used to obtain a certificate of conformity. However, any such credits may be revoked based on

review of end-of-year reports, follow-up audits, and any other verification steps deemed appropriate by the Administrator.

§ 91.209 Maintenance of records.

(a) The manufacturer must establish, maintain, and retain the following adequately organized and indexed records for each engine produced:

(1) EPA engine family,

(2) Engine identification number,

(3) Engine model year and build date,

(4) Power rating,

(5) Purchaser and destination, and

(6) Assembly plant.

(b) The manufacturer must establish, maintain, and retain the following adequately organized and indexed records for each engine family:

(1) EPA engine family identification code,

(2) Family Emission Limit (FEL) or FELs where FEL changes have been implemented during the model year,

(3) Power rating for each configuration tested,

(4) Projected sales volume for the model year, and

(5) Actual sales volume for the model year for each FEL where FEL changes have been implemented during the model year.

(c) Any manufacturer producing an engine family participating in trading reserved credits must maintain the following records on a quarterly basis for each such engine family:

(1) The engine family,

(2) The actual quarterly and cumulative applicable production/sales volume,

(3) The values required to calculate credits as given in § 91.207,

(4) The resulting type and number of credits generated/required,

(5) How and where credit surpluses are dispersed, and

(6) How and through what means credit deficits are met.

(d) The manufacturer must retain all records required to be maintained under this section for a period of eight years from the due date for the end-of-model year report. Records may be retained as hard copy or reduced to microfilm, ADP diskettes, and so forth, depending on the manufacturer's record retention procedure; provided, that in every case all information contained in the hard copy is retained.

(e) Nothing in this section limits the Administrator's discretion in requiring the manufacturer to retain additional records or submit information not specifically required by this section.

(f) Pursuant to a request made by the Administrator, the manufacturer must submit to the Administrator the information that the manufacturer is required to retain.

(g) EPA may void *ab initio* a certificate of conformity for an engine family for which the manufacturer fails to retain the records required in this section or to provide such information to the Administrator upon request pursuant to § 91.123.

§ 91.210 End-of-year and final reports.

(a) End-of-year and final reports must indicate the engine family, the actual sales volume, the values required to calculate credits as given in § 91.207, and the number of credits generated/required. Manufacturers must also submit how and where credit surpluses were dispersed (or are to be banked) and/or how and through what means credit deficits were met. Copies of contracts related to credit trading must be included or supplied by the broker, if applicable. The report must include a calculation of credit balances to show that the credit summation is equal to or greater than zero.

(b) The sales volume for end-of-year and final reports must be based on the location of the point of first retail sale (for example, retail customer or dealer) also called the final product purchase location.

(c)(1) End-of-year reports must be submitted within 90 days of the end of the model year to: Manager, Engine Compliance Programs Group (6403–J), US Environmental Protection Agency, 1200 Pennsylvania Ave., NW., Washington, DC 20460.

(2) Final reports must be submitted within 270 days of the end of the model year to: Manager, Engine Compliance Programs Group (6403–J), U.S. Environmental Protection Agency, 1200 Pennsylvania Ave., NW., Washington, DC 20460.

(d) Failure by a manufacturer to submit any end-of-year or final reports in

the specified time for all engines is a violation of §91.1103(a)(2) and section 213(d) of the Clean Air Act for each engine.

(e) A manufacturer generating credits for banking only who fails to submit end-of-year reports in the applicable specified time period (90 days after the end of the model year) may not use the credits until such reports are received and reviewed by EPA. Use of projected credits pending EPA review is not permitted in these circumstances.

(f) Errors discovered by EPA or the manufacturer in the end-of-year report, including errors in credit calculation, may be corrected in the final report up to 270 days from the end of the model year.

(g) If EPA or the manufacturer determines that a reporting error occurred on an end-of-year or final report previously submitted to EPA under this section, the manufacturer's credits and credit calculations must be recalculated. Erroneous positive credits will be void except as provided in paragraph (h) of this section. Erroneous negative credit balances may be adjusted by EPA.

(h) If within 270 days of the end of the model year, EPA review determines a reporting error in the manufacturer's favor (that is, resulting in an increased credit balance) or if the manufacturer discovers such an error within 270 days of the end of the model year, EPA shall restore the credits for use by the manufacturer.

§91.211 Notice of opportunity for hearing.

Any voiding of the certificate under §§91.203(f), 91.206(d), 91.207(d), 91.208(c), or §91.209(g) shall be made only after the manufacturer concerned is offered an opportunity for a hearing conducted in accordance with §§91.512, 91.513 and 91.514 and, if a manufacturer requests such a hearing, will be made only after an initial decision by the Presiding Officer.

Subpart D—Emission Test Equipment Provisions

§91.301 Scope; applicability.

(a) This subpart describes the equipment required in order to perform exhaust emission tests on new marine gasoline-fueled spark-ignition propulsion engines subject to the provisions of subpart A of this part 91.

(b) Exhaust gases are sampled while the test engine is operated using a steady state test cycle on an engine dynamometer. Exhaust gas sampling may be performed using either the raw gas sampling method or the constant volume sampling (CVS) method. The exhaust gases receive specific component analysis determining concentration of pollutant, exhaust volume, the fuel flow, and the power output during each mode. Emissions are reported on a gram per brake-kilowatt hour (g/kW-hr). See subpart E of this part for a complete description of the test procedure.

(c) Additional information about system design, calibration methodologies, and so forth, for raw gas sampling can be found in 40 CFR part 1065. Examples for system design, calibration methodologies, and so forth, for dilute sampling can be found in 40 CFR part 1065.

[61 FR 52102, Oct. 4, 1996, as amended at 70 FR 40451, July 13, 2005]

§91.302 Definitions.

The definitions in §91.3 apply to this subpart.

§91.303 Acronyms and abbreviations.

(a) The acronyms and abbreviations in §91.5 apply to this subpart.

(b) The symbols in Table 1 in appendix A of this subpart apply to this subpart.

§91.304 Test equipment overview.

(a) All engines subject to this subpart are tested for exhaust emissions. Engines are operated on dynamometers meeting the specification given in §91.305.

(b) The exhaust is tested for gaseous emissions using either a constant volume sampling (CVS) system as described in §91.414, or using the raw gas sampling system as described in

§ 91.421. Both systems require analyzers (see paragraph (c) of this section) specific to the pollutant being measured.

(c) Analyzers used are a non-dispersive infrared detector (NDIR) absorption type for carbon monoxide and carbon dioxide analysis; paramagnetic detector (PMD), zirconia (ZRDO), or electrochemical type (ECS) for oxygen analysis; a flame ionization detector (FID) or heated flame ionization detector (HFID) type for hydrocarbon analysis; and a chemiluminescent detector (CLD) or heated chemiluminescent detector (HCLD) for oxides of nitrogen analysis.

§ 91.305 Dynamometer specifications and calibration accuracy.

(a) *Dynamometer specifications.* (1) The dynamometer test stand and other instruments for measurement of engine speed and torque must meet the accuracy requirements shown in Table 2 in appendix A to this subpart. The dynamometer must be capable of performing the test cycle described in § 91.410.

(b) *Dynamometer calibration accuracy.* (1) The dynamometer test stand and other instruments for measurement of engine torque and speed must meet the calibration frequency shown in Table 2 in appendix to this subpart.

(2) A minimum of three calibration weights for each range used is required. The weights must be equally spaced and traceable to within 0.5 percent of National Institute of Standards and Testing (NIST) weights. Laboratories located in foreign countries may certify calibration weights to local government bureau standards.

§ 91.306 Dynamometer torque cell calibration.

(a)(1) Any lever arm used to convert a weight or a force through a distance into a torque must be used in a horizontal position for horizontal shaft dynamometers (±five degrees). For vertical shaft dynamometers, a pulley system may be used to convert the dynamometer's horizontal loading into the vertical plane.

(2) Calculate the indicated torque (IT) for each calibration weight to be used by:

IT=Moment Arm (meters)×Calibration Weight (Newtons)

(3) Attach each calibration weight specified in § 91.305(b)(2) to the moment arm at the calibration distance determined in paragraph (a)(2) of this section. Record the power measurement equipment response (N-m) to each weight.

(4) Compare the torque value measured to the calculated torque.

(5) The measured torque must be within two percent of the calculated torque.

(6) If the measured torque is not within two percent of the calculated torque, adjust or repair the system. Repeat steps in paragraphs (a)(1) through (a)(6) of this section with the adjusted or repaired system.

(b) Option. A master load-cell or transfer standard may be used to verify the torque measurement system.

(1) The master load-cell and read out system must be calibrated with weights specified in § 91.305(b)(2).

(2) Attach the master load-cell and loading system.

(3) Load the dynamometer to a minimum of three equally spaced torque values as indicated by the master load-cell for each in-use range used.

(4) The in-use torque measurement must be within two percent of the torque measured by the master system for each load used.

(5) If the in-use torque is not within two percent of the master torque, adjust or repair the system. Repeat steps in paragraphs (b)(2) through (b)(4) of this section with the adjusted or repaired system.

(c) Calibrated resistors may not be used for dynamometer torque transducer calibration, but may be used to span the transducer prior to engine testing.

(d) Other engine dynamometer system calibrations such as speed are performed as specified by the dynamometer manufacturer or as dictated by good engineering practice.

§ 91.307 Engine cooling system.

An engine cooling system is required with sufficient capacity to maintain the engine at normal operating temperatures as prescribed by the engine manufacturer. Auxiliary fan(s) may be

used to maintain sufficient engine cooling during dynamometer operation.

§91.308 Lubricating oil and test fuel.

(a) *Lubricating oil.* (1) Use the engine lubricating oil which meets the marine engine manufacturer's requirements for a particular engine and intended usage. Record the specifications of the lubricating oil used for the test.

(2) For two-stroke engines, the fuel/oil mixture ratio must be that which is recommended by the manufacturer. If the flow rate of the oil in the engine is greater than two percent of the fuel flow rate, then the oil supplied to the engine must be added to the fuel flow in the emission calculations described in §91.419 and §91.426. Good engineering judgment may be used to estimate oil flow when oil injection is used.

(b) *Test fuels—certification.* The manufacturer must use gasoline having the specifications or substantially equivalent specifications approved by the Administrator, as specified in Table 3 in appendix A of this subpart for exhaust emission testing of gasoline fueled engines. The specification range of the fuel to be used under this paragraph must be reported in accordance with §91.109(d).

(c) *Test fuels—service accumulation.* (1) Unleaded gasoline representative of commercial gasoline which will be generally available through retail outlets must be used in service accumulation for gasoline-fueled marine engines. As an alternative, the certification test fuels specified under paragraph (b) of this section for engine service accumulation. Leaded fuel may not be used during service accumulation.

(2) The octane rating of the gasoline used may not be higher than 4.0 research octane numbers above the minimum recommended by the manufacturer and have a minimum sensitivity of 7.5 octane numbers, where sensitivity is defined as research octane number minus motor octane number.

(d) Other fuels may be used for testing provided:

(1) They are commercially viable,

(2) Information, acceptable to the Administrator, is provided to show that only the designated fuel would be used in customer service,

(3) Use of a fuel listed under paragraph (b) of this section would have a detrimental effect on emissions or durability; and

(4) The Administrator provides written approval of the fuel specifications prior to the start of testing.

§91.309 Engine intake air temperature measurement.

(a) Engine intake air temperature measurement must be made within 100 cm of the air-intake of the engine. The measurement location must be either in the supply system or in the air stream entering the engine.

(b) The temperature measurements must be accurate to within ±2 °C.

§91.310 Engine intake air humidity measurement.

This section refers to engines which are supplied with intake air other than the ambient air in the test cell (i.e., air which has been pumbed directly to the engine air intake system). For engines which use ambient test cell air for the engine intake air, the ambient testcell humidity measurement may be used.

(a) *Humidity conditioned air supply.* Air that has had its absolute humidity altered is considered humidity-conditioned air. For this type of intake air supply, the humidity measurements must be made within the intake air supply system, and after the humidity conditioning has taken place.

(b) *Unconditioned air supply.* Humidity measurements in unconditioned intake air supply must be made in the intake air stream entering the engine. Alternatively, the humidity measurements can be measured within the intake air stream entering the supply system.

§91.311 Test conditions.

(a) *General requirements.* (1) Ambient temperature levels encountered by the test engine throughout the test sequence may not be less than 20 °C nor more than 30 °C.

(2) Calculate all volumes and volumetric flow rates at standard conditions for temperature and pressure. Use these conditions consistently throughout all calculations. Standard conditions for temperature and pressure are 25 °C and 101.3 kPa.

(b) *Engine test conditions*. Measure the absolute temperature (designated as T and expressed in Kelvin) of the engine air at the inlet to the engine and the dry atmospheric pressure (designated as p_s and expressed in kPa. Determine the parameter *f* according to the following provisions:

(1) Naturally aspirated and mechanically supercharged engines:

$$f = \frac{99}{p_s} \times \left(\frac{T}{298}\right)^{0.7}$$

(2) Turbocharged engine with or without cooling of inlet air:

$$f = \left(\frac{99}{p_s}\right)^{0.7} \times \left(\frac{T}{298}\right)^{1.5}$$

(3) For a test to be recognized as valid, the parameter *f* must be between the limits as shown below:

$$0.96 < f < 1.04$$

§ 91.312 Analytical gases.

(a) The shelf life of a calibration gas may not be exceeded. Record the expiration date stated by the gas supplier for each calibration gas.

(b) *Pure gases*. The required purity of the gases is defined by the contamination limits given in parenthesis. The following gases must be available for operation.

(1) Purified nitrogen, also referred to as ''zero-grade nitrogen'' (Contamination≤1 ppm C, ≤1 ppm CO, ≤400 ppm CO_2, ≤0.1 ppm NO)

(2) Purified oxygen (Purity 99.5 percent vol O_2)

(3) Hydrogen-helium mixture (40±2 percent hydrogen, balance helium) (Contamination≤1 ppm C, ≤400 ppm CO)

(4) Purified synthetic air, also referred to as ''zero gas'' (Contamination≤1 ppm C, ≤1 ppm CO, ≤400 ppm CO_2, ≤0.1 ppm NO) (Oxygen content between 18–21 percent vol.)

(c) *Calibration and span gases*. (1) Calibration gas values are to be derived from NIST ''Standard Reference Materials'' (SRM's) or other local gas standards and are to be single blends as specified in this subsection.

(2) Mixtures of gases having the following chemical compositions must be available:

C_3H_8 and purified synthetic air (dilute measurements); C_3H_8 and purified nitrogen (raw measurements);
CO and purified nitrogen;
NO_X and purified nitrogen (the amount of NO_2 contained in this calibration gas must not exceed five percent of the NO content);
CO_2 and purified nitrogen.

NOTE: For the HFID or FID, the manufacturer may choose to use as a diluent span gas and the calibration gas either purified synthetic air or purified nitrogen. Any mixture of C_3H_8 and purified synthetic air which contains a concentration of propane higher than what a gas supplier considers to be safe may be substituted with a mixture of C_3H_8 and purified nitrogen. However, the manufacturer must be consistent in the choice of diluent (zero air or purified nitrogen) between the calibration and span gases. If a manufacturer chooses to use C_3H_8 and purified nitrogen for the calibration gases, then purified nitrogen must be the diluent for the span gases.

(3) The true concentration of a span gas must be within ±2 percent of the NIST gas standard. The true concentration of a calibration gas must be within ±1 percent of the NIST gas standard. The use of precision blending devices (gas dividers) to obtain the required calibration gas concentrations is acceptable. Give all concentrations of calibration gas on a volume basis (volume percent or volume ppm).

(4) The gas concentrations used for calibration and span may also be obtained by means of a gas divider, diluting with purified N_2 or with purified synthetic air. The accuracy of the mixing device must be such that the concentration of the diluted gases may be determined to within ±2 percent.

(d) Oxygen interference check gases must contain propane with 350 ppmC ±75 ppmC hydrocarbon. Determine the concentration value to calibration gas tolerances by chromatographic analysis of total hydrocarbons plus impurities or by dynamic blending. Use nitrogen as the predominant diluent with the balance oxygen.

(e) Fuel for the hydrocarbon flame ionization detector (HC-FID) must be a blend of 40±2 percent hydrogen with the balance being helium. The mixture

shall contain less than one ppm equivalent carbon response; 98 to 100 percent hydrogen fuel may be used with advance approval of the Administrator.

(f) *Hydrocarbon analyzer burner air.* The concentration of oxygen must be within one mole percent of the oxygen concentration of the burner air used in the latest oxygen interference check (percent O_2 I), see §91.316(d). If the difference in oxygen concentration is greater than one mole percent, then the oxygen interference must be checked and the analyzer adjusted if necessary, to meet the percent O_2 I requirements. The burner air must contain less than two ppmC hydrocarbon.

§91.313 Analyzers required.

(a) *Analyzers.* Analyze measured gases with the following instruments:

(1) *Carbon monoxide (CO) analysis.* (i) The carbon monoxide analyzer must be of the non-dispersive infrared (NDIR) absorption type.

(ii) The use of linearizing circuits is permitted.

(2) *Carbon dioxide (CO_2) analysis.* (i) The carbon dioxide analyzer must be of the non-dispersive infrared (NDIR) absorption type.

(ii) The use of linearizing circuits is permitted.

(3) *Oxygen (O_2) analysis.* Oxygen (O_2) analyzers may be of the paramagnetic (PMD), zirconia (ZRDO) or electrochemical type (ECS).

(4) *Hydrocarbon (HC) analysis.* (i) For Raw Gas Sampling, the hydrocarbon analyzer must be of the heated flame ionization (HFID) type. For constant volume sampling, the hydrocarbon analyzer may be of the flame ionization (FID) type or of the heated flame ionization (HFID) type.

(ii) For the HFID system, if the temperature of the exhaust gas at the sample probe is below 190 °C, the temperature of the valves, pipe work, and so forth, must be controlled so as to maintain a wall temperature of 190 ±11 °C. If the temperature of the exhaust gas at the sample probe is above 190 °C, the temperature of the valves, pipe work, and so forth, must be controlled so as to maintain a wall temperature greater than 180 °C.

(iii) For the HFID analyzer, the detector, oven, and sample-handling components within the oven must be suitable for continuous operation at temperatures to 200 °C. It must by capable of maintaining temperature within ±5.5 °C of the set point.

(iv) Fuel and burner air must conform to the specifications in §91.312.

(v) The percent of oxygen interference must be less than three percent, as specified in §91.316(d).

(5) *Oxides of nitrogen (NO_X) analysis.* (i) This analysis device consists of the following items:

(A) A NO_2 to NO converter. The NO_2 to NO converter efficiency must be at least 90 percent.

(B) An ice bath located after the NO_X converter (optional).

(C) A chemiluminescent detector (CLD) or heated chemiluminescent detector (HCLD).

(ii) The quench interference must be less than three percent as measured in §91.325.

(b) Other gas analyzers yielding equivalent results may be used with advance approval of the Administrator.

(c) The following requirements must be incorporated as indicated in systems used for testing under this subpart.

(1) Carbon monoxide and carbon dioxide measurements must be made on a dry basis (for raw exhaust measurement only). Specific requirements for the means of drying the sample can be found in §91.313(e).

(2) Calibration or span gases for the NO_X measurement system must pass through the NO_2 to NO converter.

(d) The electromagnetic compatibility (EMC) of the equipment must be on a level as to minimize additional errors.

(e) Gas drying. Chemical dryers are not an acceptable method of removing water from the sample. Water removal by condensation is acceptable. If water is removed by condensation, the sample gas temperature or sample dew point must be monitored either within the water trap or downstream and its temperature must not exceed 7 °C. A water trap performing this function is an acceptable method. Means other than condensation may be used only with prior approval from the Administrator.

§ 91.314 Analyzer accuracy and specifications.

(a) *Measurement accuracy—general.* The analyzers must have a measuring range which allows them to measure the concentrations of the exhaust gas sample pollutants with the accuracies shown in Table 2 in appendix A to this subpart.

(1) *Precision.* The precision of the analyzer must be, at worst, ±1 percent of full-scale concentration for each range used. The precision is defined as 2.5 times the standard deviation(s) of 10 repetitive responses to a given calibration or span gas.

(2) *Noise.* The analyzer peak-to-peak response to zero and calibration or span gases over any 10-second period may not exceed two percent of full-scale chart deflection on all ranges used.

(3) *Zero drift.* The analyzer zero-response drift during a one-hour period must be less than two percent of full-scale chart deflection on the lowest range used. The zero-response is defined as the mean response including noise to a zero-gas during a 30-second time interval.

(4) *Span drift.* The analyzer span drift during a one-hour period must be less than two percent of full-scale chart deflection on the lowest range used. The analyzer span is defined as the difference between the span-response and the zero-response. The span-response is defined as the mean response including noise to a span gas during a 30-second time interval.

(b) *Operating procedure for analyzers and sampling system.* Follow the start-up and operating instructions of the instrument manufacturer. Adhere to the minimum requirements given in § 91.316 to § 91.325 and § 91.409.

(c) *Emission measurement accuracy—bag sampling.* (1) Good engineering practice dictates that exhaust emission sample analyzer readings below 15 percent of full scale chart deflection should generally not be used.

(2) Some high resolution read-out systems, such as computers, data loggers, and so forth, can provide sufficient accuracy and resolution below 15 percent of full scale. Such systems may be used provided that additional calibrations are made to ensure the accuracy of the calibration curves. The following procedure for calibration below 15 percent of full scale may be used:

NOTE: If a gas divider is used, the gas divider must conform to the accuracy requirements as follows: The use of precision blending devices (gas dividers) to obtain the required calibration gas concentrations is acceptable, provided that the blended gases are accurate to within ±1.5 percent of NIST gas standards or other gas standards which have been approved by the Administrator. This accuracy implies that primary gases used for blending must be ''named'' to an accuracy of at least ±1 percent, traceable to NIST or other approved gas standards.

(i) Span the full analyzer range using a top range calibration gas. The span gases must be accurate to within ±2 percent of NIST gas standards or other gas standards which have been approved by the Administrator.

(ii) Generate a calibration curve according to, and meeting the requirements of the sections describing analyzer calibrations which are found in §§ 91.316, 91.317, 91.318, and 91.320 of this chapter.

(iii) Select a calibration gas (a span gas may be used for calibrating the CO_2 analyzer) with a concentration between the two lowest non-zero gas divider increments. This gas must be ''named'' to an accuracy of ±2 percent of NIST gas standards, or other standards approved by the Administrator.

(iv) Using the calibration curve fitted to the points generated in paragraphs (c)(2) (i) and (ii) of this section, check the concentration of the gas selected in paragraph (c)(2)(iii) of this section. The concentration derived from the curve must be within ±2.3 percent (±2.8 percent for CO_2 span gas) of the gas' original named concentration.

(v) Provided the requirements of paragraph (c)(2)(iv) of this section are met, use the gas divider with the gas selected in paragraph (c)(2)(iii) of this section and determine the remainder of the calibration points. Fit a calibration curve per §§ 91.316, 91.317, 91.318, and 91.320 of this chapter for the entire analyzer range.

(d) *Emission measurement accuracy—continuous sampling.* Analyzers used for continuous analysis must be operated such that the measured concentration falls between 15 and 100 percent of full scale chart deflection. Exceptions to these limits are:

(1) The analyzer's response may be less than 15 percent or more than 100 percent of full scale if automatic range change circuitry is used and the limits for range changes are between 15 and 100 percent of full scale chart deflection;

(2) The analyzer's response may be less than 15 percent of full scale if:

(i) Alternative in paragraph (c)(2) of this section is used to ensure that the accuracy of the calibration curve is maintained below 15 percent; or

(ii) The full scale value of the range is 155 ppmC or less; or

(iii) The emissions from the engine are erratic and the integrated chart deflection value for the cycle is greater than 15 percent of full scale; or

(iv) The contribution of all data read below the 15 percent level is less than 10 percent by mass of the final test results.

§91.315 Analyzer initial calibration.

(a) *Warming-up time*. Follow the warm-up time according to the recommendations of the manufacturer. If not specified, a minimum of two hours should be allowed for warming up the analyzers.

(b) *NDIR and HFID analyzer*. Tune and maintain the NDIR analyzer per the instrument manufacturer recommendations. The combustion flame of the HFID analyzer must be optimized in order to meet the specifications in §91.316(b).

(c) *Zero setting and calibration*. Using purified synthetic air (or nitrogen), set the CO, CO_2, NO_X and HC analyzers at zero. Connect the appropriate calibrating gases to the analyzers and record the values. The same gas flow rates shall be used as when sampling exhaust.

(d) *Rechecking of zero setting*. Recheck the zero setting and, if necessary, repeat the procedure described in paragraph (c) of this section.

§91.316 Hydrocarbon analyzer calibration.

(a) Calibrate the FID and HFID hydrocarbon analyzer as described in this section. Operate the HFID to a set point ±5.5 °C between 185 and 197 °C.

(b) Initial and periodic optimization of detector response. Prior to introduction into service and at least annually thereafter, adjust the FID and HFID hydrocarbon analyzer for optimum hydrocarbon response as specified by this paragraph. Alternative methods yielding equivalent results may be used, if approved in advance by the Administrator.

(1) Follow good engineering practices for initial instrument start-up and basic operating adjustment using the appropriate fuel (see §91.312) and purified synthetic air or zero-grade nitrogen.

(2) One of the following procedures is required for FID or HFID optimization:

(i) The procedure outlined in Society of Automotive Engineers (SAE) paper No. 770141, ''Optimization of Flame Ionization Detector for Determination of Hydrocarbons in Diluted Automobile Exhaust''; author, Glenn D. Reschke. This procedure has been incorporated by reference. See §91.6.

(ii) The HFID optimization procedures outlined in 40 CFR part 1065, subpart D.

(iii) Alternative procedures may be used if approved in advance by the Administrator.

(3) After the optimum flow rates have been determined, they are recorded for future reference.

(c) Initial and periodic calibration. Prior to introduction into service and monthly thereafter, or within one month prior to the certification test, calibrate the FID or HFID hydrocarbon analyzer on all normally used instrument ranges, using the steps in this paragraph. Use the same flow rate and pressures as when analyzing samples. Introduce calibration gases directly at the analyzer. An optional method for dilute sampling described in 40 CFR part 1065, subpart F, may be used.

(1) Adjust analyzer to optimize performance.

(2) Zero the hydrocarbon analyzer with purified synthetic air or zero-grade nitrogen.

(3) Calibrate on each used operating range with calibration gases having nominal concentrations between 10 and 90 percent of that range. A minimum of six evenly spaced points covering at least 80 percent of the 10 to 90 percent range (64 percent) is required (see following table).

Example calibration points (percent)	Acceptable for calibration?
20, 30, 40, 50, 60, 70	No, range covered is 50? percent, not 64 percent.
20, 30, 40, 50, 60, 70, 80, 90	Yes.
10, 25, 40, 55, 70, 85	Yes
10, 30, 50, 70, 90	No, though equally spaced and entire range covered, a minimum of six points is needed

(4) For each range calibrated, if the deviation from a least-squares best-fit straight line is two percent or less of the value at each data point, calculate concentration values by use of a single calibration factor for that range. If the deviation exceeds two percent at any point, use the best-fit non-linear equation which represents the data to within two percent of each test point to determine concentration.

(d) Oxygen interference optimization. Choose a range where the oxygen interference check gases will fall in the upper 50 percent. Conduct the test, as outlined in this paragraph, with the oven temperature set as required by the instrument manufacturer. Oxygen interference check gas specifications are found in § 91.312(d).

(1) Zero the analyzer.

(2) Span the analyzer with the 21 percent oxygen blend.

(3) Recheck zero response. If it has changed more than 0.5 percent of full scale repeat paragraphs (d)(1) and (d)(2) of this section to correct the problem.

(4) Introduce the 5 percent and 10 percent oxygen interference check gases.

(5) Recheck the zero response. If it has changed more than ±1 percent of full scale, repeat the test.

(6) Calculate the percent of oxygen interference (designated as percent O_2 I) for each mixture in paragraph (d)(4) of this section according to the following equation:

percent O_2 I = (B − Analyzer response (ppm C))/B × 100

$$\text{analyzer response} = \left(\frac{\text{A}}{\text{\% of fullscale analyzer response due to A}} \right) \times \left(\text{\% of fullscale analyzer response due to B} \right)$$

Where:

A=hydrocarbon concentration (ppmC) of the span gas used in paragraph (d)(2) of this section.

B=hydrocarbon concentration (ppmC) of the oxygen interference check gases used in paragraph (d)(4) of this section.

(7) The percent of oxygen interference (designated as percent O_2 I) must be less than ±three percent for all required oxygen interference check gases prior to testing.

(8) If the oxygen interference is greater than the specifications, incrementally adjust the air flow above and below the manufacturer's specifications, repeating paragraphs (d)(1) through (d)(7) of this section for each flow.

(9) If the oxygen interference is greater than the specification after adjusting the air flow, vary the fuel flow and thereafter the sample flow, repeating paragraphs (d)(1) through (d)(7) of this section for each new setting.

(10) If the oxygen interference is still greater than the specifications, repair or replace the analyzer, FID fuel, or burner air prior to testing. Repeat this section with the repaired or replaced equipment or gases.

[61 FR 52102, Oct. 4, 1996, as amended at 70 FR 40451, July 13, 2005]

§ 91.317 Carbon monoxide analyzer calibration.

(a) Calibrate the NDIR carbon monoxide analyzer described in this section.

(b) Initial and periodic interference check. Prior to its introduction into service and annually thereafter, check the NDIR carbon monoxide analyzer for response to water vapor and CO_2.

(1) Follow good engineering practices for instrument start-up and operation.

Adjust the analyzer to optimize performance on the most sensitive range to be used.

(2) Zero the carbon monoxide analyzer with either purified synthetic air or zero-grade nitrogen.

(3) Bubble a mixture of three percent CO_2 in N_2 through water at room temperature and record analyzer response.

(4) An analyzer response of more than one percent of full scale for ranges above 300 ppm full scale or more than three ppm on ranges below 300 ppm full scale requires corrective action. (Use of conditioning columns is one form of corrective action which may be taken.)

(c) Initial and periodic calibration. Calibrate the NDIR carbon monoxide analyzer prior to its introduction into service and monthly thereafter.

(1) Adjust the analyzer to optimize performance.

(2) Zero the carbon monoxide analyzer with either purified synthetic air or zero-grade nitrogen.

(3) Calibrate on each used operating range with carbon monoxide-in-N_2 calibration gases having nominal concentrations between 10 and 90 percent of that range. A minimum of six evenly spaced points covering at least 80 percent of the 10 to 90 range (64 percent) is required (see following table).

Example calibration points (percent)	Acceptable for calibration?
20, 30, 40, 50, 60, 70	No, range covered is 50 percent, not 64 percent.
20, 30, 40, 50, 60, 70, 80, 90	Yes.
10, 25, 40, 55, 70, 85	Yes.
10, 30, 50, 70, 90	No, though equally spaced and entire range covered, a minimum of six points is needed.

(4) Additional calibration points may be generated. For each range calibrated, if the deviation from a least-squares best-fit straight line is two percent or less of the value at each data point, concentration values may be calculated by use of a single calibration factor for that range. If the deviation exceeds two percent at any point, use the best-fit non-linear equation which represents the data to within two percent of each test point to determine concentration.

§91.318 Oxides of nitrogen analyzer calibration.

(a) Calibrate the chemiluminescent oxides of nitrogen analyzer as described in this section.

(b) Initial and periodic interference. Prior to its introduction into service, and monthly thereafter, check the chemiluminescent oxides of nitrogen analyzer for NO_2 to NO converter efficiency. Figure 2 in appendix B of this subpart is a reference for the following paragraphs:

(1) Follow good engineering practices for instrument start-up and operation. Adjust the analyzer to optimize performance.

(2) Zero the oxides of nitrogen analyzer with purified synthetic air or zero-grade nitrogen.

(3) Connect the outlet of the NO_X generator to the sample inlet of the oxides of nitrogen analyzer which has been set to the most common operating range.

(4) Introduce into the NO_X generator analyzer-system an NO-in-nitrogen (N_2) mixture with an NO concentration equal to approximately 80 percent of the most common operating range. The NO_2 content of the gas mixture must be less than 5 percent of the NO concentration.

(5) With the oxides of nitrogen analyzer in the NO mode, record the concentration of NO indicated by the analyzer.

(6) Turn on the NO_X generator O_2 (or air) supply and adjust the O_2 (or air) flow rate so that the NO indicated by the analyzer is about 10 percent less than indicated in paragraph (b)(5) of this section. Record the concentration of NO in this NO+O_2 mixture as value ''c.''

(7) Switch the NO_X generator to the generation mode and adjust the generation rate so that the NO measured on the analyzer is 20 percent of that measured in paragraph (b)(5) of this section. There must be at least 10 percent unreacted NO at this point. Record the concentration of residual NO as value ''d.''

(8) Switch the oxides of nitrogen analyzer to the NO_X mode and measure total NO_X. Record this value as ''a.''

(9) Switch off the NO_X generator but maintain gas flow through the system.

The oxides of nitrogen analyzer will indicate the NO_X in the $NO+O_2$ mixture. Record this value as ''b.''

(10) Turn off the NO_X generator O_2 (or air) supply. The analyzer will now indicate the NO_X in the original NO-in-N_2 mixture. This value should be no more than 5 percent above the value indicated in paragraph (b)(4) of this section.

(11) Calculate the efficiency of the NO_X converter by substituting the concentrations obtained into the following equation:

$$\text{percent efficiency} = (1 + (a - b)/(c - d)) \times 100$$

Where:

a=concentration obtained in paragraph (b)(8) of this section,

b=concentration obtained in paragraph (b)(9) of this section,

c=concentration obtained in paragraph (b)(6) of this section,

d=concentration obtained in paragraph (b)(7) of this section.

If converter efficiency is not greater than 90 percent, corrective action is required.

(c) Initial and periodic calibration. Prior to its introduction into service, and monthly thereafter, calibrate the chemiluminescent oxides of nitrogen analyzer on all normally used instrument ranges. Use the same flow rate as when analyzing samples. Proceed as follows:

(1) Adjust analyzer to optimize performance.

(2) Zero the oxides of nitrogen analyzer with zero-grade air or zero-grade nitrogen.

(3) Calibrate on each normally used operating range with NO-in-N_2 calibration gases with nominal concentrations between 10 and 90 percent of that range. A minimum of six evenly spaced points covering at least 80 percent of the 10 to 90 percent range (64 percent) is required (see following table).

Example calibration points (percent)	Acceptable for calibration?
20, 30, 40, 50, 60, 70	No, range covered is 50 percent, not 64 percent.
20, 30, 40, 50, 60, 70, 80, 90	Yes.
10, 25, 40, 55, 70, 85	Yes.
10, 30, 50, 70, 90	No, though equally spaced and entire range covered, a minimum of six points is needed.

(4) Additional calibration points may be generated. For each range calibrated, if the deviation from a least-squares best-fit straight line is two percent or less of the value at each data point, concentration values may be calculated by use of a single calibration factor for that range. If the deviation exceeds two percent at any point, use the best-fit non-linear equation which represents the data to within two percent of each test point to determine concentration.

(d) The initial and periodic interference, system check, and calibration test procedures specified in 40 CFR part 1065, subparts C and D, may be used in lieu of the procedures specified in this section.

[61 FR 52102, Oct. 4, 1996, as amended at 70 FR 40451, July 13, 2005]

§ 91.319 NO_X converter check.

(a) The efficiency of the converter used for the conversion of NO_2 to NO is tested as given in paragraphs (a)(1) through (a)(8) of this section (see Figure 2 in appendix B to this subpart).

(1) Using the test setup as shown in Figure 2 in appendix B to this subpart (see also § 91.318 of this chapter) and the procedures described in paragraphs (a)(2) through (a)(8) of this section, test the efficiency of converters by means of an ozonator.

(2) Calibrate the HCLD in the most common operating range following the manufacturer's specifications using zero and span gas (the NO content of which must amount to about 80 percent of the operating range and the NO_2 concentration of the gas mixture less than 5 percent of the NO concentration). The NO_X analyzer must be in the NO mode so that the span gas does not pass through the converter. Record the indicated concentration.

(3) Calculate the efficiency of the NO_X converter as described in § 91.318(b).

(4) Via a T-fitting, add oxygen continuously to the gas flow until the concentration indicated is about 20 percent less than the indicated calibration concentration given in paragraph (a)(2) of this section. Record the indicated concentration as ''c''. The ozonator is kept deactivated throughout the process.

(5) Activate the ozonator to generate enough ozone to bring the NO concentration down to about 20 percent (minimum 10 percent) of the calibration concentration given in paragraph (a)(2) of this section. Record the indicated concentration as ''d''.

NOTE: If, with the analyzer in the most common range the NO_X converter cannot give a reduction from 80 percent to 20 percent, then use the highest range which will give the reduction.

(6) Switch the NO analyzer to the NO_X mode, which means that the gas mixture (consisting of NO, NO_2, O_2 and N_2) now passes through the converter. Record the indicated concentration as ''a''.

(7) Deactivate the ozonator. The mixture of gases described in paragraph (a)(6) of this section passes through the converter into the detector. Record the indicated concentration as ''b''.

(8) Switched to NO mode with the ozonator deactivated, the flow of oxygen or synthetic air is also shut off. The NO_X reading of the analyzer may not deviate by more than ±5 percent of the theoretical value of the figure given in paragraph (a)(2) of this section.

(b) The efficiency of the converter must be tested prior to each calibration of the NO_X analyzer.

(c) The efficiency of the converter may not be less than 90 percent.

§91.320 Carbon dioxide analyzer calibration.

(a) Prior to its introduction into service, and monthly thereafter, or within one month prior to the certification test, calibrate the NDIR carbon dioxide analyzer as follows:

(1) Follow good engineering practices for instrument start-up and operation. Adjust the analyzer to optimize performance.

(2) Zero the carbon dioxide analyzer with either purified synthetic air or zero-grade nitrogen.

(3) Calibrate on each normally used operating range with carbon dioxide-in-N_2 calibration or span gases having nominal concentrations between 10 and 90 percent of that range. A minimum of six evenly spaced points covering at least 80 percent of the 10 to 90 percent range (64 percent) is required (see following table).

Example calibration points (percent)	Acceptable for calibration?
20, 30, 40, 50, 60, 70	No, range covered is 50 percent, not 64 percent.
20, 30, 40, 50, 60, 70, 80, 90	Yes.
10, 25, 40, 55, 70, 85	Yes.
10, 30, 50, 70, 90	No, though equally spaced and entire range covered, a minimum of six points is needed.

(4) Additional calibration points may be generated. For each range calibrated, if the deviation from a least-squares best-fit straight line is 2 percent or less of the value at each data point, concentration values may be calculated by use of a single calibration factor for that range. If the deviation exceeds 2 percent at any point, use the best-fit non-linear equation which represents the data to within 2 percent of each test point to determine concentration.

(b) The initial and periodic interference, system check, and calibration test procedures specified in 40 CFR part 1065, subparts C and D, may be used in lieu of the procedures in this section.

[61 FR 52102, Oct. 4, 1996, as amended at 70 FR 40451, July 13, 2005]

§91.321 NDIR analyzer calibration.

(a) *Detector optimization*. If necessary, follow the manufacturer's instructions for initial start-up and basic operating adjustments.

(b) *Calibration curve*. Develop a calibration curve for each range used as follows:

(1) Zero the analyzer.

(2) Span the analyzer to give a response of approximately 90 percent of full-scale chart deflection.

(3) Recheck the zero response. If it has changed more than 0.5 percent of full scale, repeat the steps given in paragraphs (b)(1) and (b)(2) of this section.

(4) Record the response of calibration gases having nominal concentrations between 10 and 90 percent of full-scale concentration. A minimum of six evenly spaced points covering at least 80 percent of the 10 to 90 percent range (64 percent) is required (see following table).

Example calibration points (percent)	Acceptable for calibration?
20, 30, 40, 50, 60, 70	No, range covered is 50 percent, not 64 percent.
20, 30, 40, 50, 60, 70, 80, 90	Yes.
10, 25, 40, 55, 70, 85	Yes.
10, 30, 50, 70, 90	No, though equally spaced and entire range covered, a minimum of six points is needed.

(5) Generate a calibration curve. The calibration curve must be of fourth order or less, have five or fewer coefficients, and be of the form of equation (1) or (2). Include zero as a data point. Compensation for known impurities in the zero gas can be made to the zero-data point. The calibration curve must fit the data points within 2 percent of point or one percent of full scale, whichever is less.

$$y = Ax^4 + Bx^3 + Cx^2 + Dx + E \qquad (1)$$

$$y = \frac{x}{Ax^4 + Bx^3 + Cx^2 + Dx + E} \qquad (2)$$

y=concentration
x=chart deflection

(6) Option. A new calibration curve need not be generated if:

(i) A calibration curve conforming to paragraph (b)(5) of this section exists;

(ii) The responses generated in paragraph (b)(4) of this section are within one percent of full scale or two percent of point, whichever is less, of the responses predicted by the calibration curve for the gases used in paragraph (b)(4) of this section.

(7) If multiple range analyzers are used, the lowest range used must meet the curve fit requirements below 15 percent of full scale.

(c) *Linear calibration criteria.* If any range is within 2 percent of being linear, a linear calibration may be used. To determine if this criterion is met:

(1) Perform a linear least-square regression on the data generated. Use an equation of the form y=mx, where x is the actual chart deflection and y is the concentration.

(2) Use the equation z=y/m to find the linear chart deflection (designated as z) for each calibration gas concentration (designated as y).

(3) Determine the linearity (designated as percent L) for each calibration gas by:

$$\text{percent L} = \frac{(zx)}{\text{Fullscale linear chart deflection}}(100)$$

(4) The linearity criterion is met if the percent L is less than ±2 percent for each data point generated. For each emission test, use a calibration curve of the form Y=mx. The slope (designated as m) is defined for each range by the spanning process.

§ 91.322 Calibration of other equipment.

Calibrate other test equipment as often as required by the manufacturer or as necessary according to good engineering practice.

§ 91.323 Analyzer bench checks.

(a) Prior to initial use and after major repairs, verify that each analyzer complies with the specifications given in Table 2 in appendix A to this subpart.

(b) If a stainless steel NO_2 to NO converter is used, condition all new or replacement converters. The conditioning consists of either purging the converter with air for a minimum of four hours or until the converter efficiency is greater than 90 percent. The converter must be at operational temperature while purging. Do not use this procedure prior to checking converter efficiency on in-use converters.

§ 91.324 Analyzer leakage check.

(a) *Vacuum side leak check.* (1) Check any location within the analysis system where a vacuum leak could affect the test results.

(2) The maximum allowable leakage rate on the vacuum side is 0.5 percent of the in-use flow rate for the portion

of the system being checked. The analyzer flows and bypass flows may be used to estimate the in-use flow rates.

(3) The sample probe and the connection between the sample probe and valve V2 (see Figure 1 in appendix B of this subpart) may be excluded from the leak check.

(b) *Pressure side leak check.* Substantial leaks of the sample on the pressure side of the system may impact sample integrity if the leaks are of sufficient magnitude. As a safety precaution, it is good engineering practice to perform periodic pressure side leak checks on the sampling system.

§91.325 Analyzer interference checks.

(a) Gases present in the exhaust other than the one being analyzed can interfere with the reading in several ways. Positive interference occurs in NDIR and PMD instruments when the interfering gas gives the same effect as the gas being measured, but to a lesser degree. Negative interference occurs in NDIR instruments by the interfering gas broadening the absorption band of the measured gas, and in CLD instruments by the interfering gas quenching the radiation. The interference checks described in this section are to be made initially and after any major repairs that could affect analyzer performance.

(b) CO analyzer water and CO_2 interference checks. Bubble through water at room temperature a CO_2 span gas having a concentration of between 80 percent and 100 percent inclusive of full scale of the maximum operating range used during testing and record the analyzer response. For dry measurements, this mixture may be introduced into the sample system prior to the water trap. The analyzer response must not be more than one percent of full scale for ranges equal to or above 300 ppm or more than three ppm for ranges below 300 ppm.

(c) NO_X analyzer quench check. The two gases of concern for CLD (and HCLD) analyzers are CO_2 and water vapor. Quench responses to these two gases are proportional to their concentrations and, therefore, require test techniques to determine quench at the highest expected concentrations experienced during testing.

(1) NO_X analyzer CO_2 quench check. (i) Pass a CO_2 span gas having a concentration of 80 percent to 100 percent of full scale of the maximum operating range used during testing through the CO_2 NDIR analyzer and record the value as ''a.''

(ii) Dilute the CO_2 span gas approximately 50 percent with NO span gas and pass through the CO_2 NDIR and CLD (or HCLD). Record the CO_2 and NO values as ''b'' and ''c'', respectively.

(iii) Shut off the CO_2 and pass only the NO span gas through the CLD (or HCLD). Record the NO value recorded as ''d.''

(iv) Calculate the percent CO_2 quench as follows, which may not exceed three percent:

$$\text{percent } CO_2 \text{ quench} = 100 - 100 \times [c \times a/(d \times a - d \times b)] \times a/b$$

Where:

a=Undiluted CO_2 concentration (percent)
b=Diluted CO_2 concentration (percent)
c=Diluted NO concentration (ppm)
d=Undiluted NO concentration (ppm)

(2) NO_X analyzer water quench check. (i) This check applies to wet measurements only. Pass an NO span gas having a concentration of 80 percent to 100 percent of full scale of a normal operating range through the CLD (or HCLD). Record the response as ''D.'' Bubble through water at room temperature the NO span gas and pass it through the CLD (or HCLD). Record the analyzers response as ''AR.'' Determine and record the analyzers absolute operating pressure and the bubbler water temperature. (It is important that the NO span gas contains minimal NO_2 concentration for this check. No allowance for absorption of NO_2 in water has been made in the following quench calculations.)

(ii) Calculations for water quench must consider dilution of the NO span gas with water vapor and scaling of the water vapor concentration of the mixture to that expected during testing. Determine the mixture's saturated vapor pressure (designated as ''Pwb'') that corresponds to the bubbler water temperature. Calculate the water concentration (''Z1'', percent) in the mixture by the following equation:

$$Z1 = 100 \times (Pwb / GP)$$

Where:

GP=the analyzer's standard operating pressure (pascals)

(iii) Calculate the expected dilute NO span gas and water vapor mixture concentration (designated as ''D1'') by the following equation:

$$D1 = D \times (1 - Z1/100)$$

(iv)(A) The maximum raw or dilute exhaust water vapor concentration expected during testing (designated as Wm) can be estimated from the CO_2 span gas (or as defined in the equation in this paragraph and designated as A) criteria in paragraph (c)(1) of this section and the assumption of a fuel atom H/C ratio of 1.8:1 as:

$$Wm(\%) = 0.9 \times A(\%)$$

Where:

A = maximum CO_2 concentration expected in the sample system during testing.

(B) Percent water quench shall not exceed 3 percent and shall be calculated by:

$$\% \text{ Water Quench} = 100 \times (D1 - AR)/D1 \times Wm/Z1$$

[61 FR 52102, Oct. 4, 1996, as amended at 70 FR 40451, July 13, 2005]

§ 91.326 Pre- and post-test analyzer calibration.

Calibrate the operating range of each analyzer used during the test prior to and after each test in accordance with the following procedure (A chronic need for parameter adjustment can indicate a need for instrument maintenance.):

(a) Make the calibration using a zero gas and a span gas whose nominal value is between 80 percent and 100 percent of full scale, inclusive, of the measuring range.

(b) Use the same analyzer(s) flow rate and pressure as that used during exhaust emission test sampling.

(c) Warm-up and stabilize the analyzer(s) before the calibration is made.

(d) If necessary, clean and/or replace filter elements before calibration is made.

(e) Calibrate analyzer(s) as follows:

(1) Zero the analyzer using the appropriate zero gas. Adjust analyzer zero if necessary. Zero reading should be stable.

(2) Span the analyzer using the appropriate span gas for the range being calibrated. Adjust the analyzer to the calibration set point if necessary.

(3) Recheck zero and span set points.

(4) If the response of the zero gas or span gas differs more than one percent of full scale, then repeat paragraphs (e)(1) through (3) of this section.

§ 91.327 Sampling system requirements.

(a) *Sample component surface temperature.* For sampling systems which use heated components, use engineering judgment to locate the coolest portion of each component (pump, sample line section, filters, and so forth) in the heated portion of the sampling system that has a separate source of power or heating element. Monitor the temperature at that location. If several components are within an oven, then only the surface temperature of the component with the largest thermal mass and the oven temperature need be measured.

(b) If water is removed by condensation, monitor the sample gas temperature or sample dew point either within the water trap or downstream. It may not exceed 7 °C.

§ 91.328 Measurement equipment accuracy/calibration frequency table.

(a) The accuracy of measurements must be such that the maximum tolerances shown in Table 2 in appendix A to this subpart are not exceeded.

(b) Calibrate all equipment and analyzers according to the frequencies shown in Table 2 in appendix A to this subpart.

(c) Prior to initial use and after major repairs, bench check each analyzer (see § 91.323).

(d) Calibrate as specified in § 91.306 and §§ 91.315 through 91.322.

(e) At least monthly, or after any maintenance which could alter calibration, perform the following calibrations and checks.

(1) Leak check the vacuum side of the system (see § 91.324(a)).

(2) Verify that the automatic data collection system (if used) meets the requirements found in Table 2 in appendix A to this subpart.

(3) Check the fuel flow measurement instrument to insure that the specifications in Table 2 in appendix A to this subpart are met.

(f) Verify that all NDIR analyzers meet the water rejection ratio and the CO_2 rejection ratio as specified in § 91.325.

(g) Verify that the dynamometer test stand and power output instrumentation meet the specifications in Table 2 in appendix A to this subpart.

§ 91.329 Catalyst thermal stress test.

(a) *Oven characteristics*. The oven used for termally stressing the test catalyst must be capable of maintaining a temperature of 500 ±5 °C and 1000 ±10 °C.

(b) *Evaluation gas composition*. (1) A synthetic exhaust gas mixture is used for evaluating the effect of thermal stress on catalyst conversion efficiency.

(2) The synthetic exhaust gas mixture must have the following composition:

Constituent	Volume percent	Parts per million
Carbon Monoxide [1]	1	
Oxygen	1.3	
Carbon Dioxide	9	
Water Vapor	10	
Sulfur Dioxide		20
Oxides of Nitrogen		280
Hydrogen		3500
Hydrocarbon [1,2]		4000
Nitrogen=Balance		

[1] Alternatively, the carbon monoxide and hydrocarbon proportions of the mixture may be changed to 1.2% and 4650 ppm, respectively (using on of these alternative concentrations requires that the other be used simultaneously).
[2] Propylene/propane ratio=2/1.

[61 FR 52102, Oct. 4, 1996; 62 FR 20066, Apr. 24, 1997]

Appendix A to Subpart D of Part 91—Tables

Table 1—Symbols Used in Subparts D and E

Symbol	Term	Unit
A_{YM}	Final weighted emission test results	g/kW-hr
C_3H_8	Propane	
C_B	Concentration of emission in background sample	ppm
C_D	Concentration of emission in dilute sample	ppm
CO	Carbon monoxide	
CO_2	Carbon dioxide	
conc	Concentration (ppm by volume)	ppm
D_X.	Density of a specific emission (XX)	g/m^3
DXX	Volume concentration of a specific emission (XX) on a dry basis.	percent
DF	Dilution factor of dilute exhaust.	
D1	Water vapor mixture concentration	percent
f	Engine specific parameter considering atmospheric conditions	
G_{AIRD}	Intake air mass flow rate on dry basis	kg/h
G_{Fuel}	Fuel mass flow rate	kg/h
GP	Analyzer standard operating pressure	Pa
G_s	Mass of carbon measured during a sampling period	g
H	Absolute humidity (water content related to dry air)	gr/kg
H_2	Hydrogen	
i	Subscript denoting an individual mode	
IT	Indicated torque	N-m
K	Wet to dry conversion factor	
K_H	Humidity correction factor	
K_V	Calibration coefficient for critical flow venturi	
M_X.	Molecular weight of a specific molecule(XX)	g/mole
mass	Pollutant mass flow	g/h
M_{FUEL}	Mass of fuel consumed during a sampling period	g
N	Pump revolutions during test period	revs
N_2	Nitrogen	
NO	Nitric oxide	
NO_2	Nitrogen dioxide	
NO_X	Oxides of nitrogen	
O_2	Oxygen	
O_2 I	Oxygen concentration of the burner air	percent
P	Absolute pressure	kPa
P_{AUX}	Declared total power absorbed by auxiliaries fitted for the test	kW
P_B	Total barometric pressure (average of the pre-test and post-test values).	kPa
P_{dew}	Test ambient saturation vapor pressure at the dew point	kPa
P_e	Absolute pump outlet pressure	kPa
P_{ED}	Pressure drop between the inlet and throat of metering venturi	kPa
P_i	$P_i=P_{M,i}+P_{AUX,i}$	

TABLE 1—SYMBOLS USED IN SUBPARTS D AND E—Continued

Symbol	Term	Unit
P_M	Maximum power measured at the test speed under test conditions.	kW
P_P	Absolute pump inlet pressure	kPa
P_{PI}	Inlet pressure depression of venturi or pump	kPa
P_{PO}	Pressure head at CVS pump outlet	kPa
P_s	Dry atmospheric pressure	kPa
P_V	Absolute venturi inlet pressure	kPa
P_{wb}	Saturated vapor pressure	Pa
Q_C	Volumetric flow rate of dilute exhaust through CVS at STP	m^3/hr
Q_S	Gas flow rate	m^3/min
R_{STP}	Ideal gas constant at STP	m^3/mole
R_2	Fuel carbon weight fraction	g/g
STP	Standard temperature and pressure	
t	Elapsed time for test period	sec.
T	Absolute temperature at air inlet	°C
T_a	Ambient temperature	°C
T_{EI}	Air temperature in to metering venturi or flowmeter	°C
T_K	Absolute temperature	K
T_P	Absolute pump inlet temperature	°C
T_{PI}	Air temperature at CVS pump inlet	°C
T_{PO}	Air temperature at CVS pump outlet	°C
T_V	Absolute venturi inlet temperature	°C
V_O	Pump flow	m^3/rev
W	Average mass flow of emissions	g/hr
W_X.	Mass rate of specific emission (XX)	g/hr
WXX	Volume concentration in exhaust of specific emission (XX) on wet basis.	ppm, ppmC, %
WF	Weighing factor	
Z1	Water concentration	percent
α	Fuel specific factor representing the hydrogen to carbon ratio.	

TABLE 2—MEASUREMENT ACCURACY CALIBRATION FREQUENCY

No.	Item	Permissible deviation from reading [1]		Calibration frequency
		non-idle	idle	
1	Engine speed	±2%	±2%	Monthly.
2	Torque	±5%		Monthly.
3	Fuel consumption	±1%	±5%	Monthly.
4	Air consumption	±2%	±5%	As required.
5	Coolant temperature	±2 °C	Same	As required.
6	Lubricant temperature	±2 °C	Same	As required.
7	Exhaust back pressure	±5%	Same	As required.
8	Inlet depression	±5%	Same	As required.
9	Exhaust gas temperature	±15 °C	Same	As required.
10	Air inlet temperature (combustion air)	±2 °C	Same	As required.
11	Atmospheric pressure	±0.5%	Same	As required.
12	Humidity (combustion air) (relative)	±3.0%	Same	As required.
13	Fuel temperature	±2 °C	Same	As required.
14	Temperature with regard to dilution system.	±2 °C	Same	As required.
15	Dilution air humidity	±3% absolute	Same	As required.
16	HC analyzer	±2% [2]	Same	Monthly.
17	CO analyzer	±2% [2]	Same	Monthly.
18	NO_X analyzer	±2% [2]	Same	Monthly.
19	NO_X converter check	90%	Same	Monthly.
20	CO_2 analyzer	±2% [2]	Same	Monthly.

[1] All accuracy requirements pertain to the final recorded value which is inclusive of the data acquisition system.
[2] If reading is under 100 ppm then the accuracy shall be ±2 ppm.

TABLE 3—TEST FUEL SPECIFICATIONS

Item	Property	Tolerance	Procedure (ASTM) [1]
Sulfur, ppm max	1000		D 2622
Benzene, max. percent	1.5		D 3606
RVP, psi	8.6	±0.6	D 323
Octane, R+M/2	89.9	±3.1	D 2699 D 2700

TABLE 3—TEST FUEL SPECIFICATIONS—Continued

Item	Property	Tolerance	Procedure (ASTM) [1]
IBP, °C	32.8	±11.0	D 86
10% point, °C	53.3	±5.5	D 86
50% point, °C	101.7	±8.3	D 86
90% point, °C	160.0	±11.1	D 86
End Point, max. °C	212.8	.....	D 86
Phosphorus, g/l, max	0.02	.....	D 3231
Lead, g/l, max	0.02	.....	.....
Manganese, g/l, max	0.004	.....	.....
Aromatics, max. percent	35	.....	D 1319
Olefins, max. percent	10	.....	D 1319
Saturates, percent	remain	.....	D 1319

[1] All ASTM Procedures in this table have been incorporated by reference. See § 91.6.

APPENDIX B TO SUBPART D OF PART 91—FIGURES

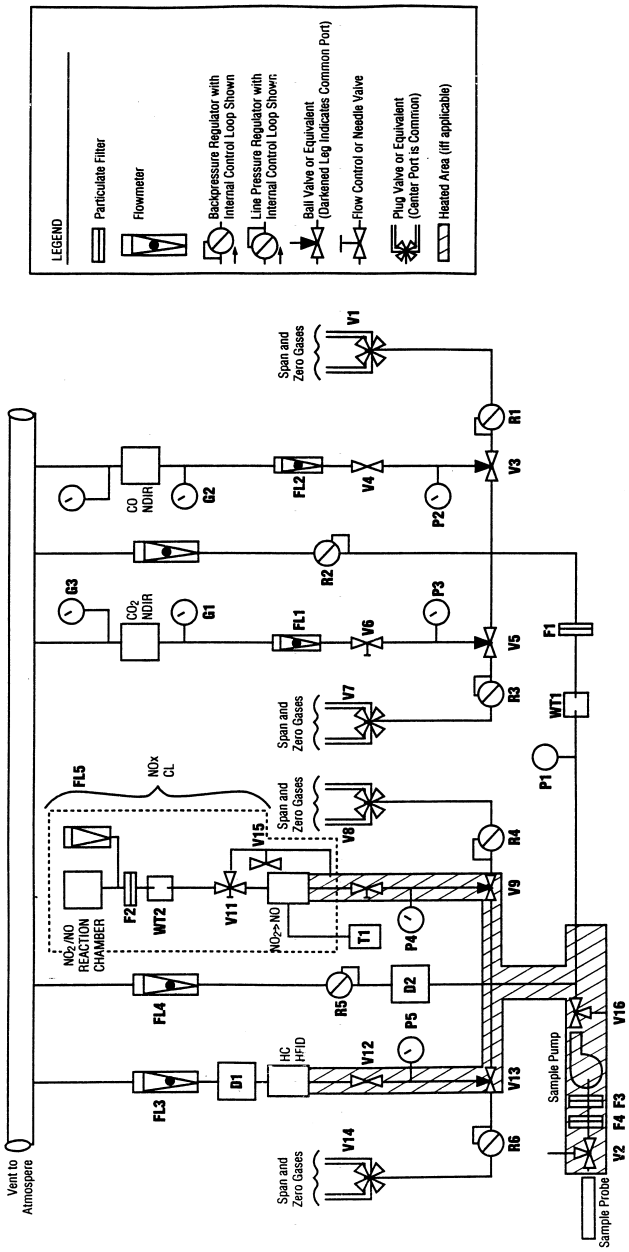

Figure 1. — Exhaust Gas Sampling and Analytical Train, Continuous Sampling

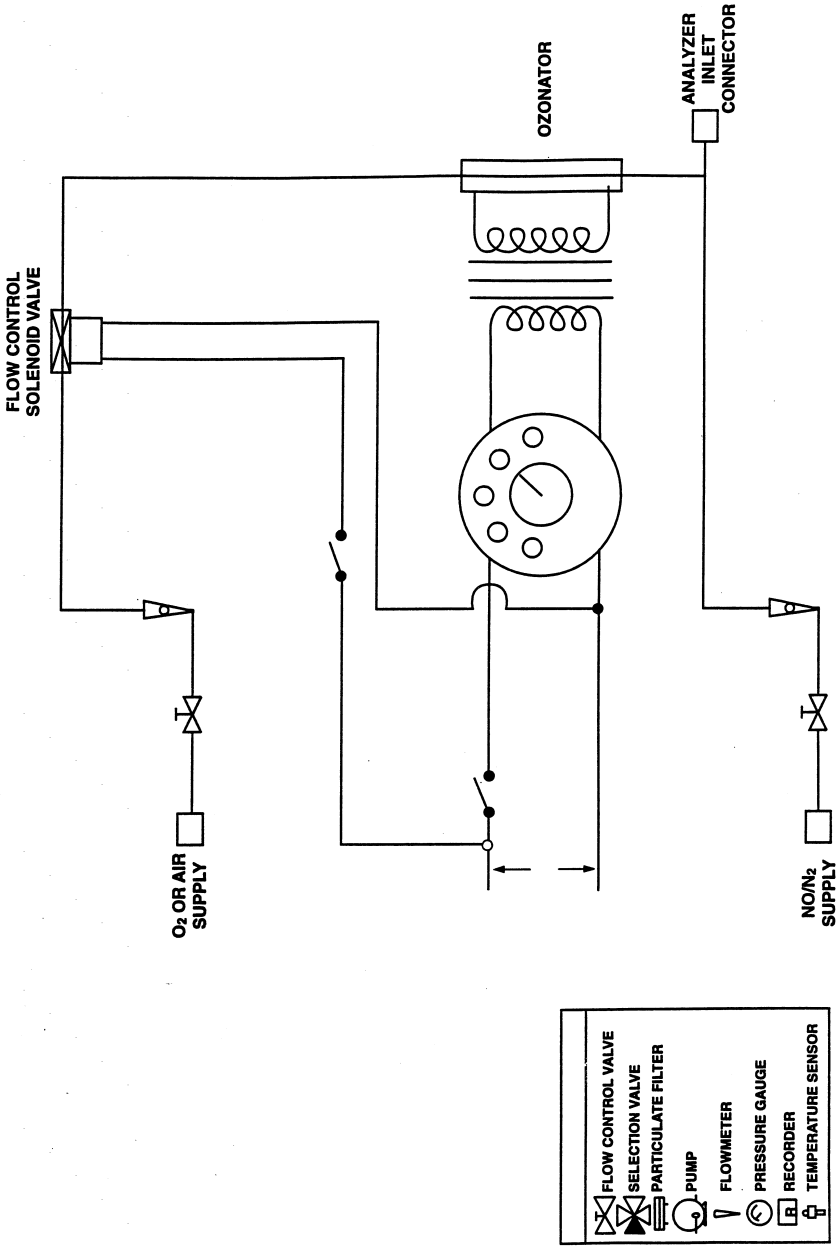

Figure 2. — NOx Converter Efficiency Detector

Subpart E—Gaseous Exhaust Test Procedures

§ 91.401 Scope; applicability.

(a) This subpart describes the procedures to follow in order to perform exhaust emission tests on new marine gasoline-fueled spark-ignition propulsion engines subject to the provisions of subpart A of this part 91. Provisions specific to raw gas sampling are in §§ 91.414 through 91.419, provisions specific to constant volume sampling are in §§ 91.420 through 91.426. All other sections in this subpart apply to both raw gas sampling and constant volume sampling unless indicated otherwise.

(b) Requirements for emission test equipment and calibrating this equipment are found in subpart D of this part.

§ 91.402 Definitions.

The definitions in §§ 91.3, 91.102, and 91.302 apply to this subpart.

§ 91.403 Symbols and abbreviations.

(a) The abbreviations in § 91.5 apply to this subpart.

(b) The symbols in Table 1 in appendix A to subpart D apply to this subpart.

§ 91.404 Test procedure overview.

(a) The test consists of prescribed sequences of engine operating conditions to be conducted on an engine dynamometer or equivalent load and speed measurement device. The exhaust gases generated during engine operation are sampled either raw or dilute, and specific components are analyzed through the analytical system.

(b) The tests are designed to determine the brake-specific emissions of hydrocarbons, carbon monoxide, and oxides of nitrogen. The test consists of one idle mode and four power modes with an exponential relationship between torque and speed which span the typical operating range of spark-ignition marine propulsion engines. These procedures require the determination of the concentration of each pollutant, fuel flow, and the power output during each mode. The measured values are weighted and used to calculate the grams of each pollutant emitted per brake kilowatt hour (g/kW-hr).

(c)(1) When an engine is tested for exhaust emissions the complete engine is tested, with all emission control devices installed and functioning.

(2) Additional accessories (for example, oil cooler, alternators, and so forth) may be installed, but such accessory loading will be considered parasitic in nature and observed power is used in the emission calculation.

(d) All emission control systems installed on or incorporated in the application must be functioning during all procedures in this subpart. In cases of component malfunction or failure, no maintenance is allowed without prior approval from the Administrator in accordance with § 91.118.

§ 91.405 Recorded information.

(a) Record the information described in this section for each test where applicable.

(b) *Test data; general.* (1) Engine identification number.

(2) Engine emissions control system.

(3) Test operator(s).

(4) Number of hours of operation accumulated on the engine prior to beginning the warm-up portion of the test (to the nearest tenth hour).

(5) Fuel identification.

(6) For two-stroke engines, fuel/oil mixture ratio.

(7) Date of most recent analytical assembly calibration.

(8) All pertinent instrument information such as tuning, gain, serial numbers, detector number, and calibration curve numbers. As long as this information is traceable, it may be summarized by system number or analyzer identification numbers.

(c) *Test data; pre-test.* (1) Date and time of day.

(2) Test number.

(3) Barometric pressure; as an option, barometric pressure can be measured as a modal measurement instead of or in addition to a pre- and post-test measurement.

(4) Recorder chart or equivalent. Identify for each test segment zero traces for each range used, and span traces for each range used.

(d) *Test data; modal.* (1) Recorder chart or equivalent. Identify for each

test mode the emission concentration traces and the associated analyzer range(s).

(2) Observed engine torque.

(3) Observed engine rpm.

(4) Engine intake air flow, if applicable.

(5) Test cell temperature and humidity for each mode.

(6) For raw gas testing; fuel flow for each mode. Fuel flow measurement is not required for dilute testing but is allowed. If the fuel flow measurement is a volume measurement system, record the fuel temperature in the measurement system for fuel density corrections to the mass flow rate. If the fuel temperature is within 3 °C of the calibration temperature, no density correction is required.

(7) Engine intake temperature and humidity for each mode, if applicable.

(8) Exhaust sample line temperature, if applicable.

(e) *Test data; post-test.* (1) Recorder chart or equivalent. Identify the hang-up check.

(2) Recorder chart or equivalent. Identify the zero traces for each range used and the span traces for each range used.

(3) Total number of hours of operation accumulated on the engine (to the nearest tenth hour).

(4) Barometric pressure, post-test segment.

§91.406 Engine parameters to be measured and recorded.

Measure or calculate, then record, the engine parameters in Table 1 in appendix A of this subpart.

§91.407 Engine inlet and exhaust systems.

(a) The marine engine manufacturer is liable for emission compliance over the full range of restrictions that are specified by the manufacturer for that particular engine.

(b) The air inlet filter system and exhaust muffler system combination used on the test engine must be the systems expected to yield the highest emission levels.

§91.408 Pre-test procedures.

(a) *Engine service accumulation and stabilization procedure.* Use the service accumulation procedure determined by the manufacturer for exhaust emission stabilizing of an engine, consistent with good engineering practice (see §91.117).

(1) The manufacturer determines, for each engine family, the number of hours at which the engine exhaust emission control system combination is stabilized for emission testing. However, this stabilization procedure may not exceed 12 hours. The manufacturer must maintain, and provide to the Administrator upon request, a record of the rationale used in making this determination. If the manufacturer can document that, at some time prior to the full 12 hour service accumulation period, the engine emissions are decreasing for the remainder of the 12 hours, the service accumulation may be completed at that time. The manufacturer may elect to accumulate 12 hours on each test engine within an engine family without making this determination.

(2) During service accumulation, the fuel and lubricants specified in §91.308 must be used.

(3) Engine maintenance during service accumulation is allowed only in accordance with §91.117.

(b) *Engine pre-test preparation.* (1) Drain and charge the fuel tank(s) with the specified test fuel (see §91.308) to 50 percent of the tank's nominal capacity. If an external fuel tank is used, the engine fuel inlet system pressure must be typical of what the engine will see in use.

(2) Operate the engine on the dynamometer measuring the fuel consumption (fuel consumption required only for raw gas sampling method) and torque before and after the emission sampling equipment is installed, including the sample probe, using mode 1 from Table 2 in appendix A of this subpart. The emission sampling equipment may not significantly affect the operational characteristics of the engine (typically, the results should agree within five percent).

(c) *Analyzer pre-test procedures.* (1) If necessary, warm up and stabilize the analyzer(s) before calibrations are performed.

(2) Replace or clean the filter elements and then vacuum leak check the

system per § 91.324(a). If necessary, allow the heated sample line, filters, and pumps to reach operating temperature.

(3) Perform the following system checks:

(i) If necessary, check the sample-line temperature. Heated FID sample line temperature must be maintained between 110 °C and 230 °C, a heated NO_X sample line temperature must be maintained between 60 °C and 230 °C.

(ii) Check that the system response time has been accounted for prior to sample collection data recording.

(iii) A hang-up check is permitted.

(4) Check analyzer zero and span before and after each test at a minimum. Further, check analyzer zero and span any time a range change is made or at the maximum demonstrated time span for stability for each analyzer used.

(d) Check system flow rates and pressures and reset if necessary.

§ 91.409 Engine dynamometer test run.

(a) Engine and dynamometer start-up.

(1) Only adjustments in accordance with § 91.118 may be made to the test engine prior to starting a test.

(2) If necessary, warm up the dynamometer as recommended by the dynamometer manufacturer ore good engineering practice.

(3) At the manufacturer's option, the engine can be run with the throttle in a fixed position or by using the engine's governor (if the engine is manufactured with a governor). In either case, the engine speed and load must meet the requirements specified in paragraph (b)(12) of this section.

(b) Each test consists of the following:

(1) Record the general test data as specified in § 91.405.

(2) Precondition the engine in the following manner;

(i) Operate the engine at idle for 2 to 3 minutes;

(ii) Operate the engine at a power greater than or equal to 50 percent power at the rated speed for 5 to 7 minutes;

(iii) Operate the engine at rated speed and maximum power for 25 to 30 minutes;

(iv) Option. For four-stroke engines, where appropriate, it is permitted to precondition the engine at rated speed and maximum power until the oil and water temperatures are stabilized. The temperatures are defined as stabilized if they are maintained within 2 percent of point for 2 minutes. The engine must be operated a minimum of 10 minutes for this option. This optional procedure may be substituted for step in paragraphs (b)(2)(iii) of this section;

(v) Option. If the engine has been operating on service accumulation for a minimum of 40 minutes, the service accumulation may be substituted for steps in paragraphs (b)(2) (i) through (iii) of this section.

(3) Record all pre-test data specified in § 91.405(c).

(4) Start the test cycle (see § 91.410) within 10 minutes of the completion of the steps required by paragraph (b)(2) of this section.

(5) During the first mode calculate the torque corresponding to 71.6, 46.5, and 25.3 percent of the maximum observed torque for the rated speed (see Table 2 in appendix A of this subpart).

(6) Once engine speed and load are set for a mode, run the engine for a sufficient period of time to achieve thermal stability. At the manufacturers option, determine and document the appropriate criterion for thermal stability for each engine family.

(7) Record all modal data specified in § 91.405(e) for a minimum time period of the last two minutes of each mode. Longer averaging periods are acceptable, but the data averaged must be from a continuous time period. The duration of time during which this data is recorded is referred to as the ''sampling period.'' The data collected during the sampling period is used for modal emission calculations.

(8) Continuously record the analyzer's response to the exhaust gas during the sampling period.

(9) Modes may be repeated.

(10) If a delay of more than one hour occurs between the end of one mode and the beginning of another mode, the test is void and must be restarted as described at paragraph (b)(1) of this section.

(11) The engine speed and load must be maintained within the requirements

of §91.410 during the sampling period for each mode. If this requirement is not met, the mode is void and must be restarted.

(12) If at any time during a mode, the test equipment malfunctions or the specifications in §91.410 can not be met, the test is void, and must be aborted. Corrective action should be taken and the test restarted.

(13) Fuel flow and air flow during the idle condition may be determined just prior to or immediately following the dynamometer sequence, if longer times are required for accurate measurements. If the dilute sampling method (Constant Volume Sampling) is used, neither fuel flow nor air flow measurements are required.

(c) Exhaust gas measurements. (1) Measure HC, CO, CO_2, and NO_X concentration in the exhaust sample.

(2) Each analyzer range that may be used during a test segment must have the zero and span responses recorded prior to the start of the test. Only the range(s) used to measure the emissions during the test is required to have its zero and span recorded after the completion of the test. Depending on the stability of each individual analyzer, more frequent zero checks or spans between modes may be necessary.

(3) It is permitted to change filter elements between test segments.

(4) A leak check is permitted between modes.

(5) A hang-up check is permitted between modes (see §91.413).

(6) If, during the emission measurement portion of a mode, the value of the gauges downstream of the NDIR analyzer(s) G3 or G4 (See Figure 1 in appendix B of subpart D of this part) differs by more than ±0.5 kPa, the mode is void.

§91.410 Engine test cycle.

(a) The 5-mode cycle specified in Table 2 in appendix A to this subpart shall be followed in dynamometer operation tests of marine engines.

(b) During each non-idle mode the specified speed and load shall be held to within ±50 rpm or ±2 percent of point, whichever is greater. During each idle mode the engine speed shall be held within ±75 rpm or ±5 percent of the manufacturers specified idle speed, whichever is greater. For direct drive products (no neutral gear), it is acceptable to have an accessory load on the engine during the idle mode provided that the engine speed is within ±5 percent of the manufacturers specified idle speed and the accessory load is representative of in use operation.

(c) If the operating conditions specified in paragraph (b) of this section for modes 2, 3, 4, and 5 cannot be maintained, the Administrator may authorize deviations from the specified load conditions. Such deviations shall not exceed 10 percent of the maximum torque at the test speed. The minimum deviations, above and below the specified load, necessary for stable operation shall be determined by the manufacturer and approved by the Administrator prior to the test run.

(d) Do not include power generated during the idle mode (mode 5) in the calculation of emissions results.

§91.411 Post-test analyzer procedures.

(a) Perform a hang-up check within 60 seconds of the completion of the last mode in the test. Use the following procedure:

(1) Introduce a zero-grade gas or room air into the sample probe or valve V2 (see Figure 1 in appendix B of subpart D of this part) to check the ''hangup zero'' response. Simultaneously start a time measurement.

(2) Select the lowest HC range used during the test.

(3) Within four minutes of beginning the time measurement in paragraph (a)(1) of this section, the difference between the zero gas response and the hang-up zero response shall not be greater than 5.0 percent of full scale or 10 ppmC whichever is greater.

(b) Begin the analyzer span checks within six minutes after the completion of the last mode in the test. Record for each analyzer the zero and span response for each range used during the preceding test or test segment.

(c) If during the test, the filter element(s) were replaced or cleaned, a vacuum check must be performed per §91.324(a) immediately after the span checks. If the vacuum side leak check does not meet the requirements of §91.324(a) the test is void.

(d) Read and record the post-test data specified in § 91.405(e).

(e) For a valid test, the analyzer drift between the before-segment and after-segment span checks for each analyzer must meet the following requirements:

(1) The span drift (defined as the change in the difference between the zero response and the span response) must not exceed two percent of full-scale chart deflection for each range used.

(2) The zero response drift must not exceed two percent of full-scale chart deflection for each range used above 155 ppm (or ppm C), or three percent of full-scale chart deflection for each range below 155 ppm (or ppm C).

§ 91.412 Data logging.

(a) A computer or any other automatic data collection (ADC) device(s) may be used as long as the system meets the requirements of this subpart.

(b) Determine from the data collection records the analyzer responses corresponding to the end of each mode.

(c) Record data at a minimum of one Hz (one time per second).

(d) Determine the final value for power by averaging the individually calculated power points for each value of speed and torque recorded during the sampling period. As an alternative, the final value for power can be calculated from the average values for speed and torque, collected during the sampling period.

(e) Determine the final value for CO_2, CO, HC, and NO_X concentrations by averaging the concentration of each point taken during the sample period for each mode.

§ 91.413 Exhaust sample procedure—gaseous components.

(a) Automatic data collection equipment requirements. The analyzer response may be read by automatic data collection (ADC) equipment such as computers, data loggers, etc. If ADC equipment is used the following is required:

(1) For dilute grab (''bag'') analysis, the analyzer response must be stable at greater than 99 percent of the final reading for the dilute exhaust sample bag. A single value representing the average chart deflection over a 10-second stabilized period shall be stored.

(2) For continuous analysis systems, a single value representing the average integrated concentration over a cycle shall be stored. Alternatively, the ADC may store the individual instantaneous values collected during the measurement period.

(3) The chart deflections or average integrated concentrations required in paragraphs (a)(1) and (a)(2) of this section may be stored on long-term computer storage devices such as computer tapes, storage discs, punch cards, and so forth, or they may be printed in a listing for storage. In either case a chart recorder is not required and records from a chart recorder, if they exist, need not be stored.

(4) If ADC equipment is used to interpret analyzer values, the ADC equipment is subject to the calibration specifications of the analyzer as if the ADC equipment is part of analyzer system.

(b) Data records from any one or a combination of analyzers may be stored as chart recorder records.

(c) Grab sample analysis. For dilute grab sample analysis perform the following sequence:

(1) Calibrate analyzers using the procedure described in § 91.326.

(2) Record the most recent zero and span response as the pre-analysis value.

(3) Measure HC, CO, CO_2, and NO_X background concentrations in the sample bag(s) and background sample bag(s) using the same flow rates and pressures.

(4) Good engineering practice dictates that analyzers used for continuous analysis should be operated such that the measured concentration falls between 15 percent and 100 percent of full scale.

(5) A post-analysis zero and span check of each range must be performed and the values recorded. The number of events that may occur between the pre and post checks is not specified. However, the difference between pre-analysis zero and span values (recorded in paragraph (c)(5) or (c)(6) of this section) versus those recorded for the post-analysis check may not exceed the zero drift limit or the span drift limit

of 2 percent of full scale chart deflection for any range used. Otherwise the test is void.

(d) Continuous sample analysis. For continuous sample analysis, perform the following sequence:

(1) Calibrate analyzers using the procedures described in §91.326.

(2) Leak check portions of the sampling system that operate at negative gauge pressures when sampling, and allow heated sample lines, filters, pumps, and so forth to stabilize at operating temperature.

(3) Option: Determine the hang-up for the FID or HFID sampling system:

(i) Zero the analyzer using zero air introduced at the analyzer port.

(ii) Flow zero air through the overflow sampling system. Check the analyzer response.

(iii) If the overflow zero response exceeds the analyzer zero response by two percent or more of the FID or HFID full-scale deflection, hang-up is indicated and corrective action must be taken (see paragraph (e) of this section).

(iv) The complete system hang-up check specified in paragraph (f) of this section is recommended as a periodic check.

(4) Obtain a stable zero reading.

(5) Good engineering practice dictates that analyzers used for continuous analysis should be operated such that the measured concentration falls between 15 percent and 100 percent of full scale.

(6) Record the most recent zero and span response as the pre-analysis values.

(7) Collect background HC, CO, CO_2, and NO_X in a sample bag (for dilute exhaust sampling only, see §91.422).

(8) Perform a post-analysis zero and span check for each range used at the conditions specified in paragraph (d)(1) of this section. Record these responses as the post-analysis values.

(9) Neither the zero drift nor the span drift between the pre-analysis and post-analysis checks on any range used may exceed three percent for HC, or two percent for NO_X. CO, and CO_2, of full scale chart deflection, or the test is void. (If the HC drift is greater than three percent of full-scale chart deflection, hydrocarbon hang-up is likely.)

(10) Determine background levels of NO_X. CO, or CO_2 (for dilute exhaust sampling only) by the grab (''bag'') technique outlined in paragraph (c) of this section.

(e) Hydrocarbon hang-up. If HC hang-up is indicated, the following sequence may be performed:

(1) Fill a clean sample bag with background air.

(2) Zero and span the HFID at the analyzer ports.

(3) Analyze the background air sample bag through the analyzer ports.

(4) Analyze the background air through the entire sample probe system.

(5) If the difference between the readings obtained is two ppm or more, clean the sample probe and the sample line.

(6) Reassemble the sample system, heat to specified temperature, and repeat the procedure in paragraphs (e)(1) through (e)(5) of this section.

§91.414 Raw gaseous exhaust sampling and analytical system description.

(a) Schematic drawing. An example of a sampling and analytical system which may be used for testing under this subpart is shown in Figure 4 in appendix B of this subpart. All components or parts of components that are wetted by the sample or corrosive calibration gases shall be either chemically cleaned stainless steel or inert material (e.g., polytetrafluoroethylene resin). The use of ''gauge savers'' or ''protectors'' with nonreactive diaphragms to reduce dead volumes is permitted.

(b) Sample probe. (1) The sample probe shall be a straight, closed end, stainless steel, multi-hole probe. The inside diameter shall not be greater than the inside diameter of the sample line + 0.03 cm. The wall thickness of the probe shall not be greater than 0.10 cm. The fitting that attaches the probe to the exhaust pipe shall be as small as practical in order to minimize heat loss from the probe.

(2) The probe shall have a minimum of three holes. The spacing of the radial planes for each hole in the probe must be such that they cover approximately equal cross-sectional areas of

the exhaust duct. The angular spacing of the holes must be approximately equal. The angular spacing of any two holes in one plane may not be 180° ±20° (i.e., section C-C of Figure 1 in appendix B of this subpart). The holes should be sized such that each has approximately the same flow. If only three holes are used, they may not all be in the same radial plane.

(3) The exhaust gas probe must be located in a position which yields a well mixed, homogeneous sample of the engine exhaust. The probe must extend radially through the exhaust duct prior to where the exhaust mixes with the cooling water. The cooling water flow may be rerouted if necessary to obtain an emission sample provided that the modification has no significant effect on the performance or emissions characteristics of the engine. The probe must pass through the approximate center and must extend across at least 80 percent of the diameter of the duct. The exact position of the probe may vary from engine family to engine family.

(c) Sample transfer line. (1) The maximum inside diameter of the sample line shall not exceed 1.32 cm.

(2) If valve V2 in Figure 1 of appendix B of Subpart D of this part is used, the sample probe must connect directly to valve V2 in Figure 1 of appendix B of subpart D of this part. The location of optional valve V2 may not be greater than 1.22 m from the exhaust duct.

(3) The location of optional valve V16 in Figure 1 of appendix B of subpart D of this part may not be greater than 61 cm from the sample pump. The leakage rate for this section on the pressure side of the sample pump may not exceed the leakage rate specification for the vacuum side of the pump.

(d) Venting. All vents including analyzer vents, bypass flow, and pressure relief vents of regulators should be vented in such a manner to avoid endangering personnel in the immediate area.

(e) Any variation from the specifications in this subpart including performance specifications and emission detection methods may be used only with prior approval by the Administrator.

(f) Additional components, such as instruments, valves, solenoids, pumps, switches, and so forth, may be employed to provide additional information and coordinate the functions of the component systems.

(g) The following requirements must be incorporated in each system used for raw testing under this subpart.

(1) Take the sample for all components with one sample probe and split it internally to the different analyzers.

(2) Heat the sample transport system from the engine exhaust pipe to the HC analyzer for the raw gas sampling method as indicated in Figure 1 in appendix B of subpart D of this part. The NO_X analyzer for the raw gas sampling method may be heated as indicated in Figure 1 in appendix B of subpart D of this part. The HC analyzer and the NO_X analyzer for the dilute sampling method may be heated as indicated in Figure 1 in appendix B of subpart D of this part.

§ 91.415 Raw gaseous sampling procedures.

Fit all heated sampling lines with a heated filter to extract solid particles from the flow of gas required for analysis. The sample line for HC measurement must be heated. The sample line for CO, CO_2, and NO_X may be heated or unheated.

§ 91.416 Intake air flow measurement specifications.

(a) If used, the engine intake air flow measurement method used must have a range large enough to accurately measure the air flow over the engine operating range during the test. Overall measurement accuracy must be ±2 percent of full-scale value of the measurement device for all modes except the idle mode. For the idle mode, the measurement accuracy shall be ±5 percent or less of the full-scale value. The Administrator must be advised of the method used prior to testing.

(b) When an engine system incorporates devices that affect the air flow measurement (such as air bleeds, air injection, pulsed air, and so forth) that result in understated exhaust emission results, make corrections to the exhaust emission results to account for such effects.

§91.417 Fuel flow measurement specifications.

(a) Fuel flow measurement is required only for raw testing but is allowed for dilute testing.

(b) The fuel flow rate measurement instrument must have a minimum accuracy of ±2 percent of full-scale flow rate for each measurement range used.

§91.418 Data evaluation for gaseous emissions.

For the evaluation of the gaseous emissions recording, record the last two minutes of each mode and determine the average values for HC, CO, CO_2, and NO_X during each mode from the average concentration readings determined from the corresponding calibration data.

§91.419 Raw emission sampling calculations.

(a) Derive the final test results through the steps described in this section.

(b) Air and fuel flow method. If both air and fuel flow mass rates are measured, the following equations are used to determine the weighted emission values for the test engine:

$$W_{NO_X} = \left(G_{AIRD} + G_{FUEL}\right) \times \frac{M_{NO_2}}{M_{exh}} \times WNO_X \times K_H \times \frac{1}{10^6}$$

$$W_{HC} = \left(G_{AIRD} + G_{FUEL}\right) \times \frac{M_{HC_{exh}}}{M_{exh}} \times WHC \times \frac{1}{10^6}$$

$$W_{CO} = \left(G_{AIRD} + G_{FUEL}\right) \times \frac{M_{CO}}{M_{exh}} \times WCO \times \frac{1}{10^2}$$

Where:

W_{HC} = Mass rate of HC in exhaust [g/hr],

G_{AIRD} = Intake air mass flow rate on dry basis [g/hr],

G_{FUEL} = Fuel mass flow rate [g/hr],

M_{HCexh} = Molecular weight of hydrocarbons in the exhaust; see the following equation:

$M_{HCexh} = 12.01 + 1.008 \times \alpha$

Where:

α=Hydrocarbon/carbon atomic ratio of the fuel.

M_{exh}=Molecular weight of the total exhaust; see the following equation:

$$M_{exh} = \frac{M_{HC_{exh}} \times WHC}{10^6} + \frac{28.01 \times WCO}{10^2} + \frac{44.1 \times WCO_2}{10^2} + \frac{46.01 \times WNO_x}{10^6} + \frac{2.016 \times WH_2}{10^2} + 18.01 \times (1 - K) + 28.01 \times \frac{\left[100 - \frac{WHC}{10^4} - WCO - WCO_2 - \frac{WNO_x}{10^4} - WH_2 - 100 \times (1 - K)\right]}{10^2}$$

Where:

WHC = HC volume concentration in exhaust, ppmC wet

WCO = CO percent concentration in the exhaust, wet

DCO = CO percent concentration in the exhaust, dry

WCO_2 = CO_2 percent concentration in the exhaust, wet

DCO_2 = CO_2 percent concentration in the exhaust, dry

WNO_X = NO volume concentration in exhaust, ppm wet

WH_2 = H_2 percent concentration in exhaust, wet

K = correction factor to be used when converting dry measurements to a wet basis. Therefore, wet concentration = dry concentration × K, where K is:

$$\frac{1}{1+0.005\times\left(DCO+DCO_2\right)\times\alpha-0.01\times DH_2}$$

DH_2 = H_2 percent concentration in exhaust, dry, calculated from the following equation:

$$DH_2=\frac{0.5\times\alpha\times DCO\times\left(DCO+DCO_2\right)}{DCO+\left(3\times DCO_2\right)}$$

W_{CO} = Mass rate of CO in exhaust, [g/hr]

M_{CO} = Molecular weight of CO = 28.01

W_{NOx} = Mass rate of NO_X in exhaust, [g/hr]

M_{NO2} = Molecular weight of NO_2 = 46.01

K_H = Factor for correcting the effects of humidity on NO_2 formation for four-stroke gasoline engines; see the equation below:

$$K_H=\frac{1}{1-0.0329\times\left(H-10.71\right)}$$

Where:

H = specific humidity of the intake air in grams of moisture per kilogram of dry air.

For two-stroke gasoline engines, KH should be set to 1.

(c) Fuel flow method. The following equations are to be used when fuel flow is selected as the basis for mass emission calculations using the raw gas method.

$$W_{HC}=\frac{G_{FUEL}}{TC}\times\frac{WHC}{10^4}$$

$$W_{CO}=\frac{M_{CO}}{M_F}\times\frac{G_{FUEL}}{TC}\times WCO$$

$$W_{NO_X}=\frac{M_{NOX}}{M_F}\times\frac{G_{FUEL}}{TC}\times\frac{WNO_X}{10^4}\times K_H$$

Where:

W_{HC} = Mass rate of HC in exhaust, [g/hr]

M_F = Molecular weight of test fuel; see following equation:

$$M_F=12.01+1.008\times\alpha$$

G_{FUEL} = Fuel mass flow rate, [g/hr]

TC = Total carbon; see following equation:

$$TC=WCO+WCO_2+\frac{WHC}{10^4}$$

WHC = HC volume concentration in exhaust, ppmC wet

WCO = CO percent concentration in the exhaust, wet

DCO = CO percent concentration in the exhaust, dry

WCO_2 = CO_2 percent concentration in the exhaust, wet

DCO_2 = CO_2 percent concentration in the exhaust, dry

WNO_X = NO volume concentration in exhaust, ppm wet

WH2 = H_2 percent concentration in exhaust, wet

K = correction factor to be used when converting dry measurements to a wet basis. Therefore, wet concentration = dry concentration × K, where K is:

$$K = \frac{1}{1 + 0.005 \times (DCO + DCO_2) \times \alpha - 0.01 \times DH_2}$$

DH_2 = H_2 percent concentration in exhaust, dry, calculated from the following equation:

$$DH_2 = \frac{0.5 \times \alpha \times DCO \times (DCO + DCO_2)}{DCO + (3 \times DCO_2)}$$

W_{CO} = Mass rate of CO in exhaust, [g/hr]
M_{CO} = Molecular weight of CO = 28.01
W_{NOx} = Mass rate of NO_X in exhaust, [g/hr]
M_{NO2} = Molecular weight of NO_2 = 46.01
K_H = Factor for correcting the effects of humidity on NO_2 formation for four-stroke gasoline engines; see the equation below:

$$K_H = \frac{1}{1 - 0.0329 \times (H - 10.71)}$$

Where:

H = specific humidity of the intake air in grams of moisture per kilogram of dry air. For two-stroke gasoline engines, KH should be set to 1.

(d) The final reported emission test results must be computed by using the following formula for each individual gas component:

$$Y_{wm} = \frac{\Sigma(W_i \times f_i)}{\Sigma(P_i \times f_i)}$$

Where:

Y_{wm} = Weighted mass emission level (HC, CO, NO_X) for a test [g/kW-hr].
W_i = Average mass flow rate (W_{HC}, W_{CO}, W_{NOx}) of an emission from the test engine during mode i, [g/hr].
f_i = Weighting factors for each mode according to §91.410(a)
P_i = Average power measured during mode i, [kW], calculated according to the formula given in §91.423(b). Power for the idle mode shall always be zero for this calculation.

(e) The final reported weighted brake-specific fuel consumption (WBSFC) shall be computed by use of the following formula:

$$WBSFC = \frac{\Sigma(F_i \times f_i)}{\Sigma(P_i \times f_i)}$$

Where:

WBSFC = Weighted brake-specific fuel consumption in grams of fuel per kilowatt-hour (g/kW-hr).
F_i = Fuel mass flow rate of the engine during mode i, [g/hr].
f_i = Weighting factors for each mode according to §91.410(a)
P_i = Average power measured during mode i, [kW], calculated according to the formula given in §91.423(b). Power for the idle mode shall always be zero for this calculation.

[61 FR 52102, Oct. 4, 1996, as amended at 67 FR 68340, Nov. 8, 2002; 70 FR 40452, July 13, 2005]

§91.420 CVS concept of exhaust gas sampling system.

(a) A dilute exhaust sampling system is designed to directly measure the true mass of emissions in engine exhaust without the necessity of measuring either fuel flow or intake air flow. This is accomplished by diluting the exhaust produced by an engine under test with ambient background air and measuring the total diluted exhaust flow rate and the concentration of emissions within the dilute flow. Total mass flow of an emission is then easily calculated.

(b) A constant volume sampler (CVS) is typically used to control the total amount of dilute flow through the system. As the name implies, a CVS restricts flow to a known value dependent only on the dilute exhaust temperature and pressure.

(c) For the testing described in this subpart, a CVS must consist of: A mixing tunnel into which the engine exhaust and dilutant (background) air are dumped; a dilute exhaust flow metering system; a dilute exhaust sample port; a background sample port; a dilute exhaust sampling system; and a background sampling system.

(1) *Mixing tunnel.* The mixing tunnel must be constructed such that complete mixing of the engine exhaust and background air is assured prior to the sampling probe.

(2) *Exhaust flow metering system.* A dilute exhaust flow metering system must be used to control the total flow

rate of the dilute engine exhaust as described in § 91.421.

(3) *Exhaust sample port.* A dilute exhaust sample port must be located in or downstream of the mixing tunnel at a point where complete mixing of the engine exhaust and background air is assured.

(4) *Background sample port.* A dilute background sample port must be located in the stream of background air before it is mixed with the engine exhaust. The background probe must draw a representative sample of the background air during each sampling mode.

(5) *Exhaust sampling system.* The dilute exhaust sampling system controls the flow of samples from the mixing tunnel to the analyzer system. This could be either a continuous sampling system or grab (bag) sampling system. If a critical flow venturi (CFV) is used on the dilute exhaust sample probe, this system must assure that the sample CFV is in choke flow during testing. If no CFV is used, this system must assure a constant volumetric flow rate through the dilute exhaust sample probe or must incorporate electronic flow compensation.

(6) *Background sampling system.* The background sampling system controls the flow of samples from the background air supply to the analyzer system. This could be either a continuous sampling system or grab (bag) sampling system. This system must assure a constant volumetric flow rate through the background sample probe.

§ 91.421 Dilute gaseous exhaust sampling and analytical system description.

(a) General. The exhaust gas sampling system described in this section is designed to measure the true mass emissions of engine exhaust. This system utilizes the Constant volume Sampling (CVS) concept (described in § 91.420) of measuring mass emissions of HC, NO_X. CO, and CO_2. Grab sampling for individual modes is an acceptable method of dilute testing for all constituents, HC, NO_X. CO, and CO_2. Continuous dilute sampling is not required for any of the exhaust constituents, but is allowable for all. Heated sampling is not required for any of the constituents, but is allowable for HC and NO_X. The mass of gaseous emissions is determined from the sample concentration and total flow over the test period. As an option, the measurement of total fuel mass consumed over a cycle may be substituted for the exhaust measurement of CO_2. General requirements are as follows:

(1) This sampling system requires the use of a Positive Displacement Pump—Constant Volume Sampler (PDP-CVS) system with a heat exchanger, or a Critical Flow Venturi—Constant Volume Sampler (CFV-CVS) system with CVS sample probes and/or a heat exchanger or electronic flow compensation. Figure 2 in appendix B of this subpart is a schematic drawing of the PDP-CVS system. Figure 3 in appendix B of this subpart is a schematic drawing of the CFV-CVS system.

(2) The HC analytical system requires:

(i) Grab sampling (see § 91.420, and Figure 2 or Figure 3 in appendix B of this subpart) and analytical capabilities (see § 91.423, and Figure 4 in appendix B of this subpart), or

(ii) Continuously integrated measurement of diluted HC meeting the minimum requirements and technical specifications contained in paragraph (b)(2) of this section.

(iii) The dilute HC analytical system for marine spark-ignition engines does not require a heated flame ionization detector (HFID).

(iv) If used, the HFID sample must be taken directly from the diluted exhaust stream through a heated probe and integrated continuously over the test cycle.

(v) The heated probe must be located in the sampling system far enough downstream of the mixing area to ensure a uniform sample distribution across the CVS duct at the sampling zone.

(3) The CO and CO_2 analytical system requires:

(i) Grab sampling (see § 91.420, and Figure 2 or Figure 3 in appendix B of this subpart) and analytical capabilities (see § 91.423, and Figure 4 in appendix B of this subpart), or

(ii) Continuously integrated measurement of diluted CO and CO_2 meeting

the minimum requirements and technical specifications contained in paragraph (b)(4) of this section.

(4) The NO_X analytical system requires:

(i) Grab sampling (see §91.420, and Figure 2 or Figure 3 in appendix B of this subpart) and analytical capabilities (see §91.423, and Figure 4 in appendix B of this subpart), or

(ii) A continuously integrated measurement of diluted NO_X meeting the minimum requirements and technical specifications contained in paragraph (b)(4) of this section.

(5) Since various configurations can produce equivalent results, exact conformance with these drawings is not required. Additional components such as instruments, valves, solenoids, pumps, and switches may be used to provide additional information and coordinate the functions of the component systems. Other components, such as snubbers, which are not needed to maintain accuracy on some systems, may be excluded if their exclusion is based upon good engineering judgment.

(6) Other sampling and/or analytical systems may be used if shown to yield equivalent results and if approved in advance by the Administrator.

(b) Component description. The components necessary for exhaust sampling must meet the following requirements:

(1) *Exhaust dilution system.* The PDP-CVS must conform to all of the requirements listed for the exhaust gas PDP-CVS in §91.420 of this chapter. The CFV-CVS must conform to all of the requirements listed for the exhaust gas CFV-CVS in §91.420. In addition, the CVS must conform to the following requirements:

(i) The flow capacity of the CVS must be sufficient to maintain the diluted exhaust stream in the dilution system at a temperature of 190 °C or less at the sampling zone for hydrocarbon measurement and as required to prevent condensation at any point in the dilution system. Gaseous emission samples may be taken directly from this sampling point.

(ii) For the CFV-CVS, either a heat exchanger or electronic flow compensation is required (see Figure 3 in appendix B of this subpart).

(iii) For the CFV-CVS when a heat exchanger is used, the gas mixture temperature, measured at a point immediately ahead of the critical flow venturi, must be within ±11 °C of the average operating temperature observed during the test with the simultaneous requirement that condensation does not occur. The temperature measuring system (sensors and readout) must have an accuracy and precision of ±2 °C. For systems utilizing a flow compensator to maintain proportional flow, the requirement for maintaining constant temperature is not necessary.

(2) *Continuous HC measurement system.* (i) The continuous HC sample system (as shown in Figure 2 or 3 in appendix B of this subpart) uses an ''overflow'' zero and span system. In this type of system, excess zero or span gas spills out of the probe when zero and span checks of the analyzer are made.

(ii) No other analyzers may draw a sample from the continuous HC sample probe, line, or system, unless a common sample pump is used for all analyzers and the sample line system design reflects good engineering practice.

(iii) The overflow gas flow rates into the sample line must be at least 105 percent of the sample system flow rate.

(iv) The overflow gases must enter the sample line as close as practical to the outside surface of the CVS duct or dilution system.

(v) The continuous HC sampling system consists of a probe (which for a HFID analyzer must raise the sample to the specified temperature) and, where used, a sample transfer system (which for a HFID must maintain the specified temperature). The HFID continuous hydrocarbon sampling system (exclusive of the probe) must:

(A) Maintain a wall temperature of 190 ±11 °C as measured at every separately controlled heated component (that is, filters, heated line sections), using permanent thermocouples located at each of the separate components.

(B) Have a wall temperature of 190 ±11 °C over its entire length. The temperature of the system is demonstrated by profiling the thermal characteristics of the system where possible at initial installation and after any major maintenance performed on the system.

The profiling is to be accomplished using the insertion thermocouple probing technique. The system temperature must be monitored continuously during testing at the locations and temperature described in § 91.421(b)(2).

(C) Maintain a gas temperature of 190 ±11 °C immediately before the heated filter and HFID. Determine these gas temperatures by a temperature sensor located immediately upstream of each component.

(vi) The continuous hydrocarbon sampling probe:

(A) Is defined as the first 25.4 to 76.2 cm of the continuous hydrocarbon sampling system.

(B) Has a 0.483 cm minimum inside diameter.

(C) Is installed in the dilution system at a point where the dilution air and exhaust are well mixed and provide a homogenous mixture.

(D) Is sufficiently distant (radially) from other probes and the system wall so as to be free from the influence of any wakes or eddies.

(E) For a continuous HFID sample probe, the probe must increase the gas stream temperature to 190 ±11 °C at the exit of the probe. Demonstrate the ability of the probe to accomplish this using the insertion thermocouple technique at initial installation and after any major maintenance. Demonstrate compliance with the temperature specification by continuously recording during each test the temperature of either the gas stream or the wall of the sample probe at its terminus.

(vii) The response time of the continuous measurement system must be taken into account when logging test data.

(3) *Sample mixing*. (i) configure the dilution system to ensure a well mixed, homogeneous sample prior to the sampling probe(s).

(ii) Make the temperature of the diluted exhaust stream inside the dilution system sufficient to prevent water condensation.

(iii) Direct the engine exhaust downstream at the point where it is introduced into the dilution system.

(4) *Continuously integrated NO_X. CO, and CO_2 measurement systems*. (i) Sample probe requirements:

(A) The sample probe for continuously integrated NO_X. CO, and CO_2 must be in the same plane as the continuous HC probe, but sufficiently distant (radially) from other probes and the tunnel wall so as to be free from the influences of any wakes or eddies.

(B) The sample probe for continuously integrated NO_X. CO, and CO_2 must be heated and insulated over the entire length, to prevent water condensation, to a minimum temperature of 55 °C. Sample gas temperature immediately before the first filter in the system must be at least 55 °C.

(ii) Conform to the continuous NO_X, CO, or CO_2 sampling and analysis system to the specifications of 40 CFR 1065.145, with the following exceptions and revisions:

(A) Heat the system components requiring heating only to prevent water condensation, the minimum component temperature is 55 °C.

(B) Coordinate analysis system response time with CVS flow fluctuations and sampling time/test cycle offsets to meet the time-alignment and dispersion specifications in 40 CFR pat 1065, subpart C.

(C) Use only analytical gases conforming to the specifications of 40 CFR 1065.750 for calibration, zero, and span checks.

(D) Use a calibration curve conforming to 40 CFR part 1065, subparts C and D, for CO, CO_2, and NO_X for any range on a linear analyzer below 155 ppm.

(iii) Convert the chart deflections or voltage output of analyzers with nonlinear calibration curves to concentration values by the calibration curve(s) specified in 40 CFR part 1065, subpart D, before flow correction (if used) and subsequent integration takes place.

[61 FR 52102, Oct. 4, 1996, as amended at 70 FR 40452, July 13, 2005]

§ 91.423 Exhaust gas analytical system; CVS grab sample.

(a) *Schematic drawings*. Figure 4 in appendix B of this subpart is a schematic drawing of the exhaust gas analytical system used for analyzing CVS grab ''bag'' samples from spark-ignition engines. Since various configurations can

produce accurate results, exact conformance with the drawing is not required. Additional components such as instruments, valves, solenoids, pumps and switches may be used to provide additional information and coordinate the functions of the component systems. Other components such as snubbers, which are not needed to maintain accuracy in some systems, may be excluded if their exclusion is based on good engineering judgement.

(b) *Major component description.* The analytical system, Figure 4 in Appendix B of this subpart, consists of a flame ionization detector (FID) or a heated flame ionization detector (HFID) for the measurement of hydrocarbons, nondispersive infrared analyzers (NDIR) for the measurement of carbon monoxide and carbon dioxide, and a chemiluminescence detector (CLD) (or heated CLD (HCLD)) for the measurement of oxides of nitrogen. The exhaust gas analytical system shall conform to the following requirements:

(1) The CLD (or HCLD) requires that the nitrogen dioxide present in the sample be converted to nitric oxide before analysis. Other types of analyzers may be used if shown to yield equivalent results and if approved in advance by the Administrator.

(2) If CO instruments are used which are essentially free of CO_2 and water vapor interference, the use of the conditioning column may be deleted. (See §§91.317 and 91.320.)

(3) A CO instrument will be considered to be essentially free of CO_2 and water vapor interference if its response to a mixture of three percent CO_2 in N_2, which has been bubbled through water at room temperature, produces an equivalent CO response, as measured on the most sensitive CO range, which is less than one percent of full scale CO concentration on ranges above 300 ppm full scale or less than 3 ppm on ranges below 300 ppm full scale. (See §91.317.)

(c) *Alternate analytical systems.* Analysis systems meeting the specifications and requirements of this subpart for dilute sampling may be used upon approval of the Administrator.

(d) *Other analyzers and equipment.* Other types of analyzers and equipment may be used if shown to yield equivalent results and if approved in advance by the Administrator.

§91.424 Dilute sampling procedure—CVS calibration.

(a) The CVS is calibrated using an accurate flowmeter and restrictor valve. (1) The flowmeter calibration shall be traceable to the National Institute for Standards and Testing (NIST), and will serve as the reference value (NIST ''true'' value) for the CVS calibration.)

NOTE: In no case should an upstream screen or other restriction which can affect the flow be used ahead of the flowmeter unless calibrated throughout the flow range with such a device.)

(2) The CVS calibration procedures are designed for use of a ''metering venturi'' type flowmeter. Large radius or American Society of Mechanical Engineers (ASME) flow nozzles are considered equivalent if traceable to NIST measurements. Other measurement systems may be used if shown to be equivalent under the test conditions in this section and traceable to NIST measurements.

(3) Measurements of the various flowmeter parameters are recorded and related to flow through the CVS.

(4) Procedures used by EPA for both PDP-CVS and CFV-CVS are outlined below. Other procedures yielding equivalent results may be used if approved in advance by the Administrator.

(b) After the calibration curve has been obtained, verification of the entire system may be performed by injecting a known mass of gas into the system and comparing the mass indicated by the system to the true mass injected. An indicated error does not necessarily mean that the calibration is wrong, since other factors can influence the accuracy of the system (e.g., analyzer calibration, leaks, or HC hangup). A verification procedure is found in paragraph (e) of this section.

(c) *PDP-CVS calibration.* (1) The following calibration procedure outlines the equipment, the test configuration, and the various parameters which must be measured to establish the flow rate of the CVS pump.

(i) All the parameters related to the pump are simultaneously measured with the parameters related to a flowmeter which is connected in series with the pump.

(ii) The calculated flow rate, in cm^3/s, (at pump inlet absolute pressure and temperature) can then be plotted versus a correlation function which is the value of a specific combination of pump parameters.

(iii) The linear equation which relates the pump flow and the correlation function is then determined.

(iv) In the event that a CVS has a multiple speed drive, a calibration for each range used must be performed.

(2) This calibration procedure is based on the measurement of the absolute values of the pump and flowmeter parameters that relate the flow rate at each point. Two conditions must be maintained to assure the accuracy and integrity of the calibration curve:

(i) The temperature stability must be maintained during calibration. (Flowmeters are sensitive to inlet temperature oscillations; this can cause the data points to be scattered. Gradual changes in temperature are acceptable as long as they occur over a period of several minutes.)

(ii) All connections and ducting between the flowmeter and the CVS pump must be absolutely void of leakage.

(3) During an exhaust emission test the measurement of these same pump parameters enables the user to calculate the flow rate from the calibration equation.

(4) Connect a system as shown in Figure 5 in appendix B of this subpart. Although particular types of equipment are shown, other configurations that yield equivalent results may be used if approved in advance by the Administrator. For the system indicated, the following measurements and accuracies are required:

CALIBRATION DATA MEASUREMENTS

Parameter	Symbol	Units	Sensor-readout tolerances
Barometric pressure (corrected)	P_B	kPa	±0.34 kPa
Ambient temperature	T_{EI}	°C	±0.28 °C
Air temperature into metering venturi	T_{EI}	°C	±1.11 °C
Pressure drop between the inlet and throat of metering venturi.	P_{ED}	kPa	±0.012 kPa
Air flow	Q_S	m^3/min.	±0.5 percent of NIST value
Air temperature at CVS pump inlet	P_{TI}	°C	±1.11 °C
Pressure depression at CVS pump inlet.	P_{PI}	kPa	±0.055 kPa
Pressure head at CVS pump outlet	P_{PO}	kPa	±0.055 kPa
Air temperature at CVS pump outlet (optional).	P_{TO}	°C	1.11 °C
Pump revolutions during test period	N	Revs	±1 Rev.
Elapsed time for test period	t	s	±0.5 s.

(5) After the system has been connected as shown in Figure 5 of appendix B of this subpart, set the variable restrictor in the wide open position and run the CVS pump for 20 minutes. Record the calibration data.

(6) Reset the restrictor valve to a more restricted condition in an increment of pump inlet depression that will yield a minimum of six data points for the total calibration. Allow the system to stabilize for 3 minutes and repeat the data acquisition.

(7) Data analysis:

(i) The air flow rate, Q_s, at each test point is calculated in standard cubic feet per minute 20 °C, 101.3 kPa from the flowmeter data using the manufacturer's prescribed method.

(ii) The air flow rate is then converted to pump flow, V_o, in cubic meter per revolution at absolute pump inlet temperature and pressure:

$$V_0 = \frac{Q_s}{n} \times \frac{T_P}{293} \times \frac{101.3\text{kPa}}{P_P}$$

Where:

V_O=Pump flow, m^3/rev at T_P, P_P,

Q_S=Meter air flow rate in standard cubic meters per minute, standard conditions are 20 °C, 101.3 kPa.

n=Pump speed in revolutions per minute.

T_p=Pump inlet temperature in Kelvin,=P_{TI}+273 [°K].

P_P=Absolute pump inlet pressure, kPa.

$=P_P - P_{PI}$

Where:

P_P=barometric pressure, kPa.

P_{PI}=Pump inlet depression, kPa.

(iii) The correlation function at each test point is then calculated from the calibration data:

$$X_o = \frac{1}{n}\sqrt{\left(\frac{\Delta p}{P_e}\right)}$$

Where:

X_O=correlation function.

Δ^p = The pressure differential from pump inlet to pump outlet, kPa.

$=P_E - P_P$.

P_E=Absolute pump outlet pressure, [kPa]

$=P_B+P_{PO}$

Where:

P_{PO}=Pressure head at pump outlet, kPa (inches fluid).

(iv) A linear least squares fit is performed to generate the calibration equation which has the form:

$$V_O = D_O - M(X_O)$$

D_O and M are the intercept and slope constants, respectively, describing the regression line.

(8) A CVS system that has multiple speeds should be calibrated on each speed used. The calibration curves generated for the ranges will be approximately parallel and the intercept values, DO, will increase as the pump flow range decreases.

(9) If the calibration has been performed carefully, the calculated values from the equation will be within ±0.50 percent of the measured value of V_O. Values of *M* will vary from one pump to another, but values of D_O for pumps of the same make, model and range should agree within ±three percent of each other. Calibrations should be performed at pump start-up and after major maintenance to assure the stability of the pump slip rate. Analysis of mass injection data will also reflect pump slip stability.

(d) CFV-CVS calibration. (1) Calibration of the CFV is based upon the flow equation for a critical venturi.

(i) Gas flow is a function of inlet pressure and temperature:

$$Q_s = \frac{K_v P}{\sqrt{T_K}}$$

Q_S=flow rate [m³/min.].

K_V=calibration coefficient.

P=absolute pressure [kPa].

T_K=absolute temperature [°K].

(ii) The calibration procedure described in paragraph (d)(3) of this section establishes the value of the calibration coefficient at measured values of pressure, temperature and air flow.

(2) The manufacturer's recommended procedure shall be followed for calibrating electronic portions of the CFV.

(3) Measurements necessary for flow calibration are as follows:

CALIBRATION DATA MEASUREMENTS

Parameter	Symbol	Units	Tolerances
Barometric Pressure (corrected)	P_B	kPa	±0.34 kPa
Air Temperature into flow meter	T_{EI}	°C	±0.28 °C
Pressure drop between the inlet and throat of metering venturi.	P_{ED}	kPa	±0.012 kPa
Air flow	Q_S	m³/min.	±0.5 percent of NIST value
CVS inlet depression	P_{PI}	kPa	±0.055 kPa
Pressure head at CVS pump outlet	P_{PO}	kPa	±0.055 kPa
Temperature at venturi inlet	T_V	°C	±2.22 °C

(4) Set up equipment as shown in Figure 6 in appendix B of this subpart and eliminate leaks. (Leaks between the flow measuring devices and the critical flow venturi will seriously affect the accuracy of the calibration.)

(5) Set the variable flow restrictor to the open position, start the blower, and allow the system to stabilize. Record data from all instruments.

(6) Vary the flow restrictor and make at least eight readings across the critical flow range of the venturi.

(7) Data analysis. The data recorded during the calibration are to be used in the following calculations:

(i) The air flow rate (designated as Q_s) at each test point is calculated in standard cubic feet per minute from

the flow meter data using the manufacturer's prescribed method.

(ii) Calculate values of the calibration coefficient for each test point:

$$K_v = \frac{Q_s \sqrt{T_v}}{P_v}$$

Q_S=Flow rate in standard cubic meter per minute, at the standard conditions of 20 °C, 101.3 kPa.

T_V=Temperature at venturi inlet, °K.

P_V=Pressure at venturi inlet, kPA

$=P_B - P_{PI}$

Where:

P_{PI} = Venturi inlet pressure depression, kPa.

(iii) Plot K_V as a function of venturi inlet pressure. For choked flow, K_V will have a relatively constant value. As pressure decreases (vacuum increases), the venturi becomes unchoked and K_V decreases. (See Figure 7 in appendix B of this subpart)

(iv) For a minimum of eight points in the critical region calculate an average K_V and the standard deviation.

(v) If the standard deviation exceeds 0.3 percent of the average K_V, take corrective action.

(e) CVS system verification. The following ''gravimetric'' technique can be used to verify that the CVS and analytical instruments can accurately measure a mass of gas that has been injected into the system. (Verification can also be accomplished by constant flow metering using critical flow orifice devices.)

(1) Obtain a small cylinder that has been charged with 99.5 percent or greater propane or carbon monoxide gas (CAUTION—carbon monoxide is poisonous).

(2) Determine a reference cylinder weight to the nearest 0.01 grams.

(3) Operate the CVS in the normal manner and release a quantity of pure propane into the system during the sampling period (approximately five minutes).

(4) The calculations are performed in the normal way except in the case of propane. The density of propane (0.6109 kg/m^{3}carbon atom is used in place of the density of exhaust hydrocarbons.

(5) The gravimetric mass is subtracted from the CVS measured mass and then divided by the gravimetric mass to determine the percent accuracy of the system.

(6) Good engineering practice requires that the cause for any discrepancy greater than ±2 percent must be found and corrected.

§ 91.425 CVS calibration frequency.

Calibrate the CVS positive displacement pump or critical flow venturi following initial installation, major maintenance or as necessary when indicated by the CVS system verification (described in § 91.424(e)).

§ 91.426 Dilute emission sampling calculations.

(a) The final reported emission test results must be computed by use of the following formula:

$$A_{wm} = \frac{\Sigma(W_i \times f_i)}{\Sigma(P_i \times f_i)} \times K_{Hi}$$

Where:

A_{wm}=Weighted mass emission level (HC, CO, CO_2, or NO_X) for a test [g/kW-hr].

W_i=Average mass flow rate of an emission from a test engine during mode i [g/hr].

WF_i = Weighting factor for each mode i as defined in § 91.410(a).

P_i = Gross average power generated during mode i [kW] calculated from the following equation (power for the idle mode shall always be zero for this calculation):

$$P_i = \frac{2\Pi}{60{,}000} \times \text{speed} \times \text{torque}$$

speed = average engine speed measured during mode i [rev./minute]

torque = average engine torque measured during mode i [N-m]

K_{Hi} = Humidity correction factor for mode i. This correction factor only affects calculations for NO_X and is equal to one for all other emissions. K_{Hi} is also equal to one for all two-stroke engines.

(b) The mass flow rate (W_i) of an emission for mode i is determined from the following equation:

$$W_i = Q_i \times D \times \left(C_{Di} - C_{Bi} \times \left(1 - \frac{1}{DF_i} \right) \right)$$

Where:

Q_i = Volumetric flow rate of the dilute exhaust through the CVS at standard conditions [m^3/hr at STP].

D = Density of a specific emission (D_{HC}, D_{CO}, D_{CO2}, D_{NOx}) in the exhaust [g/m³].
DF_i = Dilution factor of the dilute exhaust during mode i.
C_{Di} = Concentration of the emission (HC, CO, NO_X) in the dilute exhaust extracted from the CVS during mode i [ppm].
C_{Bi} = Concentration of the emission (HC, CO, NO_X) in the background sample during mode i [ppm].
STP = Standard temperature and pressure. All volumetric calculations made for the equations in this section are to be corrected to a standard temperature of 20 °C and 101.3 kPa.

(c) Densities for emissions that are to be measured for this test procedure are:

D_{HC} = 576.8 g/m³
DNO_X = 1912 g/m³
D_{CO} = 1164 g/m³
D_{CO2} = 1829 g/m³

(1) The value of D_{HC} above is calculated based on the assumption that the fuel used has a carbon to hydrogen ratio of 1:1.85. For other fuels, D_{HC} can be calculated from the following formula:

$$D_{HC} = \frac{M_{HC}}{R_{STP}}$$

Where:

M_{HC} = Molecular weight of the hydrocarbon molecule divided by the number of carbon atoms in the molecule [g/mole].
R_{STP} = Ideal gas constant for a gas at STP = 0.024065 [m³-mole].

(2) The idealized molecular weight of the exhaust hydrocarbons, ie., the molecular weight of the hydrocarbon molecule divided by the number of carbon atoms in the molecule, M_{HC} can be calculated from the following formula:

$$M_{HC} = M_C + \alpha M_H + \beta M_O$$

Where:

M_C = Molecular weight of carbon = 12.01 [g/mole].
M_H = Molecular weight of hydrogen = 1.008 [g/mole].
α = Hydrogen to carbon ratio of the test fuel.

(3) The value of D_{NOx} above assumes that NO_X in entirely in the form of NO_2.

(d) The dilution factor (DF) is the ratio of the volumetric flow rate of the background air to that of the raw engine exhaust. The following formula is used to determine DF:

$$DF = \frac{13.4}{C_{D_{HC}} + C_{D_{CO}} + C_{D_{CO_2}}}$$

Where:

C_{DHC} = Concentration of HC in the dilute sample [ppm].
C_{DCO} = Concentration of CO in the dilute sample [ppm].
C_{DCO2} = Concentration of CO_2 in the dilute sample [ppm].

(e) The humidity correction factor K_H is an adjustment made to the measured NO_X. This corrects for the sensitivity that a spark-ignition engine has to the humidity of its combustion air. The following formula is used to determine K_H for NO_X calculations:

$$K_H = \frac{1}{1 - 0.0329(H - 10.71)}$$

Where:

H = Absolute humidity of the engine intake air [grams of water per kilogram of dry air].

(f) The absolute humidity of the engine intake air H is calculated using the following formula:

$$H = \frac{6.211\, P_{dew}}{P_B - \left(\frac{P_{dew}}{100}\right)}$$

Where:

P_{dew} = Saturated vapor pressure at the dew point temperature [kPa].
P_b = Barometric pressure [kPa].

(g) The fuel mass flow rate F_i can be either measured or calculated using the following formula:

$$F_i = \frac{M_f}{T}$$

Where:

M_f = Mass of fuel consumed by the engine during the mode [g].
T = Duration of the sampling period [hr].

(h) The mass of fuel consumed during the mode sampling period, M_{FUEL} can be calculated from the following equation:

$$M_f = \frac{G_S}{R_2 \times 273.15}$$

Where:

G_S = Mass of carbon measured during the mode sampling period [g].

R_2 = The fuel carbon weight fraction, which is the mass of carbon in fuel per mass of fuel [g/g].

(i) The grams of carbon measured during the mode G_S can be calculated from the following equation:

$$G_S = \frac{12.011 \times HC_{mass}}{12.011 + 1.008\alpha} + 0.429CO_{mass} + 0.273CO_{2\,mass}$$

Where:

HC_{mass} = mass of hydrocarbon emissions for the mode sampling period [g].

CO_{mass} = mass of carbon monoxide emissions for the mode sampling period [g].

CO_{2mass} = mass of carbon dioxide emissions for the mode sampling period [g].

α = The atomic hydrogen to carbon ratio of the fuel.

§ 91.427 Catalyst thermal stress resistance evaluation.

(a)(1) The purpose of the evaluation procedure specified in this section is to determine the effect of thermal stress on catalyst conversion efficiency. The thermal stress is imposed on the test catalyst by exposing it to quiescent heated air in an oven. The evaluation of the effect of such stress on catalyst performance is based on the resultant degradation of the efficiency with which the conversions of specific pollutants are promoted. The application of this evaluation procedure involves the several steps that are described in the following paragraphs.

(2) The engine manufacturer need not submit catalyst conversion efficiency data for pollutants that the catalyst being tested was not designed to reduce/oxidize. The engine manufacturer must specify the pollutants that the catalyst will be converting and submit catalyst conversion efficiency data on only those pollutants.

(b) Determination of initial conversion efficiency.

(1) A synthetic exhaust gas mixture having the composition specified in § 91.329 is heated to a temperature of 450 ±5 °C and passed through the new test catalyst or, optionally, a test catalyst that has been exposed to temperatures less than or equal to 500 °C for less than or equal to two hours, under flow conditions that are representative of anticipated in-use conditions.

(2) The concentration of each pollutant of interest, that is, hydrocarbons, carbon monoxide, or oxides of nitrogen, in the effluent of the catalyst is determined by means of the instrumentation that is specified for exhaust gas analysis in subpart D of this part.

(3) The conversion efficiency for each pollutant is determined by:

(i) Subtracting the effluent concentration from the initial concentration,

(ii) Dividing this result by the initial concentration,

(iii) Multiplying this result by 100 percent.

(c) Imposition of thermal stress.

(1) The catalyst is placed in an oven that has been pre-heated to 1000 °C and the temperature of the air in the oven is maintained at 1000 ±10 °C for six hours. Optionally, the catalyst may instead be placed in an oven having a 90% nitrogen/10% water vapor environment that has been pre-heated to at least 850 °C and the temperature of the nitrogen/water vapor environment in the oven is maintained at 850 °C ±10 °C for six hours.

(2) The catalyst is removed from the oven and allowed to cool to room temperature.

(d) Determination of final conversion efficiency. The steps listen in paragraph (b) of this section are repeated.

(e) Determination of conversion efficiency degradation.

(1) The final conversion efficiency determined in paragraph (c) of this section is subtracted from the initial conversion efficiency determined in paragraph (b) of this section.

(2) This result is divided by the initial conversion efficiency.

(3) This result is multiplied by 100 percent.

(f) Determination of compliance with degradation limit. The percent degradation determined in paragraph (e) of

this section must not be greater than 20 percent.

APPENDIX A TO SUBPART E OF PART 91—TABLES

TABLE 1—PARAMETERS TO BE MEASURED OR CALCULATED AND RECORDED

Parameter	Units
Airflow rate (dry), if applicable	g/h
Fuel flow rate	g/h
Engine speed	rpm
Engine torque output	N · m
Power output	kW
Air inlet temperature	°C
Air humidity	mg/kg
Coolant temperature (liquid cooled)	°C
Exhaust mixing chamber surface temperature, if applicable.	°C
Exhaust sample line temperature, if applicable	°C
Total accumulated hours of engine operation	h

TABLE 1—PARAMETERS TO BE MEASURED OR CALCULATED AND RECORDED—Continued

Parameter	Units
Barometric pressure	kPa

TABLE 2—TEST CYCLE AND WEIGHTING FACTORS FOR MARINE ENGINES>

Mode No.	Engine speed as a percentage of engine rated speed	Engine torque as a percentage of maximum torque at rated speed	Mode weighting factor
1	100	100	0.06
2	80	71.6	0.14
3	60	46.5	0.15
4	40	25	0.25
5	idle	0	0.40

APPENDIX B TO SUBPART E OF PART 91—FIGURES

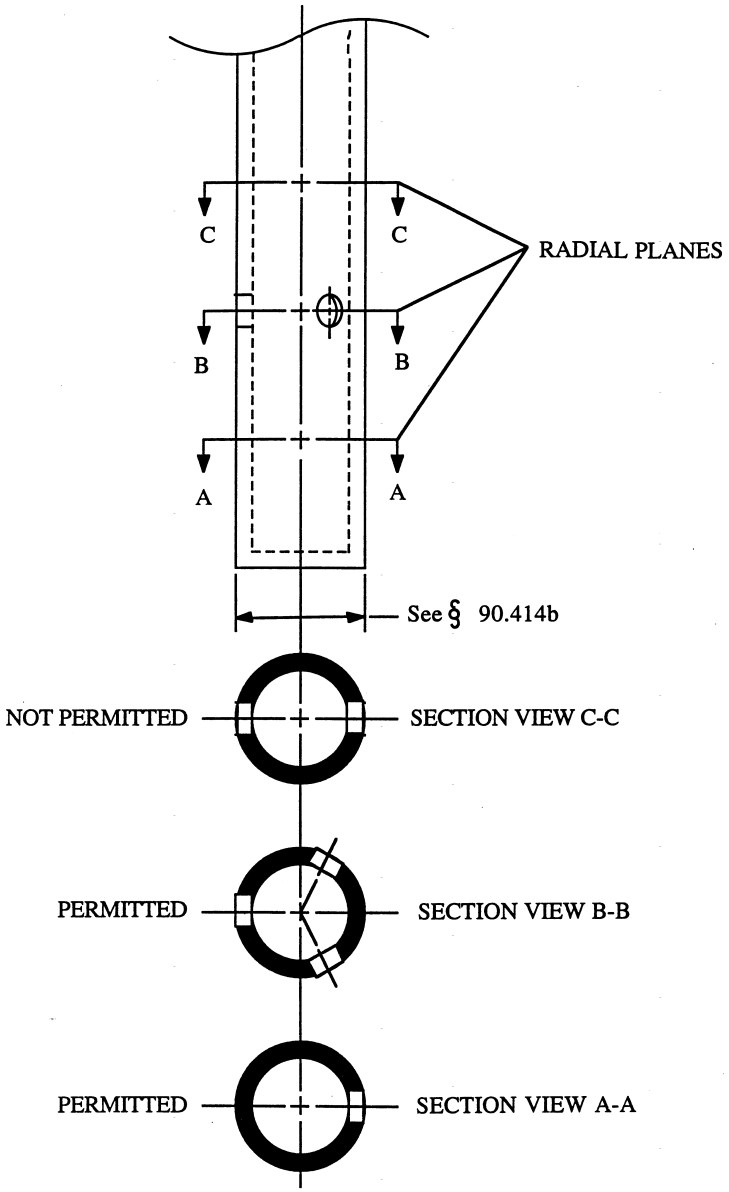

Figure 1.—Sample Probe and Typical Hole Spacings

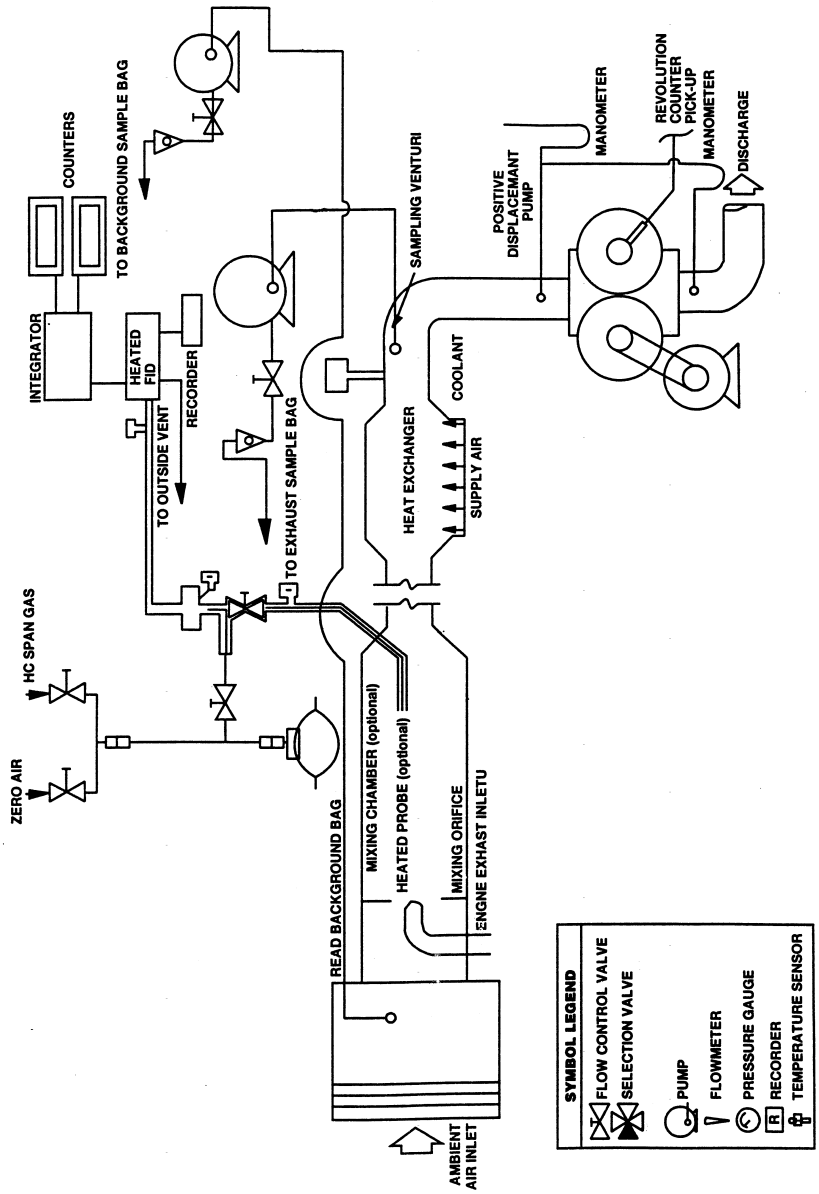

Figure 2 — Gaseous Emissions Sampling System (PDP-CVS) Showing both grab bag sampling and continous sampling

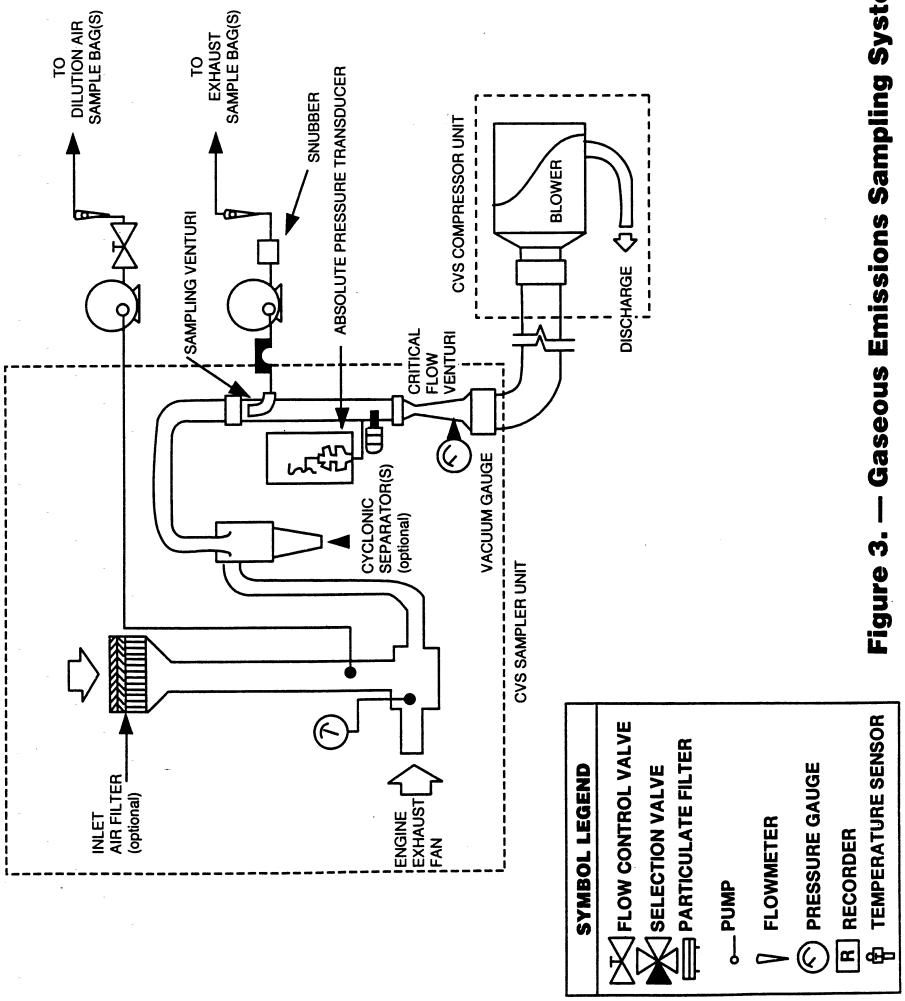

Figure 3. — Gaseous Emissions Sampling System (CVF-CVS)

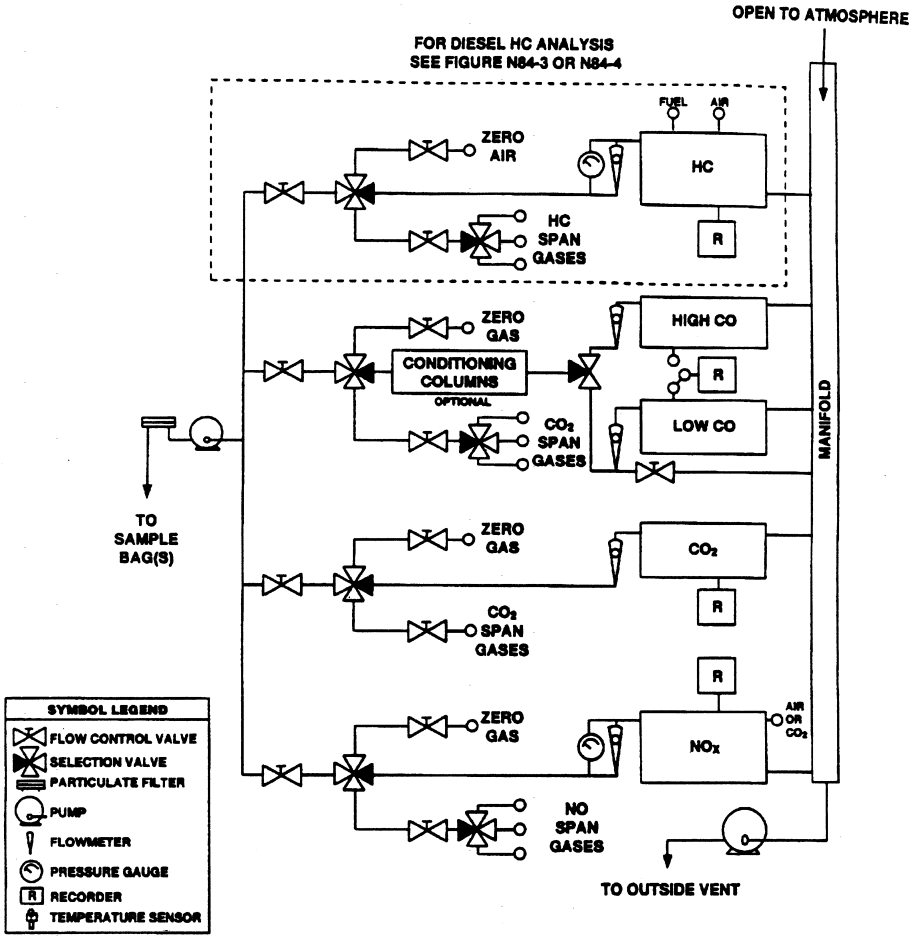

Figure 4. — Exhaust Gas Analytical System

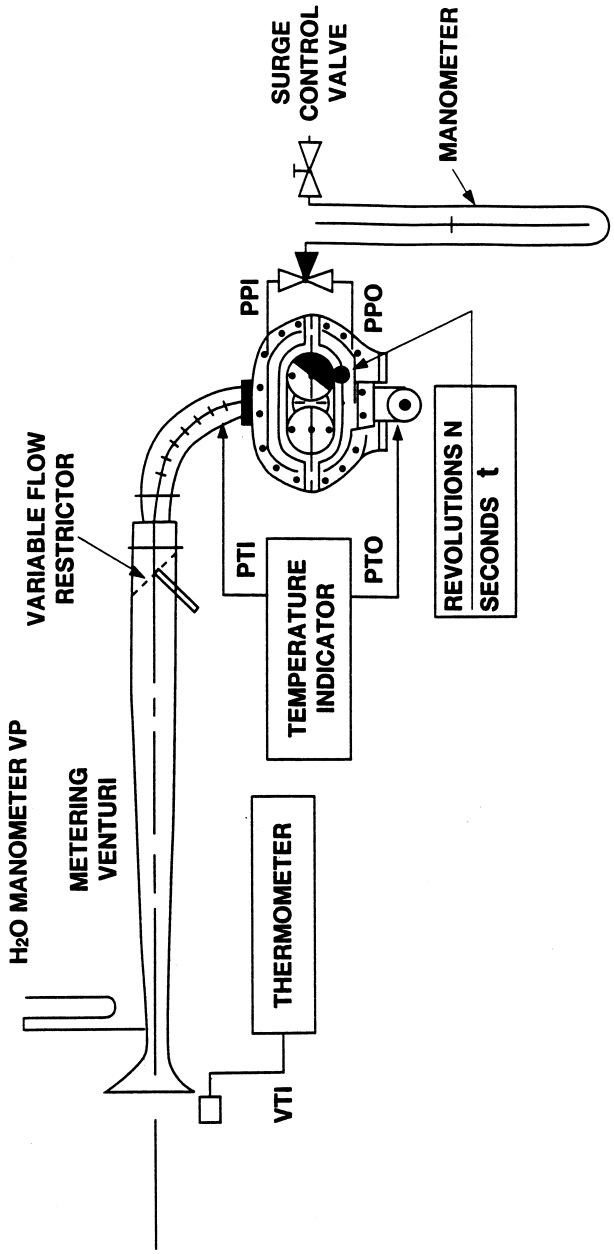

Figure 5. — PDP-CVS Calibration Configuration

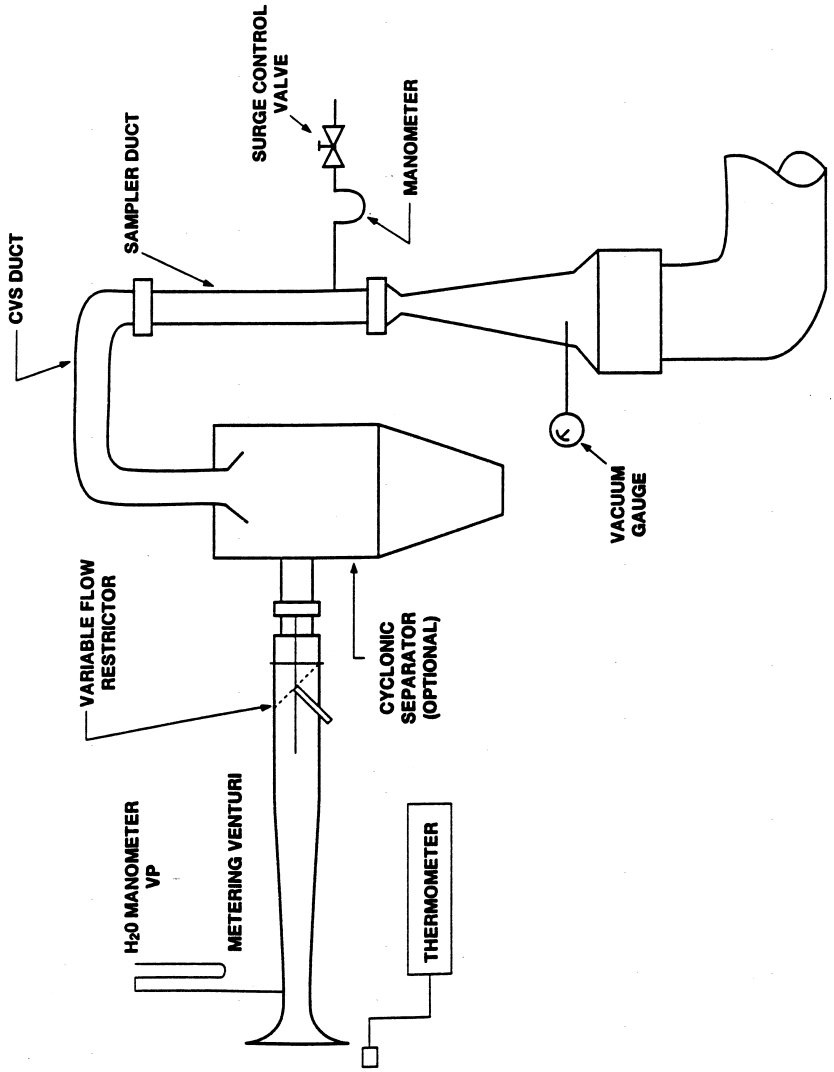

Figure 6. — CFV-CVS Calibration Configuration

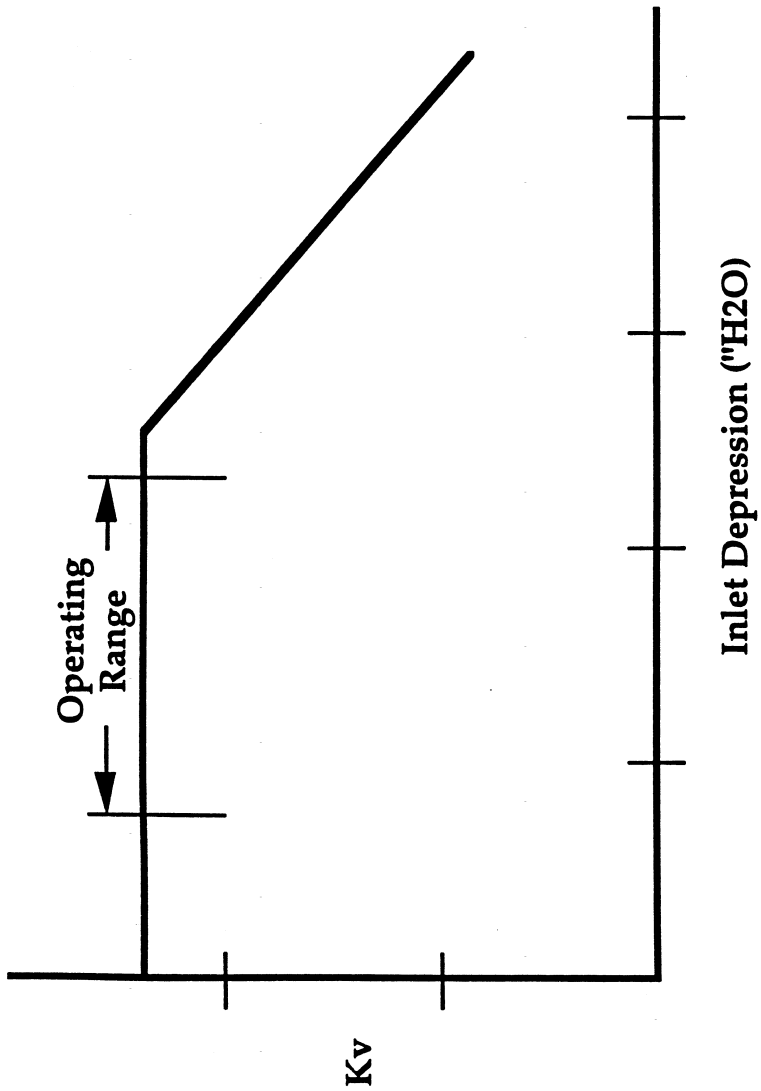

Figure 7.—Sonic Flow Choking

Subpart F—Manufacturer Production Line Testing Program

§ 91.501 Applicability.

(a) The requirements of this subpart F are applicable to all marine spark-ignition engines subject to the provisions of subpart A of this part 91.

(1) This subpart F applies to marine spark-ignition outboard engines beginning with model year 1999.

(2) This subpart F applies to marine spark-ignition personal watercraft engines beginning with model year 2000.

(b) The Administrator may waive the provisions of this subpart for a manufacturer or a specific engine family, as

specified in paragraphs (b) (1), (2) and (3) of this section.

(1) The provisions of this subpart are waived for existing technology OB/PWC through model year 2003.

(2) Upon request by a manufacturer, the Administrator may waive the provisions of this subpart for existing technology OB/PWC for a specific engine family through model year 2005 if the Administrator determines that the engine family will be phased out of production for sale in the U.S. by the end of model year 2005. As a condition to receiving such a waiver for either model year 2004, 2005 or both, the manufacturer must discontinue production of engines for sale in the U.S. according to a schedule determined by the Administrator upon granting this waiver. Failure to do so by the manufacturer will void *ab initio* the applicable certificate of conformity.

(3) A manufacturer request under paragraph (b)(2) of this section must be in writing and apply to a specific engine family. The request must identify the engine family designation, a written rationale supporting the FEL choice, the type of information used as a basis for the FEL (e.g., previous emission tests, development tests), the specific source of the information including when the information was generated, the requested schedule for phasing the engine family out of production, and any other information the Administrator may require.

[61 FR 52102, Oct. 4, 1996, as amended at 62 FR 15808, Apr. 2, 1997]

§ 91.502 Definitions.

The definitions in subpart A of this part apply to this subpart. The following definitions also apply to this subpart.

Configuration means any subclassification of an engine family which can be described on the basis of gross power, emission control system, governed speed, injector size, engine calibration, and other parameters as designated by the Administrator.

Test sample means the collection of engines selected from the population of an engine family for emission testing.

§ 91.503 Production line testing by the manufacturer.

(a) Manufacturers of marine SI engines shall test production line engines from each engine family according to the provisions of this subpart.

(b) Production line engines must be tested using the test procedure specified in subpart E of this part that was used in certification unless an alternate procedure is approved by the Administrator. Any adjustable engine parameter must be set to values or positions that are within the range recommended to the ultimate purchaser, unless otherwise specified by the Administrator. The Administrator may specify values within or without the range recommended to the ultimate purchaser.

§ 91.504 Maintenance of records; submittal of information.

(a) The manufacturer of any new marine SI engine subject to any of the provisions of this subpart must establish, maintain, and retain the following adequately organized and indexed records:

(1) *General records.* A description of all equipment used to test engines in accordance with § 91.503. Subpart D of this part sets forth relevant equipment requirements in §§ 91.306, 91.308, 91.309, and 91.313.

(2) *Individual records.* These records pertain to each production line test conducted pursuant to this subpart and include:

(i) The date, time, and location of each test;

(ii) The number of hours of service accumulated on the test engine when the test began and ended;

(iii) The names of all supervisory personnel involved in the conduct of the production line test;

(iv) A record and description of any adjustment, repair, preparation or modification performed prior to and/or subsequent to approval by the Administrator pursuant to § 91.507(b)(1), giving the date, associated time, justification, name(s) of the authorizing personnel, and names of all supervisory personnel responsible for the conduct of the repair;

(v) If applicable, the date the engine was shipped from the assembly plant,

associated storage facility or port facility, and the date the engine was received at the testing facility;

(vi) A complete record of all emission tests performed pursuant to this subpart (except tests performed directly by EPA), including all individual worksheets and/or other documentation relating to each test, or exact copies thereof, in accordance with the record requirements specified in § 91.405.

(vii) A brief description of any significant events during testing not otherwise described under paragraph (a)(2) of this section, commencing with the test engine selection process and including such extraordinary events as engine damage during shipment.

(3) The manufacturer must establish, maintain and retain general records, pursuant to paragraph (a)(1) of this section, for each test cell that can be used to perform emission testing under this subpart.

(b) The manufacturer must retain all records required to be maintained under this subpart for a period of one year after completion of all testing required for the engine family in a model year. Records may be retained as hard copy (i.e., on paper) or reduced to microfilm, floppy disk, or some other method of data storage, depending upon the manufacturer's record retention procedure; provided, that in every case, all the information contained in the hard copy is retained.

(c) The manufacturer must, upon request by the Administrator, submit the following information with regard to engine production:

(1) Projected production or actual production for each engine configuration within each engine family for which certification has been requested and/or approved,

(2) Number of engines, by configuration and assembly plant, scheduled for production or actually produced.

(d) Nothing in this section limits the Administrator's discretion to require a manufacturer to establish, maintain, retain or submit to EPA information not specified by this section.

(e) All reports, submissions, notifications, and requests for approval made under this subpart must be addressed to: Manager, Engine Compliance Programs Group 6403J, U.S. Environmental Protection Agency, 1200 Pennsylvania Ave., NW., Washington, DC 20460.

(f) The manufacturer must electronically submit the results of its production line testing using an EPA information format. The Administrator may exempt manufacturers from this requirement upon written request with supporting justification.

§ 91.505 Right of entry and access.

(a) To allow the Administrator to determine whether a manufacturer is complying with the provisions of this or other subparts of this part, one or more EPA enforcement officers may enter during operating hours and upon presentation of credentials any of the following places:

(1) Any facility, including ports of entry, where any engine to be introduced into commerce or any emission-related component is manufactured, assembled, or stored;

(2) Any facility where any test conducted pursuant to this or any other subpart or any procedure or activity connected with such test is or was performed;

(3) Any facility where any test engine is present; and

(4) Any facility where any record required under § 91.504 or other document relating to this subpart or any other subpart of this part is located.

(b) Upon admission to any facility referred to in paragraph (a) of this section, EPA enforcement officers are authorized to perform the following inspection-related activities:

(1) To inspect and monitor any aspect of engine manufacture, assembly, storage, testing and other procedures, and to inspect and monitor the facilities in which these procedures are conducted;

(2) To inspect and monitor any aspect of engine test procedures or activities, including test engine selection, preparation and service accumulation, emission test cycles, and maintenance and verification of test equipment calibration;

(3) To inspect and make copies of any records or documents related to the assembly, storage, selection, and testing of an engine; and

(4) To inspect and photograph any part or aspect of any engine and any

component used in the assembly thereof that is reasonably related to the purpose of the entry.

(c) EPA enforcement officers are authorized to obtain reasonable assistance without cost from those in charge of a facility to help the officers perform any function listed in this subpart and they are authorized to request the manufacturer to make arrangements with those in charge of a facility operated for the manufacturer's benefit to furnish reasonable assistance without cost to EPA.

(1) Reasonable assistance includes, but is not limited to, clerical, copying, interpretation and translation services; the making available on an EPA enforcement officer's request of personnel of the facility being inspected during their working hours to inform the EPA enforcement officer of how the facility operates and to answer the officer's questions; and the performance on request of emission tests on any engine which is being, has been, or will be used for production line or other testing.

(2) By written request, signed by the Assistant Administrator for Air and Radiation, and served on the manufacturer, a manufacturer may be compelled to cause the personal appearance of any employee at such a facility before an EPA enforcement officer. Any such employee who has been instructed by the manufacturer to appear will be entitled to be accompanied, represented, and advised by counsel.

(d) EPA enforcement officers are authorized to seek a warrant or court order authorizing the EPA enforcement officers to conduct the activities authorized in this section, as appropriate, to execute the functions specified in this section. EPA enforcement officers may proceed *ex parte* to obtain a warrant or court order whether or not the EPA enforcement officers first attempted to seek permission from the manufacturer or the party in charge of the facility(ies) in question to conduct the activities authorized in this section.

(e) A manufacturer must permit an EPA enforcement officer(s) who presents a warrant or court order to conduct the activities authorized in this section as described in the warrant or court order. The manufacturer must also cause those in charge of its facility or a facility operated for its benefit to permit entry and access as authorized in this section pursuant to a warrant or court order whether or not the manufacturer controls the facility. In the absence of a warrant or court order, an EPA enforcement officer(s) may conduct the activities authorized in this section only upon the consent of the manufacturer or the party in charge of the facility(ies) in question.

(f) It is not a violation of this part or the Clean Air Act for any person to refuse to permit an EPA enforcement officer(s) to conduct the activities authorized in this section if the officer(s) appears without a warrant or court order.

(g) A manufacturer is responsible for locating its foreign testing and manufacturing facilities in jurisdictions where local law does not prohibit an EPA enforcement officer(s) from conducting the entry and access activities specified in this section. EPA will not attempt to make any inspections which it has been informed local foreign law prohibits.

§91.506 Engine sample selection.

(a) At the start of each model year, the marine SI engine manufacturer will begin to randomly select engines from each engine family for production line testing at a rate of one percent. Each engine will be selected from the end of the assembly line.

(1) *For newly certified engine families:* After two engines are tested, the manufacturer will calculate the required sample size for the model year according to the Sample Size Equation in paragraph (b) of this section.

(2) *For carry-over engine families:* After one engine is tested, the manufacturer will combine the test with the last test result from the previous model year and then calculate the required sample size for the model year according to the Sample Size Equation in paragraph (b) of this section.

(b)(1) Manufacturers will calculate the required sample size for the model year for each engine family using the Sample Size Equation below. N is calculated from each test result. The number N indicates the number of tests

required for the model year for an engine family. N, is recalculated after each test. Test results used to calculate the variables in the Sample Size Equation must be final deteriorated test results as specified in § 91.509(c).

$$N = \left[\frac{(t_{95} * \sigma)}{(x - FEL)} \right]^2 + 1$$

where:

N=required sample size for the model year.

t_{95}=95% confidence coefficient. It is dependent on the actual number of tests completed, n, as specified in the table in paragraph (b)(2) of this section. It defines one-tail, 95 percent confidence intervals.

σ=actual test sample standard deviation calculated from the following equation:

$$\sigma = \sqrt{\frac{\Sigma(X_i - x)^2}{n - 1}}$$

x_i=emission test result for an individual engine

x=mean of emission test results of the actual sample

FEL=Family Emission Limit

n=The actual number of tests completed in an engine family

(2) Actual Number of Tests (n) & 1-tail Confidence Coefficients (t_{95})

n	t_{95}	n	t_{95}	n	t_{95}
2	6.31	12	1.80	22	1.72
3	2.92	13	1.78	23	1.72
4	2.35	14	1.77	24	1.71
5	2.13	15	1.76	25	1.71
6	2.02	16	1.75	26	1.71
7	1.94	17	1.75	27	1.71
8	1.90	18	1.74	28	1.70
9	1.86	19	1.73	29	1.70
10	1.83	20	1.73	30	1.70
11	1.81	21	1.72	∞	1.645

(3) A manufacturer must distribute the testing of the remaining number of engines needed to meet the required sample size N, evenly throughout the remainder of the model year.

(4) After each new test, the required sample size, N, is recalculated using updated sample means, sample standard deviations and the appropriate 95% confidence coefficient.

(5) A manufacturer must continue testing and updating each engine family's sample size calculations according to paragraphs (b)(1) through (b)(4) of this section until a decision is made to stop testing as described in paragraph (b)(6) of this section or a noncompliance decision is made pursuant to § 91.510(b).

(6) If, at any time throughout the model year, the calculated required sample size, N, for an engine family is less than or equal to the actual sample size, n, and the sample mean, x, for $HC+NO_X$ is less than or equal to the FEL, the manufacturer may stop testing that engine family.

(7) If, at any time throughout the model year, the sample mean, x, for $HC+NO_X$ is greater than the FEL, the manufacturer must continue testing that engine family at the appropriate maximum sampling rate.

(8) The maximum required sample size for an engine family (regardless of the required sample size, N, as calculated in paragraph (b)(1) of this section) is the lesser of thirty tests per model year or one percent of projected annual production for that engine family for that model year.

(9) Manufacturers may elect to test additional randomly chosen engines. All additional randomly chosen engines tested in accordance with the testing procedures specified in § 91.507 must be included in the Sample Size and Cumulative Sum equation calculations as defined in paragraph (b)(1) of this section and § 91.508(a), respectively.

(c) The manufacturer must produce and assemble the test engines using its normal production and assembly process for engines to be distributed into commerce.

(d) No quality control, testing, or assembly procedures will be used on any test engine or any portion thereof, including parts and subassemblies, that have not been or will not be used during the production and assembly of all other engines of that family, unless the Administrator approves the modification in production or assembly procedures.

§ 91.507 Test procedures.

(a)(1) For marine SI engines subject to the provisions of this subpart, the prescribed test procedures are specified in subpart E of this part.

(2) The Administrator may, on the basis of a written application by a

manufacturer, prescribe test procedures other than those specified in paragraph (a)(1) of this section for any marine engine he or she determines is not susceptible to satisfactory testing using procedures specified in paragraph (a)(1) of this section.

(b)(1) The manufacturer may not adjust, repair, prepare, or modify any test engine and may not perform any emission test on any test engine unless this adjustment, repair, preparation, modification and/or test is documented in the manufacturer's engine assembly and inspection procedures and is actually performed by the manufacturer or unless this adjustment, repair, preparation, modification and/or test is required or permitted under this subpart or is approved in advance by the Administrator.

(2) The Administrator may adjust or require to be adjusted any engine parameter which the Administrator has determined to be subject to adjustment for certification, production line testing and Selective Enforcement Audit testing, to any setting within the physically adjustable range of that parameter, as determined by the Administrator, prior to the performance of any test. However, if the idle speed parameter is one which the Administrator has determined to be subject to adjustment, the Administrator may not adjust it or require that it be adjusted to any setting which causes a lower engine idle speed than would have been possible within the physically adjustable range of the idle speed parameter if the manufacturer had accumulated 12 hours of service on the engine under paragraph (c) of this section, all other parameters being identically adjusted for the purpose of the comparison. The manufacturer may be requested to supply information necessary to establish an alternate minimum idle speed. The Administrator, in making or specifying these adjustments, may consider the effect of the deviation from the manufacturer's recommended setting on emission performance characteristics as well as the likelihood that similar settings will occur on in-use engines. In determining likelihood, the Administrator may consider factors such as, but not limited to, the effect of the adjustment on engine performance characteristics and information from similar in-use engines.

(c) Service accumulation. (1) Prior to performing exhaust emission production line testing, the manufacturer may accumulate on each test engine a number of hours of service equal to the greater of 12 hours or the number of hours the manufacturer accumulated during certification on the emission data engine for each engine family.

(2) Service accumulation must be performed in a manner using good engineering judgment to obtain emission results representative of production line engines.

(d) The manufacturer may not perform any maintenance on test engines after selection for testing.

(e) If an engine is shipped to a remote facility for production line testing, and an adjustment or repair is necessary because of shipment, the engine manufacturer must perform the necessary adjustment or repair only after the initial test of the engine, except in cases where the Administrator has determined that the test would be impossible or unsafe to perform or would permanently damage the engine. Engine manufacturers must report to the Administrator, in the quarterly report required by §91.509(e), all adjustments or repairs performed on test engines prior to each test.

(f) If an engine cannot complete the service accumulation or an emission test because of a malfunction, the manufacturer may request that the Administrator authorize either the repair of that engine or its deletion from the test sequence.

(g) *Testing.* A manufacturer must test engines with the test procedure specified in subpart E of this part to demonstrate compliance with the applicable FEL. If alternate procedures were used in certification, then those alternate procedures must be used in production line testing.

(h) *Retesting.* (1) If an engine manufacturer reasonably determines that an emission test of an engine is invalid, the engine may be retested. Emission results from all tests must be reported to EPA. The engine manufacturer must also include a detailed explanation of the reasons for invalidating any test in the quarterly report required in

§ 91.509(e). In the event a retest is performed, a request may be made to the Administrator, within ten days of the end of the production quarter, for permission to substitute the after-repair test results for the original test results. The Administrator will either affirm or deny the request by the engine manufacturer within ten working days from receipt of the request.

§ 91.508 Cumulative Sum (CumSum) procedure.

(a) Manufacturers must construct the following CumSum Equation for $HC+NO_X$ for each engine family. Test results used to calculate the variables in the CumSum Equation must be final deteriorated test results as defined in § 91.509(c).

$$C_i = \max[0\ 0R\ (C_{i-1} + X_i - (FEL + F))]$$

Where:

C_i = The current CumSum statistic

C_{i-1} = The previous CumSum statistic. Prior to any testing, the CumSum statistic = 0 (i.e. $C_0 = 0$)

X_i = The current emission test result for an individual engine

FEL = Family Emission Limit

$F = 0.25 \times \sigma$

After each test, C_i is compared to the action limit, H, the quantity which the CumSum statistic must exceed, in two consecutive tests, before the engine family may be determined to be in noncompliance for purposes of § 91.510.

H = The Action Limit. It is $5.0 \times \sigma$, and is a function of the standard deviation, σ.

σ = is the sample standard deviation and is recalculated after each test.

(b) After each engine is tested, the CumSum statistic shall be promptly updated according to the CumSum Equation in paragraph (a) of this section.

(c)(1) If, at any time during the model year, a manufacturer amends the application for certification for an engine family as specified in paragraph (a) of § 91.122 by performing an engine family modification (i.e. a change such as a running change involving a physical modification to an engine, a change in specification or setting, the addition of a new configuration, or the use of a different deterioration factor) with no changes to the FEL, all previous sample size and CumSum statistic calculations for the model year will remain unchanged.

(2) If, at any time during the model year, a manufacturer amends the application for certification for an engine family as specified in paragraph (a) of § 91.122 by modifying its FEL as a result of an engine family modification, the manufacturer must continue its calculations by inserting the new FEL into the sample size equation as specified in § 91.506(b)(1) and into the CumSum equation in paragraph (a) of this section. All previous calculations remain unchanged. If the sample size calculation indicates that additional tests are required, then those tests must be performed. The CumSum statistic recalculation must not indicate that the family has exceeded the action limit for two consecutive tests. The manufacturer's final credit report as required by § 91.210 must break out the credits that result from each FEL and corresponding CumSum analysis for each FEL set.

(3) If, at any time during the model year, a manufacturer amends the application for certification for an engine family as specified in paragraph (a) of § 91.122 by modifying its FEL without performing an engine modification, all previous sample size and CumSum statistic calculations for the model year must be recalculated using the new FEL. If the sample size calculation indicates that additional tests are required, then those tests must be performed. The CumSum statistic recalculation must not indicate that the family has exceeded the action limit for two consecutive tests.

(4) If, at any time after the end of the model year but prior to the manufacturer's final credit report submittal as specified in § 91.210, a manufacturer changes an FEL for an entire family, or for an affected part of the year's production, as specified in paragraph (a) of § 91.122, in cases where there were one or more mid-year engine family modifications, all previous sample size and CumSum statistic calculations for the model year, or part of the model year affected by an engine family change, must be recalculated using the new FEL. The sample size equation must not indicate a larger number of

tests than were appropriately performed using the previous FEL and the CumSum statistic recalculation must not exceed the action limit in two consecutive tests. The manufacturer's final credit report as required by §91.210 must break out the credits that result from each FEL and corresponding CumSum analysis for each FEL set.

§91.509 Calculation and reporting of test results.

(a) Initial test results are calculated following the applicable test procedure specified in paragraph (a) of §91.507. The manufacturer rounds these results, in accordance with ASTM E29–93a, to the number of decimal places contained in the applicable emission standard expressed to one additional significant figure. (ASTM E29–93a has been incorporated by reference. See §91.6.)

(b) Final test results are calculated by summing the initial test results derived in paragraph (a) of this section for each test engine, dividing by the number of tests conducted on the engine, and rounding in accordance with ASTM E29–93a to the same number of decimal places contained in the applicable standard expressed to one additional significant figure.

(c) The final deteriorated test results for each test engine are calculated by applying the appropriate deterioration factors, derived in the certification process for the engine family, to the final test results, and rounding in accordance with ASTM E29–93a to the same number of decimal places contained in the applicable standard expressed to one additional significant figure.

(d) If, at any time during the model year, the CumSum statistic exceeds the applicable action limit, H, in two consecutive tests, the engine family may be determined to be in noncompliance and the manufacturer must notify EPA within two working days of such exceedance by the CumSum statistic.

(e) Within 30 calendar days of the end of each quarter, each engine manufacturer must submit to the Administrator a report which includes the following information:

(1) The location and description of the manufacturer's or other's exhaust emission test facilities which were utilized to conduct testing reported pursuant to this section;

(2) Total production and sample sizes, N and n, for each engine family;

(3) The FEL against which each engine family was tested;

(4) A description of the process to obtain engines on a random basis;

(5) A description of the test engines;

(6) For each test conducted,

(i) A description of the test engine, including:

(A) Configuration and engine family identification,

(B) Year, make, and build date,

(C) Engine identification number, and

(D) Number of hours of service accumulated on engine prior to testing;

(ii) Location where service accumulation was conducted and description of accumulation procedure and schedule;

(iii) Test number, date, test procedure used, initial test results before and after rounding, and final test results for all exhaust emission tests, whether valid or invalid, and the reason for invalidation, if applicable;

(iv) A complete description of any adjustment, modification, repair, preparation, maintenance, and/or testing which was performed on the test engine, was not reported pursuant to any other paragraph of this subpart, and will not be performed on all other production engines;

(v) A CumSum analysis, as required in §91.508, of the production line test results for each engine family;

(vi) Any other information the Administrator may request relevant to the determination whether the new engines being manufactured by the manufacturer do in fact conform with the regulations with respect to which the certificate of conformity was issued;

(7) For each failed engine as defined in §91.510(a), a description of the remedy and test results for all retests as required by §91.511(g);

(8) The date of the end of the engine manufacturer's model year production for each engine family; and

(9) The following signed statement and endorsement by an authorized representative of the manufacturer:

This report is submitted pursuant to sections 213 and 208 of the Clean Air Act. This production line testing program was conducted in complete conformance with all applicable regulations under 40 CFR part 91 *et seq*. No emission-related changes to production processes or quality control procedures for the engine family tested have been made during this production line testing program that affect engines from the production line. All data and information reported herein is, to the best of (Company Name) knowledge, true and accurate. I am aware of the penalties associated with violations of the Clean Air Act and the regulations thereunder. (Authorized Company Representative.)

§ 91.510 Compliance with criteria for production line testing.

(a) A failed engine is one whose final deteriorated test results pursuant to § 91.509(c), for HC + NO_X exceeds the applicable Family Emission Limit (FEL).

(b) An engine family may be determined to be in noncompliance, if at any time throughout the model year, the CumSum statistic, C_i, for HC+NO_X. is greater than the action limit, H, for two consecutive tests.

§ 91.511 Suspension and revocation of certificates of conformity.

(a) The certificate of conformity is automatically suspended with respect to any engine failing pursuant to paragraph (a) of § 91.510 effective from the time that testing of that engine is completed.

(b) The Administrator may suspend the certificate of conformity for an engine family which is determined to be in noncompliance pursuant to § 90.510(b). This suspension will not occur before fifteen days after the engine family is determined to be in noncompliance.

(c) If the results of testing pursuant to these regulations indicate that engines of a particular family produced at one plant of a manufacturer do not conform to the regulations with respect to which the certificate of conformity was issued, the Administrator may suspend the certificate of conformity with respect to that family for engines manufactured by the manufacturer at all other plants.

(d) Notwithstanding the fact that engines described in the application for certification may be covered by a certificate of conformity, the Administrator may suspend such certificate immediately in whole or in part if the Administrator finds any one of the following infractions to be substantial:

(1) The manufacturer refuses to comply with any of the requirements of this subpart.

(2) The manufacturer submits false or incomplete information in any report or information provided to the Administrator under this subpart.

(3) The manufacturer renders inaccurate any test data submitted under this subpart.

(4) An EPA enforcement officer is denied the opportunity to conduct activities authorized in this subpart and a warrant or court order is presented to the manufacturer or the party in charge of the facility in question.

(5) An EPA enforcement officer is unable to conduct activities authorized in § 91.505 because a manufacturer has located its facility in a foreign jurisdiction where local law prohibits those activities.

(e) The Administrator shall notify the manufacturer in writing of any suspension or revocation of a certificate of conformity in whole or in part. A suspension or revocation is effective upon receipt of the notification or fifteen days from the time an engine family is determined to be in noncompliance pursuant to § 91.510(b), whichever is later, except that the certificate is immediately suspended with respect to any failed engines as provided for in paragraph (a) of this section.

(f) The Administrator may revoke a certificate of conformity for an engine family after the certificate has been suspended pursuant to paragraph (b) or (c) of this section if the proposed remedy for the nonconformity, as reported by the manufacturer to the Administrator, is one requiring a design change or changes to the engine and/or emission control system as described in the application for certification of the affected engine family.

(g) Once a certificate has been suspended for a failed engine, as provided for in paragraph (a) of this section, the manufacturer must take the following actions before the certificate is reinstated for that failed engine:

(1) Remedy the nonconformity;

(2) Demonstrate that the engine conforms to the Family Emission Limit by retesting the engine in accordance with these regulations; and

(3) Submit a written report to the Administrator, after successful completion of testing on the failed engine, which contains a description of the remedy and test results for each engine in addition to other information that may be required by this part.

(h) Once a certificate for a failed engine family has been suspended pursuant to paragraph (b), (c) or (d) of this section, the manufacturer must take the following actions before the Administrator will consider reinstating the certificate:

(1) Submit a written report to the Administrator which identifies the reason for the noncompliance of the engines, describes the proposed remedy, including a description of any proposed quality control and/or quality assurance measures to be taken by the manufacturer to prevent future occurrences of the problem, and states the date on which the remedies will be implemented.

(2) Demonstrate that the engine family for which the certificate of conformity has been suspended does in fact comply with the regulations of this part by testing as many engines as needed so that the CumSum statistic, as calculated in §91.508(a), falls below the action limit. Such testing must comply with the provisions of this part. If the manufacturer elects to continue testing individual engines after suspension of a certificate, the certificate is reinstated for any engine actually determined to be in conformance with the Family Emission Limits through testing in accordance with the applicable test procedures, provided that the Administrator has not revoked the certificate pursuant to paragraph (f) of this section.

(i) Once the certificate has been revoked for an engine family, if the manufacturer desires to continue introduction into commerce of a modified version of that family, the following actions must be taken before the Administrator may issue a certificate for that modified family:

(1) If the Administrator determines that the proposed change(s) in engine design may have an effect on emission performance deterioration, the Administrator shall notify the manufacturer, within five working days after receipt of the report in paragraph (h)(1) of this section, whether subsequent testing under this subpart will be sufficient to evaluate the proposed change or changes or whether additional testing will be required; and

(2) After implementing the change or changes intended to remedy the nonconformity, the manufacturer must demonstrate that the modified engine family does in fact conform with the regulations of this part by testing as many engines as needed from the modified engine family so that the CumSum statistic, as calculated in §91.508(a) using the newly assigned FEL if applicable, falls below the action limit. When both of these requirements are met, the Administrator shall reissue the certificate or issue a new certificate, as the case may be, to include that family. As long as the CumSum statistic remains above the action limit, the revocation remains in effect.

(j) At any time subsequent to a suspension of a certificate of conformity for a test engine pursuant to paragraph (a) of this section, but not later than 15 days (or such other period as may be allowed by the Administrator) after notification of the Administrator's decision to suspend or revoke a certificate of conformity in whole or in part pursuant to paragraphs (b), (c), or (f) of this section, a manufacturer may request a hearing as to whether the tests have been properly conducted or any sampling methods have been properly applied.

(k) Any suspension of a certificate of conformity under paragraph (d) of this section:

(1) Shall be made only after the manufacturer concerned has been offered an opportunity for a hearing conducted in accordance with §§91.512, 91.513, and 91.514 and

(2) Need not apply to engines no longer in the possession of the manufacturer.

(l) After the Administrator suspends or revokes a certificate of conformity pursuant to this section and prior to the commencement of a hearing under

§ 91.512, if the manufacturer demonstrates to the Administrator's satisfaction that the decision to suspend or revoke the certificate was based on erroneous information, the Administrator shall reinstate the certificate.

(m) To permit a manufacturer to avoid storing non-test engines while conducting subsequent testing of the noncomplying family, a manufacturer may request that the Administrator conditionally reinstate the certificate for that family. The Administrator may reinstate the certificate subject to the following condition: the manufacturer must commit to recall all engines of that family produced from the time the certificate is conditionally reinstated if the CumSum statistic does not fall below the action limit and must commit to remedy any nonconformity at no expense to the owner.

§ 91.512 Request for public hearing.

(a) If the manufacturer disagrees with the Administrator's decision to suspend or revoke a certificate or disputes the basis for an automatic suspension pursuant to § 91.511(a), the manufacturer may request a public hearing.

(b) The manufacturer's request shall be filed with the Administrator not later than 15 days after the Administrator's notification of his or her decision to suspend or revoke, unless otherwise specified by the Administrator. The manufacturer shall simultaneously serve two copies of this request upon the Manager of the Engine Compliance Programs Group and file two copies with the Hearing Clerk for the Agency. Failure of the manufacturer to request a hearing within the time provided constitutes a waiver of the right to a hearing. Subsequent to the expiration of the period for requesting a hearing as of right, the Administrator may, in his or her discretion and for good cause shown, grant the manufacturer a hearing to contest the suspension or revocation.

(c) A manufacturer shall include in the request for a public hearing:

(1) A statement as to which engine configuration(s) within a family is to be the subject of the hearing;

(2) A concise statement of the issues to be raised by the manufacturer at the hearing, except that in the case of the hearing requested under § 91.511(j), the hearing is restricted to the following issues:

(i) Whether tests have been properly conducted (specifically, whether the tests were conducted in accordance with applicable regulations under this part and whether test equipment was properly calibrated and functioning);

(ii) Whether sampling plans and statistical analyses have been properly applied (specifically, whether sampling procedures and statistical analyses specified in this subpart were followed and whether there exists a basis for distinguishing engines produced at plants other than the one from which engines were selected for testing which would invalidate the Administrator's decision under § 91.511(c));

(3) A statement specifying reasons why the manufacturer believes it will prevail on the merits of each of the issues raised; and

(4) A summary of the evidence which supports the manufacturer's position on each of the issues raised.

(d) A copy of all requests for public hearings will be kept on file in the Office of the Hearing Clerk and will be made available to the public during Agency business hours.

§ 91.513 Administrative procedures for public hearing.

(a) The Presiding Officer shall be an Administrative Law Judge appointed pursuant to 5 U.S.C. 3105 (see also 5 CFR part 930 as amended).

(b) The Judicial Officer shall be an officer or employee of the Agency appointed as a Judicial Officer by the Administrator, pursuant to this section, who shall meet the qualifications and perform functions as follows:

(1) *Qualifications.* A Judicial Officer may be a permanent or temporary employee of the Agency who performs other duties for the Agency. The Judicial Officer shall not be employed by the Office of Enforcement and Compliance Assurance or have any connection with the preparation or presentation of evidence for a hearing held pursuant to this subpart. The Judicial Officer shall be a graduate of an accredited law school and a member in good standing

of a recognized Bar Association of any state or the District of Columbia.

(2) *Functions.* The Administrator may consult with the Judicial Officer or delegate all or part of the Administrator's authority to act in a given case under this section to a Judicial Officer, provided that this delegation does not preclude the Judicial Officer from referring any motion or case to the Administrator when the Judicial Officer determines such referral to be appropriate.

(c) For the purposes of this section, one or more Judicial Officers may be designated by the Administrator. As work requires, a Judicial Officer may be designated to act for the purposes of a particular case.

(d) Summary decision. (1) In the case of a hearing requested under §91.511(j), when it clearly appears from the data and other information contained in the request for a hearing that no genuine and substantial question of fact or law exists with respect to the issues specified in §91.512(c)(2), the Administrator may enter an order denying the request for a hearing and reaffirming the original decision to suspend or revoke a certificate of conformity.

(2) In the case of a hearing requested under §91.512 to challenge a suspension of a certificate of conformity for the reason(s) specified in §91.511(d), when it clearly appears from the data and other information contained in the request for the hearing that no genuine and substantial question of fact or law exists with respect to the issue of whether the refusal to comply with this subpart was caused by conditions and circumstances outside the control of the manufacturer, the Administrator may enter an order denying the request for a hearing and suspending the certificate of conformity.

(3) Any order issued under paragraph (d)(1) or (d)(2) of this section has the force and effect of a final decision of the Administrator, as issued pursuant to §91.515.

(4) If the Administrator determines that a genuine and substantial question of fact or law does exist with respect to any of the issues referred to in paragraphs (d)(1) and (d)(2) of this section, the Administrator shall grant the request for a hearing and publish a notice of public hearing in the FEDERAL REGISTER or by such other means as the Administrator finds appropriate to provide notice to the public.

(e) Filing and service. (1) An original and two copies of all documents or papers required or permitted to be filed pursuant to this section and §91.512(c) must be filed with the Hearing Clerk of the Agency. Filing is considered timely if mailed, as determined by the postmark, to the Hearing Clerk within the time allowed by this section and §91.512(b). If filing is to be accomplished by mailing, the documents must be sent to the address set forth in the notice of public hearing referred to in paragraph (d)(4) of this section.

(2) To the maximum extent possible, testimony will be presented in written form. Copies of written testimony will be served upon all parties as soon as practicable prior to the start of the hearing. A certificate of service will be provided on or accompany each document or paper filed with the Hearing Clerk. Documents to be served upon the Manager of the Engine Compliance Programs Group must be sent by registered mail to: Manager, Engine Compliance Programs Group 6403–J, U.S. Environmental Protection Agency, 1200 Pennsylvania Ave., NW., Washington, DC 20460. Service by registered mail is complete upon mailing.

(f) Computation of time. (1) In computing any period of time prescribed or allowed by this section, except as otherwise provided, the day of the act or event from which the designated period of time begins to run is not included. Saturdays, Sundays, and federal legal holidays are included in computing the period allowed for the filing of any document or paper, except that when the period expires on a Saturday, Sunday, or federal legal holiday, the period is extended to include the next following business day.

(2) A prescribed period of time within which a party is required or permitted to do an act is computed from the time of service, except that when service is accomplished by mail, three days will be added to the prescribed period.

(g) Consolidation. The Administrator or the Presiding Officer in his or her discretion may consolidate two or more proceedings to be held under this

section for the purpose of resolving one or more issues whenever it appears that consolidation will expedite or simplify consideration of these issues. Consolidation does not affect the right of any party to raise issues that could have been raised if consolidation had not occurred.

(h) Hearing date. To the extent possible hearings under § 91.512 will be scheduled to commence within 14 days of receipt of the request for a hearing.

§ 91.514 Hearing procedures.

The procedures provided in § 86.1014–84(i) to (s) apply for hearings requested pursuant to § 91.512 regarding suspension, revocation, or voiding of a certificate of conformity.

§ 91.515 Appeal of hearing decision.

The procedures provided in § 86.1014–84(t) to (aa) apply for appeals filed with respect to hearings held pursuant to § 91.514.

§ 91.516 Treatment of confidential information.

Except for information required by § 91.509(e)(2) and § 91.509 (e)(6)(vi), information submitted to EPA pursuant to § 91.509(e) shall be made available to the public upon request by EPA notwithstanding any claim of confidentiality made by the submitter. The provisions for treatment of confidential information described in § 91.7 apply to the information required by § 91.509(e)(2) and all other information submitted pursuant to this subpart.

Subpart G—Selective Enforcement Auditing Regulations

§ 91.601 Applicability.

The requirements of subpart G are applicable to all marine SI engines subject to the provisions of subpart A of part 91.

§ 91.602 Definitions.

The definitions in subpart A and subpart F of this part apply to this subpart. The following definitions also apply to this subpart.

Acceptable quality level (AQL) means the maximum percentage of failing engines that can be considered a satisfactory process average for sampling inspections.

Inspection criteria means the pass and fail numbers associated with a particular sampling plan.

§ 91.603 Applicability of part 91, subpart F.

(a) For purposes of selective enforcement audits conducted under this subpart, marine SI engines subject to provisions of subpart B of this part are subject to regulations specified in subpart F of this part, except:

(1) Section 91.501 does not apply.

(2) Section 91.503 does not apply. See § 91.605.

(3) Section 91.506 does not apply. See § 91.606.

(4) Section 91.507 does not apply. See § 91.607.

(5) Section 91.508 does not apply.

(6) Paragraphs (d) and (e)(6)(v) and references to ''sample sizes, N and n'' of § 91.509 do not apply.

(7) The introductory text in § 91.509 does not apply. The following text applies:

''Within 5 working days after completion of testing of all engines pursuant to a test order.''

(8) The introductory text of § 91.509(e)(9) does not apply. The following text applies:

The following signed statement and endorsement by an authorized representative of the manufacturer:

This report is submitted pursuant to Sections 213 and 208 of the Clean Air Act. This Selective Enforcement Audit was conducted in complete conformance with all applicable regulations under 40 CFR Part 91 *et seq* and the conditions of the test order. No emission-related changes to production processes or quality control procedures for the engine family tested have been made between receipt of the test order and conclusion of the audit. All data and information reported herein is, to the best of (Company Name) knowledge, true and accurate. I am aware of the penalties associated with violations of the Clean Air Act and the regulations thereunder. (Authorized Company Representative.)

(9) Section 91.510 does not apply. See § 91.608.

§ 91.604 Test orders.

(a) A test order addressed to the manufacturer is required for any testing under this subpart.

(b) The test order is signed by the Assistant Administrator for Air and Radiation or his or her designee. The test order must be delivered in person by an EPA enforcement officer or EPA authorized representative to a company representative or sent by registered mail, return receipt requested, to the manufacturer's representative who signed the application for certification submitted by the manufacturer, pursuant to the requirements of the applicable section of subpart B of this part. Upon receipt of a test order, the manufacturer must comply with all of the provisions of this subpart and instructions in the test order.

(c) *Information included in test order.* (1) The test order will specify the engine family to be selected for testing, the manufacturer's engine assembly plant or associated storage facility or port facility (for imported engines) from which the engines must be selected, the time and location at which engines must be selected, and the procedure by which engines of the specified family must be selected. The test order may specify the configuration to be audited and/or the number of engines to be selected per day. Engine manufacturers are required to select a minimum of four engines per day unless an alternate selection procedure is approved pursuant to § 91.606(a), or unless total production of the specified configuration is less than four engines per day. If total production of the specified configuration is less than four engines per day, the manufacturer selects the actual number of engines produced per day.

(2) The test order may include alternate families to be selected for testing at the Administrator's discretion in the event that engines of the specified family are not available for testing because those engines are not being manufactured during the specified time or are not being stored at the specified assembly plant, associated storage facilities, or port of entry.

(3) If the specified family is not being manufactured at a rate of at least two engines per day in the case of manufacturers specified in 40 CFR 89.607(g)(1), or one engine per day in the case of manufacturers specified in 40 CFR 89.607(g)(2), over the expected duration of the audit, the Assistant Administrator or her or his designated representative may select engines of the alternate family for testing.

(4) In addition, the test order may include other directions or information essential to the administration of the required testing.

(d) A manufacturer may submit a list of engine families and the corresponding assembly plants, associated storage facilities, or (in the case of imported engines) port facilities from which the manufacturer prefers to have engines selected for testing in response to a test order. In order that a manufacturer's preferred location be considered for inclusion in a test order for a particular engine family, the list must be submitted prior to issuance of the test order. Notwithstanding the fact that a manufacturer has submitted the list, the Administrator may order selection at other than a preferred location.

(e) Upon receipt of a test order, a manufacturer must proceed in accordance with the provisions of this subpart.

§ 91.605 Testing by the Administrator.

(a) The Administrator may require by test order under § 91.604 that engines of a specified family be selected in a manner consistent with the requirements of § 91.606 and submitted to the Administrator at the place designated for the purpose of conducting emission tests. These tests will be conducted in accordance with § 91.607 to determine whether engines manufactured by the manufacturer conform with the regulations with respect to which the certificate of conformity was issued.

(b) *Designating official data.* (1) Whenever the Administrator conducts a test on a test engine or the Administrator and manufacturer each conduct a test on the same test engine, the results of the Administrator's test comprise the official data for that engine.

(2) Whenever the manufacturer conducts all tests on a test engine, the manufacturer's test data is accepted as the official data, provided that if the

Administrator makes a determination based on testing conducted under paragraph (a) of this section that there is a substantial lack of agreement between the manufacturer's test results and the Administrator's test results, no manufacturer's test data from the manufacturer's test facility will be accepted for purposes of this subpart.

(c) If testing conducted under § 91.604 is unacceptable under paragraph (b)(2) of this section, the Administrator must:

(1) Notify the manufacturer in writing of the Administrator's determination that the test facility is inappropriate for conducting the tests required by this subpart and the reasons therefor; and

(2) Reinstate any manufacturer's data upon a showing by the manufacturer that the data acquired under § 91.604 was erroneous and the manufacturer's data was correct.

(d) The manufacturer may request in writing that the Administrator reconsider the determination in paragraph (b)(2) of this section based on data or information which indicates that changes have been made to the test facility and these changes have resolved the reasons for disqualification.

§ 91.606 Sample selection.

(a) Engines comprising a test sample will be selected at the location and in the manner specified in the test order. If a manufacturer determines that the test engines cannot be selected in the manner specified in the test order, an alternative selection procedure may be employed, provided the manufacturer requests approval of the alternative procedure prior to the start of test sample selection, and the Administrator approves the procedure.

(b) The manufacturer must produce and assemble the test engines of the family selected for testing using its normal production and assembly process for engines to be distributed into commerce. If, between the time the manufacturer is notified of a test order and the time the manufacturer finishes selecting test engines, the manufacturer implements any change(s) in its production or assembly processes, including quality control, which may reasonably be expected to affect the emissions of the engines selected, then the manufacturer must, during the audit, inform the Administrator of such changes. If the test engines are selected at a location where they do not have their operational and emission control systems installed, the test order will specify the manner and location for selection of components to complete assembly of the engines. The manufacturer must assemble these components onto the test engines using normal assembly and quality control procedures as documented by the manufacturer.

(c) No quality control, testing, or assembly procedures will be used on the test engine or any portion thereof, including parts and subassemblies, that have not been or will not be used during the production and assembly of all other engines of that family, unless the Administrator approves the modification in production or assembly procedures pursuant to paragraph (b) of this section.

(d) The test order may specify that an EPA enforcement officer(s) or authorized representative(s), rather than the manufacturer, select the test engines according to the method specified in the test order.

(e) The order in which test engines are selected determines the order in which test results are to be used in applying the sampling plan in accordance with § 91.608.

(f) The manufacturer must keep on hand all untested engines, if any, comprising the test sample until a pass or fail decision is reached in accordance with § 91.608(e). The manufacturer may ship any tested engine which has not failed the requirements as set forth in § 91.608(b). However, once the manufacturer ships any test engine, it relinquishes the prerogative to conduct retests as provided in § 91.607(i).

§ 91.607 Test procedures.

(a)(1) For marine SI engines subject to the provisions of this subpart, the prescribed test procedures are the test procedures as specified in subpart E of this part.

(2) The Administrator may, on the basis of a written application by a manufacturer, prescribe test procedures other than those specified in

paragraph (a)(1) of this section for any marine engine he or she determines is not susceptible to satisfactory testing using the procedures specified in paragraph (a)(1) of this section.

(b)(1) The manufacturer may not adjust, repair, prepare, or modify the engines selected for testing and may not perform any emission tests on engines selected for testing pursuant to the test order unless this adjustment, repair, preparation, modification, and/or tests are documented in the manufacturer's engine assembly and inspection procedures and are actually performed or unless these adjustments and/or tests are required or permitted under this subpart or are approved in advance by the Administrator.

(2) The Administrator may adjust or cause to be adjusted any engine parameter which the Administrator has determined to be subject to adjustment for certification and Selective Enforcement Audit testing in accordance with §91.112, to any setting within the physically adjustable range of that parameter, as determined by the Administrator in accordance with §91.112, prior to the performance of any tests. However, if the idle speed parameter is one which the Administrator has determined to be subject to adjustment, the Administrator may not adjust it to any setting which causes a lower engine idle speed than would have been possible within the physically adjustable range of the idle speed parameter if the manufacturer had accumulated 12 hours of service on the engine under paragraph (c) of this section, all other parameters being identically adjusted for the purpose of the comparison. The manufacturer may be requested to supply information needed to establish an alternate minimum idle speed. The Administrator, in making or specifying these adjustments, may consider the effect of the deviation from the manufacturer's recommended setting on emission performance characteristics as well as the likelihood that similar settings will occur on in-use engines. In determining likelihood, the Administrator may consider factors such as, but not limited to, the effect of the adjustment on engine performance characteristics and information from similar in-use engines.

(c) *Service accumulation*. Prior to performing exhaust emission testing on an SEA test engine, the manufacturer may accumulate on each engine a number of hours of service equal to the greater of 12 hours or the number of hours the manufacturer accumulated during certification on the emission data engine corresponding to the family specified in the test order.

(1) Service accumulation must be performed in a manner using good engineering judgment to obtain emission results representative of normal production engines. This service accumulation must be consistent with the new engine break-in instructions contained in the applicable owner's manual.

(2) The manufacturer must accumulate service at a minimum rate of 6 hours per engine during each 24-hour period, unless otherwise approved by the Administrator.

(i) The first 24-hour period for service begins as soon as authorized checks, inspections, and preparations are completed on each engine.

(ii) The minimum service accumulation rate does not apply on weekends or holidays.

(iii) If the manufacturer's service or target is less than the minimum rate specified (6 hours per day), then the minimum daily accumulation rate is equal to the manufacturer's service target.

(3) Service accumulation must be completed on a sufficient number of test engines during consecutive 24-hour periods to assure that the number of engines tested per day fulfills the requirements of paragraphs (g)(1) and (g)(2) of this section.

(d) The manufacturer may not perform any maintenance on test engines after selection for testing, nor may the Administrator allow deletion of any engine from the test sequence, unless requested by the manufacturer and approved by the Administrator before any engine maintenance or deletion.

(e) The manufacturer must expeditiously ship test engines from the point of selection to the test facility. If the test facility is not located at or in close proximity to the point of selection, the manufacturer must assure that test engines arrive at the test facility within 24 hours of selection. The

Administrator may approve more time for shipment based upon a request by the manufacturer accompanied by a satisfactory justification.

(f) If an engine cannot complete the service accumulation or an emission test because of a malfunction, the manufacturer may request that the Administrator authorize either the repair of that engine or its deletion from the test sequence.

(g) Whenever a manufacturer conducts testing pursuant to a test order issued under this subpart, the manufacturer must notify the Administrator within one working day of receipt of the test order as to which test facility will be used to comply with the test order. If no test cells are available at a desired facility, the manufacturer must provide alternate testing capability satisfactory to the Administrator.

(1) A manufacturer with projected nonroad engine sales for the United States market for the applicable year of 7,500 or greater must complete emission testing at a minimum rate of two engines per 24-hour period, including each voided test and each smoke test.

(2) A manufacturer with projected nonroad engine sales for the United States market for the applicable year of less than 7,500 must complete emission testing at a minimum rate of one engine per 24-hour period, including each voided test and each smoke test.

(3) The Administrator may approve a lower daily rate of emission testing based upon a request by a manufacturer accompanied by a satisfactory justification.

(h) The manufacturer must perform test engine selection, shipping, preparation, service accumulation, and testing in such a manner as to assure that the audit is performed in an expeditious manner.

(i) Retesting. (1) The manufacturer may retest any engines tested during a Selective Enforcement Audit once a fail decision for the audit has been reached in accordance with § 91.608(e).

(2) The Administrator may approve retesting at other times based upon a request by the manufacturer accompanied by a satisfactory justification.

(3) The manufacturer may retest each engine a total of three times. The manufacturer must test each engine or vehicle the same number of times. The manufacturer may accumulate additional service before conducting a retest, subject to the provisions of paragraph (c) of this section.

(j) A manufacturer must test engines with the test procedure specified in subpart E of this part to demonstrate compliance with the exhaust emission standard (or applicable FEL) for $HC+NO_X$. If alternate procedures were used in certification pursuant to § 91.119, then those alternate procedures must be used.

§ 91.608 Compliance with acceptable quality level and passing and failing criteria for selective enforcement audits.

(a) The prescribed acceptable quality level is 40 percent.

(b) A failed engine is one whose final test results pursuant to § 91.509(b), for $HC+NO_X$. exceed the applicable family emission level.

(c) The manufacturer must test engines comprising the test sample until a pass decision is reached for $HC+NO_X$ or a fail decision is reached for $HC+NO_X$. A pass decision is reached when the cumulative number of failed engines, as defined in paragraph (b) of this section, for $HC+NO_X$ is less than or equal to the pass decision number, as defined in paragraph (d) of this section, appropriate to the cumulative number of engines tested. A fail decision is reached when the cumulative number of failed engines for $HC+NO_X$ is greater than or equal to the fail decision number, as defined in paragraph (d) of this section, appropriate to the cumulative number of engines tested.

(d) The pass and fail decision numbers associated with the cumulative number of engines tested are determined by using the tables in Appendix A to this subpart, ''Sampling Plans for Selective Enforcement Auditing of Marine Engines,'' appropriate to the projected sales as made by the manufacturer in its report to EPA under § 91.504(c)(1). In the tables in Appendix A to this subpart, sampling plan ''stage'' refers to the cumulative number of engines tested. Once a pass or fail decision has been made for $HC+NO_X$. the number of engines with

final test results exceeding the emission standard for $HC+NO_X$ shall not be considered any further for the purposes of the audit.

(e) Passing or failing of an SEA occurs when the decision is made on the last engine required to make a decision under paragraph (c) of this section.

(f) The Administrator may terminate testing earlier than required in paragraph (c) of this section.

APPENDIX A TO SUBPART G OF PART 91—SAMPLING PLANS FOR SELECTIVE ENFORCEMENT AUDITING OF MARINE ENGINES

TABLE 1—SAMPLING PLAN CODE LETTER

Annual engine family sales	Code letter
20–50	AA [1]
20–99	A [1]
100–299	B
300–499	C
500 or greater	D

[1] A manufacturer may optionally use either the sampling plan for code letter "AA" or sampling plan for code letter "A" for Selective Enforcement Audits of engine families with annual sales between 20 and 50 engines. Additional, the manufacturers may switch between these plans during the audit.

TABLE 2—SAMPLING PLAN FOR CODE LETTER "AA"

[Sample inspection criteria]

Stage	Pass No.	Fail No.	Stage	Pass No.	Fail No.
1	(1)	(2)	11	4	8
2	(1)	(2)	12	4	9
3	0	(2)	13	5	9
4	0	(2)	14	5	10
5	1	5	15	6	10
6	1	6	16	6	10
7	2	6	17	7	10
8	2	7	18	8	10
9	3	7	19	8	10
10	3	8	20	9	10

[1] Test sample passing not permitted at this stage.
[2] Test sample failure not permitted at this stage.

TABLE 3—SAMPLING PLAN FOR CODE LETTER "A"

[Sample inspection criteria]

Stage	Pass No.	Fail No.	Stage	Pass No.	Fail No.
1	(1)	(2)	16	6	11
2	(1)	(2)	17	7	12
3	(1)	(2)	18	7	12
4	0	(2)	19	8	13
5	0	(2)	20	8	13
6	1	6	21	9	14
7	1	7	22	10	14
8	2	7	23	10	15
9	2	8	24	11	15
10	3	8	25	11	16
11	3	8	26	12	16

TABLE 3—SAMPLING PLAN FOR CODE LETTER "A"—Continued

[Sample inspection criteria]

Stage	Pass No.	Fail No.	Stage	Pass No.	Fail No.
12	4	9	27	12	17
13	5	10	28	13	17
14	5	10	29	14	17
15	6	11	30	16	17

[1] Test sample passing not permitted at this stage.
[2] Test sample failure not permitted at this stage.

TABLE 4—SAMPLING PLAN FOR CODE LETTER "B"

[Sample inspection criteria]

Stage	Pass No.	Fail No.
1	(1)	(2)
2	(1)	(2)
3	(1)	(2)
4	(1)	(2)
5	0	(2)
6	1	6
7	1	7
8	2	7
9	2	8
10	3	8
11	3	9
12	4	9
13	4	10
14	5	10
15	5	11
16	6	12
17	6	12
18	7	13
19	8	13
20	8	14
21	9	14
22	9	15
23	10	15
24	10	16
25	11	16
26	11	17
27	12	17
28	12	18
29	13	18
30	13	19
31	14	19
32	14	20
33	15	20
34	16	21
35	16	21
36	17	22
37	17	22
38	18	22
39	18	22
40	21	22

[1] Test sample passing not permitted at this stage.
[2] Test sample failure not permitted at this stage.

TABLE 5—SAMPLING PLAN FOR CODE LETTER "C"

[Sample inspection criteria]

Stage	Pass No.	Fail No.
1	(1)	(2)
2	(1)	(2)
3	(1)	(2)
4	(1)	(2)

TABLE 5—SAMPLING PLAN FOR CODE LETTER "C"—Continued

[Sample inspection criteria]

Stage	Pass No.	Fail No.
5	0	(2)
6	0	6
7	1	7
8	2	7
9	2	8
10	3	9
11	3	9
12	4	10
13	4	10
14	5	11
15	5	11
16	6	12
17	6	12
18	7	13
19	7	13
20	8	14
21	8	14
22	9	15
23	10	15
24	10	16
25	11	16
26	11	17
27	12	17
28	12	18
29	13	18
30	13	19
31	14	19
32	14	20
33	15	20
34	15	21
35	16	21
36	16	22
37	17	22
38	18	23
39	18	23
40	19	24
41	19	24
42	20	25
43	20	25
44	21	26
45	21	27
46	22	27
47	22	27
48	23	27
49	23	27
50	26	27

[1] Test sample passing not permitted at this stage.
[2] Test sample failure not permitted at this stage.

TABLE 6—SAMPLING PLAN FOR CODE LETTER "D"

[Sample inspection criteria]

Stage	Pass No.	Fail No.
1	(1)	(2)
2	(1)	(2)
3	(1)	(2)
4	(1)	(2)
5	0	(2)
6	0	6
7	1	7
8	2	8
9	2	8
10	3	9
11	3	9
12	4	10
13	4	10

TABLE 6—SAMPLING PLAN FOR CODE LETTER "D"—Continued

[Sample inspection criteria]

Stage	Pass No.	Fail No.
14	5	11
15	5	11
16	6	12
17	6	12
18	7	13
19	7	13
20	8	14
21	8	14
22	9	15
23	9	15
24	10	16
25	11	16
26	11	17
27	12	17
28	12	18
29	13	19
30	13	19
31	14	20
32	14	20
33	15	21
34	15	21
35	16	22
36	16	22
37	17	23
38	17	23
39	18	24
40	18	24
41	19	25
42	19	26
43	20	26
44	21	27
45	21	27
46	22	28
47	22	28
48	23	29
49	23	29
50	24	30
51	24	30
52	25	31
53	25	31
54	26	32
55	26	32
56	27	33
57	27	33
58	28	33
59	28	33
60	32	33

[1] Test sample passing not permitted at this stage.
[2] Test sample failure not permitted at this stage.

[61 FR 52102, Oct. 4, 1996, as amended at 67 FR 68340, Nov. 8, 2002]

Subpart H—Importation of Nonconforming Marine Engines

§ 91.701 Applicability.

(a) Except where otherwise indicated, this subpart is applicable to marine SI engines for which the Administrator has promulgated regulations under this part prescribing emission standards, including engines incorporated into marine vessels or equipment, that are offered for importation or imported

into the United States, but which engines, at the time of importation or being offered for importation are not covered by certificates of conformity issued under section 213 and section 206(a) of the Clean Air Act as amended (that is, which are nonconforming marine engines as defined in §91.702), and this part. Compliance with regulations under this subpart does not relieve any person or entity from compliance with other applicable provisions of the Clean Air Act.

(b) Regulations prescribing further procedures for the importation of marine SI engines and marine vessels or equipment into the customs territory of the United States, as defined in 19 U.S.C. 1202, are set forth in U.S. Customs Service regulations.

§91.702 Definitions.

The definitions in subpart A of this part apply to this subpart. The following definitions also apply to this subpart.

Certificate of conformity. The document issued by the Administrator under section 213 and section 206(a) of the Act.

Nonconforming marine engine. A marine SI engine which is not covered by a certificate of conformity prior to importation or being offered for importation (or for which such coverage has not been adequately demonstrated to EPA). Also, a marine SI engine which was originally covered by a certificate of conformity, but subsequently altered or modified such that it is no longer in a certified configuration.

Original engine manufacturer (OEM). The entity which originally manufactured the marine engine.

United States. United States includes the customs territory of the United States as defined in 19 U.S.C. 1202, and the Virgin Islands, Guam, American Samoa, and the Commonwealth of the Northern Mariana Islands.

§91.703 Admission.

(a) A nonconforming marine SI engine offered for importation may only be imported into the United States under §91.704, provided that an exemption or exclusion is granted by the Administrator. Final admission shall not be granted unless the marine SI engine is exempted or excluded under §91.704.

(b) In order to obtain admission the importer must submit to the Administrator a written request for approval containing the following:

(1) Identification of the importer of the marine SI engine and the importer's address, telephone number, and taxpayer identification number;

(2) Identification of the marine SI engine owner, the owner's address, telephone number, and taxpayer identification number;

(3) Identification of the marine SI engine including make, model, identification number, and original production year;

(4) Information indicating under what provision of these regulations the marine SI engine is to be imported;

(5) Identification of the place(s) where the subject marine SI engine is to be stored;

(6) Authorization for EPA enforcement officers to conduct inspections or testing otherwise permitted by the Act or regulations thereunder; and

(7) Such other information as is deemed necessary by the Administrator.

§91.704 Exemptions and exclusions.

(a) Individuals and businesses are eligible to import nonconforming marine SI engines into the United States only under the provisions of this section.

(b) Notwithstanding other requirements of this subpart, a nonconforming marine SI engine entitled to one of the temporary exemptions of this paragraph may be conditionally admitted into the United States if prior written approval for the conditional admission is obtained from the Administrator. Conditional admission must be under bond. The Administrator may request that the U.S. Customs Service require a specific bond amount to ensure compliance with the requirements of the Act and this subpart. A written request for approval from the Administrator must contain the identification required in §91.703(b) and information that demonstrates that the importer is entitled to the exemption. Noncompliance with provisions of this section may result in the forfeiture of the total amount of the bond or exportation of

the marine engine. The following temporary exemptions are permitted by this paragraph:

(1) *Exemption for repairs or alterations.* Upon written approval by EPA, a person may conditionally import under bond a nonconforming marine SI engine solely for purpose of repair(s) or alteration(s). The marine SI engines may not be operated in the United States other than for the sole purpose of repair or alteration. It may not be sold or leased in the United States and must be exported upon completion of the repair(s) or alteration(s).

(2) *Testing exemption.* A nonconforming test marine SI engine may be conditionally imported under bond by a person subject to the requirements of § 91.1005. A test marine SI engine may be operated in the United States provided that the operation is an integral part of the test. This exemption is limited to a period not exceeding one year from the date of importation unless a request is made by the appropriate importer, and subsequently granted by EPA, concerning the marine engine in accordance with § 91.1005(f) for a subsequent one-year period.

(3) *Display exemptions.* (i) A nonconforming marine engine intended solely for display may be conditionally imported under bond subject to the requirements of § 91.1007.

(ii) A display marine engine may be imported by any person for purposes related to a business or the public interest. Such purposes do not include collections normally inaccessible or unavailable to the public on a daily basis, display of a marine engine at a dealership, private use, or other purpose that the Administrator determines is not appropriate for display exemptions. A display marine engine may not be sold or leased in the United States and may not be operated in the United States except for the operation incident and necessary to the display purpose.

(iii) A temporary display exemption is granted for 12 months or for the duration of the display purpose, whichever is shorter. Extensions of up to 12 months each are available upon approval by the Administrator. In no circumstances, however, may the total period of exemption exceed 36 months.

(c) Notwithstanding any other requirement of this subpart, a marine SI engine may be finally admitted into the United States under this paragraph if prior written approval for such final admission is obtained from the Administrator. A request for approval is to contain the identification information required in § 91.703(b) (except for § 91.703(b)(5)) and information that demonstrates that the importer is entitled to the exemption. The following exemptions are permitted by this paragraph:

(1) *National security exemption.* A nonconforming marine engine may be imported under the national security exemption found at § 91.1008.

(2) *Exemption for marine engines identical to United States certified versions.* (i) Any person (including businesses) is eligible for importing a nonconforming marine SI engine into the United States under the provisions of this paragraph. An exemption will be granted if the applicant demonstrates to the satisfaction of the Administrator that the marine engine:

(A) Is owned by the importer;

(B) Is not offered for importation for the purpose of resale; and

(C) Is proven to be identical, in all material respects, to a marine SI engine of the same or later model year certified by the Original Engine Manufacturer for sale in the United States or is proven to have been modified to be identical, in all material respects, to a marine engine of the same or later model year certified by the OEM for sale in the United States according to complete written instructions provided by the OEM's United States representative, or his/her designee.

(ii) Proof of conformity.

(A) Documentation submitted pursuant to this section for the purpose of proving conformity of individual marine engines is to contain sufficiently organized data or evidence demonstrating that the marine engine identified pursuant to § 91.703(b) is identical, in all material respects, to a marine engine identified in an OEM's application for certification.

(B) If the documentation does not contain all the information required by this part, or is not sufficiently organized, EPA will notify the importer of

any areas of inadequacy and that the documentation will not receive further consideration until the required information or organization is provided.

(C) If EPA determines that the documentation does not clearly or sufficiently demonstrate that a marine engine is eligible for importation under this paragraph, EPA will notify the importer in writing.

(D) If EPA determines that the documentation clearly and sufficiently demonstrates that a marine engine is eligible for importation under this paragraph, EPA will grant approval for final admission in writing.

(d) Foreign diplomatic and military personnel may conditionally import a nonconforming marine engine without bond. At the time of conditional admission, the importer must submit to the Administrator the written report required in §91.703(b) (except for information required by §91.703(b)(5)) and a statement from the U.S. Department of State confirming qualification for this exemption. Foreign military personnel may, in lieu of a statement from the U.S. Department of State, submit to the Administrator a copy of their orders for duty in the United States. The marine SI engine may not be sold or leased in the United States and must be exported if the individual's diplomatic status or the foreign military orders for duty in the U.S. are no longer applicable, as determined by the Department of State, unless subsequently brought into conformity with U.S. emission requirements in accordance with §91.704(c)(2).

(e) Competition exclusion. A nonconforming marine engine may be conditionally imported by any person provided the importer demonstrates to the Administrator that the marine engine is used to propel a marine vessel used solely for competition and obtains prior written approval from the Administrator. A nonconforming engine imported pursuant to this paragraph may not be operated in the United States except for that operation incident and necessary for the competition purpose, unless subsequently brought into conformity with United States emission requirements in accordance with §91.704(c)(2).

(f) An application for exemption and exclusion provided for in paragraphs (b), (c), and (e) of this section shall be mailed to: U.S. Environmental Protection Agency, Office of Mobile Sources, Engine Programs & Compliance Division (6403–J), 1200 Pennsylvania Ave., NW., Washington, DC 20460, Attention: Imports.

§91.705 Prohibited acts; penalties.

(a) The importation of a marine SI engine, including a marine engine incorporated into marine vessels or equipment, which is not covered by a certificate of conformity other than in accordance with this subpart and the entry regulations of the U.S. Customs Service is prohibited. Failure to comply with this section is a violation of §91.1103(a)(1) and section 213(d) of the Act.

(b) Unless otherwise permitted by this subpart, during a period of conditional admission, the importer of a marine engine may not:

(1) Register, license, or operate the marine engine in the United States;

(2) Sell or lease or offer the marine engine for sale or lease;

(c) A marine SI engine conditionally admitted pursuant to §91.704 (b), (d) or (e) and not granted final admission by the end of the period of conditional admission, or within such additional time as the Administrator and the U.S. Customs Service may allow, is deemed to be unlawfully imported into the United States in violation of §91.1103(a)(1), section 213(d) and section 203 of the Act, unless the marine engine has been delivered to the U.S. Customs Service for export or other disposition under applicable Customs laws and regulations. A marine SI engine not so delivered is subject to seizure by the U.S. Customs Service.

(d) An importer who violates §91.1103(a)(1), section 213(d) and section 203 of the Act is subject to a civil penalty under §91.1106 and section 205 of the Act of not more than $32,500 for each marine engine subject to the violation. In addition to the penalty provided in the Act, where applicable, a person or entity who imports an engine under the exemption provisions of §91.704(b) and, who fails to deliver the marine engine to the U.S. Customs

Service by the end of the period of conditional admission is liable for liquidated damages in the amount of the bond required by applicable Customs laws and regulations. The maximum penalty value listed in this paragraph (d) is shown for calendar year 2004. Maximum penalty limits for later years may be adjusted based on the Consumer Price Index. The specific regulatory provisions for changing the maximum penalties, published in 40 CFR part 19, reference the applicable U.S. Code citation on which the prohibited action is based.

[61 FR 52102, Oct. 4, 1996, as amended at 70 FR 40452, July 13, 2005]

§ 91.706 Treatment of confidential information.

The provisions for treatment of confidential information as described in § 91.7 apply.

Subpart I—In-Use Testing and Recall Regulations

§ 91.801 Applicability.

The requirements of subpart I are applicable to all marine SI engines subject to the provisions of subpart A of part 91.

(a) Marine engines subject to provisions of subpart B of this part are subject to recall regulations specified in 40 CFR part 85, subpart S, except for the items set forth in this subsection.

(b) Reference to section 214 of the Clean Air Act in 40 CFR 85.1801(a) does not apply. Reference to section 216 of the Clean Air Act does apply.

(c) Reference to section 202 of the Act in 40 CFR 85.1802(a) does not apply. Reference to section 213 of the Act does apply.

(d) Reference to ''family particulate emission limits as defined in Part 86 promulgated under section 202 of the Act'' in 40 CFR 85.1803(a) and 85.1805(a)(1) does not apply. Family emission limits as defined in 40 CFR part 89 promulgated under section 213 of the Act does apply.

(e) Add the following paragraph to 40 CFR 85.1805 (a)(9): A telephone number provided by the manufacturer, which may be used to report difficulty in obtaining recall repairs.

(f) The requirements of the Manufacturer In-use testing program set forth in §§ 91.803 through 91.805 are waived for existing technology OB/PWC as defined in § 91.3 through model year 2003.

(1) The Administrator has the discretion to waive the requirements of the Manufacturer In-use testing program set forth in sections 91.803 through 91.805 for existing technology OB/PWC for a specific engine family up to model year 2005 if, upon the request of the manufacturer, the Administrator determines that the engine family will be phased out of U.S. production by model year 2005. As a condition to receiving such a waiver for either model year 2004 or 2005 or both, the manufacturer must discontinue U.S. production according to the schedule upon which the Administrator based the waiver. Failure to do so by the manufacturer will void *ab initio* the certificate of conformity.

(2) A manufacturer request under paragraph (f)(1) of this section must be in writing and must apply to a specific engine family. The request must identify the engine family designation, the schedule for phasing the engine family out of U.S. production, and any other information the Administrator may require.

§ 91.802 Definitions.

(a) For the purposes of this subpart, except as otherwise provided, the definitions in subpart A of this part apply to this subpart.

(b) The definitions of 40 CFR Part 85, subpart S, § 85.1801 also apply to this Part.

§ 91.803 Manufacturer in-use testing program.

(a) EPA shall annually identify engine families and those configurations within families which the manufacturers must then subject to in-use testing. For each model year, EPA may identify the following number of engine families for testing, based on the number of the manufacturer's engine families to which this subpart is applicable produced in that model year:

(1) For manufactures with three or fewer engine families, EPA may identify a single engine family.

(2) For manufacturers with four or more engine families, EPA may identify a number of engine families that is no greater than twenty-five percent of the number of engine families to which this subpart is applicable that are produced by the manufacturer in that model year.

(b) For each engine family identified by EPA, engine manufacturers shall perform emission testing of an appropriate sample of in-use engines from each engine family. Manufacturers shall submit data from this in-use testing to EPA.

(c) *Number of engines to be tested.* An engine manufacturer shall test in-use engines from each engine family identified by EPA. Engines to be tested shall have accumulated between half and three-quarters of the family's useful life. The number of engines to be tested by a manufacturer will be determined by the following method:

(1) A minimum of four (4) engines per family provided that no engine fails any standard. For each failing engine, two more engines shall be tested until the total number of engines equals ten (10).

(2) For engine families of less than 500 engines for the identified model year or for engine manufacturers who make less than or equal to 2,000 for that model year, a minimum of two (2) engines per family provided that no engine fails any standard. For each failing engine, two more engines shall be tested until the total number of engines equals ten (10).

(3) If an engine family was certified using carry over emission data and has been previously tested under paragraph (c) (1) or (2) of this section (and EPA has not ordered a recall for that family), then only one engine for that family must be tested. If that one engine fails any pollutant, testing must be conducted as outlined at paragraph (c) (1) or (2) of this section, whichever is appropriate.

(d) At the discretion of the Administrator, an engine manufacturer may test more engines than the minima described in paragraph (c) of this section or may concede failure before testing a total of ten (10) engines.

(e) The Administrator will consider failure rates, average emission levels and the existence of any defects among other factors in determining whether to pursue remedial action under this subpart. The Administrator may order a recall pursuant to §§91.807–91.814 before testing reaches the tenth engine.

(f) The Administrator may approve an alternative to manufacturer in-use testing, where:

(1) Engine family production is less than or equal to 200 per year; or

(2) Engines cannot be obtained for testing because they are used substantially in craft which are not conducive to engine removal such as large vessels where the engine can not be removed without dismantling either the engine or the vessel; or

(3) Other compelling circumstances associated with the structure of the industry and uniqueness of marine engine applications. Such alternatives shall be designed to determine whether the engine family is in compliance in-use.

(g) *Collection of in-use engines.* The engine manufacturer shall procure in-use engines which have been operated for between half and three-quarters of the engine's useful life. The engine manufacturer may test engines from more than one model year in a given year. The manufacturer shall begin testing within twelve calendar months after receiving notice that EPA has identified a particular engine family for testing and shall complete testing of such engine family within twelve calendar months from the start of such testing. Test engines may be procured from sources associated with the engine manufacturer (i.e., manufacturer established fleet engines, etc.) or from sources not associated with the manufacturer (i.e., consumer-owned engines, independently-owned fleet engines, etc.).

[61 FR 52102, Oct. 4, 1996, as amended at 67 FR 68340, Nov. 8, 2002]

§91.804 Maintenance, procurement and testing of in-use engines.

(a) A test engine must have a maintenance and use history representative of actual in-use conditions.

(1) To comply with this requirement a manufacturer must obtain information from the end users regarding the

accumulated usage, maintenance, operating conditions, and storage of the test engines.

(2) Documents used in the procurement process must be maintained as required in § 91.121.

(b) The manufacturer may perform minimal set-to-spec maintenance on components of a test engine that are not subject to parameter adjustment. Maintenance may include only that which is listed in the owner's instructions for engines with the amount of service and age of the acquired test engine. Documentation of all maintenance and adjustments shall be maintained and retained as required by § 91.121.

(c) At least one valid emission test, according to the test procedure outlined in subpart E of this part, is required for each in-use engine.

(d) The Administrator may waive portions or requirements of the test procedure, if any, that are not necessary to determine in-use compliance.

(e) If a selected in-use engine fails to comply with any applicable emission standards, the manufacturer shall determine the reason for noncompliance. The manufacturer must report all such reasons of noncompliance within fifteen days of completion of testing.

§ 91.805 In-use test program reporting requirements.

(a) The manufacturer shall electronically submit to the Administrator within three (3) months of completion of testing all emission testing results generated from the in-use testing program. The following information must be reported for each test engine:

(1) Engine family,

(2) Model,

(3) Engine serial number,

(4) Date of manufacture,

(5) Estimated hours of use,

(6) Date and time of each test attempt,

(7) Results (if any) of each test attempt,

(8) Results of all emission testing,

(9) Summary of all maintenance and/or adjustments performed,

(10) Summary of all modifications and/or repairs,

(11) Determinations of noncompliance.

(b) The manufacturer must electronically submit the results of its in-use testing with a pre-approved information heading. The Administrator may exempt manufacturers from this requirement upon written request with supporting justification.

(c) All testing reports and requests for approvals made under this subpart shall be addressed to: Manager, Engine Compliance Programs Group 6403–J, U.S. Environmental Protection Agency, 1200 Pennsylvania Ave., NW., Washington, DC 20460.

(d) The Administrator may approve and/or require modifications to a manufacturer's in-use testing programs.

§ 91.806 Voluntary emissions recall.

(a) Prior to an EPA ordered recall, the manufacturer may perform a voluntary emissions recall pursuant to regulations at § 91.904 of this part. Such manufacturer is subject to the reporting requirements at § 91.905 of this part.

(b) Once EPA determines that a substantial number of engines fail to conform with the requirements of section 213 of the Act or this part, the manufacturer will not have the option of a voluntary emissions recall.

Subpart J—Emission-related Defect Reporting Requirements, Voluntary Emission Recall Program

§ 91.901 Applicability.

The requirements of this subpart J are applicable to all marine engines subject to the provisions of subpart A of this part 91. The requirement to report emission-related defects affecting a given class or category of engines remains applicable for five years from the end of the model year in which such engines were manufactured.

§ 91.902 Definitions.

The definitions in subpart A of this part apply to this subpart.

§ 91.903 Applicability to part 85, subpart T.

(a) Marine SI engines subject to provisions of subpart A of this part are subject to emission defect reporting requirements specified in 40 CFR Part 85,

subpart T, except for the items set forth in this section.

(b) 40 CFR 85.1901 does not apply. See § 91.901.

(c) Reference to the Clean Air Act, 42 U.S.C. 1857 in 40 CFR 85.1902(a) does not apply. Reference to the Clean Air Act, 42 U.S.C. 7401 does apply.

(d) Reference to the ''approved Application for Certification required by 40 CFR 86.077–22 and like provisions of Part 85 and Part 86 of Title 40 of the Code of Federal Regulations'' does not apply. Reference to the approved application for certification required by 91.108 and like provisions of Part 91 does apply.

(e) Reference to section 202(d) of the Act in § 85.1902(c) does not apply. Reference to section 202(d) and section 213 of the Act does apply.

(f) Reference to section 214 of the Act in § 85.1902(e) and (f) does not apply. Reference to section 216 of the Act does apply.

§ 91.904 Voluntary emission recall.

(a) A manufacturer, prior to initiating a voluntary emission recall program, must submit to the EPA the following information for a 15 day review and comment period:

(1) A description of each class or category of engines recalled, including the number of engines to be recalled, the model year, and such other information as may be required to identify the engines recalled;

(2) A description of the specific modifications, alterations, repairs, corrections, adjustments, or other changes to be made to correct the engines affected by the emission-related defect;

(3) A description of the method by which the manufacturer will notify engine owners including copies of any letters of notification to be sent to engine owners;

(4) A description of the proper maintenance or use, if any, upon which the manufacturer conditions eligibility for repair under the recall plan, and a description of the proof to be required of an engine owner to demonstrate compliance with any such conditions;

(5) A description of the procedure to be followed by engine owners to obtain correction of the nonconformity. This may include designation of the date on or after which the owner can have the nonconformity remedied, the time reasonably necessary to perform the labor to remedy the defect, and the designation of facilities at which the defect can be remedied;

(6) A description of the class of persons other than dealers and authorized warranty agents of the manufacturer who will remedy the defect; and

(7) A description of the system by which the manufacturer will assure that an adequate supply of parts is available to perform the repair under the plan.

(b) The manufacturer must submit at least one report on the progress of the recall campaign. This report is submitted one year from the date notification begins and includes the following information:

(1) The methods used to notify both engine owners, dealers and other individuals involved in the recall campaign;

(2) The number of engines known or estimated to be affected by the emission-related defect and an explanation of the means by which this number was determined;

(3) The number of engines actually receiving repair under the plan;

(4) The number of engine owners, dealers, and other individuals involved in the recall campaign that have been notified and the number of engines that have actually received repair; and

(5) The number of engines determined to be ineligible for remedial action due to a failure to properly maintain or use such engines.

§ 91.905 Reports, voluntary recall plan filing, record retention.

(a) The defect report, voluntary recall plan, and the voluntary recall progress report shall be sent to: Manager, Engine Compliance Programs Group 6403–J, Environmental Protection Agency, 1200 Pennsylvania Ave., NW., Washington, DC 20460.

(b) The information gathered by the manufacturer to compile the reports must be retained for not less than five years from the date of the manufacture of the engines and must be made available to duly authorized officials of the EPA upon request.

§ 91.906 Responsibility under other legal provisions preserved.

The filing of any report under the provisions of this subpart will not affect a manufacturer's responsibility to file reports or applications, obtain approval, or give notice under any provision of law.

§ 91.907 Disclaimer of production warranty applicability.

(a) The act of filing an Emission Defect Information Report is inconclusive as to the existence of a defect subject to the warranty provided by section 207(a) of the Act.

(b) A manufacturer may include on each page of its Emission Defect Information Report a disclaimer stating that the filing of a Defect Information Report pursuant to these regulations is not conclusive as to the applicability of the warranty provided by subpart M of this part.

Subpart K—Exclusion and Exemption of Marine SI Engines

§ 91.1001 Applicability.

The requirements of this subpart K are applicable to all marine spark-ignition propulsion engines subject to the provisions of subpart A of this part 91.

§ 91.1002 Definitions.

The definitions in subpart A of this part apply to this subpart. The following definitions also apply to this subpart:

Exemption means exemption from the prohibitions of § 91.1103.

Export exemption means an exemption granted under § 91.1104(b) for the purpose of exporting new marine SI engines.

National security exemption means an exemption which may be granted under § 91.1104(b) for the purpose of national security.

Manufacturer-owned marine engine means an uncertified marine SI engine owned and controlled by a marine SI engine manufacturer and used in a manner not involving lease or sale by itself or in a marine vessel or piece of equipment employed from year to year in the ordinary course of business for product development, production method assessment, or market promotion purposes.

Testing exemption means an exemption which may be granted under § 91.1104(b) for the purpose of research, investigations, studies, demonstrations or training, but not including national security.

§ 91.1003 Exclusions based on section 216(10) of the Act.

(a) For the purpose of determining the applicability of section 216(10) of the Act, any marine SI engine as that term is defined in subpart A of this part, is deemed a nonroad engine.

(b) EPA will maintain a list of models of marine SI engines, and the marine vessels which use such engines, that have been determined to be excluded because they are used solely for competition. This list will be available to the public and may be obtained by writing to the following address: Group Manager, Engine Compliance Programs Group, Engine Programs and Compliance Division (6403J), Environmental Protection Agency, 1200 Pennsylvania Ave., NW., Washington, DC 20460.

(c) Upon written request with supporting documentation, EPA will make written determinations as to whether certain engines are or are not marine SI engines. Engines that are determined not to be marine SI engines are excluded from regulations under this part but may be subject to regulations under another part.

§ 91.1004 Who may request an exemption.

(a) Any person may request a testing exemption under § 91.1005.

(b) Any marine SI engine manufacturer may request a national security exemption under § 91.1008.

(c) For marine SI engine manufacturers, marine SI engines for export purposes are exempt without application, subject to the provisions of § 91.1009.

(d) For eligible manufacturers, as determined by § 91.1006, manufacturer-owned marine SI engines are exempt without application, subject to the provisions of § 91.1006.

(e) For any person, display marine SI engines are exempt without application, subject to the provisions of § 91.1007.

§91.1005 Testing exemption.

(a) Any person requesting a testing exemption must demonstrate the following:

(1) That the proposed test program has a purpose which constitutes an appropriate basis for an exemption in accordance with §91.1104(b);

(2) That the proposed test program necessitates the granting of an exemption;

(3) That the proposed test program is reasonable in scope; and

(4) That the proposed test program exhibits a degree of control consonant with the purpose of the program and the EPA's monitoring requirements.

(5) Paragraphs (b), (c), (d), and (e) of this section describe what constitutes a sufficient demonstration for each of the four identified elements.

(b) With respect to the purpose of the proposed test program, an appropriate purpose would be research, investigations, studies, demonstrations, or training, but not national security. A concise statement of purpose is a required item of information.

(c) With respect to the necessity that an exemption be granted, necessity arises from an inability to achieve the stated purpose in a practicable manner without performing or causing to be performed one or more of the prohibited acts under §91.1103. In appropriate circumstances, time constraints may be a sufficient basis for necessity, but the cost of certification alone, in the absence of extraordinary circumstances, is not a basis for necessity.

(d) With respect to reasonableness, a test program must exhibit a duration of reasonable length and affect a reasonable number of engines. In this regard, required items of information include:

(1) An estimate of the program's duration.

(2) The maximum number of marine engines involved.

(e) With respect to control, the test program must incorporate procedures consistent with the purpose of the test and be capable of affording EPA monitoring capability. As a minimum, required items of information include:

(1) The technical nature of the test;

(2) The site of the test;

(3) The duration and accumulated engine operation associated with the test;

(4) The ownership arrangement with regard to the engines involved in the test;

(5) The intended final disposition of the engines;

(6) The manner in which the engine identification numbers will be identified, recorded, and made available; and

(7) The means or procedure whereby test results will be recorded.

(f) A manufacturer of new marine SI engines may request a testing exemption to cover marine SI engines intended for use in test programs planned or anticipated over the course of a subsequent one-year period. Unless otherwise required by the Manager, Engine Compliance Programs Group, a manufacturer requesting such an exemption need only furnish the information required by paragraphs (a)(1) and (d)(2) of this section along with a description of the recordkeeping and control procedures that will be employed to assure that the engines are used for purposes consistent with section 91.1104(b).

§91.1006 Manufacturer-owned exemption and precertification exemption.

(a) Except as provided in paragraph (b) of this section, any manufacturer-owned marine SI engine, as defined by §91.1002, is exempt from compliance with §91.1103, without application, if the manufacturer complies with the following terms and conditions:

(1) The manufacturer must establish, maintain, and retain the following adequately organized and indexed information on each exempted engine:

(i) Engine identification number,

(ii) Use of the engine on exempt status and

(iii) Final disposition of any engine removed from exempt status.

(2) The manufacturer must provide right of entry and access to these records to EPA authorized representatives as outlined in §91.505.

(3) Unless the requirement is waived or an alternative procedure is approved by the Director, Engine Programs & Compliance Division, the manufacturer must permanently affix a label to each marine engine on exempt status. This label should:

(i) Be affixed in a readily visible portion of the engine,

(ii) Be attached in such a manner that it cannot be removed without destruction or defacement,

(iii) State in the English language/and in block letters and numerals of a color that contrasts with the background of the label, the following information:

(A) The label heading ''Emission Control Information;''

(B) Full corporate name and trademark of manufacturer;

(C) Engine displacement, engine family identification, and model year of engine; or person or office to be contacted for further information about the engine;

(D) The statement ''This marine SI engine is exempt from the prohibitions of 40 CFR 91.1103.''

(4) No provision of paragraph (a)(3) of this section prevents a manufacturer from including any other information it desires on the label.

§ 91.1007 Display exemption.

An uncertified marine SI engine is a display engine when it is to be used solely for display purposes, will only be operated incident and necessary to the display purpose, and will not be sold unless an applicable certificate of conformity has been received or the engine has been finally admitted pursuant to subpart H of this part. A display engine is exempt without application.

§ 91.1008 National security exemption.

(a)(1) Any marine SI engine, otherwise subject to this part, which is used in a vessel that exhibits substantial features ordinarily associated with military combat such as armor and/or permanently affixed weaponry and which will be owned and/or used by an agency of the Federal government with responsibility for national defense, will be exempt from these regulations for purposes of national security. No request for exemption is necessary.

(2) Manufacturers may request a national security exemption for any marine SI engine, otherwise subject to this part, which does not meet the conditions described in paragraph (a)(1) of this section. A manufacturer requesting a national security exemption must state the purpose for which the exemption is required and the request must be endorsed by an agency of the federal government charged with responsibility for national defense.

(b) EPA will maintain a list of models of marine SI engines (and the vessels which use them) that have been granted a national security exemption under paragraph (a)(2) of this section. This list will be available to the public and may be obtained by writing to the following address: Manager, Engine Compliance Programs Group 6403–J, Environmental Protection Agency, 1200 Pennsylvania Ave., NW., Washington, DC 20460.

§ 91.1009 Export exemptions.

(a) A new marine SI engine intended solely for export, and so labeled or tagged on the outside of the container and on the engine itself, is subject to the provisions of § 91.1103, unless the importing country has emission standards for new marine engines which differ from EPA standards.

(b) For the purpose of paragraph (a) of this section, a country having no standards, whatsoever, is deemed to be a country having emission standards which differ from EPA standards.

(c) EPA will maintain a list of foreign countries that have in force marine SI emission standards identical to U.S. EPA standards and have so notified EPA. This list may be obtained by writing to the following address: Manager, Engine Compliance Programs Group 6403–J, Environmental Protection Agency, 1200 Pennsylvania Ave., NW., Washington, DC 20460. New marine SI engines exported to such countries must comply with EPA certification regulations.

(d) It is a condition of any exemption for the purpose of export under § 91.1004(b) that such exemption be void *ab initio* with respect to a new marine SI engine intended solely for export if such marine SI engine is sold, or offered for sale, to an ultimate purchaser in the United States for purposes other than export.

§ 91.1010 Granting of exemptions.

(a) If upon completion of the review of an exemption request made pursuant to § 91.1005 or § 91.1008, EPA determines

it is appropriate to grant such an exemption, a memorandum of exemption will be prepared and submitted to the person requesting the exemption. The memorandum shall set forth the basis for the exemption, its scope, and such terms and conditions as are deemed necessary. Such terms and conditions shall generally include, but are not limited to, agreements by the applicant to conduct the exempt activity in the manner described to EPA, create and maintain adequate records accessible to EPA at reasonable times, employ labels for the exempt engines setting forth the nature of the exemption, take appropriate measures to assure that the terms of the exemption are met, and advise EPA of the termination of the activity and the ultimate disposition of the engines.

(b) Any exemption granted pursuant to paragraph (a) of this section is deemed to cover any subject engine only to the extent that the specified terms and conditions are complied with. A breach of any term or condition causes the exemption to be void *ab initio* with respect to any engine. Consequently, the causing or the performing of an act prohibited under §91.1103(a) (1) or (3), other than in strict conformity with all terms and conditions of this exemption renders the person to whom the exemption is granted, and any other person to whom the provisions of §91.1103 are applicable, liable under sections 204 and 205 of the Act.

§91.1011 Submission of exemption requests.

Requests for exemption or further information concerning exemptions and/or the exemption request review procedure should be addressed to: Manager, Engine Compliance Programs Group 6403J, Environmental Protection Agency, 1200 Pennsylvania Ave., NW., Washington, DC 20460.

§91.1012 Treatment of confidential information.

The provisions for treatment of confidential information described in §91.7 apply to this subpart.

§91.1013 Exemption for certified Small SI engines.

The provisions of 40 CFR 1045.605 and 1045.610 apply for engines subject to the standards of this part 91. This generally allows manufacturers to use marine engines that have been certified to emission standards for nonroad spark-ignition engines below 19 kW without recertifying those engines under this part 91.

[73 FR 59183, Oct. 8, 2008]

Subpart L—Prohibited Acts and General Enforcement Provisions

§91.1101 Applicability.

The requirements of subpart L are applicable to all marine engines and vessels subject to the provisions of subpart A of this part 91.

§91.1102 Definitions.

The definitions in subpart A of this part apply to this subpart. All terms not defined herein or in subpart A have the meaning given them in the Act.

§91.1103 Prohibited acts.

(a) The following acts and the causing thereof are prohibited:

(1)(i) In the case of a manufacturer of new marine SI engines or vessels for distribution in commerce, the sale, the offering for sale, or the introduction, or delivery for introduction, into commerce, of any new marine SI engine manufactured after the applicable effective date under this part unless such engine is covered by a certificate of conformity issued (and in effect) under regulations found in this part.

(ii) In the case of any person, except as provided by regulation of the Administrator, the importation into the United States of any new marine SI engine manufactured after the applicable effective date under this part unless such engine is covered by a certificate of conformity issued (and in effect) under regulations found in this part.

(2)(i) For a person to fail or refuse to permit access to or copying of records or to fail to make reports or provide information required under §91.1104.

(ii) For a person to fail or refuse to permit entry, testing or inspection authorized under §91.118, 91.505 or 91.1104.

(iii) For a person to fail or refuse to perform tests, or to have tests performed as required under § 91.118 or § 91.1104.

(iv) For a person to fail to establish or maintain records as required under § 91.1104.

(3)(i) For a person to remove or render inoperative a device or element of design installed on or in a marine engine in compliance with regulations under this part prior to its sale and delivery to the ultimate purchaser, or for a person knowingly to remove or render inoperative such a device or element of design after the sale and delivery to the ultimate purchaser; or

(ii) For a person to manufacture, sell or offer to sell, or install, a part or component intended for use with, or as part of, a marine SI engine, where a principal effect of the part or component is to bypass, defeat, or render inoperative a device or element of design installed on or in a marine SI engine in compliance with regulations issued under this part, and where the person knows or should know that the part or component is being offered for sale or installed for this use or put to such use.

(4) For a manufacturer of a new marine SI engine subject to standards prescribed under this part:

(i) To sell, offer for sale, or introduce or deliver into commerce, a marine SI engine unless the manufacturer has complied with the requirements of § 91.1203.

(ii) To sell, offer for sale, or introduce or deliver into commerce, a marine SI engine unless a label or tag is affixed to the engine in accordance with regulations under this part.

(iii) To provide directly or indirectly in any communication to the ultimate purchaser or a subsequent purchaser that the coverage of a warranty under the Act is conditioned upon use of a part, component, or system manufactured by the manufacturer or a person acting for the manufacturer or under its control, or conditioned upon service performed by such persons, except as provided in subpart M of this part.

(iv) To fail or refuse to comply with the terms and conditions of the warranty under subpart M of this part.

(5) For a manufacturer of new marine vessels or equipment to distribute in commerce, sell, offer for sale, or introduce into commerce, marine vessels or equipment which contain an engine not covered by a certificate of conformity.

(b) For the purposes of enforcement of this part, the following apply:

(1) Nothing in paragraph (a) of this section is to be construed to require the use of manufacturer parts in maintaining or repairing a marine SI engine.

(2) Actions for the purpose of repair or replacement of a device or element of design or any other item are not considered prohibited acts under § 91.1103(a) if the actions are a necessary and temporary procedure, the device or element is replaced upon completion of the procedure, and the action results in the proper functioning of the device or element of design.

(3) The following provisions apply for converting marine SI engines to use alternative fuels:

(i) Until December 31, 2009, converting an engine to use a clean alternative fuel (as defined in Title II of the Act) is not considered a prohibited act under paragraph (a) of this section if the engine complies with the applicable standard when operating on the alternative fuel. Also, in the case of engines converted to dual fuel or flexible use, the action must result in the proper functioning of the engine when it operates on conventional fuel.

(ii) The provisions of 40 CFR 1045.645 apply starting January 1, 2010.

(4) A new marine spark-ignition engine intended solely to replace an engine in an outboard engine, or other engine to which this part is applicable as determined by §§ 91.1, 91.101, 91.106 that was originally produced with an engine manufactured prior to the applicable implementation date as described in §§ 91.2, and 91.106 and 91.205(a)(1), or that was originally produced in a model year in which less stringent emission standards under this part were in effect shall not be subject to the requirements of § 91.106 or the prohibitions of paragraph (a)(1) of this section provided that:

(i) The engine manufacturer has ascertained that no engine produced by

itself or the manufacturer of the engine that is being replaced, if different, and certified to the requirements of this subpart, is available with the appropriate physical or performance characteristics to repower the outboard, personal watercraft or jetboat; and

(ii) Unless an alternative control mechanism is approved in advance by the Administrator, the engine manufacturer or its agent takes ownership and possession of the engine being replaced; and

(iii) The replacement engine is clearly labeled with the following language, or similar alternate language approved in advance by the Administrator:

This engine does not comply with Federal nonroad or on-highway emission requirements. Sale or installation of this engine for any purpose other than as a replacement engine in a marine vessel whose original engine was not certified, or was certified to less stringent emission standards than those that apply to the year of manufacture of this engine, is a violation of Federal law subject to civil penalty; and

(iv) Where the replacement engine is intended to replace an engine built after the applicable implementation date as described in §§91.2, 91.106 and 91.205(a)(1), but built to less stringent emission standards than are currently applicable, the replacement engine shall be identical in all material respects to a certified configuration of the same or later model year as the engine being replaced; and

(v) In cases where an engine is to be imported for replacement purposes under the provisions of this paragraph (b)(4), the term ''engine manufacturer'' does not apply to an individual or other entity that does not possess a current Certificate of Conformity issued by EPA under this part.

[61 FR 52102, Oct. 4, 1996, as amended at 62 FR 42644, Aug. 7, 1997; 65 FR 24314, Apr. 25, 2000; 73 FR 59183, Oct. 8, 2008]

§91.1104 General enforcement provisions.

(a) *Information collection provisions.* (1) Every manufacturer of new marine SI engines and other persons subject to the requirements of this part must establish and maintain records, perform tests where such testing is not otherwise reasonably available under this part, make reports and provide information the Administrator may reasonably require to determine whether the manufacturer or other person has acted or is acting in compliance with this part or to otherwise carry out the provisions of this part, and must, upon request of an officer or employee duly designated by the Administrator, permit the officer or employee at reasonable times to have access to and copy such records.

(2) For purposes of enforcement of this part, an officer or employee duly designated by the Administrator, upon presenting appropriate credentials, is authorized:

(i) To enter, at reasonable times, any establishment of the manufacturer, or of any person whom the manufacturer engaged to perform any activity required under paragraph (a)(1) of this section, for the purposes of inspecting or observing any activity conducted pursuant to paragraph (a)(1) of this section, and

(ii) To inspect records, files, papers, processes, controls, and facilities used in performing an activity required by paragraph (a)(1) of this section, by the manufacturer or by a person whom the manufacturer engaged to perform the activity.

(b) *Exemption provision.* The Administrator may exempt a new marine engine from compliance with §91.1103 upon such terms and conditions as the Administrator may find necessary for the purpose of export, research, investigations, studies, demonstrations, or training, or for reasons of national security.

(c) *Importation provision.* (1) A new marine SI engine, or vessel offered for importation or imported by a person in violation of §91.1103 shall be refused admission into the United States, but the Secretary of the Treasury and the Administrator may, by joint regulation, provide for deferring a final determination as to admission and authorizing the delivery of such a marine SI engine offered for import to the owner or consignee thereof upon such terms and conditions (including the furnishing of a bond) as may appear to them appropriate to insure that the marine SI engine will be brought into conformity

with the standards, requirements, and limitations applicable to it under this part.

(2) If a marine SI engine is finally refused admission under this paragraph, the Secretary of the Treasury shall cause disposition thereof in accordance with the customs laws unless it is exported, under regulations prescribed by the Secretary, within 90 days of the date of notice of the refusal or additional time as may be permitted pursuant to the regulations.

(3) Disposition in accordance with the customs laws may not be made in such manner as may result, directly or indirectly, in the sale, to the ultimate consumer, of a new marine SI engine that fails to comply with applicable standards of the Administrator under this part.

(d) *Export provision*. A new marine SI engine intended solely for export, and so labeled or tagged on the outside of the container and on the engine itself, shall be subject to the provisions of § 91.1103, except that if the country that is to receive the engine has emission standards that differ from the standards prescribed under subpart B of this part, then the engine must comply with the standards of the country that is to receive the engine.

§ 91.1105 Injunction proceedings for prohibited acts.

(a) The district courts of the United States have jurisdiction to restrain violations of § 91.1103.

(b) Actions to restrain such violations must be brought by and in the name of the United States. In an action, subpoenas for witnesses who are required to attend a district court in any district may run into any other district.

§ 91.1106 Penalties.

(a) *Violations*. A violation of the requirements of this subpart is a violation of the applicable provisions of the Act, including sections 203 and 213(d), and is subject to the penalty provisions thereunder.

(1) A person who violates § 91.1103 (a)(1), (a)(4), or (a)(5), or a manufacturer or dealer who violates § 91.1103(a)(3)(i), is subject to a civil penalty of not more than $32,500 for each violation.

(2) A person other than a manufacturer or dealer who violates § 91.1103(a)(3)(i) or any person who violates § 91.1103(a)(3)(ii) is subject to a civil penalty of not more than $2,750 for each violation.

(3) A violation with respect to § 91.1103 (a)(1), (a)(3)(i), (a)(4), or (a)(5) constitutes a separate offense with respect to each marine SI engine.

(4) A violation with respect to § 91.1103(a)(3)(ii) constitutes a separate offense with respect to each part or component. Each day of a violation with respect to § 91.1103(a)(6) constitutes a separate offense.

(5) A person who violates § 91.1103 (a)(2) or (a)(6) is subject to a civil penalty of not more than $32,500 per day of violation.

(6) The maximum penalty values listed in this section are shown for calendar year 2004. Maximum penalty limits for later years may be adjusted based on the Consumer Price Index. The specific regulatory provisions for changing the maximum penalties, published in 40 CFR part 19, reference the applicable U.S. Code citation on which the prohibited action is based.

(b) *Civil actions*. The Administrator may commence a civil action to assess and recover any civil penalty under paragraph (a) of this section.

(1) An action under this paragraph may be brought in the district court of the United States for the district in which the violation is alleged to have occurred or in which the defendant resides or has the Administrator's principal place of business, and the court shall have jurisdiction to assess a civil penalty.

(2) In determining the amount of a civil penalty to be assessed under this paragraph, the court is to take into account the gravity of the violation, the economic benefit or savings (if any) resulting from the violation, the size of the violator's business, the violator's history of compliance with Title II of the Act, action taken to remedy the violation, the effect of the penalty on the violator's ability to continue in business, and such other matters as justice may require.

(3) In any such action, subpoenas for witnesses who are required to attend a district court in any district may run into any other district.

(c) *Administrative assessment of certain penalties*—(1) Administrative penalty authority. In lieu of commencing a civil action under paragraph (b) of this section, the Administrator shall assess any civil penalty prescribed in paragraph (a) of this section, except that the maximum amount of penalty sought against each violator in a penalty assessment proceeding can not exceed $270,000, unless the Administrator and the Attorney General jointly determine that a matter involving a larger penalty amount is appropriate for administrative penalty assessment. Any such determination by the Administrator and the Attorney General is not subject to judicial review. Assessment of a civil penalty is made by an order made on the record after opportunity for a hearing held in accordance with the procedures found at part 22 of this chapter. The Administrator may compromise, or remit, with or without conditions, any administrative penalty which may be imposed under this section.

(2) *Determining amount*. In determining the amount of any civil penalty assessed under this subsection, the Administrator is to take into account the gravity of the violation, the economic benefit or savings (if any) resulting from the violation, the size of the violator's business, the violator's history of compliance with Title II of the Act, action taken to remedy the violation, the effect of the penalty on the violator's ability to continue in business, and such other matters as justice may require.

(3) *Effect of administrator's action*. (i) Action by the Administrator under this paragraph does not affect or limit the Administrator's authority to enforce any provisions of this part; except that any violation with respect to which the Administrator has commenced and is diligently prosecuting an action under this part, or for which the Administrator has issued a final order not subject to further judicial review and for which the violator has paid a penalty assessment under this part may not be the subject of a civil penalty action under paragraph (b) of this section.

(ii) No action by the Administrator under this part affects a person's obligation to comply with a section of this part.

(4) *Finality of order*. An order issued under this subsection is to become final 30 days after its issuance unless a petition for judicial review is filed under paragraph (c)(5) of this section.

(5) *Judicial review*. (i) A person against whom a civil penalty is assessed in accordance with this subsection may seek review of the assessment in the United States District Court for the District of Columbia or for the district in which the violation is alleged to have occurred, in which such person resides, or where the person's principle place of business is located, within the 30-day period beginning on the date a civil penalty order is issued. The person must simultaneously send a copy of the filing by certified mail to the Administrator and the Attorney General.

(ii) The Administrator must file in the court within 30 days a certified copy, or certified index, as appropriate, of the record on which the order was issued. The court is not to set aside or remand any order issued in accordance with the requirements of this paragraph unless substantial evidence does not exist in the record, taken as a whole, to support the finding of a violation or unless the Administrator's assessment of the penalty constitutes an abuse of discretion, and the court is not to impose additional civil penalties unless the Administrator's assessment of the penalty constitutes an abuse of discretion. In any proceedings, the United States may seek to recover civil penalties assessed under this section.

(6) *Collection*. (i) If any person fails to pay an assessment of a civil penalty imposed by the Administrator as provided in this part after the order making the assessment has become final or after a court in an action brought under paragraph (c)(5) of this section has entered a final judgment in favor of the Administrator, the Administrator is to request that the Attorney General bring a civil action in an appropriate district court to recover the amount

assessed (plus interest at rates established pursuant to section 6621(a)(2) of the Internal Revenue Code of 1986 from the date of the final order or the date of final judgment, as the case may be). In such an action, the validity, amount, and appropriateness of the penalty is not subject to review.

(ii) A person who fails to pay on a timely basis the amount of an assessment of a civil penalty as described in paragraph (c)(6)(i) of this section is required to pay, in addition to that amount and interest, the United States' enforcement expenses, including attorney's fees and costs for collection proceedings, and a quarterly nonpayment penalty for each quarter during which the failure to pay persists. The nonpayment penalty is an amount equal to 10 percent of the aggregate amount of that person's penalties and nonpayment penalties which are unpaid as of the beginning of such quarter.

[61 FR 52102, Oct. 4, 1996, as amended at 70 FR 40452, July 13, 2005]

§ 91.1107 Warranty provisions.

(a) The manufacturer of each marine SI engine must warrant to the ultimate purchaser and each subsequent purchaser that the engine is designed, built, and equipped so as to conform at the time of sale with applicable regulations under section 213 of the Act, and is free from defects in materials and workmanship which cause such engine to fail to conform with applicable regulations for its warranty period (as determined under § 91.1203).

(b) In the case of an engine part, the manufacturer or rebuilder of the part may certify according to § 85.2112 of this chapter that use of the part will not result in a failure of the engine to comply with emission standards promulgated in this part.

(c) For the purposes of this section, the owner of any engine warranted under this part is responsible for the proper maintenance of the engine. Proper maintenance includes replacement and service, at the owner's expense at a service establishment or facility of the owner's choosing, such items as spark plugs, points, condensers, and any other part, item, or device related to emission control (but not designed for emission control) under the terms of the last sentence of section 207(a)(3) of the Act, unless such part, item, or device is covered by any warranty not mandated by this Act.

§ 91.1108 In-use compliance provisions.

(a) Effective with respect to marine engine and vessels manufactured during model years 1997 and after:

(1) If the Administrator determines that a substantial number of any class or category of engines, although properly maintained and used, do not conform to the regulations prescribed under section 213 of the Act when in actual use throughout their useful life (as defined under § 91.105(a)), the Administrator shall immediately notify the manufacturer of such nonconformity and require the manufacturer to submit a plan for remedying the nonconformity of the engines with respect to which such notification is given.

(i) The manufacturer's plan shall provide that the nonconformity of any such engines which are properly used and maintained will be remedied at the expense of the manufacturer.

(ii) If the manufacturer disagrees with such determination of nonconformity and so advises the Administrator, the Administrator shall afford the manufacturer and other interested persons an opportunity to present their views and evidence in support thereof at a public hearing. Unless, as a result of such hearing, the Administrator withdraws such determination of nonconformity, the Administrator shall, within 60 days after the completion of such hearing, order the manufacturer to provide prompt notification of such nonconformity in accordance with paragraph (a)(2) of this section. The manufacturer shall comply in all respects with the requirements of subpart I of this part.

(2) Any notification required to be given by the manufacturer under paragraph (a)(1) of this section with respect to any class or category of engines shall be given to dealers, ultimate purchasers, and subsequent purchasers (if known) in such manner and containing such information as required in subparts I and J of this part.

(3)(i) The manufacturer shall furnish with each new engine written instructions for the proper maintenance and use of the engine by the ultimate purchaser as required under §91.1204. The manufacturer shall provide in boldface type on the first page of the written maintenance instructions notice that maintenance, replacement, or repair of the emission control devices and systems may be performed by any engine repair establishment or individual using any engine part which has been certified as provided in §91.1107(b).

(ii) The instruction under paragraph (a)(3)(i) of this section must not include any condition on the ultimate purchaser's using, in connection with such engine, any component or service (other than a component or service provided without charge under the terms of the purchase agreement) which is identified by brand, trade, or corporate name. Subject instructions also must not directly or indirectly distinguish between service performed by the franchised dealers of such manufacturer, or any other service establishments with which such manufacturer has a commercial relationship, and service performed by independent engine repair facilities with which such manufacturer has no commercial relationship.

(iii) The prohibition of paragraph (a)(3)(ii) of this section may be waived by the Administrator if:

(A) The manufacturer satisfies the Administrator that the engine will function properly only if the component or service so identified is used in connection with such engine, and

(B) The Administrator finds that such a waiver is in the public interest.

(iv) In addition, the manufacturer shall indicate by means of a label or tag permanently affixed to the engine that the engine is covered by a certificate of conformity issued for the purpose of assuring achievement of emission standards prescribed under section 213 of the Act. This label or tag shall also contain information relating to control of emissions as prescribed under §91.113.

(b) The manufacturer bears all cost obligation a dealer incurs as a result of a requirement imposed by paragraph (a) of this section. The transfer of any such cost obligation from a manufacturer to a dealer through franchise or other agreement is prohibited.

(c) If a manufacturer includes in an advertisement a statement respecting the cost or value of emission control devices or systems, the manufacturer shall set forth in the statement the cost or value attributed to these devices or systems by the Secretary of Labor (through the Bureau of Labor Statistics). The Secretary of Labor, and his or her representatives, has the same access for this purpose to the books, documents, papers, and records of a manufacturer as the Comptroller General has to those of a recipient of assistance for purposes of section 311 of the Act.

(d) Any inspection of an engine for purposes of paragraph (a)(1) of this section, after its sale to the ultimate purchaser, is to be made only if the owner of such vehicle or engine voluntarily permits such inspection to be made, except as may be provided by any state or local inspection program.

Subpart M—Emission Warranty and Maintenance Instructions

§91.1201 Applicability.

The requirements of this subpart M are applicable to all engines subject to the provisions of subpart A of this part 91.

§91.1202 Definitions.

The definitions of subpart A of this part apply to this subpart.

§91.1203 Emission warranty, warranty period.

(a) Warranties imposed by this subpart shall be phased in according to the following schedule.

(1) For model years 1998–2000, and for MY 1997 engine families certified pursuant to §91.205, all emission related components shall be warranted for a period of one year of engine use.

(2) For model years 2001–2003:

(i) Emission related components shall be warranted for a period of one year of engine use.

(ii) Specified major emission control components shall be warranted for a period of three years or 200 hours of engine use, whichever occurs first.

(3) For model years 2004 and beyond:

(i) Emission-related components shall be warranted for a period of two years or 200 hours of engine use, whichever occurs first.

(ii) Specified major emission control components shall be warranted for a period of three years or 200 hours of engine use, whichever occurs first.

(b) The manufacturer of each new marine SI engine must warrant to the ultimate purchaser and each subsequent purchaser, that the engine is designed, built, and equipped so as to conform at the time of sale with applicable regulations under section 213 of the Act, and the engine is free from defects in materials and workmanship which cause such engine to fail to conform with applicable regulations for its warranty period.

(c) In the case of a marine SI engine part, the manufacturer or rebuilder of the part may certify according to § 85.2112 ot this chapter that use of the part will not result in a failure of the engine to comply with emission standards promulgated in this part.

(d) For the purposes of this section, the owner of any marine SI engine warranted under this part is responsible for the proper maintenance of the engine as stated in the manufacturer's written instructions. Proper maintenance generally includes replacement and service, at the owner's expense at a service establishment or facility of the owner's choosing, such items as spark plugs, points, condensers, and any other part, item, or device related to emission control (but not designed for emission control) under the terms of the last sentence of section 207(a)(3) of the Act, unless such part, item, or device is covered by any warranty not mandated by this Act.

§ 91.1204 Furnishing of maintenance and use instructions to ultimate purchaser.

(a) The manufacturer must furnish or cause to be furnished to the ultimate purchaser of each new marine SI engine written instructions for the maintenance and use needed to assure proper functioning of the emission control system.

(b) The manufacturer must provide in boldface type on the first page of the written maintenance instructions notice that maintenance, replacement, or repair of the emission control devices and systems may be performed by any marine SI engine repair establishment or individual.

(c) The instructions under paragraph (a) of this section will not include any condition on the ultimate purchaser's using, in connection with such engine, any component or service (other than a component or service provided without charge under the terms of the purchase agreement) which is identified by brand, trade, or corporate name. Such instructions also will not directly or indirectly distinguish between service performed by the franchised dealers of such manufacturer or any other service establishments with which such manufacturer has a commercial relationship and service performed by independent marine engine repair facilities which such manufacturer has no commercial relationship.

(d) The prohibition of paragraph (c) of this section may be waived by the Administrator if:

(1) The manufacturer satisfies the Administrator that the engine will function properly only if the component or service so identified is used in connection with such engine, and

(2) The Administrator finds that such a waiver is in the public interest.

Subpart N—In-Use Credit Program for New Marine Engines

§ 91.1301 Applicability.

Marine SI engines subject to the provisions of subpart A of this part 91 are eligible to participate in the in-use credit program described in this subpart.

§ 91.1302 Definitions.

The definitions in subpart A of this part apply to this subpart. The following definitions shall also apply to this subpart:

Averaging means the exchange of marine engine in-use emission credits among engine families within a given manufacturer's product line.

Banking means the retention of marine engine in-use emission credits by the manufacturer generating the emission credits for use in future model

year averaging or trading as permitted by these regulations.

Carry-over engine family means an engine family which undergoes certification using carryover test data from previous model years. See §91.118(c).

Emission credits or in-use credits represent the amount of emission reduction or exceedance, for each regulated pollutant, by a marine engine family below or above, respectively, the applicable certification family emission limit (FEL) to which the engine family is certified. Emission reductions below the FEL are considered ''positive credits,'' while emission exceedances above the FEL are considered ''negative or required credits.''

Banked credits refer to positive emission credits based on actual applicable production/sales volume as contained in the end of model year in-use testing reports submitted to EPA. Some or all of these banked credits may be revoked if EPA review of the end of model year in-use testing reports or any subsequent audit action(s) uncovers problems or errors.

Trading means the exchange of marine SI engine in-use emission credits between manufacturers and/or brokers.

Compliance level for an engine family is determined by averaging the in-use test results from each engine.

§91.1303 General provisions.

(a) The in-use credit program for eligible marine engines is described in this subpart. Participation in this program is voluntary.

(b) A marine SI engine family is eligible to participate in the in-use credit program if it is subject to regulation under subpart B of this part with certain exceptions specified in paragraph (c) of this section.

(c) Marine SI engines may not participate in the in-use averaging, banking, and trading program if they are delivered to a ''point of first retail sale'' outside of the U.S., as defined in §91.202.

(d) Credits generated and used in the marine engine certification averaging, banking, and trading program pursuant to the provisions of subpart C of this part are not interchangeable with credits generated and used in the marine engine in-use credit program.

(e) An engine family with a compliance level, as determined by in-use testing pursuant to subpart I of this part and paragraph (h) of this section, below the applicable FEL to which the engine family is certified may generate emission credits for averaging, banking, or trading in the in-use credit program.

(f) Positive credits generated in a given model year may be used in that model year and/or in any subsequent model year.

(g) A manufacturer of an engine family with a compliance level exceeding the applicable FEL to which the engine family is certified, may, prior to the date of the report required under paragraph (j) of this section use previously banked credits, purchase credits from another manufacturer, or perform additional testing pursuant to paragraph (i) of this section to address (as calculated elsewhere in this subpart) the associated credit deficit (negative credits or a need for credits).

(h) A manufacturer may carry-over an in-use credit deficit up to and including model year 2003. Beginning with model year 2004, all manufacturers must have a zero or positive credit balance.

(i) A manufacturer must notify EPA of plans to test additional engine families beyond the maximum 25 percent required in subpart I of this part for the in-use testing program. Such notice must be submitted 30 days prior to initiation of service accumulation. EPA may approve, with adequate justification, the use of an existing fleet for additional testing. If the additional testing discovers an engine family to be in noncompliance with the applicable FEL, the testing must be treated as if it were a failure of the normal in-use testing requirement of an engine family.

(j) Manufacturers must demonstrate a zero or positive credit balance under the in-use credit program for a particular model year within 90 days of the end of the in-use testing of that model year's engine families, or at the same time as the final certification AB&T report (required under §91.210), whichever is later.

§ 91.1304 Averaging.

(a) A manufacturer may use averaging across engine families to demonstrate a zero or positive credit balance for a model year. Positive credits to be used in averaging may be obtained from credits generated by another engine family of the same model year, credits banked in previous model years, or credits obtained through trading.

(b) Beginning in model year 2004, credits used to demonstrate a zero or positive credit balance must be used at a rate of 1.1 to 1.

§ 91.1305 Banking.

(a) A manufacturer of a marine SI engine family with an in-use compliance level below the applicable FEL to which the engine family is certified for a given model year may bank positive in-use credits for that model year for use in in-use averaging and trading.

(b) A manufacturer may consider credits banked 30 days after the submission of the report required by § 91.1309(a). During the 30 day period EPA will work with the manufacturer to correct any error in calculating banked credits, if necessary.

§ 91.1306 Trading.

(a) A marine engine manufacturer may exchange positive in-use emission credits with other marine engine manufacturers through trading.

(b) In-use credits for trading can be obtained from credits banked for model years prior to the model year of the engine family requiring in-use credits.

(c) Traded in-use credits can be used for averaging, banking, or further trading transactions.

(d) Unless otherwise approved by EPA, a manufacturer that generates positive in-use credits must wait 30 days after it has both completed in-use testing for the model year for which the credits were generated and submitted the report required by § 91.1309(a) before it may transfer credits to another manufacturer or broker.

(e) In the event of a negative credit balance resulting from a transaction, both the buyer and the seller are liable, except in cases involving fraud. Engine families participating in a negative trade may be subject to recall under subpart I of this part.

§ 91.1307 Credit calculation.

For each participating engine family, emission credits (positive or negative) are to be calculated according to the following equation and rounded, in accordance with ASTM E29–93a, to the nearest gram. ASTM E29–93a has been incorporated by reference. See § 91.6. Consistent units are to be used throughout the equation. The following equation is used to determine the credit status for an engine family whether generating positive or negative in-use emission credits:

$$\sum_{t=1}^{\text{max useful life}} \frac{S(t) \times \text{sales} \times (\text{FEL} - \text{CL}) \times \text{Power} \times \text{AF} \times 0.207 \times \mu_{\text{use}}}{1.03^{t}}$$

Where:

S(t)=cumulative fraction survived at time t;

μ_{life}=average useful life in years, specific to the power rating and the application as given below.

Engine type	(μ_{life})
Outboard	$41.27 \times \left(\frac{\text{Power}}{0.746}\right)^{-0.204}$
Personal Watercraft	10

Power = the average power of an engine family in kW (sales weighted). The power of each configuration is the rated output in

kilowatts as determined by SAE J1228. This procedure has been incorporated by reference. See §91.6.

t = time in model years

max useful life = maximum useful life specific to the power rating and the application; max useful life = $2\mu_{life}$

sales = the number of eligible sales tracked to the point of first retail sale in the U.S. for the given engine family during the model year.

FEL = the family emission limit for the engine family in grams per kilowatt hour.

CL = compliance level of the in-use testing in g/kW-hr.

μ_{use} = mean use in hours per year. For outboard engines, μ_{use}=34.8 hrs /yr. For personal watercraft, μ_{use}=77.3 hrs/yr;

AF = adjustment factor for the number of tests conducted

No. eng. tested	2*, 4	6	8	10
Adjustment factor	.5	.75	.9	1

*Small volume manufacturer

§91.1308 Maintenance of records.

(a) Any manufacturer that is participating in the in-use credit program set forth in this subpart shall establish, maintain, and retain the records required by §91.209 with respect to its participation in the in-use credit program.

(b) EPA may void *ab initio* a certificate of conformity for an engine family for which the manufacturer fails to retain the records required under this section or to provide such information to the Administrator upon request.

§91.1309 Reporting requirements.

(a) Any manufacturer who participates in the in-use credit program is required to submit an end of the model year in-use testing report either within 90 days of the end of the model year in-use testing of a given model year's engine families, or at the same time as the final certification AB&T report (required under §91.210), whichever is later. The end of the model year in-use testing report must contain the required information and show the calculated credits from all the in-use testing conducted by the manufacturer for a given model year.

(b) Reports shall be submitted to: Manager, Engine Compliance Programs Group 6403–J, U.S. Environmental Protection Agency, 1200 Pennsylvania Ave., NW., Washington, DC 20460.

(c) A manufacturer that fails to submit a timely report as required in paragraph (a) of this section will be considered to not have participated in the in-use credit program.

(d) If EPA or the manufacturer determines that a reporting error occurred on an end of model year report previously submitted to EPA under this subpart, or an engine family in-use testing report submitted to EPA under subpart I, the manufacturer's credits and credit calculations will be recalculated. Erroneous positive credits will be void. Erroneous negative credits may be adjusted by EPA. An update of previously submitted ''point of first retail sale'' information is not considered an error and no increase in the number of credits will be allowed unless an actual error occurred in the calculation of credits due to an error in the ''point of first retail sale'' information from the time of the original end of model year report.

§91.1310 Notice of opportunity for hearing.

Any voiding of an engine family's certificate of conformity under §91.1308(b) of this subpart will occur only after the manufacturer concerned has been offered an opportunity for a hearing conducted in accordance with §§91.512, 91.513, 91.514 and 91.515.

PART 92—CONTROL OF AIR POLLUTION FROM LOCOMOTIVES AND LOCOMOTIVE ENGINES

Subpart A—General Provisions for Emission Regulations for Locomotives and Locomotive Engines

Sec.

92.1 Applicability.
92.2 Definitions.
92.3 Abbreviations.
92.4 Treatment of confidential information.
92.5 Reference materials.
92.6 Regulatory structure.
92.7 General standards.
92.8 Emission standards.
92.9 Compliance with emission standards.
92.10 Warranty period.
92.11 Compliance with emission standards in extraordinary circumstances.
92.12 Interim provisions.

Subpart B—Test Procedures

92.101 Applicability.
92.102 Definitions and abbreviations.
92.103 Test procedures; overview.
92.104 Locomotive and engine testing; overview.
92.105 General equipment specifications.
92.106 Equipment for loading the engine.
92.107 Fuel flow measurement.
92.108 Intake and cooling air measurements.
92.109 Analyzer specifications.
92.110 Weighing chamber and micro-balance.
92.111 Smoke measurement system.
92.112 Analytical gases.
92.113 Fuel specifications.
92.114 Exhaust gas and particulate sampling and analytical system.
92.115 Calibrations; frequency and overview.
92.116 Engine output measurement system calibrations.
92.117 Gas meter or flow instrumentation calibration, particulate measurement.
92.118 Analyzer checks and calibrations.
92.119 Hydrocarbon analyzer calibration.
92.120 NDIR analyzer calibration and checks.
92.121 Oxides of nitrogen analyzer calibration and check.
92.122 Smoke meter calibration.
92.123 Test procedure; general requirements.
92.124 Test sequence; general requirements.
92.125 Pre-test procedures and preconditioning.
92.126 Test run.
92.127 Emission measurement accuracy.
92.128 Particulate handling and weighing.
92.129 Exhaust sample analysis.
92.130 Determination of steady-state concentrations.
92.131 Smoke, data analysis.
92.132 Calculations.
92.133 Required information.

Subpart C—Certification Provisions

92.201 Applicability.
92.202 Definitions.
92.203 Application for certification.
92.204 Designation of engine families.
92.205 Prohibited controls, adjustable parameters.
92.206 Required information.
92.207 Special test procedures.
92.208 Certification.
92.209 Certification with multiple manufacturers or remanufacturers.
92.210 Amending the application and certificate of conformity.
92.211 Emission-related maintenance instructions for purchasers.
92.212 Labeling.
92.213 Submission of locomotive and engine identification numbers.
92.214 Production locomotives and engines.
92.215 Maintenance of records; submittal of information; right of entry.
92.216 Hearing procedures.

Subpart D—Certification Averaging, Banking, and Trading Provisions

92.301 Applicability.
92.302 Definitions.
92.303 General provisions.
92.304 Compliance requirements.
92.305 Credit generation and use calculation.
92.306 Certification.
92.307 Labeling.
92.308 Maintenance of records.
92.309 Reports.
92.310 Notice of opportunity for hearing.

Subpart E—Emission-Related Defect Reporting Requirements, Voluntary Emission Recall Program

92.401 Applicability.
92.402 Definitions.
92.403 Emission defect information report.
92.404 Voluntary emissions recall reporting.
92.405 Alternative report formats.
92.406 Reports filing: record retention.
92.407 Responsibility under other legal provisions preserved.
92.408 Disclaimer of production warranty applicability.

Subpart F—Manufacturer and Remanufacturer Production Line Testing and Audit Programs

92.501 Applicability.
92.502 Definitions.
92.503 General requirements.
92.504 Right of entry and access.
92.505 Sample selection for testing.
92.506 Test procedures.
92.507 Sequence of testing.
92.508 Calculation and reporting of test results.
92.509 Maintenance of records; submittal of information.
92.510 Compliance with criteria for production line testing.
92.511 Remanufactured locomotives: installation audit requirements.
92.512 Suspension and revocation of certificates of conformity.
92.513 Request for public hearing.
92.514 Administrative procedures for public hearing.
92.515 Hearing procedures.
92.516 Appeal of hearing decision.
92.517 Treatment of confidential information.

Subpart G—In-Use Testing Program

92.601 Applicability.
92.602 Definitions.
92.603 General provisions.
92.604 In-use test procedure.

92.605 General testing requirements.
92.606 Maintenance, procurement and testing of in-use locomotives.
92.607 In-use test program reporting requirements.

Subpart H—Recall Regulations

92.701 Applicability.
92.702 Definitions.
92.703 Voluntary emissions recall.
92.704 Notice to manufacturer or remanufacturer of nonconformity; submission of remedial plan.
92.705 Remedial plan.
92.706 Approval of plan: Implementation.
92.707 Notification to locomotive or locomotive engine owners.
92.708 Records and reports.
92.709 Public hearings.

Subpart I—Importation of Nonconforming Locomotives and Locomotive Engines

92.801 Applicability.
92.802 Definitions.
92.803 Admission.
92.804 Exemptions.
92.805 Prohibited acts; penalties.

Subpart J—Exclusion and Exemption Provisions

92.901 Purpose and applicability.
92.902 Definitions.
92.903 Exclusions.
92.904 Exemptions.
92.905 Testing exemption.
92.906 Manufacturer-owned, remanufacturer-owned exemption and display exemption.
92.907 Non-locomotive-specific engine exemption.
92.908 National security exemption.
92.909 Export exemptions.
92.910 Granting of exemptions.
92.911 Submission of exemption requests.
92.912 Staged-assembly exemption.

Subpart K—Requirements Applicable to Owners and Operators of Locomotives and Locomotive Engines

92.1001 Applicability.
92.1002 Definitions.
92.1003 In-use testing program.
92.1004 Maintenance and repair.
92.1005 In-use locomotives.
92.1006 Refueling requirements.
92.1007 Remanufacturing requirements.

Subpart L—General Enforcement Provisions and Prohibited Acts

92.1101 Applicability.
92.1102 Definitions.
92.1103 Prohibited acts.
92.1104 General enforcement provisions.
92.1105 Injunction proceedings for prohibited acts.
92.1106 Penalties.
92.1107 Warranty provisions.
92.1108 In-use compliance provisions.

APPENDIX I TO PART 92—EMISSION-RELATED LOCOMOTIVE AND ENGINE PARAMETERS AND SPECIFICATIONS
APPENDIX II TO PART 92—INTERPRETIVE RULING FOR §92.705—REMEDIAL PLANS
APPENDIX III TO PART 92—SMOKE STANDARDS FOR NON-NORMALIZED MEASUREMENTS
APPENDIX IV TO PART 92—GUIDELINES FOR DETERMINING EQUIVALENCY BETWEEN EMISSION MEASUREMENT SYSTEMS

AUTHORITY: 42 U.S.C. 7401–7671q.

SOURCE: 63 FR 18998, Apr. 16, 1998, unless otherwise noted.

Subpart A—General Provisions for Emission Regulations for Locomotives and Locomotive Engines

§92.1 Applicability.

(a) Except as noted in paragraphs (b), (d) and (e) of this section, the provisions of this part apply to manufacturers, remanufacturers, owners and operators of:

(1) Locomotives and locomotive engines manufactured on or after January 1, 2000; and

(2) Locomotives and locomotive engines manufactured on or after January 1, 1973 and remanufactured on or after January 1, 2000; and

(3) Locomotives and locomotive engines manufactured prior to January 1, 1973, and upgraded on or after January 1, 2000.

(b) The requirements and prohibitions of this part do not apply with respect to:

(1) Steam locomotives, as defined in §92.2;

(2) Locomotives powered solely by an external source of electricity;

(3) Locomotive engines which provide only hotel power (see 40 CFR parts 89 and 1039 to determine if such engines are subject to EPA emission requirements); or

(4) Nonroad vehicles excluded from the definition of locomotive in §92.2, and the engines used in such nonroad vehicles (see 40 CFR parts 86, 89, and

1039 to determine if such vehicles or engines are subject to EPA emission requirements).

(c) For cases in which there are multiple entities meeting the definition of manufacturer or remanufacturer, see § 92.209 for guidance.

(d) The provisions of subpart L of this part apply to all persons.

(e) The provisions of this part do not apply for locomotives that are subject to the emissions standards of 40 CFR part 1033.

[63 FR 18998, Apr. 16, 1998, as amended at 70 FR 40452, July 13, 2005; 73 FR 37194, June 30, 2008]

§ 92.2 Definitions.

(a) The definitions of this section apply to this subpart. They also apply to all subparts of this part, except where noted otherwise.

(b) As used in this part, all terms not defined in this section shall have the meaning given them in the Act:

Act means the Clean Air Act as amended (42 U.S.C. 7401 *et seq.*).

Administrator means the Administrator of the Environmental Protection Agency or his/her authorized representative.

Aftertreatment system or *aftertreatment component* or *aftertreatment technology* means any system or component or technology mounted downstream of the exhaust valve or exhaust port whose design function is to reduce exhaust emissions.

Alcohol fuel means a fuel consisting primarily (more than 50 percent by weight) of one or more alcohols: e.g., methyl alcohol, ethyl alcohol.

Alternator/generator efficiency means the ratio of the electrical power output from the alternator/generator to the mechanical power input to the alternator/generator at the operating point.

Alternator/generator input horsepower means the mechanical horsepower input to the main alternator or generator of a locomotive. For the purpose of calculating brake horsepower, alternator/generator input horsepower does not include any power used to circulate engine coolant, circulate engine lubricant, or to supply fuel to the engine.

Applicable standard means a standard to which a locomotive or locomotive engine is subject; or, where a locomotive or locomotive engine is certified another standard or FEL, applicable standard means the other standard or FEL to which the locomotive or locomotive engine is certified, as allowed by § 92.8. This definition does not apply to subpart D of this part.

Auxiliary emission control device (AECD) means any element of design which senses temperature, locomotive speed, engine RPM, atmospheric pressure, manifold pressure or vacuum, or any other parameter for the purpose of activating, modulating, delaying, or deactivating the operation of any part of the emission control system (including, but not limited to injection timing); or any other feature that causes in-use emissions to be higher than those measured under test conditions, except as allowed by this part.

Auxiliary engine means a locomotive engine that provides hotel power, but does not provide power to propel the locomotive.

Auxiliary power means the power provided by the main propulsion engine to operate accessories such as cooling fans.

Averaging for locomotives and locomotive engines means the exchange of emission credits among engine families within a given manufacturer's, or remanufacturer's, product line.

Banking means the retention of emission credits by a credit holder for use in future calendar year averaging or trading as permitted by the regulations in this part.

Brake horsepower means the sum of the alternator/generator input horsepower and the mechanical accessory horsepower, excluding any power used to circulate engine coolant, circulate engine lubricant, or to supply fuel to the engine.

Calibration means the set of specifications, including tolerances, specific to a particular design, version, or application of a component, or components, or assembly capable of functionally describing its operation over its working range. This definition does apply to Subpart B of this part.

Class I freight railroad means a Class I railroad that primarily transports freight rather than passengers.

Class I railroad means a railroad that has been classified as a Class I railroad by the Surface Transportation Board.

Class II railroad means a railroad that has been classified as a Class II railroad by the Surface Transportation Board.

Class III railroad means a railroad that has been classified as a Class III railroad by the Surface Transportation Board.

Configuration means any subclassification of an engine family which can be described on the basis of gross power, emission control system, governed speed, injector size, engine calibration, and other parameters as designated by the Administrator.

Crankcase emissions means emissions to the atmosphere from any portion of the crankcase ventilation or engine lubrication systems.

Defeat device means an AECD or other control feature that reduces the effectiveness of the emission control system under conditions which may reasonably be expected to be encountered in normal locomotive operation and use, unless the AECD or other control feature has been identified by the certifying manufacturer or remanufacturer in the application for certification, and:

(1) Such conditions are substantially represented by the portion of the federal test procedure during which the applicable emission rates are measured;

(2) The need for the AECD is justified in terms of protecting the locomotive or locomotive engine against damage or accident; or

(3) The AECD does not go beyond the requirements of engine starting.

Deterioration factor means the difference between exhaust emissions at the end of useful life and exhaust emissions at the low mileage test point expressed as either: the ratio of exhaust emissions at the end of useful life to exhaust emissions at the low mileage test point (for multiplicative deterioration factors); or the difference between exhaust emissions at the end of useful life exhaust emissions at the low mileage test point (for additive deterioration factors).

Diesel fuel means any fuel suitable for use in diesel engines, and which is commonly or commercially known or sold as diesel fuel.

Emission control system means those devices, systems or elements of design which control or reduce the emission of substances from an engine. This includes, but is not limited to, mechanical and electronic components and controls, and computer software.

Emission credits represent the amount of emission reduction or exceedance, by a locomotive engine family, below or above the emission standard, respectively. Emission reductions below the standard are considered as ''positive credits,'' while emission exceedances above the standard are considered as ''negative credits.'' In addition, ''projected credits'' refer to emission credits based on the projected applicable production/sales volume of the engine family. ''Reserved credits'' are emission credits generated within a calendar year waiting to be reported to EPA at the end of the calendar year. ''Actual credits'' refer to emission credits based on actual applicable production/sales volume as contained in the end-of-year reports submitted to EPA.

Emission-data engine means an engine which is tested for purposes of emission certification or production line testing.

Emission-data locomotive means a locomotive which is tested for purposes of emission certification or production line testing.

Emission-related defect means a defect in design, materials, or workmanship in a device, system, or assembly described in the approved Application for certification which affects any parameter or specification enumerated in Appendix I of this part.

Emission-related maintenance means that maintenance which substantially affects emissions or which is likely to affect the deterioration of the locomotive or engine with respect to emissions, as described in an approved Application for certification.

Engine family means a group of locomotive or locomotive engine configurations which are expected to have similar emission characteristics throughout the useful lives of the locomotives and engines (see §92.204), and which are (or were) covered (or requested to be

covered) by a specific certificate of conformity.

Engine used in a locomotive means an engine incorporated into a locomotive or intended for incorporation into a locomotive.

Engineering analysis means a summary of scientific and/or engineering principles and facts that support a conclusion made by a manufacturer or remanufacturer, with respect to compliance with the provisions of this part.

EPA Enforcement Officer means any officer or employee of the Environmental Protection Agency so designated in writing by the Administrator or his/her designee.

Ethanol means a fuel that contains at least 50 percent ethanol (ethyl alcohol, (C_2H_5OH)) by volume.

Exhaust emissions means substances (i.e., gases and particles) emitted to the atmosphere from any opening downstream from the exhaust port or exhaust valve of a locomotive engine.

Family Emission Limit means an emission level declared by the certifying manufacturer or remanufacturer to serve in lieu of an otherwise applicable emission standard for certification and compliance purposes in the averaging, banking and trading program. FELs are expressed to the same number of decimal places as the applicable emission standard.

Freshly manufactured locomotive means a locomotive which is powered by a freshly manufactured engine, and which contains fewer than 25 percent previously used parts (weighted by the dollar value of the parts). See 40 CFR 1033.640 for information about how to calculate this.

Freshly manufactured locomotive engine means a new locomotive engine which has not been remanufactured.

Fuel system means the combination of fuel tank(s), fuel pump(s), fuel lines and filters, pressure regulator(s), and fuel injection components (or pressure regulator(s) and carburetor(s) if fuel injection is not employed), fuel system vents, and any other component involved in the delivery of fuel to the engine.

Gaseous fuel means a fuel which is a gas at standard temperature and pressure. This includes both natural gas and liquefied petroleum gas.

Green engine factor means a factor that is applied to emission measurements from a locomotive or locomotive engine that has had little or no service accumulation. The green engine factor adjusts emission measurements to be equivalent to emission measurements from a locomotive or locomotive engine that has had approximately 300 hours of use.

High-altitude means relating to an altitude greater than 4000 feet (1220 meters) and less than 7000 feet (2135 meters), or equivalent observed barometric test conditions of 25.7 to 22.7 inch Hg (88.5 to 78.1 kilopascals).

Hotel power means the power provided by an engine on a locomotive to operate equipment on passenger cars of a train; e.g., heating and air conditioning, lights, etc.

Idle speed means that speed, expressed as the number of revolutions of the crankshaft per unit of time (e.g., rpm), at which the engine is set to operate when not under load for purposes of propelling the locomotive.

Importer means an entity or person who imports locomotives or locomotive engines from a foreign country into the United States (including the Commonwealth of Puerto Rico, the Virgin Islands, Guam, American Samoa, and the Northern Mariana Islands).

Inspect and qualify means to determine that a previously used component or system meets all applicable criteria listed for the component or system in a certificate of conformity for remanufacturing (e.g., determine that the component or system is functionally equivalent to one that has not been used previously).

Installer means an individual or entity which assembles remanufactured locomotives or locomotive engines.

Liquefied petroleum gas means the commercial product marketed as liquefied petroleum gas or propane.

Locomotive means a self-propelled piece of on-track equipment designed for moving or propelling cars that are designed to carry freight, passengers or other equipment, but which itself is not designed or intended to carry freight, passengers (other than those operating the locomotive) or other

equipment. The following other equipment are not locomotives (see 40 CFR parts 86 and 89 for this equipment):

(1) Equipment which is designed for operation both on highways and rails are not locomotives.

(2) Specialized railroad equipment for maintenance, construction, post accident recovery of equipment, and repairs; and other similar equipment, are not locomotives.

(3) Vehicles propelled by engines with total rated horsepower of less than 750 kW (1006 hp) are not locomotives (see 40 CFR parts 86 and 89 for this equipment), unless the owner (including manufacturers) chooses to have the equipment certified under the requirements of this part. Where equipment is certified as a locomotive pursuant to this paragraph (3), it shall be subject to the requirements of this part for the remainder of its service life. For locomotives propelled by two or more engines, the total rated horsepower is the sum of the rated horsepowers of each engine.

Locomotive engine means an engine incorporated into a locomotive or intended for incorporation into a locomotive.

Low hour engine means an engine during the interval between the time that normal assembly operations and adjustments are completed and the time that 300 additional operating hours have been accumulated (including hours accumulated during emission testing if performed).

Low idle speed means a speed which is less than normal idle speed, expressed as the number of revolutions of the crankshaft per unit of time, at which an engine can be set when not under load for purposes of propelling the locomotive.

Low mileage locomotive means a locomotive during the interval between the time that normal assembly operations and adjustments are completed and the time that either 10,000 miles of locomotive operation or 300 additional operating hours have been accumulated (including emission testing if performed).

Malfunction means a condition in which the operation of a component in a locomotive or locomotive engine occurs in a manner other than that specified by the certifying manufacturer or remanufacturer (e.g., as specified in the application for certification); or the operation of the locomotive or locomotive engine in that condition.

Manufacturer means an individual or entity engaged in the manufacturing or assembling of freshly manufactured locomotives or freshly manufactured locomotive engines; or the importing of locomotives or locomotive engines originally manufactured on or after January 1, 1973 and not remanufactured. (See §§92.1(c) and 92.209 for applicability of this term.)

Maximum rated horsepower means the maximum brake horsepower output of an engine.

Mechanical accessory horsepower means the sum of mechanical horsepower generated by an engine to supply accessories. Mechanical accessory horsepower does not include power supplied to the main alternator or generator, power used to circulate engine coolant or engine lubricant, or power used to supply fuel to the engine.

Methanol means a fuel that contains at least 50 percent methanol (methyl alcohol, (CH_3OH)) by volume.

Method of aspiration means the method whereby air for fuel combustion enters the engine (e.g., natural or turbocharged).

Model year means a calendar year; except where the Administrator determines a different production period which includes January 1 of such calendar year.

Natural gas means the commercial product marketed as natural gas whose primary constituent is methane.

New locomotive or *new locomotive engine* means:

(1)(i) A locomotive or locomotive engine the equitable or legal title to which has never been transferred to an ultimate purchaser; or

(ii) A locomotive or locomotive engine which has been remanufactured, but has not been placed back into service.

(2) Where the equitable or legal title to a locomotive or locomotive engine is not transferred prior to its being placed into service, the locomotive or locomotive engine ceases to be new when it is placed into service.

(3) With respect to imported locomotives or locomotive engines, the term ''new locomotive'' or ''new locomotive engine'' means a locomotive or locomotive engine that is not covered by a certificate of conformity under this part at the time of importation, and that was manufactured or remanufactured after the effective date of the emission standards in this part which is applicable to such locomotive or engine (or which would be applicable to such locomotive or engine had it been manufactured or remanufactured for importation into the United States).

(4) Notwithstanding paragraphs (1) through (3) of this definition, locomotives and locomotive engines which were originally manufactured before January 1, 1973 and which have not been upgraded are not new.

(5) Notwithstanding paragraphs (1) through (3) of this definition, locomotives and locomotive engines which are owned by a small railroad and which have never been manufactured or remanufactured into a certified configuration are not new.

Nonconforming locomotive or *nonconforming locomotive engine* means a locomotive or locomotive engine which is not covered by a certificate of conformity prior to importation or being offered for importation (or for which such coverage has not been adequately demonstrated to EPA); or a locomotive or locomotive engine which was originally covered by a certificate of conformity, but which is not in a certified configuration, or otherwise does not comply with the conditions of that certificate of conformity.

(NOTE: Domestic locomotives and locomotive engines which are not covered by a certificate of conformity prior to their introduction into U.S. commerce are considered to be noncomplying locomotives and locomotive engines.)

Non-locomotive-specific engine means an engine that is sold for and used in non-locomotive applications more than for locomotive applications.

Normal idle means relating to the idle throttle-notch position for locomotives that have one throttle-notch position, or the highest the idle throttle-notch position for locomotives that have two throttle-notch positions.

Opacity means the fraction of a beam of light, expressed in percent, which fails to penetrate a plume of smoke as measured and calculated under the provisions of subpart B of this part.

Original manufacture means the event of freshly manufacturing a locomotive or locomotive engine. The date of original manufacture is the date of final assembly; except as provided in § 92.11. Where a locomotive or locomotive engine is manufactured under § 92.11, the date of original manufacture is the date on which the final assembly of locomotive or locomotive engine was originally scheduled.

Original remanufacture means the first remanufacturing of a locomotive or locomotive engine at which the locomotive or locomotive engines is subject to the emission standards of this part.

Oxides of nitrogen means nitric oxide and nitrogen dioxide. Oxides of nitrogen are expressed quantitatively as if the nitric oxide were in the form of nitrogen dioxide (oxides of nitrogen are assumed to have a molecular weight equivalent to nitrogen dioxide).

Passenger locomotive means a locomotive designed and constructed for the primary purpose of propelling passenger trains, and providing power to the passenger cars of the train for such functions as heating, lighting and air conditioning.

Petroleum fuel means a fuel primarily derived from crude oil (e.g., gasoline or diesel fuel).

Power assembly means the components of an engine in which combustion of fuel occurs, and consists of the cylinder, piston and piston rings, valves and ports for admission of charge air and discharge of exhaust gases, fuel injection components and controls, cylinder head and associated components.

Primary fuel means that type of fuel (e.g., diesel fuel) that is consumed in the greatest quantity (mass basis) when the locomotive or locomotive engine is operated in use.

Produce means to manufacture or remanufacture. Where a certificate holder does not actually assemble the locomotives or locomotive engines that it manufactures or remanufactures, produce means to allow other entities to assemble locomotives or locomotive engines under the certificate holder's certificate.

Railroad means a commercial entity that operates locomotives to transport passengers or freight.

Rated horsepower means the maximum horsepower output of a locomotive engine in use.

Remanufacture means:

(1)(i) To replace, or inspect and qualify, each and every power assembly of a locomotive or locomotive engine, whether during a single maintenance event or cumulatively within a five year period; or

(ii) To upgrade a locomotive or locomotive engine; or

(iii) To convert a locomotive or locomotive engine to enable it to operate using a fuel other than it was originally manufactured to use; or

(iv) To install a remanufactured engine or a freshly manufactured engine into a previously used locomotive.

(2) *Remanufacture* also means the act of remanufacturing.

Remanufacture system or *remanufacturing system* means all components (or specifications for components) and instructions necessary to remanufacture a locomotive or locomotive engine in accordance with applicable requirements of this part.

Remanufactured locomotive means either a locomotive which is powered by a remanufactured locomotive engine, or a repowered locomotive.

Remanufactured locomotive engine means a locomotive engine which has been remanufactured.

Remanufacturer means an individual or entity that is engaged in the manufacture or assembly of remanufactured locomotives or locomotive engines, (including: Entities that design or produce the emission-related parts used in remanufacturing; entities that install parts in an existing locomotive or locomotive engine to remanufacture it; and entities that own or operate the locomotive or locomotive engine and provide specifications as to how an engine is to be remanufactured (i.e., specifying who will perform the work, when the work is to be performed, what parts are to be used, or how to calibrate the adjustable parameters of the engine)); or an importer of remanufactured locomotives or locomotive engines. (See §§92.1(c) and 92.209 for applicability of this term.)

Repower means replacement of the engine in a previously used locomotive with a freshly manufactured locomotive engine. Replacing a locomotive engine with a freshly manufactured locomotive engine in a locomotive that has a refurbished or reconditioned chassis such that less than 25 percent of the parts of the locomotive were previously used (as weighted by dollar value) is not repowering.

Repowered locomotive means a locomotive that has been repowered with a freshly manufactured engine.

Service life means the total life of a locomotive or locomotive engine. Service life begins when the locomotive or locomotive engine is originally manufactured and continues until the locomotive or locomotive engine is permanently removed from service.

Small railroad means a railroad that is classified by the Small Business Administration as a small business.

Small remanufacturer means a remanufacturer that is classified by the Small Business Administration as a small business.

Smoke means the matter in the engine exhaust which obscures the transmission of light.

Specified adjustable range means the range of allowable settings for an adjustable component specified by a certificate of conformity.

Specified by a certificate of conformity or *specified in a certificate of conformity* means stated or otherwise specified in a certificate of conformity or an approved application for certification.

Steam locomotive means a historic locomotive propelled by a steam engine.

Switch locomotive means a locomotive designed or used solely for the primary purpose of propelling railroad cars a short distance, and that is powered by an engine with a maximum horsepower rating of 2300 hp or less.

Test locomotive or *locomotive engine* means a locomotive or locomotive engine in a test sample.

Test sample means the collection of locomotives or locomotive engines selected from the population of an engine family for emission testing or auditing.

Throttle means the component, or components, which either directly or indirectly controls the fuel flow to the engine.

Throttle notch means a discrete throttle position for a locomotive with a limited number of throttle positions.

Throttle notch horsepower means the brake horsepower output of an engine corresponding to each throttle notch position, including dynamic-brake settings.

Throttle notch speed means the speed of the engine, expressed as the number of revolutions of the crankshaft per unit of time (e.g., rpm), corresponding to each throttle notch position, including dynamic-brake, and hotel power settings.

Tier 0 means relating to emission standards applicable to locomotives originally manufactured before January 1, 2002; or relating to such locomotives.

1 means relating to emission standards applicable to locomotives originally manufactured on or after January 1, 2002 and before January 1, 2005; or relating to such locomotives.

Tier 2 means relating to emission standards applicable to locomotives originally manufactured on or after January 1, 2005; or relating to such locomotives.

Total Hydrocarbon Equivalent means the sum of the carbon mass contributions of non-oxygenated hydrocarbons, alcohols and aldehydes, or other organic compounds that are measured separately as contained in a gas sample, expressed as gasoline-fueled vehicle hydrocarbons. The hydrogen-to-carbon ratio of the equivalent hydrocarbon is 1.85:1. Total Hydrocarbon Equivalent is abbreviated THCE.

Trading means the exchange of locomotive or locomotive engine emission credits between credit holders.

United States means the States, the District of Columbia, the Commonwealth of Puerto Rico, the Commonwealth of the Northern Mariana Islands, Guam, American Samoa, and the U.S. Virgin Islands.

Upgrade means to modify a locomotive or locomotive engine that was originally manufactured prior to January 1, 1973 (or a locomotive or locomotive engine that was originally manufactured on or after January 1, 1973, and that is not subject to the emission standards of this part), such that it is intended to comply with the Tier 0 standards. Upgrading is a type of remanufacturing.

Useful life means the period during which the locomotive engine is designed to properly function in terms of reliability and fuel consumption, without being remanufactured, specified as work output or miles. It is the period during which a new locomotive or locomotive engine is required to comply with all applicable emission standards.

Volatile liquid fuel means any liquid fuel other than diesel or biodiesel.

Voluntary emission recall means a repair, adjustment, or modification program voluntarily initiated and conducted by a manufacturer or remanufacturer to remedy any emission-related defect for which notification of locomotive or locomotive engine owners has been provided.

[63 FR 18998, Apr. 16, 1998, as amended at 70 FR 40453, July 13, 2005; 73 FR 37194, June 30, 2008]

§ 92.3 Abbreviations.

The abbreviations of this section apply to all subparts of this part and have the following meanings:

ANSI—American National Standards Institute
API—American Petroleum Institute
ASTM—American Society for Testing and Materials
BHP—Brake horsepower
BSCO—Brake specific carbon monoxide
BSHC—Brake specific hydrocarbons
$BSNO_X$—Brake specific oxides of nitrogen
°C—Celsius
cfh—cubic feet per hour
cfm—cubic feet per minute
CFV—Critical flow venturi
CL—Chemiluminescence
CO—Carbon monoxide
CO_2—Carbon dioxide
cu in—cubic inch(es)
CVS—Constant volume sampler
EP—End point
EPA—Environmental Protection Agency
°F—Fahrenheit
FEL—Family emission limit
FID—Flame ionization detector
ft—foot or feet
g—gram(s)
gal—U.S. gallon
GC—Gas Chromatograph
h—hour(s)
H_2O—water
HC—hydrocarbon
HFID—Heated flame ionization detector
Hg—Mercury
hp—horsepower

IBP—Initial boiling point
in—inch(es)
K—Kelvin
kg—kilogram(s)
km—kilometer(s)
kPa—kilopascal(s)
lb—pound(s)
LPG—Liquified Petroleum Gas
m—meter(s)
max—maximum
mg—milligram(s)
mi—mile(s)
min—minute
ml—milliliter(s)
mm—millimeter
mph—miles per hour
mv—millivolt(s)
N_2—nitrogen
NDIR—Nondispersive infrared
NMHC—Non-methane hydrocarbons
NO—nitric oxide
NO_2—nitrogen dioxide
NO_X—oxides of nitrogen
No.—number
O_2—oxygen
pct—percent
PM—particulate matter
ppm—parts per million by volume
ppmC—parts per million, carbon
psi—pounds per square inch
psig—pounds per square inch gauge
°R—Rankin
rpm—revolutions per minute
s—second(s)
SAE—Society of Automotive Engineers
SI—International system of units (i.e., metric)
THCE—Total hydrocarbon equivalent
U.S.—United States
V—volt(s)
vs—versus
W—watt(s)
wt—weight

§ 92.4 Treatment of confidential information.

(a) Any manufacturer or remanufacturer may assert that some or all of the information submitted pursuant to this part is entitled to confidential treatment as provided by 40 CFR part 2, subpart B.

(b) Any claim of confidentiality must accompany the information at the time it is submitted to EPA.

(c) To assert that information submitted pursuant to this part is confidential, a person or manufacturer or remanufacturer must indicate clearly the items of information claimed confidential by marking, circling, bracketing, stamping, or otherwise specifying the confidential information. Furthermore, EPA requests, but does not require, that the submitter also provide a second copy of its submittal from which all confidential information has been deleted. If a need arises to publicly release nonconfidential information, EPA will assume that the submitter has accurately deleted the confidential information from this second copy.

(d) If a claim is made that some or all of the information submitted pursuant to this part is entitled to confidential treatment, the information covered by that confidentiality claim will be disclosed by EPA only to the extent and by means of the procedures set forth in 40 CFR part 2, subpart B.

(e) Information provided without a claim of confidentiality at the time of submission may be made available to the public by EPA without further notice to the submitter, in accordance with 40 CFR 2.204(c)(2)(i)(A).

§ 92.5 Reference materials.

(a) The documents in paragraph (b) of this section have been incorporated by reference. The incorporation by reference was approved by the Director of the Federal Register in accordance with 5 U.S.C. 552(a) and 1 CFR part 51. Copies may be inspected at U.S. EPA, OAR, 401 M St., SW., Washington, DC 20460, or at the National Archives and Records Administration (NARA). For information on the availability of this material at NARA, call 202–741–6030, or go to: *http://www.archives.gov/federal_register/code_of_federal_regulations/ibr_locations.html.*

(b) The following paragraphs and tables set forth the material that has been incorporated by reference in this part:

(1) *ASTM material.* The following table sets forth material from the American Society for Testing and Materials that has been incorporated by reference. The first column lists the number and name of the material. The second column lists the section(s) of the part, other than this section, in which the matter is referenced. The second column is presented for information only and may not be all inclusive. More recent versions of these standards may be used with advance approval of the Administrator. Copies

of these materials may be obtained from American Society for Testing and Materials, 1916 Race St., Philadelphia, PA 19103. The table follows:

Document number and name	40 CFR part 92 reference
ASTM D 86–95, Standard Test Method for Distillation of Petroleum Products.	§ 92.113
ASTM D 93–94, Standard Test Methods for Flash-Point by Pensky-Martens Closed Cup Tester.	§ 92.113
ASTM D 287–92, Standard Test Method for API Gravity of Crude Petroleum and Petroleum Products (Hydrometer Method).	§ 92.113
ASTM D 445–94, Standard Test Method for Kinematic Viscosity of Transparent and Opaque Liquids (the Calculation of Dynamic Viscosity).	§ 92.113
ASTM D 613–95, Standard Test Method for Cetane Number of Diesel Fuel Oil.	§ 92.113
ASTM D 976–91, Standard Test Method for Calculated Cetane Index of Distillate Fuels.	§ 92.113
ASTM D 1319–95, Standard Test Method for Hydrocarbon Types in Liquid Petroleum Products by Fluorescent Indicator Adsorption.	§ 92.113
ASTM D 1945–91, Standard Test Method for Analysis of Natural Gas by Gas Chromatography.	§ 92.113
ASTM D 2622–94, Standard Test Method for Sulfur in Petroleum Products by X-Ray Spectrometry.	§ 92.113
ASTM D 5186–91, Standard Test Method for Determination of Aromatic Content of Diesel Fuels by Supercritical Fluid Chromatography.	§ 92.113
ASTM E 29–93a, Standard Practice for Using Significant Digits in Test Data to Determine Conformance with Specifications.	§§ 92.9, 92.305, 92.509

(2) *SAE material*. The following table sets forth material from the Society of Automotive Engineers that has been incorporated by reference. The first column lists the number and name of the material. The second column lists the section(s) of the part, other than this section, in which the matter is referenced. The second column is presented for information only and may not be all inclusive. Copies of these materials may be obtained from Society of Automotive Engineers International, 400 Commonwealth Dr., Warrendale, PA 15096–0001. The table follows:

Document number and name	40 CFR part 92 reference
SAE Paper 770141, Optimization of a Flame Ionization Detector for Determination of Hydrocarbon in Diluted Automotive Exhausts, by Glenn D. Reschke.	§ 92.119
SAE Recommended Practice J244, Measurement of Intake Air or Exhaust Gas Flow of Diesel Engines.	§ 92.108

(3) *ANSI material*. The following table sets forth material from the American National Standards Institute that has been incorporated by reference. The first column lists the number and name of the material. The second column lists the section(s) of the part, other than this section, in which the matter is referenced. The second column is presented for information only and may not be all inclusive. More recent versions of these standards may be used with advance approval of the Administrator. Copies of these materials may be obtained from American National Standards Institute, 11 West 42nd St., 13th Floor, New York, NY 10036. The table follows:

Document number and name	40 CFR part 92 reference
ANSI B109.1–1992, Diaphragm Type Gas Displacment Meters.	§ 92.117

§ 92.6 Regulatory structure.

This section provides an overview of the regulatory structure of this part.

(a) The regulations of this part 92 are intended to control emissions from in-use locomotives. Because locomotive chassis and locomotive engines are sometimes manufactured or remanufactured separately, the regulations in this part include some provisions that apply specifically to locomotive engines. However, the use of the term ''locomotive engine'' in the regulations in this part does not limit in any manner the liability of any manufacturer or remanufacturer for the emission performance of a locomotive powered by an engine that it has manufactured or remanufactured.

(b) The locomotives and locomotive engines for which the regulations of this part (i.e., 40 CFR part 92) apply are specified by § 92.1, and by the definitions of § 92.2. The point at which a locomotive or locomotive engine becomes subject to the regulations of this part is determined by the definition of ''new locomotive or new locomotive engine'' in § 92.2. Subpart J of this part contains provisions exempting certain locomotives or locomotive engines from the regulations in this part under special circumstances.

(c) To comply with the requirements of this part, a manufacturer or remanufacturer must demonstrate to EPA that the locomotive or locomotive engine meets the applicable standards of §§92.7 and 92.8, and all other requirements of this part. The requirements of this certification process are described in subparts C and D of this part.

(d) Subpart B of this part specifies procedures and equipment to be used for conducting emission tests for the purpose of the regulations of this part.

(e) Subparts E, F, G, and H of this part specify requirements for manufacturers and remanufacturers after certification; that is during production and use of the locomotives and locomotive engines.

(f) Subpart I of this part contains requirements applicable to the importation of locomotives and locomotive engines.

(g) Subpart K of this part contains requirements applicable to the owners and operators of locomotives and locomotive engines.

(h) Subpart L of this part describes prohibited acts and contains other enforcement provisions relating to locomotives and locomotive engines.

(i) Unless specified otherwise, the provisions of this part apply to all locomotives and locomotive engines subject to the emission standards of this part.

§92.7 General standards.

(a) Locomotives and locomotive engines may not be equipped with defeat devices.

(b) New locomotives fueled with a volatile fuel shall be designed to minimize evaporative emissions during normal operation, including periods when the engine is shut down.

(c)(1) Locomotive hardware for refueling locomotives fueled with a volatile fuel shall be designed so as to minimize the escape of fuel vapors.

(2) Hoses used to refuel gaseous-fueled locomotives shall not be designed to be bled or vented to the atmosphere under normal operating conditions.

(3) No valves or pressure relief vents shall be used on gaseous-fueled locomotives except as emergency safety devices, and these shall not operate at normal system operating flows and pressures.

(d) All new locomotives and new locomotive engines subject to any of the standards imposed by this subpart shall, prior to sale, introduction into service, or return to service, be designed to include features that compensate for changes in altitude to ensure that the locomotives or locomotive engines will comply with the applicable emission standards when operated at any altitude less than 7000 feet above sea level.

§92.8 Emission standards.

(a) *Exhaust standards.* Exhaust emissions from locomotives and locomotive engines, when measured in accordance with the provisions of Subpart B of this part, shall comply with both the applicable line-haul duty-cycle standards, and the applicable switch duty-cycle standards of paragraph (a)(1) (and/or the standards of paragraphs (a)(3) and (a)(4) of this section, as applicable) of this section, and the smoke standards of paragraph (a)(2) of this section. Emissions that do not exceed the standards comply with the standards.

(1) *Gaseous and particulate standards.* Gaseous and particulate emission standards are expressed as gram per brake horsepower hour (g/bhp-hr). Nonmethane hydrocarbon standards apply to locomotives and locomotive engines fueled with natural gas, and any combination of natural gas and other fuels where natural gas is the primary fuel; total hydrocarbon equivalent standards apply to locomotives and locomotive engines fueled with an alcohol, and any combination of alcohol and other fuels where alcohol is the primary fuel. Total hydrocarbon standards apply to all other locomotives and locomotive engines; that is, those not fueled by natural gas or alcohol. The line-haul duty-cycle standards and switch duty-cycle standards apply to the respective cycle-weighted emission rates as calculated in subpart B of this part.

(i) *Tier 0.* The following locomotives (and the engines used in the following locomotives) are subject to the Tier 0 emission standards listed in table A8–1 of this section: Locomotives manufactured on, or after, January 1, 1973, and

before January 1, 2002; and upgraded locomotives manufactured prior to January 1, 1973. The standards apply when such a locomotive or locomotive engine is manufactured, remanufactured, or imported on or after January 1, 2002; except where the locomotive was previously certified to one or more FELs under subpart D of this part instead of the applicable standards, in which case, the applicable standards are replaced at each subsequent remanufacture by the FELs specified by the previous certificate. Example: a locomotive that is certified to a NO_X FEL of 8.0 g/bhp-hr must be recertified to a NO_X FEL of 8.0 g/bhp-hr at each subsequent remanufacture, except as allowed by paragraph (a)(4)(iii) of this section.

(ii) *Tier 1.* Locomotives and engines used in locomotives manufactured on, or after, January 1, 2002, and before January 1, 2005 are subject to the Tier 1 standards listed in table A8–2 of this section. The standards apply when such a locomotive or locomotive engine is manufactured or imported, and each time it is remanufactured; except where the locomotive was previously certified to one or more FELs under subpart D of this part instead of the applicable standard, in which case, the standards are replaced at each subsequent remanufacture by the FELs specified by the previous certificate.

(iii) *Tier 2.* Locomotives and engines used in locomotives manufactured on, or after, January 1, 2005 are subject to the Tier 2 standards listed in table A8–3 of this section. The standards apply when such a locomotive or locomotive engine is manufactured or imported, and each time it is remanufactured except where the locomotive was previously certified to one or more FELs under subpart D of this part instead of the applicable standard, in which case, the standards are replaced at each subsequent remanufacture by the FELs specified by the previous certificate.

(2) *Smoke standards.* The smoke opacity standards listed in table A8–4 of this section apply, as specified in the table, to locomotives and locomotive engines subject to the Tier 0, Tier 1, or Tier 2 standards. Smoke emissions, when measured in accordance with the provisions of subpart B of this part, shall not exceed the standards of table A8–4 of this section.

(3) *Alternate standards.* In lieu of the CO and PM standards specified in paragraph (a)(1) of this section, manufacturers and remanufacturers may elect to comply with the alternate CO and PM standards listed in table A8–5 of this section. Manufacturers and remanufacturers electing to comply with these alternate standards must comply with both the CO and PM standards listed in table A8–5 of this section.

(4) *Averaging, banking and trading.* (i) In lieu of the NO_X and/or PM standards specified in paragraph (a)(1) of this section, manufacturers and remanufacturers may elect to include engine families in the averaging, banking, and trading program, the provisions of which are specified in subpart D of this part. The manufacturer or remanufacturer must set family emission limits (FEL) for the applicable duty-cycle. This FEL serves as the standard for that family.

(ii) When a locomotive is certified to an FEL other than the applicable standard, it must be recertified to that same FEL at all subsequent remanufactures, except as specified otherwise in paragraph (a)(4)(iii) of this section.

(iii) After a locomotive has been certified to any given FEL other than the applicable standard, it may be recertified to a different FEL at a subsequent remanufacture, as allowed by subpart D of this part. For subsequent remanufactures (i.e. those remanufactures that occur after the recertification to a different FEL), the locomotive must be recertified to the FEL(s) and standards that were applicable to the locomotive during its previous useful life, except where specified otherwise by subpart D of this part.

(5) *Tables.* The tables referenced in paragraphs (a) (1) through (3) of this section follow:

TABLE A8–1—TIER 0 STANDARDS

[g/bhp-hr]

	Line-haul [1] cycle standard	Switch cycle standard
NO_X	9.5	14.0
PM	0.60	0.72
CO	5.0	8.0
THC	1.00	2.10
NMHC	1.00	2.10

TABLE A8–1—TIER 0 STANDARDS—Continued

[g/bhp-hr]

	Line-haul [1] cycle standard	Switch cycle standard
THCE	1.00	2.10

[1] Line-haul standards do not apply to Tier 0 switch locomotives.

TABLE A8–2—TIER 1 STANDARDS

[g/bhp-hr]

	Line-haul cycle standard	Switch cycle standard
NO_X	7.4	11.0
PM	0.45	0.54
CO	2.2	2.5
THC	0.55	1.20
NMHC	0.55	1.20
THCE	0.55	1.20

TABLE A8–3—TIER 2 STANDARDS

[g/bhp-hr]

	Line-haul cycle standard	Switch cycle standard
NO_X	5.5	8.1
PM	0.20	0.24
CO	1.5	2.4
THC	0.30	0.60
NMHC	0.30	0.60
THCE	0.30	0.60

TABLE A8–4—SMOKE STANDARDS FOR LOCOMOTIVES

[Percent Opacity]

	Steady-state	30-sec peak	3-sec peak
Tier 0	30	40	50
Tier 1	25	40	50
Tier 2	20	40	50

TABLE A8–5—ALTERNATE CO AND PM STANDARDS

[g/bhp-hr]

	Line-haul cycle		Switch cycle	
	CO	PM	CO	PM
Tier 0	10.0	0.30	12.0	0.36
Tier 1	10.0	0.22	12.0	0.27
Tier 2	10.0	0.10	12.0	0.12

(b) No crankcase emissions shall be discharged directly into the ambient atmosphere from any new locomotive or new locomotive engine, except as allowed by paragraph (1) of this paragraph (b).

(1) Discharge of crankcase emissions into the engine exhaust complies with this prohibition, provided crankcase emissions are measured and included with exhaust emissions. Other discharge of crankcase emissions complies with this prohibition, provided crankcase emissions are measured in all certification, production-line, and in-use tests and the masses are added mathematically to the exhaust emissions.

(2) Compliance with this standard is required throughout the entire service life of the locomotive or locomotive engine.

(c) *Notch standards.* (1) Exhaust emissions from locomotives and locomotive engines shall not exceed the notch standards set forth in paragraph (c)(2) of this section, except as allowed in paragraph (c)(3) of this section, when measured using any test procedures under any test conditions.

(2) Notch standards for each pollutant for each notch are calculated from the certified notch emission rate as follows:

$$\text{Notch standard}=(E_x)\times(1.1+(1-E_{LHx}/\text{std}))$$

Where:

E_x=The deteriorated brake-specific emission rate (for pollutant x) for the notch (i.e., the brake-specific emission rate calculated under subpart B of this part, multplied by the deterioration factor in the application for certification expressed as a multiplicative deterioration factor); where x is NO_X. HC (or NMHC or THCE, as applicable), CO or PM.

E_{LHx}=The deteriorated line-haul duty-cycle weighted brake-specific emission rate for pollutant x, as reported in the application for certification.

std=The applicable line-haul duty-cycle standard, or the certified line-haul duty-cycle FEL for locomotives or locomotive engines participating in the averaging, banking and trading program for NOx or PM.

(3) Where exhaust emissions exceed the notch standards set forth in paragraph (c)(2) of this section, the locomotive or locomotive engine is considered to be in compliance with such standards only if:

(i) The same emission controls are applied during the test conditions causing the noncompliance as were applied during certification test conditions (and to the same degree); or

(ii) The exceeding emissions result from a design feature that was described (including its effect on emissions) in the approved application for certification, and is necessary for safety or is otherwise allowed by this part.

[63 FR 18998, Apr. 16, 1998, as amended at 70 FR 40453, July 13, 2005]

§ 92.9 Compliance with emission standards.

(a) The general standards in § 92.7 and the emission standards in § 92.8 apply to the emissions from new locomotives and new locomotive engines for their useful life. The useful life is specified as MW-hrs and years, and ends when either of the values (MW-hrs or years) is exceeded.

(1) The minimum useful life in terms of MW-hrs is equal to the product of the rated horsepower multiplied by 7.50. The minimum useful life in terms of years is ten years. For locomotives or locomotive engines originally manufactured before January 1, 2000 and not equipped with MW-hr meters, the minimum useful life is equal to 750,000 miles or ten years, whichever is reached first.

(2) The certifying manufacturer or remanufacturer shall specify a longer useful life if the locomotive or locomotive engine is designed to last longer than the applicable minimum useful life. A manufacturer's or remanufacturer's recommended time to remanufacture which is longer than the minimum useful life is one indicator of a longer design life.

(3) Manufacturers and remanufacturers of non-locomotive-specific engines (as defined in § 92.2) may petition the Administrator prior to certification to allow a shorter useful life for an engine family containing only non-locomotive-specific engines. This petition must include the full rationale behind the request together with any other supporting evidence. Based on this or other information, the Administrator may allow a shorter useful life.

(4) Remanufacturers of locomotive or locomotive engine configurations that have been previously certified under paragraph (a)(3) of this section to a useful life that is shorter than the value specified in paragraph (a)(1) of this section may certify to that same useful life value without request.

(b) *Certification.* Certification is the process by which manufacturers and remanufacturers apply for and obtain certificates of conformity from EPA that allow the manufacturer or remanufacturer to introduce into commerce new locomotives and/or new locomotive engines for sale or use in the U.S.

(1)(i) Compliance with the applicable emission standards by an engine family must be demonstrated by the certifying manufacturer or remanufacturer before a certificate of conformity may be issued under § 92.208.

(A) Manufacturers shall demonstrate compliance using emission data, measured using the procedures specified in subpart B of this part, from a low mileage locomotive, or a development engine (that is equivalent in design to the locomotive engines being certified), or another low hour engine.

(B) Remanufacturers shall demonstrate compliance using emission data, measured using the procedures specified in subpart B of this part, from a low mileage remanufactured locomotive, or a development engine (that is equivalent in design to the locomotive engines being certified), or another low hour remanufactured engine that was remanufactured in the manner specified in the application for certification.

(ii) The emission values to compare with the standards shall be the emission values of a low mileage locomotive, or development engine, or low hour locomotive engine, adjusted by the deterioration factors developed in accordance with the provisions of paragraph (b)(2) of this section. Before any emission value is compared with the standard, it shall be rounded, in accordance with ASTM E 29–93a (incorporated by reference at § 92.5), to the same number of decimal places as contained in the applicable standard.

(2) Exhaust emission deterioration factors shall be determined by the certifying manufacturer or remanufacturer for each engine family. The manufacturer's or remanufacturer's determination is subject to the requirements of paragraph (b)(2)(iv) of this

section. The deterioration factor relates emissions from low mileage or low hour data to emissions at the end of useful life. If certification data is obtained from a development engine, and the emissions performance of that engine is significantly different from a typical low hour engine, then the deterioration factors may be adjusted for the purpose of certification.

(i) A separate exhaust emission deterioration factor shall be established, as required, for compliance with applicable emission standards for HC, THCE, NMHC, CO, NO_X. particulate and smoke for each engine family.

(ii)(A) For locomotives or locomotive engines not utilizing aftertreatment technology (e.g., catalyst). For HC, THCE, NMHC, CO, NO_X. and PM, additive deterioration factors shall be used; that is, a deterioration factor that when added to the low mileage emission rate equals the emission rate at the end of useful life. However, if the deterioration factor supplied by the manufacturer or remanufacturer is less than zero, it shall be zero for the purposes of this section.

(B) For locomotives or locomotive engines utilizing aftertreatment technology (e.g., catalyst). For HC, THCE, NMHC, CO, NO_X. and PM, Multiplicative deterioration factors shall be used; that is deterioration factors that when multiplied by the low mileage emission rate equal the emission rate at the end of useful life. However, if the deterioration factor supplied by the manufacturer or remanufacturer is less than one, it shall be one for the purposes of this paragraph (b).

(C) For all locomotives and locomotive engines. For smoke, additive deterioration factors shall be used. However, if the deterioration factor supplied by the manufacturer or remanufacturer is less than zero, it shall be zero for the purposes of this paragraph (b).

(iii) In the case of a multiplicative exhaust emission deterioration factor, the factor shall be rounded to three places to the right of the decimal point in accordance with ASTM E 29–93a (incorporated by reference at §92.5). In the case of an additive exhaust emission deterioration factor, the factor shall be established to a minimum of two places to the right of the decimal in accordance with ASTM E 29–93a (incorporated by reference at §92.5).

(iv) Every deterioration factor must be, in the Administrator's judgement, consistent with emissions increases observed in-use based on emission testing of similar locomotives or locomotive engines. Deterioration factors that predict emission increases over the useful life of a locomotive or locomotive engine that are significantly less than the emission increases over the useful life observed from in-use testing of similar locomotives or locomotive engines shall not be used.

[63 FR 18998, Apr. 16, 1998, as amended at 73 FR 59183, Oct. 8, 2008]

§92.10 Warranty period.

Warranties imposed by §92.1107 shall apply for at least the first third of the full useful life of the locomotive or locomotive engine, or for the same period during which the manufacturer or remanufacturer provides any other mechanical warranty, whichever is longer. A copy of the manufacturer's or remanufacturer's warranty shall be submitted with the application for certification.

§92.11 Compliance with emission standards in extraordinary circumstances.

The provisions of this section are intended to address problems that could occur near the date on which more stringent emission standards become effective, such as the transition from the Tier 1 standards to the Tier 2 standards on January 1, 2005.

(a) In appropriate extreme and unusual circumstances which are clearly outside the control of the manufacturer and which could not have been avoided by the exercise of prudence, diligence, and due care, the Administrator may permit a manufacturer, for a brief period, to introduce into commerce locomotives which do not comply with the applicable emission standards if:

(1) The locomotives cannot reasonably be manufactured in such a manner that they would be able to comply with the applicable standards;

(2) The manufacture of the locomotives was substantially completed

prior to the applicability date of the standards from which the manufacturer seeks relief;

(3) Manufacture of the locomotives was previously scheduled to be completed at such a point in time that locomotives would have been included in the previous model year, such that they would have been subject to less stringent standards, and that such schedule was feasible under normal conditions;

(4) The manufacturer demonstrates that the locomotives comply with the less stringent standards that applied to the previous model year's production described in paragraph (a)(3) of this section, as prescribed by subpart C of this part (i.e., that the locomotives are identical to locomotives certified in the previous model year);

(5) The manufacturer exercised prudent planning and was not able to avoid the violation and has taken all reasonable steps to minimize the extent of the nonconformity; and

(6) The manufacturer receives approval from EPA prior to introducing the locomotives into commerce.

(b) Any manufacturer seeking relief under this section shall notify EPA as soon as it becomes aware of the extreme or unusual circumstances.

(c)(1) Locomotives for which the Administrator grants relief under this section shall be included in the engine family for which they were originally intended to be included.

(2) Where the locomotives are to be included in an engine family that was certified to an FEL above the applicable standard, the manufacturer shall reserve credits to cover the locomotives covered by this section, and shall include the required information for these locomotives in the end-of-year report required by subpart D of this part.

(d) In granting relief under this section, the Administrator may also set other conditions as he/she determines to be appropriate, such as requiring payment of fees to negate an economic gain that such relief would otherwise provide to the manufacturer.

§ 92.12 Interim provisions.

Notwithstanding other provisions of this part, the following provisions apply as specified to locomotives and locomotive engines subject to the provisions of this part:

(a) *Tier 0 standards.* In addition to the requirements of § 92.8(a)(1)(i), the following new locomotives and new locomotive engines are subject to the Tier 0 emission standards of § 92.8. The requirements of this paragraph do not apply to passenger locomotives. The requirements of this paragraph (a) provide manufacturers of freshly manufactured locomotives two options for compliance. The first option is to comply with the requirements of paragraphs (a) (1) and (2) of this section, which has the effect of requiring compliance with Tier 0 standards on average beginning on January 1, 2001 for all freshly manufactured and remanufactured locomotives originally manufactured on or after January 1, 1994. The second option requires compliance with the requirements of paragraph (a)(3) of this section that the manufacturer make a remanufacturing system available at a reasonable cost for its primary model for the 1994 through 1997 production period prior to January 1, 2000, and to apply the same emission controls to its new production of similar locomotives. Manufacturers complying with paragraph (a)(3) of this section would be allowed to manufacture and remanufacture other locomotives without a certificate of conformity, prior to January 1, 2002, except as required by paragraph (a)(2)(ii) of this section. Manufacturers may comply with paragraph (a)(3) of this section through compliance with the provisions of paragraph (a)(5) of this section.

(1) *Freshly manufactured locomotives.* Except as provided in paragraph (a)(3) of this section, all freshly manufactured locomotives manufactured on or after January 1, 2001 must comply with the emission standards listed in Table A8–1 of § 92.8 and all other applicable requirements of this part.

(2) *Remanufactured locomotives.* The following locomotives (and engines used in the following locomotives) must comply with the emission standards listed in Table A8–1 of § 92.8 and all other applicable requirements of this part:

(i) Locomotives originally manufactured on or after January 1, 1994, that

are remanufactured on or after January 1, 2001; and

(ii) Locomotives originally manufactured on or after January 1, 1990 for which a remanufacturing system has been certified to Tier 0 standards and is available for use at reasonable cost.

(3) *New model exemption*. (i) Freshly manufactured locomotive models not introduced for widespread production prior to January 1, 1998 are exempt from the requirements of paragraph (a)(1) of this section provided the manufacturer of the locomotive:

(A) Has obtained a certificate of conformity and made available for use at reasonable cost before January 1, 2000, a remanufacturing system for its primary locomotive model (including its primary engine model) originally manufactured between January 1, 1994 and January 1, 1998; and

(B) Complies with the emission standards listed in Table A8–1 of §92.8 and all applicable requirements of this part for all freshly manufactured locomotives manufactured on or after January 1, 2000 that are similar to the primary model described in paragraph (a)(3)(i)(A) of this section.

(ii) New locomotives and locomotive engines that are manufactured and remanufactured by a manufacturer that complies with the requirements of paragraphs (a)(3)(i) (A) and (B) of this section, and that are not similar to the locomotive models identified in paragraphs (a)(3)(i) (A) and (B) of this section are exempt from the requirements of paragraphs (a)(1) and (a)(2)(i) of this section.

(4) Make available at a reasonable cost means to make a certified remanufacturing system available for use where:

(i) The total cost to the owner and user of the locomotive (including initial hardware, increased fuel consumption, and increased maintenance costs) during the useful life of the locomotive is less than $220,000; and

(ii) The initial hardware costs are reasonably related to the technology included in the remanufacturing system and are less than $50,000 for 2-stroke locomotives and 4-stroke locomotives equipped with split cooling systems, or $125,000 for 4-stroke locomotives not equipped with split cooling systems; and

(iii) The system will not increase fuel consumption by more than 3 percent; and

(iv) The remanufactured locomotive will have reliability throughout its useful life that is similar to the reliability the locomotive would have had if it had been remanufactured without the certified remanufacture system.

(5)(i) Instead of the provisions of paragraph (a)(3) of this section, a manufacturer may comply with the emissions standards listed in Table A8–1 of §92.8 and all other applicable requirements of this part with respect to any combination of locomotive models that are manufactured or remanufactured on or after January 1, 2000, provided that the manufacturer has demonstrated to the satisfaction of the Administrator that such locomotives will produce greater emissions reductions than would otherwise occur through compliance with paragraph (a)(3) of this section.

(ii) New locomotives and locomotive engines that are manufactured and remanufactured by a manufacturer that complies with the requirements of paragraph (a)(5)(i) of this section, and that are not similar to the locomotive models identified in paragraph (a)(5)(i) of this section, are exempt from the requirements of paragraphs (a)(1) and (a)(2)(i) of this section.

(b) *Production line and in-use testing*. (1) The requirements of Subpart F of this part (i.e., production line testing) do not apply prior to January 1, 2002.

(2) The testing requirements of subpart F of this part (i.e., production line testing) do not apply to small manufacturers/remanufacturers prior to January 1, 2013. Note that the production line audit requirements apply as specified.

(3) The requirements of Subpart G of this part (i.e., in-use testing) only apply for locomotives and locomotive engines that become new on or after January 1, 2002.

(4) For locomotives and locomotive engines that are covered by a small business certificate of conformity, the requirements of Subpart G of this part (i.e., in-use testing) only apply for locomotives and locomotive engines that

become new on or after January 1, 2007. We will also not require small remanufacturers to perform any in-use testing prior to January 1, 2013.

(c) *Small business certificates of conformity.* (1) Prior to January 1, 2007, small remanufacturers (as defined in § 92.2) may use a modified version of the federal test procedures of subpart B of this part to obtain certificates of conformity. Such certificates are valid only for production that occurs prior to January 1, 2007. Specifically, the following modifications are allowed:

(i) Measurement of HC, CO, and PM may be omitted;

(ii) Dynamometers are not required to meet the specifications of subpart B of this part, provided their design and use is consistent with good engineering practice;

(iii) Other modifications that are necessary because of excessive costs or technical infeasibility may be approved by the Administrator prior to the start of testing.

(2)(i) Small remanufacturers may use test procedures other than those specified in subpart B of this part or in paragraph (c)(1) of this section to obtain certificates of conformity, provided that the test procedures are consistent with good engineering practice, and are approved by the Administrator prior to the start of testing. Such certificates are valid only for production that occurs prior to January 1, 2007.

(ii) The total number of locomotives and locomotive engines that may be remanufactured under a certificate of conformity issued based on the testing described in paragraph (c)(2)(i) of this section shall be subject to the following annual limits for each individual remanufacturer: No more than 300 units in 2003, no more than 200 units in 2004, no more than 100 units in 2005, no more than 50 units in 2006. These sales limits apply to the combined number of locomotives and locomotive engines remanufactured within the calendar year that are covered by an individual remanufacturer's certificates issued under paragraph (c)(2)(i) of this section.

(3) Upon request, and prior to January 1, 2007, the Administrator may modify other certification requirements, as appropriate, for small remanufacturers.

(4) Remanufacturers certifying under this paragraph (c) shall provide along with their application for certification a brief engineering analysis describing the emission control technology to be incorporated in the remanufactured locomotive or locomotive engine, and demonstrating that such controls will result in compliance with the applicable standards.

(d) *Early banking of emission credits.* (1) Consistent with the provisions of subpart D of this part, NOx and PM emission credits may be generated from Tier 0 locomotives and locomotive engines prior to the applicable effective compliance date of the Tier 0 standard (i.e., the effective compliance date in § 92.8(a)(1)(i) or the effective compliance dates of paragraph (a) of this section, as applicable), relative to baseline emission rates.

(2)(i) Credits generated under this paragraph (d) that are granted or transferred to the owner or primary operator of the locomotives or locomotive engines generating credits may be used without restriction.

(ii) Credits generated under this paragraph (d) that are not granted or transferred to the owner or primary operator of the locomotives or locomotive engines generating credits may not be used for compliance with the Tier 0 standards for 2002 or later model years.

(3)(i) Prior to January 1, 2000, the provisions of this paragraph (d) apply to all locomotives and locomotive engines.

(ii) During the period January 1, 2000 through December 31, 2001, the provisions of this paragraph (d) apply only to engine families that include only locomotives and/or locomotive engines originally manufactured prior to January 1, 1990.

(iii) The provisions of this paragraph (d) other than the provisions of paragraph (d)(2) of this section do not apply to any locomotives and locomotive engines manufactured or remanufactured on or after January 1, 2002.

(4)(i) NO_X credits generated under this paragraph (d) shall be calculated as specified in § 92.305, except that the

applicable standard shall be replaced by:

(A) 10.5 g/bhp-hr for the line-haul cycle standards, and 14.0 g/bhp-hr for the switch standards; or

(B) For remanufactured locomotives, a measured baseline emission rate for the configuration with the lowest NO_X emission rate in the applicable engine family that is approved in advance by the Administrator.

(ii) PM credits generated under this paragraph (d) shall be calculated as specified in §92.305, except that the applicable standard shall be replaced by:

(A) 0.20 g/bhp-hr for the line-haul cycle standards, and 0.24 g/bhp-hr for the switch standards; or

(B) For remanufactured locomotives, a measured baseline emission rate for the configuration with the lowest NO_X emission rate in the applicable engine family that is approved in advance by the Administrator.

(iii) The proration factor for all credits generated under this paragraph (d) shall be 0.143.

(5) Locomotives and locomotive engines generating credits under this paragraph (d) must meet all applicable requirements of this part.

(e) *Particulate notch standards.* For model year 2006 and earlier locomotives, the particulate notch standard shall be calculated as:

$$\text{Notch standard} = (E_X) \times (1.2 + (1 - E_{LHx}/\text{std}))$$

(f) *Passenger locomotives.* Passenger locomotives originally manufactured before January 1, 2002 are exempt from the requirements and prohibitions of this part for model years through 2006. New passenger locomotives and locomotive engines produced on or after January 1, 2007 shall comply with all applicable requirements of this part.

(g) *Tier 0 locomotive labels.* Remanufacturers may use identical labels for locomotives and engines for Tier 0 locomotives, provided the remanufacturer demonstrates to EPA that they will supply two labels (one for the locomotive and one for the engine) only with those remanufacturing systems being applied to locomotives that have not been previously labeled (i.e., locomotives that have not been previously certified). For other locomotives, the remanufacturer may only supply one label.

(h) *Labels for calendar year 2005.* During calendar year 2005, manufacturers and remanufacturers may comply with the labeling requirements that were applicable during calendar year 2004, instead of the labeling requirements specified in §92.212(c)(2)(v).

(i) *Diesel test fuels.* Manufacturers and remanufacturers may use LSD or ULSD test fuel to certify to the standards of this part, instead of the otherwise specified test fuel, provided PM emissions are corrected as described in this paragraph (i). Measure your PM emissions and determine your cycle-weighted emission rates as specified in subpart B of this part. If you test using LSD, add 0.04 g/bhp-hr to these weighted emission rates to determine your official emission result. If you test using ULSD, add 0.05 g/bhp-hr to these weighted emission rates to determine your official emission result.

(j) *Subchapter U provisions.* For model years 2008 through 2012, certain locomotives will be subject to the requirements of this part 92 while others will be subject to the requirements of 40 CFR subchapter U. This paragraph (j) describes allowances for manufacturers or remanufacturers to ask for flexibility in transitioning to the new regulations.

(1) You may ask to use a combination of the test procedures of this part and those of 40 CFR part 1033. We will approve your request if you show us that it does not affect your ability to show compliance with the applicable emission standards. Generally this requires that the combined procedures would result in emission measurements at least as high as those that would be measured using the procedures specified in this part. Alternatively, you may demonstrate that the combined effects of the procedures is small relative to your compliance margin (the degree to which your locomotives are below the applicable standards).

(2) You may ask to comply with the administrative requirements of 40 CFR part 1033 and 1068 instead of the equivalent requirements of this part.

[63 FR 18998, Apr. 16, 1998, as amended at 70 FR 40453, July 13, 2005; 73 FR 37194, June 30, 2008]

Subpart B—Test Procedures

§ 92.101 Applicability.

Provisions of this subpart apply to tests performed by the Administrator, certificate holders, other manufacturers and remanufacturers of locomotives or locomotive engines, railroads (and other owners and operators of locomotives), and their designated testing laboratories. This subpart contains gaseous emission test procedures, particulate emission test procedures, and smoke test procedures for locomotives and locomotive engines.

§ 92.102 Definitions and abbreviations.

The definitions and abbreviations of subpart A of this part apply to this subpart. The following definitions and abbreviations, as well as those found in § 92.132 (Calculations), also apply:

Accuracy means the difference between the measured value and the true value, where the true value is determined from NIST traceable measurements where possible, or otherwise determined by good engineering practice.

Calibration means the act of calibrating an analytical instrument using known standards.

Calibration gas means a gas of known concentration which is used to establish the response curve of an analyzer.

Good engineering practice means those methods and practices which the Administrator determines to be consistent with scientific and engineering principles.

Hang-up refers to the process of hydrocarbon molecules being adsorbed, condensed, or by any other method removed from the sample flow prior to reaching the instrument detector. It also refers to any subsequent desorption of the molecules into the sample flow when they are assumed to be absent.

Parts per million, carbon or *ppmC* means the concentration of an organic compound in a gas expressed as parts per million (by volume or by moles) multiplied by the number of carbon atoms in a molecule of that compound.

Precision means the standard deviation of replicated measurements, or one-half of the readability, whichever is greater; except where explicitly noted otherwise.

Readability means the smallest difference in measured values that can be detected. For example, the readability for a digital display with two decimal places would be 0.01.

Span gas means a gas of known concentration which is used routinely to set the output level of an analyzer.

Standard conditions and *standard temperature and pressure* mean 68 °F (20 °C) and 29.92 in Hg. (101.3 kPa).

§ 92.103 Test procedures; overview.

(a) This subpart contains procedures for exhaust emission tests of locomotives and locomotive engines. The procedures specified here are intended to measure brake-specific mass emissions of organic compounds (hydrocarbons for locomotives using petroleum diesel fuel), oxides of nitrogen, particulates, carbon monoxide, carbon dioxide, and smoke in a manner representative of a typical operating cycle.

(b)(1) The sampling systems specified in this subpart are intended to collect representative samples for analysis, and minimize losses of all analytes.

(i) For gaseous emissions, a sample of the raw exhaust is collected directly from the exhaust stream and analyzed during each throttle setting.

(ii) Particulates are collected on filters following dilution with ambient air of a separate raw exhaust sample.

(2) Analytical equipment is identical for all fuel types, with the exception of the systems used to measure organics (*i.e.*, hydrocarbons, alcohols, and aldehydes); diesel-fueled and biodiesel-fueled locomotives *Parts per million* and locomotive engines require a heated, continuous hydrocarbon detector; natural gas-fueled locomotives and locomotive engines require a continuous hydrocarbon detector and a methane detector; alcohol-fueled locomotives and locomotive engines require a heated hydrocarbon detector, alcohol sampling and detection systems, and aldehyde sampling and detection systems. Necessary equipment and specifications appear in §§ 92.105 through 92.111.

(3) Fuel specifications for emission testing are specified in § 92.113. Analytical gases are specified in § 92.112.

(c) The power produced by the engine is measured at each throttle setting.

(d) The fuel flow rate for each throttle setting is measured in accordance with § 92.107.

(e) Locomotives and locomotive engines are tested using the test sequence as detailed in §§ 92.124 and 92.126.

(f) Alternate sampling and/or analytical systems may be used if shown to yield equivalent results, and if approved in advance by the Administrator. Guidelines for determining equivalency are found in Appendix IV of this part.

(g) At the time of the creation of this part, essentially all locomotives and locomotive engines subject to the standards of this part were designed to use diesel fuel. Therefore, the testing provisions of this subpart focus primarily on that fuel. Some provisions for fuels other than diesel are also included. If a manufacturer or remanufacturer of locomotives or locomotive engines, or a user of locomotives, or other party wishes or intends to use a fuel other than diesel in locomotives or locomotive engines, it shall notify the Administrator, who shall specify those changes to the test procedures that are necessary for the testing to be consistent with good engineering practice. The changes made under this paragraph (g) shall be limited to:

(1) Exhaust gas sampling and analysis;

(2) Test fuels; and

(3) Calculations.

§ 92.104 Locomotive and engine testing; overview.

(a) The test procedures described here include specifications for both locomotive testing and engine testing. Unless specified otherwise in this subpart, all provisions apply to both locomotive and engine testing.

(b)(1) The test procedures for engine testing are intended to produce emission measurements that are essentially identical to emission measurements produced during locomotive testing using the same engine configuration. The following requirements apply for all engine tests:

(i) Engine speed setpoints for each mode shall be within 2 percent of the speed of the engine when it is operated in the locomotive. Engine load setpoints for each mode shall be within 2 percent (or 3.0 horsepower, whichever is greater) of the load of the engine when it is operated in the locomotive.

(ii) The temperature of the air entering the engine after any charge air cooling shall be within 5 °F of the typical intake air temperature when the engine is operated in the locomotive under similar ambient conditions. Auxiliary fan(s) may be used to maintain engine cooling during operation on the dynamometer.

(iii) The engine air inlet system used during testing shall have an air inlet restriction within 1 inch of water of the upper limit of a typical engine as installed with clean air filters, as established by the manufacturer or remanufacturer for the engine being tested.

(2) Testers performing engine testing under this subpart shall not use test procedures otherwise allowed by the provisions of this subpart where such procedures are not consistent with good engineering practice and the regulatory goal specified in paragraph (b)(1) of this section.

(c) Provisions that specify different requirements for locomotive and/or engine testing are described in §§ 92.106, 92.108(a) and (b)(1), 92.111(b)(2) and (c), 92.114(a)(2)(ii), (b)(3)(ii), (c)(2)(iii)(A) and (d), 92.115(c), 92.116, 92.123(a)(2) and (b), 92.124(d), 92.125(a) and (b), 92.126(a)(7)(iii)(A).

[63 FR 18998, Apr. 16, 1998, as amended at 70 FR 40453, July 13, 2005]

§ 92.105 General equipment specifications.

(a) *Chart recorders.* (1) The recommended minimum chart speed for gaseous measurements is 1 cm per minute. (Higher chart speeds are required for smoke measurements during the acceleration phases of the test sequence.)

(2) All chart recorders (analyzers, torque, rpm, etc.) shall be provided with automatic markers which indicate ten second intervals. Preprinted chart paper (ten second intervals) may be used in lieu of the automatic markers provided the correct chart speed is used. (Markers which indicate 1 second

intervals are required for smoke measurements during the acceleration phases of the test sequence.)

(b) *Automatic data collection.* (1) In lieu of the use of chart recorders, automatic data collection equipment may be used to record all required data. The automatic data collection equipment must be capable of sampling at least two records per second.

(2) Other means may be used provided they produce a permanent visual data record of a quality equal to or better than those required by this subpart (e.g., tabulated data, traces, or plots).

(c) *Temperature measurements.* (1) The following temperature measurements shall be accurate to within 1.0 °F (0.6 °C):

(i) Temperature measurements used in calculating the engine intake humidity;

(ii) The temperature of the fuel, in volume measuring flow rate devices;

(iii) The temperature of the sample within the water trap(s);

(iv) Temperature measurements used to correct gas volumes (e.g., to standard conditions) or to calculate mass or moles of a sample.

(2) All other temperature measurements shall be accurate within 3.0 °F (1.7 °C).

(d) *Electrical measurements.* Instruments used to measure engine power output shall comply with the requirements of § 92.106.

(e) *Pressure measurements.* (1) Gauges and transducers used to measure any pressures used to correct gas volumes (e.g., to standard conditions) or to calculate mass or moles of a sample shall have an accuracy and precision of 0.1 percent of absolute pressure at point or better.

(2) Gauges and transducers used to measure any other pressures shall have an accuracy and precision of 1 percent of absolute pressure at point or better.

[63 FR 18998, Apr. 16, 1998, as amended at 70 FR 40453, July 13, 2005]

§ 92.106 Equipment for loading the engine.

For purposes of placing the required load on the engine during an emissions test, either the equipment specified in paragraph (a) of this section, or the equipment specified in paragraph (b) of this section may be used.

(a) *Locomotive testing.* (1) The equipment required for loading the locomotive engine-alternator/generator assembly electrically, and for measurement of the electrical power output from the alternator/generator consists of the following, either in total or in part: electrical resistance load bank; fans or other means for cooling of the load bank; wattmeter, including phase angle compensation; meter(s) for measurement of the current through the load bank (a calibrated electrical shunt and voltmeter is allowed for current measurement); meter(s) to measure the voltage across the load bank; and electrical cable to connect the alternator/generator to the load bank. Many locomotives are equipped with an internal electrical resistance load bank and fans for cooling of the load bank; when so equipped, the locomotive load bank may be used for purposes of loading the engine during emissions tests.

(2) The combination of instruments (meters) used to measure engine or alternator/generator power output (wattmeter, ammeter, voltmeter) shall have accuracy and precision such that the accuracy of the measured alternator/generator power out is better than:

(i) 2 percent of point at all power settings except idle and dynamic brake; and

(ii) Less accuracy and precision is allowed at idle and dynamic brake, consistent with good engineering practice. Equipment with accuracy or precision worse than 20 percent of point is not allowed.

(3) The efficiency curve for the alternator/generator, shall specify the efficiency at each test point. The manufacturer or remanufacturer shall provide EPA with a detailed description of the procedures used to establish the alternator/generator efficiency.

(b) *Engine testing.* (1) For engine testing using a dynamometer, the engine dynamometer system must be capable of controlling engine torque and speed simultaneously under steady speed operation, during accelerations where the rate of change in torque and speed is representative of those changes which occur when the engine is operating in a

locomotive. It must also be capable of performing the test sequence described in this subpart. In addition to these general requirements, the engine or dynamometer readout signals for speed and torque shall meet the following accuracy specifications:

(i) Engine speed readout shall be accurate to within ±2 percent of the absolute standard value, as defined in § 92.116 of this part.

(ii) Engine flywheel torque readout shall be accurate to within ±2 percent of the NIST ''true'' value torque at all power settings above 10 percent of full-scale, and accurate to within ±5 percent of the NIST ''true'' value torque at power settings at or below 10 percent of full-scale.

(2) For engine testing using a locomotive alternator/generator instead of a dynamometer, the equipment used shall comply with the requirements of paragraph (a) of this section.

[63 FR 18998, Apr. 16, 1998, as amended at 70 FR 40453, July 13, 2005]

§ 92.107 Fuel flow measurement.

(a) *Fuel flow measurement for locomotive and engine testing.* The rate of fuel consumption by the engine must be measured with equipment conforming to the following:

(1) The fuel flow rate measurement instrument must have a minimum accuracy of ±2 percent of measurement flow rate for each measurement range used. An exception is allowed at idle where the minimum accuracy is ±10 percent of measured flow rate for each measurement range used. The measurement instrument must be able to comply with this requirement with an averaging time of one minute or less, except for idle, dynamic brake, and notches 1 and 2 where the instrument must be able to comply with this requirement with an averaging time of three minutes or less.

(2) The controlling parameters are the elapsed time measurement of the event and the weight or volume measurement. Restrictions on these parameters are:

(i) The error in the elapsed time measurement of the event must not be greater than 1 percent of the absolute event time. This includes errors in starting and stopping the clock as well as the period of the clock.

(ii) If the mass of fuel consumed is measured by discrete weights, then the error in the actual weight of the fuel consumed must not be greater than ±1 percent of the measuring weight. An exception is allowed at idle, where the error in the actual weight of the fuel consumed must not be greater than ±2 percent of the measuring weight.

(iii) If the mass of fuel consumed is measured electronically (load cell, load beam, etc.), the error in the actual weight of fuel consumed must not be greater than ±1 percent of the full-scale value of the electronic device.

(iv) If the mass of fuel consumed is measured by volume flow and density, the error in the actual volume consumed must not be greater than ±1 percent of the full-scale value of the volume measuring device.

(3) For devices that have varying mass scales (electronic weight, volume, density, etc.), compliance with the requirements of paragraph (a)(1) of this section may require a separate flow measurement system for low flow rates.

(b) *Calibration.* Fuel flow rate measurement devices shall be calibrated against an independent measurement of the total mass of fuel dispensed during a fixed amount of time in accordance with the following provisions:

(1) Measurement of the total mass shall have an accuracy and precision of 1 percent of point, or better.

(2) Fuel measurements shall be performed for at least 10 flow rates evenly distributed over the entire range of fuel flow rates used during testing.

(3) For each flow rate, either the total mass of fuel dispense must exceed 5.0 kilograms (11.0 pounds), or the length of time during which the fuel is dispensed must exceed 30 minutes. In all cases, the length of time during which fuel is dispensed must be at least 180 seconds.

§ 92.108 Intake and cooling air measurements.

(a) *Intake air flow measurement.* Measurement of the flow rate of intake air into the engine is allowed for engine testing, but not required. When it is

measured, the measurement technique shall conform to the following:

(1) The air flow measurement method used must have a range large enough to accurately measure the air flow over the engine operating range during the test. Overall measurement accuracy must be ±2 percent of full-scale value of the measurement device for all modes except idle. For idle, the measurement accuracy shall be ±5 percent or less of the full-scale value. The Administrator must be advised of the method used prior to testing.

(2) Corrections to the measured air mass flowrate shall be made when an engine system incorporates devices that add or subtract air mass (air injection, bleed air, etc.). The method used to determine the air mass from these devices shall be approved by the Administrator.

(3) Measurements made in accordance with SAE recommended practice J244 (incorporated by reference at § 92.5) are allowed.

(b) *Humidity and temperature measurements.* (1) Air that has had its absolute humidity altered is considered humidity-conditioned air. For this type of intake air supply, the humidity measurements must be made within the intake air supply system, and after the humidity conditioning has taken place.

(2) Humidity measurements for nonconditioned intake air supply systems shall be made as closely as possible to the point at which the intake air stream enters the locomotive, or downstream of that point.

(3) Temperature measurements of engine intake air, engine intake air after compression and cooling in the charge air cooler(s) (engine testing only), and air used to cool the charge air after compression, and to cool the engine shall be made as closely as possible to obtain accurate results based on engineering judgement. Measurement of ambient temperature for locomotive testing shall be made within 48 inches of the locomotive, at a location that minimizes the effect of heat generated by the locomotive on the measured temperature.

(4) Temperature measurements shall comply with the requirements of § 92.105(c).

(5) Humidity measurements shall be accurate within 2 percent of the measured absolute humidity.

§ 92.109 Analyzer specifications.

(a) *General analyzer specifications*—(1) *Analyzer response time.* Analyzers for THC, CO_2, CO, and NO_X must respond to an instantaneous step change at the entrance to the analyzer with a response equal to 95 percent of that step change in 6.0 seconds or less on all ranges used. The step change shall be at least 60 percent of full-scale chart deflection. For NO_X analyzers using a water trap, the response time increase due to the water trap and associated plumbing need not be included in the analyzer response time.

(2) *Precision.* The precision of the analyzers for THC, CO_2, CO, and NO_X must be no greater than ±1 percent of full-scale concentration for each range used above 155 ppm (or ppmC), or ±2 percent for each range used below 155 ppm (or ppmC). The precision is defined as 2.5 times the standard deviation(s) of 10 repetitive responses to a given calibration or span gas.

(3) *Noise.* The analyzer peak-to-peak response to zero and calibration or span gases over any 10-second period shall not exceed 2 percent of full/scale chart deflection on all ranges used.

(4) *Zero drift.* For THC, CO_2, CO, and NO_X analyzers, the zero-response drift during a 1-hour period shall be less than 2 percent of full-scale chart deflection on the lowest range used. The zero-response is defined as the mean response including noise to a zero-gas during a 30-second time interval.

(5) *Span drift.* For THC, CO_2, CO, and NO_X analyzers, the span drift during a 1-hour period shall be less than 2 percent of full-scale chart deflection on the lowest range used. The analyzer span is defined as the difference between the span-response and the zero-response. The span-response is defined as the mean response including noise to a span gas during a 30-second time interval.

(b) *Carbon monoxide and carbon dioxide analyzer specifications.* (1) Carbon monoxide and carbon dioxide measurements are to be made with nondispersive infrared (NDIR) analyzers.

(2) The use of linearizing circuits is permitted.

(3) The minimum water rejection ratio (maximum CO_2 interference) as measured in § 92.120(a) shall be:

(i) For CO analyzers, 1000:1.

(ii) For CO_2 analyzers, 100:1.

(4) The minimum CO_2 rejection ratio (maximum CO_2 interference) as measured in § 92.120(b) for CO analyzers shall be 5000:1.

(5) *Zero suppression*. Various techniques of zero suppression may be used to increase readability, but only with prior approval by the Administrator.

(6) Option: if the range of CO concentrations encountered during the different test modes is too broad to allow accurate measurement using a single analyzer, then multiple CO analyzers may be used.

(c) *Hydrocarbon analyzer specifications*. (1) Hydrocarbon measurements are to be made with a heated flame ionization detector (HFID) analyzer. An overflow sampling system is recommended but not required. (An overflow system is one in which excess zero gas or span gas spills out of the probe when zero or span checks of the analyzer are made.

(i) *Option*. A non-heated flame ionization detector (FID) that measures hydrocarbon emissions on a dry basis is permitted for petroleum fuels other than diesel and biodiesel; Provided, that equivalency is demonstrated to the Administrator prior to testing. With the exception of temperatures, all specifications contained in Subpart B of this part apply to the optional system.

(ii) The analyzer shall be fitted with a constant temperature oven housing the detector and sample-handling components. It shall maintain temperature with 3.6 °F (2 °C) of the set point. The detector, oven, and sample-handling components within the oven shall be suitable for continuous operation at temperatures to 395 °F (200 °C).

(iii) Fuel and burner air shall conform to the specifications in § 92.112(e).

(iv) The percent of oxygen interference must be less than 3 percent, as specified in § 92.119(3).

(v) *Premixed burner air*. (A) For diesel and biodiesel fueled engines, premixing a small amount of air with the HFID fuel prior to combustion within the HFID burner is not recommended as a means of improving oxygen interference ($\%O_2I$). However, this procedure may be used if the engine manufacturer demonstrates on each basic combustion system (i.e., four-cycle direct injection, two-cycle direct injection, four-cycle indirect injection, etc.) that an HFID using this procedure produces comparable results to an HFID not using this procedure. These data must be submitted to the Administrator for his/her approval prior to testing.

(B) For engines operating on fuels other than diesel or biodiesel, premixing burner air with the HFID fuel is not allowed.

(2) *Methane analyzer*. The analytical system for methane consists of a gas chromatograph (GC) combined with a flame ionization detector (FID).

(3) *Alcohols and Aldehydes*. The sampling and analysis procedures for alcohols and aldehydes, where applicable, shall be approved by the Administrator prior to the start of testing. Procedures are allowed if they are consistent with the general requirements of 40 CFR part 1065, subpart I, for sampling and analysis of alcohols and aldehydes, and with good engineering practice.

(4) Other methods of measuring organics that are shown to yield equivalent results can be used upon approval of the Administrator prior to the start of testing.

(d) *Oxides of nitrogen analyzer specifications*. (1) Oxides of nitrogen are to be measured with a chemiluminescence (CL) analyzer.

(i) The NO_X sample must be heated per § 92.114 up to the NO_2 to NO converter.

(ii) For high vacuum CL analyzers with heated capillary modules, supplying a heated sample to the capillary module is sufficient.

(iii) The NO_2 to NO converter efficiency shall be at least 90 percent.

(iv) The CO_2 quench interference must be less than 3.0 percent as measured in § 92.121(a).

[63 FR 18998, Apr. 16, 1998, as amended at 70 FR 40454, July 13, 2005]

§ 92.110 Weighing chamber and microbalance.

(a) *Ambient conditions*—(1) *Temperature*. The temperature of the chamber (or room) in which the particulate filters are conditioned and weighed shall be maintained at a measured temperature between 19 °C and 25 °C during all filter conditioning and weighing.

(2) *Humidity*. The relative humidity of the chamber (or room) in which the particulate filters are conditioned and weighed shall be 45±8 percent during all filter conditioning and weighing. The dew point shall be 6.4 to 12.4 °C.

(b) *Weighing balance specifications*. The microbalance used to determine the weights of all filters shall have a precision (standard deviation) of no more than 20 micrograms and readability down to 10 micrograms or lower.

(c) *Reference filters*. The chamber (or room) environment shall be free of any ambient contaminants (such as dust) that would settle on the particulate filters during their stabilization. It is required that at least two unused reference filters remain in the weighing room at all times in covered (to reduce dust contamination) but unsealed (to permit humidity exchange) petri dishes.

(1) These reference filters shall be placed in the same general area as the sample filters. These reference filters shall be weighed within 4 hours of, but preferably at the same time as, the sample filter weighings.

(2) If the average weight of the reference filters changes between sample filter weighings by ±5.0 percent (±7.5 if the filters are weighed in pairs) or more of the target nominal filter loading (the recommended nominal loading is 0.5 milligrams per 1075 square millimeters of stain area), then all sample filters in the process of stabilization shall be discarded and the emissions tests repeated.

(3) If the average weight of the reference filters decreases between sample filter weighings by more than 1.0 percent but less than 5.0 percent of the nominal filter loading then the manufacturer or remanufacturer has the option of either repeating the emissions test or adding the average amount of weight loss to the net weight of the sample.

(4) If the average weight of the reference filters increases between sample filter weighing by more than 1.0 percent but less than 5.0 percent of the nominal filter loading, then the manufacturer or remanufacturer has the option of either repeating the emissions test or accepting the measured sample filter weight values.

(5) If the average weight of the reference filters changes between sample filter weighings by not more than ±1.0 percent, then the measured sample filter weights shall be used.

(6) The reference filters shall be changed at least once a month, but never between clean and used weighings of a given sample filter. More than one set of reference filters may be used. The reference filters shall be the same size and material as the sample filters.

§ 92.111 Smoke measurement system.

(a) *Schematic drawing*. Figure B111–1 of this section is a schematic drawing of the optical system of the light extinction meter, as follows:

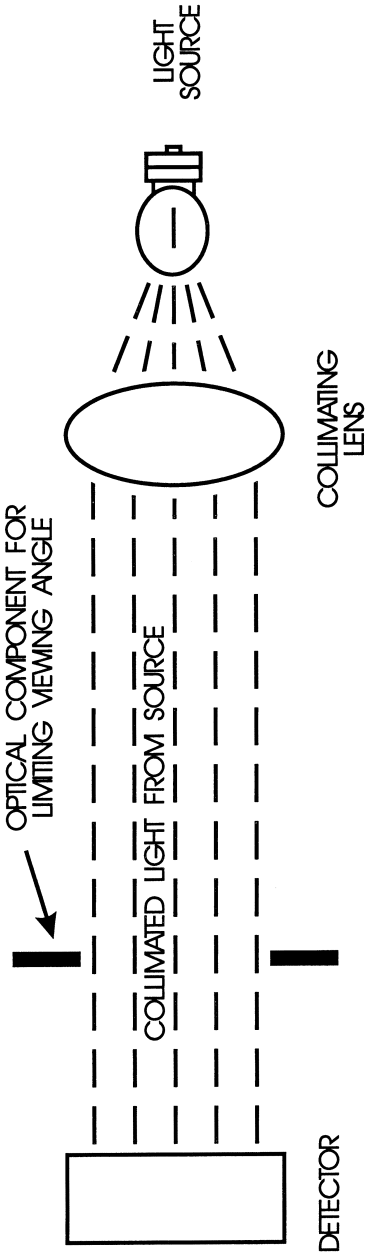

Figure B111-1 SMOKEMETER OPTICAL SYSTEM (SCHEMATIC)

(b) *Equipment*. The following equipment shall be used in the system.

(1) *Adapter*. The smokemeter optical unit may be mounted on a fixed or movable frame. The normal unrestricted shape of the exhaust plume shall not be modified by the adaptor, the meter, or any ventilation system

used to remove the exhaust from the test site. Distortion due to the gaseous or particulate sample probes, or the exhaust duct is allowed subject to the provisions of § 92.114.

(2) *Wind shielding*. Tests shall not be conducted under excessively windy conditions. Winds are excessive if they disturb the size, shape, or location of the exhaust plume in the region where exhaust samples are drawn or where the smoke plume is measured. Tests may be conducted if wind shielding is placed adjacent to the exhaust plume to prevent bending, dispersion, or any other distortion of the exhaust plume as it passes through the optical unit.

(3) *Smokemeter, (light extinction meter)*. A continuously recording, full-flow light obscuration meter shall be used.

(i) It is positioned as specified in paragraph (c) of this section, so that a built-in light beam traverses the exhaust smoke plume which issues from the duct. The light beam shall be at right angles to the axis of the plume, and in those cases were the exhaust is not circular at its discharge, the path of the light beam through the plume shall be along the longest axis of the exhaust stack which is not a diagonal of a rectangular exhaust stack.

(ii) The light source shall be an incandescent lamp with a color temperature range of 2800K to 3250K, or a light source with a spectral peak between 550 and 570 nanometers.

(iii) The light output is collimated to a beam with a nominal diameter of 1.125 inches and an angle of divergence within a 6 degree included angle.

(iv) The light detector shall be a photocell or photodiode. If the light source is an incandescent lamp, the detector shall have a spectral response similar to the photopic curve of the human eye (a maximum response in the range of 550 to 570 nanometers, to less than four percent of that maximum response below 430 nanometers and above 680 nanometers).

(v) A collimating tube with apertures equal to the beam diameter is attached to the detector to restrict the viewing angle of the detector to within a 16 degree included angle.

(vi) An amplified signal corresponding to the amount of light blocked is recorded continuously on a remote recorder.

(vii) An air curtain across the light source and detector window assemblies may be used to minimize deposition of smoke particles on those surfaces provided that it does not measurably affect the opacity of the plume.

(viii) The smokemeter consists of two units; an optical unit and a remote control unit.

(ix) Light extinction meters employing substantially identical measurement principles and producing substantially equivalent results, but which employ other electronic and optical techniques may be used only after having been approved in advance by the Administrator.

(4) *Recorder*. A continuous recorder, with variable chart speed over a minimal range of 1 to 20 cm per minute (or equivalent) and an automatic marker indicating 1-second intervals, continuously records the exhaust gas opacity and throttle position.

(i) The recorder is equipped to indicate each of the throttle notch (test mode) positions.

(ii) The recorder scale for opacity is linear and calibrated to read from 0 to 100 percent opacity full scale.

(iii) The opacity trace has a resolution within one percent opacity.

(iv) The throttle position trace clearly indicates each throttle position.

(5) The recorder used with the smokemeter shall be capable of full-scale deflection in 0.5 second or less. The smokemeter-recorder combination may be damped so that signals with a frequency higher than 10 cycles per second are attenuated. A separate low-pass electronic filter with the following performance characteristics may be installed between the smokemeter and the recorder to achieve the high-frequency attenuation:

(i) Three decibel point: 10 cycles per second.

(ii) Insertion loss: 0 ±0.5 decibel.

(iii) Selectivity: 12 decibels down at 40 cycles per second minimum.

(iv) Attenuation: 27 decibels down at 40 cycles per second minimum.

(6) Automatic data collection equipment may be used, provided it is capable of collecting data equivalent to or

better than the data required by paragraphs (b)(4) and (5) of this section.

(c)(1) *Assembling equipment for locomotive testing*. The optical unit of the smokemeter shall be mounted radially to the exhaust duct so that the measurement will be made at right angles to the axis of the exhaust plume. The distance from the optical centerline to the exhaust outlet shall be minimized; in all cases it shall be less than 10 feet. The maximum allowable distance of unducted space upstream of the optical centerline is 18 inches. The full flow of the exhaust stream shall be centered between the source and detector apertures (or windows and lenses) and on the axis of the light beam.

(2) *Assembling equipment for engine testing*. The optical unit of the smokemeter shall be mounted radially to the exhaust duct so that the measurement will be made at right angles to the axis of the exhaust plume. The distance from the optical centerline to the exhaust outlet shall be less than 25 feet. The maximum allowable distance of unducted space upstream of the optical centerline is 18 inches. In-line smokemeters are allowed. The full flow of the exhaust stream shall be centered between the source and detector apertures (or windows and lenses) and on the axis of the light beam.

(d) *Power supply*. Power shall be supplied to the control unit of the smokemeter in time to allow at least 15 minutes for stabilization prior to testing.

§ 92.112 Analytical gases.

(a) Gases for the CO and CO_2 analyzers shall be single blends of CO and CO_2, respectively, using zero grade nitrogen as the diluent.

(b) Gases for the hydrocarbon analyzer shall be single blends of propane using zero grade air as the diluent.

(c) Gases for the methane analyzer shall be single blends of methane using air as the diluent.

(d) Gases for the NO_X analyzer shall be single blends of NO named as NO_X with a maximum NO_2 concentration of 5 percent of the nominal value using zero grade nitrogen as the diluent.

(e) Fuel for the HFID (or FID, as applicable) and the methane analyzer shall be a blend of 40±2 percent hydrogen with the balance being helium. The mixture shall contain less than 1 ppm equivalent carbon response; 98 to 100 percent hydrogen fuel may be used with advance approval of the Administrator.

(f) *Hydrocarbon analyzer burner air*. The concentration of oxygen must be within 1 mole percent of the oxygen concentration of the burner air used in the latest oxygen interference check ($\%O_2I$). If the difference in oxygen concentration is greater than 1 mole percent, then the oxygen interference must be checked and the analyzer adjusted if necessary, to meet the $\%O_2I$ requirements. The burner air must contain less than 2 ppmC hydrocarbon.

(g) The allowable zero gas (air or nitrogen) impurity concentrations shall not exceed 1 ppm equivalent carbon response, 1 ppm carbon monoxide, 0.04 percent (400 ppm) carbon dioxide and 0.1 ppm nitric oxide.

(h)(1) ''Zero-grade air'' includes artificial ''air'' consisting of a blend of nitrogen and oxygen with oxygen concentrations between 18 and 21 mole percent.

(2) Calibration gases shall be accurate to within ±1 percent of NIST gas standards, or other gas standards which have been approved by the Administrator.

(3) Span gases shall be accurate to within ±2 percent of NIST gas standards, or other gas standards which have been approved by the Administrator.

(i) Oxygen interference check gases shall contain propane at a concentration greater than 50 percent of range. The concentration value shall be determined to calibration gas tolerances by chromatographic analysis of total hydrocarbons plus impurities or by dynamic blending. Nitrogen shall be the predominant diluent with the balance being oxygen. Oxygen concentration in the diluent shall be between 20 and 22 percent.

(j) The use of precision blending devices (gas dividers) to obtain the required calibration gas concentrations is acceptable, provided that the blended gases are accurate to within ±1.5 percent of NIST gas standards, or other gas standards which have been approved by the Administrator. This accuracy implies that primary gases used

for blending must be ''named'' to an accuracy of at least ±1 percent, traceable to NIST or other approved gas standards.

§ 92.113 Fuel specifications.

(a) *Diesel test fuel.* (1) The diesel fuels for testing locomotives or locomotive engines designed to operate on diesel fuel shall be clean and bright, with pour and cloud points adequate for operability. The diesel fuel may contain nonmetallic additives as follows: cetane improver, metal deactivator, antioxidant, dehazer, antirust, pour depressant, dye, dispersant, and biocide. The diesel fuel shall also meet the specifications (as determined using methods incorporated by reference at § 92.5) in Table B113–1 of this section, or substantially equivalent specifications approved by the Administrator, as follows:

TABLE B113–1

Item	ASTM	Type 2–D
Cetane Number	D613	40–48
Cetane Index	D976	40–48
Distillation range:		
IBP,		
°F	D86	340–400
(°C)		(171.1–204.4)
10 pct. point,		
°F	D86	400–460
(°C)		(204.4–237.8)
50 pct. point,		
°F	D86	470–540
(°C)		(243.3–282.2)
90 pct. point,		
°F	D86	560–630
(°C)		(293.3–332.2)
EP,		
°F	D86	610–690
(°C)		(321.1–365.6)
Gravity, °API	D287	32–37
Total sulfur, pct	D2622	0.2–0.4
Hydrocarbon composition, pct:		
Aromatics,	D5186	[1] 27
Paraffins, Naphthenes, Olefins.	D1319	([2])
Flashpoint, min.,		
°F	D93	130
°C		(54.4)
Viscosity, centistokes	D445	2.0–3.2

[1] Minimum. [2] Remainder.

(2) Other diesel fuels may be used for testing provided:

(i) They are commercially available; and

(ii) Information, acceptable to the Administrator, is provided to show that only the designated fuel would be used in service; and

(iii) Use of a fuel listed under paragraph (a)(1) of this section would have a detrimental effect on emissions or durability; and

(iv) Written approval from the Administrator of the fuel specifications is provided prior to the start of testing.

(3) The specification of the fuel to be used under paragraphs (a)(1), and (a)(2) of this section shall be reported in accordance with § 92.133.

(b) *Natural gas test fuel (compressed natural gas, liquefied natural gas).* (1) Natural gas-fuel meeting the specifications (as determined using methods incorporated by reference at § 92.5) in Table B113–2 of this section, or substantially similar specifications approved by the Administrator, shall be used in exhaust emissions testing of locomotives or locomotive engines designed to operate on natural gas-fuel, as follows:

TABLE B113–2

Item	Mole pct.	ASTM test method No.	Value
Methane	Min.	D1945	89.0
Ethane	Max.	D1945	4.5
C_3 and higher	Max.	D1945	2.3
C_6 and higher	Max.	D1945	0.2
Oxygen	Max.	D1945	0.6
Inert gases: Sum of CO_2 and N_2—Odorant [1].	Max.	D1945	4.0

[1] The natural gas at ambient conditions must have a distinctive odor potent enough for its presence to be detected down to a concentration in air of not over 1/5 (one-fifth) of the lower limit of flammability.

(2) Other natural gas-fuels may be used for testing provided:

(i) They are commercially available; and

(ii) Information, acceptable to the Administrator, is provided to show that only the designated fuel would be used in customer service; and

(iii) Written approval from the Administrator of the fuel specifications is provided prior to the start of testing.

(3) The specification of the fuel to be used under paragraph (b)(1) or (b)(2) of this section shall be reported in accordance with § 92.133.

(c) *Other fuel types.* (1) For locomotives or locomotive engines which are designed to be capable of using a type of fuel (or mixed fuel) other than diesel fuel, or natural gas fuel (e.g., methanol), and which are expected to use that type of fuel (or mixed fuel) in

service, a commercially available fuel of that type shall be used for exhaust emission testing. The Administrator shall determine the specifications of the fuel to be used for testing, based on the engine design, the specifications of commercially available fuels, and the recommendation of the manufacturer.

(2) The specification of the fuel to be used under paragraph (c)(1) of this section shall be reported in accordance with § 92.133.

§ 92.114 Exhaust gas and particulate sampling and analytical system.

(a) *General*. (1) During emission testing, the engine exhaust is routed through an exhaust duct connected to, or otherwise adjacent to the outlet of the locomotive exhaust system. Emission samples are collected as specified in paragraphs (b) and (c) of this section. Exhaust duct requirements are specified in paragraph (d) of this section.

(2) The systems described in this section are appropriate for use with locomotives or engines employing a single exhaust.

(i) For testing where the locomotive or engine has multiple exhausts all exhaust streams shall be combined into a single stream prior to sampling, except as allowed by paragraph (a)(2)(ii) of this section.

(ii) For locomotive testing where the locomotive has multiple exhaust stacks, proportional samples may be collected from each exhaust outlet instead of ducting the exhaust stacks together, provided that the CO_2 concentrations in each exhaust stream are shown (either prior to testing or during testing) to be within 5 percent of each other at notch 8.

(3) All vents, including analyzer vents, bypass flow, and pressure relief vents of regulators, should be vented in such a manner to avoid endangering personnel in the immediate area.

(4) Additional components, not specified here, such as instruments, valves, solenoids, pumps, switches, and so forth, may be employed to provide additional information and coordinate the functions of the component systems, provided that their use is consistent with good engineering practice. Any variation from the specifications in this subpart including performance specifications and emission detection methods may be used only with prior approval by the Administrator.

(b) *Raw exhaust sampling for gaseous emissions*. (1)(i) An example of the type of sampling and analytical system which is to be used for gaseous emissions testing under this subpart is shown in Figure B114–1 of this section. All components or parts of components that are wetted by the sample or corrosive calibration gases shall be either chemically cleaned stainless steel or other inert material, for example, polytetrafluoroethylene resin. The use of ''gauge savers'' or ''protectors'' with nonreactive diaphragms to reduce dead volumes is permitted. Additional components such as instruments, valves, solenoids, pumps, switches, etc. may be employed to provide additional information and coordinate the functions of the component systems.

(ii) *System components list*. The following is a list of components shown in Figure B114–1 of this section by numeric identifier.

(A) *Filters*. Glass fiber filter paper is permitted for the fine particulate filters (F1, F2, and F3). Optional filter F4 is a coarse filter for large particulates. Filters F3 and F4 are heated filters

(B) *Flowmeters*. Flowmeters FL1 and FL2 indicate sample flow rates through the CO and CO_2 analyzers. Flowmeters FL3, FL4, FL5, and FL6 indicate bypass flow rates.

(C) *Gauges*. Downstream gauges are required for any system used for testing under this subpart. Upstream gauges may be required under this subpart. Upstream gauges G1 and G2 measure the input to the CO and CO_2 analyzers. Downstream gauges G3 and G4 measure the exit pressure of the CO and CO_2 analyzers. If the normal operating range of the downstream gauges is less than 3 inches of water, then the downstream gauges must be capable of reading both pressure and vacuum. Gauges G3 and G4 are not necessary if the analyzers are vented directly to atmospheric pressure.

(D) *Pressure gauges*. P1 is a bypass pressure gauge; P2, P3, P4, and P5 are for sample or span pressure at inlet to flow control valves.

(E) *Water traps*. Water traps WT1 and WT2 to remove water from the sample. A water trap performing the function of WT1 is required for any system used for testing under this subpart. Chemical dryers are not an acceptable method of removing the water. Water removal by condensation is acceptable. If water is removed by condensation, the sample gas temperature or sample dew point must be monitored either within the water trap or downstream; it may not exceed 45 °F (7 °C). Means other than condensation may be used only with prior approval from the Administrator.

(F) *Regulators*. R1, R3, R4, and R6 are line pressure regulators to control span pressure at inlet to flow control valves; R2 and R5 are back pressure regulators to control sample pressure at inlet to flow control valves.

(G) *Valves*. V1, V7, V8, and V14 are selector valves to select zero or calibration gases; V2 are optional heated selector valves to purge the sample probe, perform leak checks, or to perform hang-up checks; V3 and V5 are selector valves to select sample or span gases; V4, V6, and V15 are flow control valves; V9 and V13—heated selector valve to select sample or span gases; V10 and V12—heated flow control valves; V11—Selector valve to select NO_X or bypass mode in the chemiluminescence analyzer; V16—heated selector valve to perform leak checks.

(H) *Pump*. Sample transfer pump to transport sample to analyzers.

(I) *Temperature sensor*. A temperature sensor (T1) to measure the NO_2 to NO converter temperature is required for any system used for testing under this subpart.

(J) *Dryer*. Dryers D1 and D2 to remove the water from the bypass flows to prevent condensation in flowmeters FL3, FL4, and FL6.

(2) The following requirements must be incorporated in each gaseous sampling system used for testing under this subpart:

(i) The exhaust is analyzed for gaseous emissions using analyzers meeting the specifications of § 92.109, and all analyzers must obtain the sample to be analyzed from the same sample probe, and internally split to the different analyzers.

(ii) Sample transfer lines must be heated as specified in paragraph (b)(4) of this section.

(iii) Carbon monoxide and carbon dioxide measurements must be made on a dry basis. Specific requirements for the means of drying the sample can be found in paragraph (b)(1)(ii)(E) of this section.

(iv) All NDIR analyzers must have a pressure gauge immediately downstream of the analyzer. The gauge tap must be within 2 inches of the analyzer exit port. Gauge specifications can be found in paragraph (b)(1)(ii)(C) of this section.

(v) All bypass and analyzer flows exiting the analysis system must be measured. Capillary flows such as in HFID and CL analyzers are excluded. For each NDIR analyzer with a flow meter located upstream of the analyzer, an upstream pressure gauge must be used. The gauge tap must be within 2 inches of the analyzer entrance port.

(vi) Calibration or span gases for the NO_X measurement system must pass through the NO_2 to NO converter.

(vii) The temperature of the NO_2 to NO converter must be displayed continuously.

(3) *Gaseous sample probe*. (i) The gaseous emissions sample probe shall be a straight, closed end, stainless steel, multi-hole probe. The inside diameter shall not be greater than the inside diameter of the sample line by more than 0.01 inches (0.03 cm). The wall thickness of the probe shall not be greater than 0.04 inches (0.10 cm). The fitting that attaches the probe to the exhaust duct shall be as small as practical in order to minimize heat loss from the probe.

(ii) The gaseous emissions sample probe shall have a minimum of three holes in each 3 inch segment of length of the probe. The spacing of the radial planes for each hole in the probe must be such that they cover approximately equal cross-sectional areas of the exhaust duct. The angular spacing of the holes must be approximately equal. The angular spacing of any two holes in one plane may not be 180 °±20° (see section view C-C of Figure B114–2 of

this section). The holes should be sized such that each has approximately the same flow. If only three holes are used in each 3 inch segment of probe length, they may not all be in the same radial plane.

(iii) The sample probe shall be so located in the center of the exhaust duct to minimize stratification, with respect to both concentration and velocity, present in the exhaust stream. The probe shall be located between two feet and five feet downstream of the locomotive exhaust outlet (or nearest practical equivalent during engine testing), and at least 1 foot upstream of the outlet of the exhaust duct to the atmosphere.

(iv) If the exhaust duct is circular in cross section, the sample probe should extend approximately radially across the exhaust duct, and approximately through the center of the duct. The sample probe must extend across at least 80 percent of the diameter of the duct.

(v) If the exhaust duct is not circular in cross section, the sample probe should extend across the exhaust duct approximately parallel to the longest sides of the duct, or along the longest axis of the duct which is not a diagonal, and through the approximate center of the duct. The sample probe must extend across at least 80 percent of the longest axis of the duct which is not a diagonal, and be approximately parallel to the longest sides of the duct.

(vi) Other sample probe designs and/or locations may be used only if demonstrated (to the Administrator's satisfaction) to provides a more representative sample.

(4) *Sample transfer line(s)*. (i) The maximum inside diameter of the gaseous emissions sample line shall not exceed 0.52 inches (1.32 cm).

(ii) If valve V2 is used, the sample probe must connect directly to valve V2. The location of optional valve V2 may not be greater than 4 feet (1.22 m) from the exhaust duct.

(iii) The sample transport system from the engine exhaust duct to the HC analyzer and the NO_X analyzer must be heated as is indicated in Figure B114–1 of this section.

(A) For diesel fueled and biodiesel fueled locomotives and engines, the wall temperature of the HC sample line must be maintained at 375 ±20 °F (191 ±11 °C). An exception is made for the first 4 feet (122 cm) of sample line from the exhaust duct. The upper temperature tolerance for this 4 foot section is waived and only the minimum temperature specification applies.

(B) For locomotives and engines using fuels other than diesel or biodiesel, the heated components in the HC sample path shall be maintained at a temperature approved by the Administrator, not exceeding 446 °F (230 °C).

(C) For all fuels, wall temperature of the NO_X sample line must be maintained between 140 °F (60 °C) and 446 °F (230 °C). An exception is made for the first 4 feet (122 cm) of sample line from the exhaust duct. The upper temperature tolerance for this 4 foot section is waived and only the minimum temperature specification applies.

(D) For each component (pump, sample line section, filters, etc.) in the heated portion of the sampling system that has a separate source of power or heating element, use engineering judgment to locate the coolest portion of that component and monitor the temperature at that location. If several components are within an oven, then only the surface temperature of the component with the largest thermal mass and the oven temperature need be measured.

(c) *Particulate emissions*. (1)(i) Schematic drawing. An example of a sampling system which may be used for particulate emissions testing under this subpart is shown in Figure B114–3 of this section. All components or parts of components that are wetted by the samples gases upstream of the filter shall be either chemically cleaned stainless steel or other inert material, for example, polytetrafluoroethylene resin. The use of ''gauge savers'' or ''protectors'' with nonreactive diaphragms to reduce dead volumes is permitted. Additional components such as instruments, valves, solenoids, pumps, switches, etc. may be employed to provide additional information and coordinate the functions of the component systems.

(ii) The following requirements must be incorporated in each system used for testing under this subpart:

(A) All particulate filters must obtain the sample from the same sample probe located within the exhaust gas extension with internal split to the different filters.

(B) The wall temperature of the sample transport system from the probe to the dilution tunnel (excluding the first 4 feet of the particulate transfer tube) must be maintained at 375 °F to 395 °F (191 °C to 202 °C).

(2) *Particulate raw sample probe.* (i) The sample probe for the raw exhaust shall be a straight, closed end, stainless steel, multi-hole probe of approximately 1.25 inch (3.2 cm) diameter. The inside diameter shall not be greater than the inside diameter of the sample line by more than 0.1 inches (0.3 cm). The wall thickness of the probe shall not be greater than 0.06 inches (0.15 cm). The fitting that attaches the probe to the exhaust duct shall be as small as practical in order to minimize heat loss from the probe.

(ii) All sample collection holes in the probe shall be located so as to face away from the direction of flow of the exhaust stream or at most be tangential to the flow of the exhaust stream past the probe (see Figure B114–4 of this section). Five holes shall be located in each radial plane along the length of the probe in which sample holes are placed. The spacing of the radial planes for each set of holes in the probe must be such that they cover approximately equal cross-sectional areas of the exhaust duct. For rectangular ducts, this means that the sample hole-planes must be equidistant from each other. For circular ducts, this means that the distance between the sample hole-planes must be decreased with increasing distance from the center of the duct (see Figure B114–4 of this section).

(NOTE: Particulate concentrations are expected to vary to some extent as a function of the distance to the duct wall; thus each set of sample holes collects a sample that is representative of a cross-sectional disk at that approximate distance from the wall.)

The spacing between sets of sample holes along the length of the probe shall be no more than 4 inches (10 cm). The holes should be sized such that each has approximately the same flow.

(iii)(A) The particulate sample probe shall be located in the exhaust duct on an axis which is directly downstream of, and parallel to the axis of the gaseous sample probe. The distance between the probes shall be between 3 inches (7.6 cm) and 6 inches (15.2 cm). Greater spacing is allowed for engine testing, where spacing of 3 inches (7.6 cm) to 6 inches (15.2 cm) is not practical.

(B) If the exhaust duct is circular in cross section, the sample probe should extend approximately radially across the exhaust duct, and approximately through the center of the duct. The sample probe must extend across at least 80 percent of the diameter of the duct.

(C) If the exhaust duct is not circular in cross section, the sample probe should extend across the exhaust duct approximately parallel to the longest sides of the duct, or along the longest axis of the duct which is not a diagonal, and through the approximate center of the duct. The sample probe must extend across at least 80 percent of the longest axis of the duct which is not a diagonal, and be approximately parallel to the longest sides of the duct.

(3) *Particulate sample transfer line.* (i) The maximum inside diameter of the particulate emissions sample line shall be approximately 2.5 inches (6.4 cm).

(ii) The sample transfer line shall be heated to maintain a wall temperature above 375 °F.

(4) *Dilution tunnel.* The flow capacity of the blower moving the mixture of sample and air through the tunnel must be sufficient to maintain the diluted sample stream at a temperature of 125 °F (51.7 °C) or less, at the sampling zone in the dilution tunnel and at the sample filter. A single measurement of diluted exhaust temperature is required. The temperature shall also be maintained as required to prevent condensation at any point in the dilution tunnel. A small negative pressure is to be maintained in the dilution tunnel by throttling at the source of the dilution air, and adjusted as necessary, sufficient to draw sample through the probe and sample transfer line. Direct sampling of the particulate material may take place (Figure B114–3 of this section) at this point.

(i)(A) The dilution tunnel shall be:

(*1*) Small enough in diameter to cause turbulent flow (Reynolds Number greater than 4000) and of sufficient length to cause complete mixing of the exhaust and dilution air;

(*2*) 4 inches (10 cm) minimum inside diameter;

(*3*) Constructed of electrically conductive material which does not react with the exhaust components; and

(*4*) Electrically grounded.

(B) The temperature of the diluted exhaust stream inside of the dilution tunnel shall be sufficient to prevent water condensation.

(C) The engine exhaust shall be directed downstream at the point where it is introduced into the dilution tunnel.

(ii) Dilution air:

(A) Shall be at a temperature of 68 °F (20 °C) or greater.

(B) May be filtered at the dilution air inlet.

(C) May be sampled to determine background particulate levels, which can then be subtracted from the values measured in the exhaust stream.

(D) Shall be sampled to determine the background concentration of CO_2.

(iii) Dilute sample probe and collection system.

(A) The particulate sample probe in the dilution tunnel shall be:

(*1*) Installed facing upstream at a point where the dilution air and exhaust are well mixed (i.e., on the tunnel centerline, approximately 10 tunnel diameters downstream of the point where the exhaust enters the dilution tunnel).

(*2*) Sufficiently distant (radially) from other sampling probes so as to be free from the influence of wakes or eddies produced by the other probes.

(*3*) 0.5 in. (1.3 cm) minimum inside diameter.

(*4*) The distance from the sampling tip to the filter holder shall not be more than 40 inches (102 cm).

(*5*) Designed to minimize the deposition of particulate during transfer (i.e., bends should be as gradual as possible, protrusions (due to sensors, etc.) should be smooth and not sudden, etc.).

(B) The gas meters or flow instrumentation shall be located sufficiently distant from the tunnel so that the inlet gas temperature remains constant (±5 °F (±2.8 °C)). Alternately, the temperature of the sample may be monitored at the gas meter, and the measured volume corrected to standard conditions.

(C) *Particulate sampling filters.* (*1*) Fluorocarbon-coated glass fiber filters or fluorocarbon-based (membrane) filters are required.

(*2*) Particulate filters must have a diameter to maintain the average face velocity of the sample across the filter between 35 and 80 cm/s.

(*3*) The dilute exhaust will be simultaneously sampled by a pair of filters (one primary and one back-up filter) during each phase of the test. The back-up filter shall be located no more than 4 inches (10 cm) downstream of the primary filter. The primary and back-up filters shall not be in contact with each other.

(*4*) The recommended target loading on a primary 70-mm filter (60 mm diameter stain area) is 1.3 milligrams. Equivalent loadings (0.5 mg/1075 mm^2 stain area) shall be used as target loadings when other filter sizes are used.

(D) *Diluted CO_2 sample collection system.* (*1*) The concentrations of CO_2 in the dilution air and diluted exhaust are determined by pumping a sample into a sample bag (made of a nonreactive material) or directly to the analyzer, as shown in Figure B114–3 of this section.

(*2*) The sample probe for the diluted exhaust shall be installed facing upstream at a point where the dilution air and exhaust are well mixed (i.e., on the tunnel centerline, approximately 10 tunnel diameters downstream of the point where the exhaust enters the dilution tunnel). It shall also be sufficiently distant (radially) from other sampling probes so as to be free from the influence of any wakes or eddies produced by the other probes.

(iv) Other sample flow handling and/or measurement systems may be used if shown to yield equivalent results and if approved in advance by the Administrator. (See Appendix IV of this part for guidance.)

(d) *Exhaust system.* The exhaust system shall meet the following requirements:

(1) For locomotive testing, the engine exhaust shall be routed through an exhaust duct with dimensions equal to or slightly larger than the dimensions of the locomotive exhaust outlet. The exhaust duct shall be designed so as to not significantly affect exhaust backpressure.

(2) For engine testing, either a locomotive-type or a facility-type exhaust system (or a combination system) may be used. The exhaust backpressure for engine testing shall be set between 90 and 100 percent of the maximum backpressure that will result with the exhaust systems of the locomotives in which the engine will be used. Backpressure less than 90 percent of the maximum value is also allowed, provided the backpressure is within 0.07 psi of the maximum value. The facility-type exhaust system shall meet the following requirements:

(i) It must be composed of smooth ducting made of typical in-use steel or stainless steel.

(ii) If an aftertreatment system is employed, the distance from the exhaust manifold flange(s), or turbocharger outlet to any exhaust aftertreatment device shall be the same as in the locomotive configuration unless the manufacturer is able to demonstrate equivalent performance at another location.

(iii) If the exhaust system ducting from the exit of the engine exhaust manifold or turbocharger outlet to smoke meter exceeds 12 feet (3.7 m) in length, then all ducting shall be insulated consistent with good engineering practice.

(iv) For engines designed for more than one exhaust outlet to the atmosphere, a specially fabricated collection duct may be used. The collection duct should be located downstream of the in-locomotive exits to the atmosphere. Any potential increase in backpressure due to the use of a single exhaust instead of multiple exhausts may be compensated for by using larger than standard exhaust system components in the construction of the collection duct.

(e) *Dilute exhaust sampling for gaseous and particulate emissions.* (1) Dilution of the exhaust prior to sampling is allowed for gaseous emissions. The equipment and methods used for dilution, sampling and analysis shall comply with the requirements of 40 CFR part 1065, with the following exceptions and additional requirements:

(i) Proportional sampling and heat exchangers are not required;

(ii) Larger minimum dimensions for the dilution tunnel(s) shall be specified by the Administrator;

(iii) Other modifications may be made with written approval from the Administrator.

(2) Dilution of only a portion of the exhaust is allowed, provided that:

(i) The fraction of the total exhaust that is diluted is determined for systems that determine mass emission rates (g/hr) from the total volume of the diluted sample; or

(ii) The ratio of raw sample volume to diluted sample volume is determined for systems that determine mass emission rates (g/hr) from measured fuel flow rates.

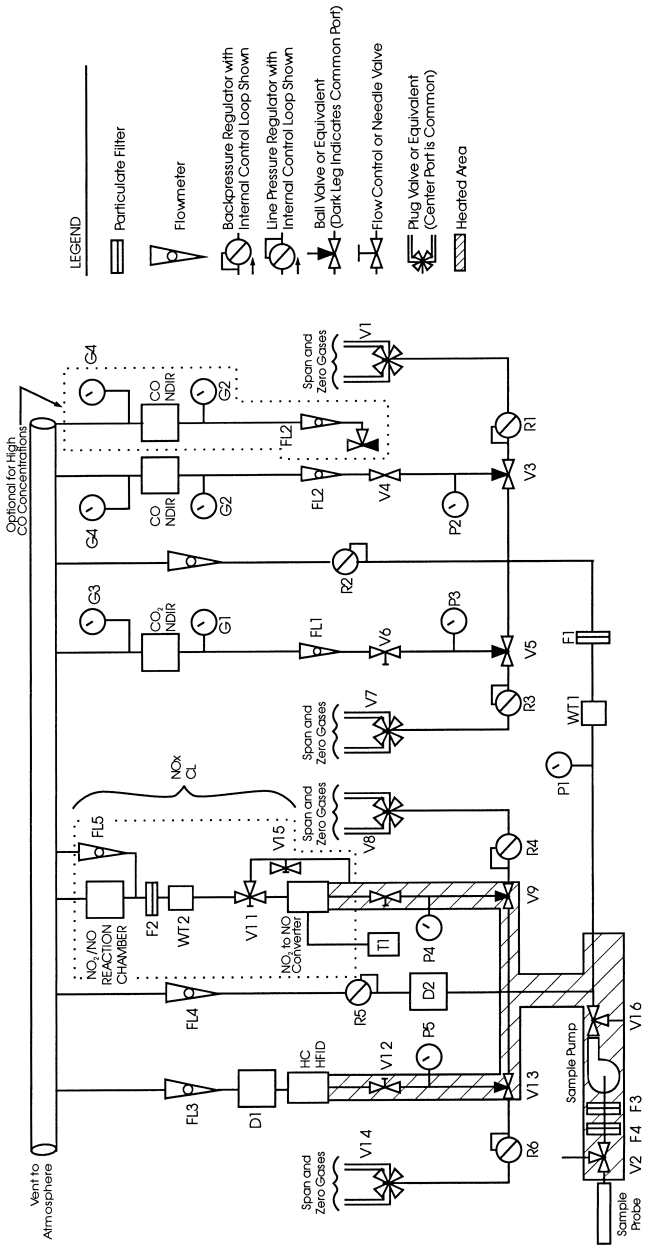

Figure B114-1. -- Exhaust Gas Sampling and Analytical Train

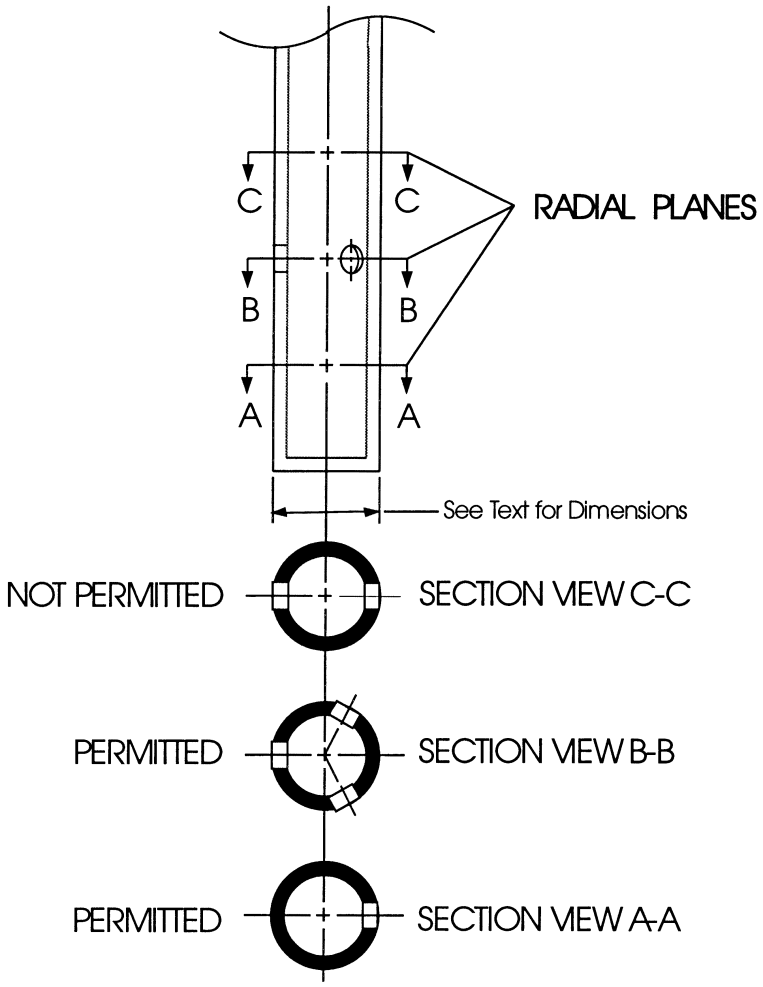

Figure B114-2 SAMPLE PROBE AND TYPICAL HOLE SPACING

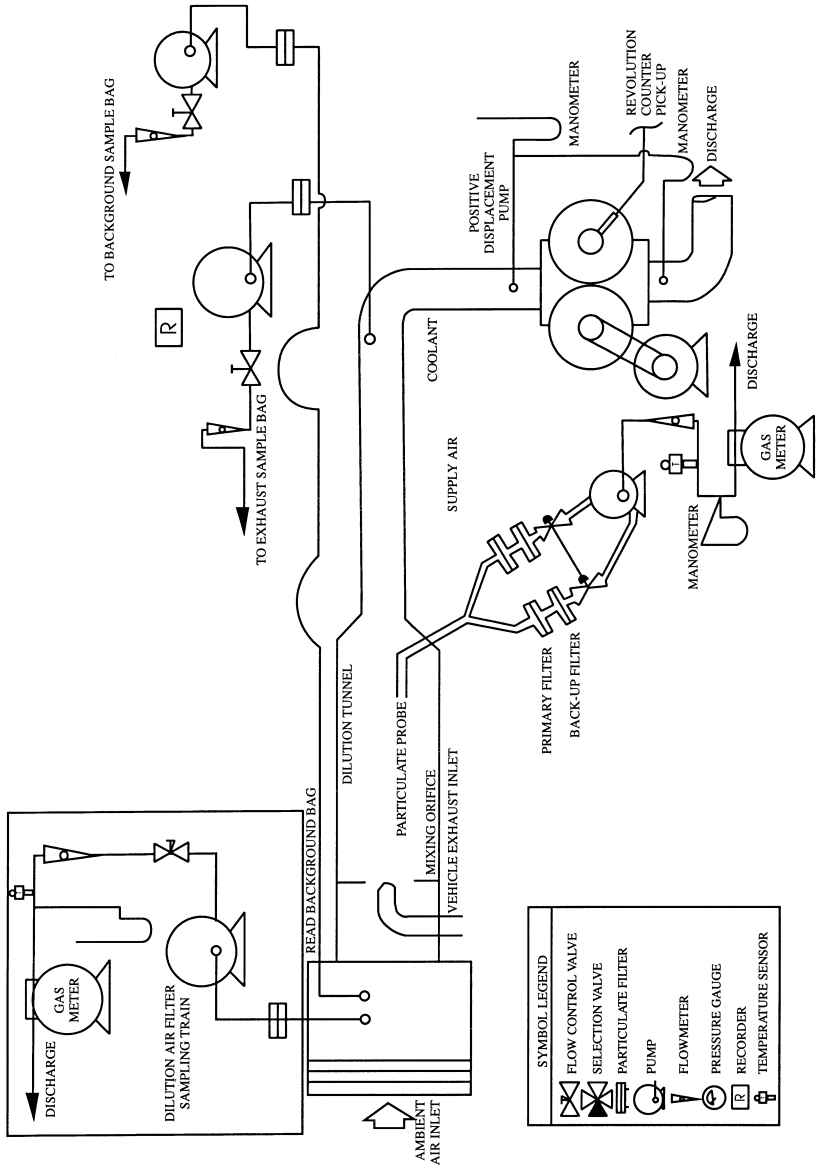

Figure B114-3 PARTICULATE EMISSIONS SAMPLING SYSTEM

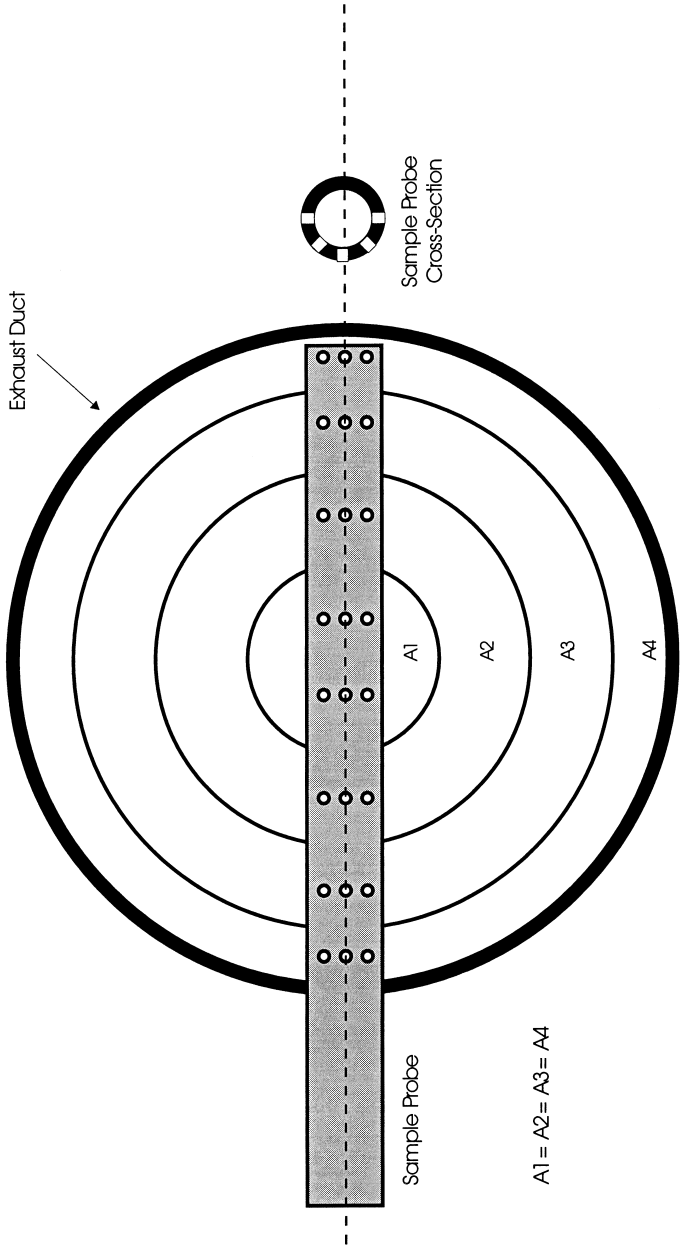

Figure B114-4 Particulate Sample Probe Design

[63 FR 18998, Apr. 16, 1998, as amended at 70 FR 40454, July 13, 2005]

§ 92.115 Calibrations; frequency and overview.

(a) Calibrations shall be performed as specified in §§ 92.116 through 92.122.

(b) At least monthly or after any maintenance which could alter calibration, perform the periodic calibrations required by § 92.118(a)(2) (certain analyzers may require more frequent calibration depending on the equipment and use). Exception: the water rejection ratio and the CO_2 rejection ratio on all NDIR analyzers is only required to be performed quarterly.

(c) At least monthly or after any maintenance which could alter calibration, calibrate the engine dynamometer flywheel torque and speed measurement transducers, as specified in § 92.116.

(d) At least monthly or after any maintenance which could alter calibration, check the oxides of nitrogen converter efficiency, as specified in § 92.121.

(e) At least weekly or after any maintenance which could alter calibration, check the dynamometer (if used) shaft torque feedback signal at steady-state conditions by comparing:

(1) Shaft torque feedback to dynamometer beam load; or

(2) By comparing in-line torque to armature current; or

(3) By checking the in-line torque meter with a dead weight per § 92.116(b)(1).

(f) At least quarterly or after any maintenance which could alter calibration, calibrate the fuel flow measurement system as specified in § 92.107.

(g) At least annually or after any maintenance which could alter calibration, calibrate the electrical output measurement system for the electrical load bank used for locomotive testing.

(h) Sample conditioning columns, if used in the CO analyzer train, should be checked at a frequency consistent with observed column life or when the indicator of the column packing begins to show deterioration.

(i) For equipment not addressed in §§ 92.116 through 92.122 calibrations shall be performed at least as often as required by the equipment manufacturer or as necessary according to good practices. The calibrations shall be performed in accordance with procedures specified by the equipment manufacturer.

(j) Where testing is conducted intermittently, calibrations are not required during period in which no testing is conducted, provided that times between the most recent calibrations and the date of any test does not exceed the calibration period. For example, if it has been more than one month since the analyzers have been calibrated (as specified in paragraph (c) of this section) then they must be calibrated prior to the start of testing.

§ 92.116 Engine output measurement system calibrations.

(a) *General requirements for dynamometer calibration.* (1) The engine flywheel torque and engine speed measurement transducers shall be calibrated with the calibration equipment described in this section.

(2) The engine flywheel torque feedback signals to the cycle verification equipment shall be electronically checked before each test, and adjusted as necessary.

(3) Other engine dynamometer system calibrations shall be performed as dictated by good engineering practice.

(4) When calibrating the engine flywheel torque transducer, any lever arm used to convert a weight or a force through a distance into a torque shall be used in a horizontal position (±5 degrees).

(5) Calibrated resistors may not be used for engine flywheel torque transducer calibration, but may be used to span the transducer prior to engine testing.

(b) *Dynamometer calibration equipment*—(1) *Torque calibration equipment.* Two techniques are allowed for torque calibration. Alternate techniques may be used if shown to yield equivalent accuracies. The NIST ''true'' value torque is defined as the torque calculated by taking the product of an NIST traceable weight or force and a sufficiently accurate horizontal lever arm distance, corrected for the hanging torque of the lever arm.

(i) The lever-arm dead-weight technique involves the placement of known weights at a known horizontal distance from the center of rotation of the

torque measuring device. The equipment required is:

(A) *Calibration weights.* A minimum of six calibration weights for each range of torque measuring device used are required. The weights must be approximately equally spaced and each must be traceable to NIST weights within 0.1 percent. Laboratories located in foreign countries may certify calibration weights to local government bureau standards. Certification of weight by state government Bureau of Weights and Measures is acceptable. Effects of changes in gravitational constant at the test site may be accounted for if desired.

(B) *Lever arm.* A lever arm with a minimum length of 24 inches is required. The horizontal distance from the centerline of the engine torque measurement device to the point of weight application shall be accurate to within ±0.10 inches. The arm must be balanced, or the hanging torque of the arm must be known to within ±0.1 ft-lbs.

(ii) The transfer technique involves the calibration of a master load cell (i.e., dynamometer case load cell). This calibration can be done with known calibration weights at known horizontal distances, or by using a hydraulically actuated precalibrated master load cell. This calibration is then transferred to the flywheel torque measuring device. The technique involves the following steps:

(A) A master load cell shall be either precalibrated or be calibrated per paragraph (b)(1)(i)(A) of this section with known weights traceable to NIST within 0.1 percent, and used with the lever arm(s) specified in this section. The dynamometer should be either running or vibrated during this calibration to minimize static hysteresis.

(B) Transfer of calibration from the case or master load cell to the flywheel torque measuring device shall be performed with the dynamometer operating at a constant speed. The flywheel torque measurement device readout shall be calibrated to the master load cell torque readout at a minimum of six loads approximately equally spaced across the full useful ranges of both measurement devices. (Note that good engineering practice requires that both devices have approximately equal useful ranges of torque measurement.) The transfer calibration shall be performed in a manner such that the accuracy requirements of § 92.106(b)(1)(ii) for the flywheel torque measurement device readout be met or exceeded.

(iii) Other techniques may be used if shown to yield equivalent accuracy.

(2) *Speed calibration equipment.* A 60 (or greater) tooth wheel in combination with a common mode rejection frequency counter is considered an absolute standard for engine or dynamometer speed.

(c) *Dynamometer calibration.* (1) If necessary, follow the manufacturer's instructions for initial start-up and basic operating adjustments.

(2) Check the dynamometer torque measurement for each range used by the following:

(i) Warm up the dynamometer following the equipment manufacturer's specifications.

(ii) Determine the dynamometer calibration moment arm. Equipment manufacturer's data, actual measurement, or the value recorded from the previous calibration used for this subpart may be used.

(iii) Calculate the indicated torque (IT) for each calibration weight to be used by:

IT=calibration weight (lb)×calibration moment arm (ft)

(iv) Attach each calibration weight specified in paragraph (b)(1)(i)(A) of this section to the moment arm at the calibration distance determined in paragraph (b)(2)(ii)(B) of this section. Record the power measurement equipment response (ft-lb) to each weight.

(v) For each calibration weight, compare the torque value measured in paragraph (b)(2)(iv) of this section to the calculated torque determined in paragraph (b)(2)(iii) of this section.

(vi) The measured torque must be within 2 percent of the calculated torque.

(vii) If the measured torque is not within 2 percent of the calculated torque, adjust or repair the system. Repeat the steps in paragraphs (b)(2)(i) through (b)(2)(vi) of this section with the adjusted or repaired system.

(3) *Option.* A master load-cell or transfer standard may be used to verify the in-use torque measurement system.

(i) The master load-cell and read out system must be calibrated with weights at each test weight specified in paragraph (b)(1)(i)(A) of this section. The calibration weights must be traceable to within 0.1 percent of NIST weights.

(ii) Warm up the dynamometer following the equipment manufacturer's specifications.

(iii) Attach the master load-cell and loading system.

(iv) Load the dynamometer to a minimum of 6 equally spaced torque values as indicated by the master load-cell for each in-use range used.

(v) The in-use torque measurement must be within 2 percent of the torque measured by the master system for each load used.

(vi) If the in-use torque is not within 2 percent of the master torque, adjust or repair the system. Repeat steps in paragraphs (b)(3)(ii) through (b)(3)(vi) of this section with the adjusted or repaired system.

(4) The dynamometer calibration must be completed within 2 hours from the completion of the dynamometer warm-up.

(d) *Electrical load banks.* Equipment used to measure the electrical power output dissipated by electrical load banks shall be calibrated as frequently as required by § 92.115, using a calibration procedure that is consistent with good engineering practice and approved by the Administrator.

§ 92.117 Gas meter or flow instrumentation calibration, particulate measurement.

(a) Sampling for particulate emissions requires the use of gas meters or flow instrumentation to determine flow through the particulate filters. These instruments shall receive initial and monthly calibrations as follows:

(1)(i) Install a calibration device in series with the instrument. A critical flow orifice, a bellmouth nozzle, or a laminar flow element or an NIST traceable flow calibration device is required as the standard device.

(ii) The flow system should be checked for leaks between the calibration and sampling meters, including any pumps that may be part of the system, using good engineering practice.

(2) Flow air through the calibration system at the sample flow rate used for particulate testing and at the backpressure which occurs during the sample test.

(3) When the temperature and pressure in the system have stabilized, measure the indicated gas volume over a time period of at least five minutes or until a gas volume of at least ±1 percent accuracy can be determined by the standard device. Record the stabilized air temperature and pressure upstream of the instrument and as required for the standard device.

(4) Calculate air flow at standard conditions as measured by both the standard device and the instrument(s).

(5) Repeat the procedures of paragraphs (a)(2) through (4) of this section using at least two flow rates which bracket the typical operating range.

(6) If the air flow at standard conditions measured by the instrument differs by ±1.0 percent of the maximum operating range or ±2.0 percent of the point (whichever is smaller), then a correction shall be made by either of the following two methods:

(i) Mechanically adjust the instrument so that it agrees with the calibration measurement at the specified flow rates using the criteria of paragraph (a)(6) of this section; or

(ii) Develop a continuous best fit calibration curve for the instrument (as a function of the calibration device flow measurement) from the calibration points to determine corrected flow. The points on the calibration curve relative to the calibration device measurements must be within ±1.0 percent of the maximum operating range of ±2.0 percent of the point through the filter.

(b) *Other systems.* A bell prover may be used to calibrate the instrument if the procedure outlined in ANSI B109.1–1992 (incorporated by reference at § 92.5) is used. Prior approval by the Administrator is not required to use the bell prover.

§ 92.118 Analyzer checks and calibrations.

(a)(1) Prior to initial use and after major repairs, bench check each analyzer for compliance with the specifications of § 92.109.

(2) The periodic calibrations are required:

(i) Leak check of the pressure side of the system (see paragraph (b) of this section). If the option described in paragraph (b)(2) of this section is used, a pressure leak check is not required.

(ii) Calibration of all analyzers (see §§ 92.119 through 92.122).

(iii) Check of the analysis system response time (see paragraph (c) of this section). If the option described in paragraph (c)(2) of this section is used, a response time check is not required.

(b) *Leak checks*—(1) *Vacuum side leak check*. (i) Any location within the analysis system where a vacuum leak could affect the test results must be checked.

(ii) The maximum allowable leakage rate on the vacuum side is 0.5 percent of the in-use flow rate for the portion of the system being checked. the analyzer flows and bypass flows may be used to estimate the in-use flow rates.

(iii) The sample probe and the connection between the sample probe and valve V2 may be excluded from the leak check.

(2) *Pressure side leak check*. (i) The maximum allowable leakage rate on the pressure side in 5 percent of the in-use flow rate.

(ii) Option: If the flow rate for each flow meter is equal to or greater than the flow rate recorded in paragraph (c)(2)(i) of this section, then a pressure side leak check is not required.

(c) *System response time; check procedure*. (1) After any major change in the system, check the system response time by the following procedure:

(i) Stabilize the operating temperature of the sample line, sample pump, and heated filters.

(ii) Introduce an HC span gas into the sampling system at the sample probe or valve V2 at atmospheric pressure. Simultaneously, start the time measurement.

(iii) When the HC instrument response is 95 percent of the span gas concentration used, stop the time measurement.

(iv) If the elapsed time is more than 20.0 seconds, make necessary adjustments.

(v) Repeat with the CO, CO_2, and NO_X instruments and span gases.

(2) *Option*. If the following parameters are determined, the initial system response time may be generally applied to future checks:

(i) *Analyzer and bypass flow rates*. (A) Determine by experimentation the minimum analyzer and bypass flow rates individually and in combination that will produce a response time as close as possible to 20.0 seconds per paragraph (c)(1) of this section.

(B) Record the highest minimum flow rate for each flow meter as determined in paragraph (c)(2)(i)(A) of this section.

(ii) *Capillary flow analyzers*. This procedure is applicable only to analyzers that have sample capillaries such as the HFID and CL analyzers. It is also assumed that the system has sample/span valves that perform the function of valves V9 and V13 in.

(A) Operate the analyzer(s) at the in-use capillary pressure.

(B) Adjust the bypass flow rate to the flow rate recorded in paragraph (c)(2)(i)(B) of this section.

(C) Measure and record the response time from the sample/span valve(s) per paragraph (c)(1) of this section.

(D) The response time required by paragraph (c)(2)(ii)(C) of this section can be determined by switching from the ''sample'' position to the ''span'' position of the sample/span valve and observing the analyzer response on a chart recorder. Normally, the ''sample'' position would select a ''room air'' sample and the ''span'' position would select a span gas.

(E) Adjust the bypass flow rate to the normal in-use value.

(F) Measure and record the response time from the sample/span valve(s) per paragraph (c)(1) of this section.

(G) Determine the slowest response time (step in paragraph (c)(2)(ii)(C) of this section or step in paragraph (c)(2)(ii)(D) of this section) and add 2 seconds to it.

§92.119 Hydrocarbon analyzer calibration.

The HFID hydrocarbon analyzer shall receive the following initial and periodic calibration:

(a) *Initial and periodic optimization of detector response.* Prior to introduction into service and at least annually thereafter, the HFID hydrocarbon analyzer shall be adjusted for optimum hydrocarbon response. Alternate methods yielding equivalent results may be used, if approved in advance by the Administrator.

(1) Follow good engineering practices for initial instrument start-up and basic operating adjustment using the appropriate fuel (see §92.112) and zero-grade air.

(2) Optimize on the most common operating range. Introduce into the analyzer a propane-in-air mixture with a propane concentration equal to approximately 90 percent of the most common operating range.

(3) HFID optimization is performed:

(i) According to the procedures outlined in Society of Automotive Engineers (SAE) paper No. 770141, ''Optimization of Flame Ionization Detector for Determination of Hydrocarbons in Diluted Automobile Exhaust'', author, Glenn D. Reschke (incorporated by reference at §92.5); or

(ii) According to the following procedures:

(A) If necessary, follow manufacturer's instructions for instrument start-up and basic operating adjustments.

(B) Set the oven temperature 5 °C hotter than the required sample-line temperature. Allow at least one-half hour after the oven has reached temperature for the system to equilibrate.

(C) *Initial fuel flow adjustment.* With the fuel and air-flow rates set at the manufacturer's recommendations, introduce a 350 ppmC ±75 ppmC span gas to the detector. Determine the response at a given fuel flow from the difference between the span-gas response and the zero-gas response. Incrementally adjust the fuel flow above and below the manufacturer's specification. Record the span and zero response at these fuel flows. A plot of the difference between the span and zero response versus fuel flow will be similar to the one shown in Figure B119–1 of this section. Adjust the fuel-flow rate to the rich side of the curve, as shown. This is initial flow-rate setting and may not be the final optimized flow rate.

(D) *Oxygen interference optimization.* Choose a range where the oxygen interference check gases (see §92.112) will fall in the upper 50 percent. Conduct this test with the oven temperature set as required. Oxygen interference check gas specifications are found in §92.112.

(*1*) Zero the analyzer.

(*2*) Span the analyzer with the 21-percent oxygen blend.

(*3*) Recheck zero response. If it has changed more than 0.5 percent of full scale repeat paragraphs (a)(3)(ii)(D) (*1*) and (*2*) of this section.

(*4*) Introduce the 5 percent and 10 percent oxygen interference check gases.

(*5*) Recheck the zero response. If it has changed more ±1 percent of full scale, repeat the test.

(*6*) Calculate the percent of oxygen interference (%O_2I) for each mixture in step in paragraph (a)(3)(ii)(D)(*4*) of this section.

Percent O_2I=((B-Analyzer response (ppmC))/B)×(100)

Analyzer response=((A)/(Percent of full-scale analyzer response due to A))×(Percent of full-scale analyzer response due to B)

Where:

A=hydrocarbon concentration (ppmC) of the span gas used in step in paragraph (a)(3)(ii)(D)(*2*) of this section.

B=hydrocarbon concentration (ppmC) of the oxygen interference check gases used in step in paragraph (a)(3)(ii)(D)(*4*) of this section.

(*7*) The percent of oxygen interference (%O_2I) must be less than ±3.0 percent for all required oxygen interference check gases prior to testing.

(*8*) If the oxygen interference is greater than the specifications, incrementally adjust the air flow above and below the manufacturer's specifications, repeating paragraphs (a)(3)(ii)(D) (*1*) through (*7*) of this section for each flow.

(*9*) If the oxygen interference is greater than the specification after adjusting the air flow, vary the fuel flow and thereafter the sample flow, repeating paragraphs (a)(3)(ii)(D) (*1*) through (*7*) of this section for each new setting.

(*10*) If the oxygen interference is still greater than the specifications, repair or replace the analyzer, FID fuel, or burner air prior to testing. Repeat this section with the repaired or replaced equipment or gases.

(E) *Linearity check*. For each range used, check linearity as follows:

(*1*) With the fuel flow, air flow and sample flow adjust to meet the oxygen interference specification, zero the analyzer.

(*2*) Span the analyzer using a calibration gas that will provide a response of approximately 90 percent of full-scale concentration.

(*3*) Recheck the zero response. If it has changed more than 0.5 percent of full scale, repeat steps in paragraphs (a)(3)(ii)(E) (*1*) and (*2*) of this seciton.

(*4*) Record the response of calibration gases having nominal concentrations of 30, 60, and 90 percent of full-scale concentration. It is permitted to use additional concentrations.

(*5*) Perform a linear least square regression on the data generated. Use an equation of the form y = mx, where x is the actual chart deflection and y is the concentration.

(*6*) Use the equation z = y/m to find the linear chart deflection (z) for each calibration gas concentration (y).

(*7*) Determine the linearity (%L) for each calibration gas by:

Percent L=(100)(z−x)/(Full-scale linear chart deflection)

(*8*) The linearity criterion is met if the %L is less than ±2 percent for each data point generated. Below 40 ppmC the linearity criterion may be expanded to ±4 percent. For each emission test, a calibration curve of the form y = mx is to be used. The slope (m) is defined for each range by the spanning process.

(*9*) If the %L for any point exceeds the specifications in step in paragraph (a)(3)(ii)(E)(*8*) of this section, the air fuel, and sample-flow rates may be varied within the boundaries of the oxygen interference specifications.

(*10*) If the %L for any data point still exceeds the specifications, repair or replace the analyzer, FID fuel, burner air, or calibration bottles prior to testing. Repeat the procedures of this section with the repaired or replaced equipment or gases.

(F) *Optimized flow rates*. The fuel-flow rate, air-flow rate and sample-flow rate and sample-flow rate are defined as ''optimized'' at this point.

(iii) Alternative procedures may be used if approved in advance by the Administrator.

(4) After the optimum flow rates have been determined they are recorded for future reference.

(b) *Initial and periodic calibration*. Prior to introduction into service and monthly thereafter, the HFID hydrocarbon analyzer shall be calibrated on all normally used instrument ranges. Use the same flow rate and pressures as when analyzing samples. Calibration gases shall be introduced directly at the analyzer.

(1) Adjust analyzer to optimize performance.

(2) Zero the hydrocarbon analyzer with zero-grade air.

(3) Calibrate on each used operating range with propane-in-air calibration gases having nominal concentrations of 15, 30, 45, 60, 75 and 90 percent of that range. For each range calibrated, if the deviation from a least-squares best-fit straight line is 2 percent or less of the value at each data point, concentration values may be calculated by use of single calibration factor for that range. If the deviation exceeds 2 percent at any point, the best-fit non-linear equation which represents the data to within 2 percent of each test point shall be used to determine concentration.

FIGURE TO §92.119

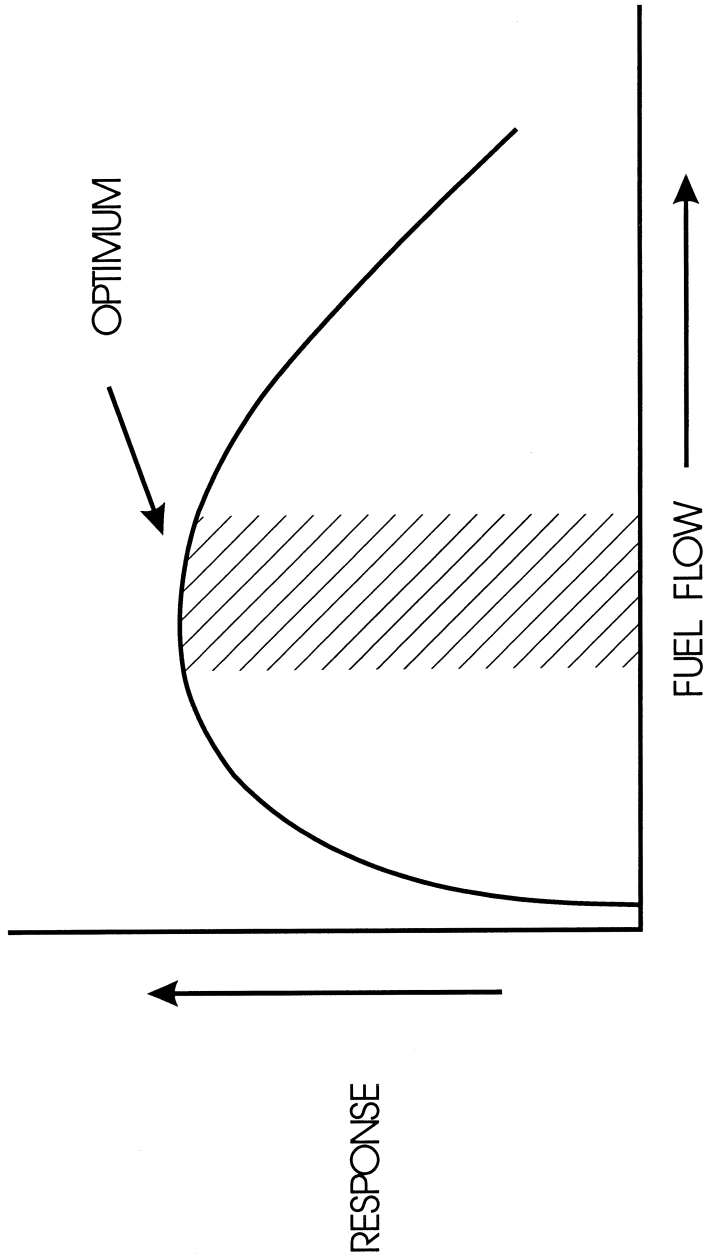

Figure B119-1 RESPONSE VS. FUEL FLOW

§ 92.120 NDIR analyzer calibration and checks.

(a) *NDIR water rejection ratio check.* (1) Zero and span the analyzer on the lowest range that will be used.

(2) Introduce a saturated mixture of water and zero gas at room temperature directly to the analyzer.

(3) Determine and record the analyzer operating pressure (GP) in absolute units in Pascal. Gauges G3 and G4 may be used if the values are converted to the correct units.

(4) Determine and record the temperature of the zero-gas mixture.

(5) Record the analyzers' response (AR) in ppm to the saturated zero-gas mixture.

(6) For the temperature recorded in paragraph (a)(4) of this section, determine the saturation vapor pressure.

(7) Calculate the water concentration (Z) in the mixture from:

$$Z=(PWB/GP)(10^6)$$

(8) Calculate the water rejection ratio (WRR) from:

$$WRR=(Z/AR)$$

(b) *NDIR CO_2 rejection ratio check.* (1) Zero and span the analyzer on the lowest range that will be used.

(2) Introduce a CO_2 calibration gas of at least 10 percent CO_2 or greater to the analyzer.

(3) Record the CO_2 calibration gas concentration in ppm.

(4) Record the analyzers' response (AR) in ppm to the CO_2 calibration gas.

(5) Calculate the CO_2 rejection ratio (CO_2RR) from:

$$CO_2RR=(ppm\ CO_2)/AR$$

(c) *NDIR analyzer calibration.* (1) Detector optimization. If necessary, follow the manufacturer's instructions for initial start-up and basic operating adjustments.

(2) Calibration curve. Develop a calibration curve for each range used as follows:

(i) Zero the analyzer.

(ii) Span the analyzer to give a response of approximately 90 percent of full-scale chart deflection.

(iii) Recheck the zero response. If it has changed more than 0.5 percent of full scale, repeat steps in paragraphs (c)(2)(i) and (c)(2)(ii) of this section.

(iv) Record the response of calibration gases having nominal concentrations of 15, 30, 45, 60, 75, and 90 percent of full-scale concentration.

(v) Generate a calibration curve. The calibration curve shall be of fourth order or less, have five or fewer coefficients, and be of the form of equation (1) or (2). Include zero as a data point. Compensation for known impurities in the zero gas can be made to the zero-data point. The calibration curve must fit the data points within 2 percent of point or 1 percent of full scale, whichever is less. Equations (1) and (2) follow:

$$y = Ax^4+Bx^3+Cx^2+Dx+E \quad (1)$$
$$y = x/(Ax^4+Bx^3+Cx^2+Dx+E) \quad (2)$$

where:

y = concentration.
x = chart deflection.

(vi) Option. A new calibration curve need not be generated if:

(A) A calibration curve conforming to paragraph (c)(2)(v) of this section exists;

(B) The responses generated in paragraph (c)(2)(iv) of this section are within 1 percent of full scale or 2 percent of point, whichever is less, of the responses predicted by the calibration curve for the gases used in paragraph (c)(2)(iv) of this section.

(vii) If multiple range analyzers are used, only the lowest range must meet the curve fit requirements below 15 percent of full scale.

(3) If any range is within 2 percent of being linear a linear calibration may be used. To determine if this criterion is met:

(i) Perform a linear least-square regression on the data generated. Use an equation of the form y=mx, where x is the actual chart deflection and y is the concentration.

(ii) Use the equation z=y/m to find the linear chart deflection (z) for each calibration gas concentration (y).

(iii) Determine the linearity (%L) for each calibration gas by:

$$\text{Percent } L=(100)(z-x)/(\text{Full-scale chart deflection})$$

(iv) The linearity criterion is met if the %L is less than ±2 percent for each data point generated. For each emission test, a calibration curve of the

form y=mx is to be used. The slope (m) is defined for each range by the spanning process.

§ 92.121 Oxides of nitrogen analyzer calibration and check.

(a) *Quench checks; NO_X analyzer.* (1) Perform the reaction chamber quench check for each model of high vacuum reaction chamber analyzer prior to initial use.

(2) Perform the reaction chamber quench check for each new analyzer that has an ambient pressure or ''soft vacuum'' reaction chamber prior to initial use. Additionally, perform this check prior to reusing an analyzer of this type any time any repairs could potentially alter any flow rate into the reaction chamber. This includes, but is not limited to, sample capillary, ozone capillary, and if used, dilution capillary.

(3) Quench check as follows:

(i) Calibrate the NO_X analyzer on the lowest range that will be used for testing.

(ii) Introduce a mixture of CO_2 calibration gas and NO_X calibration gas to the CL analyzer. Dynamic blending may be used to provide this mixture. Dynamic blending may be accomplished by analyzing the CO_2 in the mixture. The change in the CO_2 value due to blending may then be used to determine the true concentration of the NO_X in the mixture. The CO_2 concentration of the mixture shall be approximately equal to the highest concentration experienced during testing. Record the response.

(iii) Recheck the calibration. If it has changed more than ±1 percent of full scale, recalibrate and repeat the quench check.

(iv) Prior to testing, the difference between the calculated NO_X response and the response of NO_X in the presence of CO_2 (step in paragraph (a)(3)(ii) of this section must not be greater than 3.0 percent of full-scale. The calculated NO_X response is based on the calibration performed in step in paragraph (a)(3)(i) this section.

(b) *Oxides of nitrogen analyzer calibration.* (1) Every 30 days, perform a converter-efficiency check (see paragraph (b)(2) of this section) and a linearity check (see paragraph (b)(3) of this section).

(2) Converter-efficiency check. The apparatus described and illustrated in Figure B121–1 of this section is to be used to determine the conversion efficiency of devices that convert NO_2 to NO. The following procedure is to be used in determining the values to be used in the equation below:

(i) Follow the manufacturer's instructions for instrument startup and operation.

(ii) Zero the oxides of nitrogen analyzer.

(iii) Connect the outlet of the NO_X generator to the sample inlet of the oxides of nitrogen analyzer which has been set to the most common operating range.

(iv) Introduce into the NO_X generator-analyzer system a span gas with a NO concentration equal to approximately 80 percent of the most common operating range. The NO_2 content of the gas mixture shall be less than 5 percent of the NO_X concentration.

(v) With the oxides of nitrogen analyzer in the NO Mode, record the concentration of NO indicated by the analyzer.

(vi) Turn on the NO_X generator O_2 (or air) supply and adjust the O_2 (or air) flow rate so that the NO indicated by the analyzer is about 10 percent less than indicated in step in paragraph (b)(2)(v) of this section. Record the concentration of NO in this $NO+O_2$ mixture.

(vii) Switch the NO_X generator to the generation mode and adjust the generation rate so that the NO measured on the analyzer is 20 percent of that measured in step in paragraph (b)(2)(v) of this section. There must be at least 10 percent unreacted NO at this point. Record the concentration of residual NO.

(viii) Switch the oxides of nitrogen analyzer to the NO_X mode and measure total NO_X. Record this value.

(ix) Switch off the NO_X generation, but maintain gas flow through the system. The oxides of nitrogen analyzer will indicate the total NO_X in the $NO+O_2$ mixture. Record this value.

(x) Turn off the NO_X generator O_2 (or air) supply. The analyzer will now indicate the total NO_X in the original NO

in N_2 mixture. This value should be no more than 5 percent above the value indicated in step in paragraph (b)(2)(iv) of this section.

(xi) Calculate the efficiency of the NO_X converter by substituting the concentrations obtained into the following equation:

(A) Percent Efficiency=(1+(a−b)/(c−d))(100)

where:

a=concentration obtained in paragraph (b)(2)(viii) of this section.
b=concentration obtained in paragraph (b)(2)(ix) of this section.
c=concentration obtained in paragraph (b)(2)(vi) of this section.
d=concentration obtained in paragraph (b)(2)(vii) of this section.

(B) The efficiency of the converter shall be greater than 90 percent. Adjustment of the converter temperature may be necessary to maximize the efficiency. If the converter does not meet the conversion-efficiency specifications, repair or replace the unit prior to testing. Repeat the procedures of this section with the repaired or new converter.

(3) Linearity check. For each range used, check linearity as follows:

(i) With the operating parameters adjusted to meet the converter efficiency check and the quench checks, zero the analyzer.

(ii) Span the analyzer using a calibration gas that will give a response of approximately 90 percent of full-scale concentration.

(iii) Recheck the zero response. If it has changed more than 0.5 percent of full scale, repeat steps in paragraphs (b)(3)(i) and (b)(3)(ii) of this section.

(iv) Record the response of calibration gases having nominal concentrations of 30, 60 and 90 percent of full-scale concentration. It is permitted to use additional concentrations.

(v) Perform a linear least-square regression on the data generated. Use an equation of the form y=mx where x is the actual chart deflection and y is the concentration.

(vi) Use the equation z=y/m to find the linear chart deflection (z) for each calibration gas concentration (y).

(vii) Determine the linearity (%L) for each calibration gas by:

Percent L=(100)(z−x)/(Full-scale chart deflection)

(viii) The linearity criterion is met if the %L is less than ±2 percent of each data point generated. For each emission test, a calibration curve of the form y=mx is to be used. The slope (m) is defined for each range by the spanning process.

(ix) If the %L exceeds ±2 percent for any data point generated, repair or replace the analyzer or calibration bottles prior to testing. Repeat the procedures of this section with the repaired or replaced equipment or gases.

(x) Perform a converter-efficiency check (see paragraph (b)(2) of this section).

(xi) The operating parameters are defined as ''optimized'' at this point.

(4) Converter checking gas. If the converter quick-check procedure is to be employed, paragraph (b)(5) of this section, a converter checking gas bottle must be named. The following naming procedure must occur after each converter efficiency check, paragraph (b)(2) of this section.

(i) A gas bottle with an NO_2 concentration equal to approximately 80 percent of the most common operation range shall be designated as the converter checking gas bottle. Its NO concentration shall be less than 25 percent of its NO_2 concentration, on a volume basis.

(ii) On the most common operating range, zero and span the analyzer in the NO_X mode. Use a calibration gas with a concentration equal to approximately 80 percent of the range for spanning.

(iii) Introduce the converter checking gas. Analyze and record concentrations in both the NO_X mode (X) and NO mode (Y).

(iv) Calculate the concentration of the converter checking gas using the results from step in paragraph (b)(4)(iii) of this section and the converter efficiency from paragraph (b)(2) of this section as follows:

Concentration=(((X−Y)(100))/Efficiency)+Y

(5) Converter quick-check.

(i) Span the analyzer in the normal manner (NO_X mode) for the most common operating range.

(ii) Analyze the converter checking gas in the NO_X mode, record the concentration.

(iii) Compare the observed concentration with the concentration assigned under the procedure in paragraph (b)(4) of this section. If the observed concentration is equal to or greater than 90 percent of the assigned concentration, the converter operation is satisfactory.

(c) *Initial and periodic calibration.* Prior to its introduction into service and monthly thereafter, the chemiluminescent oxides of nitrogen analyzer shall be calibrated on all normally used instrument ranges. Use the same flow rate as when analyzing samples. Proceed as follows:

(1) Adjust analyzer to optimize performance.

(2) Zero the oxides of nitrogen analyzer with zero-grade air or zero-grade nitrogen.

(3) Calibrate on each normally used operating range with NO-in-N_2 calibration gases with nominal concentrations of 15, 30, 45, 60, 75 and 90 percent of that range. For each range calibrated, if the deviation from a least-squares best-fit straight line is 2 percent or less of the value at each data point, concentration values may be calculated by use of a single calibration factor for that range. If the deviation exceeds 2 percent at any point, the best-fit non-linear equation which represents the data to within 2 percent of each test point shall be used to determine concentration.

(d) If a stainless steel NO_2 to NO converter is used, condition all new or replacement converters. The conditioning consists of either purging the converter with air for a minimum of 4 hours or until the converter efficiency is greater than 90 percent. The converter must be at operational temperature while purging. Do not use this procedure prior to checking converter efficiency on in-use converters.

FIGURE TO § 92.121

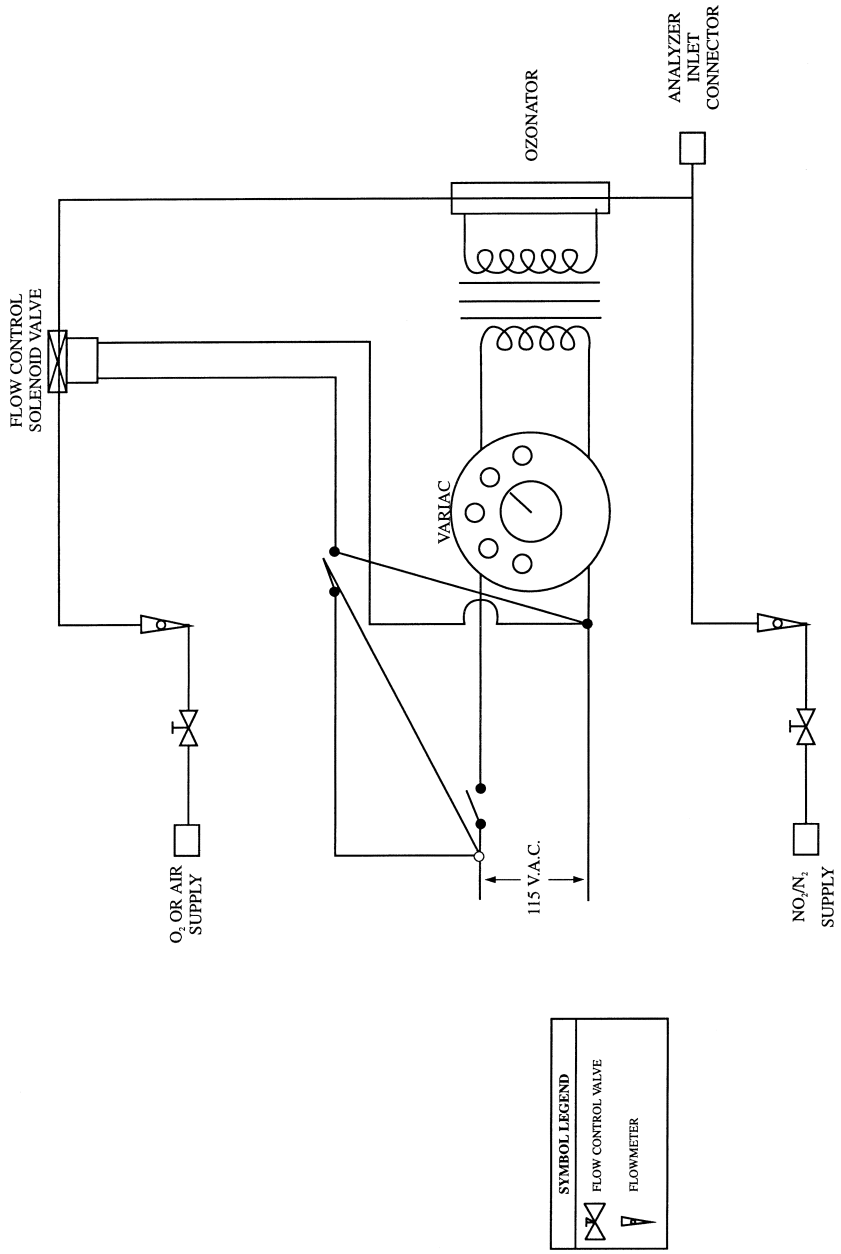

Figure B121-1 NOx CONVERTER EFFICIENCY DETECTOR

§ 92.122 Smoke meter calibration.

The smokemeter shall be checked according to the following procedure prior to each test:

(a) The zero control shall be adjusted under conditions of ''no smoke'' to give a recorder or data collection equipment response of zero;

(b) Calibrated neutral density filters having approximately 10, 20, and 40 percent opacity shall be employed to check the linearity of the instrument. The filter(s) shall be inserted in the light path perpendicular to the axis of the beam and adjacent to the opening from which the beam of light from the light source emanates, and the recorder response shall be noted. Filters with exposed filtering media should be checked for opacity every six months; all other filters shall be checked every year, using NIST or equivalent reference filters. Deviations in excess of 1 percent of the nominal opacity shall be corrected.

§ 92.123 Test procedure; general requirements.

(a) The locomotive/locomotive engine test procedure is designed to determine the brake specific emissions of hydrocarbons (HC, total or non-methane as applicable), total hydrocarbon equivalent (THCE) and aldehydes (as applicable), carbon monoxide (CO), oxides of nitrogen (NO_X), and particulates, and the opacity of smoke emissions. The test procedure consists of measurements of brake specific emissions and smoke opacity at each throttle position and of measurements of smoke opacity during each change in throttle position as engine power is increased. If less than 2 percent of the total exhaust flow is removed for gaseous and particulate sampling in notches 1 through 8, and if less than 4 percent of the total exhaust flow is removed for gaseous and particulate sampling at idle and dynamic brake, all measurements of gaseous, particulate and smoke emissions may be performed during one test sequence. If more than 2 percent, or 4 percent as applicable, of the total exhaust is removed for gaseous and particulate sampling, measurements of gaseous, and particulate emissions are performed during one test sequence, and a second test sequence is performed for the measurement of smoke.

(1) In the raw exhaust sampling procedure, sample is collected directly from the exhaust stream during each throttle setting. Particulates are collected on filters following dilution with ambient air of another raw exhaust sample. The fuel flow rate for each throttle setting is measured.

(2) For locomotives with multiple exhaust stacks, smoke testing is required for only one of the exhaust stacks provided the following conditions are met:

(i) The stack that is not tested is not visibly smokier than the stack that is tested, and

(ii) None of the measured opacity values for the stack tested are greater than three-quarters of the level allowed by any of the applicable smoke standards.

(b) The test consists of prescribed sequences of engine operating conditions (see §§ 92.124 and 92.126) to be conducted either on a locomotive; or with the engine mounted on an engine dynamometer, or attached to a locomotive alternator/generator.

(1) *Locomotive testing.* (i) The electrical power output produced by the alternator/generator at each throttle setting is recorded as measurements of either the wattmeter or the output voltage, phase angle, and current flow through the electrical resistance bank.

(ii) The locomotive fuel supply system shall be disconnected and a system capable of measuring the net rate at which fuel is supplied to the engine (accounting for fuel recycle) shall be connected.

(2) *Engine testing.* (i) When the test is performed using a dynamometer, engine torque and rpm shall be recorded during each throttle setting.

(ii) The complete engine shall be tested, with all emission control devices, and charge air cooling equipment installed and functioning.

(iii) On air-cooled engines, the engine cooling fan shall be installed.

(iv) Additional accessories (e.g., air compressors) shall be installed or their loading simulated if typical of the in-use application. In the case of simulated accessory loadings, the manufacturer shall make available to the Administrator documentation which

shows that the simulated loading is representative of in-use operation. Power for accessories necessary to operate the engine (such as fuel pumps) shall be treated as parasitic losses and would not be included in the engine power output for purposes of calculating brake specific emissions.

(v) The engine may be equipped with a production type starter.

(vi) Means of engine cooling shall be used which will maintain the engine operating temperatures (e.g., temperatures of intake air downstream of charge air coolers, oil, water, etc.) at approximately the same temperature as would occur in a locomotive at each test point under the equivalent ambient conditions. In the case of engine intake air after compression and cooling in the charge air cooler(s), the temperature of the air entering the engine shall be within ±5 °F, at each test point, of the typical temperatures occurring in locomotive operations under ambient conditions represented by the test. Auxiliary fan(s) may be used to maintain engine cooling during operation on the dynamometer. Rust inhibitors and lubrication additives may be used, up to the levels recommended by the additive manufacturer. If antifreeze is to be used in the locomotive application, antifreeze mixtures and other coolants typical of those approved for use in the locomotive may be used.

(vii) The provisions of paragraph (b)(1)(i) of this section apply to engine testing using a locomotive alternator/generator instead of a dynamometer.

[63 FR 18998, Apr. 16, 1998, as amended at 70 FR 40454, July 13, 2005]

§ 92.124 Test sequence; general requirements.

(a) *Air temperature.* (1) The temperature of dilution air for the particulate sample dilution tunnel shall comply with the requirements of § 92.114 throughout the test sequence.

(2) For the testing of locomotives and engines, the ambient (test cell or out-of-door) air temperature, the temperature of the engine intake air, and the temperature of the air which provides cooling for the engine charge air cooling system shall be between 45 °F (7 °C) and 105 °F (41 °C) throughout the test sequence. Manufacturers and remanufacturers may test at higher temperatures without approval from the Administrator, but no corrections are allowed for the deviations from test conditions.

(b) For the testing of locomotives and engines, the atmospheric pressure shall be between 31.0 inches Hg and 26.0 inches Hg throughout the test sequence. Manufacturers and remanufacturers may test at lower pressures without approval from the Administrator, but no corrections are allowed for the deviations from test conditions.

(c) No control of humidity is required for ambient air, engine intake air or dilution air.

(d) *Flow restrictions*—(1) *Locomotive testing.* Restrictions to the flow of air into the engine and of exhaust out of the engine shall be those inherent to the locomotive. No adjustments or changes shall be made to these parameters. The temperature of the inlet fuel to the engine shall not exceed 125 °F.

(2) *Engine testing.* (i) Air inlet and exhaust restrictions shall be set to represent the average restrictions which would be seen in use in a representative application.

(ii) Inlet depression and exhaust backpressure shall be set with the engine operating at rated speed and maximum power, i.e., throttle notch 8.

(iii) The locations at which the inlet depression and exhaust backpressure are measured shall be specified by the manufacturer or remanufacturer.

(iv) The settings shall be made during the preconditioning.

(e) Pre-test engine measurements (e.g., idle and throttle notch speeds, fuel flows, etc.), pre-test engine performance checks (e.g., verification of engine power, etc.) and pre-test system calibrations (e.g., inlet and exhaust restrictions, etc.) can be done during engine preconditioning, or at the manufacturer's convenience subject to the requirements of good engineering practice.

(f) The required test sequence is described in Table B124–1 of this section, as follows:

TABLE B124–1

Test sequence for locomotives and locomotive engines

Mode No.	Notch setting	Time in notch	Emissions measured[2]	Power, and fuel consumption measured
Warmup	Notch 8	5 ±1 min	None	None
Warmup	Lowest Idle	15 min maximum (after engine speed reaches lowest idle speed).	None	None
1a	Low Idle[1]	6 min minimum	All	Both
1	Normal Idle	6 min minimum	All	Both
2	Dynamic Brake[1]	6 min minimum	All	Both
3	Notch 1	6 min minimum	All	Both
4	Notch 2	6 min minimum	All	Both
5	Notch 3	6 min minimum	All	Both
6	Notch 4	6 min minimum	All	Both
7	Notch 5	6 min minimum	All	Both
8	Notch 6	6 min minimum	All	Both
9	Notch 7	6 min minimum	All	Both
10	Notch 8	15 min minimum	All	Both

[1] Omit if not so equipped.
[2] The EPA test sequence for locomotives and locomotive engines may be performed once, with gaseous, particulate and smoke measurements performed simultaneously, or it may be performed twice with gaseous, and particulate measurements performed during one test sequence and smoke measurements performed during the other test sequence. The minimum time in notch is three minutes for test sequences in which only smoke is measured.

[63 FR 18998, Apr. 16, 1998, as amended at 70 FR 40454, July 13, 2005]

§92.125 Pre-test procedures and preconditioning.

(a) *Locomotive testing.* (1) Determine engine lubricating oil and coolant levels and fill as necessary to manufacturers recommended full levels.

(2) Connect fuel supply system and purge as necessary; determine that the fuel to be used during emission testing is in compliance with the specifications of §92.113.

(3) Install instrumentation, engine loading equipment and sampling equipment as required.

(4) Operate the engine until it has reached the specified operating temperature.

(b) *Engine testing.* (1) Determine engine lubricating oil level and fill as necessary to manufacturers recommended full level.

(2)(i) Connect fuel supply system and purge as necessary; determine that the fuel to be used during emission testing is in compliance with the specifications of §92.113.

(ii) Connect engine cooling system.

(3) Install instrumentation, and sampling equipment as required. Couple the engine to the dynamometer or locomotive alternator/generator.

(4) Start cooling system.

(5) Operate the engine until it has reached the specified operating temperature.

(6) Establish that the temperature of intake air entering the engine after compression and cooling in the charge air cooler(s), at each test point, is within ±5 °F of the temperatures which occur in locomotive operations at the ambient temperature represented by the test.

(c) *Both locomotive and engine testing.* (1) Allow a minimum of 30 minutes warm-up in the stand-by or operating mode prior to spanning the analyzers.

(2) Replace or clean filter elements (sampling and analytical systems) as necessary, and then vacuum leak check the system, §92.118. A pressure leak check is also permitted per §92.118. Allow the heated sample line, filters, and pumps to reach operating temperature.

(3) Perform the following system checks:

(i) If a stainless steel NO_2 to NO converter is used, purge the converter with air (zero-grade air, room air, or O_2) for a minimum of 30 minutes. The converter must be at operational temperature while purging.

(ii) Check the sample system temperatures (see §92.114).

(iii) Check the system response time (see §92.118). System response time

may be applied from the most recent check of response time if all of the following are met:

(A) The flow rate for each flow meter is equal to or greater than the flow rate recorded in § 92.118.

(B) For analyzers with capillaries, the response time from the sample/span valve is measured using in-use pressures and bypass flows (see § 92.118).

(C) The response time measured in step in paragraph (c)(3)(iii)(B) of this section is equal to or less than the slowest response time determined for *Capillary flow analyzers* in § 92.118 plus 2 seconds.

(iv) A hang-up check is permitted.

(v) A converter-efficiency check is permitted. The check need not conform to § 92.121. The test procedure may be aborted at this point in the procedure in order to repair the NO_2 to NO converter. If the test is aborted, the converter must pass the efficiency check described in § 92.121 prior to starting the test run.

(4) Introduce the zero-grade gases at the same flow rates and pressures used to calibrate the analyzers and zero the analyzers on the lowest anticipated range that will be used during the test. Immediately prior to each test, obtain a stable zero for each anticipated range that will be used during the test.

(5) Introduce span gases to the instruments under the same flow conditions as were used for the zero gases. Adjust the instrument gains on the lowest range that will be used to give the desired value. Span gases should have a concentration greater than 70 percent of full scale for each range used. Immediately prior to each test, record the response to the span gas and the span-gas concentration for each range that will be used during the test.

(6) Check the zero responses. If they have changed more than 0.5 percent of full scale, repeat paragraphs (c)(4) and (5) of this section.

(7) Check system flow rates and pressures. Note the values of gauges for reference during the test.

§ 92.126 Test run.

(a) The following steps shall be taken for each test:

(1) Prepare the locomotive, engine, dynamometer, (as applicable) and sampling system for the test. Change filters, etc. and leak check as necessary.

(2) Connect sampling equipment as appropriate for the sampling procedure employed; i.e. raw or dilute (evacuated sample collection bags, particulate, and raw exhaust sampling equipment, particulate sample filters, fuel flow measurement equipment, etc.).

(3) Start the particulate dilution tunnel, the sample pumps, the engine cooling fan(s) (engine dynamometer testing) and the data collection and sampling systems (except particulate sample collection). The heated components of any continuous sampling systems(s) (if applicable) shall be preheated to their designated operating temperatures before the test begins.

(4) Adjust the sample flow rates to the desired flow rates and set gas flow measuring devices to zero (particulate dilution tunnel).

(5) Read and record all required general and pre-test data (i.e., all required data other than data that can only be collected during or after the emission test).

(6) Warm-up the locomotive or locomotive engines according to normal warm-up procedures.

(7) Begin the EPA Test Sequence for Locomotives and Locomotive Engines (see § 92.124). Record all required general and test data throughout the duration of the test sequence.

(i) Mark the start of the EPA Test Sequence for Locomotives and Locomotive Engines on all data records.

(ii) Begin emission measurement after completing the warmup phase of the EPA Test Sequence for Locomotives and Locomotive Engines, as specified in paragraph (b) of this section. Mark the start and end of each mode on all data records.

(iii) A mode shall be voided where the requirements of this subpart that apply to that test mode are not met. This includes the following:

(A) The data acquisition is terminated prematurely; or

(B) For engine testing, the engine speed or power output exceeds the tolerance bands established for that mode; or

(C) Measured concentrations exceed the range of the instrument; or

(D) The test equipment malfunctions.

(iv) Modes within the test sequence shall be repeated if it is voided during the performance of the test sequence. A mode can be repeated by:

(A) Repeating the two preceding modes and then continuing with the test sequence, provided that the locomotive or engine is not shut down after the voided test mode; or

(B) Repeating the preceding mode and then continuing with the test sequence from that point, provided that the locomotive or engine is not operated in any mode with lower power than the preceding mode after the voided test mode. For example, if the Notch 2 mode is voided, then the locomotive or engine would be returned to Notch 1 while any repairs are made.

(b) *Sampling and measurement timing.* (1) Gaseous emissions shall be sampled and measured continuously.

(2)(i) Sampling of particulate emissions from the raw exhaust (for dilution) shall be conducted continuously.

(ii) Sampling of particulates from the diluted exhaust shall begin within ten seconds after the beginning of each test mode, and shall end six minutes after the beginning of each test mode.

(iii) Sampling of CO_2 in the dilution air and diluted exhaust does not need to be continuous, but the measurements used for the calculations must be made after the first two minutes of each mode.

(3) Fuel flow rate shall be measured continuously. The value reported for the fuel flow rate shall be a one-minute average of the instantaneous fuel flow measurements taken during the last minute of the minimum sampling period listed in Table B124–1 in § 92.124; except for testing during idle modes, where it shall be a three-minute average of the instantaneous fuel flow measurements taken during the last three minutes of the minimum sampling period listed in Table B124–1 in § 92.124. Sampling periods greater than one minute are allowed, consistent with good engineering practice. Fuel flow averaging periods should generally match the emission sampling periods as closely as is practicable.

(4) Engine power shall be measured continuously. The value reported for the engine power shall be a one-minute average of the instantaneous power measurements taken during the last minute of the minimum sampling period listed in Table B124–1 in § 92.124.

(c) *Exhaust gas measurements.* (1) Should the analyzer response exceed 100 percent of full scale or respond less than 15 percent of full scale, the next higher or lower analyzer range shall be used.

(2) Each analyzer range that may be used during a test sequence must have the zero and span responses recorded prior to the execution of the test sequence. Only the range(s) used to measure the emissions during a test sequence are required to have their zero and span recorded after the completion of the test sequence.

(3) It is permitted to change filter elements between test modes, provided such changes do not cause a mode to be voided.

(4) A leak check is permitted between test modes, provided such changes do not cause a mode to be voided.

(5) A hang-up check is permitted between test modes, provided such changes do not cause a mode to be voided.

(6) If, during the emission measurement portions of a test, the value of the gauges downstream of the NDIR analyzer(s) differs by more than ±2 inches of water from the pretest value, the test is void.

(7)(i) For bag samples, as soon as possible transfer the exhaust and dilution air bag samples to the analytical system and process the samples.

(ii) A stabilized reading of the exhaust sample bag on all applicable analyzers shall be made within 20 minutes of the end of the sample collection phase of the mode.

[63 FR 18998, Apr. 16, 1998, as amended at 70 FR 40454, July 13, 2005]

§ 92.127 Emission measurement accuracy.

(a) Good engineering practice dictates that exhaust emission sample analyzer readings below 15 percent of full scale chart deflection should generally not be used.

(b) Some high resolution read-out systems such as computers, data loggers, etc., can provide sufficient accuracy and resolution below 15 percent of full scale. Such systems may be used

provided that additional calibrations are made to ensure the accuracy of the calibration curves. The following procedure for calibration below 15 percent of full scale may be used:

(1) If a 16-point gas divider is used, 50 percent of the calibration points shall be below 10 percent of full scale. The gas divider shall conform to the accuracy requirements specified in § 92.112.

(2) If a 7- or 9-point gas divider is used, the gas divider shall conform to the accuracy requirements specified in § 92.112, and shall be used according to the following procedure:

(i) Span the full analyzer range using a top range calibration gas meeting the calibration gas accuracy requirements of § 92.112.

(ii) Generate a calibration curve according to, and meeting the applicable requirements of §§ 92.118 through 92.122.

(iii) Select a calibration gas (a span gas may be used for calibrating the CO_2 analyzer) with a concentration between the two lowest non-zero gas divider increments. This gas must be ''named'' to an accuracy of ±1.0 percent (±2.0 percent for CO_2 span gas) of NIST gas standards, or other standards approved by the Administrator.

(iv) Using the calibration curve fitted to the points generated in paragraphs (b)(2)(i) and (ii) of this section, check the concentration of the gas selected in paragraph (b)(2)(iii) of this section. The concentration derived from the curve shall be within ±2.3 percent (±2.8 percent for CO_2 span gas) of the gas' original named concentration.

(v) Provided the requirements of paragraph (b)(2)(iv) of this section are met, use the gas divider with the gas selected in paragraph (b)(2)(iii) of this section and determine the remainder of the calibration points. Fit a calibration curve per §§ 92.118 through 92.122 for the entire analyzer range.

§ 92.128 Particulate handling and weighing.

(a) At least 1 hour before the test, place each filter in a closed (to eliminate dust contamination) but unsealed (to permit humidity exchange) petri dish and place in a weighing chamber meeting the specifications of § 92.110(a) of this section for stabilization.

(b) At the end of the stabilization period, weigh each filter on the microbalance. This reading is the tare weight and must be recorded.

(c) The filter shall then be stored in a covered petri dish or a sealed filter holder until needed for testing. If the filters are transported to a remote test location, the filter pairs, stored in individual petri dishes, should be transported in sealed plastic bags to prevent contamination. At the conclusion of a test run, the filters should be removed from the filter holder, and placed face to face in a covered but unsealed petri dish, with the primary filter placed face up in the dish. The filters shall be weighed as a pair. If the filters need to be transported from a remote test site, back to the weighing chamber, the petri dishes should be placed in a sealed plastic bag to prevent contamination. Care should be taken in transporting the used filters such that they are not exposed to excessive, sustained direct sunlight, or excessive handling.

(d) After the emissions test, and after the sample and back-up filters have been returned to the weighing room after being used, they must be conditioned for at least 1 hour but not more than 80 hours and then weighed. This reading is the gross weight of the filter and must be recorded.

(e) The net weight of each filter is its gross weight minus its tare weight. Should the sample on the filter contact the petri dish or any other surface, the test is void and must be rerun.

(f) The particulate filter weight (Pf) is the sum of the net weight of the primary filter plus the net weight of the backup filter.

(g) The following optional weighting procedure is permitted:

(1) At the end of the stabilization period, weigh both the primary and back-up filters as a pair. This reading is the tare weight and must be recorded.

(2) After the emissions test, in removing the filters from the filter holder, the back-up filter is inverted on top of the primary filter. They must then be conditioned in the weighing chamber for at least 1 hour but not more than 80 hours. The filters are then weighed as a pair. This reading is the gross weight of the filters (Pf) and must be recorded.

(3) Paragraphs (a), (c), and (e) of this section apply to this option, except that the word ''filter'' is replaced by ''filters''.

§ 92.129 Exhaust sample analysis.

(a) The analyzer response may be read by automatic data collection (ADC) equipment such as computers, data loggers, etc. If ADC equipment is used the following is required:

(1) The response complies with § 92.130.

(2) The response required in paragraph (a)(1) of this section may be stored on long-term computer storage devices such as computer tapes, storage discs, or they may be printed in a listing for storage. In either case a chart recorder is not required and records from a chart recorder, if they exist, need not be stored.

(3) If the data from ADC equipment is used as permanent records, the ADC equipment and the analyzer values as interpreted by the ADC equipment are subject to the calibration specifications in §§ 92.118 through 92.122, as if the ADC equipment were part of the analyzer.

(b) Data records from any one or a combination of analyzers may be stored as chart recorder records.

(c) Software zero and span.

(1) The use of ''software'' zero and span is permitted. The process of software zero and span refers to the technique of initially adjusting the analyzer zero and span responses to the calibration curve values, but for subsequent zero and span checks the analyzer response is simply recorded without adjusting the analyzer gain. The observed analyzer response recorded from the subsequent check is mathematically corrected back to the calibration curve values for zero and span. The same mathematical correction is then applied to the analyzer's response to a sample of exhaust gas in order to compute the true sample concentration.

(2) The maximum amount of software zero and span mathematical correction is ±10 percent of full scale chart deflection.

(3) Software zero and span may be used to switch between ranges without adjusting the gain of the analyzer.

(4) The software zero and span technique may not be used to mask analyzer drift. The observed chart deflection before and after a given time period or event shall be used for computing the drift. Software zero and span may be used after the drift has been computed to mathematically adjust any span drift so that the ''after'' span check may be transformed into the ''before'' span check for the next mode.

(d) For sample analysis perform the following sequence:

(1) Warm-up and stabilize the analyzers; clean and/or replace filter elements, conditioning columns (if used), etc., as necessary.

(2) Leak check portions of the sampling system that operate at negative gauge pressures when sampling, and allow heated sample lines, filters, pumps, etc., to stabilize at operating temperature.

(3) Optional: Perform a hang-up check for the HFID sampling system:

(i) Zero the analyzer using zero air introduced at the analyzer port.

(ii) Flow zero air through the overflow sampling system, where an overflow system is used. Check the analyzer response.

(iii) If the overflow zero response exceeds the analyzer zero response by 2 percent or more of the HFID full-scale deflection, hang-up is indicated and corrective action must be taken.

(iv) The complete system hang-up check specified in paragraph (f) of this section is recommended as a periodic check.

(4) Obtain a stable zero reading.

(5) Zero and span each range to be used on each analyzer used prior to the beginning of the test sequence. The span gases shall have a concentration between 75 and 100 percent of full scale chart deflection. The flow rates and system pressures shall be approximately the same as those encountered during sampling. The HFID analyzer shall be zeroed and spanned through the overflow sampling system, where an overflow system is used.

(6) Re-check zero response. If this zero response differs from the zero response recorded in paragraph (d)(5) of this section by more than 1 percent of full scale, then paragraphs (d) (4), (5),

and (6) of this section should be repeated.

(7) If a chart recorder is used, identify and record the most recent zero and span response as the pre-analysis values.

(8) If ADC equipment is used, electronically record the most recent zero and span response as the pre-analysis values.

(9) Measure (or collect a sample of) the emissions continuously during each mode of the test cycle. Indicate the start of the test, the range(s) used, and the end of the test on the recording medium (chart paper or ADC equipment). Maintain approximately the same flow rates and system pressures used in paragraph (d)(5) of this section.

(10)(i) Collect background HC, CO, CO_2, and NO_X in a sample bag (optional).

(ii) Measure the concentration of CO_2 in the dilution air and the diluted exhaust for particulate measurements.

(11) Perform a post-analysis zero and span check for each range used at the conditions specified in paragraph (d)(5) of this section. Record these responses as the post-analysis values.

(12) Neither the zero drift nor the span drift between the pre-analysis and post-analysis checks on any range used may exceed 3 percent for HC, or 2 percent for NO_X. CO, and CO_2, of full scale chart deflection, or the test is void. (If the HC drift is greater than 3 percent of full-scale chart deflection, hydrocarbon hang-up is likely.)

(13) Determine HC background levels (if necessary) by introducing the background sample into the overflow sample system.

(14) Determine background levels of NO_X. CO, or CO_2 (if necessary).

(e) HC hang-up. If HC hang-up is indicated, the following sequence may be performed:

(1) Fill a clean sample bag with background air.

(2) Zero and span the HFID at the analyzer ports.

(3) Analyze the background air sample bag through the analyzer ports.

(4) Analyze the background air through the entire sample probe system.

(5) If the difference between the readings obtained is 2 percent or more of the HFID full scale deflection:

(i) Clean the sample probe and the sample line;

(ii) Reassemble the sample system;

(iii) Heat to specified temperature; and

(iv) Repeat the procedure in this paragraph (e).

§ 92.130 Determination of steady-state concentrations.

(a)(1) For HC and NO_X emissions, a steady-state concentration measurement, measured after 300 seconds (or 840 seconds for notch 8) of testing shall be used instead of an integrated concentration for the calculations in § 92.132 if the concentration response meets either of the criteria of paragraph (b) of this section and the criterion of paragraph (c) of this section.

(2) For CO and CO_2 emissions, a steady-state concentration measurement, measured after 300 seconds (or 840 seconds for notch 8) of testing shall be used. The provisions of paragraphs (b) through (f) of this section do not apply for CO and CO_2 emissions.

(b) (1) The steady-state concentration is considered representative of the entire measurement period if the time-weighted concentration is not more than 10 percent higher than the steady-state concentration. The time-weighted concentration is determined by integrating the concentration response (with respect to time in seconds) over the first 360 seconds (or 900 seconds for notch 8) of measurement, and dividing the area by 360 seconds (or 900 seconds for notch 8).

(2) A steady-state concentration is considered representative of the entire measurement period if the estimated peak area is not more than 10 percent of the product of the steady-state concentration and 360 seconds (or 900 seconds for notch 8). The estimated peak area is calculated as follows, and as shown in Figure B130–1 of this section):

(i) Draw the peak baseline as a straight horizontal line intersecting the steady-state response.

(ii) Measure the peak height from the baseline with the same units as the steady-state concentration; this value is h.

(iii) Bisect the peak height by drawing a straight horizontal line halfway between the top of the peak and the baseline.

(iv) Draw a straight line from the top of the peak to the baseline such that it intersects the response curve at the same point at which the line described in paragraph (b)(2)(iii) of this section intersects the response curve.

(v) Determine the time between the point at which the notch was changed and the point at which the line described in paragraph (b)(2)(iv) of this section intersects the baseline; this value is t.

(vi) The estimated peak area is equal to the product of h and t, divided by 2.

(c) In order to be considered to be a steady-state measurement, a measured response may not vary by more than 5 percent after the first 60 seconds of measurement.

(d) For responses meeting either of the criteria of paragraph (b) of this section, but not meeting the criterion of paragraph (c) of this section, one of the following values shall be used instead of a steady-state or integrated concentration:

(1) The highest value of the response that is measured after the first 60 seconds of measurement (excluding peaks lasting less than 5 seconds, caused by such random events as the cycling of an air compressor); or

(2) The highest 60-second, time-weighted, average concentration of the response after the first 60 seconds of measurement.

(e) For responses not meeting the criterion in paragraph (c) of this section, the Administrator may require that the manufacturer or remanufacturer identify the cause of the variation, and demonstrate that it is not caused by a defeat device.

(f) The integrated concentration used for calculations shall be from the highest continuous 120 seconds of measurement.

(g) Compliance with paragraph (b)(2) of this section does not require calculation where good engineering practice allows compliance to be determined visually (i.e., that the area of the peak is much less than the limits set forth in paragraph (b)(2) of this section).

FIGURE TO § 92.130

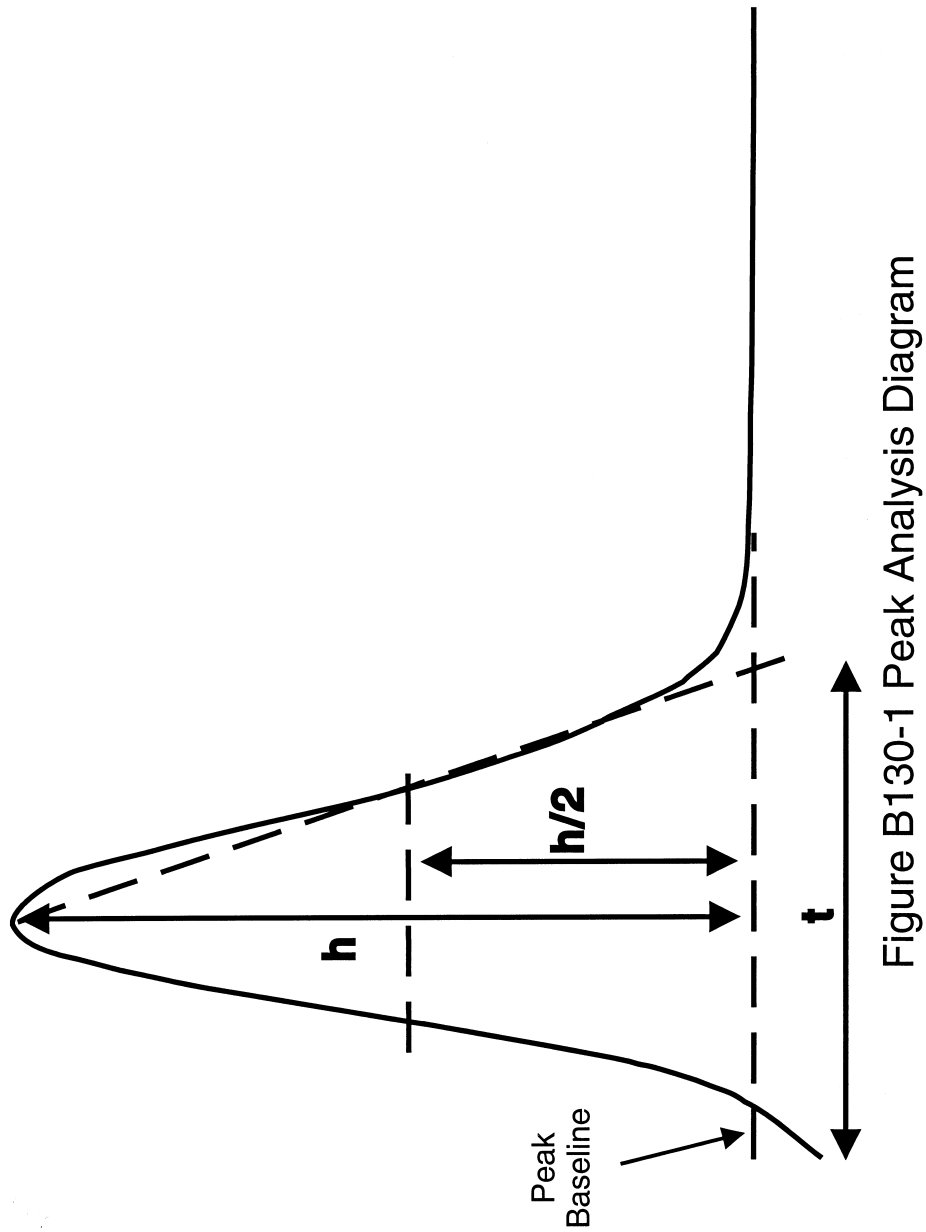

Figure B130-1 Peak Analysis Diagram

§ 92.131 Smoke, data analysis.

The following procedure shall be used to analyze the smoke test data:

(a) Locate each throttle notch test mode, or percent rated power setting test mode. Each test mode starts when

the throttle is placed in the mode and ends when the throttle is moved to the succeeding mode. The start of the first idle mode corresponds to the start of the test sequence.

(b) Analyze the smoke trace by means of the following procedure:

(1) Locate the highest reading, and integrate the highest 3-second average reading around it.

(2) Locate and integrate the highest 30-second average reading.

(3) The ''steady-state'' value is either:

(i) The highest reading occurring more than two minutes after the notch change (excluding peaks lasting less than 5 seconds, caused by such random events as the cycling of an air compressor) if opacity measurements are recorded graphically; or

(ii) The average of the second by second values between 120 and 180 seconds after the notch change if opacity measurements are recorded digitally.

(c)(1) The values determined in paragraph (b) of this section shall be normalized by the following equation:

$$N_n = 100 \times \left[1 - \left[1 - \frac{N_m}{100} \right]^{1/L} \right]$$

Where:

N_n is the normalized percent opacity, N_m is the average measured percent opacity (peak or steady-state), and L is actual distance in meters from the point at which the light beam enters the exhaust plume to the point at which the light beam leaves the exhaust plume.

(2) The normalized opacity values determined in paragraph (c)(1) of this section are the values that are compared to the standards of subpart A of this part for determination of compliance.

(d) This smoke trace analysis may be performed by direct analysis of the recorder traces, or by computer analysis of data collected by automatic data collection equipment.

[63 FR 18998, Apr. 16, 1998, as amended at 70 FR 40455, July 13, 2005]

§ 92.132 Calculations.

(a) *Duty-cycle emissions*. This section describes the calculation of duty-cycle emissions, in terms of grams per brake horsepower hour (g/bhp-hr). The calculation involves the weighted summing of the product of the throttle notch mass emission rates and dividing by the weighted sum of the brake horsepower. The final reported duty-cycle emission test results are calculated as follows:

(1)(i) $E_{idc}=(\Sigma(M_{ij})(F_j))/(\Sigma(BHP_j)(F_j))$

Where:

E_{idc}=Duty-cycle weighted, brake-specific mass emission rate of pollutant i (i.e., HC, CO, NO_X or PM and, if appropriate, THCE or NMHC) in grams per brake horsepower-hour;

M_{ij}=the mass emission rate pollutant i for mode j;

F_j=the applicable weighting factor listed in Table B132–1 for mode j;

BHP_j=the measured brake horsepower for mode j.

(ii) Table B132–1 follows:

TABLE B132–1—WEIGHTING FACTORS FOR CALCULATING EMISSION RATES

Throttle notch setting	Test mode	Locomotive not equipped with multiple idle notches		Locomotive equipped with multiple idle notches	
		Line-haul	Switch	Line-haul	Switch
Low Idle	1a	NA	NA	0.190	0.299
Normal Idle	1	0.380	0.598	0.190	0.299
Dynamic Brake	2	0.125	0.000	0.125	0.000
Notch 1	3	0.065	0.124	0.065	0.124
Notch 2	4	0.065	0.123	0.065	0.123
Notch 3	5	0.052	0.058	0.052	0.058
Notch 4	6	0.044	0.036	0.044	0.036
Notch 5	7	0.038	0.036	0.038	0.036
Notch 6	8	0.039	0.015	0.039	0.015

TABLE B132–1—WEIGHTING FACTORS FOR CALCULATING EMISSION RATES—Continued

Throttle notch setting	Test mode	Locomotive not equipped with multiple idle notches		Locomotive equipped with multiple idle notches	
		Line-haul	Switch	Line-haul	Switch
Notch 7	9	0.030	0.002	0.030	0.002
Notch 8	10	0.162	0.008	0.162	0.008

(2) Example: For the line-haul cycle, for locomotives equipped with normal and low idle, and with dynamic brake, the brake-specific emission rate for HC would be calculated as:

E_{HCdc}=[(M_{HCla}) (0.190)+(M_{HC1}) (0.190)+(M_{HC2}) (0.125)+(M_{HC3}) (0.065)+(M_{HC4}) (0.065)+(M_{HC5}) (0.052)+(M_{HC6}) (0.044)+(M_{HC7}) (0.038)+(M_{HC8}) (0.039)+(M_{HC9}) (0.030)+(M_{HC10}) (0.162)]/[(BHP_{1a}) (0.190)+(BHP_1) (0.190)+(BHP_2) (0.125)+(BHP_3) (0.065)+(BHP_4) (0.065)+(BHP_5) (0.052)+(BHP_6) (0.044)+(BHP_7) (0.038)+(BHP_8) (0.039)+(BHP_9) (0.030)+(BHP_{10}) (0.162)]

(3) In each mode, brake horsepower output is the power that the engine delivers as output (normally at the flywheel), as defined in § 92.2.

(i) For locomotive testing (or engine testing using a locomotive alternator/generator instead of a dynamometer), brake horsepower is calculated as:

$BHP=HP_{out}/A_{eff}+HP_{acc}$

Where:

HP_{out}=Measured horsepower output of the alternator/generator.

A_{eff}=Efficiency of the alternator/generator.

HP_{acc}=Accessory horsepower.

(ii) For engine dynamometer testing, brake horsepower is determined from the engine speed and torque.

(4) For locomotive equipped with features that shut the engine off after prolonged periods of idle, the measured mass emission rate M_{i1} (and M_{i1a} as applicable) shall be multiplied by a factor equal to one minus the estimated fraction reduction in idling time that will result in use from the shutdown feature. Application of this adjustment is subject to the Administrator's approval.

(b) *Throttle notch emissions.* This paragraph (b) describes the calculation of throttle notch emissions for all operating modes, including: idle (normal and low, as applicable); dynamic brake; and traction power points. The throttle notch (operating mode) emission test results, final reported values and values used in paragraph (a)(1) of this section are calculated as follows:

(1) Brake specific emissions (E_{ij}) in grams per brake horsepower-hour of each species i (i.e., HC, CO, NO_X or PM and, if appropriate, THCE or NMHC) for each mode j:

(i) $E_{HC\ mode}$=HC grams/BHP-hr=$M_{HC\ mode}$/Measured BHP in mode.

Where:

$M_{HC\ mode}$=Mass HC emissions (grams per hour) for each test mode.

(ii) $E_{THCE\ mode}$=THCE grams/BHP-hr=$M_{THCE\ mode}$/Measured BHP in mode.

Where:

$M_{THCE\ mode}$ (Total hydrocarbon equivalent mass emissions (grams per hour) for each test mode):

$=M_{HCj}+\Sigma\ (M_{ij})\ (MWC_p)/MWC_i$

M_{ij}=the mass emission rate oxygenated pollutant i for mode j.

MWC_i=the molecular weight of pollutant i divided by the number of carbon atoms per molecule of pollutant i.

MWC_p=the molecular weight of a typical petroleum fuel component divided by the number of carbon atoms per molecule of a typical petroleum fuel component=13.8756.

(iii) $E_{NMHC\ mode}$=NMHC grams/BHP-hr=$M_{NMHC\ mode}$/Measured BHP in mode.

Where:

$M_{NMHC\ mode}$=Mass NMHC emissions (grams per hour) for each test mode.

(iv) $E_{CO\ mode}$=CO grams/BHP-hr=$M_{CO\ mode}$/Measured BHP in mode.

Where:

$M_{CO\ mode}$=Mass CO emissions (grams per hour) for each test mode.

(v) $E_{NOx\ mode}$=NO_X grams/BHP–hr=$M_{NOx\ mode}$/Measured BHP in mode.

Where:

$M_{NOx\ mode}$=Mass NO_X emissions (grams per hour) for each test mode.

(vi) $E_{PM\ mode}$=PM grams/BHP-hr=$M_{PM\ mode}$/Measured BHP in mode.

Where:

$M_{PM\ mode}$=Mass PM emissions (grams per hour) for each test mode.

(vii) $E_{AL\ mode}$=Aldehydes grams/BHP-hr=$M_{AL\ mode}$/Measured BHP in mode.

(vii) $E_{AL\ mode}$=Aldehydes grams/BHP-hr=$M_{AL\ mode}$/Measured BHP in mode.

Where:

$M_{AL\ mode}$=Total aldehyde mass emissions (grams per hour) for each test mode.

(2) Mass Emissions—Raw exhaust measurements. For raw exhaust measurements mass emissions (grams per hour) of each species for each mode:

(i) General equations. (A) The mass emission rate, $M_{X\ mode}$ (g/hr), of each pollutant (HC, NO_X. CO_2, CO, CH_4 CH_3OH, CH_3CH_2OH, CH_2O, CH_3CH_2O) for each operating mode for raw measurements is determined based on one of the following equations:

$$M_{X\ mode}=(DX/10^6)(DVol)(MW_X/V_m)$$
$$M_{X\ mode}=(WX/10^6)(WVol)(MW_X/V_m)$$

Where:

X designates the pollutant (e.g., HC), DX is the concentration of pollutant X (ppm or ppmC) on a dry basis, MW_X is the molecular weight of the pollutant (g/mol), DVol is the total exhaust flow rate (ft^3/hr) on a dry basis, WX is the concentration of pollutant X (ppm or ppmC) on a wet basis, WVol is the total exhaust flow rate (ft^3/hr) on a wet basis, V_m is the volume of one mole of gas at standard temperature and pressure (ft^3/mol).

(B) All measured volumes and volumetric flow rates must be corrected to standard temperature and pressure prior to calculations.

(ii) The following abbreviations and equations apply to this paragraph (b)(2):

α=Atomic hydrogen/carbon ratio of the fuel.
β=Atomic oxygen/carbon ratio of the fuel.
CMW_f=Molecular weight of the fuel per carbon atom, or carbon molecular weight (g/moleC)=$(12.011+1.008\alpha+16.000\beta)$.
DCO=CO concentration in exhaust, ppm (dry).
DCO_2=CO_2 concentration in exhaust, percent (dry).
DHC=HC carbon concentration in exhaust, ppm C (dry).
DNOX=NO_X concentration in exhaust, in ppm (dry).
DVol=Total exhaust flow rate (ft^3/hr) on a dry basis; or
$=(V_m)(W_f)/((CMW_f)\ (DHC/10^6+DCO/10^6+DCO2/100))$.
K=Water gas equilibrium constant=3.5.
K_w=Wet to dry correction factor.
M_F=Mass flow-rate of fuel used in the engine in lb/hr=W_f/453.59.
MW_C=Atomic weight of carbon=12.011.
MW_{CO}=Molecular weight of CO=28.011.
MW_H=Atomic weight of hydrogen=1.008.
MW_{NO2}=Molecular weight of nitrogen dioxide (NO_2)=46.008.
MW_O=Molecular weight of atomic oxygen=16.000.
T=Temperature of inlet air (°F).
V_m=Volume of one mole of gas at standard temperature and pressure (ft^3/mole).
W_f=Mass flow-rate of fuel used in the engine, in grams/hr=(453.59)×(M_f lbs/hr).
WCO_2=CO_2 concentration in exhaust, percent (wet).
WHC=HC concentration in exhaust, ppm C (wet).
WVol=Total exhaust flow rate (ft^3/hr) on a wet basis; or
$=(V_m)(W_f)/((CMW_f)(WHC/10^6+WCO/10^6\ WCO2/100))$.

(iii) Calculation of individual pollutant masses. Calculations for mass emission are shown here in multiple forms. One set of equations is used when sample is analyzed dry (equations where the concentrations are expressed as DX), and the other set is used when the sample is analyzed wet (equations where the concentrations are expressed as WX). When samples are analyzed for some constituents dry and for some constituents wet, the wet concentrations must be converted to dry concentrations, and the equations for dry concentrations used. Also, the equations for HC, NMHC, CO, and NO_X have multiple forms that are algebraically equivalent: An explicit form that requires intermediate calculation of V_m and DVol or WVol; and an implicit form that uses only the concentrations (e.g., DCO) and the mass flow rate of the fuel. For these calculations, either form may be used.

(A) Hydrocarbons and nonmethane hydrocarbons.

(*1*) Hydrocarbons. (*i*) *For petroleum-fueled engines:*

$$M_{HC\ mode}=(DHC)CMW_f(DVol)(10^6)/V_m$$
$$=((DHC/10^6)(W_f)/((DCO/10^6)+(DCO_2/100)+(DHC/10^6)+(\Sigma DX/10^6)))$$
$$M_{HC\ mode}=(WHC)CMW_f(WVol)(10^6)/V_m$$

$=((WHC/10^6)(W_f)/((WCO/10^6)+(WCO_2/100)+(WHC/10^6)+(\Sigma(WX/10^6)))$

(*ii*) *For alcohol-fueled engines:*

$DHC=FID\ HC-\Sigma(r_x)(DX)$
$WHC=FID\ HC-\Sigma(r_x)(WX)$

Where:

FID HC=Concentration of ''hydrocarbon'' plus other organics such as methanol in exhaust as measured by the FID, ppm carbon equivalent.

r_x=FID response to oxygenated species×(methanol, ethanol, or acetaldehyde).

DX=Concentration of oxygenated species×(methanol, ethanol, or acetaldehyde) in exhaust as determined from the dry exhaust sample, ppm carbon (e.g., DCH3OH, 2(DCH3CH2OH)).

WX=Concentration of oxygenated species×(methanol, ethanol, or acetaldehyde) in exhaust as determined from the wet exhaust sample, ppm carbon.

ΣDX=The sum of concentrations DX for all oxygenated species.

ΣWX=The sum of concentrations WX for all oxygenated species.

(*2*) Nonmethane hydrocarbons:

$M_{NMHC\ mode}=(DNMHC)CMW_f(DVol)\ (10^6)/V_m$
$=((DNMHC/10^6)(W_f)/((DCO/10^6)+(DCO_2/100)+(DHC/10^6)))$

$M_{NMHC\ mode}=(WNMHC)CMW_f(WVol)\ (10^6)/V_m$
$=((WNMHC/10^6)(W_f)/((WCO/10^6)+(WCO_2/100)+(WHC/10^6)))$

Where:

$DNMHC=FID\ HC-(r_{CH4})(DCH4)$
$WNMHC=FID\ HC-(r_{CH4})(WCH4)$

FID HC=Concentration of ''hydrocarbon'' plus other organics such as methane in exhaust as measured by the FID, ppm carbon equivalent.

r_{CH4}=FID response to methane.

DCH4=Concentration of methane in exhaust as determined from the dry exhaust sample, ppm.

WCH4=Concentration of methane in exhaust as determined from the wet exhaust sample, ppm.

(B) Carbon monoxide:

$M_{CO\ mode}=(DCO)MW_{CO}(DVol)/10^6/V_m$
$=((MW_{CO}(DCO/10^6)(W_f)/((CMW_f)(DCO/10^6)+(DCO_2/100)+DHC/10^6)+(\Sigma DX/10^6)))$

$M_{CO\ mode}=(WCO)MW_{CO}(DVol)(10^6)/V_m$
$+((MW_{CO}(WCO/10^6)(W_f)/((CMW_f)(WCO/10^6)+(WCO_2/100)+WHC/10^6)+(\Sigma WX/10^6)))$

(C) Oxides of nitrogen:

$M_{NOx\ mode}=(DNOX)MW_{NO2}(DVol)(10^6)/V_m$
$=((MW_{NO2}(DNOX/10^6)(W_f)/((CMW_f)(DCO/10^6)+(DCO_2/100)+(DHC/10^6)+(\Sigma DX/10^6)))$

$M_{NOx\ mode}=(WNOX)MW_{NO2}(DVol)(10^6)/V_m$
$=((MW_{NO2}(WNOX/10^6)(W_f)/((CMW_f)(WCO/10^6)+(WCO_2/100)+(WHC/10^6)+(\Sigma WX/10^6)))$

(D) Methanol:

$M_{CH3OH\ mode}=(DCH3OH/10^6)32.042(DVol)/V_m$

$M_{CH3OH\ mode}=(WCH3OH/10^6)32.042(WVol)/V_m$

Where:

$DCH3OH=(V_m)(10^6)[(C_1\times AV_1)+(C_2\times AV_2)]/DVol_{MS}$.

$WCH3OH=(V_m)(10^6)[(C_1\times AV_1)+(C_2\times AV_2)]/WVol_{MS}$.

C_i=concentration of methanol in impinger i (1 or 2) in mol/ml.

AV_i=Volume of absorbing reagent in impinger i (1 or 2) in ml.

$DVol_{MS}$=Volume (standard ft^3) of exhaust sample drawn through methanol impingers (dry).

$WVol_{MS}$=Volume (standard ft^3) of exhaust sample drawn through methanol impingers (wet).

(E) Ethanol:

$M_{CH3CH2OH\ mode}=(DCH3CH2OH/10^6)23.035(DVol)/V_m$

$M_{CH3CH2OH\ mode}=(WCH3CH2OH/10^6)23.035(WVol)/V_m$

Where:

$DCH3CH2OH=(V_m)(10^6)[(C_1\times AV_1)+(C_2\times AV_2)]/DVol_{ES}$.

$WCH3CH2OH=(V_m)(10^6)[(C_1\times AV_1)+(C_2\times AV_2)]/WVol_{ES}$.

C_i=concentration of ethanol in impinger i (1 or 2) in mol/ml.

AV_i=Volume of absorbing reagent in impinger i (1 or 2) in ml.

$DVol_{ES}$=Volume (standard ft^3) of exhaust sample drawn through ethanol impingers (dry).

$WVol_{ES}$=Volume (standard ft^3) of exhaust sample drawn through ethanol impingers (wet).

(F) Formaldehyde:

$M_{CH2O\ mode}=(DCH2O/10^6)30.026(DVol)/V_m$
$M_{CH2O\ mode}=(WCH2O/10^6)30.026(WVol)/V_m$

(*1*) If aldehydes are measured using impingers:

$DCH2O=(V_m)(10^6)[(C_1\times AV_1)+(C_2\times AV_2)]/DVol_{FS}$

$WCH2O=(V_m)(10^6)[(C_1\times AV_1)+(C_2\times AV_2)]/WVol_{FS}$

(*2*) If aldehydes are measured using cartridges:

$DCH2O=(V_m)(10^6)(C_R \times AV_R)/DVol_{FS}$

$WCH2O=(V_m)(10^6)(C_R \times AV_R)/WVol_{FS}$

(*3*) The following definitions apply to this paragraph (b)(2)(iii)(F):

AV_i=Volume of absorbing reagent in impinger i (1 or 2) in ml.
AV_R=Volume of absorbing reagent use to rinse the cartridge in ml.
C_i=concentration of formaldehyde in impinger i (1 or 2) in mol/ml.
C_R=concentration of formaldehyde in solvent rinse in mol/ml.
$DVol_{FS}$=Volume (standard ft^3) of exhaust sample drawn through formaldehyde sampling system (dry).
$WVol_{FS}$=Volume (standard ft^3) of exhaust sample drawn through formaldehyde sampling system (wet).

(G) Acetaldehyde:

$M_{CH3CHO\ mode}=(DCH3CHO/10^6)27.027(DVol)/V_m$
$M_{CH3CHO\ mode}=(WCH3CHO/10^6)27.027(WVol)/V_m$

(*1*) If aldehydes are measured using impingers:

$DCH3CHO=(V_m)(10^6)[(C_1 \times AV_1)+(C_2 \times AV_2)]/DVol_{AS}$
$WCH3CHO=(V_m)(10^6)[(C_1 \times AV_1)+C_2 \times AV_2)]/WVol_{AS}$

(*2*) If aldehydes are measured using cartridges:

$DCH3CHO=(V_m)(10^6)(C_R \times AV_R)/DVol_{AS}$
$WCH3CHO=(V_m)(10^6)(C_R \times AV_R)/WVol_{AS}$

(*3*) The following definitions apply to this paragraph (b)(2)(iii)(G):

AV_i=Volume of absorbing reagent in impinger i (1 or 2) in ml.
AV_R=Volume of absorbing reagent use to rinse the cartridge in ml.
C_i=concentration of acetaldehyde in impinger i (1 or 2) in mol/ml.
C_R=concentration of acetaldehyde in solvent rinse in mol/ml.
$DVol_{AS}$=Volume (standard ft^3) of exhaust sample drawn through acetaldehyde sampling system (dry).
$WVol_{AS}$=Volume (standard ft^3) of exhaust sample drawn through acetaldehyde sampling system (wet).

(iv) Conversion of wet concentrations to dry concentrations. Wet concentrations are converted to dry concentrations using the following equation:

$DX=K_W\ WX$

Where:

WX is the concentration of species X on a wet basis.
DX is the concentration of species X on a dry basis.
K_W is a conversion factor=WVol/DVol=1+DH2O.

(A) Iterative calculation of conversion factor. The conversion factor K_W is calculated from the fractional volume of water in the exhaust on a dry basis (DH2O=volume of water in exhaust/dry volume of exhaust). Precise calculation of the conversion factor K_W must be done by iteration, since it requires the dry concentration of HC, but HC emissions are measured wet.

(*1*) The conversion factor is calculated by first assuming DHC=WHC to calculate DVol:

$DVol=(V_m)(W_f)/((CMW_f)(DHC/10^6+DCO/10^6+DCO2/100))$

(*2*) This estimate is then used in the following equations to calculate $DVol_{air}$, then DH2O, then K_W, which allows DHC to be determined more accurately from WHC:

$$DH2O=\left[\frac{\alpha\left(\frac{DCO2}{10^2}+\frac{DCO}{10^6}\right)}{2}+\frac{(Y)(DVol_{air})}{DVol}\right]\left[\frac{1}{1+\frac{DCO}{(DCO2)(K)(10^4)}}\right]$$

Where:

Y=Water volume concentration in intake air, volume fraction (dry).
$DVol_{air}$=Air intake flow rate (ft^3/hr) on a dry basis, measured, or calculated as:

$$DVol_{air} = DVol\left[1-\left(\frac{DCO2}{10^2}\right)\left(\frac{\alpha}{4}\right)-\frac{DCO}{10^6}\left(\frac{\alpha}{4}+0.5\right)\right]$$

(*3*) The calculations are repeated using this estimate of DHC. If the new estimate for K_W is not within one percent of the previous estimate, the iteration is repeated until the difference in K_W between iterations is less than one percent.

(B) Alternate calculation of DH2O (approximation). The following approximation may be used for DH2O instead of the calculation in paragraph (b)(2)(iv)(A) of this section:

$$DH2O = \left[\frac{\alpha\left(\frac{DCO2}{10^2}+\frac{DCO}{10^6}\right)}{2}+(Y)\left(DVol_{Ratio}\right)\right]\left[\frac{1}{1+\frac{DCO}{(DCO2)(K)(10^4)}}\right]$$

Where:

$$DVol_{ratio} = \frac{DVol_{air}}{DVol} = \left[1-\left(\frac{DCO2}{10^2}\right)\left(\frac{\alpha}{4}\right)-\frac{DCO}{10^6}\left(\frac{\alpha}{4}+0.5\right)\right]$$

Y=Water volume concentration in intake air, volume fraction (dry).

(3) *Mass Emissions—Dilute exhaust measurements.* For dilute exhaust measurements mass emissions (grams per hour) of each species for each mode:

(i) *General equations.* The mass emission rate, $M_{x\ mode}$ (g/hr) of each pollutant (HC, NO_X. CO2, CO, CH4 CH3OH, CH3CH2OH, CH2O, CH3CH2O) for each operating mode for bag measurements and diesel continuously heated sampling system measurements is determined from the following equation:

$M_{x\ mode}=(V_{mix})(Density_x)(X_{conc})/(V_f)$

Where:

x designates the pollutant (e.g., HC), V_{mix} is the total diluted exhaust volumetric flow rate (ft^3/hr), $Density_x$ is the specified density of the pollutant in the gas phase (g/ft^3), X_{conc} is the fractional concentration of pollutant x (i.e., ppm/10^6, ppmC/10^6, or %/100), and V_f is the fraction of the raw exhaust that is diluted for analysis.

(ii) The following abbreviations and equations apply to paragraphs (b)(3)(i) through (b)(3)(iii)(J) of this section:

(A) DF=Dilution factor, which is the volumetric ratio of the dilution air to the raw exhaust sample for total dilution, calculated as:

$$DF = \frac{WCO2 - WCO2_d}{WCO2_e - WCO2_d} - 1$$

Where:

WCO2=Carbon dioxide concentration of the raw exhaust sample, in percent (wet).

$WCO2_e$=Carbon dioxide concentration of the dilute exhaust sample, in percent (wet).

$WCO2_d$=Carbon dioxide concentration of the dilution air, in percent (wet).

(B) V_{mix}=Diluted exhaust volumetric flow rate in cubic feet per hour corrected to standard conditions (528°R, and 760 mm Hg).

(C) V_f=Fraction of the total raw exhaust that is diluted for analysis.

$$=((CO2_{conc}/10^2)+(CO_{conc}/10^6)+(HC_{conc}/10^6))(V_{mix})(CMW_f)/V_m/M_f$$

(iii) Calculation of individual pollutants.

(A) $M_{HC\ mode}$=Hydrocarbon emissions, in grams per hour by mode, are calculated using the following equations:

$$M_{HC\ mode}=(V_{mix})(Density_{HC})(HC_{conc}/10^6)/V_f$$
$$HC_{conc}=HC_e-(HC_d)(1-(1/DF))$$
$$HC_e=FID\ HC_e-\Xi(r_x)(X_e)$$

Where:

$Density_{HC}$=Density of hydrocarbons=16.42 g/ft³ (0.5800 kg/m₃) for #1 petroleum diesel fuel, 16.27 g/ft³ (0.5746 kg/m₃) for #2 diesel, and 16.33 g/ft³ (0.5767 kg/m³) for other fuels, assuming an average carbon to hydrogen ratio of 1:1.93 for #1 petroleum diesel fuel, 1:1.80 for #2 petroleum diesel fuel, and 1:1.85 for hydrocarbons in other fuels at standard conditions.

HC_{conc}=Hydrocarbon concentration of the dilute exhaust sample corrected for background, in ppm carbon equivalent (i.e., equivalent propane×3).

HC_e=Hydrocarbon concentration of the dilute exhaust bag sample, or for diesel continuous heated sampling systems, average hydrocarbon concentration of the dilute exhaust sample as determined from the integrated HC traces, in ppm carbon equivalent. For petroleum-fueled engines, HC_e is the FID measurement. For methanol-fueled and ethanol-fueled engines:

FID HC_e=Concentration of hydrocarbon plus methanol, ethanol and acetaldehyde in dilute exhaust as measured by the FID, ppm carbon equivalent.

r_x=FID response to oxygenated species x (methanol, ethanol or acetaldehyde).

X_e=Concentration of species x (methanol, ethanol or acetaldehyde) in dilute exhaust as determined from the dilute exhaust sample, ppm carbon.

HC_d=Hydrocarbon concentration of the dilution air as measured, in ppm carbon equivalent.

(B) $M_{NOx\ mode}$ = Oxides of nitrogen emissions, in grams per hour by mode, are calculated using the following equations:

$$M_{NOx\ mode}=(V_{mix})\ (Density_{NO2})\ (NOx_{conc}/10^6)\ /V_f$$
$$NOx_{conc}=(NOx_e-NOx_d(1-(1/DF)))$$

Where:

$Density_{NO2}$=Density of oxides of nitrogen is 54.16 g/ft³ (1.913 kg/m³), assuming they are in the form of nitrogen dioxide, at standard conditions.

NOx_{conc}=Oxides of nitrogen concentration of the dilute exhaust sample corrected for background, in ppm.

NOx_e=Oxides of nitrogen concentration of the dilute exhaust bag sample as measured, in ppm.

NOx_d=Oxides of nitrogen concentration of the dilution air as measured, in ppm.

(C) $M_{CO2\ mode}$=Carbon dioxide emissions, in grams per hour by mode, are calculated using the following equations:

$$M_{CO2\ mode}=(V_{mix})\ (Density_{CO2})\ (CO_{2conc}/10^2)\ /V_f$$
$$CO_{2conc}=CO_2.-CO_2.(1-(1/DF))$$

Where:

Density CO_2=Density of carbon dioxide is 51.81 g/ft³ (1.830 kg/m³), at standard conditions.

CO_{2conc}=Carbon dioxide concentration of the dilute exhaust sample corrected for background, in percent.

CO_2.=Carbon dioxide concentration of the dilute exhaust bag sample, in percent.

CO_2.=Carbon dioxide concentration of the dilution air as measured, in percent.

(D)(*1*) $M_{CO\ mode}$=Carbon monoxide emissions, in grams per hour by mode, are calculated using the following equations:

$$M_{CO\ mode}=(V_{mix})(Density_{CO})(CO_{conc}/10^6)/V_f$$
$$CO_{conc}=CO_e-CO_d(1-(1/DF))$$
$$CO_d=(1-0.000323R)CO_{dm}$$

Where:

$Density_{CO}$=Density of carbon monoxide is 32.97 g/ft³ (1.164 kg/m³), at standard conditions.

CO_{conc}=Carbon monoxide concentration of the dilute exhaust sample corrected for background, water vapor, and CO_2 extraction, ppm.

CO_e=Carbon monoxide concentration of the dilute exhaust sample volume corrected for water vapor and carbon dioxide extraction, in ppm.

$CO_e=(1-(0.01+0.005/\alpha)CO_2.-0.000323RH)CO_{em}$, where α is the hydrogen to carbon ratio as measured for the fuel used.

CO_{em}=Carbon monoxide concentration of the dilute exhaust sample as measured, in ppm.

RH = Relative humidity of the dilution air, percent.

CO_d=Carbon monoxide concentration of the dilution air corrected for water vapor extraction, in ppm.

CO_{dm}=Carbon monoxide concentration of the dilution air sample as measured, in ppm.

(*2*) If a CO instrument that meets the criteria specified in 40 CFR part 1065, subpart C, is used without a sample dryer according to 40 CFR 1065.145, CO_{em} must be substituted directly for CO_e and CO_{dm} must be substituted directly for CO_d.

(E) $M_{CH4\ mode}$=Methane emissions corrected for background, in gram per hour by mode, are calculated using the following equations:

$$M_{CH4\ mode}=(V_{mix})\ (Density_{CH4})\ (CH_{4conc}/10^6)/V_f$$

$$CH_{4conc}=C_{CH4e}-C_{CH4d}(1-(1/DF))$$

Where:

$Density_{CH4}$=Density of methane is 18.89 g/ft^3 at 68 °F (20 °C) and 760 mm Hg (101.3kPa) pressure.

CH_{4conc}=Methane concentration of the dilute exhaust corrected for background, in ppm.

C_{CH4e}=Methane concentration in the dilute exhaust, in ppm.

C_{CH4d}=Methane concentration in the dilution air, in ppm.

(F) $M_{CH3OH\ mode}$=Methanol emissions corrected for background, in gram per hour by mode, are calculated using the following equations:

$$M_{CH3OH\ mode}=(V_{mix})(Density_{CH3OH})\ (CH_3OH_{conc}/10^6)/V_f$$

$$CH3OH_{conc}=C_{CH3OHe}-C_{CH3OHd}(1-(1/DF))$$

$$C_{CH3OHe}=((3.817)(10^{-2})(T_{EM})(((C_{S1})(AV_{S1}))+(C_{S2})\ (AV_{S2})))/((P_B)(V_{EM}))$$

$$C_{CH3OHd}=((3.817)(10^{-2})(T_{DM})(((C_{D1})\ (AV_{D1}))+(C_{D2})\ (AV_{D2})))/((P_B)(V_{DM}))$$

Where:

$Density_{CH3OH}$=Density of methanol is 37.71 g/ft^3 (1.332 kg/m^3), at 68 °F (20 °C) and 760 mm Hg (101.3kPa) pressure.

$CH3OH_{conc}$=Methanol concentration of the dilute exhaust corrected for background, in ppm.

C_{CH3OHe}=Methanol concentration in the dilute exhaust, in ppm.

C^{CH3OHd}=Methanol concentration in the dilution air, in ppm.

T_{EM}=Temperature of methanol sample withdrawn from dilute exhaust, °R.

T_{DM}=Temperature of methanol sample withdrawn from dilution air, °R.

P_B=Barometric pressure during test, mm Hg.

V_{EM}=Volume of methanol sample withdrawn from dilute exhaust, ft^3.

V_{DM}=Volume of methanol sample withdrawn from dilution air, ft^3.

C_S=GC concentration of aqueous sample drawn from dilute exhaust, μg/ml.

C_D=GC concentration of aqueous sample drawn from dilution air, μg/ml.

A_{VS}=Volume of absorbing reagent (deionized water) in impinger through which methanol sample from dilute exhaust is drawn, ml.

A_{VD}=Volume of absorbing reagent (deionized water) in impinger through which methanol sample from dilution air is drawn, ml.

$_1$=first impinger.

$_2$=second impinger.

(G) $M_{C2H5OH\ mode}$=Ethanol emissions corrected for background, in gram per hour by mode, are calculated using the following equations:

$$M_{CH3CH2OH\ mode}=(V_{mix})(Density_{CH3CH2OH})\ ((CH_3CH_2OH_{conc}/10^6))/V_f$$

$$CH_3CH_2OH_{conc}=C_{CH3CH2OHe}-C_{CH3CH2OHd}\ (1-(1/DF))$$

$$C_{CH3CH2OHd}=((2.654)(10^{-2})(T_{DM})(((C_{D1})\ (AV_{D1}))+(C_{D2})(AV_{D2})))/((P_B)(V_{DM}))$$

$$C_{CH3CH2OHe}=((2.654)(10^{-2})(T_{EM})(((C_{S1})\ (AV_{S1}))+(C_{S2})(AV_{S2})))/((P_B)(V_{EM}))$$

Where:

$Density_{C2H5OH}$=Density of ethanol is 54.23 g/ft^3 (1.915 kg/m^3), at 68 °F (20 °C) and 760 mm Hg (101.3kPa) pressure.

$CH_3CH_2OH_{conc}$=Ethanol concentration of the dilute exhaust corrected for background, in ppm.

$C_{CH3CH2OHe}$=Ethanol concentration in the dilute exhaust, in ppm.

$C_{CH3CH2OHd}$=Ethanol concentration in the dilution air, in ppm.

T_{EM}= Temperature of ethanol sample withdrawn from dilute exhaust, °R.

T_{DM}=Temperature of ethanol sample withdrawn from dilution air, °R.

P_B=Barometric pressure during test, mm Hg.

V_{EM}=Volume of ethanol sample withdrawn from dilute exhaust, ft^3.

V_{DM}=Volume of ethanol sample withdrawn from dilution air, ft^3.

C_S=GC concentration of aqueous sample drawn from dilute exhaust, μg/ml.

C_D=GC concentration of aqueous sample drawn from dilution air, μg/ml.

A_{VS}= Volume of absorbing reagent (deionized water) in impinger through which ethanol sample from dilute exhaust is drawn, ml.

A_{VD}=Volume of absorbing reagent (deionized water) in impinger through which ethanol sample from dilution air is drawn, ml.

$_1$=first impinger.

$_2$=second impinger.

(H) $M_{CH2O\ mode}$=Formaldehyde emissions corrected for background, in gram per hour by mode, are calculated using the following equations:

$$M_{CH2O\ mode}=(V_{mix})(Density_{CH2O})\ ((CH_2O_{conc}/10^6)/V_f$$

$$CH2O_{conc}=C_{CH2Oe}-C_{CH2Od}(1-(1/DF))$$

$C_{CH2Oe}=((4.069)(10^{-2})(C_{FDE})(V_{AE})(Q)(T_{EF}))/((V_{SE})(P_B)$

$C_{CH2Od}=((4.069)(10^{-2})(C_{FDA})(V_{AA})(Q)(T_{DF}))/(V_{SA})(P_B)$

Where:

$Density_{CH2O}$=Density of formaldehyde is 35.36 g/ft³ (1.249 kg/m³), at 68 °F (20 °C) and 760 mmHg (101.3 kPa) pressure.

$CH2O_{conc}$=Formaldehyde concentration of the dilute exhaust corrected for background, ppm.

C_{CH2Oe}=Formaldehyde concentration in dilute exhaust, ppm.

C_{CH2Od}=Formaldehyde concentration in dilution air, ppm.

C_{FDE}=Concentration of DNPH derivative of formaldehyde from dilute exhaust sample in sampling solution, μg/ml.

V_{AE}=Volume of sampling solution for dilute exhaust formaldehyde sample, ml.

Q = Ratio of molecular weights of formaldehyde to its DNPH derivative = 0.1429.

T_{EF}=Temperature of formaldehyde sample withdrawn from dilute exhaust, °R.

V_{SE}=Volume of formaldehyde sample withdrawn from dilute exhaust, ft³.

P_B=Barometric pressure during test, mm Hg.

C_{FDA}=Concentration of DNPH derivative of formaldehyde from dilution air sample in sampling solution, μg/ml.

V_{AA}=Volume of sampling solution for dilution air formaldehyde sample, ml.

T_{DF}=Temperature of formaldehyde sample withdrawn from dilution air, °R.

V_{SA}=Volume of formaldehyde sample withdrawn from dilution air, ft³.

(I) $M_{CH3CHO\ mode}$=Acetaldehyde emissions corrected for background, in grams per hour by mode, are calculated using the following equations:

$M_{CH3CHO\ mode}=(V_{mix})(Density_{CH3CHO})((CH_3CHO_{conc}/10^6)/V_f$

$CH3CHO_{conc}=C_{CH3CHOe}-C_{CH3CHOd}(1—(1/DF))$

$C_{CH3CHOe}=((2.774)(10^{-2})(C_{ADE})(V_{AE})(Q)(T_{EF}))/((V_{SE})(P_B)$

$C_{CH3CHOd}=((2.774)(10^{-2})(C_{ADA})(V_{AA})(Q)(T_{DF}))/(V_{SA})(P_B)$

Where:

$Density_{CH3CHO}$=Density of acetaldehyde is 51.88 g/ft³ (1.833 kg/m³), at 68 °F (20 °C) and 760 mmHg (101.3 kPa) pressure.

$CH3CHO_{conc}$=Acetaldehyde concentration of the dilute exhaust corrected for background, ppm.

$C_{CH3CHOe}$=Acetaldehyde concentration in dilute exhaust, ppm.

$C_{CH3CHOd}$=Acetaldehyde concentration in dilution air, ppm.

C_{ADE}=Concentration of DNPH derivative of acetaldehyde from dilute exhaust sample in sampling solution, μg/ml.

V_{AE}=Volume of sampling solution for dilute exhaust acetaldehyde sample, ml.

Q=Ratio of molecular weights of acetaldehyde to its DNPH derivative =0.182

T_{EF}=Temperature of acetaldehyde sample withdrawn from dilute exhaust, °R.

V_{SE}=Volume of acetaldehyde sample withdrawn from dilute exhaust, ft³.

P_B=Barometric pressure during test, mm Hg.

C_{ADA}Concentration of DNPH derivative of acetaldehyde from dilution air sample in sampling solution, μg/ml.

V_{AA}=Volume of sampling solution for dilution air acetaldehyde sample, ml.

T_{DF}=Temperature of acetaldehyde sample withdrawn from dilution air, °R.

V_{SA}=Volume of acetaldehyde sample withdrawn from dilution air, ft³.

(J) $M_{NMHC\ mode}$=Nonmethane hydrocarbon emissions, in grams per hour by mode.

$M_{NMHC\ mode}=(V_{mix})(Density_{NMHC})((NMHCE_{conc}/10^6))/V_f$

$NMHC_{conc}=NMHC_e—(NMHC_d)(1-(1/DF))$

$NMHC_e=FID\ HC_e-(r_m)(C_{CH4e})$

$NMHC_d=FID\ HC_d-(r_m)(C_{CH4d})$

Where:

$Density_{NMHC}$=Density of nonmethane hydrocarbons=16.42 g/ft³ (0.5800 kg/m³) for # 1 petroleum diesel fuel, 16.27 g/ft³ (0.5746 kg/m³) for #2 diesel, and 16.33 for other fuels, assuming an average carbon to hydrogen ratio of 1:1.93 for #1 petroleum diesel fuel, 1:1.80 for #2 petroleum diesel fuel, and 1:1.85 for nonmethane hydrocarbons in other fuels at standard conditions.

$NMHC_{conc}$=Nonmethane hydrocarbon concentration of the dilute exhaust sample corrected for background, in ppm carbon equivalent (i.e., equivalent propane × 3).

$NMHC_e$=Nonmethane hydrocarbon concentration of the dilute exhaust bag sample:

FID HC_e=Concentration of hydrocarbons in dilute exhaust as measured by the FID, ppm carbon equivalent.

rm=FID response to methane.

C_{CH4e}=Concentration of methane in dilute exhaust as determined from the dilute exhaust sample.

$NMHC_d$=Nonmethane hydrocarbon concentration of the dilution air:

FID HC_d=Concentration of hydrocarbons in dilute exhaust as measured by the FID, ppm carbon equivalent.

r_m=FID response to methane.

C_{CH4d}=Concentration of methane in dilute exhaust as determined from the dilute exhaust sample, ppm.

(4) *Particulate exhaust emissions.* The mass of particulate for a test mode determined from the following equations when a heat exchanger is used (i.e., no flow compensation), and when background filters are used to correct for background particulate levels:

$M_{PM\ mode}$=Particulate emissions, grams per hour by mode.

$M_{PM\ mode}=(WVol)(PM_{conc})(1+DF)=(V_{mix})(PM_{conc})/V_f$

$PM_{conc}=PM_e-PM_d(1-(1/DF))$

$PM_e=M_{PMe}/V_{sampe}/10^3$

$PM_d=M_{PMd}/V_{sampd}/10^3$

Where:

PM_{conc}=Particulate concentration of the diluted exhaust sample corrected for background, in g/ft^3

M_{PMe}=Measured mass of particulate for the exhaust sample, in mg, which is the difference in filter mass before and after the test.

M_{PMd}=Measured mass of particulate for the dilution air sample, in mg, which is the difference in filter mass before and after the test.

V_{sampe}=Total wet volume of sample removed from the dilution tunnel for the exhaust particulate measurement, cubic feet at standard conditions.

V_{sampd}=Total wet volume of sample removed from the dilution tunnel for the dilution air particulate measurement, cubic feet at standard conditions.

DF=Dilution factor, which is the volumetric ratio of the dilution air to the raw exhaust sample, calculated as:

$$DF=\frac{WCO2-WCO2_d}{WCO2_e-WCO2_d}-1$$

(c) *Humidity calculations.* (1) The following abbreviations (and units) apply to paragraph (b) of this section:

BARO=barometric pressure (Pa).

H=specific humidity, (g H_2O/g of dry air).

K_H=conversion factor=0.6220 g H_2O/g dry air.

M_{air}=Molecular weight of air=28.9645.

M_{H2O}=Molecular weight of water=18.01534.

P_{DB}=Saturation vapor pressure of water at the dry bulb temperature (Pa).

P_{DP}=Saturation vapor pressure of water at the dewpoint temperature (Pa).

P_v=Partial pressure of water vapor (Pa).

P_{WB}=Saturation vapor pressure of water at the wet bulb temperature (Pa).

T_{DB}=Dry bulb temperature (Kelvin).

T_{WB}=Wet bulb temperature (Kelvin).

Y=Water-vapor volume concentration.

(2) The specific humidity on a dry basis of the intake air (H) is defined as:

$H=((K_H)(P_v)/(BARO-P_v))$

(3) The partial pressure of water vapor may be determined using a dew point device. In that case:

$P_v=P_{DP}$

(4) The percent of relative humidity (RH) is defined as:

$RH=(P_v/P_{DB})100$

(5) The water-vapor volume concentration on a dry basis of the engine intake air (Y) is defined as:

$Y=((H)(M_{air})/(M_{H2O})=P_v/(BARO-P_v)$

(d) *NO_X correction factor.* (1) NO_X emission rates ($M_{NOx\ mode}$) shall be adjusted to account for the effects of humidity and temperature by multiplying each emission rate by K_{NOx}, which is calculated from the following equations:

$K_{NOX} = (K)(1 + (0.25(\log K)^2)^{1/2})$

$K = (K_H)(K_T)$

$K_H = [C_1+C_2\exp((-0.0143)(10.714))]/[C_1+C_2\exp((-0.0143)(1000H))]$

$C_1 = -8.7 +164.5\exp(-0.0218(A/F)_{wet})$

$C_2 = 130.7 + 3941\exp(-0.0248(A/F)_{wet})$

Where:

$(A/F)_{wet}$ = Mass of moist air intake divided by mass of fuel intake.

$K_T = 1/[1 - 0.0107(T_{30} - T_A)]$ for tests conducted at ambient temperatures below 30 °C.

K_T = 1.00 for tests conducted at ambient temperatures at or above 30 °C.

T_{30} = The measured intake manifold air temperature in the locomotive when operated at 30 °C (or 100 °C, where intake manifold air temperature is not available).

T_A = The measured intake manifold air temperature in the locomotive as tested (or

the ambient temperature (°C), where intake manifold air temperature is not available).

(e) *Other calculations.* Calculations other than those specified in this section may be used with the advance approval of the Administrator.

[63 FR 18998, Apr. 16, 1998, as amended at 70 FR 40455, July 13, 2005]

§ 92.133 Required information.

(a) The required test data shall be grouped into the following two general categories:

(1) *Pre-test data.* These data are general test data that must be recorded for each test. The data are of a more descriptive nature such as identification of the test engine, test site number, etc. As such, these data can be recorded at any time within 24 hours of the test.

(2) *Test data.* These data are physical test data that must be recorded at the time of testing.

(b) When requested, data shall be supplied in the format specified by the Administrator.

(c) *Pre-test data.* The following shall be recorded, and reported to the Administrator for each test conducted for compliance with the provisions of this part:

(1) Engine family identification (including subfamily identification, such as for aftertreatment systems).

(2) Locomotive and engine identification, including model, manufacturer and/or remanufacturer, and identification number.

(3) Locomotive and engine parameters, including fuel type, recommended oil type, exhaust configuration and sizes, base injection (ignition) timing, operating temperature, advance/retard injection (ignition) timing controls, recommended start-up and warm-up procedures, alternator generator efficiency curve.

(4) Locomotive or engine and instrument operator(s).

(5) Number of hours of operation accumulated on the locomotive or engine prior to beginning the testing.

(6) Dates of most recent calibrations required by §§ 92.115–92.122.

(7) All pertinent instrument information such as tuning (as applicable), gain, serial numbers, detector number, calibration curve number, etc. As long as this information is traceable, it may be summarized by system or analyzer identification numbers.

(8) A description of the exhaust duct and sample probes, including dimensions and locations.

(d) Test data. The physical parameters necessary to compute the test results and ensure accuracy of the results shall be recorded for each test conducted for compliance with the provisions of this part. Additional test data may be recorded at the discretion of the manufacturer or remanufacturer. Extreme details of the test measurements such as analyzer chart deflections will generally not be required on a routine basis to be reported to the Administrator for each test, unless a dispute about the accuracy of the data arises. The following types of data shall be required to be reported to the Administrator. The applicable Application Format for Certification will specify the exact requirements which may change slightly from year to year with the addition or deletion of certain items.

(1) Date and time of day.

(2) Test number.

(3) Engine intake air and test cell (or ambient, as applicable) temperature.

(4) For each test point, the temperature of air entering the engine after compression and cooling in the charge air cooler(s). If testing is not performed on a locomotive, the corresponding temperatures when the engine is in operation in a locomotive at ambient conditions represented by the test.

(5) Barometric pressure. (A central laboratory barometer may be used: Provided, that individual test cell barometric pressures are shown to be within ±0.1 percent of the barometric pressure at the central barometer location.)

(6) Engine intake and test cell dilution air humidity.

(7) Measured horsepower and engine speed for each test mode.

(8) Identification and specifications of test fuel used.

(9) Measured fuel consumption rate at maximum power.

(10) Temperature set point of the heated continuous analysis system components (if applicable).

(11) All measured flow rates, dilution factor, and fraction of exhaust diluted for diluted exhaust measurements (as applicable) for each test mode.

(12) Temperature of the dilute exhaust mixture at the inlet to the respective gas meter(s) or flow instrumentation used for particulate sampling.

(13) The maximum temperature of the dilute exhaust mixture immediately ahead of the particulate filter.

(14) Sample concentrations (background corrected as applicable) for HC, CO, CO_2, and NO_X (and methane, NMHC, alcohols and aldehydes, as applicable) for each test mode. This includes the continuous trace and the steady-state value (or integrated value where required).

(15) The stabilized pre-test weight and post-test weight of each particulate sample and back-up filter or pair of filters.

(16) Brake specific emissions (g/BHP-hr) for HC, CO, NO_X. particulate and, if applicable, CH3, NMHC, THCE, CH_3OH, CH3CH2OH, CH2O and CH3CHO for each test mode.

(17) The weighted brake specific emissions for HC, CO, NO_X and particulate (g/BHP-hr) for the total test for the duty-cycle(s) applicable to the locomotive.

(18) The smoke opacity for each test mode. This includes the continuous trace, the peak values and the steady-state value.

EFFECTIVE DATE NOTE: At 63 FR 19044, Apr. 16, 1998, § 92.133 was added. This section contains information collection and recordkeeping requirements and will not become effective until approval has been given by the Office of Management and Budget.

Subpart C—Certification Provisions

§ 92.201 Applicability.

The requirements of this subpart are applicable to manufacturers and remanufacturers of any locomotives and locomotive engines subject to the provisions of subpart A of this part.

§ 92.202 Definitions.

The definitions of subpart A of this part apply to this subpart.

§ 92.203 Application for certification.

(a) For each engine family that complies with all applicable standards and requirements, the manufacturer or remanufacturer must submit to the Administrator a completed application for a certificate of conformity.

(b) The application must be approved and signed by the authorized representative of the manufacturer or remanufacturer.

(c) The application will be updated and corrected by amendment as provided for in § 92.210 to accurately reflect the manufacturer's or remanufacturer's production.

(d) *Required content.* Each application must include the following information:

(1)(i) A description of the basic engine design including, but not limited to, the engine family specifications, the provisions of which are contained in § 92.204;

(ii)(A) For freshly manufactured locomotives, a description of the basic locomotive design;

(B) For freshly manufactured engines for use in remanufactured locomotives, a description of the locomotive designs in which the engines are to be used;

(C) For remanufactured locomotives, a description of the basic locomotive designs to which the remanufacture system will be applied;

(iii) A list of distinguishable configurations to be included in the engine family;

(2) An explanation of how the emission control system operates, including detailed descriptions of:

(i) All emission control system components;

(ii) Injection or ignition timing for each notch (i.e., degrees before or after top-dead-center), and any functional dependence of such timing on other operational parameters (e.g., engine coolant temperature);

(iii) Each auxiliary emission control device (AECD); and

(iv) All fuel system components to be installed on any production or test locomotive(s) or engine(s);

(3) A description of the test locomotive or engine;

(4) Special or alternate test procedures, if applicable;

(5) A description of the operating cycle and the period of operation necessary to accumulate service hours on the test locomotive or engine and stabilize emission levels;

(6) A description of all adjustable operating parameters (including, but not limited to, injection timing and fuel rate), including the following:

(i) The nominal or recommended setting and the associated production tolerances;

(ii) The intended adjustable range, and the physically adjustable range;

(iii) The limits or stops used to limit adjustable ranges;

(iv) Production tolerances of the limits or stops used to establish each physically adjustable range; and

(v) Information relating to why the physical limits or stops used to establish the physically adjustable range of each parameter, or any other means used to inhibit adjustment, are the most effective means possible of preventing adjustment of parameters to settings outside the manufacturer's or remanufacturer's specified adjustable ranges on in-use engines;

(7) For families participating in the averaging, banking, and trading program, the information specified in subpart D of this part;

(8) Projected U.S. production information for each configuration;

(9) A description of the test equipment and fuel proposed to be used;

(10) All test data obtained by the manufacturer or remanufacturer on each test engine or locomotive;

(11) The intended useful life period for the engine family, in accordance with § 92.9(a);

(12) The intended deterioration factors for the engine family, in accordance with § 92.9(b)(2);

(13) An unconditional statement certifying that all locomotives and engines included the engine family comply with all requirements of this part and the Clean Air Act.

(e) At the Administrator's request, the manufacturer or remanufacturer must supply such additional information as may be required to evaluate the application.

(f)(1) If the manufacturer or remanufacturer, submits some or all of the information specified in paragraph (d) of this section in advance of its full application for certification, the Administrator shall review the information and make the determinations required in § 92.208(d) within 90 days of the manufacturer's or remanufacturer's submittal.

(2) The 90-day decision period is exclusive of any elapsed time during which EPA is waiting for additional information requested from a manufacturer or remanufacturer regarding an adjustable parameter (the 90-day period resumes upon receipt of the manufacturer's or remanufacturer's response). For example, if EPA requests additional information 30 days after the manufacturer or remanufacturer submits information under paragraph (f)(1) of this section, then the Administrator would make a determination within 60 days of the receipt of the requested information from the manufacturer or remanufacturer.

(g)(1) The Administrator may modify the information submission requirements of paragraph (d) of this section, provided that all of the information specified therein is maintained by the manufacturer or remanufacturer as required by § 92.215, and amended, updated, or corrected as necessary.

(2) For the purposes of this paragraph (g), § 92.215 includes all information specified in paragraph (d) of this section whether or not such information is actually submitted to the Administrator for any particular model year.

(3) The Administrator may review a manufacturer's or remanufacturer's records at any time. At the Administrator's discretion, this review may take place either at the manufacturer's or remanufacturer's facility or at another facility designated by the Administrator.

[63 FR 18998, Apr. 16, 1998, as amended at 70 FR 40455, July 13, 2005]

§ 92.204 Designation of engine families.

This section specifies the procedure and requirements for grouping of engines into engine families.

(a) Manufacturers and remanufacturers shall divide their locomotives and locomotive engines into groupings of locomotives and locomotive engines which are expected to have similar emission characteristics throughout

their useful life. Each group shall be defined as a separate engine family. Freshly manufactured locomotives may not be included in the same engine family as remanufactured locomotives. Freshly manufactured engines may be included in the same engine family as remanufactured locomotives, provided such engines are used as replacement engines for locomotive models included in the engine family.

(b) For Tier 1 and Tier 2 locomotives and locomotive engines, the following characteristics distinguish engine families:

(1) The combustion cycle (e.g., diesel cycle);

(2) The type of engine cooling employed (air-cooled or water-cooled), and procedure(s) employed to maintain engine temperature within desired limits (thermostat, on-off radiator fan(s), radiator shutters, etc.);

(3) The bore and stroke dimensions;

(4) The approximate intake and exhaust event timing and duration (valve or port);

(5) The location of the intake and exhaust valves (or ports);

(6) The size of the intake and exhaust valves (or ports);

(7) The overall injection, or as appropriate ignition, timing characteristics (i.e., the deviation of the timing curves from the optimal fuel economy timing curve must be similar in degree);

(8) The combustion chamber configuration and the surface-to-volume ratio of the combustion chamber when the piston is at top dead center position, using nominal combustion chamber dimensions;

(9) The location of the piston rings on the piston;

(10) The method of air aspiration (turbocharged, supercharged, naturally aspirated, Roots blown);

(11) The turbocharger or supercharger general performance characteristics (e.g., approximate boost pressure, approximate response time, approximate size relative to engine displacement);

(12) The type of air inlet cooler (air-to-air, air-to-liquid, approximate degree to which inlet air is cooled);

(13) The intake manifold induction port size and configuration;

(14) The type of fuel and fuel system configuration;

(15) The configuration of the fuel injectors and approximate injection pressure;

(16) The type of fuel injection system controls (i.e., mechanical or electronic);

(17) The type of smoke control system;

(18) The exhaust manifold port size and configuration; and

(19) The type of exhaust aftertreatment system (oxidation catalyst, particulate trap), and characteristics of the aftertreatment system (catalyst loading, converter size vs engine size).

(c) For Tier 0 locomotives and locomotive engines, the following characteristics distinguish engine families:

(1) The combustion cycle (e.g., diesel cycle);

(2) The type of engine cooling employed (air-cooled or water-cooled), and procedure(s) employed to maintain engine temperature within desired limits (thermostat, on-off radiator fan(s), radiator shutters, etc.);

(3) The approximate bore and stroke dimensions;

(4) The approximate location of the intake and exhaust valves (or ports);

(5) The combustion chamber general configuration and the approximate surface-to-volume ratio of the combustion chamber when the piston is at top dead center position, using nominal combustion chamber dimensions;

(6) The method of air aspiration (turbocharged, supercharged, naturally aspirated, Roots blown);

(7) The type of air inlet cooler (air-to-air, air-to-liquid, approximate degree to which inlet air is cooled);

(8) The type of fuel and general fuel system configuration;

(9) The general configuration of the fuel injectors and approximate injection pressure; and

(10) The fuel injection system control type (electronic or mechanical).

(d) Upon request by the manufacturer or remanufacturer, locomotives or locomotive engines that are eligible to be included in the same engine family based on the criteria in paragraph (b) or (c) of this section may be divided

into different engine families. This request must be accompanied by information the manufacturer or remanufacturer believes supports the addition of these different engine families. For the purposes of determining whether an engine family is a small engine family in § 92.603(a)(2), EPA will consider the number of locomotives or locomotive engines that could have been classed together under paragraph (b) or (c) of this section, instead of the number of locomotives or locomotive engines that are included in a subdivision allowed by this paragraph (d).

(e) Upon request by the manufacturer or remanufacturer, the Administrator may allow locomotives or locomotive engines that would be required to be grouped into separate engine families based on the criteria in paragraph (b) or (c) of this section to be grouped into a single engine family if the manufacturer or remanufacturer demonstrates that similar emission characteristics will occur. This request must be accompanied by emission information supporting the appropriateness of such combined engine families.

(f) Remanufactured Tier 2 locomotives may be included in the same engine family as freshly manufactured Tier 2 locomotives, provided such engines are used for locomotive models included in the engine family.

[63 FR 18998, Apr. 16, 1998, as amended at 70 FR 40455, July 13, 2005; 73 FR 37195, June 30, 2008]

§ 92.205 Prohibited controls, adjustable parameters.

(a) Any system installed on, or incorporated in, a new locomotive or new locomotive engine to enable such locomotive or locomotive engine to conform to standards contained in this part:

(1) Shall not in its operation or function cause significant (as determined by the Administrator) emission into the ambient air of any noxious or toxic substance that would not be emitted in the operation of such locomotive, or locomotive engine, without such system, except as specifically permitted by regulation;

(2) Shall not in its operation, function or malfunction result in any unsafe condition endangering the locomotive, its operators, riders or property on a train, or persons or property in close proximity to the locomotive; and

(3) Shall function during all in-use operation except as otherwise allowed by this part.

(b) In specifying the adjustable range of each adjustable parameter on a new locomotive or new locomotive engine, the manufacturer or remanufacturer, shall:

(1) Ensure that safe locomotive operating characteristics are available within that range, as required by section 202(a)(4) of the Clean Air Act, taking into consideration the production tolerances; and

(2) To the maximum extent practicable, limit the physical range of adjustability to that which is necessary for proper operation of the locomotive or locomotive engine.

[63 FR 18998, Apr. 16, 1998, as amended at 70 FR 40455, July 13, 2005]

§ 92.206 Required information.

(a) The manufacturer or remanufacturer shall perform the tests required by the applicable test procedures, and submit to the Administrator the information required by this section: Provided, however, that if requested by the manufacturer or remanufacturer, the Administrator may waive any requirement of this section for testing of locomotives, or locomotive engines, for which the required emission data are otherwise available.

(b) Exhaust emission deterioration factors, with supporting data. The determination of the deterioration factors shall be conducted in accordance with good engineering practice to assure that the locomotives or locomotive engines covered by a certificate issued under § 92.208 will meet the emission standards in § 92.8, in actual use for the useful life of the locomotive or locomotive engine.

(c) Emission data, including exhaust methane data in the case of locomotives or locomotive engines subject to a non-methane hydrocarbon standard, on such locomotives or locomotive engines tested in accordance with applicable test procedures of subpart B of this part. These data shall include zero

hour data, if generated. In lieu of providing the emission data required by paragraph (a) of this section, the Administrator may, upon request of the manufacturer or remanufacturer, allow the manufacturer or remanufacturer to demonstrate (on the basis of previous emission tests, development tests, or other testing information) that the engine or locomotive will conform with the applicable emission standards of § 92.8. The requirement to measure smoke emissions is waived for certification and production line testing of Tier 2 locomotives, except where there is reason to believe the locomotives do not meet the applicable smoke standards.

(d) A statement that the locomotives and locomotive engines, for which certification is requested conform to the requirements in § 92.7, and that the descriptions of tests performed to ascertain compliance with the general standards in § 92.7, and the data derived from such tests, are available to the Administrator upon request.

(e) A statement that the locomotive, or locomotive engine, with respect to which data are submitted to demonstrate compliance with the applicable standards of this subpart, is in all material respects as described in the manufacturer's or remanufacturer's application for certification; that it has been tested in accordance with the applicable test procedures utilizing the fuels and equipment described in the application for certification; and that on the basis of such tests, the engine family conforms to the requirements of this part. If, on the basis of the data supplied and any additional data as required by the Administrator, the Administrator determines that the test locomotive, or test engine, was not as described in the application for certification or was not tested in accordance with the applicable test procedures utilizing the fuels and equipment as described in the application for certification, the Administrator may make the determination that the locomotive, or engine, does not meet the applicable standards. If the Administrator makes such a determination, he/she may withhold, suspend, or revoke the certificate of conformity under § 92.208(c)(3)(i).

[63 FR 18998, Apr. 16, 1998, as amended at 73 FR 37195, June 30, 2008]

§ 92.207 Special test procedures.

(a) *Establishment of special test procedures by EPA.* The Administrator may, on the basis of written application by a manufacturer or remanufacturer, establish special test procedures other than those set forth in this part, for any locomotive or locomotive engine that the Administrator determines is not susceptible to satisfactory testing under the specified test procedures set forth in subpart B of this part.

(b) *Use of alternate test procedures by manufacturer or remanufacturer.* (1) A manufacturer or remanufacturer may elect to use an alternate test procedure provided that it is equivalent to the specified procedures with respect to the demonstration of compliance, its use is approved in advance by the Administrator, and the basis for the equivalence with the specified test procedures is fully described in the manufacturer's or remanufacturer's application.

(2) The Administrator may reject data generated under alternate test procedures which do not correlate with data generated under the specified procedures.

§ 92.208 Certification.

(a) This paragraph (a) applies to manufacturers of new locomotives and new locomotive engines. If, after a review of the application for certification, test reports and data acquired from a freshly manufactured locomotive or locomotive engine or from a development data engine, and any other information required or obtained by EPA, the Administrator determines that the application is complete and that the engine family meets the requirements of the Act and this part, he/she will issue a certificate of conformity with respect to such engine family except as provided by paragraph (c)(3) of this section. The certificate of conformity is valid for each engine family starting with the indicated effective date, but it is not valid for any production after December 31 of the model year for which it is issued (except as specified in § 92.12). The certificate of conformity

is valid upon such terms and conditions as the Administrator deems necessary or appropriate to ensure that the production engines covered by the certificate will meet the requirements of the Act and of this part.

(b) This paragraph (b) applies to remanufacturers of locomotives and locomotive engines. If, after a review of the application for certification, test reports and data acquired from a remanufactured locomotive or locomotive engine or from a development data engine, and any other information required or obtained by EPA, the Administrator determines that the engine family meets the requirements of the Act and of this subpart, he/she will issue a certificate of conformity with respect to such engine family except as provided by paragraph (c)(3) of this section. The certificate of conformity is valid for each engine family from the date of issuance by EPA until 31 December of the model year or calendar year for which it is issued and upon such terms and conditions as the Administrator deems necessary or appropriate to assure that the production locomotives or engines covered by the certificate will meet the requirements of the Act and of this part.

(c) This paragraph (c) applies to manufacturers and remanufacturers of locomotives and locomotive engines.

(1) The manufacturer or remanufacturer shall bear the burden of establishing to the satisfaction of the Administrator that the conditions upon which the certificates were issued were satisfied or excused.

(2) The Administrator will determine whether the test data included in the application represents all locomotives or locomotive engines of the engine family.

(3) Notwithstanding the fact that any locomotive(s) or locomotive engine(s) may comply with other provisions of this subpart, the Administrator may withhold or deny the issuance of any certificate of conformity, or suspend or revoke any such certificate(s) which has (have) been issued with respect to any such locomotive(s) or locomotive engine(s) if:

(i) The manufacturer or remanufacturer submits false or incomplete information in its application for certification thereof;

(ii) The manufacturer or remanufacturer renders inaccurate any test data which it submits pertaining thereto or otherwise circumvents the intent of the Act, or of this part with respect to such locomotive or locomotive engine;

(iii) Any EPA Enforcement Officer is denied access on the terms specified in § 92.215 to any facility or portion thereof which contains any of the following:

(A) A locomotive or locomotive engine which is scheduled to undergo emissions testing, or which is undergoing emissions testing, or which has undergone emissions testing; or

(B) Any components used or considered for use in the construction, modification or buildup of any locomotive or locomotive engine which is scheduled to undergo emissions testing, or which is undergoing emissions testing, or which has undergone emissions testing for purposes of emissions certification; or

(C) Any production locomotive or production locomotive engine which is or will be claimed by the manufacturer or remanufacturer to be covered by the certificate; or

(D) Any step in the construction of a locomotive or locomotive engine, where such step may reasonably be expected to have an effect on emissions; or

(E) Any records, documents, reports or histories required by this part to be kept concerning any of the items listed in paragraphs (c)(3)(iii)(A) through (D).

(iv) Any EPA Enforcement Officer is denied ''reasonable assistance'' (as defined in § 92.215).

(4) In any case in which a manufacturer or remanufacturer knowingly submits false or inaccurate information or knowingly renders inaccurate or invalid any test data or commits any other fraudulent acts and such acts contribute substantially to the Administrator's decision to issue a certificate of conformity, the Administrator may deem such certificate void *ab initio*.

(5) In any case in which certification of a locomotive or locomotive engine is to be withheld, denied, revoked or suspended under paragraph (c)(3) of this

section, and in which the Administrator has presented to the manufacturer or remanufacturer involved reasonable evidence that a violation of § 92.215 in fact occurred, the manufacturer or remanufacturer, if it wishes to contend that, even though the violation occurred, the locomotive or locomotive engine in question was not involved in the violation to a degree that would warrant withholding, denial, revocation or suspension of certification under paragraph (c)(3) of this section, shall have the burden of establishing that contention to the satisfaction of the Administrator.

(6) Any revocation, suspension, or voiding of certification under paragraph (c)(3) of this section shall:

(i) Be made only after the manufacturer or remanufacturer concerned has been offered an opportunity for a hearing conducted in accordance with § 92.216; and

(ii) Extend no further than to forbid the introduction into commerce of locomotives or locomotive engines previously covered by the certification which are still in the hands of the manufacturer or remanufacturer, except in cases of such fraud or other misconduct that makes the certification invalid *ab initio*.

(7) The manufacturer or remanufacturer may request, within 30 days of receiving notification, that any determination made by the Administrator under paragraph (c)(3) of this section to withhold or deny certification be reviewed in a hearing conducted in accordance with § 92.216. The request shall be in writing, signed by an authorized representative of the manufacturer or remanufacturer as applicable, and shall include a statement specifying the manufacturer's or remanufacturer's objections to the Administrator's determinations, and data in support of such objections. If the Administrator finds, after a review of the request and supporting data, that the request raises a substantial factual issue, he/she will grant the request with respect to such issue.

(d) In approving an application for certification, the Administrator may specify:

(1) A broader range of adjustability than recommended by the manufacturer or remanufacturer for those locomotive or engine parameters which are to be subject to adjustment, if the Administrator determines that it will not be practical to keep the parameter adjusted within the recommended range in use;

(2) A longer useful life period, if the Administrator determines that the useful life of the locomotives and locomotive engines in the engine family, as defined in § 92.2, is longer than the period specified by the manufacturer or remanufacturer; and/or

(3) Larger deterioration factors, if the Administrator determines that the deterioration factors specified by the manufacturer or remanufacturer do not meet the requirements of § 92.9(b)(2)(iv).

(e) Within 30 days following receipt of notification of the Administrator's determinations made under paragraph (d) of this section, the manufacturer or remanufacturer may request a hearing on the Administrator's determinations. The request shall be in writing, signed by an authorized representative of the manufacturer or remanufacturer as applicable, and shall include a statement specifying the manufacturer's or remanufacturer's objections to the Administrator's determinations, and data in support of such objections. If, after review of the request and supporting data, the Administrator finds that the request raises a substantial factual issue, the manufacturer or remanufacturer shall be provided with a hearing in accordance with § 92.216 with respect to such issue.

[63 FR 18998, Apr. 16, 1998, as amended at 70 FR 40455, July 13, 2005; 73 FR 37195, June 30, 2008]

§ 92.209 Certification with multiple manufacturers or remanufacturers.

(a) Where there are multiple persons meeting the definition of manufacturer or remanufacturer, each such person must comply with the requirements of this part that apply to manufacturers or remanufacturers. However, if one person complies with a requirement, then all such persons will be deemed to have complied with that specific requirement.

(b) Where more than one entity meets the definition of manufacturer

or remanufacturer for a particular locomotive or locomotive engine, and any one of the manufacturers or remanufacturers obtains a certificate of conformity covering such locomotive or locomotive engine, the requirements of subparts C, D, F, and G of this part shall apply to the manufacturer or remanufacturer that obtains the certificate of conformity. Other manufacturers or remanufacturers are required to comply with the requirements of subparts C, D, F, and G of this part only when notified by the Administrator. Such notification by the Administrator shall specify a reasonable time period in which the manufacturer or remanufacturer shall comply with the requirements identified in the notice.

§ 92.210 Amending the application and certificate of conformity.

(a) The manufacturer or remanufacturer of locomotives or locomotive engines must notify the Administrator when changes to information required to be described in the application for certification are to be made to a product line covered by a certificate of conformity. This notification must include a request to amend the application or the existing certificate of conformity. Except as provided in paragraph (e) of this section, no manufacturer or remanufacturer shall make said changes or produce said locomotives or engines prior to receiving approval from EPA.

(b) A manufacturer's or remanufacturer's request to amend the application or the existing certificate of conformity shall include the following information:

(1) A full description of the change to be made in production, or of the locomotives or engines to be added;

(2) Engineering evaluations or data showing that the locomotives or engines as modified or added will comply with all applicable emission standards; and

(3) A determination whether the manufacturer's or remanufacturer's original test fleet selection is still appropriate, and if the original test fleet selection is determined not to be appropriate, test fleet selection(s) representing the locomotives or engines changed or added which would have been required if the locomotives or engines had been included in the original application for certification.

(c) The Administrator may require the manufacturer or remanufacturer to perform tests on the locomotive or engine representing the locomotive or engine to be added or changed.

(d) *Decision by Administrator*. (1) Based on the description of the amendment and data derived from such testing as the Administrator may require or conduct, the Administrator will determine whether the change or addition would still be covered by the certificate of conformity then in effect.

(2) If the Administrator determines that the change or new locomotive(s) or engine(s) meets the requirements of this part and the Act, the appropriate certificate of conformity shall be amended.

(3) If the Administrator determines that the changed or new locomotive(s) or engine(s) does not meet the requirements of this part and the Act, the certificate of conformity will not be amended. The Administrator shall provide a written explanation to the manufacturer or remanufacturer of the decision not to amend the certificate. The manufacturer or remanufacturer may request a hearing on a denial.

(e) A manufacturer or remanufacturer may make changes in or additions to production locomotives or engines concurrently with the notification to the Administrator as required by paragraph (a) of this section, if the manufacturer or remanufacturer complies with the following requirements:

(1) In addition to the information required in paragraph (b) of this section, the manufacturer or remanufacturer must supply supporting documentation, test data, and engineering evaluations as appropriate to demonstrate that all affected locomotives and engines will still meet applicable emission standards.

(2) If, after a review, the Administrator determines additional testing is required, the manufacturer or remanufacturer must provide required test data within 30 days or cease production of the affected locomotives or engines.

(3) If the Administrator determines that the affected locomotives or engines do not meet applicable requirements, the Administrator will notify

the manufacturer or remanufacturer to cease production of the affected locomotives or engines and to recall and correct at no expense to the owner all affected locomotives or engines previously produced.

(4) Election to produce locomotives or engines under this paragraph will be deemed to be a consent to recall all locomotives or engines which the Administrator determines do not meet applicable standards and to cause such nonconformity to be remedied at no expense to the owner.

[63 FR 18998, Apr. 16, 1998, as amended at 70 FR 40455, July 13, 2005]

§ 92.211 Emission-related maintenance instructions for purchasers.

(a) The manufacturer or remanufacturer shall furnish or cause to be furnished to the ultimate purchaser or owner of each new locomotive, or new locomotive engine, subject to the standards prescribed in § 92.8, written instructions for the proper maintenance and use of the locomotive, or locomotive engine, as are reasonable and necessary to assure the proper functioning of the emissions control system, consistent with the applicable provisions of paragraph (b) of this section.

(1) The maintenance and use instructions required by this section shall be clear and easily understandable.

(2) The maintenance instructions required by this section shall contain a general description of the documentation which would demonstrate that the ultimate purchaser or any subsequent owner had complied with the instructions.

(b)(1) The manufacturer or remanufacturer must provide in boldface type on the first page of the written maintenance instructions notice that maintenance, replacement, or repair of the emission control devices and systems may be performed by any locomotive or locomotive engine repair establishment or individual.

(2) The instructions under paragraph (b)(1) of this section will not include any condition on the ultimate purchaser's or owner's using, in connection with such locomotive or locomotive engine, any component or service (other than a component or service provided without charge under the terms of the purchase agreement) which is identified by brand, trade, or corporate name. Such instructions also will not directly or indirectly distinguish between service performed by any other service establishments with which such manufacturer or remanufacturer has a commercial relationship and service performed by independent locomotive or locomotive engine repair facilities which such manufacturer or remanufacturer has no commercial relationship.

(3) The prohibition of paragraph (b)(2) of this section may be waived by the Administrator if:

(i) The manufacturer or remanufacturer satisfies the Administrator that the locomotive or locomotive engine will function properly only if the component or service so identified is used in connection with such locomotive or locomotive engine; and

(ii) The Administrator finds that such a waiver is in the public interest.

(c) The manufacturer or remanufacturer shall provide to the Administrator, no later than the time of the submission required by § 92.203, a copy of the emission-related maintenance instructions which the manufacturer or remanufacturer proposes to supply to the ultimate purchaser or owner in accordance with this section. The Administrator will review such instructions to determine whether they are reasonable and necessary to assure the proper functioning of the locomotive's, or locomotive engine's emission control systems. If the Administrator determines that such instructions are not reasonable and necessary to assure the proper functioning of the emission control systems, he/she may disapprove the application for certification, or may require that the manufacturer or remanufacturer modify the instructions.

(d) Any revision to the maintenance instructions which will affect emissions shall be supplied to the Administrator at least 30 days before being supplied to the ultimate purchaser or owner unless the Administrator consents to a lesser period of time, and is subject to the provisions of § 92.210.

§ 92.212 Labeling.

(a) *General requirements*. Each new locomotive and new locomotive engine, subject to the emission standards of this part and covered by a certificate of conformity under § 92.208, shall be labeled by the manufacturer or remanufacturer in the manner described in this section at the time of manufacture or remanufacture.

(b) *Locomotive labels*. (1) Locomotive labels meeting the specifications of paragraph (b)(2) of this section shall be applied by:

(i) The manufacturer at the point of original manufacture; and

(ii) The remanufacturer at the point of original remanufacture; and

(iii) Any remanufacturer certifying a locomotive or locomotive engine to an FEL different from the last FEL or standard to which the locomotive was previously certified.

(2)(i) Locomotive labels shall be permanent and legible and shall be affixed to the locomotive in a position in which it will remain readily visible.

(ii) The label shall be attached to a locomotive chassis part necessary for normal operation and not normally requiring replacement during the service life of the locomotive. This label may not be attached to the engine.

(iii) The label shall be affixed by the manufacturer or remanufacturer, in such manner that it cannot be removed without destroying or defacing the label. The label shall not be affixed to any equipment which is easily detached from such locomotive.

(iv) The label may be made up of more than one piece permanently attached to the same locomotive part, except for Tier 0 locomotives, where you may attach it to separate parts.

(v) The label shall contain the following information lettered in the English language in block letters and numerals, which shall be of a color that contrasts with the background of the label:

(A) The label heading: Original Locomotive Emission Control Information. Manufacturers and remanufacturers may add a subheading to distinguish this label from the engine label described in paragraph (c) of this section.

(B) Full corporate name and trademark of the manufacturer or remanufacturer.

(C) Engine family and configuration identification.

(D) A prominent unconditional statement of compliance with U.S. Environmental Protection Agency regulations which apply to locomotives and locomotive engines, as applicable:

(*1*) This locomotive conforms to U.S. EPA regulations applicable to locomotives originally manufactured prior to January 1, 2002; or

(*2*) This locomotive conforms to U.S. EPA regulations applicable to locomotives originally manufactured on or after January 1, 2002, but before January 1, 2005; or

(*3*) This locomotive conforms to U.S. EPA regulations applicable to locomotives originally manufactured on or after January 1, 2005.

(E) Date of locomotive original manufacture.

(F) The useful life of the locomotive.

(G) The standards and/or FELs to which the locomotive was certified.

(c) *Engine labels*. (1) Engine labels meeting the specifications of paragraph (c)(2) of this section shall be applied by:

(i) Every manufacturer at the point of original manufacture; and

(ii) Every remanufacturer at the point of remanufacture.

(2)(i) Engine labels shall be permanent and legible and shall be affixed to the engine in a position in which it will be readily visible after installation of the engine in the locomotive.

(ii) The label shall be attached to an engine part necessary for normal operation and not normally requiring replacement during the useful life of the locomotive.

(iii) The label shall be affixed by the manufacturer or remanufacturer, in such manner that it cannot be removed without destroying or defacing the label. The label shall not be affixed to any equipment which is easily detached from such engine.

(iv) The label may be made up of more than one piece, provided that all pieces are permanently attached to the same engine part.

(v) The label shall contain the following information lettered in the

English language in block letters and numerals, which shall be of a color that contrasts with the background of the label:

(A) The label heading: Engine Emission Control Information. Manufacturers and remanufacturers may add a subheading to distinguish this label from the locomotive label described in paragraph (b) of this section.

(B) Full corporate name and trademark of the manufacturer or remanufacturer.

(C) Engine family and configuration identification.

(D) A prominent unconditional statement of compliance with U.S. Environmental Protection Agency regulations which apply to locomotives and locomotive engines, as applicable:

(*1*) This locomotive and locomotive engine conform to U.S. EPA regulations applicable to locomotives and locomotive engines originally manufactured prior to January 1, 2002; or

(*2*) This locomotive and locomotive engine conform to U.S. EPA regulations applicable to locomotives and locomotive engines originally manufactured on or after January 1, 2002 and before January 1, 2005; or

(*3*) This locomotive and locomotive engine conform to U.S. EPA regulations applicable to locomotives and locomotive engines originally manufactured on or after January 1, 2005.

(E) The useful life of the locomotive or locomotive engine.

(F) The standards and/or FELS to which the locomotive or locomotive engine was certified.

(G) Engine tune-up specifications and adjustments, as recommended by the manufacturer or remanufacturer, in accordance with the applicable emission standards, including but not limited to idle speed(s), injection timing or ignition timing (as applicable), valve lash (as applicable), as well as other parameters deemed necessary by the manufacturer or remanufacturer.

(d) The provisions of this section shall not prevent a manufacturer or remanufacturer from also providing on the label any other information that such manufacturer or remanufacturer deems necessary for, or useful to, the proper operation and satisfactory maintenance of the locomotive or engine.

[63 FR 18998, Apr. 16, 1998, as amended at 70 FR 40456, July 13, 2005; 73 FR 37195, June 30, 2008]

§ 92.213 Submission of locomotive and engine identification numbers.

(a) Upon request of the Administrator, the manufacturer or remanufacturer of any locomotive or locomotive engine covered by a certificate of conformity shall, within 30 days of receipt of such request, identify by locomotive and/or engine identification number, the locomotives or engines covered by the certificate of conformity.

(b) The manufacturer or remanufacturer of any locomotives or locomotive engines covered by a certificate of conformity shall provide to the Administrator, within 60 days of the issuance of a certificate of conformity, an explanation of the elements in any locomotive or engine identification coding system in sufficient detail to enable the Administrator to identify those locomotives or engines which are covered by a certificate of conformity.

EFFECTIVE DATE NOTE: At 63 FR 19051, Apr. 16, 1998, § 92.213 was added. This section contains information collection and recordkeeping requirements and will not become effective until approval has been given by the Office of Management and Budget.

§ 92.214 Production locomotives and engines.

Any manufacturer or remanufacturer obtaining certification under this part shall supply to the Administrator, upon his/her request, a reasonable number of production locomotives or locomotive engines, as specified by the Administrator. The maximum number of locomotives or locomotive engines that may be supplied to the Administrator is five per model year. The locomotives or locomotive engines shall be representative of the engines, emission control systems, and fuel systems offered and typical of production locomotives or engines available for sale, or use by railroads, under the certificate. These locomotives or engines shall be supplied for testing at such time and place and for such reasonable periods as the Administrator may require.

§ 92.215 Maintenance of records; submittal of information; right of entry.

(a) Any manufacturer or remanufacturer subject to any of the standards or procedures prescribed in this subpart shall establish, maintain and retain the following adequately organized and indexed records:

(1) *General records.* The records required to be maintained by this paragraph (a) shall consist of:

(i) Identification and description of all certification locomotives or certification locomotive engines for which testing is required under this subpart.

(ii) A description of all emission control systems which are installed on or incorporated in each certification locomotive or certification locomotive engine.

(iii) A description of all procedures used to test each such certification locomotive or certification locomotive engine.

(iv) A copy of all applications for certification, filed with the Administrator.

(2) *Individual records.* (i) A brief history of each locomotive or locomotive engine used for certification under this subpart including:

(A) In the case where a current production engine is modified for use as a certification engine or in a certification locomotive, a description of the process by which the engine was selected and of the modifications made. In the case where the certification locomotive or the engine for a certification locomotive is not derived from a current production engine, a general description of the buildup of the engine (*e.g.*, whether experimental heads were cast and machined according to supplied drawings). In the cases in the previous two sentences, a description of the origin and selection process for fuel system components, ignition system components, intake-air pressurization and cooling-system components, cylinders, pistons and piston rings, exhaust smoke control system components, and exhaust aftertreatment devices as applicable, shall be included. The required descriptions shall specify the steps taken to assure that the certification locomotive or certification locomotive engine, with respect to its engine, drivetrain, fuel system, emission-control system components, exhaust aftertreatment devices, exhaust smoke control system components or any other devices or components as applicable, that can reasonably be expected to influence exhaust emissions will be representative of production locomotives or locomotive engines and that either: All components and/or locomotive or engine, construction processes, component inspection and selection techniques, and assembly techniques employed in constructing such locomotives or engines are reasonably likely to be implemented for production locomotives or engines; or that they are as close as practicable to planned construction and assembly process.

(B) A complete record of all emission tests performed (except tests performed by EPA directly), including test results, the date and purpose of each test, and the number of miles or megawatt-hours accumulated on the locomotive or the number of megawatt-hours accumulated on the engine.

(C) A record and description of all maintenance and other servicing performed, giving the date of the maintenance or service and the reason for it.

(D) A record and description of each test performed to diagnose engine or emission control system performance, giving the date and time of the test and the reason for it.

(E) A brief description of any significant events affecting the locomotive or engine during the period covered by the history and not described by an entry under one of the previous headings, including such extraordinary events as locomotive accidents or accidents involving the engine or dynamometer runaway.

(ii) Each such history shall be started on the date that the first of any of the selection or buildup activities in paragraph (a)(2)(i)(A) of this section occurred with respect to the certification locomotive or engine and shall be kept in a designated location.

(3) All records, other than routine emission test records, required to be maintained under this subpart shall be retained by the manufacturer or remanufacturer for a period of 8 years

after issuance of all certificates of conformity to which they relate. Routine emission test records shall be retained by the manufacturer or remanufacturer for a period of one (1) year after issuance of all certificates of conformity to which they relate. Records may be retained as hard copy or reduced to computer disks, etc., depending on the record retention procedures of the manufacturer or remanufacturer: *Provided*, that in every case all the information contained in the hard copy shall be retained.

(4) Nothing in this section limits the Administrator's discretion in requiring the manufacturer or remanufacturer to retain additional records or submit information not specifically required by this section.

(5) Pursuant to a request made by the Administrator, the manufacturer or remanufacturer shall submit to him/her the information that is required to be retained.

(6) EPA may void a certificate of conformity *ab initio* for a locomotive or engine family for which the manufacturer or remanufacturer fails to retain the records required in this section or to provide such information to the Administrator upon request.

(b) The manufacturer or remanufacturer of any locomotive or locomotive engine subject to any of the standards prescribed in this part shall submit to the Administrator, at the time of issuance by the manufacturer or remanufacturer, copies of all instructions or explanations regarding the use, repair, adjustment, maintenance, or testing of such locomotive or engine, relevant to the control of crankcase, or exhaust emissions issued by the manufacturer or remanufacturer, for use by other manufacturers or remanufacturers, assembly plants, distributors, dealers, owners and operators. Any material not translated into the English language need not be submitted unless specifically requested by the Administrator.

(c) Any manufacturer or remanufacturer participating in averaging, banking and trading program of subpart D of this part must comply with the maintenance of records requirements of § 92.308.

(d)(1) Any manufacturer or remanufacturer who has applied for certification of a new locomotive or new locomotive engine subject to certification test under this subpart shall admit or cause to be admitted any EPA Enforcement Officer during operating hours on presentation of credentials to any of the following:

(i) Any facility where any such tests or any procedures or activities connected with such test are or were performed;

(ii) Any facility where any locomotive or locomotive engine which is being tested (or was tested, or is to be tested) is present;

(iii) Any facility where any construction process or assembly process used in the modification or buildup of such a locomotive or engine into a certification locomotive or certification engine is taking place or has taken place; or

(iv) Any facility where any record or other document relating to any of the above is located.

(2) Upon admission to any facility referred to in paragraph (d)(1) of this section, any EPA Enforcement Officer shall be allowed:

(i) To inspect and monitor any part or aspect of such procedures, activities and testing facilities including, but not limited to, monitoring locomotive or engine preconditioning, emissions tests, mileage (or service) accumulation, maintenance, and locomotive or engine storage procedures, and to verify correlation or calibration of test equipment;

(ii) To inspect and make copies of any such records, designs, or other documents, including those records specified in Subpart D of this part; and

(iii) To inspect and/or photograph any part or aspect of any such certification locomotive, or certification locomotive engine and any components to be used in the construction thereof.

(3) In order to allow the Administrator to determine whether or not production locomotives, or production locomotive engines, conform to the conditions upon which a certificate of conformity has been issued, or conform in all material respects to the design specifications applicable to those locomotives, or engines, as described in the

application for certification for which a certificate of conformity has been issued, any manufacturer or remanufacturer shall admit any EPA Enforcement Officer on presentation of credentials to:

(i) Any facility where any document, design or procedure relating to the translation of the design and construction of engines and emission related components described in the application for certification or used for certification testing into production locomotives or production engines is located or carried on;

(ii) Any facility where any locomotives or locomotive engines, to be introduced into commerce are manufactured or remanufactured; and

(iii) Any facility where records specified this section are located.

(4) On admission to any such facility referred to in paragraph (d)(3) of this section, any EPA Enforcement Officer shall be allowed:

(i) To inspect and monitor any aspects of such manufacture or remanufacture and other procedures;

(ii) To inspect and make copies of any such records, documents or designs;

(iii) To inspect and photograph any part or aspect of any such locomotive(s) or locomotive engine(s) and any component used in the assembly thereof that are reasonably related to the purpose of his/her entry; and

(iv) To inspect and make copies of any records and documents specified this section.

(5) Any EPA Enforcement Officer shall be furnished by those in charge of a facility being inspected with such reasonable assistance as he/she may request to help him/her discharge any function listed in this part. Each applicant for or recipient of certification is required to cause those in charge of a facility operated for its benefit to furnish such reasonable assistance without charge to EPA whether or not the applicant controls the facility.

(6) The duty to admit or cause to be admitted any EPA Enforcement Officer applies to any facility involved in the manufacturing or assembling of locomotives, remanufacturing systems, or locomotive engines, or the installation of locomotive engines or remanufacturing systems, whether or not the manufacturer or remanufactuer owns or controls the facility in question and applies both to domestic and to foreign manufacturers or remanufacturers and facilities. EPA will not attempt to make any inspections which it has been informed that local law forbids. However, if local law makes it impossible to do what is necessary to insure the accuracy of data generated at a facility, no informed judgment that a locomotive or locomotive engine is certifiable or is covered by a certificate can properly be based on those data. It is the responsibility of the manufacturer or remanufacturer to locate its testing and manufacturing and/or remanufacturing facilities in jurisdictions where this situation will not arise.

(7) For purposes of this section:

(i) ''Presentation of credentials'' shall mean display of the document designating a person as an EPA Enforcement Officer.

(ii) Where locomotive, component or engine storage areas or facilities are concerned, ''operating hours'' shall mean all times during which personnel other than custodial personnel are at work in the vicinity of the area or facility and have access to it.

(iii) Where facilities or areas other than those covered by paragraph (d)(7)(ii) of this section are concerned, ''operating hours'' shall mean all times during which an assembly line is in operation or all times during which testing, maintenance, mileage (or service) accumulation, production or compilation of records, or any other procedure or activity related to certification testing, to translation of designs from the test stage to the production stage, or to locomotive (or engine) manufacture, remanufacture, or assembly is being carried out in a facility.

(iv) ''Reasonable assistance'' includes, but is not limited to, clerical, copying, interpretation and translation services, the making available on request of personnel of the facility being inspected during their working hours to inform the EPA Enforcement Officer of how the facility operates and to answer his questions, and the performance on request of emissions tests on any locomotive (or engine) which is

being, has been, or will be used for certification testing. Such tests shall be nondestructive, but may require appropriate mileage (or service) accumulation. A manufacturer or remanufacturer may be compelled to cause the personal appearance of any employee at such a facility before an EPA Enforcement Officer by written request for his appearance, signed by the Assistant Administrator for Air and Radiation or the Assistant Administrator for Enforcement and Compliance Assurance, served on the manufacturer or remanufacturer. Any such employee who has been instructed by the manufacturer or remanufacturer to appear will be entitled to be accompanied, represented and advised by counsel.

(v) Any entry without 24 hour prior written or oral notification to the affected manufacturer or remanufacturer shall be authorized in writing by the Assistant Administrator for Air and Radiation or the Assistant Administrator for Enforcement and Compliance Assurance.

(8) EPA may void a certificate of conformity ab initio for locomotives or locomotive engines introduced into commerce if the manufacturer or remanufacturer (or contractor for the manufacturer or remanufacturer, if applicable) fails to comply with any provision of this section.

[63 FR 18998, Apr. 16, 1998, as amended at 70 FR 40456, July 13, 2005]

§ 92.216 Hearing procedures.

(a)(1) After granting a request for a hearing under § 92.210 or § 92.208, the Administrator shall designate a Presiding Officer for the hearing.

(2) [Reserved]

(3) The hearing shall be held as soon as practicable at a time and place fixed by the Administrator or by the Presiding Officer.

(4) In the case of any hearing requested pursuant to § 92.208, the Administrator may in his/her discretion direct that all argument and presentation of evidence be concluded within such fixed period not less than 30 days as he/she may establish from the date that the first written offer of a hearing is made to the manufacturer. To expedite proceedings, the Administrator may direct that the decision of the Presiding Officer (who may, but need not be, the Administrator) shall be the final EPA decision.

(b)(1) Upon his/her appointment pursuant to paragraph (a) of this section, the Presiding Officer will establish a hearing file. The file shall consist of the notice issued by the Administrator under § 92.210 or § 92.208 together with any accompanying material, the request for a hearing and the supporting data submitted therewith, and all documents relating to the request for certification and all documents submitted therewith, and correspondence and other data material to the hearing.

(2) The hearing file will be available for inspection by the applicant at the office of the Presiding Officer.

(c) An applicant may appear in person, or may be represented by counsel or by any other duly authorized representative.

(d)(1) The Presiding Officer, upon the request of any party, or in his/her discretion, may arrange for a prehearing conference at a time and place specified by him/her to consider the following:

(i) Simplification of the issues;

(ii) Stipulations, admissions of fact, and the introduction of documents;

(iii) Limitation of the number of expert witnesses;

(iv) Possibility of agreement disposing of all or any of the issues in dispute;

(v) Such other matters as may aid in the disposition of the hearing, including such additional tests as may be agreed upon by the parties.

(2) The results of the conference shall be reduced to writing by the Presiding Officer and made part of the record.

(e)(1) Hearings shall be conducted by the Presiding Officer in an informal but orderly and expeditious manner. The parties may offer oral or written evidence, subject to the exclusion by the Presiding Officer of irrelevant, immaterial and repetitious evidence.

(2) Witnesses will not be required to testify under oath. However, the Presiding Officer shall call to the attention of witnesses that their statements may be subject to the provisions of 18 U.S.C. 1001 which imposes penalties for knowingly making false statements or

representations, or using false documents in any matter within the jurisdiction of any department or agency of the United States.

(3) Any witness may be examined or cross-examined by the Presiding Officer, the parties, or their representatives.

(4) Hearings shall be reported verbatim. Copies of transcripts of proceedings may be purchased by the applicant from the reporter.

(5) All written statements, charts, tabulations, and similar data offered in evidence at the hearings shall, upon a showing satisfactory to the Presiding Officer of their authenticity, relevancy, and materiality, be received in evidence and shall constitute a part of the record.

(6) Oral argument may be permitted in the discretion of the Presiding Officer and shall be reported as part of the record unless otherwise ordered by him/her.

(f)(1) The Presiding Officer shall make an initial decision which shall include written findings and conclusions and the reasons or basis therefor on all the material issues of fact, law, or discretion presented on the record. The findings, conclusions, and written decision shall be provided to the parties and made a part of the record. The initial decision shall become the decision of the Administrator without further proceedings unless there is an appeal to the Administrator or motion for review by the Administrator within 30 days of the date the initial decision was filed.

(2) On appeal from or review of the initial decision the Administrator shall have all the powers which he/she would have in making the initial decision including the discretion to require or allow briefs, oral argument, the taking of additional evidence or the remanding to the Presiding Officer for additional proceedings. The decision by the Administrator shall include written findings and conclusions and the reasons or basis therefor on all the material issues of fact, law, or discretion presented on the appeal or considered in the review.

[63 FR 18998, Apr. 16, 1998, as amended at 70 FR 40456, July 13, 2005]

EFFECTIVE DATE NOTE: At 63 FR 19053, Apr. 16, 1998, § 92.216 was added. This section contains information collection and recordkeeping requirements and will not become effective until approval has been given by the Office of Management and Budget.

Subpart D—Certification Averaging, Banking, and Trading Provisions

§ 92.301 Applicability.

Locomotive engine families subject to the provisions of subpart A of this part are eligible to participate in the certification averaging, banking, and trading program described in this subpart. The provisions of this subpart apply to manufacturers and remanufacturers of new locomotives and new locomotive engines manufactured or remanufactured in the 1999 model year or later.

§ 92.302 Definitions.

The definitions of subpart A of this part apply to this subpart. The following definitions also apply.

Applicable standard means a standard that would have otherwise been applicable had the locomotive or locomotive engine not been certified under this subpart to an FEL different than that standard.

Broker means any entity that facilitates a trade between a buyer and seller.

Buyer means the entity that receives credits as a result of trade or transfer.

Reserved credits means credits that have been generated but have not yet been reviewed by EPA or used to demonstrate compliance under the averaging provisions of this subpart.

Seller means the entity that provides credits during a trade or transfer.

Transfer means to convey control of credits generated from an individual locomotive to the purchaser, owner or operator of the locomotive at the time of manufacture or remanufacture; or to convey control of previously generated credits from the purchaser, owner or operator of an individual locomotive to the manufacturer or remanufacturer at the time of manufacture or remanufacture.

§ 92.303 General provisions.

(a) Participation in the averaging, banking and trading program is voluntary. A manufacturer or remanufacturer may choose to involve some or all of its families in any or all aspects of the program.

(b) An engine family is eligible to participate in the certification averaging, banking, and trading program for NO_X and PM emissions if it is subject to regulation under this part with certain exceptions specified in paragraph (c) of this section. No averaging, banking and trading program is available for meeting the HC, CO, or smoke emission standards of this part.

(c) Locomotives and locomotive engines may not participate in the certification averaging, banking, and trading program if they are exported. Only locomotive and locomotive engines certified under this part are eligible for inclusion in this certification averaging, banking, and trading program.

(d) Averaging involves the generation of credits by a manufacturer or remanufacturer for use by that same manufacturer or remanufacturer in the same calendar year. A manufacturer or remanufacturer may use averaging during certification to offset an emission exceedance of an engine family caused by an FEL above the applicable emission standard, subject to the provisions of this subpart.

(e) Banking involves the generation of credits by a manufacturer or remanufacturer in a given calendar year for use in a subsequent model year. A manufacturer or remanufacturer may bank actual credits only after the end of the calendar year and after EPA has reviewed the manufacturer's or remanufacturer's end-of-year reports. During the calendar year and before submittal of the end-of-year report, credits originally designated in the certification process for banking will be considered reserved and may be redesignated for trading or averaging in the end-of-year report. Credits declared for banking from the previous calendar year that have not been reviewed by EPA may be used in averaging or trading transactions. However, such credits may be revoked at a later time following EPA review of the end-of-year report or any subsequent audit actions.

(f) Trading involves the sale of banked credits for use in certification of new locomotives and new locomotive engines under this part. Only banked credits may be traded; reserved credits may not be traded.

(g) Credit transfer involves the conveying of control over credits, as defined in § 92.302. Transferred credits can be used in averaging or in subsequent transfers. Transferred credits may also be reserved for later banking. Transferred credits may not be traded unless they have been previously banked.

§ 92.304 Compliance requirements.

(a) Manufacturers or remanufacturers wishing to participate in certification averaging, banking and trading programs shall select a FEL for each engine family they wish to include. The level of the FEL shall be selected by the manufacturer or remanufacturer, subject to the upper limits described in paragraph (k) of this section. An engine family certified to an FEL is subject to all provisions specified in this part, except that the applicable FEL replaces the applicable NO_X and PM emission standard for the family participating in the averaging, banking, and trading program.

(b) A manufacturer or remanufacturer may certify one or more engine families at FELs above or below the applicable emission standard, provided the summation of the manufacturer's or remanufacturer's projected balance of all credit transactions in a given calendar year is greater than or equal to zero, as calculated for each family under § 92.305 and reported under § 92.309.

(c) Manufacturers and remanufacturers certifying engine families with FELs exceeding the applicable emission standard shall obtain emission credits in amounts sufficient to address the shortfall. Credits may be obtained from averaging, banking, trading or transfer, subject to the restrictions described in this subpart.

(d) Manufacturers and remanufacturers certifying engine families with FELs below the applicable emission

standard may generate emission credits to average, bank, trade, or transfer, or a combination thereof.

(e) Credits may only be used for certification; they may not be used to remedy a violation of the FEL determined by production line or in-use testing. Credits may be used to allow subsequent production of engines for an engine family failing production line testing if the manufacturer elects to recertify to a higher FEL

(f) If an FEL is changed after initial certification in any given model year, the manufacturer/remanufacturer must conduct production line testing to verify that the emission levels are achieved.

(g) Manufacturers and remanufacturers participating in the averaging, banking and trading program must demonstrate compliance with the applicable emission standards at the end of the model year. Manufacturers and remanufacturers that have certified engine families to FELs above the applicable emission standards and do not have sufficient emission credits to offset the difference between the emission standard and the FEL for such engine family(ies) will be in violation of the conditions of the certificate of conformity for such engine family(ies). The certificates of conformity may be voided *ab initio* for those engine families.

(h) In the event of a negative credit balance resulting from a credit trade or transfer, both the buyer(s) and the seller(s) are liable, except in cases involving fraud. Certificates of all engine families participating in a negative trade may be voided *ab initio*.

(1) Where a buyer of credits is not responsible for causing the negative credit balance, it is only liable to supply additional credits equivalent to any amount of invalid credits that it used.

(2) Credit holders responsible for the credit shortfall may be subject to the requirements of § 92.309(g)(3).

(i) Averaging sets. This subpart includes separate programs for compliance with each type of cycle-weighted standards in § 92.8 (i.e., line-haul and switch). Credits generated over the line-haul duty-cycle may not be used for compliance with the switch duty-cycle, and credits generated over the switch duty-cycle may not be used for compliance with the line-haul duty-cycle.

(j) Cross tier credit exchanges. Cross tier credit exchanges for NO_X and PM emission credits may be exchanged between and among Tier 0, Tier 1, and Tier 2 engine families with the following exceptions:

(1) For 2005 and 2006 model year freshly manufactured locomotives, manufacturers may use PM credits for all of their freshly manufactured engine families. Manufacturers may use NO_X credits only for engine families that are projected to represent 75 percent or less of their total projected annual production of freshly manufactured locomotives. The remainder must comply with the Tier 2 NO_X emission standards without the use of credits.

(2) For 2007 and later model year freshly manufactured locomotives, manufacturers may use PM credits for all of their freshly manufactured engine families. Manufacturers may use NO_X credits only for engine families that are projected to represent 50 percent or less of their total projected annual production of freshly manufactured locomotives. The remainder must comply with the Tier 2 NO_X emission standards without the use of credits.

(3) Credits generated from remanufactured locomotives prior to January 1, 2002 and which are banked may only be used for compliance with the Tier 1 or later emission standards.

(k) Upper limits. The FELs for NO_X and PM for new locomotives and new locomotive engines certified to the Tier 1 and Tier 2 standards may not exceed the following values:

(1) Tier 1: the Tier 0 standards.

(2) Tier 2: the Tier 1 standards, except as noted in paragraph (j) of this section.

(l) Credit life shall be unlimited.

(m) Credits may be generated by any certifying manufacturer or remanufacturer and may be held by any of the following entities:

(1) Locomotive or locomotive engine manufacturers;

(2) Locomotive or locomotive engine remanufacturers;

(3) Locomotive or locomotive engine owners;

(4) Locomotive or locomotive engine operators; or

(5) Other entities after notification to EPA.

(n)(1) All locomotives that are certified to an FEL that is different from the emission standard that would otherwise apply to the locomotive or locomotive engine are required to comply with that FEL for the remainder of their service lives, except as allowed by § 92.8(a)(4)(iii) and this subpart.

(2) Manufacturers shall notify the purchaser of any locomotive engine that is certified to an FEL that is different from the emission standard that would otherwise apply that the locomotive or locomotive engine is required to comply with that FEL for the remainder of its service life.

(3) Remanufacturers shall notify the owner of any locomotive or locomotive engine that is certified to an FEL that is different from the emission standard that would otherwise apply that the locomotive (or the locomotive in which the engine is used) is required to comply with that FEL for the remainder of its service life.

[63 FR 18998, Apr. 16, 1998, as amended at 73 FR 59183, Oct. 8, 2008]

§ 92.305 Credit generation and use calculation.

(a) For each participating engine family, NO_X and PM emission credits (positive or negative) are to be calculated according to the following equation and rounded in accordance with ASTM E29–93a, to the nearest Megagram (Mg). Consistent units are to be used throughout the calculation.

(1) When useful life is expressed in terms of megawatt-hrs:

Credits for each engine family are calculated as: Emission credits=(Std − FEL) × (UL) × (Production) × (Fp) × (10^{-3} kW-Mg/MW-g).

(2) Where:

(i) Std=the applicable locomotive and locomotive engine NO_X and/or PM emission standard in grams per kilowatt-hour (exceptions: Std=0.43 g/kW-hr, for Tier 0 and Tier 1 PM line-haul credits; Std=0.59 g/kW-hr, for Tier 0 and Tier 1 PM switch credits; and Std=previous FEL in g/kW-hr, for locomotives that were certified to an FEL other than the standard during the previous useful life).

(ii) FEL=the family emission limit for the engine family in grams per kilowatt-hour. For Tier 1 and Tier 2 engine families, the FEL may not exceed the limit established in § 92.304(k) for each pollutant.

(iii) UL=the sales weighted average useful life in megawatt-hours, based on the sales weighted average horsepower of the engine family (or the subset of the engine family for which credits are being calculated), as specified in the application for certification.

(iv) Production=the number of locomotives or locomotive engines participating in the averaging, banking, and trading program within the given engine family during the calendar year (or the number of locomotives or locomotive engines in the subset of the engine family for which credits are being calculated). Quarterly production projections are used for initial certification. Actual applicable production/sales volumes are used for end-of-year compliance determination.

(v) F_p=the proration factor as determined in paragraph (c) of this section.

(b) When useful life is expressed in terms of miles or years, the useful life in terms of megawatt hours (UL) shall be calculated by dividing the useful life in miles by 100,000, and multiplying by the sales weighted average horsepower of the engine family. Credits are calculated using this UL value in the equations of paragraph (a) of this section.

(c) The proration factor is an estimate of the fraction of a locomotive's service life that remains as a function of age.

(1) The locomotive's age is the length of time in years from the date of original manufacture to the date at which the remanufacture (for which credits are being calculated) is completed, rounded to the next higher year.

(2) The proration factors for ages 1 through 32 are specified in Table D305–1 of this section. For locomotives or locomotive engines more than 32 years old, the proration factor for 32 year old locomotives shall be used.

(3) For replacement or repower engines, the proration factor is based on

the age of the locomotive chassis, not the age of the engine.

TABLE TO § 92.305

TABLE D305–1—PRORATION FACTOR

Age	F_p	Age	F_p
1	0.964	17	0.452
2	0.929	18	0.429
3	0.893	19	0.405
4	0.857	20	0.381
5	0.821	21	0.357
6	0.786	22	0.333
7	0.750	23	0.310
8	0.714	24	0.286
9	0.679	25	0.268
10	0.643	26	0.250
11	0.607	27	0.232
12	0.571	28	0.214
13	0.548	29	0.196
14	0.524	30	0.179
15	0.500	31	0.161
16	0.476	32	0.143

§ 92.306 Certification.

(a) In the application for certification a manufacturer or remanufacturer must:

(1) Declare its intent to include specific engine families in the averaging, banking, and/or trading programs. Separate declarations are required for each program (line-haul and switch) and for each pollutant (NO_X and PM).

(2) Declare duty-cycle FELs for each engine family participating in certification averaging, banking, and/or trading.

(i) The FELs must be to the same number of significant digits as the emission standard.

(ii) In no case may the FEL exceed the upper limit prescribed in § 92.304(k).

(3) Conduct and submit detailed calculations of projected emission credits (positive or negative) based on quarterly production projections for each participating family and for each pollutant, using the applicable equation in § 92.305 and the applicable values of the terms in the equation for the specific family.

(i) If the engine family is projected to have negative emission credits, state specifically the source (manufacturer/engine family, remanufacturer/engine family, or transfer) of the credits necessary to offset the credit deficit according to quarterly projected production.

(ii) If the engine family is projected to generate credits, state specifically where the quarterly projected credits will be applied (manufacturer/engine family or remanufacturer/engine family, reserved or transfer).

(4) Submit a statement that the locomotives or locomotive engines for which certification is requested will not, to the best of the manufacturer's or remanufacturer's belief, cause the manufacturer or remanufacturer to have a negative credit balance when all credits are calculated for all the manufacturer's or remanufacturer's engine families participating in the averaging, banking, and trading program.

(b) Based on this information, each manufacturer's certification application must demonstrate:

(1) That at the end of model year production, each engine family has a net emissions balance equal to or greater than zero for any pollutant and program for which participation in certification under averaging, banking, and/or trading is being sought. The equation in section § 92.305 shall be used in this calculation for each engine family.

(2) That the manufacturer or remanufacturer will obtain sufficient credits to be used to comply with the emission standard for any engine family with an FEL that exceeds the applicable emission standard, or where credits will be applied if the FEL is less than the emission standard. In cases where credits are being obtained, for each engine family involved the manufacturer or remanufacturer must identify specifically the source of the credits being used (manufacturer/engine family, or remanufacturer/engine family, or transfer). All such reports shall include all credits involved in certification averaging, banking, or trading.

(3) In cases where credits are being generated/supplied, each engine family must indicate specifically the designated use of the credits involved (manufacturer/remanufacturer and engine family, reserved or transfer). All such reports shall include all credits involved in certification averaging, banking, or trading.

(c) Manufacturers and remanufacturers must monitor projected versus actual production throughout the model year to ensure that compliance with

emission standards is achieved at the end of the model year.

(d) At the end of the model year, the manufacturer or remanufacturer must provide the end-of-year reports required under § 92.309.

(1) Projected credits based on the information supplied in the certification application may be used to obtain a certificate of conformity. However, any such projected credits must be validated based on review of the end of model year reports and may be revoked at a later time based on follow-up audits or any other verification measure deemed appropriate by the Administrator.

(2) Compliance for engine families using averaging, banking, or trading will be determined at the end of the model year. Manufacturers and remanufacturers that have certified engine families with credit balances for NO_X and/or PM that do not equal or exceed zero shall be in violation of the conditions of the certificate of conformity for such engine families. The certificate of conformity may be voided *ab initio* for those engine families.

(e) Other conditions of certification.

(1) All certificates issued are conditional upon compliance by the manufacturer or remanufacturer with the provisions of this subpart both during and after the calendar year of production.

(2) Failure to comply with all provisions of this subpart will be considered to be a failure to satisfy the conditions upon which the certificate was issued, and the certificate may be deemed void *ab initio*.

(3) The manufacturer or remanufacturer (as applicable) bears the burden of establishing to the satisfaction of the Administrator that the conditions upon which the certificate was issued were satisfied or waived.

§ 92.307 Labeling.

For all locomotives and locomotive engines included in the certification averaging, banking, and trading program, the FEL to which the locomotive or locomotive engine is certified must be included on the label required in § 92.212. This label must include the notification specified in § 92.304(n).

§ 92.308 Maintenance of records.

(a) The manufacturer or remanufacturer of any locomotive or locomotive engine that is certified under the averaging, banking, and trading program must establish, maintain, and retain the following adequately organized and indexed records for each such locomotive or locomotive engine produced:

(1) EPA engine family and configuration;

(2) Engine identification number;

(3) Engine calendar year and build date;

(4) Rated horsepower;

(5) Purchaser and destination or owner; and

(6) Assembly plant.

(b) The manufacturer or remanufacturer of any engine family that is certified under the averaging, banking, and trading program must establish, maintain, and retain the following adequately organized and indexed records for each such family:

(1) Model year and EPA engine family;

(2) Family Emission Limit (FEL);

(3) Rated horsepower for each configuration;

(4) Projected applicable production/sales volume for the calendar year;

(5) Actual applicable production/sales volume for the calendar year; and

(6) Useful life.

(c) Any manufacturer or remanufacturer producing an engine family participating in trading or transfer of credits must maintain the following records on a quarterly basis for each engine family in the trading program:

(1) The model year and engine family;

(2) The actual quarterly and cumulative applicable production/sales volume;

(3) The values required to calculate credits as given in § 92.305;

(4) The resulting type and number of credits generated/required;

(5) How and where credit surpluses are dispersed; and

(6) How and through what means credit deficits are met.

(d) The manufacturer or remanufacturer must retain all records required to be maintained under this section for a period of 8 years from the due date for the end-of-calendar year report. Records may be retained as hard copy

or reduced to microfilm, ADP diskettes, and so forth, depending on the manufacturer's or remanufacturer's record retention procedure; provided, that in every case all information contained in the hard copy is retained.

(e) Nothing in this section limits the Administrator's discretion in requiring the manufacturer or remanufacturer to retain additional records or submit information not specifically required by this section.

(f) Pursuant to a request made by the Administrator, the manufacturer or remanufacturer must submit to the Administrator the information that the manufacturer or remanufacturer is required to retain.

(g) EPA may void *ab initio* a certificate of conformity for an engine family for which the manufacturer or remanufacturer fails to retain the records required in this section or to provide such information to the Administrator upon request.

EFFECTIVE DATE NOTE: At 63 FR 19056, Apr. 16, 1998, § 92.308 was added. This section contains information collection and recordkeeping requirements and will not become effective until approval has been given by the Office of Management and Budget.

§ 92.309 Reports.

(a) Manufacturer or remanufacturers must submit the certification information as required under § 92.306, and end-of-year reports each year as part of their participation in certification averaging, banking, and trading programs. All entities involved in credit trades or transfers must submit quarterly reports as specified in paragraph (b) of this section.

(b) *Quarterly reports.* (1) Those holding or receiving transferred credits as allowed in § 92.303(m) must submit quarterly reports of their holdings or receipts when credits are gained or lost.

(2) The reports shall include the source or recipient of the credits the amount of credits involved plus remaining balances, details regarding the pollutant, duty-cycle, and model year/Tier as well as the information prescribed in § 92.308(c). Copies of contracts related to credit trading or transfer must be included or supplied by the buyer, seller, and broker, as applicable.

(c) End-of-year reports must include the information prescribed in § 92.308(b). The report shall include a calculation of credit balances for each family to show that the summation of the manufacturer's or remanufacturer's use of credits results in a credit balance equal to or greater than zero. The report shall be consistent in detail with the information submitted under § 92.306 and show how credit surpluses were dispersed and how credit shortfalls were met on a family specific basis. The end-of-year report shall incorporate any information reflected in previous quarterly reports.

(d) The applicable production/sales volume for quarterly and end-of-year reports must be based on the location of either the point of first retail sale by the manufacturer or remanufacturer or the point at which the locomotive is placed into service, whichever occurs first. This is called the final product purchase location.

(e) Each quarterly and end-of-year report submitted shall include a statement certifying to the accuracy and authenticity of the material reported therein.

(f) *Requirements for submission.* (1) Quarterly reports must be submitted within 90 days of the end of the calendar quarter to: Group Manager, Engine Compliance Programs Group, Engine Programs and Compliance Division U.S. Environmental Protection Agency, 6403–J, 1200 Pennsylvania Ave., NW., Washington, DC 20460.

(2) End-of-year reports must be submitted within 120 days of the end of the calendar year to: Group Manager, Engine Compliance Programs Group, Engine Programs and Compliance Division, U.S. Environmental Protection Agency, 6403–J, 1200 Pennsylvania Ave., NW., Washington, DC 20460.

(3) Failure by a manufacturer or a remanufacturer participating in the averaging, banking, or trading program to submit any quarterly or end-of-year reports in the specified time for all engines is a violation of sections 203(a)(1) and 213 of the Clean Air Act for each locomotive or locomotive engine.

(4) A manufacturer or remanufacturer generating credits for banking

only who fails to submit end-of-year reports in the applicable specified time period (120 days after the end of the calendar year) may not use or trade the credits until such reports are received and reviewed by EPA. Use of projected credits pending EPA review is not permitted in these circumstances.

(g) *Reporting errors.* (1) Errors discovered by EPA or the manufacturer or the remanufacturer as applicable in the end-of-year report, including errors in credit calculation, may be corrected 180-days subsequent to submission of the end-of-year report. Errors discovered by EPA after 180-days shall be correctable if, as a result of the correction, the manufacturer's or remanufacturer's credits are reduced. Errors in the manufacturer's or remanufacturer's favor are not corrected if discovered after the 180-day correction period allowed.

(2) If EPA or the manufacturer or remanufacturer determines that a reporting error occurred on an end of year report previously submitted to EPA under this section, the manufacturer's or remanufacturer's credits and credit calculations will be recalculated. Erroneous positive credits will be void. Erroneous negative credit balances may be corrected by EPA.

(3) If EPA review of a manufacturer's or remanufacturers end-of-year report indicates a credit shortfall, the manufacturer or remanufacturer will be permitted to purchase the necessary credits to bring the credit balance to zero. These credits must be supplied at the ratio of 1.1 credits for each 1.0 credit needed. If sufficient credits are not available to bring the credit balance to zero for the family(ies) involved, EPA may void the certificate(s) for that family(ies) *ab initio*. In addition, all locomotives and locomotive engines within an engine family for which there are insufficient credits will be considered to have violated the conditions of the certificate of conformity and therefore not covered by that certificate.

(4) If within 180 days of receipt of the manufacturer's or remanufacturer's end-of-year report, EPA review determines a reporting error in the manufacturer's or remanufacturer's favor (that is, resulting in an increased credit balance) or if the manufacturer or remanufacturer discovers such an error within 180 days of EPA receipt of the end-of-year report, the credits are restored for use by the manufacturer or remanufacturer.

EFFECTIVE DATE NOTE: At 63 FR 19057, Apr. 16, 1998, § 92.309 was added. This section contains information collection and recordkeeping requirements and will not become effective until approval has been given by the Office of Management and Budget.

§ 92.310 Notice of opportunity for hearing.

Any voiding of the certificate under this subpart will be made only after the manufacturer or remanufacturer concerned has been offered an opportunity for a hearing conducted in accordance with § 92.216 and, if a manufacturer or remanufacturer requests such a hearing, will be made only after an initial decision by the Presiding Officer.

Subpart E—Emission-Related Defect Reporting Requirements, Voluntary Emission Recall Program

§ 92.401 Applicability.

The requirements of this subpart are applicable to manufacturers and remanufacturers of locomotives and locomotive engines subject to the provisions of subpart A of this part. The requirement to report emission-related defects affecting a given class or category of locomotives or locomotive engines applies for eight years from the end of the year in which such locomotives or locomotive engines were manufactured, or remanufactured, as applicable.

§ 92.402 Definitions.

The definitions of subpart A of this part apply to this subpart.

§ 92.403 Emission defect information report.

(a) A manufacturer or remanufacturer must file a defect information report whenever it determines, in accordance with procedures it established to

identify either safety-related or performance defects, (or based on other information) that a specific emission-related defect exists in ten or more locomotives or locomotive engines. No report must be filed under this paragraph for any emission-related defect corrected prior to the sale, or reintroduction into service of a remanufactured locomotive or locomotive engine, of the affected locomotives or locomotive engines to an ultimate purchaser.

(b) Defect information reports required under paragraph (a) of this section must be submitted not more than 15 working days after the same emission-related defect is found to affect 10 or more locomotives or locomotive engines. Information required by paragraph (c) of this section that is either not available within 15 working days or is significantly revised must be submitted as it becomes available.

(c) Except as provided in paragraph (b) of this section, each defect report must contain the following information in substantially the format outlined as follows:

(1) The manufacturer's or remanufacturer's corporate name.

(2) A description of the defect.

(3) A description of each class or category of locomotives or locomotive engines potentially affected by the defect including make, model, calendar year produced, purchaser (or owner) and any other information as may be required to identify the locomotives or locomotive engines affected.

(4) For each class or category of locomotives and locomotive engines described in response to paragraph (c)(3) of this section, the following shall also be provided:

(i) The number of locomotives and/or locomotive engines known or estimated to have the defect and an explanation of the means by which this number was determined.

(ii) The address of the plant(s) at which the potentially defective locomotives or locomotive engines were produced.

(5) An evaluation of the emissions impact of the defect and a description of any operational or performance problems which a defective locomotive or locomotive engine might exhibit.

(6) Available emissions data which relate to the defect.

(7) An indication of any anticipated follow-up by the manufacturer or remanufacturer.

[63 FR 18998, Apr. 16, 1998, as amended at 70 FR 40456, July 13, 2005]

§ 92.404 Voluntary emissions recall reporting.

(a) When any manufacturer or remanufacturer initiates a voluntary emissions recall campaign involving a locomotive or locomotive engine, the manufacturer or remanufacturer shall submit to EPA a report describing the manufacturer's or remanufacturer's voluntary emissions recall plan as prescribed by this section within 15 working days of the date owner notification was begun. The report shall contain the following:

(1) A description of each class or category of locomotives or locomotive engines recalled including the number of locomotives or locomotive engines to be recalled, the calendar year if applicable, the make, the model, and such other information as may be required to identify the locomotives or locomotive engines recalled.

(2) A description of the specific modifications, alterations, repairs, corrections, adjustments, or other changes to be made to correct the locomotives or locomotive engines affected by the emission-related defect.

(3) A description of the method by which the manufacturer or remanufacturer will notify locomotive or locomotive engine owners.

(4) A description of the proper maintenance or use, if any, upon which the manufacturer or remanufacturer conditions eligibility for repair under the remedial plan, an explanation of the manufacturer's or remanufacturer's reasons for imposing any such condition, and a description of the proof to be required of a locomotive or locomotive-engine owner to demonstrate compliance with any such condition.

(5) A description of the procedure to be followed by locomotive or locomotive-engine owners to obtain correction of the nonconformity. This shall include designation of the date on or after which the owner can have the

nonconformity remedied, the time reasonably necessary to perform the labor to remedy the defect, and the designation of facilities at which the defect can be remedied.

(6) If some or all the nonconforming locomotives or locomotive engines are to be remedied by persons other than authorized warranty agents of the manufacturer or remanufacturer, a description of the class of persons other than authorized warranty agents of the manufacturer or remanufacturer who will remedy the defect.

(7) A copy of any written notification sent to locomotive or locomotive-engine owners.

(8) A description of the system by which the manufacturer or remanufacturer will assure that an adequate supply of parts will be available to perform the repair under the remedial plan including the date by which an adequate supply of parts will be available to initiate the repair campaign, the percentage of the total parts requirement of each person who is to perform the repair under the remedial plan to be shipped to initiate the campaign, and the method to be used to assure the supply remains both adequate and responsive to owner demand.

(9) Three copies of all necessary instructions to be sent to those persons who are to perform the repair under the remedial plan.

(10) A description of the impact of the changes on fuel consumption, operation or performance, and safety of each class or category of locomotives or locomotive engines to be recalled.

(11) A sample of any label to be applied to locomotives or locomotive engines which participate in the voluntary recall campaign.

(b) Unless otherwise specified by the Administrator, the manufacturer or remanufacturer shall report on the progress of the recall campaign by submitting subsequent reports for six consecutive quarters, or until proven that remedial action has been adequately taken on all affected locomotives or locomotive engines, whichever occurs first, commencing with the quarter after the voluntary emissions recall campaign actually begins. Such reports shall be submitted no later than 25 working days after the close of each calendar quarter. For each class or category of locomotive or locomotive engine subject to the voluntary emissions recall campaign, the quarterly report shall contain the:

(1) Emission recall campaign number, if any, designated by the manufacturer or remanufacturer.

(2) Date owner notification was begun, and date completed.

(3) Number of locomotives or locomotive engines involved in the voluntary emissions recall campaign.

(4) Number of locomotives or locomotive engines known or estimated to be affected by the emission-related defect and an explanation of the means by which this number was determined.

(5) Number of locomotives or locomotive engines inspected pursuant to voluntary emission recall plan.

(6) Number of inspected locomotives or locomotive engines found to be affected by the emissions-related defect.

(7) Number of locomotives or locomotive engines actually receiving repair under the remedial plan.

(8) Number of locomotives or locomotive engines determined to be unavailable for inspection or repair under the remedial plan due to exportation, scrappage, or for other reasons (specify).

(9) Number of locomotives or locomotive engines determined to be ineligible for remedial action due to a failure to properly maintain or use such locomotives or locomotive engines.

(10) Three copies of any service bulletins which relate to the defect to be corrected and which have not previously been reported.

(11) Three copies of all communications transmitted to locomotive or locomotive-engine owners which relate to the defect to be corrected and which have not previously been submitted.

(c) If the manufacturer or remanufacturer determines that any of the information requested in paragraph (b) of this section has changed or was incorrect, revised information and an explanatory note shall be submitted. Answers to paragraphs (b) (5), (6), (7), (8), and (9) of this section shall be cumulative totals.

(d) The manufacturer or remanufacturer shall maintain in a form suitable

for inspection, such as computer information storage devices or card files, the names and addresses of locomotive and locomotive-engine owners:

(1) To whom notification was given;

(2) Who received remedial repair or inspection under the remedial plan; and

(3) Who were determined not to qualify for such remedial action when eligibility is conditioned on proper maintenance or use.

(e) The records described in paragraph (d) of this section shall be made available to the Administrator upon request.

§ 92.405 Alternative report formats.

(a) Any manufacturer or remanufacturer may submit a plan for making either of the reports required by §§ 92.403 and 92.404 on computer diskettes, magnetic tape or other machine readable format. The plan shall be accompanied by sufficient technical detail to allow a determination that data requirements of these sections will be met and that the data in such format will be usable by EPA.

(b) Upon approval by the Administrator of the reporting system, the manufacturer or remanufacturer may use such system until otherwise notified by the Administrator.

§ 92.406 Reports filing: record retention.

(a) The reports required by §§ 92.403 and 92.404 shall be sent to: Group Manager, Engine Compliance Programs Group, Engine Programs and Compliance Division, U.S. Environmental Protection Agency, 6403–J, 1200 Pennsylvania Ave., NW., Washington, DC 20460.

(b) The information gathered by the manufacturer or remanufacturer to compile the reports required by §§ 92.403 and 92.404 shall be retained for not less than 8 years from the date of the manufacture of the locomotives or locomotive engines and shall be made available to duly authorized officials of the EPA upon request.

EFFECTIVE DATE NOTE: At 63 FR 19059, Apr. 16, 1998, § 92.406 was added. This section contains information collection and recordkeeping requirements and will not become effective until approval has been given by the Office of Management and Budget.

§ 92.407 Responsibility under other legal provisions preserved.

The filing of any report under the provisions of this subpart shall not affect a manufacturer's or a remanufacturer's responsibility to file reports or applications, obtain approval, or give notice under any provision of law.

§ 92.408 Disclaimer of production warranty applicability.

(a) The act of filing an Emission Defect Information Report pursuant to § 92.403 is inconclusive as to the existence of a defect subject to the warranty provided by section 207(a) of the Act.

(b) A manufacturer or remanufacturer may include on each page of its Emission Defect Information Report a disclaimer stating that the filing of a Defect Information Report pursuant to these regulations is not conclusive as to the applicability of the Production Warranty provided by section 207(a) of the Act.

Subpart F—Manufacturer and Remanufacturer Production Line Testing and Audit Programs

§ 92.501 Applicability.

The requirements of this subpart are applicable to manufacturers and remanufacturers of locomotives and locomotive engines subject to the provisions of subpart A of this part, except as follows:

(a) The requirements of §§ 92.503, 92.505, 92.506, 92.507, 92.508, and 92.510 only apply to manufacturers of freshly manufactured locomotives or locomotive engines (including those used for repowering). The Administrator may also apply these requirements to remanufacturers of any locomotives or locomotive engines for which there is reason to believe production problems exist that could affect emissions performance. EPA will notify such remanufacturers when it makes a determination that production problems may exist that could affect emissions performance, and the requirements of these sections shall apply as specified in the notice.

(b) The requirements of § 92.511 only apply to remanufacturers of locomotives and locomotive engines.

(c) Manufacturers may comply with the provisions of subpart D of 40 CFR part 1033 instead of the provisions of this subpart F.

[63 FR 18998, Apr. 16, 1998, as amended at 73 FR 37195, June 30, 2008]

§ 92.502 Definitions.

The definitions in subpart A of this part apply to this subpart.

§ 92.503 General Requirements.

(a) Manufacturers (and remanufacturers, where applicable) shall test production line locomotives or locomotive engines using the test procedures specified in § 92.506. The Administrator may require manufacturers and remanufacturers to conduct production line testing on locomotives. If the Administrator determines that locomotive testing is required, he/she shall notify the manufacturer or remanufacturer, and shall specify in such notice the time period in which the manufacturer or remanufacturer shall complete such testing.

(b) Remanufacturers of locomotives and locomotive engines shall conduct audits pursuant to the requirements of § 92.511 to ensure that remanufactured locomotives and locomotive engines comply with the requirements of this part.

(c) Upon request, the Administrator may also allow manufacturers (and remanufacturers, where applicable) to conduct alternate production line testing programs, provided the Administrator determines that the alternate production line testing program provides equivalent assurance that the locomotives and locomotive engines that are being produced conform to the provisions of this part. As part of this allowance or for other reasons, the Administrator may waive some or all of the requirements of this subpart.

[63 FR 18998, Apr. 16, 1998, as amended at 65 FR 73331, Dec. 29, 1999]

§ 92.504 Right of entry and access.

(a) To allow the Administrator to determine whether a manufacturer or remanufacturer is complying with the provisions of this part, one or more EPA enforcement officers may enter during operating hours and upon presentation of credentials any of the following places:

(1) Any facility, including ports of entry, where any locomotive or locomotive engine is to be introduced into commerce or any emission-related component is manufactured, remanufactured, assembled, or stored;

(2) Any facility where any test or audit conducted pursuant to a manufacturer's or remanufacturer's production line testing or auditing program or any procedure or activity connected with such test or audit is or was performed;

(3) Any facility where any test locomotive or locomotive engine is present; and

(4) Any facility where any record required under § 92.509 or other document relating to this subpart is located.

(b) Upon admission to any facility referred to in paragraph (a) of this section, EPA enforcement officers are authorized to perform the following inspection-related activities:

(1) To inspect and monitor any aspect of locomotive or locomotive engine manufacture, remanufacture, assembly, storage, testing and other procedures, and to inspect and monitor the facilities in which these procedures are conducted;

(2) To inspect and monitor any aspect of locomotive or locomotive engine test procedures or activities, including test locomotive or engine selection, preparation and service accumulation, emission test cycles, and maintenance and verification of test equipment calibration;

(3) To inspect and make copies of any records or documents related to the assembly, storage, selection, and testing of a locomotive or locomotive engine; and

(4) To inspect and photograph any part or aspect of any locomotive or locomotive engine and any component used in the assembly thereof that is reasonably related to the purpose of the entry.

(c) EPA enforcement officers are authorized to obtain reasonable assistance without cost from those in charge

of a facility to help the officers perform any function listed in this subpart and they are authorized to request the manufacturer or remanufacturer to make arrangements with those in charge of a facility operated for the manufacturer or remanufacturer's benefit to furnish reasonable assistance without cost to EPA.

(1) Reasonable assistance includes, but is not limited to, clerical, copying, interpretation and translation services; the making available on an EPA enforcement officer's request of personnel of the facility being inspected during their working hours to inform the EPA enforcement officer of how the facility operates and to answer the officer's questions; and the performance on request of emission tests on any locomotive or engine which is being, has been, or will be used for production line testing or auditing.

(2) By written request, signed by the Assistant Administrator for Air and Radiation or the Assistant Administrator for Enforcement and Compliance Assurance, and served on the manufacturer or remanufacturer, a manufacturer or remanufacturer may be compelled to cause the personal appearance of any employee at such a facility before an EPA enforcement officer. Any such employee who has been instructed by the manufacturer or remanufacturer to appear will be entitled to be accompanied, represented, and advised by counsel.

(d) EPA enforcement officers are authorized to seek a warrant or court order authorizing the EPA enforcement officers to conduct the activities authorized in this section, as appropriate, to execute the functions specified in this section. EPA enforcement officers may proceed ex parte to obtain a warrant or court order whether or not the EPA enforcement officers first attempted to seek permission from the manufacturer or remanufacturer or the party in charge of the facility(ies) in question to conduct the activities authorized in this section.

(e) A manufacturer or remanufacturer is responsible for locating its foreign testing, manufacturing, and remanufacturing facilities in jurisdictions where local law does not prohibit an EPA enforcement officer(s) from conducting the activities specified in this section. EPA will not attempt to make any inspections which it has been informed local foreign law prohibits.

EFFECTIVE DATE NOTE: At 63 FR 19060, Apr. 16, 1998, § 92.504 was added. This section contains information collection and recordkeeping requirements and will not become effective until approval has been given by the Office of Management and Budget.

§ 92.505 Sample selection for testing.

(a) At the start of each model year, the manufacturer or remanufacturer will begin to randomly select locomotives or locomotive engines from each engine family for production line testing at a rate of one percent. Each locomotive or locomotive engine will be selected from the end of the production line. Testing shall be performed throughout the entire model year to the extent possible.

(1) The required sample size for an engine family is the lesser of five tests per model year or one percent of projected annual production, with a minimum sample size for an engine family of one test per model year provided that no engine tested fails to meet applicable emission standards.

(2) Manufacturers and remanufacturers may elect to test additional locomotives or locomotive engines. All additional locomotives or locomotive engines must be tested in accordance with the applicable test procedures of this part.

(b) The manufacturer or remanufacturer must assemble the test locomotives or locomotive engines using the same mass production process that will be used for locomotives or locomotive engines to be introduced into commerce.

(c) No quality control, testing, or assembly procedures will be used on any test locomotive or locomotive engine or any portion thereof, including parts and subassemblies, that have not been or will not be used during the production and assembly of all other locomotives or locomotive engines of that family, except with the approval of the Administrator.

§ 92.506 Test procedures.

(a)(1) For locomotives and locomotive engines subject to the provisions of this subpart, the prescribed test procedures are those procedures described in subpart B of this part, except as provided in this section.

(2) The Administrator may, on the basis of a written application by a manufacturer or remanufacturer, prescribe test procedures other than those specified in paragraph (a)(1) of this section for any locomotive or locomotive engine he/she determines is not susceptible to satisfactory testing using procedures specified in paragraph (a)(1) of this section.

(3) If test procedures other than those in subpart B were used in certification of the engine family being tested under this subpart (other than alternate test procedures necessary for testing of a development engine instead of a low mileage locomotive or a low hour engine under § 92.9), the manufacturer or remanufacturer shall use the test procedures used in certification for production line testing.

(b)(1) The manufacturer or remanufacturer may not adjust, repair, prepare, modify, or perform any emission test on, any test locomotive or locomotive engine unless this adjustment, repair, preparation, modification and/or test is documented in the manufacturer's or remanufacturer's locomotive or engine assembly and inspection procedures and is actually performed by the manufacturer or remanufacturer or unless this adjustment, repair, preparation, modification and/or test is required or permitted under this subpart or is approved in advance by the Administrator.

(2) Any adjustable locomotive or locomotive engine parameter must be set to values or positions that are within the range recommended to the ultimate purchaser.

(3) The Administrator may adjust or require to be adjusted any engine parameter which the Administrator has determined to be subject to adjustment for certification and production line testing, to any setting within the specified adjustable range of that parameter, as determined by the Administrator, prior to the performance of any test.

(c) *Service Accumulation/Green Engine factor*. The manufacturer or remanufacturer shall accumulate service on the locomotives and locomotive engines to be tested up to 300 hours of operation. In lieu of conducting such service accumulation, the manufacturer or remanufacturer may establish a Green Engine factor for each regulated pollutant for each engine family to be used in calculating emissions test results. The manufacturer or remanufacturer shall obtain the approval of the Administrator prior to using a Green Engine factor.

(d) The manufacturer or remanufacturer may not perform any maintenance on test locomotives or locomotive engines after selection for testing.

(e) If a locomotive or locomotive engine is shipped to a facility other than the production facility for production line testing, and an adjustment or repair is necessary because of such shipment, the locomotive or locomotive engine manufacturer or remanufacturer must perform the necessary adjustment or repair only after the initial test of the locomotive or locomotive engine, except where the Administrator has determined that the test would be impossible to perform or would permanently damage the locomotive engine.

(f) If a locomotive or locomotive engine cannot complete the service accumulation, if applicable, or an emission test, because of a malfunction, the manufacturer or remanufacturer may request that the Administrator authorize either the repair of that locomotive or locomotive engine or its deletion from the test sequence.

(g) Retesting. (1) If a locomotive or locomotive engine manufacturer or remanufacturer determines that any production line emission test of a locomotive or locomotive engine is invalid, the locomotive or locomotive engine must be retested in accordance with the requirements of this subpart. Emission results from all tests must be reported to EPA, including test results the manufacturer or remanufacturer determines are invalid. The locomotive or locomotive engine manufacturer or

remanufacturer must also include a detailed explanation of the reasons for invalidating any test in the quarterly report required in § 92.508(e). In the event a retest is performed, a request may be made to the Administrator, within ten days of the end of the production quarter, for permission to substitute the after-repair test results for the original test results. The Administrator will either affirm or deny the request by the locomotive or locomotive engine manufacturer or remanufacturer within ten working days from receipt of the request.

[63 FR 18998, Apr. 16, 1998, as amended at 65 FR 73331, Dec. 29, 1999]

§ 92.507 Sequence of testing.

If one or more locomotives or locomotive engines fail a production line test, then the manufacturer or remanufacturer must test two additional locomotives or locomotive engines from the next fifteen produced in that engine family, for each locomotive or locomotive engine that fails.

§ 92.508 Calculation and reporting of test results.

(a) Manufacturers and remanufacturers shall calculate initial test results using the applicable test procedure specified in § 92.506(a). These results must also include the green engine factor, if applicable. The manufacturer or remanufacturer shall round these results, in accordance with ASTM E29–93a (incorporated by reference at § 92.5), to the number of decimal places contained in the applicable emission standard expressed to one additional significant figure.

(b) Final test results shall be calculated by summing the initial test results derived in paragraph (a) of this section for each test locomotive or locomotive engine, dividing by the number of tests conducted on the locomotive or locomotive engine, and rounding in accordance with ASTM E29–93a (incorporated by reference at § 92.5) to the same number of decimal places contained in the applicable standard expressed to one additional significant figure.

(c) Manufacturers and remanufacturers shall calculate the final test results for each test locomotive or locomotive engine by applying the appropriate deterioration factors, derived in the certification process for the engine family, to the final test results, and rounding in accordance with ASTM E 29–93a (incorporated by reference at § 92.5) to the same number of decimal places contained in the applicable standard expressed to one additional significant figure.

(d) If, subsequent to an initial failure of a production line test, the average of the test results for the failed locomotive or locomotive engine and the two additional locomotives or locomotive engines tested, is greater than any applicable emission standard or FEL, the engine family is deemed to be in non-compliance with applicable emission standards, and the manufacturer or remanufacturer must notify EPA within 2 working days of such noncompliance.

(e) Within 45 calendar days of the end of each quarter, each manufacturer or remanufacturer must submit to the Administrator a report which includes the following information:

(1) The location and description of the manufacturer's or remanufacturer's emission test facilities which were utilized to conduct testing reported pursuant to this section;

(2) Total production and sample size for each engine family;

(3) The applicable standards and/or FELs against which each engine family was tested;

(4) A description of the test locomotives or locomotive engines;

(5) For each test conducted:

(i) A description of the test locomotive or locomotive engine, including:

(A) Configuration and engine family identification;

(B) Year, make, and build date;

(C) Engine identification number;

(D) Number of megawatt-hours (or miles if applicable) of service accumulated on locomotive or locomotive engine prior to testing; and

(E) Description of green engine factor; how it is determined and how it is applied;

(ii) Location(s) where service accumulation was conducted and description of accumulation procedure and schedule, if applicable;

(iii) Test number, date, test procedure used, initial test results before and after rounding, and final test results for all production line emission tests conducted, whether valid or invalid, and the reason for invalidation of any test results, if applicable;

(iv) A complete description of any adjustment, modification, repair, preparation, maintenance, and testing which was performed on the test locomotive or locomotive engine, has not been reported pursuant to any other paragraph of this subpart, and will not be performed on other production locomotive or locomotive engines;

(v) Any other information the Administrator may request relevant to the determination whether the new locomotives or locomotive engines being manufactured or remanufactured by the manufacturer or remanufacturer do in fact conform with the regulations with respect to which the certificate of conformity was issued;

(6) For each failed locomotive or locomotive engine as defined in § 92.510(a), a description of the remedy and test results for all retests as required by § 92.512(g);

(7) The date of the end of the locomotive or locomotive engine manufacturer's model year production for each engine family tested; and

(8) The following signed statement and endorsement by an authorized representative of the manufacturer or remanufacturer:

This report is submitted pursuant to Sections 213 and 208 of the Clean Air Act. This production line testing program was conducted in complete conformance with all applicable regulations under 40 CFR part 92. No emission-related changes to production processes or quality control procedures for the engine family tested have been made during this production line testing program that affect locomotives or locomotive engines from the production line. All data and information reported herein is, to the best of (Company Name) knowledge, true and accurate. I am aware of the penalties associated with violations of the Clean Air Act and the regulations thereunder. (Authorized Company Representative.)

[63 FR 18998, Apr. 16, 1998, as amended at 70 FR 40456, July 13, 2005]

§ 92.509 Maintenance of records; submittal of information.

(a) The manufacturer or remanufacturer for any new locomotive or locomotive engine subject to any of the provisions of this subpart must establish, maintain, and retain the following adequately organized and indexed records:

(1) *General records.* A description of all equipment used to test engines in accordance with § 92.503. The equipment requirements in subpart B of this part apply to tests performed under this subpart.

(2) Individual records. These records pertain to each production line test or audit conducted pursuant to this subpart and include:

(i) The date, time, and location of each test or audit;

(ii) The method by which the green engine factor was calculated or the number of hours of service accumulated on the test locomotive or locomotive engine when the test began and ended;

(iii) The names of all supervisory personnel involved in the conduct of the production line test or audit;

(iv) A record and description of any adjustment, repair, preparation or modification performed on test locomotives or locomotive engines, giving the date, associated time, justification, name(s) of the authorizing personnel, and names of all supervisory personnel responsible for the conduct of the action;

(v) If applicable, the date the locomotive or locomotive engine was shipped from the assembly plant, associated storage facility or port facility, and the date the locomotive or locomotive engine was received at the testing facility;

(vi) A complete record of all emission tests or audits performed pursuant to this subpart (except tests performed directly by EPA), including all individual worksheets and/or other documentation relating to each test, or exact copies thereof, in accordance with the record requirements specified in subpart B of this part;

(vii) A brief description of any significant events during testing not otherwise described under this paragraph (a)(2) of this section , commencing with

the test locomotive or locomotive engine selection process and including such extraordinary events as engine damage during shipment.

(3) The manufacturer or remanufacturer must establish, maintain and retain general records, pursuant to paragraph (a)(1) of this section, for each test cell that can be used to perform emission testing under this subpart.

(b) The manufacturer or remanufacturer must retain all records required to be maintained under this subpart for a period of eight (8) years after completion of all testing. Records may be retained as hard copy (i.e., on paper) or reduced to microfilm, floppy disk, or some other method of data storage, depending upon the manufacturer's or remanufacturer's record retention procedure; provided, that in every case, all the information contained in the hard copy is retained.

(c) The manufacturer or remanufacturer must, upon request by the Administrator, submit the following information with regard to locomotive or locomotive engine production:

(1) Projected production for each configuration within each engine family for which certification has been requested and/or approved.

(2) Number of locomotives or engines, by configuration and assembly plant, scheduled for production.

(d) Nothing in this section limits the Administrator's discretion to require a manufacturer or remanufacturer to establish, maintain, retain or submit to EPA information not specified by this section.

(e) All reports, submissions, notifications, and requests for approval made under this subpart must be addressed to: Group Manager, Engine Compliance Programs Group, Engine Programs and Compliance Division 6403-J, U.S. Environmental Protection Agency, 1200 Pennsylvania Ave, NW., Washington, DC 20460.

(f) The manufacturer or remanufacturer must electronically submit the results of its production line testing or auditing using an EPA information format.

§ 92.510 Compliance with criteria for production line testing.

(a) A failed locomotive or locomotive engine is one whose final test results pursuant to § 92.508(c), for one or more of the applicable pollutants, exceed the applicable emission standard or FEL.

(b) An engine family is deemed to be in noncompliance, for purposes of this subpart, if at any time throughout the model year, the average of an initial failed locomotive or locomotive engine and the two additional locomotives or locomotive engines tested, is greater than any applicable emission standard or FEL.

§ 92.511 Remanufactured locomotives: installation audit requirements.

(a) Remanufacturers of locomotives or locomotive engines shall audit the remanufacture of locomotives covered by its certificate(s) of conformity for proper components, component settings and component installations on randomly chosen locomotives in an engine family. Such audits shall be conducted in compliance with the requirements of this section.

(1) The remanufacturer must ensure that all emission related components are properly installed on the locomotive or locomotive engine.

(2) The remanufacturer must ensure that all emission related components are set to the proper specification as indicated in the remanufacture instructions.

(3) Remanufacturers are allowed to submit audits performed by the owners or operators of the locomotives, provided the audits are performed in accordance with the provisions of this section.

(b)(1) The required initial sample size (i.e., the sample size if no failures occur) for each remanufacturer is five percent of the remanufacturer's annual sales per model year per installer, with a maximum number of ten per engine family per installer.

(2) The locomotives audited shall be randomly selected after the remanufacture is complete. The Administrator may allow the locomotives to be selected prior to the completion of the remanufacture, where such preselection would not have the potential to affect the manner in which the

locomotive was remanufactured (e.g., where the installer is not aware of the selection prior to the completion of the remanufacture).

(c) The remanufactured locomotive or locomotive engine may accumulate no more than 10,000 miles prior to an audit.

(d) A failed remanufactured locomotive or locomotive engine is one on which any remanufacture components are found to be improperly installed, improperly adjusted or incorrectly used.

(e) If a remanufactured locomotive or locomotive engine fails an audit, then the remanufacturer must audit two additional locomotives or locomotive engines from the next ten remanufactured in that engine family by that installer.

(f) An engine family is determined to have failed an audit, if at any time during the model year, the remanufacturer determines that the three locomotives audited are found to have had any improperly installed, improperly adjusted or incorrectly used components. The remanufacturer must notify EPA within 2 working days of a determination of an engine family audit failure.

(g) Within 45 calendar days of the end of each quarter, each remanufacturer must submit to the Administrator a report which includes the following information:

(1) The location and description of the remanufacturer's audit facilities which were utilized to conduct auditing reported pursuant to this section;

(2) Total production and sample size for each engine family;

(3) The applicable standards and/or FELs against which each engine family was audited;

(4) For each audit conducted:

(i) A description of the audit locomotive or locomotive engine, including:

(A) Configuration and engine family identification;

(B) Year, make, build date, and remanufacturer date; and

(C) Engine identification number;

(ii) Any other information the Administrator may request relevant to the determination whether the new locomotives or locomotive engines being manufactured or remanufactured by the remanufacturer do in fact conform with the regulations in this part with respect to which the certificate of conformity was issued;

(5) For each failed locomotive or locomotive engine as defined in paragraph (d) of this section, a description of the remedy as required by § 92.512(g);

(6) The following signed statement and endorsement by an authorized representative of the remanufacturer:

This report is submitted pursuant to Sections 213 and 208 of the Clean Air Act. This production line auditing program was conducted in complete conformance with all applicable regulations under 40 CFR part 92. No emission-related changes to production processes or quality control procedures for the engine family audited have been made during this production line auditing program that affect locomotives or locomotive engines from the production line. All data and information reported herein is, to the best of (Company Name) knowledge, true and accurate. I am aware of the penalties associated with violations of the Clean Air Act and the regulations thereunder. (Authorized Company Representative.)

[63 FR 18998, Apr. 16, 1998, as amended at 70 FR 40456, July 13, 2005]

§ 92.512 Suspension and revocation of certificates of conformity.

(a)(1) The certificate of conformity is suspended with respect to any locomotive or locomotive engine that fails a production line test pursuant to § 92.510(a), effective from the time the testing of that locomotive or locomotive engine is completed.

(2) The certificate of conformity is suspended with respect to any locomotive or locomotive engine that fails an audit pursuant to § 92.511(d), effective from the time that auditing of that locomotive or locomotive engine is completed.

(b)(1) The Administrator may suspend the certificate of conformity for an engine family which is in noncompliance pursuant to § 92.510(b), thirty days after the engine family is deemed to be in noncompliance.

(2) The Administrator may suspend the certificate of conformity for an engine family which is determined to have failed an audit pursuant to § 92.511(f). This suspension will not

occur before thirty days after the engine family is deemed to be in noncompliance.

(c) If the results of testing or auditing pursuant to these regulations indicate that locomotives or engines of a particular family produced at one plant of a manufacturer or remanufacturer do not conform to the regulations with respect to which the certificate of conformity was issued, the Administrator may suspend the certificate of conformity with respect to that family for locomotives or locomotive engines manufactured or remanufactured by the manufacturer or remanufacturer at all other plants.

(d) The Administrator may suspend a certificate of conformity for any locomotive or locomotive engine family in whole or in part if:

(1) The manufacturer or remanufacturer fails to comply with any of the requirements of this subpart.

(2) The manufacturer or remanufacturer submits false or incomplete information in any report or information provided to the Administrator under this subpart.

(3) The manufacturer or remanufacturer renders inaccurate any test data submitted under this subpart.

(4) An EPA enforcement officer is denied the opportunity to conduct activities authorized in this subpart.

(5) An EPA enforcement officer is unable to conduct activities authorized in § 92.504 for any reason.

(e) The Administrator shall notify the manufacturer or remanufacturer in writing of any suspension or revocation of a certificate of conformity in whole or in part; a suspension or revocation is effective upon receipt of such notification or thirty days from the time an engine family is deemed to be in noncompliance under §§ 92.508(d), 92.510(a), 92.510(b) or 92.511(f), whichever is earlier, except that the certificate is immediately suspended with respect to any failed locomotives or locomotive engines as provided for in paragraph (a) of this section.

(f) The Administrator may revoke a certificate of conformity for an engine family when the certificate has been suspended pursuant to paragraph (b) or (c) of this section if the remedy is one requiring a design change or changes to the locomotive, engine and/or emission control system as described in the application for certification of the affected engine family.

(g) Once a certificate has been suspended for a failed locomotive or locomotive engine, as provided for in paragraph (a) of this section, the manufacturer or remanufacturer must take the following actions before the certificate is reinstated for that failed locomotive or locomotive engine:

(1) Remedy the nonconformity;

(2) Demonstrate that the locomotive or locomotive engine conforms to applicable standards or family emission limits by retesting, or reauditing if applicable, the locomotive or locomotive engine in accordance with this part; and

(3) Submit a written report to the Administrator, after successful completion of testing, or auditing if applicable, on the failed locomotive or locomotive engine, which contains a description of the remedy and test (or audit) results for each locomotive or engine in addition to other information that may be required by this part.

(h) Once a certificate for a failed engine family has been suspended pursuant to paragraph (b) or (c) of this section, the manufacturer or remanufacturer must take the following actions before the Administrator will consider reinstating the certificate:

(1) Submit a written report to the Administrator which identifies the reason for the noncompliance of the locomotives or locomotive engines, describes the remedy, including a description of any quality control and/or quality assurance measures to be taken by the manufacturer or remanufacturer to prevent future occurrences of the problem, and states the date on which the remedies will be implemented.

(2) Demonstrate that the engine family for which the certificate of conformity has been suspended does in fact comply with the regulations of this part by testing, or auditing if applicable, locomotives or engines selected from normal production runs of that engine family. Such testing (or auditing) must comply with the provisions of this subpart. If the manufacturer or

remanufacturer elects to continue testing, or auditing if applicable, individual locomotives or engines after suspension of a certificate, the certificate is reinstated for any locomotive or engine actually determined to be in conformance with the applicable standards or family emission limits through testing, or auditing if applicable, in accordance with the applicable test procedures, provided that the Administrator has not revoked the certificate pursuant to paragraph (f) of this section.

(i) Once the certificate has been revoked for an engine family, if the manufacturer or remanufacturer desires to continue introduction into commerce of a modified version of that family, the following actions must be taken before the Administrator may issue a certificate for that modified family:

(1) If the Administrator determines that the change(s) in locomotive or engine design may have an effect on emission performance deterioration, the Administrator shall notify the manufacturer or remanufacturer, within five working days after receipt of the report in paragraph (g) of this section, whether subsequent testing or auditing if applicable, under this subpart will be sufficient to evaluate the change or changes or whether additional testing or auditing will be required; and

(2) After implementing the change or changes intended to remedy the nonconformity, the manufacturer or remanufacturer must demonstrate that the modified engine family does in fact conform with the regulations of this part by testing, or auditing if applicable, locomotives or engines selected from normal production runs of that engine family. When both of these requirements are met, the Administrator shall reissue the certificate or issue a new certificate, as the case may be, to include that family. If this subsequent testing, or auditing if applicable, reveals failing data the revocation remains in effect.

(j) At any time subsequent to an initial suspension of a certificate of conformity for a test or audit locomotive or engine pursuant to paragraph (a) of this section, but not later than 30 days (or such other period as may be allowed by the Administrator) after notification of the Administrator's decision to suspend or revoke a certificate of conformity in whole or in part pursuant to paragraphs (b), (c), or (f) of this section, a manufacturer or remanufacturer may request a hearing as to whether the tests or audits have been properly conducted or any sampling methods have been properly applied.

(k) Any suspension of a certificate of conformity under paragraphs (a), (b), (c) and (d) of this section:

(1) Shall be made only after the manufacturer or remanufacturer concerned has been offered an opportunity for a hearing conducted in accordance with §§ 92.513, 92.514, and 92.515 and

(2) Need not apply to locomotives or engines no longer in the possession of the manufacturer or remanufacturer.

(l) After the Administrator suspends or revokes a certificate of conformity pursuant to this section or voids a certificate of conformity under § 92.215, and prior to the commencement of a hearing under § 92.513, if the manufacturer or remanufacturer demonstrates to the Administrator's satisfaction that the decision to suspend, revoke, or void the certificate was based on erroneous information, the Administrator shall reinstate the certificate.

(m) To permit a manufacturer or remanufacturer to avoid storing non-test locomotives or locomotive engines while conducting subsequent testing or auditing of the noncomplying family, a manufacturer or remanufacturer may request that the Administrator conditionally reinstate the certificate for that family. The Administrator may reinstate the certificate subject to the following condition: the manufacturer or remanufacturer must commit to recall all locomotives or locomotive engines of that family produced from the time the certificate is conditionally reinstated if the family fails subsequent testing, or auditing if applicable, and must commit to remedy any nonconformity at no expense to the owner.

[63 FR 18998, Apr. 16, 1998, as amended at 70 FR 40457, July 13, 2005]

§ 92.513 Request for public hearing.

(a) If the manufacturer or remanufacturer disagrees with the Administrator's decision to suspend or revoke a

certificate or disputes the basis for an automatic suspension pursuant to § 92.512(a), the manufacturer or remanufacturer may request a public hearing.

(b) The manufacturer's or remanufacturer's request shall be filed with the Administrator not later than 30 days after the Administrator's notification of his or her decision to suspend or revoke, unless otherwise specified by the Administrator. The manufacturer or remanufacturer shall simultaneously serve two copies of this request upon the Director of the Engine Programs and Compliance Division, Office of Mobile Sources and file two copies with the Hearing Clerk of the Agency. Failure of the manufacturer or remanufacturer to request a hearing within the time provided constitutes a waiver of the right to a hearing. Subsequent to the expiration of the period for requesting a hearing as of right, the Administrator may, in his or her discretion and for good cause shown, grant the manufacturer or remanufacturer a hearing to contest the suspension or revocation.

(c) A manufacturer or remanufacturer shall include in the request for a public hearing:

(1) A statement as to which configuration(s) within a family is to be the subject of the hearing;

(2) A concise statement of the issues to be raised by the manufacturer or remanufacturer at the hearing, except that in the case of the hearing requested under § 92.512(j), the hearing is restricted to the following issues:

(i) Whether tests or audits have been properly conducted (specifically, whether the tests were conducted in accordance with applicable regulations under this part and whether test equipment was properly calibrated and functioning);

(ii) Whether there exists a basis for distinguishing locomotives or locomotive engines produced at plants other than the one from which locomotives or locomotive engines were selected for testing or auditing which would invalidate the Administrator's decision under § 92.512(c));

(3) A statement specifying reasons why the manufacturer or remanufacturer believes it will prevail on the merits of each of the issues raised; and

(4) A summary of the evidence which supports the manufacturer's or remanufacturer's position on each of the issues raised.

(d) A copy of all requests for public hearings will be kept on file in the Office of the Hearing Clerk and will be made available to the public during Agency business hours.

§ 92.514 Administrative procedures for public hearing.

(a) The Presiding Officer shall be an Administrative Law Judge appointed pursuant to 5 U.S.C. 3105 (see also 5 CFR part 930).

(b) The Judicial Officer shall be an officer or employee of the Agency appointed as a Judicial Officer by the Administrator, pursuant to this section, who shall meet the qualifications and perform functions as follows:

(1) *Qualifications.* A Judicial Officer may be a permanent or temporary employee of the Agency who performs other duties for the Agency. The Judicial Officer shall not be employed by the Office of Enforcement or have any connection with the preparation or presentation of evidence for a hearing held pursuant to this subpart. The Judicial Officer shall be a graduate of an accredited law school and a member in good standing of a recognized Bar Association of any state or the District of Columbia.

(2) *Functions.* The Administrator may consult with the Judicial Officer or delegate all or part of the Administrator's authority to act in a given case under this section to a Judicial Officer, provided that this delegation does not preclude the Judicial Officer from referring any motion or case to the Administrator when the Judicial Officer determines such referral to be appropriate.

(c) For the purposes of this section, one or more Judicial Officers may be designated by the Administrator. As work requires, a Judicial Officer may be designated to act for the purposes of a particular case.

(d) *Summary decision.* (1) In the case of a hearing requested under § 92.512(j), when it clearly appears from the data and other information contained in the

request for a hearing that no genuine and substantial question of fact or law exists with respect to the issues specified in § 92.513(c)(2), the Administrator may enter an order denying the request for a hearing and reaffirming the original decision to suspend or revoke a certificate of conformity.

(2) In the case of a hearing requested under § 92.513 to challenge a suspension of a certificate of conformity for the reason(s) specified in § 92.512(d), when it clearly appears from the data and other information contained in the request for the hearing that no genuine and substantial question of fact or law exists with respect to the issue of whether the refusal to comply with this subpart was caused by conditions and circumstances outside the control of the manufacturer or remanufacturer, the Administrator may enter an order denying the request for a hearing and suspending the certificate of conformity.

(3) Any order issued under paragraph (d)(1) or (d)(2) of this section has the force and effect of a final decision of the Administrator, as issued pursuant to § 92.516.

(4) If the Administrator determines that a genuine and substantial question of fact or law does exist with respect to any of the issues referred to in paragraphs (d)(1) and (d)(2) of this section, the Administrator shall grant the request for a hearing and publish a notice of public hearing in the FEDERAL REGISTER or by such other means as the Administrator finds appropriate to provide notice to the public.

(e) *Filing and service.* (1) An original and two copies of all documents or papers required or permitted to be filed pursuant to this section and § 92.513(c) must be filed with the Hearing Clerk of the Agency. Filing is considered timely if mailed, as determined by the postmark, to the Hearing Clerk within the time allowed by this section and § 92.513(b). If filing is to be accomplished by mailing, the documents must be sent to the address set forth in the notice of public hearing referred to in paragraph (d)(4) of this section.

(2) To the maximum extent possible, testimony will be presented in written form. Copies of written testimony will be served upon all parties as soon as practicable prior to the start of the hearing. A certificate of service will be provided on or accompany each document or paper filed with the Hearing Clerk. Documents to be served upon the Director of the Engine Programs and Compliance Division must be sent by registered mail to: Director, Engine Programs and Compliance Division 6403–J, U.S. Environmental Protection Agency, 1200 Pennsylvania Ave., NW., Washington, DC 20460. Service by registered mail is complete upon mailing.

(f) *Computation of time.* (1) In computing any period of time prescribed or allowed by this section, except as otherwise provided, the day of the act or event from which the designated period of time begins to run is not included. Saturdays, Sundays, and federal legal holidays are included in computing the period allowed for the filing of any document or paper, except that when the period expires on a Saturday, Sunday, or federal legal holiday, the period is extended to include the next following business day.

(2) A prescribed period of time within which a party is required or permitted to do an act is computed from the time of service, except that when service is accomplished by mail, three days will be added to the prescribed period.

(g) *Consolidation.* The Administrator or the Presiding Officer in his or her discretion may consolidate two or more proceedings to be held under this section for the purpose of resolving one or more issues whenever it appears that consolidation will expedite or simplify consideration of these issues. Consolidation does not affect the right of any party to raise issues that could have been raised if consolidation had not occurred.

(h) *Hearing date.* To the extent possible hearings under § 92.513 will be scheduled to commence within 14 days of receipt of the request for a hearing.

§ 92.515 Hearing procedures.

The procedures provided in § 86.1014–84(i) through (s) of this chapter apply for hearings requested pursuant to § 92.513 regarding suspension, revocation, or voiding of a certificate of conformity.

§ 92.516 Appeal of hearing decision.

The procedures provided in § 86.1014–84(t) through (aa) of this chapter apply for appeals filed with respect to hearings held pursuant to § 92.515.

§ 92.517 Treatment of confidential information.

Except for information required by § 92.508(e)(2) and quarterly emission test results described in § 92.508(e), information submitted pursuant to this subpart shall be made available to the public by EPA notwithstanding any claim of confidentiality made by the submitter. The provisions for treatment of confidential information described in § 92.4 apply to the information required by § 92.508(e)(2) and all other information submitted pursuant to this subpart.

Subpart G—In-Use Testing Program

§ 92.601 Applicability.

The requirements of this subpart are applicable to all manufacturers and remanufacturers of locomotives subject to the provisions of subpart A of this part, including all locomotives powered by any locomotive engines subject to the provisions of subpart A of this part.

§ 92.602 Definitions.

Except as otherwise provided, the definitions in subpart A of this part apply to this subpart.

§ 92.603 General provisions.

(a) EPA shall annually identify engine families and configurations within families on which the manufacturer or remanufacturer must conduct in-use emissions testing pursuant to the requirements of this section.

(1) Manufacturers and remanufacturers shall test one locomotive engine family each year for which it has received a certificate of conformity from EPA. Where a manufacturer holds certificates of conformity for both freshly manufactured and remanufactured locomotive engine families, the Administrator may require the manufacturer to test one freshly manufactured engine family and one remanufactured engine family. The Administrator may require a manufacturer or remanufacturer to test additional engine families if he/she has reason to believe that locomotives in an engine family do not comply with emission standards in use.

(2) For engine families of less than 10 locomotives per year, no in-use testing will be required, unless the Administrator has reason to believe that those engine families are not complying with the applicable emission standards in use.

(b) Locomotive manufacturers or remanufacturers shall perform emission testing of a sample of in-use locomotives from an engine family, as specified in § 92.605. Manufacturers or remanufacturers shall submit data from this in-use testing to EPA. EPA will use these data, and any other data available to EPA, to determine the compliance status of classes of locomotives, including for purposes of subpart H of this part, and whether remedial action is appropriate.

§ 92.604 In-use test procedure.

(a) Testing conducted under this subpart shall be conducted on locomotives; testing under this subpart shall not be conducted using an engine that is not installed in a locomotive at the time of testing.

(b) Locomotives tested under this subpart shall be tested using the locomotive test procedures outlined in subpart B of this part, except as provided in this section.

(c) The test procedures used for in-use testing shall be consistent with the test procedures used for certification, except for cases in which certification testing was not conducted with locomotive, but with a development engine, or other engine. In such cases, the Administrator shall require deviations from the certification test procedures as appropriate, including requiring that the test be conducted on a locomotive. The Administrator may allow or require other alternate procedures, with advance approval. For all testing conducted under this subpart, emission rates shall be calculated in accordance with the provisions of subpart B of this part that apply to locomotive testing.

(d) Any adjustable locomotive or locomotive engine parameter must be set to values or positions that are within

the range specified in the certificate of conformity. If so directed by the Administrator, the manufacturer or remanufacturer will set these parameters to values specified by the Administrator.

(e) The Administrator may waive portions or requirements of the applicable test procedure, if any, that are not necessary to determine in-use compliance.

§ 92.605 General testing requirements.

(a) *Number of locomotives to be tested.* The manufacturer or remanufacturer shall test in-use locomotives, from an engine family selected by EPA, which have accumulated between one-half and three-quarters of the engine family's useful life. The number of locomotives to be tested by a manufacturer or remanufacturer will be determined by the following method:

(1) A minimum of 2 locomotives per engine family per year for each engine family that reaches the minimum age specified above provided that no locomotive tested fails to meet any applicable standard. For each failing locomotive, two more locomotives shall be tested until the total number of locomotives tested equals 10, except as provided in paragraph (a)(2) of this section.

(2) If an engine family has not changed from one year to the next and has certified using carry over emission data and has been previously tested under paragraph (a)(1) of this section (and EPA has not ordered or begun to negotiate remedial action of that family), then only one locomotive per engine family per year must be tested. If such locomotive fails to meet applicable standards for any pollutant, testing for that engine family must be conducted as outlined under paragraph (a)(1) of this section.

(b) At the discretion of the Administrator, a locomotive or locomotive engine manufacturer or remanufacturer may test more locomotives than the minima described above or may concede failure before locomotive number 10.

(c) The Administrator will consider failure rates, average emission levels and the existence of any defects among other factors in determining whether to pursue remedial action. The Administrator may order a recall pursuant to subpart H of this part before testing reaches the tenth locomotive.

(d) *Collection of in-use locomotives.* The locomotive manufacturer or remanufacturer shall procure in-use locomotives which have been operated for between one-half and three-quarters of the locomotive's useful life for testing under this subpart. The manufacturer or remanufacturer shall complete testing required by this section for any engine family before useful life of the locomotives in the engine family passes.

§ 92.606 Maintenance, procurement and testing of in-use locomotives.

(a) A test locomotive must have a maintenance history that is representative of actual in-use conditions, and identical or equivalent to the manufacturer's or remanufacturer's recommended emission-related maintenance requirements.

(1) In procuring in-use locomotives for in-use testing, a manufacturer or remanufacturer shall question the end users regarding the accumulated usage, maintenance, operating conditions, and storage of the test locomotives.

(2) The selection of test locomotives is made by the manufacturer or remanufacturer, and is subject to EPA approval. Information used by the manufacturer or remanufacturer to procure locomotives for in-use testing shall be maintained as required in § 92.215.

(b) The manufacturer or remanufacturer may perform minimal set-to-spec maintenance on a test locomotive prior to conducting in-use testing. Maintenance may include only that which is listed in the owner's instructions for locomotives with the amount of service and age of the acquired test locomotive. Documentation of all maintenance and adjustments shall be maintained and retained.

(c) Results of one valid emission test using the test procedure outlined in subpart B of this part is required for each in-use locomotive.

(d) If in-use testing results show that an in-use locomotive fails to comply with any applicable emission standards, the manufacturer or remanufacturer shall determine the reason for

noncompliance. The manufacturer or remanufacturer must report all determinations for noncompliance in its quarterly in-use test result report pursuant to § 92.607(a)(11).

EFFECTIVE DATE NOTE: At 63 FR 19066, Apr. 16, 1998, § 92.606 was added. This section contains information collection and recordkeeping requirements and will not become effective until approval has been given by the Office of Management and Budget.

§ 92.607 In-use test program reporting requirements.

(a) The manufacturer or remanufacturer shall submit to the Administrator within three (3) months of completion of testing all emission testing results generated from the in-use testing program. The following information must be reported for each locomotive tested:

(1) Engine family, and configuration;

(2) Locomotive and engine models;

(3) Locomotive and engine serial numbers;

(4) Date of manufacture and/or remanufacture(s), as applicable;

(5) Megawatt-hours of use (or miles, as applicable);

(6) Date and time of each test attempt;

(7) Results (if any) of each test attempt;

(8) Results of all emission testing;

(9) Summary of all maintenance and/or adjustments performed;

(10) Summary of all modifications and/or repairs;

(11) Determinations of noncompliance; and

(12) The following signed statement and endorsement by an authorized representative of the manufacturer or remanufacturer:

This report is submitted pursuant to Sections 213 and 208 of the Clean Air Act. This in-use testing program was conducted in complete conformance with all applicable regulations under 40 CFR part 92. All data and information reported herein is, to the best of (Company Name) knowledge, true and accurate. I am aware of the penalties associated with violations of the Clean Air Act and the regulations thereunder. (Authorized Company Representative.)

(b) The manufacturer or remanufacturer shall report to the Administrator within three (3) months of completion of testing the following information for each engine family tested:

(1) The serial numbers of all locomotive that were excluded from the test sample because they did not meet the maintenance requirements of § 92.606;

(2) The owner of each locomotive identified in paragraph (b)(1) of this section (or other entity responsible for the maintenance of the locomotive); and

(3) The specific reasons why the locomotives were excluded from the test sample.

(c) The manufacturer or remanufacturer must submit, via floppy disk, the information outlined in paragraphs (a) and (b) of this section using a pre-approved information heading. The Administrator may exempt manufacturers or remanufacturers from this requirement upon written request with supporting justification.

(d) All testing reports and requests for approvals made under this subpart shall be addressed to: Group Manager, Engine Compliance Programs Group, Engine Programs and Compliance Division, U.S. Environmental Protection Agency, 6403–J, 1200 Pennsylvania Ave., NW., Washington, DC 20460.

Subpart H—Recall Regulations

§ 92.701 Applicability.

The requirements of subpart H of this part are applicable to all manufacturers and remanufacturers of locomotives and locomotive engines subject to the provisions of subpart A of this part.

§ 92.702 Definitions.

The definitions of subpart A of this part apply to this subpart.

§ 92.703 Voluntary emissions recall.

(a) Prior to an EPA ordered recall, a manufacturer or remanufacturer may perform (without petition) a voluntary emissions recall pursuant to regulations in subpart E of this part. Such manufacturer or remanufacturer is subject to the reporting requirements in subpart E of this part.

(b) If a determination of nonconformity with the requirements of section 213 of the Act is made (i.e. if EPA orders a recall under the provisions of

section 207(c)), the manufacturer(s) or remanufacturer(s) will not have the option of an alternate remedial action and an actual recall would be required.

§ 92.704 Notice to manufacturer or remanufacturer of nonconformity; submission of remedial plan.

(a) The manufacturer or remanufacturer will be notified whenever the Administrator has determined that a substantial number of a class or category of locomotives or locomotive engines produced by that manufacturer or remanufacturer, although properly maintained and used, do not conform to the regulations prescribed under the Act in effect during, and applicable to the model year of such locomotives or locomotive engines. The notification will include a description of each class or category of locomotives or locomotive engines encompassed by the determination of nonconformity, will give the factual basis for the determination of nonconformity (except information previously provided the manufacturer or remanufacturer by the Agency), and will designate a date, no sooner than 45 days from the date of receipt of such notification, by which the manufacturer or remanufacturer shall have submitted a plan to remedy the nonconformity.

(b) Unless a hearing is requested pursuant to § 92.709, the remedial plan shall be submitted to the Administrator within the time limit specified in the Administrator's notification, provided that the Administrator may grant a manufacturer or remanufacturer an extension upon good cause shown.

(c) If a manufacturer or remanufacturer requests a public hearing pursuant to § 92.709, unless as a result of such hearing the Administrator withdraws his determination of nonconformity, the manufacturer or remanufacturer shall submit the remedial plan within 30 days of the end of such hearing.

§ 92.705 Remedial plan.

(a) When any manufacturer or remanufacturer is notified by the Administrator that a substantial number of any class or category of locomotives or locomotive engines, although properly maintained and used, do not conform to the applicable regulations of this part (including emission standards or family emission limits), the manufacturer or remanufacturer shall submit a plan to the Administrator to remedy such nonconformity. The plan shall contain the following:

(1) A description of each class or category of locomotive or locomotive engine to be recalled including the year(s) of manufacture or remanufacture, the make, the model, the calendar year and such other information as may be required to identify the locomotives or locomotive engines to be recalled.

(2) A description of the specific modifications, alterations, repairs, corrections, adjustments or other changes to be made to bring the locomotives or locomotive engines into conformity, including a brief summary of the data and technical studies which support the manufacturer's or remanufacturer's decision as to the particular remedial changes to be used in correcting the nonconformity.

(3) A description of the method by which the manufacturer or remanufacturer will determine the names and addresses of locomotive or locomotive engine owners.

(4) A description of the proper maintenance or use, if any, upon which the manufacturer or remanufacturer conditions eligibility for repair under the remedial plan, an explanation of the manufacturer's or remanufacturer's reasons for imposing any such condition, and a description of the proof to be required of a locomotive or locomotive engine owner to demonstrate compliance with any such condition. Eligibility may not be denied solely on the basis that the locomotive or locomotive engine owner used parts not manufactured or remanufactured by the original locomotive or locomotive engine manufacturer or remanufacturer, or had repairs not performed by such manufacturer or remanufacturer. No maintenance or use condition may be imposed unless it is, in the judgement of the Administrator, demonstrably related to preventing the nonconformity.

(5) A description of the procedure to be followed by locomotive or locomotive engine owners to obtain correction of the nonconformity. This shall include designation of the date on or after which the owner can have the nonconformity remedied, the time reasonably necessary to perform the labor required to correct the nonconformity, and the designation of facilities at which the nonconformity can be remedied: *Provided,* That repair shall be completed within a reasonable time designated by the Administrator from the date the owner first tenders his locomotive or locomotive engine after the date designated by the manufacturer or remanufacturer as the date on or after which the owner can have the nonconformity remedied.

(6) If some or all of the nonconforming locomotives or locomotive engines are to be remedied by persons other than authorized warranty agents of the manufacturer or remanufacturer, a description of the class of persons other than authorized warranty agents of the manufacturer or remanufacturer who will remedy the nonconformity, and a statement indicating that the participating members of the class will be properly equipped to perform such remedial action.

(7) Three copies of the letters of notification to be sent to locomotive or locomotive engine owners.

(8) A description of the system by which the manufacturer or remanufacturer will assure that an adequate supply of parts will be available to perform the repair under the remedial plan including the date by which an adequate supply of parts will be available to initiate the repair campaign, the percentage of the total parts requirement of each person who is to perform the repair under the remedial plan to be shipped to initiate the campaign, and the method to be used to assure the supply remains both adequate and responsive to owner demand.

(9) Three copies of all necessary instructions to be sent to those persons who are to perform the repair under the remedial plan.

(10) A description of the impact of the changes on fuel consumption, operability, and safety of each class or category of locomotives or locomotive engines to be recalled and a brief summary of the data, technical studies, or engineering evaluations which support these conclusions.

(11) Any other information, reports or data which the Administrator may reasonably determine is necessary to evaluate the remedial plan.

(b)(1) Notification to locomotive or locomotive engine owners shall be made by first class mail or by such means as approved by the Administrator.

(2) The manufacturer or remanufacturer shall use all reasonable means necessary to locate locomotive or locomotive engine owners.

(3) The Administrator reserves the right to require the manufacturer or remanufacturer to send by certified mail or other reasonable means subsequent notification to locomotive or locomotive engine owners.

(c)(1) The manufacturer or remanufacturer shall require those who perform the repair under the remedial plan to affix a label to each locomotive or locomotive engine repaired or, when required, inspected under the remedial plan.

(2) The label shall be placed in such location as approved by the Administrator consistent with Federal Railroad Administration regulations and shall be fabricated of a material suitable for the location in which it is installed and which is not readily removable intact.

(3) The label shall contain:

(i) The recall campaign number; and

(ii) A code designating the campaign facility at which the repair, or inspection for repair was performed.

(4) The Administrator reserves the right to waive any or all of the requirements of this paragraph (c) if he/she determines that they constitute an unwarranted burden to the manufacturer or remanufacturer.

(d) The Administrator may require the manufacturer or remanufacturer to conduct tests on components and locomotives or locomotive engines incorporating a change, repair, or modification reasonably designed and necessary to demonstrate the effectiveness of the change, repair, or modification.

NOTE TO § 92.705: An interpretive ruling regarding § 92.705 is published in Appendix II to this part.

§ 92.706 Approval of plan: Implementation.

(a) If the Administrator finds that the remedial plan is designed and effective to correct the nonconformity, he/she will so notify the manufacturer or remanufacturer in writing. If the remedial plan is not approved, the Administrator will provide the manufacturer or remanufacturer notice of the disapproval and the reasons for the disapproval in writing.

(b) Upon receipt of notice from the Administrator that the remedial plan has been approved, the manufacturer or remanufacturer shall commence implementation of the approved plan. Notification of locomotive or locomotive engine owners shall be in accordance with requirements of this subpart and shall proceed as follows:

(1) When no public hearing as described in § 92.709 is requested by the manufacturer or remanufacturer, notification of locomotive or locomotive engine owners shall commence within 15 working days of the receipt by the manufacturer or remanufacturer of the Administrator's approval unless otherwise specified by the Administrator.

(2) When a public hearing as described in § 92.709 is held, unless as a result of such hearing the Administrator withdraws the determination of nonconformity, the Administrator shall, within 60 days after the completion of such hearing, order the manufacturer or remanufacturer to provide prompt notification of such nonconformity.

§ 92.707 Notification to locomotive or locomotive engine owners.

(a) The notification of locomotive or locomotive engine owners shall contain the following:

(1) The statement: ''The Administrator of the U.S. Environmental Protection Agency has determined that your locomotive or locomotive engine may be emitting pollutants in excess of the federal emission standards or family emission limits, as defined in 40 CFR part 92. These standards or family emission limits, as defined in 40 CFR part 92 were established to protect the public health or welfare from the dangers of air pollution.''

(2) A statement that the nonconformity of any such locomotives or locomotive engines which have been, if required by the remedial plan, properly maintained and used, will be remedied at the expense of the manufacturer or remanufacturer.

(3) A description of the proper maintenance or use, if any, upon which the manufacturer or remanufacturer conditions eligibility for repair under the remedial plan and a description of the proof to be required of a locomotive or locomotive engine owner to demonstrate compliance with such condition. Eligibility may not be denied solely on the basis that the locomotive or locomotive engine owner used parts not manufactured or remanufactured by the manufacturer or remanufacturer, or had repairs not performed by the manufacturer or remanufacturer.

(4) A clear description of the components which will be affected by the remedy and a general statement of the measures to be taken to correct the nonconformity.

(5) A description of the adverse effects, if any, that an uncorrected nonconformity would have on the performance or operability of the locomotive or locomotive engine.

(6) A description of the adverse effects, if any, that such nonconformity would have on the performance or operability of the locomotive or locomotive engine.

(7) A description of the average effects, if any, that such nonconformity would have on the functions of other locomotive or locomotive engine components.

(8) A description of the procedure which the locomotive or locomotive engine owner should follow to obtain correction of the nonconformity. This shall include designation of the date on or after which the owner can have the nonconformity remedied, the time reasonably necessary to perform the labor required to correct the nonconformity, and the designation of facilities at which the nonconformity can be remedied.

(9) A telephone number provided by the manufacturer or remanufacturer,

which may be used to report difficulty in obtaining recall repairs.

(10) The statement: ''In order to ensure your full protection under the emission warranty made applicable to your (locomotive or locomotive engine) by federal law, and your right to participate in future recalls, it is recommended that you have (locomotive or locomotive engine) serviced as soon as possible. Failure to do so could legally be determined to be a lack of proper maintenance of your (locomotive or locomotive engine).''

(b) No notice sent pursuant to paragraph (a) of this section nor any other contemporaneous communication sent to locomotive or locomotive engine owners or dealers shall contain any statement or implication that the nonconformity does not exist or that the nonconformity will not degrade air quality.

(c) The manufacturer or remanufacturer shall be informed of any other requirements pertaining to the notification under this section which the Administrator has determined are reasonable and necessary to ensure the effectiveness of the recall campaign.

§ 92.708 Records and reports.

(a) The manufacturer or remanufacturer shall provide to the Administrator a copy of all communications which relate to the remedial plan directed to persons who are to perform the repair under the remedial plan. Such copies shall be mailed to the Administrator contemporaneously with their transmission to persons who are to perform the repair under the remedial plan.

(b) The manufacturer or remanufacturer shall provide for the establishment and maintenance of records to enable the Administrator to conduct a continuing analysis of the adequacy of the recall campaign. The records shall include, for each class or category of locomotive or locomotive engine, but need not be limited to, the following:

(1) Recall campaign number as designated by the manufacturer or remanufacturer.

(2) Date owner notification was begun, and date completed.

(3) Number of locomotives or locomotive engines involved in the recall campaign.

(4) Number of locomotives or locomotive engines known or estimated to be affected by the nonconformity.

(5) Number of locomotives or locomotive engines inspected pursuant to the remedial plan.

(6) Number of inspected locomotives or locomotive engines found to be affected by the nonconformity.

(7) Number of locomotives or locomotive engines actually receiving repair under the remedial plan.

(8) Number of locomotives or locomotive engines determined to be unavailable for inspection or repair under the remedial plan due to exportation, scrapping or for other reasons (specify).

(9) Number of locomotives or locomotive engines determined to be ineligible for remedial action due to a failure to properly maintain or use such locomotives or locomotive engines.

(c) If the manufacturer or remanufacturer determines that the original answers for paragraphs (b)(3) and (b)(4) of this section are incorrect, revised figures and an explanatory note shall be submitted. Answers to paragraphs (b)(5), (b)(6), (b)(7), (b)(8), and (b)(9) of this section shall be cumulative totals.

(d) Unless otherwise directed by the Administrator, the information specified in paragraph (b) of this section shall be included in quarterly reports, with respect to each recall campaign, for six consecutive quarters beginning with the quarter in which the notification of owners was initiated, or until all nonconforming locomotives or locomotive engines involved in the campaign have been remedied, whichever occurs sooner. Such reports shall be submitted no later than 25 working days after the close of each calendar quarter.

(e) The manufacturer or remanufacturer shall maintain in a form suitable for inspection, such as computer information storage devices or card files, lists of the names and addresses of locomotive or locomotive engine owners:

(1) To whom notification was given;

(2) Who received remedial repair or inspection under the remedial plan; and

(3) When eligibility for repair is conditioned on proper maintenance or use, that were determined not to qualify for such remedial action.

(f) The records described in paragraph (e) of this section shall be made available to the Administrator upon request.

(g) The records and reports required by this section shall be retained for not less than eight (8) years.

EFFECTIVE DATE NOTE: At 63 FR 19069, Apr. 16, 1998, § 92.708 was added. This section contains information collection and recordkeeping requirements and will not become effective until approval has been given by the Office of Management and Budget.

§ 92.709 Public hearings.

(a) *Definitions.* The following definitions shall be applicable to this section:

(1) *Hearing Clerk* shall mean the Hearing Clerk of the Environmental Protection Agency.

(2) *Intervenor* shall mean a person who files a petition to be made an intervenor pursuant to paragraph (g) of this section and whose petition is approved.

(3) *Manufacturer or remanufacturer* refers to a manufacturer or remanufacturer contesting a recall order directed at that manufacturer or remanufacturer.

(4) *Party* shall include the Environmental Protection Agency, the manufacturer or remanufacturer, and any intervenors.

(5) *Presiding Officer* shall mean an Administrative Law Judge appointed pursuant to 5 U.S.C. 3105 (see also 5 CFR part 930).

(6) *Environmental Appeals Board* shall mean the Board within the Agency described in § 1.25 of this chapter. The Administrator delegates authority to the Environmental Appeals Board to issue final decisions in appeals filed under this subpart. Appeals directed to the Administrator, rather than to the Environmental Appeals Board, will not be considered. This delegation of authority to the Environmental Appeals Board does not preclude the Environmental Appeals Board from referring an appeal or a motion filed under this subpart to the Administrator for decision when the Environmental Appeals Board, in its discretion, deems it appropriate to do so. When an appeal or motion is referred to the Administrator, all parties shall be so notified and the rules in this part referring to the Environmental Appeals Board shall be interpreted as referring to the Administrator.

(b) *Request for public hearing.* (1)(i) If the manufacturer or remanufacturer disagrees with the Administrator's finding of nonconformity he may request a public hearing as described in this section. Requests for such a hearing shall be filed with the Administrator not later than 45 days after the receipt of the Administrator's notification of nonconformity unless otherwise specified by the Administrator. Two copies of such request shall simultaneously be served upon the Director of the Engine Programs and Compliance Division and two copies filed with the Hearing Clerk. Failure of the manufacturer or remanufacturer to request a hearing within the time provided shall constitute a waiver of his right to such a hearing. In such a case, the manufacturer or remanufacturer shall carry out the recall order as required by § 92.705.

(ii) Subsequent to the expiration of the period for requesting a hearing as of right, the Administrator may, in his discretion and for good cause shown, grant the manufacturer or remanufacturer a hearing to contest the nonconformity.

(2) The request for a public hearing shall contain:

(i) A statement as to which classes or categories of locomotives or locomotive engines are to be the subject of the hearing;

(ii) A concise statement of the issues to be raised by the manufacturer or remanufacturer at the hearing for each class or category of locomotive or locomotive engine for which the manufacturer or remanufacturer has requested the hearing; and

(iii) A statement as to reasons the manufacturer or remanufacturer believes it will prevail on the merits on each of the issues so raised.

(3) A copy of all requests for public hearings shall be kept on file in the Office of the Hearing Clerk and shall be

made available to the public during Agency business hours.

(c) *Filing and service.* (1) An original and two copies of all documents or papers required or permitted to be filed pursuant to this section shall be filed with the Hearing Clerk. Filing shall be deemed timely if mailed, as determined by the postmark, to the Hearing Clerk within the time allowed by this section. If filing is to be accomplished by mailing, the documents shall be sent to the address set forth in the notice of public hearing as described in paragraph (f) of this section.

(2) Except for requests to commence a hearing, at the same time a party files with the Hearing Clerk any additional issues for consideration at the hearing or any written testimony, documents, papers, exhibits, or materials, to be introduced into evidence or papers filed in connection with any appeal, it shall serve upon all other parties copies thereof. A certificate of service shall be provided on or accompany each document or paper filed with the Hearing Clerk. Documents to be served upon the Director of the Engine Programs and Compliance Division shall be mailed to: Director, Engine Programs and Compliance Division 6403–J, U.S. Environmental Protection Agency, 1200 Pennsylvania Ave., NW., Washington, DC 20460. Service by mail is complete upon mailing.

(d) *Time.* (1) In computing any period of time prescribed or allowed by this section, except as otherwise provided, the day of the act or event from which the designated period of time begins to run shall not be included. Saturdays, Sundays, and Federal legal holidays shall be included in computing any such period allowed for the filing of any document or paper, except that when such period expires on a Saturday, Sunday, or Federal legal holiday, such period shall be extended to include the next following business day.

(2) A prescribed period of time within which a party is required or permitted to do an act shall be computed from the time of service, except that when service is accomplished by mail, three days shall be added to the prescribed period.

(e) *Consolidation.* The Administrator or the Presiding Officer in his discretion may consolidate two or more proceedings to be held under this section for the purpose of resolving one or more issues whenever it appears that such consolidation will expedite or simplify consideration of such issues. Consolidation shall not affect the right of any party to raise issues that could have been raised if consolidation had not occurred.

(f) *Notice of public hearings.* (1) Notice of a public hearing under this section shall be given by publication in the FEDERAL REGISTER. Notice will be given at least 30 days prior to the commencement of such hearings.

(2) The notice of a public hearing shall include the following information:

(i) The purpose of the hearing and the legal authority under which the hearing is to be held;

(ii) A brief summary of the Administrator's determination of nonconformity;

(iii) A brief summary of the manufacturer's or remanufacturer's basis for contesting the Administrator's determination of nonconformity;

(iv) Information regarding the time and location of the hearing and the address to which all documents required or permitted to be filed should be sent;

(v) The address of the Hearing Clerk to whom all inquiries should be directed and with whom documents are required to be filed;

(vi) A statement that all petitions to be made an intervenor must be filed with the Hearing Clerk within 25 days from the date of the notice of public hearing and must conform to the requirements of paragraph (g) of this section.

(3) The notice of public hearing shall be issued by the General Counsel.

(g) *Intervenors.* (1) Any person desiring to intervene in a hearing to be held under section 207(c)(1) of the Act shall file a petition setting forth the facts and reasons why he/she thinks he/she should be permitted to intervene.

(2) In passing upon a petition to intervene, the following factors, among other things, shall be considered by the Presiding Officer:

(i) The nature of the petitioner's interest including the nature and the extent of the property, financial, environmental protection, or other interest of the petitioner;

(ii) The effect of the order which may be entered in the proceeding on petitioner's interest;

(iii) The extent to which the petitioner's interest will be represented by existing parties or may be protected by other means;

(iv) The extent to which petitioner's participation may reasonably be expected to assist materially in the development of a complete record;

(v) The effect of the intervention on the Agency's statutory mandate.

(3) A petition to intervene must be filed within 25 days following the notice of public hearing under section 207(c)(1) of the Act and shall be served on all parties. Any opposition to such petition must be filed within five days of such service.

(4) All petitions to be made an intervenor shall be reviewed by the Presiding Officer using the criteria set forth in paragraph (g)(2) of this section and considering any oppositions to such petition. Where the petition demonstrates that the petitioner's interest is limited to particular issues, the Presiding Officer may, in granting such petition, limit petitioner's participation to those particular issues only.

(5) If the Presiding Officer grants the petition with respect to any or all issues, he/she shall so notify, or direct the Hearing Clerk to notify, the petitioner and all parties. If the Presiding Officer denies the petition he/she shall so notify, or direct the Hearing Clerk to notify, the petitioner and all parties and shall briefly state the reasons why the petition was denied.

(6) All petitions to be made an intervenor shall include an agreement by the petitioner, and any person represented by the petitioner, to be subject to examination and cross-examination and to make any supporting and relevant records available at its own expense upon the request of the Presiding Officer, on his/her own motion or the motion of any party or other intervenor. If the intervenor fails to comply with any such request, the Presiding Officer may in his/her discretion, terminate his/her status as an intervenor.

(h) *Intervention by motion*. Following the expiration of the time prescribed in paragraph (g) of this section for the submission of petitions to intervene in a hearing, any person may file a motion with the Presiding Officer to intervene in a hearing. Such a motion must contain the information and commitments required by paragraphs (g)(2) and (g)(6) of this section, and, in addition, must show that there is good cause for granting the motion and must contain a statement that the intervenor shall be bound by agreements, arrangements, and other determinations which may have been made in the proceeding.

(i) *Amicus Curiae*. Persons not parties to the proceedings wishing to file briefs may do so by leave of the Presiding Officer granted on motion. A motion for leave shall identify the interest of the applicant and shall state the reasons why the amicus brief is desirable.

(j) *Presiding Officer*. The Presiding Officer shall have the duty to conduct a fair and impartial hearing in accordance with 5 U.S.C. 554, 556 and 557, to take all necessary action to avoid delay in the disposition of the proceedings and to maintain order. He/she shall have all power consistent with Agency rule and with the Administrative Procedure Act (5 U.S.C. 551 *et seq.*) necessary to this end, including the following:

(1) To administer oaths and affirmations;

(2) To rule upon offers of proof and receive relevant evidence;

(3) To regulate the course of the hearings and the conduct of the parties and their counsel therein;

(4) To hold conferences for simplification of the issues or any other proper purpose;

(5) To consider and rule upon all procedural and other motions appropriate in such proceedings;

(6) To require the submission of direct testimony in written form with or without affidavit whenever, in the opinion of the Presiding Officer, oral testimony is not necessary for full and true disclosure of the facts. Testimony concerning the conduct and results of

tests and inspections may be submitted in written form;

(7) To enforce agreements and orders requiring access as authorized by law;

(8) To require the filing of briefs on any matter on which he/she is required to rule;

(9) To require any party or any witness, during the course of the hearing, to state his/her position on any issue;

(10) To take or cause depositions to be taken whenever the ends of justice would be served thereby;

(11) To make decisions or recommend decisions to resolve the disputed issues of the record of the hearing;

(12) To issue, upon good cause shown, protective orders as described in paragraph (n) of this section.

(k) *Conferences.* (1) At the discretion of the Presiding Officer, conferences may be held prior to or during any hearing. The Presiding Officer shall direct the Hearing Clerk to notify all parties and intervenors of the time and location of any such conference. At the discretion of the Presiding Officer, persons other than parties may attend. At a conference the Presiding Officer may:

(i) Obtain stipulations and admissions, receive requests and order depositions to be taken, identify disputed issues of fact and law, and require or allow the submission of written testimony from any witness or party;

(ii) Set a hearing schedule for as many of the following as are deemed necessary by the Presiding Officer:

(A) Oral and written statements;

(B) Submission of written direct testimony as required or authorized by the Presiding Officer;

(C) Oral direct and cross-examination of a witness where necessary as prescribed in paragraph (p) of this section;

(D) Oral argument, if appropriate;

(iii) Identify matters of which official notice may be taken;

(iv) Consider limitation of the number of expert and other witnesses;

(v) Consider the procedure to be followed at the hearing; and

(vi) Consider any other matter that may expedite the hearing or aid in the disposition of the issue.

(2) The results of any conference including all stipulations shall, if not transcribed, be summarized in writing by the Presiding Officer and made part of the record.

(l) *Primary discovery (exchange of witness lists and documents).* (1) At a prehearing conference or within some reasonable time set by the Presiding Officer prior to the hearing, each party shall make available to the other parties the names of the expert and other witnesses the party expects to call, together with a brief summary of their expected testimony and a list of all documents and exhibits which the party expects to introduce into evidence. Thereafter, witnesses, documents, or exhibits may be added and summaries of expected testimony amended upon motion by a party.

(2)(i) The Presiding Officer, may, upon motion by a party or other person, and for good cause shown, by order:

(A) Restrict or defer disclosure by a party of the name of a witness or a narrative summary of the expected testimony of a witness; and

(B) Prescribe other appropriate measures to protect a witness.

(ii) Any party affected by any such action shall have an adequate opportunity, once he learns the name of a witness and obtains the narrative summary of his expected testimony, to prepare for the presentation of his case.

(m) *Other discovery.* (1) Except as so provided by paragraph (l) of this section, further discovery, under this paragraph (m), shall be permitted only upon determination by the Presiding Officer:

(i) That such discovery will not in any way unreasonably delay the proceeding;

(ii) That the information to be obtained is not obtainable voluntarily; and

(iii) That such information has significant probative value. The Presiding Officer shall be guided by the procedures set forth in the Federal Rules of Civil Procedure (28 U.S.C.), where practicable, and the precedents thereunder, except that no discovery shall be undertaken except upon order of the Presiding Officer or upon agreement of the parties.

(2) The Presiding Officer shall order depositions upon oral questions only

upon a showing of good cause and upon a finding that:

(i) The information sought cannot be obtained by alternative methods; or

(ii) There is a substantial reason to believe that relevant and probative evidence may otherwise not be preserved for presentation by a witness at the hearing.

(3) Any party to the proceeding desiring an order of discovery shall make a motion or motions therefor. Such a motion shall set forth:

(i) The circumstances warranting the taking of the discovery;

(ii) The nature of the information expected to be discovered; and

(iii) The time and place where it will be taken. If the Presiding Officer determines the motion should be granted, he shall issue an order for the taking of such discovery together with the conditions and terms thereof.

(4) Failure to comply with an order issued pursuant to this paragraph (m) may lead to the inference that the information to be discovered would be adverse to the person or party from whom the information was sought.

(n) *Protective orders: in camera proceedings.* (1) Upon motion by a party or by the person from whom discovery is sought, and upon a showing by the movant that the disclosure of the information to be discovered, or a particular part thereof, (other than emission data) would result in methods or processes entitled to protection as trade secrets of such person being divulged, the Presiding Officer may enter a protective order with respect to such material. Any protective order shall contain such terms governing the treatment of the information as may be appropriate under the circumstances to prevent disclosure outside the hearing: *Provided,* That the order shall state that the material shall be filed separately from other evidence and exhibits in the hearing. Disclosure shall be limited to parties to the hearing, their counsel and relevant technical consultants, and authorized representatives of the United States concerned with carrying out the Act. Except in the case of the government, disclosure may be limited to counsel to parties who shall not disclose such information to the parties themselves. Except in the case of the government, disclosure to a party or his counsel shall be conditioned on execution of a sworn statement that no disclosure of the information will be made to persons not entitled to receive it under the terms of the protective order. (No such provision is necessary where government employees are concerned because disclosure by them is subject to the terms of 18 U.S.C. 1905.)

(2)(i) A party or person seeking a protective order may be permitted to make all or part of the required showing in camera. A record shall be made of such in camera proceedings. If the Presiding Officer enters a protective order following a showing in camera, the record of such showing shall be sealed and preserved and made available to the Agency or court in the event of appeal.

(ii) Attendance at any in camera proceeding may be limited to the Presiding Officer, the Agency, and the person or party seeking the protective order.

(3) Any party, subject to the terms and conditions of any protective order issued pursuant to paragraph (n)(1) of this section, desiring for the presentation of his/her case to make use of any in camera documents or testimony shall make application to the Presiding Officer by motion setting forth the justification therefor. The Presiding Officer, in granting any such motion, shall enter an order protecting the rights of the affected persons and parties and preventing unnecessary disclosure of such information, including the presentation of such information and oral testimony and cross-examination concerning it in executive session, as in his/her discretion is necessary and practicable.

(4) In the submittal of findings, briefs, or other papers, counsel for all parties shall make a good faith attempt to refrain from disclosing the specific details of in camera documents and testimony. This shall not preclude references in such findings, briefs, or other papers to such documents or testimony including generalized statements based on their contents. To the extent that counsel consider it necessary to include specific details in their presentations, such data shall be

incorporated in separate findings, briefs, or other papers marked ''confidential'', which shall become part of the in camera record.

(o) *Motions*. (1) All motions, except those made orally during the course of the hearing, shall be in writing and shall state with particularity the grounds therefor, shall set forth the relief or order sought, and shall be filed with the Hearing Clerk and served upon all parties.

(2) Within ten days after service of any motion filed pursuant to this section, or within such other time as may be fixed by the Environmental Appeals Board or the Presiding Officer, as appropriate, any party may serve and file an answer to the motion. The movant shall, if requested by the Environmental Appeals Board or the Presiding Officer, as appropriate, serve and file reply papers within the time set by the request.

(3) The Presiding Officer shall rule upon all motions filed or made prior to the filing of his decision or accelerated decision, as appropriate. The Environmental Appeals Board shall rule upon all motions filed prior to the appointment of a Presiding Officer and all motions filed after the filing of the decision of the Presiding Officer or accelerated decision. Oral argument of motions will be permitted only if the Presiding Officer or the Environmental Appeals Board, as appropriate, deems it necessary.

(p) *Evidence*. (1) The official transcripts and exhibits, together with all papers and requests filed in the proceeding, shall constitute the record. Immaterial or irrelevant parts of an admissible document shall be segregated and excluded so far as practicable. Documents or parts thereof subject to a protective order under paragraph (n) of this section shall be segregated. Evidence may be received at the hearing even though inadmissible under the rules of evidence applicable to judicial proceedings. The weight to be given evidence shall be determined by its reliability and probative value.

(2) The Presiding Officer shall allow the parties to examine and to cross-examine a witness to the extent that such examination and cross-examination is necessary for a full and true disclosure of the facts.

(3) Rulings of the Presiding Officer on the admissibility of evidence, the propriety of examination and cross-examination and other procedural matters shall appear in the record.

(4) Parties shall automatically be presumed to have taken exception to an adverse ruling.

(q) *Interlocutory appeal*. (1) An interlocutory appeal may be taken to the Environmental Appeals Board either:

(i) With the consent of the Presiding Officer and where he certifies on the record or in writing that the allowance of an interlocutory appeal is clearly necessary to prevent exceptional delay, expense or prejudice to any party or substantial detriment to the public interest; or

(ii) Absent the consent of the Presiding Officer, by permission of the Environmental Appeals Board.

(2) Applications for interlocutory appeal of any ruling or order of the Presiding Officer may be filed with the Presiding Officer within 5 days of the issuance of the ruling or order being appealed. Answers thereto by other parties may be filed within 5 days of the service of such applications.

(3) The Presiding Officer shall rule on such applications within 5 days of the filing of such application or answers thereto.

(4) Applications to file such appeals absent consent of the Presiding Officer shall be filed with the Environmental Appeals Board within 5 days of the denial of any appeal by the Presiding Officer.

(5) The Environmental Appeals Board will consider the merits of the appeal on the application and any answers thereto. No oral argument will be heard nor other briefs filed unless the Environmental Appeals Board directs otherwise.

(6) Except under extraordinary circumstances as determined by the Presiding Officer, the taking of an interlocutory appeal will not stay the hearing.

(r) *Record*. (1) Hearings shall be stenographically reported and transcribed, and the original transcript shall be part of the record and the sole official transcript. Copies of the record shall be

filed with the Hearing Clerk and made available during Agency business hours for public inspection. Any person desiring a copy of the record of the hearing or any part thereof shall be entitled to the same upon payment of the cost thereof.

(2) The official transcripts and exhibits, together with all papers and requests filed in the proceeding, shall constitute the record.

(s) *Findings, conclusions.* (1) Within 20 days of the close of the reception of evidence, or within such longer time as may be fixed by the Presiding Officer, any party may submit for the consideration of the Presiding Officer findings of fact, conclusions of law, and a rule or order, together with reasons therefor and briefs in support thereof. Such proposals shall be in writing, shall be served upon all parties, and shall contain adequate references to the record and authorities relied on.

(2) The record shall show the Presiding Officer's ruling on the findings and conclusions except when his/her order disposing of the proceeding otherwise informs the parties of the action taken by him/her thereon.

(t) *Decision of the Presiding Officer.* (1) Unless extended by the Environmental Appeals Board, the Presiding Officer shall issue and file with the Hearing Clerk his decision within 30 days after the period for filing findings as provided for in paragraph (s) of this section has expired.

(2) The Presiding Officer's decision shall become the opinion of the Environmental Appeals Board:

(i) When no notice of intention to appeal as described in paragraph (u) of this section is filed, 30 days after the issuance thereof, unless in the interim the Environmental Appeals Board shall have taken action to review or stay the effective date of the decision; or

(ii) When a notice of intention to appeal is filed but the appeal is not perfected as required by paragraph (u) of this section, 5 days after the period allowed for perfection of an appeal has expired unless within that 5 day period, the Environmental Appeals Board shall have taken action to review or stay the effective date of the decision.

(3) The Presiding Officer's decision shall include a statement of findings and conclusions, as well as the reasons or basis therefor, upon all the material issues of fact or law presented on the record and an appropriate rule or order. Such decision shall be supported by substantial evidence and based upon a consideration of the whole record.

(4) At any time prior to the issuance of his decision, the Presiding Officer may reopen the proceeding for the reception of further evidence. Except for the correction of clerical errors, the jurisdiction of the Presiding Officer is terminated upon the issuance of his/her decision.

(u) *Appeal from the decision of the Presiding Officer.* (1) Any party to a proceeding may appeal the Presiding Officer's decision to the Environmental Appeals Board, Provided, That within 10 days after issuance of the Presiding Officer's decision such party files a notice of intention to appeal and an appeal brief within 30 days of such decision.

(2) When an appeal is taken from the decision of the Presiding Officer, any party may file a brief with respect to such appeal. The brief shall be filed within 20 days of the date of the filing of the appellant's brief.

(3) Any brief filed pursuant to this paragraph (u) shall contain in the order indicated, the following:

(i) A subject index of the matter in the brief, with page references, and a table of cases (alphabetically arranged), textbooks, statutes, and other material cited, with page references thereto;

(ii) A specification of the issues intended to be urged;

(iii) The argument presenting clearly the points of fact and law relied upon in support of the position taken on each issue, with specific page references to the record and the legal or other material relied upon; and

(iv) A form of rule or order for the Environmental Appeals Board's consideration if different from the rule or order contained in the Presiding Officer's decision.

(4) No brief in excess of 40 pages shall be filed without leave of the Environmental Appeals Board.

(5) Oral argument will be allowed in the discretion of the Environmental Appeals Board.

(v) *Review of the Presiding Officer's decision in absence of appeal.* (1) If, after the expiration of the period for taking an appeal as provided for by paragraph (u) of this section, no notice of intention to appeal the decision of the Presiding Officer has been filed, or if filed, not perfected, the Hearing Clerk shall so notify the Environmental Appeals Board.

(2) The Environmental Appeals Board, upon receipt of notice from the Hearing Clerk that no notice of intention to appeal has been filed, or if filed, not perfected pursuant to paragraph (u) of this section, may, on its own motion, within the time limits specified in paragraph (t)(2) of this section, review the decision of the Presiding Officer. Notice of the intention of the Environmental Appeals Board to review the decision of the Presiding Officer shall be given to all parties and shall set forth the scope of such review and the issue which shall be considered and shall make provision for filing of briefs.

(w) *Decision on appeal or review.* (1) Upon appeal from or review of the Presiding Officer's decision, the Environmental Appeals Board shall consider such parts of the record as are cited or as may be necessary to resolve the issues presented and, in addition shall to the extent necessary or desirable exercise all the powers which it could have exercised if it had presided at the hearing.

(2) In rendering its decision, the Environmental Appeals Board shall adopt, modify, or set aside the findings, conclusions, and rule or order contained in the decision of the Presiding Officer and shall set forth in its decision a statement of the reasons or bases for its action.

(3) In those cases where the Environmental Appeals Board determines that it should have further information or additional views of the parties as to the form and content of the rule or order to be issued, the Environmental Appeals Board, in its discretion, may withhold final action pending the receipt of such additional information or views, or may remand the case to the Presiding Officer.

(x) *Reconsideration.* Within twenty (20) days after issuance of the Environmental Appeals Board's decision, any party may file with the Environmental Appeals Board a petition for reconsideration of such decision, setting forth the relief desired and the grounds in support thereof. Any petition filed under this paragraph (x) must be confined to new questions raised by the decision or the final order and upon which the petitioner had no opportunity to argue before the Presiding Officer or the Environmental Appeals Board. Any party desiring to oppose such a petition shall file and answer thereto within ten (10) days after the filing of the petition. The filing of a petition for reconsideration shall not operate to stay the effective date of the decision or order or to toll the running of any statutory time period affecting such decision or order unless specifically so ordered by the Environmental Appeals Board.

(y) *Accelerated decision: Dismissal.* (1) The Presiding Officer, upon motion of any party or sua sponte, may at any time render an accelerated decision in favor of the Agency or the manufacturer or remanufacturer as to all or any part of the proceeding, without further hearing or upon such limited additional evidence such as affidavits as he/she may require, or dismiss any party with prejudice, under any of the following conditions:

(i) Failure to state a claim upon which relief can be granted, or direct or collateral estoppel;

(ii) There is no genuine issue of material fact and a party is entitled to judgment as a matter of law; or

(iii) Such other and further reasons as are just, including specifically failure to obey a procedural order of the Presiding Officer.

(2) If under this paragraph (y) an accelerated decision is issued as to all the issues and claims joined in the proceeding, the decision shall be treated for the purposes of these procedures as the decision of the Presiding Officer as provided in paragraph (p) of this section.

(3) If under this paragraph (y), judgment is rendered on less than all issues or claims in the proceeding, the Presiding Officer shall determine what material facts exist without substantial controversy and what material

facts are actually and in good faith controverted. He/she shall thereupon issue an order specifying the facts which appear without substantial controversy, and the issues and claims upon which the hearing will proceed.

(z) *Conclusion of hearing.* (1) If, after the expiration of the period for taking an appeal as provided for by paragraph (u) of this section, no appeal has been taken from the Presiding Officer's decision, and, after the expiration of the period for review by the Environmental Appeals Board on its own motion as provided for by paragraph (v) of this section, the Environmental Appeals Board does not move to review such decision, the hearing will be deemed to have ended at the expiration of all periods allowed for such appeal and review.

(2) If an appeal of the Presiding Officer's decision is taken pursuant to paragraph (u) of this section, or if, in the absence of such appeal, the Environmental Appeals Board moves to review the decision of the Presiding Officer pursuant to paragraph (v) of this section, the hearing will be deemed to have ended upon the rendering of a final decision by the Environmental Appeals Board.

(aa) *Judicial review.* (1) The Administrator hereby designates the Deputy General Counsel, Environmental Protection Agency as the officer upon whom copy of any petition for judicial review shall be served. Such officer shall be responsible for filing in the court the record on which the order of the Environmental Appeals Board is based.

(2) Before forwarding the record to the court, the Agency shall advise the petitioner of costs of preparing it and as soon as payment to cover fees is made shall forward the record to the court.

Subpart I—Importation of Nonconforming Locomotives and Locomotive Engines

§ 92.801 Applicability.

(a) Except where otherwise indicated, this subpart is applicable to importers of locomotives or locomotive engines for which the Administrator has promulgated regulations under this part prescribing emission standards, that are offered for importation or imported into the United States, but which locomotives or locomotive engines, at the time of importation or being offered for importation, are not covered by certificates of conformity issued under section 213 and section 206(a) of the Clean Air Act (that is, which are nonconforming locomotives or locomotive engines as defined in § 92.2), and this part. Compliance with regulations under this subpart does not relieve any person or entity from compliance with other applicable provisions of the Clean Air Act.

(b) Regulations prescribing further procedures for the importation of locomotives and locomotive engines into the Customs territory of the United States, as defined in 19 U.S.C. 1202, are set forth in U.S. Customs Service regulations (19 CFR chapter I).

§ 92.802 Definitions.

The definitions of subpart A of this part apply to this subpart.

§ 92.803 Admission.

A nonconforming locomotive or locomotive engine offered for importation may be admitted into the United States pursuant to the provisions of this subpart. In order to obtain admission the importer must submit to the Administrator a written request for approval containing the following:

(a) Identification of the importer of the locomotive or locomotive engine and the importer's address, telephone number, and taxpayer identification number;

(b) Identification of the locomotive's or locomotive engine's owner, the owner's address, telephone number, and taxpayer identification number;

(c) Identification of the locomotive and/or locomotive engine including make, model, identification number, and original production year;

(d) Information indicating the provision in this subpart under which the locomotive or locomotive engine is to be imported;

(e) Identification of the place(s) where the locomotive or locomotive engine is to be stored until EPA approval of the importer's application to the Administrator for final admission;

(f) Authorization for EPA enforcement officers to conduct inspections or testing otherwise permitted by the Act or regulations thereunder; and

(g) Such other information as is deemed necessary by the Administrator.

§ 92.804 Exemptions.

(a) Unless otherwise specified, any person may apply for the exemptions allowed by this section.

(b) Notwithstanding other requirements of this subpart, a nonconforming locomotive or locomotive engine that qualifies for a temporary exemption under this paragraph may be conditionally admitted into the United States if prior written approval for the conditional admission is obtained from the Administrator. Conditional admission is to be under bond. The Administrator may request that the U.S. Customs Service require a specific bond amount to ensure compliance with the requirements of the Act and this subpart. A written request for a temporary exemption from the Administrator shall contain the identification required in § 92.803 and information that demonstrates that the locomotives and or locomotive engines qualify for an exemption. Noncompliance with provisions of this section may result in the forfeiture of the total amount of the bond and/or exportation of the locomotive or locomotive engine. The following temporary exemptions are permitted by this paragraph (b):

(1) *Exemption for repairs or alterations.* Upon written approval by EPA, a person may conditionally import under bond a nonconforming locomotive or locomotive engine solely for purpose of repair(s) or alteration(s). The locomotive or locomotive engine may not be operated in the United States other than for the sole purpose of repair or alteration or shipment to the point of repair or alteration and to the port of export. It may not be sold or leased in the United States and is to be exported upon completion of the repair(s) or alteration(s).

(2) *Testing exemption.* A nonconforming test locomotive or locomotive engine may be conditionally imported by a person subject to the requirements of § 92.905. A test locomotive or locomotive engine may be operated in the United States provided that the operation is an integral part of the test. This exemption is limited to a period not exceeding one year from the date of importation unless a request is made by the appropriate importer, and subsequently granted by EPA, concerning the locomotive or locomotive engine in accordance with § 92.905 for a subsequent one-year period.

(3) *Display exemptions.* (i) A nonconforming locomotive or locomotive engine intended solely for display may be conditionally imported under bond subject to the requirements of § 92.906(b).

(ii) A display locomotive or locomotive engine may be imported by any person for purposes related to a business or the public interest. Such purposes do not include collections normally inaccessible or unavailable to the public on a daily basis, display of a locomotive or locomotive engine at a dealership, private use, or other purpose that the Administrator determines is not appropriate for display exemptions. A display locomotive or locomotive engine may not be sold or leased in the United States and may not be operated in the United States except for the operation incident and necessary to the display purpose.

(iii) A display exemption is granted for 12 months or for the duration of the display purpose, whichever is shorter. Extensions of up to 12 months each are available upon approval by the Administrator. In no circumstances, however, may the total period of exemption exceed 36 months.

(c) National security exemption. Notwithstanding any other requirement of this subpart, a locomotive or locomotive engine may be permanently imported into the United States under the national security exemption found at § 92.908, if prior written approval for such permanent importation is obtained from the Administrator. A request for approval is to contain the identification information required in § 92.803 and information that demonstrates that the importer is entitled to the exemption.

(d) An application for exemption provided for in paragraphs (b) and (c) of this section shall be mailed to: Group Manager, Engine Compliance Programs

Group, Engine Programs and Compliance Division U.S. Environmental Protection Agency, 6403–J, 1200 Pennsylvania Ave., NW., Washington, DC 20460, Attention: Imports.

(e) Incidental use exemption. Locomotives that are operated primarily outside of the United States, and that enter the United States temporarily from Canada or Mexico are exempt from the requirements and prohibitions of this part without application, provided that the operation within the United States is not extensive and is incidental to their primary operation.

§ 92.805 Prohibited acts; penalties.

(a) The importation of a locomotive or locomotive engine which is not covered by a certificate of conformity other than in accordance with this subpart and the entry regulations of the U.S. Customs Service is prohibited. Failure to comply with this section is a violation of section 213(d) and section 203 of the Act.

(b) Unless otherwise permitted by this subpart, during a period of conditional admission, the importer of a locomotive or locomotive engine may not:

(1) Operate the locomotive or locomotive engine in the United States;

(2) Sell or lease or offer the locomotive or locomotive engine for sale or lease.

(c) A locomotive or locomotive engine conditionally admitted pursuant to § 92.804 and not otherwise permanently exempted or excluded by the end of the period of conditional admission, or within such additional time as the Administrator and the U.S. Customs Service may allow, is deemed to be unlawfully imported into the United States in violation of section 213(d) and section 203 of the Act, unless the locomotive or locomotive engine has been delivered to the U.S. Customs Service for export or other disposition under applicable Customs laws and regulations by the end of the period of conditional admission. A locomotive or locomotive engine not so delivered is subject to seizure by the U.S. Customs Service.

(d) An importer who violates section 213(d) and section 203 of the Act is subject to a civil penalty under section 205 of the Act and § 92.1106. In addition to the penalty provided in the Act and § 92.1106, where applicable, a person or entity who imports an engine under the exemption provisions of § 92.804 and, who fails to deliver the locomotive or locomotive engine to the U.S. Customs Service by the end of the period of conditional admission is liable for liquidated damages in the amount of the bond required by applicable Customs laws and regulations.

Subpart J—Exclusion and Exemption Provisions

§ 92.901 Purpose and applicability.

The provisions of this subpart identify excluded locomotives (i.e., locomotives not covered by the Act) and allow for the exemption of locomotives and locomotive engines from certain provisions of this part. The applicability of the exclusions is described in § 92.903, and the applicability of the exemption allowances is described in §§ 92.904 through 92.909.

§ 92.902 Definitions.

The definitions of subpart A of this part apply to this subpart.

§ 92.903 Exclusions.

(a) Upon written request with supporting documentation, EPA will make written determinations as to whether certain locomotives are excluded from applicability of this part. Any locomotives that are determined to be excluded are not subject to the regulations under this part. Requests to determine whether certain locomotives are excluded should be sent to: Group Manager, Engine Compliance Programs Group, Engine Programs and Compliance Division U.S. Environmental Protection Agency, 6403–J, 1200 Pennsylvania Ave., NW., Washington, DC 20460.

(b) EPA will maintain a list of models of locomotives that have been determined to be excluded from coverage under this part. This list will be available to the public and may be obtained by writing to the address in paragraph (a) of this section.

(c) In addition to the locomotives excluded in paragraph (a) of this section, certain vehicles are not subject to the requirements and prohibitions of this

part because they are excluded from the definitions of ''locomotive'' and/or ''new locomotive'' in § 92.2.

§ 92.904 Exemptions.

(a) Except as specified otherwise in this subpart, the provisions of §§ 92.904 through 92.911 exempt certain new locomotives and new locomotive engines from the standards, other requirements, and prohibitions of this part, except for the requirements of this subpart and the requirements of § 92.1104.

(b)(1) Any person may request a testing exemption subject to the provisions of § 92.905.

(2) Any locomotive or locomotive engine manufacturer or remanufacturer may request a national security exemption subject to the provisions of § 92.908.

(3) Locomotive or locomotive engines manufactured or remanufactured for export purposes are exempt without application, subject to the provisions of § 92.909, except as otherwise specified by § 92.909.

(4) Manufacturer-owned and remanufacturer-owned locomotive or locomotive engines are exempt without application, subject to the provisions of § 92.906(a).

(5) Display locomotive or locomotive engines are exempt without application, subject to the provisions of § 92.906(b).

(6) Locomotive propulsion engines that are identical to engines that are covered by a certificate of conformity issued under 40 CFR part 89, and the locomotives in which they are used, are exempt, subject to the provisions of § 92.907.

§ 92.905 Testing exemption.

(a)(1) The Administrator may exempt from the standards and/or other requirements and prohibitions of this part new locomotives or new locomotive engines that are being used solely for the purpose of conducting a test program. Any person requesting an exemption for the purpose of conducting a test program must demonstrate the following:

(i) That the test program has a purpose which constitutes an appropriate basis for an exemption in accordance this section;

(ii) That the proposed test program necessitates the granting of an exemption;

(iii) That the proposed test program exhibits reasonableness in scope; and

(iv) That the proposed test program exhibits a degree of oversight and control consonant with the purpose of the test program and EPA's monitoring requirements.

(2) Paragraphs (b), (c), (d), and (e) of this section describe what constitutes a sufficient demonstration for each of the four elements identified in paragraphs (a)(1)(i) through (iv) of this section.

(b) With respect to the purpose of the proposed test program, an appropriate purpose would be research, investigations, studies, demonstrations, technology development, or training, but not national security. A concise statement of purpose is a required item of information.

(c) With respect to the necessity that an exemption be granted, necessity arises from an inability to achieve the stated purpose in a practicable manner without performing or causing to be performed one or more of the prohibited acts under § 92.1103. In appropriate circumstances, time constraints may be a sufficient basis for necessity, but the cost of certification alone, in the absence of extraordinary circumstances, is not a basis for necessity.

(d) With respect to reasonableness, a test program must exhibit a duration of reasonable length and affect a reasonable number of engines. In this regard, required items of information include:

(1) An estimate of the program's duration; and

(2) The maximum number of locomotives or locomotive engines involved.

(e) With respect to control, the test program must incorporate procedures consistent with the purpose of the test and be capable of affording EPA monitoring capability. As a minimum, required items of information include:

(1) The technical nature of the testing;

(2) The location(s) of the testing;

(3) The time, work, or mileage duration of the testing;

(4) The ownership arrangement with regard to the locomotives and engines involved in the testing;

(5) The intended final disposition of the locomotives and engines;

(6) The manner in which the locomotive or engine identification numbers will be identified, recorded, and made available; and

(7) The means or procedure whereby test results will be recorded.

(f) A manufacturer or remanufacturer of new locomotives or locomotive engines may request a testing exemption to cover locomotives or locomotive engines intended for use in test programs planned or anticipated over the course of a subsequent two-year period. Unless otherwise required by the Director, Engine Programs and Compliance Division, a manufacturer or remanufacturer requesting such an exemption need only furnish the information required by paragraphs (a)(1) and (d)(2) of this section along with a description of the recordkeeping and control procedures that will be employed to assure that the locomotives or locomotive engines are used for purposes consistent with paragraph (a) of this section.

(g) For locomotives being used for the purpose of developing a fundamentally new emission control technology related either to an alternative fuel or an aftertreatment device, the Administrator may exempt the locomotive from some or all of the applicable standards of this part for the full useful life of the locomotive, subject to the provisions of paragraphs (a) through (f) of this section.

§ 92.906 Manufacturer-owned, remanufacturer-owned exemption and display exemption.

(a) Any manufacturer-owned or remanufacturer-owned locomotive or locomotive engine is exempt from § 92.1103, without application, if the manufacturer complies with the following terms and conditions:

(1) The manufacturer or remanufacturer must establish, maintain, and retain the following adequately organized and indexed information on each exempted locomotive or locomotive engine:

(i) Locomotive or engine identification number;

(ii) Use of the locomotive or engine on exempt status; and

(iii) Final disposition of any locomotive or engine removed from exempt status.

(2) The manufacturer or remanufacturer must provide right of entry and access to these records to EPA Enforcement Officers as outlined in § 92.208.

(3) The manufacturer or remanufacturer must permanently affix a label to each locomotive or locomotive engine on exempt status, unless the requirement is waived or an alternate procedure is approved by the Director, Engine Programs and Compliance Division. This label should:

(i) Be affixed in a readily visible portion of the locomotive or locomotive engine;

(ii) Be attached in such a manner that cannot be removed without destruction or defacement;

(iii) State in the English language and in block letters and numerals of a color that contrasts with the background of the label, the following information:

(A) The label heading ''Emission Control Information'';

(B) Full corporate name and trademark of manufacturer or remanufacturer;

(C) Engine displacement, engine family identification, and model year of engine; or person of office to be contacted for further information about the engine;

(D) The statement ''This locomotive or locomotive engine is exempt from the prohibitions of 40 CFR 92.1103.''

(4) No provision of paragraph (a)(3) of this section prevents a manufacturer or remanufacturer from including any other information it desires on the label.

(5) The locomotive or locomotive engine is not used in revenue-generating service, or sold.

(b) Display exemption. An uncertified locomotive or locomotive engine that is to be used solely for display purposes, and that will only be operated incident and necessary to the display purpose, and will not be sold unless an applicable certificate of conformity has

been obtained for the locomotive or engine, is exempt without request from the standards of this part.

[63 FR 18998, Apr. 16, 1998, as amended at 70 FR 40457, July 13, 2005]

§ 92.907 Non-locomotive-specific engine exemption.

(a) For manufacturers selling non-locomotive-specific engines to be used as propulsion engines in remanufactured locomotives, such locomotives and engines are exempt, provided:

(1) The engines are covered by a certificate of conformity issued under 40 CFR part 89;

(2) More engines are reasonably projected to be sold and used under the certificate for non-locomotive use than for use in locomotives;

(3) The number of such engines exempted under this paragraph (a) does not exceed:

(i) 50 per manufacturer in any calendar year, where EPA determines that the use of the non-locomotive-specific engines will result in a significantly greater degree of emission control over the lifetime of the locomotive than using remanufactured engines certified under this part 92; or

(ii) 25 per manufacturer in any calendar year, where EPA has not determined that the use of the non-locomotive-specific engines will result in a significantly greater degree of emission control over the lifetime of the locomotive than using remanufactured engines certified under this part 92;

(4) The Administrator has approved the exemption as specified in paragraph (e) of this section.

(b) For manufacturers of freshly manufactured switch locomotives powered by non-locomotive-specific engines, such freshly manufactured switch locomotives are exempt, provided:

(1) The engines are covered by a certificate of conformity issued under 40 CFR part 89;

(2) More engines are reasonably projected to be sold and used under the certificate for non-locomotive use than for use in locomotives;

(3) The number of such locomotives sold or leased by the locomotive manufacturer within any three-year period, and exempted under this paragraph (b) does not exceed 30; and

(4) The Administrator has approved the exemption as specified in paragraph (e) of this section.

(c)(1) The remanufacture of locomotive engines that have been exempted under this section is exempt without request provided that the remanufacturer remanufactures them to a previously-certified configuration, or to be equivalent to engines that have been previously certified under this part or 40 CFR part 89.

(2) The remanufacture of non-locomotive-specific engines that were used in locomotives prior to January 1, 2000 is exempt from the requirements of this part provided: The remanufacturer remanufactures them to be equivalent to engines that have been previously certified under this part or 40 CFR part 89, or demonstrates that the NO_X emissions from the remanufactured locomotive engine are at least 40 percent less than its emissions prior to certification; and the Administrator has approved the exemption as specified in paragraph (e) of this section.

(d) Manufacturers and remanufacturers of engines and/or locomotives exempted under this section shall:

(1) Report annually to EPA the number of engines exempted under paragraph (a) of this section;

(2) Report annually to EPA the number of locomotives exempted under paragraph (b) of this section; and

(3) Upon the Administrator's request, provide test data showing the emissions of the engine or locomotive when it is operated at the actual in-use locomotive power points.

(e)(1) Manufacturers and remanufacturers seeking an exemption under this section shall notify the Administrator of such intent at least 90 days prior to selling or placing into service the locomotives or locomotive engines.

(2) The Administrator shall deny a non-locomotive-specific exemption in any case where he/she has evidence that approving such an exemption would be inappropriate because of adverse environmental or economic impacts.

(3) When denying an exemption, the Administrator shall notify the manufacturer or remanufacturer of EPA's

decision to deny or consider denying the exemption within 60 days of the manufacturer's or remanufacturer's notification in paragraph (e)(1) of this section.

(4) Unless the Administrator notifies the manufacturer or remanufacturer of EPA's decision to deny or consider denying the exemption within 60 days of the manufacturer's or remanufacturer's notification in paragraph (e)(1) of this section, the exemption shall be considered approved 90 days of the manufacturer's or remanufacturer's notification.

[63 FR 18998, Apr. 16, 1998, as amended at 70 FR 40457, July 13, 2005]

§ 92.908 National security exemption.

A manufacturer or remanufacturer requesting a national security exemption must state the purpose for which the exemption is required and the request must be endorsed by an agency of the federal government charged with responsibility for national defense.

§ 92.909 Export exemptions.

(a) A new locomotive or locomotive engine intended solely for export, and so labeled or tagged on the outside of any container, the locomotive and on the engine itself, is subject to the provisions of § 92.1103, unless the importing country has new locomotive or new locomotive engine emission standards which differ from EPA standards.

(b) For the purpose of paragraph (a) of this section, a country having no standards whatsoever is deemed to be a country having emission standards which differ from EPA standards.

(c) It is a condition of any exemption for the purpose of export under paragraph (a) of this section, that such exemption is void *ab initio* with respect to a new locomotive or locomotive engine intended solely for export, where such locomotive or locomotive engine is sold, or offered for sale, to an ultimate purchaser or otherwise distributed or introduced into commerce in the United States for purposes other than export.

§ 92.910 Granting of exemptions.

(a) If upon completion of the review of an exemption request made pursuant to § 92.905 or § 92.908, EPA determines it is appropriate to grant such an exemption, a memorandum of exemption is to be prepared and submitted to the person requesting the exemption. The memorandum is to set forth the basis for the exemption, its scope, and such terms and conditions as are deemed necessary. Such terms and conditions generally include, but are not limited to, agreements by the applicant to conduct the exempt activity in the manner described to EPA, create and maintain adequate records accessible to EPA at reasonable times, employ labels for the exempt locomotives or engines setting forth the nature of the exemption, take appropriate measures to assure that the terms of the exemption are met, and advise EPA of the termination of the activity and the ultimate disposition of the locomotives or engines.

(b) Any exemption granted pursuant to paragraph (a) of this section is deemed to cover any subject locomotive or engine only to the extent that the specified terms and conditions are complied with. A breach of any term or condition causes the exemption to be void ab initio with respect to any locomotive or engine. Consequently, the causing or the performing of an act prohibited under § 92.1103(a)(1) or (a)(3), other than in strict conformity with all terms and conditions of this exemption, renders the person to whom the exemption is granted, and any other person to whom the provisions of § 92.1103(a) are applicable, liable to suit under sections 204 and 205 of the Act.

EFFECTIVE DATE NOTE: At 63 FR 19077, Apr. 16, 1998, § 92.910 was added. This section contains information collection and recordkeeping requirements and will not become effective until approval has been given by the Office of Management and Budget.

§ 92.911 Submission of exemption requests.

Requests for exemption or further information concerning exemptions and/or the exemption request review procedure should be addressed to: Group Manager, Engine Compliance Programs Group, Engine Programs and Compliance Division U.S. Environmental Protection Agency, 6403-J, 1200 Pennsylvania Ave., NW., Washington, DC 20460.

§ 92.912 Staged-assembly exemption.

You may ask us to provide a temporary exemption to allow you to complete production of your engines at different facilities, as long as you maintain control of the engines until they are in their certified configuration. We may require you to take specific steps to ensure that such engines are in their certified configuration before reaching the ultimate purchaser. You may request an exemption under this section in your application for certification, or in a separate submission.

[70 FR 40457, July 13, 2005]

Subpart K—Requirements Applicable to Owners and Operators of Locomotives and Locomotive Engines

§ 92.1001 Applicability.

The requirements of this subpart are applicable to railroads and all other owners and operators of locomotives and locomotive engines subject to the provisions of subpart A of this part, except as otherwise specified.

§ 92.1002 Definitions.

The definitions of subpart A of this part apply to this subpart.

§ 92.1003 In-use testing program.

(a) *Applicability*. This section applies to all Class I freight railroads, beginning on January 1, 2005.

(b) *Testing requirements*. Each railroad subject to the provisions of this section shall annually test a sample of locomotives in its fleet. For the purpose of this section, a railroad's fleet includes both the locomotives that it owns and the locomotives that it is leasing.

(1)(i) Except as specified in paragraphs (b)(1) (ii) and (iii) of this section, the number of locomotives to be tested shall be at least 0.15 percent of the average number of locomotives in the railroad's fleet during the previous calendar year (i.e., the number tested shall be 0.0015 multiplied by the number of locomotives in the fleet, rounded up to the next whole number).

(ii) After December 31, 2015, the number of locomotives to be tested by railroads with 500 or more locomotives shall be at least 0.10 percent of the average number of locomotives in the railroad's fleet during the previous calendar year (i.e., the number tested shall be 0.0010 multiplied by the number of locomotives in the fleet, rounded up to the next whole number). After December 31, 2015, the number of locomotives to be tested by railroads with fewer than 500 locomotives shall be zero. The provisions of this paragraph (b)(1)(ii) apply only when:

(A) No new locomotive emission standards have taken effect during the previous 5 years;

(B) Locomotive emission controls have not changed fundamentally, during the previous 5 years, in any manner that could reasonably be expected to have the potential to significantly affect emissions durability; and

(C) Testing during the previous 5 years has shown, to the satisfaction of the Administrator, that the degree of noncompliance for tested locomotives is low enough that the higher rate of testing specified in paragraph (b)(1)(i) of this section is not needed.

(iii) The Administrator may allow a railroad to perform a smaller number of tests than specified in paragraphs (b)(1) (i) or (ii) of this section, where he/she determines that the number of tests specified in paragraphs (b)(1)(i) or (ii) of this section is not necessary.

(2) Testing shall be performed according to the test procedures in subpart B of this part, unless otherwise approved by the Administrator.

(c) *Test locomotive selection*. (1)(i) A representative sample of locomotives shall be randomly selected for testing.

(ii) Unless otherwise specified by the Administrator, the selection shall be made by the railroad.

(iii) The railroad shall select locomotives from each manufacturer and remanufacturer, and from each tier level (e.g., Tier 0, Tier 1 and Tier 2) in proportion to their numbers in the railroad's fleet, except where specified or allowed otherwise by the Administrator.

(iv) Locomotives tested during the previous year shall be excluded from the sample.

(v) Locomotives may not be excluded from the sample because of visible

smoke, a history of durability problems, or other evidence of malmaintenance.

(2)(i) Locomotives selected for testing according to the provisions of this section shall have been certified in compliance with requirements in subpart A of this part, and shall have been operated for at least 100 percent of their useful lives.

(ii) Where the number of locomotives that have been operated for at least 100 percent of their useful lives is not large enough to fulfill the testing requirement, locomotives still within their useful lives shall be tested. In this case, the locomotives must have been operated longer than at least 80 percent of the locomotives in the railroad's fleet.

(3) Where specified by the Administrator, the railroad shall test specified locomotives in its fleet, including locomotives that do not meet the criteria specified in paragraph (c)(2) of this section.

(d) *Reporting requirements*. All testing done in compliance with the provisions of this section shall be reported to EPA within thirty calendar days of the end of each year. At a minimum, each report shall contain the following:

(1) Full corporate name and address of the railroad providing the report.

(2) For each locomotive tested, the following:

(i) Corporate name of the manufacturer and last remanufacturer(s) (including both certificate holder and installer, where different) of the locomotive, and the corporate name of the manufacturer or last remanufacturer(s) of the engine if different than that of the manufacturer or remanufacturer(s) of the locomotive;

(ii) Year, and if known month of original manufacture of the locomotive and the engine, and the manufacturer's model designation of the locomotive and manufacturer's model designation of the engine, and the locomotive identification number;

(iii) Year, and if known month that the engine last underwent remanufacture, and the engine remanufacturer's designation which either reflects, or most closely reflects, the engine after the last remanufacture, and the engine family identification;

(iv) The number of MW-hrs and miles (where available) the locomotive has been operated since its last remanufacture; and

(v) The emission test results for all measured pollutants.

(e) Any railroad that performed no emission testing during a given year is exempt from the reporting requirements described in paragraph (d) of this section for that year.

(f) In lieu of some or all of the test data required by this section, railroads may submit equivalent emission data collected for other purposes. The Administrator may also allow emission data collected using other testing or sampling procedures to be submitted in lieu of some or part of the data required by this section with advance approval.

(g) All reports submitted to EPA in compliance with the provisions of this subpart must be addressed to: Group Manager, Engine Compliance Programs Group, Engine Programs and Compliance Division 6403–J, Environmental Protection Agency, 1200 Pennsylvania Ave., NW., Washington, DC 20460.

§ 92.1004 Maintenance and repair.

(a) Unless otherwise approved by the Administrator, all owners of locomotives subject to the provisions of this part shall ensure that all emission-related maintenance is performed on the locomotives, as specified in the maintenance instructions provided by the certifying manufacturer or remanufacturer in compliance with § 92.211 (or maintenance that is equivalent to the maintenance specified by the certifying manufacturer or remanufacturer in terms of maintaining emissions performance).

(b) Unless otherwise approved by the Administrator, all maintenance and repair of locomotives and locomotive engines subject to the provisions of this part performed by any owner, operator or other maintenance provider, including maintenance that is not covered by paragraph (a) of this section, shall be performed, using good engineering judgement, in such a manner that the

locomotive or locomotive engine continues (after the maintenance or repair) to the meet the emission standards or family emission limits (as applicable) it was certified as meeting prior to the need for maintenance or repair.

(c) The owner of the locomotive shall maintain records of all maintenance and repair that could reasonably affect the emission performance of any locomotive or locomotive engine subject to the provision of this part.

§ 92.1005 In-use locomotives.

(a)(1) Any Class I railroad subject to the provisions of this subpart shall supply to the Administrator, upon request, in-use locomotives, selected by the Administrator. The number of locomotives which the Administrator requests under this paragraph (a)(1) shall not exceed five locomotives per railroad per calendar year. These locomotives or engines shall be supplied for testing at such reasonable time and place and for such reasonable periods as the Administrator may require. The Administrator shall make reasonable allowances to the railroad to schedule the supply of locomotives for testing in such a manner that it minimizes disruption of its operational schedule.

(2) Any non-Class I railroad or other entity subject to the provisions of this subpart shall supply to the Administrator, upon request, in-use locomotives, selected by the Administrator. The number of locomotives which the Administrator requests under this paragraph (a)(2) shall not exceed two locomotives per railroad (or other entity) per calendar year. These locomotives or engines shall be supplied for testing at such reasonable time and place and for such reasonable periods as the Administrator may require. The Administrator shall make reasonable allowances to the railroad or other entity to schedule the supply of locomotives for testing in such a manner that it minimizes disruption of its operational schedule. The Administrator shall request locomotives under this paragraph (a)(2) only for purposes which cannot be accomplished using locomotives supplied under paragraph (a)(1) of this section.

(b) Any railroad or other entity subject to the provisions of this subpart shall make reasonable efforts to supply manufacturers and remanufacturers of locomotives and locomotive engines with the test locomotives and locomotive engines needed to fulfill the in-use testing requirements contained in subpart G of this part.

§ 92.1006 Refueling requirements.

(a) Refueling equipment used by a locomotive operator for locomotives fueled with a volatile fuel shall be designed in such a manner so as not to render inoperative or reduce the effectiveness of the controls on the locomotive that are intended to minimize the escape of fuel vapors.

(b) Hoses used to refuel gaseous-fueled locomotives shall not be designed to be bled or vented to the atmosphere under normal operating conditions.

§ 92.1007 Remanufacturing requirements.

(a) See the definition of ''remanufacture'' in § 92.2 to determine if you are remanufacturing your locomotive or engine. (NOTE: Replacing power assemblies one at a time may qualify as remanufacturing, depending on the interval between replacement.)

(b) See the definition of ''new'' in § 92.2 to determine if remanufacturing your locomotive makes it subject to the requirements of this part. If the locomotive is considered to be new, it is subject to the certification requirements of this part, unless it is exempt under subpart J of this part. The standards to which your locomotive is subject will depend on factors such as the following:

(1) Its date of original manufacture.

(2) The FEL to which it was previously certified, which is listed on the ''Locomotive Emission Control Information'' label.

(3) Its power rating (whether it is above or below 2300 hp).

(4) The calendar year in which it is being remanufactured.

(c) You may comply with the certification requirements of this part for your remanufactured locomotive by either obtaining your own certificate of conformity as specified in subpart C of

this part or by having a certifying remanufacturer include your locomotive under its certificate of conformity. In either case, your remanufactured locomotive must be covered by a certificate before it is reintroduced into service.

(d) If you do not obtain your own certificate of conformity from EPA, contact a certifying remanufacturer to have your locomotive included under its certificate of conformity. Confirm with the certificate holder that your locomotive's model, date of original manufacture, previous FEL, and power rating allow it to be covered by the certificate. You must do all of the following:

(1) Comply with the certificate holder's emission-related installation instructions.

(2) Provide to the certificate holder the information it identifies as necessary to comply with the requirements of this part.

(e) For parts unrelated to emissions and emission-related parts not addressed by the certificate holder in the emission-related installation instructions, you may use parts from any source. For emission-related parts listed by the certificate holder in the emission-related installation instructions, you must either use the specified parts or parts certified under 40 CFR 1033.645 for remanufacturing. If you believe that the certificate holder has included as emission-related parts, parts that are actually unrelated to emissions, you may ask us to exclude such parts from the emission-related installation instructions. (NOTE: This paragraph (e) does not apply with respect to parts for maintenance other than remanufacturing; see § 92.1004 for provisions related to general maintenance.)

(f) Failure to comply with this section is a violation of § 92.1102(a)(1).

[73 FR 37195, June 30, 2008]

Subpart L—General Enforcement Provisions and Prohibited Acts

§ 92.1101 Applicability.

The requirements of this subpart are applicable to all manufacturers, remanufacturers, owners and operators of locomotives and locomotive engines subject to the provisions of subpart A of this part.

§ 92.1102 Definitions.

The definitions of subpart A of this part apply to this subpart.

§ 92.1103 Prohibited acts.

(a) The following acts and the causing thereof are prohibited:

(1)(i)(A) In the case of a manufacturer or remanufacturer of new locomotives or new locomotive engines, the sale, the offering for sale, the introduction into commerce, the delivery for introduction into commerce, or the distribution in commerce of any new locomotive or new locomotive engine manufactured or remanufactured after the effective date of applicable emission standards under this part, unless such locomotive or locomotive engine is covered by a certificate of conformity issued (and in effect) under regulations found in this part. (Introduction into commerce includes placement of a new locomotive or new locomotive engine back into service following remanufacturing.)

(B) The manufacture or remanufacture of a locomotive or locomotive engine for the purpose of an act listed in paragraph (a)(1)(i)(A) of this section unless such locomotive or locomotive engine is covered by a certificate of conformity issued (and in effect) under regulations found in this part prior to its introduction into commerce.

(ii) In the case of any person, except as provided in Subpart I of this part, the importation into the United States of any locomotive or locomotive engine manufactured or remanufactured after June 15, 1998, unless such locomotive or locomotive engine is covered by a certificate of conformity issued (and in effect) under regulations found in this part.

(2)(i) For a person to fail or refuse to permit access to or copying of records or to fail to make reports or provide information required under this part.

(ii) For a person to fail or refuse to permit entry, testing, or inspection authorized under this part.

(iii) For a person to fail or refuse to perform tests, or to have tests performed as required by this part.

(iv) For a person to fail to establish or maintain records as required under this part.

(3)(i) For a person to remove or render inoperative a device or element of design installed on or in a locomotive or locomotive engine in compliance with regulations under this part, or to set any adjustable parameter to a setting outside of the range specified by the manufacturer or remanufacturer, as approved in the application for certification by the Administrator.

(ii) For a person to manufacture, remanufacture, sell or offer to sell, or install, a part or component intended for use with, or as part of, a locomotive or locomotive engine, where a principal effect of the part or component is to bypass, defeat, or render inoperative a device or element of design installed on or in a locomotive or locomotive engine in compliance with regulations issued under this part, and where the person knows or should know that the part or component is being offered for sale or installed for this use or put to such use.

(iii) For a locomotive owner or operator to fail to comply with the maintenance and repair requirements of §92.1004.

(4) For a manufacturer or a remanufacturer of a new locomotive or locomotive engine subject to standards prescribed under this part:

(i) To sell, offer for sale, or introduce or deliver for introduction into commerce, a new locomotive or new locomotive engine unless the manufacturer or remanufacturer has complied with the requirements of §92.1107.

(ii) To sell, offer for sale, or introduce or deliver for introduction into commerce, a new locomotive or new locomotive engine unless all required labels and tags are affixed to the engine in accordance with §92.212.

(iii) To fail or refuse to comply with the requirements of §92.1108.

(iv) Except as provided in §92.211, to provide directly or indirectly in any communication to the ultimate purchaser or a subsequent purchaser that the coverage of a warranty under the Act is conditioned upon use of a part, component, or system manufactured by the manufacturer or remanufacturer or a person acting for the manufacturer or remanufacturer or under its control, or conditioned upon service performed by such persons.

(v) To fail or refuse to comply with the terms and conditions of the warranty under §92.1107.

(5) For a manufacturer or remanufacturer of locomotives to distribute in commerce, sell, offer for sale, or deliver for introduction into commerce new locomotives (including all locomotives which contain a new engine) not covered by a certificate of conformity.

(b) For the purposes of enforcement of this part, the following apply:

(1) Nothing in paragraph (a)(3) of this section is to be construed to require the use of any manufacturer's or remanufacturer's parts in maintaining or repairing a locomotive or locomotive engine.

(2) Actions for the purpose of repair or replacement of a device or element of design or any other item are not considered prohibited acts under paragraph (a)(3)(i) of this section if the action is a necessary and temporary procedure, the device or element is replaced upon completion of the procedure, and the action results in the proper functioning of the device or element of design.

(3) Actions for the purpose of remanufacturing a locomotive are not considered prohibited acts under paragraph (a)(3)(i) of this section if the new remanufactured locomotive is covered by a certificate of conformity and complies with all applicable requirements of this part.

§92.1104 General enforcement provisions.

(a) *Information collection provisions.* (1)(i) Every manufacturer or remanufacturer of new locomotives and/or new locomotive engines and other persons subject to the requirements of this part must establish and maintain records, perform tests, make reports and provide information the Administrator may reasonably require to determine whether the manufacturer or remanufacturer or other person has acted or is acting in compliance with this part or to otherwise carry out the provisions of this part, and must, upon request of an officer or employee duly designated

by the Administrator, permit the officer or employee at reasonable times to have access to and copy such records. The manufacturer or remanufacturer shall comply in all respects with the requirements of subpart E of this part.

(ii) Every manufacturer, remanufacturer, owner, or operator of locomotives or locomotive engines exempted from the standards or requirements of this part must establish and maintain records, perform tests, make reports and provide information the Administrator may reasonably require regarding the emissions of such locomotives or locomotive engines.

(2) For purposes of enforcement of this part, an officer or employee duly designated by the Administrator, upon presenting appropriate credentials, is authorized:

(i) To enter, at reasonable times, any establishment of the manufacturer or remanufacturer, or of any person whom the manufacturer or remanufacturer engaged to perform any activity required under paragraph (a)(1) of this section, for the purposes of inspecting or observing any activity conducted pursuant to paragraph (a)(1) of this section; and

(ii) To inspect records, files, papers, processes, controls, and facilities used in performing an activity required by paragraph (a)(1) of this section, by the manufacturer or remanufacturer or by a person whom the manufacturer or remanufacturer engaged to perform the activity.

(b) *Exemption provision*. The Administrator may exempt a new locomotive or new locomotive engine from § 92.1103 upon such terms and conditions as the Administrator may find necessary for the purpose of export, research, investigations, studies, demonstrations, or training, or for reasons of national security, or for other purposes allowed by subpart J of this part.

(c) *Importation provision*. (1) A new locomotive or locomotive engine, offered for importation or imported by a person in violation of § 92.1103 is to be refused admission into the United States, but the Secretary of the Treasury and the Administrator may, by joint regulation, provide for deferring a final determination as to admission and authorizing the delivery of such a locomotive or locomotive engine offered for import to the owner or consignee thereof upon such terms and conditions (including the furnishing of a bond) as may appear to them appropriate to insure that the locomotive or locomotive engine will be brought into conformity with the standards, requirements, and limitations applicable to it under this part.

(2) If a locomotive or locomotive engine is finally refused admission under this paragraph (c), the Secretary of the Treasury shall cause disposition thereof in accordance with the customs laws unless it is exported, under regulations prescribed by the Secretary, within 90 days of the date of notice of the refusal or additional time as may be permitted pursuant to the regulations.

(3) Disposition in accordance with the customs laws may not be made in such manner as may result, directly or indirectly, in the sale, to the ultimate consumer, of a new locomotive or locomotive engine that fails to comply with applicable standards of the Administrator under this part.

(d) *Export provision*. A new locomotive or locomotive engine intended solely for export, and so labeled or tagged on the outside of the container if used and on the engine, shall be subject to the provisions of § 92.1103, except that if the country that is to receive the locomotive or locomotive engine has emission standards that differ from the standards prescribed under subpart A of this part, then the locomotive or locomotive engine must comply with the standards of the country that is to receive the locomotive or locomotive engine.

(e) *Recordkeeping*. Except where specified otherwise, records required by this part must be kept for eight (8) years.

§ 92.1105 Injunction proceedings for prohibited acts.

(a) The district courts of the United States have jurisdiction to restrain violations of § 92.1103(a).

(b) Actions to restrain violations of § 92.1103(a) must be brought by and in the name of the United States. In an action, subpoenas for witnesses who are required to attend a district court in any district may run into any other district.

§92.1106 Penalties.

(a) *Violations.* A violation of the requirements of this subpart is a violation of the applicable provisions of the Act, including sections 213(d) and 203, and is subject to the penalty provisions thereunder.

(1) A person who violates §92.1103 (a)(1), (a)(4), or (a)(5), or a manufacturer, remanufacturer, dealer or railroad who violates §92.1103(a)(3)(i) or (iii) is subject to a civil penalty of not more than $32,500 for each violation.

(2) A person other than a manufacturer, remanufacturer, dealer, or railroad who violates §92.1103(a)(3)(i) or any person who violates §92.1103(a)(3)(ii) is subject to a civil penalty of not more than $2,750 for each violation.

(3) A violation with respect to §92.1103(a)(1), (a)(3)(i), (a)(3)(iii), (a)(4), or (a)(5) constitutes a separate offense with respect to each locomotive or locomotive engine.

(4) A violation with respect to §92.1103(a)(3)(ii) constitutes a separate offense with respect to each part or component. Each day of a violation with respect to §92.1103(a)(5) constitutes a separate offense.

(5) A person who violates §92.1103(a)(2) is subject to a civil penalty of not more than $32,500 per day of violation.

(6) The maximum penalty values listed in this section are shown for calendar year 2004. Maximum penalty limits for later years may be adjusted based on the Consumer Price Index. The specific regulatory provisions for changing the maximum penalties, published in 40 CFR part 19, reference the applicable U.S. Code citation on which the prohibited action is based.

(b) *Civil actions.* The Administrator may commence a civil action to assess and recover any civil penalty under paragraph (a) of this section.

(1) An action under this paragraph (b) may be brought in the district court of the United States for the district in which the defendant resides or has the Administrator's principal place of business, and the court has jurisdiction to assess a civil penalty.

(2) In determining the amount of a civil penalty to be assessed under this paragraph (b), the court is to take into account the gravity of the violation, the economic benefit or savings (if any) resulting from the violation, the size of the violator's business, the violator's history of compliance with Title II of the Act, action taken to remedy the violation, the effect of the penalty on the violator's ability to continue in business, and such other matters as justice may require.

(3) In any such action, subpoenas for witnesses who are required to attend a district court in any district may run into any other district.

(c) *Administrative assessment of certain penalties*—(1) *Administrative penalty authority.* In lieu of commencing a civil action under paragraph (b) of this section, the Administrator may assess any civil penalty prescribed in paragraph (a) of this section, except that the maximum amount of penalty sought against each violator in a penalty assessment proceeding shall not exceed $270,000, unless the Administrator and the Attorney General jointly determine that a matter involving a larger penalty amount is appropriate for administrative penalty assessment. Any such determination by the Administrator and the Attorney General is not subject to judicial review. Assessment of a civil penalty shall be by an order made on the record after opportunity for a hearing held in accordance with the procedures found at part 22 of this chapter. The Administrator may compromise, or remit, with or without conditions, any administrative penalty which may be imposed under this section.

(2) *Determining amount.* In determining the amount of any civil penalty assessed under this paragraph (c), the Administrator shall take into account the gravity of the violation, the economic benefit or savings (if any) resulting from the violation, the size of the violator's business, the violator's history of compliance with Title II of the Act, action taken to remedy the violation, the effect of the penalty on the violator's ability to continue in business, and such other matters as justice may require.

(3) *Effect of administrator's action.* (i) Action by the Administrator under this paragraph (c) does not affect or limit

the Administrator's authority to enforce any provisions of the Act; except that any violation with respect to which the Administrator has commenced and is diligently prosecuting an action under this paragraph (c), or for which the Administrator has issued a final order not subject to further judicial review and for which the violator has paid a penalty assessment under this paragraph shall not be the subject of a civil penalty action under paragraph (b) of this section.

(ii) No action by the Administrator under this paragraph (c) shall affect a person's obligation to comply with a section of this part.

(4) *Finality of order*. An order issued under this paragraph (c) is to become final 30 days after its issuance unless a petition for judicial review is filed under paragraph (c)(5) of this section.

(5) *Judicial review*. A person against whom a civil penalty is assessed in accordance with this paragraph (c) may seek review of the assessment in the United States District Court for the District of Columbia or for the district in which the violation is alleged to have occurred, in which such person resides, or where the person's principal place of business is located, within the 30-day period beginning on the date a civil penalty order is issued. The person shall simultaneously send a copy of the filing by certified mail to the Administrator and the Attorney General. The Administrator shall file in the court within 30 days a certified copy, or certified index, as appropriate, of the record on which the order was issued. The court is not to set aside or remand any order issued in accordance with the requirements of this paragraph (c) unless substantial evidence does not exist in the record, taken as a whole, to support the finding of a violation or unless the Administrator's assessment of the penalty constitutes an abuse of discretion, and the court is not to impose additional civil penalties unless the Administrator's assessment of the penalty constitutes an abuse of discretion. In any proceedings, the United States may seek to recover civil penalties assessed under this section.

(6) *Collection*. (i) If any person fails to pay an assessment of a civil penalty imposed by the Administrator as provided in this part after the order making the assessment has become final or after a court in an action brought under paragraph (c)(5) of this section has entered a final judgment in favor of the Administrator, the Administrator shall request that the Attorney General bring a civil action in an appropriate district court to recover the amount assessed (plus interest at rates established pursuant to section 6621(a)(2) of the Internal Revenue Code of 1986 (26 U.S.C. 6621(a)(2)) from the date of the final order or the date of final judgment, as the case may be). In such an action, the validity, amount, and appropriateness of the penalty is not subject to review.

(ii) A person who fails to pay on a timely basis the amount of an assessment of a civil penalty as described in paragraph (c)(6)(i) of this section shall be required to pay, in addition to that amount and interest, the United States' enforcement expenses, including attorney's fees and costs for collection proceedings, and a quarterly nonpayment penalty for each quarter during which the failure to pay persists. The nonpayment penalty is an amount equal to ten percent of the aggregate amount of that person's penalties and nonpayment penalties which are unpaid as of the beginning of such quarter.

[63 FR 18998, Apr. 16, 1998, as amended at 70 FR 40457, July 13, 2005]

§ 92.1107 Warranty provisions.

(a) The manufacturer or remanufacturer of each locomotive or locomotive engine must warrant to the ultimate purchaser and each subsequent purchaser or owner that the locomotive or locomotive engine is designed, built, and equipped so as to conform at the time of sale or time of return to service following remanufacture with applicable regulations under section 213 of the Act, and is free from defects in materials and workmanship which cause such locomotive or locomotive engine to fail to conform with applicable regulations for its warranty period (as determined under § 92.10).

(b) For the purposes of this section, the owner of any locomotive or locomotive engine warranted under this

part is responsible for the proper maintenance of the locomotive and the locomotive engine. Proper maintenance includes replacement and/or service, as needed, at the owner's expense at a service establishment or facility of the owner's choosing, of all parts, items, or devices which were in general use with locomotives or locomotive engines prior to 1999. For diesel engines, this would generally include replacement or cleaning of the fuel delivery and injection system.

§92.1108 In-use compliance provisions.

(a) Effective with respect to locomotives and locomotive engines subject to the requirements of this part:

(1) If the Administrator determines that a substantial number of any class or category of locomotives or locomotive engines, although properly maintained and used, do not conform to the regulations prescribed under section 213 of the Act when in actual use throughout their useful life period (as defined under §92.2), the Administrator shall immediately notify the manufacturer or remanufacturer of such nonconformity and require the manufacturer or remanufacturer to submit a plan for remedying the nonconformity of the locomotives or locomotive engines with respect to which such notification is given.

(i) The manufacturer's or remanufacturer's plan shall provide that the nonconformity of any such locomotives or locomotive engines which are properly used and maintained will be remedied at the expense of the manufacturer or remanufacturer.

(ii) If the manufacturer or remanufacturer disagrees with such determination of nonconformity and so advises the Administrator, the Administrator shall afford the manufacturer or remanufacturer and other interested persons an opportunity to present their views and evidence in support thereof at a public hearing. Unless, as a result of such hearing, the Administrator withdraws such determination of nonconformity, the Administrator shall, within 60 days after the completion of such hearing, order the manufacturer or remanufacturer to provide prompt notification of such nonconformity in accordance with paragraph (a)(2) of this section. The manufacturer or remanufacturer shall comply in all respects with the requirements of subpart G of this part.

(2) Any notification required to be given by the manufacturer or remanufacturer under paragraph (a)(1) of this section with respect to any class or category of locomotives or locomotive engines shall be given to ultimate purchasers, subsequent purchasers (if known), and dealers (as applicable) in such manner and containing such information as required in Subparts E and H of this part.

(3)(i) The certifying manufacturer or remanufacturer shall furnish with each new locomotive or locomotive engine written instructions for the proper maintenance and use of the engine by the ultimate purchaser as required under §92.211.

(ii) The instruction under paragraph (a)(3)(i) of this section must not include any condition on the ultimate purchaser's using, in connection with such locomotive or locomotive engine, any component or service (other than a component or service provided without charge under the terms of the purchase agreement) which is identified by brand, trade, or corporate name. Such instructions also must not directly or indirectly distinguish between service performed by the franchised dealers of such manufacturer or remanufacturer, or any other service establishments with which such manufacturer or remanufacturer has a commercial relationship, and service performed by independent locomotive or locomotive engine repair facilities with which such manufacturer or remanufacturer has no commercial relationship.

(iii) The prohibition of paragraph (a)(3)(ii) of this section may be waived by the Administrator if:

(A) The manufacturer or remanufacturer satisfies the Administrator that the locomotive or locomotive engine will function properly only if the component or service so identified is used in connection with such engine; and

(B) The Administrator finds that such a waiver is in the public interest.

(iv) In addition, the manufacturer or remanufacturer shall indicate by

means of a label or tag permanently affixed to the locomotive and to the engine that the locomotive and/or the locomotive engine is covered by a certificate of conformity issued for the purpose of assuring achievement of emission standards prescribed under section 213 of the Act. This label or tag shall also contain information relating to control of emissions as prescribed under § 92.212.

(b) The manufacturer or remanufacturer bears all cost obligation any dealer incurs as a result of a requirement imposed by paragraph (a) of this section. The transfer of any such cost obligation from a manufacturer or remanufacturer to a dealer through franchise or other agreement is prohibited.

(c) If a manufacturer or remanufacturer includes in an advertisement a statement respecting the cost or value of emission control devices or systems, the manufacturer or remanufacturer shall set forth in the statement the cost or value attributed to these devices or systems by the Secretary of Labor (through the Bureau of Labor Statistics). The Secretary of Labor, and his or her representatives, has the same access for this purpose to the books, documents, papers, and records of a manufacturer or remanufacturer as the Comptroller General has to those of a recipient of assistance for purposes of section 311 of the Act.

APPENDIX I TO PART 92—EMISSION RELATED LOCOMOTIVE AND ENGINE PARAMETERS AND SPECIFICATIONS

I. Basic Engine Parameters—Reciprocating Engines.
  1. Compression ratio.
  2. Type of air aspiration (natural, Roots blown, supercharged, turbocharged).
  3. Valves (intake and exhaust).
    a. Head diameter dimension.
    b. Valve lifter or actuator type and valve lash dimension.
  4. Camshaft timing.
    a. Valve opening—intake exhaust (degrees from TDC or BDC).
    b. Valve closing—intake exhaust (degrees from TDC or BDC).
    c. Valve overlap (degrees).
  5. Ports—two stroke engines (intake and/or exhaust).
    a. Flow area.
    b. Opening timing (degrees from TDC or BDC).
    c. Closing timing (degrees from TDC or BDC).

II. Intake Air System.
  1. Roots blower/supercharger/turbocharger calibration.
  2. Charge air cooling.
    a. Type (air-to-air; air-to-liquid).
    b. Type of liquid cooling (engine coolant, dedicated cooling system).
    c. Performance (charge air delivery temperature (°F) at rated power and one other power level under ambient conditions of 80 °F and 110 °F, and 3 minutes and 15 minutes after selecting rated power, and 3 minutes and 5 minutes after selecting other power level).
  3. Temperature control system calibration.
  4. Maximum allowable inlet air restriction.

III. Fuel System.
  1. General.
    a. Engine idle speed.
  2. Carburetion.
    a. Air-fuel flow calibration.
    b. Idle mixture.
    c. Transient enrichment system calibration.
    d. Starting enrichment system calibration.
    e. Altitude compensation system calibration.
    f. Hot idle compensation system calibration.
  3. Fuel injection—non-compression ignition engines.
    a. Control parameters and calibrations.
    b. Idle mixture.
    c. Fuel shutoff system calibration.
    d. Starting enrichment system calibration.
    e. Transient enrichment system calibration.
    f. Air-fuel flow calibration.
    g. Altitude compensation system calibration.
    h. Operating pressure(s).
    i. Injector timing calibration.
  4. Fuel injection—compression ignition engines.
    a. Control parameters and calibrations.
    b. Transient enrichment system calibration.
    c. Air-fuel flow calibration.
    d. Altitude compensation system calibration.
    e. Operating pressure(s).
    f. Injector timing calibration.

IV. Ignition System—non-compression ignition engines.
  1. Control parameters and calibration.
  2. Initial timing setting.
  3. Dwell setting.
  4. Altitude compensation system calibration.
  5. Spark plug voltage.

V. Engine Cooling System.
  1. Thermostat calibration.

VI. Exhaust System.

1. Maximum allowable back pressure.
VII. Exhaust Emission Control System.
1. Air injection system.
a. Control parameters and calibrations.
b. Pump flow rate.
2. EGR system.
a. Control parameters and calibrations.
b. EGR valve flow calibration.
3. Catalytic converter system.
a. Active surface area.
b. Volume of catalyst.
c. Conversion efficiency.
4. Backpressure.
VIII. Crankcase Emission Control System.
1. Control parameters and calibrations.
2. Valve calibrations.
IX. Auxiliary Emission Control Devices (AECD).
1. Control parameters and calibrations.
2. Component calibration(s).
X. Evaporative Emission Control System.
1. Control parameters and calibrations.
2. Fuel tank.
a. Volume.
b. Pressure and vacuum relief settings.

APPENDIX II TO PART 92—INTERPRETIVE RULING FOR § 92.705—REMEDIAL PLANS

The following is an interpretive ruling set forth previously by EPA for on-highway vehicles. EPA expects to apply the same principles to locomotives.

(1) The purpose of this ruling is to set forth EPA's interpretation regarding one aspect of a motor vehicle or motor vehicle engine manufacturer's recall liability under section 207(c)(1) of the Clean Air Act, 42 U.S.C. 7641(c)(1). This ruling will provide guidance to vehicle and engine manufacturers to better enable them to submit acceptable remedial plans.

(2) Section 207(c)(1) requires the Administrator to base a recall order on a determination that a substantial number of in-use vehicles or engines within a given class or category of vehicles or engines, although properly maintained and used, fail to conform to the regulations prescribed under section 202 when in actual use throughout their useful lives. After making such a determination, he shall require the manufacturer to submit a plan to remedy the nonconformity of any such vehicles or engines. The plan shall provide that the manufacturer will remedy, at the manufacturer's expense, all properly maintained and used vehicles which experienced the nonconformity during their useful lives regardless of their age or mileage at the time of repair.

APPENDIX III TO PART 92—SMOKE STANDARDS FOR NON-NORMALIZED MEASUREMENTS

TABLE III-1—EQUIVALENT SMOKE STANDARDS FOR NON-NORMALIZED MEASUREMENTS

Path length		Standards				
If the path length is:		Then the opacity may not exceed:				
cm	inches	Peak		Steady-State		
		3-sec	30-sec	Tier 0	Tier 1	Tier 2
10.0–19.9	3.94–7.86	7	5	4	3	2
20.0–29.9	7.87–11.80	13	10	7	6	4
30.0–39.9	11.81–15.74	19	14	10	8	6
40.0–49.9	15.75–19.68	24	18	13	11	9
50.0–59.9	19.69–23.61	29	23	16	13	11
60.0–69.9	23.62–27.55	34	26	19	16	13
70.0–79.9	27.56–31.49	38	30	22	18	14
80.0–89.9	31.50–35.42	43	34	25	21	16
90.0–99.9	35.43–39.36	46	37	27	23	18
100.0–109.9	39.37–43.30	50	40	30	25	20
110.0–119.9	43.31–47.23	53	43	32	27	22
120.0–129.9	47.24–51.17	56	46	35	29	23
130.0–139.9	51.18–55.11	59	49	37	31	25
140.0–149.9	55.12–59.05	62	51	39	33	27
150.0–159.9	59.06–62.98	65	54	41	35	28
160.0–169.9	62.99–66.92	67	56	43	37	30
170.0–179.9	66.93–70.86	69	58	45	39	32
180.0–189.9	70.87–74.79	71	60	47	40	33
190.0–199.9	74.80–78.73	73	62	49	42	35
≥200	≥78.74	75	64	51	44	36

APPENDIX IV TO PART 92—GUIDELINES FOR DETERMINING EQUIVALENCY BETWEEN EMISSION MEASUREMENT SYSTEMS

This appendix describes a series of correlation criteria that EPA considers to be reasonable for the purpose of demonstrating equivalency between two test systems designed to measure the same emissions during FTP locomotive testing. These criteria are presented here only as guidelines. When requested to make a finding of equivalency, EPA could base its decision on criteria other than those listed here, where EPA has reason to believe that these criteria are not appropriate.

(a) *General approach.* (1) Multiple tests should be conducted in pairs on the same locomotive or engine using each of the measurement systems.

(2) Variations for other parameters, such as test fuel, should be minimized to the maximum extent possible.

(3) Locomotive and/or locomotive engine tests conducted in accordance with the provisions of Subpart B of this part are preferred. Where appropriate, engine tests conducted in accordance with 40 CFR part 89 may also be used.

(4) Equivalency of the systems should be determined by comparing individual modal data, individual cycle-weighted data, and the average cycle-weighted results from each system.

(b) *Correlation criteria for particulate measurements.* (1) The correlation coefficient (R^2) for individual modal data should be 0.90, or higher.

(2) The maximum deviation between any pair of cycle-weighted data should be 15 percent, or less.

(3) The ratio of average cycle-weighted results using the alternate system to the average cycle-weighted results using the specified Part 92 system (i.e., avg_{alt}/avg_{spc}) should be between 0.97 and 1.05.

(c) *Correlation criteria for other measurements.* Correlation parameters for gaseous pollutants should be better than those specified in paragraph (b) of this appendix for particulate measurements.

(d) *Minimum number of tests.* The recommended minimum number of tests with each system necessary to determine equivalency is:

(1) Four locomotive or locomotive engine tests, conducted in accordance with the provisions of subpart B of this part; or

(2) Seven 8-mode nonroad engine tests, conducted in accordance with the provisions of 40 CFR part 89.

(e) *Statistical outliers.* Statistical outliers may be excluded consistent with good engineering judgement. Outliers should be replaced by rerunning each excluded test point. Where more than one outlier is excluded, is recommended to perform one additional pair of tests (in addition to the minimum number specified in paragraph (d) of this appendix) for each two outliers excluded.

[63 FR 18998, Apr. 16, 1998, as amended at 70 FR 40457, July 13, 2005]

PART 93—DETERMINING CONFORMITY OF FEDERAL ACTIONS TO STATE OR FEDERAL IMPLEMENTATION PLANS

Subpart A—Conformity to State or Federal Implementation Plans of Transportation Plans, Programs, and Projects Developed, Funded or Approved Under Title 23 U.S.C. or the Federal Transit Laws

Sec.

93.100 Purpose.
93.101 Definitions.
93.102 Applicability.
93.103 Priority.
93.104 Frequency of conformity determinations.
93.105 Consultation.
93.106 Content of transportation plans and timeframe of conformity determinations.
93.107 Relationship of transportation plan and TIP conformity with the NEPA process.
93.108 Fiscal constraints for transportation plans and TIPs.
93.109 Criteria and procedures for determining conformity of transportation plans, programs, and projects: General.
93.110 Criteria and procedures: Latest planning assumptions.
93.111 Criteria and procedures: Latest emissions model.
93.112 Criteria and procedures: Consultation.
93.113 Criteria and procedures: Timely implementation of TCMs.
93.114 Criteria and procedures: Currently conforming transportation plan and TIP.
93.115 Criteria and procedures: Projects from a transportation plan and TIP.
93.116 Criteria and procedures: Localized CO, PM_{10}, and $PM_{2.5}$ violations (hotspots).
93.117 Criteria and procedures: Compliance with PM_{10} and $PM_{2.5}$ control measures.
93.118 Criteria and procedures: Motor vehicle emissions budget.
93.119 Criteria and procedures: Interim emissions in areas without motor vehicle emissions budgets.
93.120 Consequences of control strategy implementation plan failures.
93.121 Requirements for adoption or approval of projects by other recipients of funds designated under title 23 U.S.C. or the Federal Transit Laws.

93.122 Procedures for determining regional transportation-related emissions.
93.123 Procedures for determining localized CO, PM_{10}, and $PM_{2.5}$ concentrations (hot-spot analysis).
93.124 Using the motor vehicle emissions budget in the applicable implementation plan (or implementation plan submission).
93.125 Enforceability of design concept and scope and project-level mitigation and control measures.
93.126 Exempt projects.
93.127 Projects exempt from regional emissions analyses.
93.128 Traffic signal synchronization projects.
93.129 Special exemptions from conformity requirements for pilot program areas.

Subpart B—Determining Conformity of General Federal Actions to State or Federal Implementation Plans

93.150 Prohibition.
93.151 State implementation plan (SIP) revision.
93.152 Definitions.
93.153 Applicability.
93.154 Conformity analysis.
93.155 Reporting requirements.
93.156 Public participation.
93.157 Frequency of conformity determinations.
93.158 Criteria for determining conformity of general Federal actions.
93.159 Procedures for conformity determinations of general Federal actions.
93.160 Mitigation of air quality impacts.
93.161 Conformity evaluation for Federal installations with facility-wide emission budgets.
93.162 Emissions beyond the time period covered by the SIP.
93.163 Timing of offsets and mitigation measures.
93.164 Inter-precursor mitigation measures and offsets.
93.165 Early emission reduction credit programs at Federal facilities and installation subject to Federal oversight.

AUTHORITY: 42 U.S.C. 7401–7671q.

SOURCE: 58 FR 62235, Nov. 24, 1993, unless otherwise noted.

Subpart A—Conformity to State or Federal Implementation Plans of Transportation Plans, Programs, and Projects Developed, Funded or Approved Under Title 23 U.S.C. or the Federal Transit Laws

SOURCE: 62 FR 43801, Aug. 15, 1997, unless otherwise noted.

§93.100 Purpose.

The purpose of this subpart is to implement section 176(c) of the Clean Air Act (CAA), as amended (42 U.S.C. 7401 *et seq.*), and the related requirements of 23 U.S.C. 109(j), with respect to the conformity of transportation plans, programs, and projects which are developed, funded, or approved by the United States Department of Transportation (DOT), and by metropolitan planning organizations (MPOs) or other recipients of funds under title 23 U.S.C. or the Federal Transit Laws (49 U.S.C. Chapter 53). This subpart sets forth policy, criteria, and procedures for demonstrating and assuring conformity of such activities to an applicable implementation plan developed pursuant to section 110 and Part D of the CAA.

§93.101 Definitions.

Terms used but not defined in this subpart shall have the meaning given them by the CAA, titles 23 and 49 U.S.C., other Environmental Protection Agency (EPA) regulations, or other DOT regulations, in that order of priority.

Applicable implementation plan is defined in section 302(q) of the CAA and means the portion (or portions) of the implementation plan, or most recent revision thereof, which has been approved under section 110, or promulgated under section 110(c), or promulgated or approved pursuant to regulations promulgated under section 301(d) and which implements the relevant requirements of the CAA.

CAA means the Clean Air Act, as amended (42 U.S.C. 7401 *et seq.*).

Cause or contribute to a new violation for a project means:

(1) To cause or contribute to a new violation of a standard in the area substantially affected by the project or over a region which would otherwise not be in violation of the standard during the future period in question, if the project were not implemented; or

(2) To contribute to a new violation in a manner that would increase the frequency or severity of a new violation of a standard in such area.

Clean data means air quality monitoring data determined by EPA to meet the requirements of 40 CFR part 58 that indicate attainment of the national ambient air quality standard.

Control strategy implementation plan revision is the implementation plan which contains specific strategies for controlling the emissions of and reducing ambient levels of pollutants in order to satisfy CAA requirements for demonstrations of reasonable further progress and attainment (including implementation plan revisions submitted to satisfy CAA sections 172(c), 182(b)(1), 182(c)(2)(A), 182(c)(2)(B), 187(a)(7), 187(g), 189(a)(1)(B), 189(b)(1)(A), and 189(d); sections 192(a) and 192(b), for nitrogen dioxide; and any other applicable CAA provision requiring a demonstration of reasonable further progress or attainment).

Design concept means the type of facility identified by the project, e.g., freeway, expressway, arterial highway, grade-separated highway, reserved right-of-way rail transit, mixed-traffic rail transit, exclusive busway, etc.

Design scope means the design aspects which will affect the proposed facility's impact on regional emissions, usually as they relate to vehicle or person carrying capacity and control, e.g., number of lanes or tracks to be constructed or added, length of project, signalization, access control including approximate number and location of interchanges, preferential treatment for high-occupancy vehicles, etc.

DOT means the United States Department of Transportation.

Donut areas are geographic areas outside a metropolitan planning area boundary, but inside the boundary of a nonattainment or maintenance area that contains any part of a metropolitan area(s). These areas are not isolated rural nonattainment and maintenance areas.

EPA means the Environmental Protection Agency.

FHWA means the Federal Highway Administration of DOT.

FHWA/FTA project, for the purpose of this subpart, is any highway or transit project which is proposed to receive funding assistance and approval through the Federal-Aid Highway program or the Federal mass transit program, or requires Federal Highway Administration (FHWA) or Federal Transit Administration (FTA) approval for some aspect of the project, such as connection to an interstate highway or deviation from applicable design standards on the interstate system.

Forecast period with respect to a transportation plan is the period covered by the transportation plan pursuant to 23 CFR part 450.

FTA means the Federal Transit Administration of DOT.

Highway project is an undertaking to implement or modify a highway facility or highway-related program. Such an undertaking consists of all required phases necessary for implementation. For analytical purposes, it must be defined sufficiently to:

(1) Connect logical termini and be of sufficient length to address environmental matters on a broad scope;

(2) Have independent utility or significance, i.e., be usable and be a reasonable expenditure even if no additional transportation improvements in the area are made; and

(3) Not restrict consideration of alternatives for other reasonably foreseeable transportation improvements.

Horizon year is a year for which the transportation plan describes the envisioned transportation system according to § 93.106.

Hot-spot analysis is an estimation of likely future localized CO, PM_{10}, and/or $PM_{2.5}$ pollutant concentrations and a comparison of those concentrations to the national ambient air quality standards. Hot-spot analysis assesses impacts on a scale smaller than the entire nonattainment or maintenance area, including, for example, congested roadway intersections and highways or

transit terminals, and uses an air quality dispersion model to determine the effects of emissions on air quality.

Increase the frequency or severity means to cause a location or region to exceed a standard more often or to cause a violation at a greater concentration than previously existed and/or would otherwise exist during the future period in question, if the project were not implemented.

Isolated rural nonattainment and maintenance areas are areas that do not contain or are not part of any metropolitan planning area as designated under the transportation planning regulations. Isolated rural areas do not have Federally required metropolitan transportation plans or TIPs and do not have projects that are part of the emissions analysis of any MPO's metropolitan transportation plan or TIP. Projects in such areas are instead included in statewide transportation improvement programs. These areas are not donut areas.

Lapse means that the conformity determination for a transportation plan or TIP has expired, and thus there is no currently conforming transportation plan and TIP.

Limited maintenance plan is a maintenance plan that EPA has determined meets EPA's limited maintenance plan policy criteria for a given NAAQS and pollutant. To qualify for a limited maintenance plan, for example, an area must have a design value that is significantly below a given NAAQS, and it must be reasonable to expect that a NAAQS violation will not result from any level of future motor vehicle emissions growth.

Maintenance area means any geographic region of the United States previously designated nonattainment pursuant to the CAA Amendments of 1990 and subsequently redesignated to attainment subject to the requirement to develop a maintenance plan under section 175A of the CAA, as amended.

Maintenance plan means an implementation plan under section 175A of the CAA, as amended.

Metropolitan planning organization (MPO) means the policy board of an organization created as a result of the designation process in 23 U.S.C. 134(d).

Milestone has the meaning given in CAA sections 182(g)(1) and 189(c) for serious and above ozone nonattainment areas and PM_{10} nonattainment areas, respectively. For all other nonattainment areas, a milestone consists of an emissions level and the date on which that level is to be achieved as required by the applicable CAA provision for reasonable further progress towards attainment.

Motor vehicle emissions budget is that portion of the total allowable emissions defined in the submitted or approved control strategy implementation plan revision or maintenance plan for a certain date for the purpose of meeting reasonable further progress milestones or demonstrating attainment or maintenance of the NAAQS, for any criteria pollutant or its precursors, allocated to highway and transit vehicle use and emissions.

National ambient air quality standards (NAAQS) are those standards established pursuant to section 109 of the CAA.

(1) *1-hour ozone NAAQS* means the 1-hour ozone national ambient air quality standard codified at 40 CFR 50.9.

(2) *8-hour ozone NAAQS* means the 8-hour ozone national ambient air quality standard codified at 40 CFR 50.10.

(3) 24-hour PM_{10} NAAQS means the 24-hour PM_{10} national ambient air quality standard codified at 40 CFR 50.6.

(4) *1997 $PM_{2.5}$ NAAQS* means the $PM_{2.5}$ national ambient air quality standards codified at 40 CFR 50.7.

(5) *2006 $PM_{2.5}$ NAAQS* means the 24-hour $PM_{2.5}$ national ambient air quality standard codified at 40 CFR 50.13.

(6) *Annual PM_{10} NAAQS* means the annual PM_{10} national ambient air quality standard that EPA revoked on December 18, 2006.

NEPA means the National Environmental Policy Act of 1969, as amended (42 U.S.C. 4321 *et seq.*).

NEPA process completion, for the purposes of this subpart, with respect to FHWA or FTA, means the point at which there is a specific action to make a determination that a project is categorically excluded, to make a Finding of No Significant Impact, or to issue a record of decision on a Final Environmental Impact Statement under NEPA.

Nonattainment area means any geographic region of the United States which has been designated as nonattainment under section 107 of the CAA for any pollutant for which a national ambient air quality standard exists.

Project means a highway project or transit project.

Protective finding means a determination by EPA that a submitted control strategy implementation plan revision contains adopted control measures or written commitments to adopt enforceable control measures that fully satisfy the emissions reductions requirements relevant to the statutory provision for which the implementation plan revision was submitted, such as reasonable further progress or attainment.

Recipient of funds designated under title 23 U.S.C. or the Federal Transit Laws means any agency at any level of State, county, city, or regional government that routinely receives title 23 U.S.C. or Federal Transit Laws funds to construct FHWA/FTA projects, operate FHWA/FTA projects or equipment, purchase equipment, or undertake other services or operations via contracts or agreements. This definition does not include private landowners or developers, or contractors or entities that are only paid for services or products created by their own employees.

Regionally significant project means a transportation project (other than an exempt project) that is on a facility which serves regional transportation needs (such as access to and from the area outside of the region, major activity centers in the region, major planned developments such as new retail malls, sports complexes, etc., or transportation terminals as well as most terminals themselves) and would normally be included in the modeling of a metropolitan area's transportation network, including at a minimum all principal arterial highways and all fixed guideway transit facilities that offer an alternative to regional highway travel.

Safety margin means the amount by which the total projected emissions from all sources of a given pollutant are less than the total emissions that would satisfy the applicable requirement for reasonable further progress, attainment, or maintenance.

Standard means a national ambient air quality standard.

Transit is mass transportation by bus, rail, or other conveyance which provides general or special service to the public on a regular and continuing basis. It does not include school buses or charter or sightseeing services.

Transit project is an undertaking to implement or modify a transit facility or transit-related program; purchase transit vehicles or equipment; or provide financial assistance for transit operations. It does not include actions that are solely within the jurisdiction of local transit agencies, such as changes in routes, schedules, or fares. It may consist of several phases. For analytical purposes, it must be defined inclusively enough to:

(1) Connect logical termini and be of sufficient length to address environmental matters on a broad scope;

(2) Have independent utility or independent significance, i.e., be a reasonable expenditure even if no additional transportation improvements in the area are made; and

(3) Not restrict consideration of alternatives for other reasonably foreseeable transportation improvements.

Transportation control measure (TCM) is any measure that is specifically identified and committed to in the applicable implementation plan, including a substitute or additional TCM that is incorporated into the applicable SIP through the process established in CAA section 176(c)(8), that is either one of the types listed in CAA section 108, or any other measure for the purpose of reducing emissions or concentrations of air pollutants from transportation sources by reducing vehicle use or changing traffic flow or congestion conditions. Notwithstanding the first sentence of this definition, vehicle technology-based, fuel-based, and maintenance-based measures which control the emissions from vehicles under fixed traffic conditions are not TCMs for the purposes of this subpart.

Transportation improvement program (TIP) means a transportation improvement program developed by a metropolitan planning organization under 23 U.S.C. 134(j).

Transportation plan means the official intermodal metropolitan transportation plan that is developed through the metropolitan planning process for the metropolitan planning area, developed pursuant to 23 CFR part 450.

Transportation project is a highway project or a transit project.

Written commitment for the purposes of this subpart means a written commitment that includes a description of the action to be taken; a schedule for the completion of the action; a demonstration that funding necessary to implement the action has been authorized by the appropriating or authorizing body; and an acknowledgment that the commitment is an enforceable obligation under the applicable implementation plan.

[62 FR 43801, Aug. 15, 1997, as amended at 69 FR 40072, July 1, 2004; 71 FR 12510, Mar. 10, 2006; 73 FR 4439, Jan. 24, 2008; 75 FR 14283, Mar. 24, 2010]

§ 93.102 Applicability.

(a) *Action applicability*. (1) Except as provided for in paragraph (c) of this section or § 93.126, conformity determinations are required for:

(i) The adoption, acceptance, approval or support of transportation plans and transportation plan amendments developed pursuant to 23 CFR part 450 or 49 CFR part 613 by an MPO or DOT;

(ii) The adoption, acceptance, approval or support of TIPs and TIP amendments developed pursuant to 23 CFR part 450 or 49 CFR part 613 by an MPO or DOT; and

(iii) The approval, funding, or implementation of FHWA/FTA projects.

(2) Conformity determinations are not required under this subpart for individual projects which are not FHWA/FTA projects. However, § 93.121 applies to such projects if they are regionally significant.

(b) *Geographic applicability*. The provisions of this subpart shall apply in all nonattainment and maintenance areas for transportation-related criteria pollutants for which the area is designated nonattainment or has a maintenance plan.

(1) The provisions of this subpart apply with respect to emissions of the following criteria pollutants: ozone, carbon monoxide (CO), nitrogen dioxide (NO_2), particles with an aerodynamic diameter less than or equal to a nominal 10 micrometers (PM_{10}); and particles with an aerodynamic diameter less than or equal to a nominal 2.5 micrometers ($PM_{2.5}$).

(2) The provisions of this subpart also apply with respect to emissions of the following precursor pollutants:

(i) Volatile organic compounds (VOC) and nitrogen oxides (NO_X) in ozone areas;

(ii) NO_X in NO_2 areas;

(iii) VOC and/or NO_X in PM_{10} areas if the EPA Regional Administrator or the director of the State air agency has made a finding that transportation-related emissions of one or both of these precursors within the nonattainment area are a significant contributor to the PM_{10} nonattainment problem and has so notified the MPO and DOT, or if the applicable implementation plan (or implementation plan submission) establishes an approved (or adequate) budget for such emissions as part of the reasonable further progress, attainment or maintenance strategy;

(iv) NO_X in $PM_{2.5}$ areas, unless both the EPA Regional Administrator and the director of the state air agency have made a finding that transportation-related emissions of NO_X within the nonattainment area are not a significant contributor to the $PM_{2.5}$ nonattainment problem and has so notified the MPO and DOT, or the applicable implementation plan (or implementation plan submission) does not establish an approved (or adequate) budget for such emissions as part of the reasonable further progress, attainment or maintenance strategy; and

(v) VOC, sulfur dioxide (SO_2) and/or ammonia (NH3) in $PM_{2.5}$ areas either if the EPA Regional Administrator or the director of the state air agency has made a finding that transportation-related emissions of any of these precursors within the nonattainment area are a significant contributor to the $PM_{2.5}$ nonattainment problem and has so notified the MPO and DOT, or if the applicable implementation plan (or implementation plan submission) establishes an approved (or adequate) budget

for such emissions as part of the reasonable further progress, attainment or maintenance strategy.

(3) The provisions of this subpart apply to $PM_{2.5}$ nonattainment and maintenance areas with respect to $PM_{2.5}$ from re-entrained road dust if the EPA Regional Administrator or the director of the State air agency has made a finding that re-entrained road dust emissions within the area are a significant contributor to the $PM_{2.5}$ nonattainment problem and has so notified the MPO and DOT, or if the applicable implementation plan (or implementation plan submission) includes re-entrained road dust in the approved (or adequate) budget as part of the reasonable further progress, attainment or maintenance strategy. Re-entrained road dust emissions are produced by travel on paved and unpaved roads (including emissions from anti-skid and deicing materials).

(4) The provisions of this subpart apply to maintenance areas through the last year of a maintenance area's approved CAA section 175A(b) maintenance plan, unless the applicable implementation plan specifies that the provisions of this subpart shall apply for more than 20 years.

(c) *Limitations.* In order to receive any FHWA/FTA approval or funding actions, including NEPA approvals, for a project phase subject to this subpart, a currently conforming transportation plan and TIP must be in place at the time of project approval as described in § 93.114, except as provided by § 93.114(b).

(d) *Grace period for new nonattainment areas.* For areas or portions of areas which have been continuously designated attainment or not designated for any NAAQS for ozone, CO, PM_{10}, $PM_{2.5}$ or NO_2 since 1990 and are subsequently redesignated to nonattainment or designated nonattainment for any NAAQS for any of these pollutants, the provisions of this subpart shall not apply with respect to that NAAQS for 12 months following the effective date of final designation to nonattainment for each NAAQS for such pollutant.

[62 FR 43801, Aug. 15, 1997, as amended at 65 FR 18918, Apr. 10, 2000; 67 FR 50817, Aug. 6, 2002; 69 FR 40072, July 1, 2004; 70 FR 24291, May 6, 2005; 73 FR 4439, Jan. 24, 2008]

§ 93.103 Priority.

When assisting or approving any action with air quality-related consequences, FHWA and FTA shall give priority to the implementation of those transportation portions of an applicable implementation plan prepared to attain and maintain the NAAQS. This priority shall be consistent with statutory requirements for allocation of funds among States or other jurisdictions.

§ 93.104 Frequency of conformity determinations.

(a) Conformity determinations and conformity redeterminations for transportation plans, TIPs, and FHWA/FTA projects must be made according to the requirements of this section and the applicable implementation plan.

(b) *Frequency of conformity determinations for transportation plans.* (1) Each new transportation plan must be demonstrated to conform before the transportation plan is approved by the MPO or accepted by DOT.

(2) All transportation plan amendments must be found to conform before the transportation plan amendments are approved by the MPO or accepted by DOT, unless the amendment merely adds or deletes exempt projects listed in § 93.126 or § 93.127. The conformity determination must be based on the transportation plan and the amendment taken as a whole.

(3) The MPO and DOT must determine the conformity of the transportation plan (including a new regional emissions analysis) no less frequently than every four years. If more than four years elapse after DOT's conformity determination without the MPO and DOT determining conformity of the transportation plan, a 12-month grace period will be implemented as described in paragraph (f) of this section. At the end of this 12-month grace period, the existing conformity determination will lapse.

(c) *Frequency of conformity determinations for transportation improvement programs.* (1) A new TIP must be demonstrated to conform before the TIP is approved by the MPO or accepted by DOT.

(2) A TIP amendment requires a new conformity determination for the entire TIP before the amendment is approved by the MPO or accepted by DOT, unless the amendment merely adds or deletes exempt projects listed in § 93.126 or § 93.127.

(3) The MPO and DOT must determine the conformity of the TIP (including a new regional emissions analysis) no less frequently than every four years. If more than four years elapse after DOT's conformity determination without the MPO and DOT determining conformity of the TIP, a 12-month grace period will be implemented as described in paragraph (f) of this section. At the end of this 12-month grace period, the existing conformity determination will lapse.

(d) *Projects*. FHWA/FTA projects must be found to conform before they are adopted, accepted, approved, or funded. Conformity must be redetermined for any FHWA/FTA project if one of the following occurs: a significant change in the project's design concept and scope; three years elapse since the most recent major step to advance the project; or initiation of a supplemental environmental document for air quality purposes. Major steps include NEPA process completion; start of final design; acquisition of a significant portion of the right-of-way; and, construction (including Federal approval of plans, specifications and estimates).

(e) *Triggers for transportation plan and TIP conformity determinations*. Conformity of existing transportation plans and TIPs must be redetermined within two years of the following, or after a 12-month grace period (as described in paragraph (f) of this section) the existing conformity determination will lapse, and no new project-level conformity determinations may be made until conformity of the transportation plan and TIP has been determined by the MPO and DOT:

(1) The effective date of EPA's finding that motor vehicle emissions budgets from an initially submitted control strategy implementation plan or maintenance plan are adequate pursuant to § 93.118(e) and can be used for transportation conformity purposes;

(2) The effective date of EPA approval of a control strategy implementation plan revision or maintenance plan which establishes or revises a motor vehicle emissions budget if that budget has not yet been used in a conformity determination prior to approval; and

(3) The effective date of EPA promulgation of an implementation plan which establishes or revises a motor vehicle emissions budget.

(f) *Lapse grace period*. During the 12-month grace period referenced in paragraphs (b)(3), (c)(3), and (e) of this section, a project may be found to conform according to the requirements of this part if:

(1) The project is included in the currently conforming transportation plan and TIP (or regional emissions analysis); or

(2) the project is included in the most recent conforming transportation plan and TIP (or regional emissions analysis).

[62 FR 43801, Aug. 15, 1997, as amended at 67 FR 50817, Aug. 6, 2002; 69 FR 40072, July 1, 2004; 73 FR 4439, Jan. 24, 2008]

§ 93.105 Consultation.

(a) *General*. The implementation plan revision required under § 51.390 of this chapter shall include procedures for interagency consultation (Federal, State, and local), resolution of conflicts, and public consultation as described in paragraphs (a) through (e) of this section. Public consultation procedures will be developed in accordance with the requirements for public involvement in 23 CFR part 450.

(1) The implementation plan revision shall include procedures to be undertaken by MPOs, State departments of transportation, and DOT with State and local air quality agencies and EPA before making conformity determinations, and by State and local air agencies and EPA with MPOs, State departments of transportation, and DOT in developing applicable implementation plans.

(2) Before EPA approves the conformity implementation plan revision required by § 51.390 of this chapter, MPOs and State departments of transportation must provide reasonable opportunity for consultation with State

air agencies, local air quality and transportation agencies, DOT, and EPA, including consultation on the issues described in paragraph (c)(1) of this section, before making conformity determinations.

(b) *Interagency consultation procedures: General factors.* (1) States shall provide well-defined consultation procedures in the implementation plan whereby representatives of the MPOs, State and local air quality planning agencies, State and local transportation agencies, and other organizations with responsibilities for developing, submitting, or implementing provisions of an implementation plan required by the CAA must consult with each other and with local or regional offices of EPA, FHWA, and FTA on the development of the implementation plan, the transportation plan, the TIP, and associated conformity determinations.

(2) Interagency consultation procedures shall include at a minimum the following general factors and the specific processes in paragraph (c) of this section:

(i) The roles and responsibilities assigned to each agency at each stage in the implementation plan development process and the transportation planning process, including technical meetings;

(ii) The organizational level of regular consultation;

(iii) A process for circulating (or providing ready access to) draft documents and supporting materials for comment before formal adoption or publication;

(iv) The frequency of, or process for convening, consultation meetings and responsibilities for establishing meeting agendas;

(v) A process for responding to the significant comments of involved agencies; and

(vi) A process for the development of a list of the TCMs which are in the applicable implementation plan.

(c) *Interagency consultation procedures: Specific processes.* Interagency consultation procedures shall also include the following specific processes:

(1) A process involving the MPO, State and local air quality planning agencies, State and local transportation agencies, EPA, and DOT for the following:

(i) Evaluating and choosing a model (or models) and associated methods and assumptions to be used in hot-spot analyses and regional emissions analyses;

(ii) Determining which minor arterials and other transportation projects should be considered ''regionally significant'' for the purposes of regional emissions analysis (in addition to those functionally classified as principal arterial or higher or fixed guideway systems or extensions that offer an alternative to regional highway travel), and which projects should be considered to have a significant change in design concept and scope from the transportation plan or TIP;

(iii) Evaluating whether projects otherwise exempted from meeting the requirements of this subpart (see §§ 93.126 and 93.127) should be treated as non-exempt in cases where potential adverse emissions impacts may exist for any reason;

(iv) Making a determination, as required by § 93.113(c)(1), whether past obstacles to implementation of TCMs which are behind the schedule established in the applicable implementation plan have been identified and are being overcome, and whether State and local agencies with influence over approvals or funding for TCMs are giving maximum priority to approval or funding for TCMs. This process shall also consider whether delays in TCM implementation necessitate revisions to the applicable implementation plan to remove TCMs or substitute TCMs or other emission reduction measures;

(v) Notification of transportation plan or TIP amendments which merely add or delete exempt projects listed in § 93.126 or § 93.127; and

(vi) Choosing conformity tests and methodologies for isolated rural nonattainment and maintenance areas, as required by § 93.109(n)(2)(iii).

(2) A process involving the MPO and State and local air quality planning agencies and transportation agencies for the following:

(i) Evaluating events which will trigger new conformity determinations in addition to those triggering events established in § 93.104; and

(ii) Consulting on emissions analysis for transportation activities which cross the borders of MPOs or nonattainment areas or air basins.

(3) Where the metropolitan planning area does not include the entire nonattainment or maintenance area, a process involving the MPO and the State department of transportation for cooperative planning and analysis for purposes of determining conformity of all projects outside the metropolitan area and within the nonattainment or maintenance area.

(4) A process to ensure that plans for construction of regionally significant projects which are not FHWA/FTA projects (including projects for which alternative locations, design concept and scope, or the no-build option are still being considered), including those by recipients of funds designated under title 23 U.S.C. or the Federal Transit Laws, are disclosed to the MPO on a regular basis, and to ensure that any changes to those plans are immediately disclosed.

(5) A process involving the MPO and other recipients of funds designated under title 23 U.S.C. or the Federal Transit Laws for assuming the location and design concept and scope of projects which are disclosed to the MPO as required by paragraph (c)(4) of this section but whose sponsors have not yet decided these features, in sufficient detail to perform the regional emissions analysis according to the requirements of § 93.122.

(6) A process for consulting on the design, schedule, and funding of research and data collection efforts and regional transportation model development by the MPO (e.g., household/ travel transportation surveys).

(7) A process for providing final documents (including applicable implementation plans and implementation plan revisions) and supporting information to each agency after approval or adoption. This process is applicable to all agencies described in paragraph (a)(1) of this section, including Federal agencies.

(d) *Resolving conflicts.* Conflicts among State agencies or between State agencies and an MPO shall be escalated to the Governor if they cannot be resolved by the heads of the involved agencies. The State air agency has 14 calendar days to appeal to the Governor after the State DOT or MPO has notified the State air agency head of the resolution of his or her comments. The implementation plan revision required by § 51.390 of this chapter shall define the procedures for starting the 14-day clock. If the State air agency appeals to the Governor, the final conformity determination must have the concurrence of the Governor. If the State air agency does not appeal to the Governor within 14 days, the MPO or State department of transportation may proceed with the final conformity determination. The Governor may delegate his or her role in this process, but not to the head or staff of the State or local air agency, State department of transportation, State transportation commission or board, or an MPO.

(e) *Public consultation procedures.* Affected agencies making conformity determinations on transportation plans, programs, and projects shall establish a proactive public involvement process which provides opportunity for public review and comment by, at a minimum, providing reasonable public access to technical and policy information considered by the agency at the beginning of the public comment period and prior to taking formal action on a conformity determination for all transportation plans and TIPs, consistent with these requirements and those of 23 CFR 450.316(a). Any charges imposed for public inspection and copying should be consistent with the fee schedule contained in 49 CFR 7.43. In addition, these agencies must specifically address in writing all public comments that known plans for a regionally significant project which is not receiving FHWA or FTA funding or approval have not been properly reflected in the emissions analysis supporting a proposed conformity finding for a transportation plan or TIP. These agencies shall also provide opportunity for public involvement in conformity determinations for projects where otherwise required by law.

[62 FR 43801, Aug. 15, 1997, as amended at 69 FR 40073, July 1, 2004; 70 FR 24291, May 6, 2005; 71 FR 12510, Mar. 10, 2006; 73 FR 4439, Jan. 24, 2008; 75 FR 14284, Mar. 24, 2010]

§ 93.106 Content of transportation plans and timeframe of conformity determinations.

(a) *Transportation plans adopted after January 1, 1997 in serious, severe, or extreme ozone nonattainment areas and in serious CO nonattainment areas.* If the metropolitan planning area contains an urbanized area population greater than 200,000, the transportation plan must specifically describe the transportation system envisioned for certain future years which shall be called horizon years.

(1) The agency or organization developing the transportation plan may choose any years to be horizon years, subject to the following restrictions:

(i) Horizon years may be no more than 10 years apart;

(ii) The first horizon year may be no more than 10 years from the base year used to validate the transportation demand planning model;

(iii) The attainment year must be a horizon year if it is in the timeframe of the transportation plan and conformity determination;

(iv) The last year of the transportation plan's forecast period must be a horizon year; and

(v) If the timeframe of the conformity determination has been shortened under paragraph (d) of this section, the last year of the timeframe of the conformity determination must be a horizon year.

(2) For these horizon years:

(i) The transportation plan shall quantify and document the demographic and employment factors influencing expected transportation demand, including land use forecasts, in accordance with implementation plan provisions and the consultation requirements specified by § 93.105;

(ii) The highway and transit system shall be described in terms of the regionally significant additions or modifications to the existing transportation network which the transportation plan envisions to be operational in the horizon years. Additions and modifications to the highway network shall be sufficiently identified to indicate intersections with existing regionally significant facilities, and to determine their effect on route options between transportation analysis zones. Each added or modified highway segment shall also be sufficiently identified in terms of its design concept and design scope to allow modeling of travel times under various traffic volumes, consistent with the modeling methods for areawide transportation analysis in use by the MPO. Transit facilities, equipment, and services envisioned for the future shall be identified in terms of design concept, design scope, and operating policies that are sufficient for modeling of their transit ridership. Additions and modifications to the transportation network shall be described sufficiently to show that there is a reasonable relationship between expected land use and the envisioned transportation system; and

(iii) Other future transportation policies, requirements, services, and activities, including intermodal activities, shall be described.

(b) *Two-year grace period for transportation plan requirements in certain ozone and CO areas.* The requirements of paragraph (a) of this section apply to such areas or portions of such areas that have previously not been required to meet these requirements for any existing NAAQS two years from the following:

(1) The effective date of EPA's reclassification of an ozone or CO nonattainment area that has an urbanized area population greater than 200,000 to serious or above;

(2) The official notice by the Census Bureau that determines the urbanized area population of a serious or above ozone or CO nonattainment area to be greater than 200,000; or,

(3) The effective date of EPA's action that classifies a newly designated ozone or CO nonattainment area that has an urbanized area population greater than 200,000 as serious or above.

(c) *Transportation plans for other areas.* Transportation plans for other areas must meet the requirements of paragraph (a) of this section at least to the extent it has been the previous practice of the MPO to prepare plans which meet those requirements. Otherwise, the transportation system envisioned for the future must be sufficiently described within the transportation plans so that a conformity determination can be made according to

the criteria and procedures of §§ 93.109 through 93.119.

(d) *Timeframe of conformity determination.* (1) Unless an election is made under paragraph (d)(2) or (d)(3) of this section, the timeframe of the conformity determination must be through the last year of the transportation plan's forecast period.

(2) For areas that do not have an adequate or approved CAA section 175A(b) maintenance plan, the MPO may elect to shorten the timeframe of the transportation plan and TIP conformity determination, after consultation with state and local air quality agencies, solicitation of public comments, and consideration of such comments.

(i) The shortened timeframe of the conformity determination must extend at least to the latest of the following years:

(A) The tenth year of the transportation plan;

(B) The latest year for which an adequate or approved motor vehicle emissions budget(s) is established in the submitted or applicable implementation plan; or

(C) The year after the completion date of a regionally significant project if the project is included in the TIP or the project requires approval before the subsequent conformity determination.

(ii) The conformity determination must be accompanied by a regional emissions analysis (for informational purposes only) for the last year of the transportation plan and for any year shown to exceed motor vehicle emissions budgets in a prior regional emissions analysis, if such a year extends beyond the timeframe of the conformity determination.

(3) For areas that have an adequate or approved CAA section 175A(b) maintenance plan, the MPO may elect to shorten the timeframe of the conformity determination to extend through the last year of such maintenance plan after consultation with state and local air quality agencies, solicitation of public comments, and consideration of such comments.

(4) Any election made by an MPO under paragraphs (d)(2) or (d)(3) of this section shall continue in effect until the MPO elects otherwise, after consultation with state and local air quality agencies, solicitation of public comments, and consideration of such comments.

(e) *Savings.* The requirements of this section supplement other requirements of applicable law or regulation governing the format or content of transportation plans.

[62 FR 43801, Aug. 15, 1997, as amended at 69 FR 40073, July 1, 2004; 73 FR 4439, Jan. 24, 2008]

§ 93.107 Relationship of transportation plan and TIP conformity with the NEPA process.

The degree of specificity required in the transportation plan and the specific travel network assumed for air quality modeling do not preclude the consideration of alternatives in the NEPA process or other project development studies. Should the NEPA process result in a project with design concept and scope significantly different from that in the transportation plan or TIP, the project must meet the criteria in §§ 93.109 through 93.119 for projects not from a TIP before NEPA process completion.

§ 93.108 Fiscal constraints for transportation plans and TIPs.

Transportation plans and TIPs must be fiscally constrained consistent with DOT's metropolitan planning regulations at 23 CFR part 450 in order to be found in conformity.

§ 93.109 Criteria and procedures for determining conformity of transportation plans, programs, and projects: General.

(a) In order for each transportation plan, program, and FHWA/FTA project to be found to conform, the MPO and DOT must demonstrate that the applicable criteria and procedures in this subpart are satisfied, and the MPO and DOT must comply with all applicable conformity requirements of implementation plans and of court orders for the area which pertain specifically to conformity. The criteria for making conformity determinations differ based on the action under review (transportation plans, TIPs, and FHWA/FTA projects), the relevant pollutant(s), and the status of the implementation plan.

(b) Table 1 in this paragraph indicates the criteria and procedures in §§ 93.110 through 93.119 which apply for transportation plans, TIPs, and FHWA/FTA projects. Paragraphs (c) through (k) of this section explain when the budget, interim emissions, and hot-spot tests are required for each pollutant and NAAQS. Paragraph (l) of this section addresses conformity requirements for areas with approved or adequate limited maintenance plans. Paragraph (m) of this section addresses nonattainment and maintenance areas which EPA has determined have insignificant motor vehicle emissions. Paragraph (n) of this section addresses isolated rural nonattainment and maintenance areas. Table 1 follows:

TABLE 1—CONFORMITY CRITERIA

All Actions at all times:	
§ 93.110	Latest planning assumptions
§ 93.111	Latest emissions model
§ 93.112	Consultation
Transportation Plan:	
§ 93.113(b)	TCMs
§ 93.118 or § 93.119	Emissions budget and/or Interim emissions
TIP:	
§ 93.113(c)	TCMs
§ 93.118 or § 93.119	Emissions budget and/or Interim emissions
Project (From a Conforming Plan and TIP):	
§ 93.114	Currently conforming plan and TIP
§ 93.115	Project from a conforming plan and TIP
§ 93.116	CO, PM_{10}, and $PM_{2.5}$ hot-spots.
§ 93.117	PM_{10} and $PM_{2.5}$ control measures
Project (Not From a Conforming Plan and TIP):	
§ 93.113(d)	TCMs
§ 93.114	Currently conforming plan and TIP
§ 93.116	CO, PM_{10}, and $PM_{2.5}$ hot-spots.
§ 93.117	PM_{10} and $PM_{2.5}$ control measures
§ 93.118 and/or § 93.119	Emissions budget and/or Interim emissions

(c) *1-hour ozone NAAQS nonattainment and maintenance areas.* This paragraph applies when an area is nonattainment or maintenance for the 1-hour ozone NAAQS (*i.e.*, until the effective date of any revocation of the 1-hour ozone NAAQS for an area). In addition to the criteria listed in Table 1 in paragraph (b) of this section that are required to be satisfied at all times, in such ozone nonattainment and maintenance areas conformity determinations must include a demonstration that the budget and/or interim emissions tests are satisfied as described in the following:

(1) In all 1-hour ozone nonattainment and maintenance areas the budget test must be satisfied as required by § 93.118 for conformity determinations made on or after:

(i) The effective date of EPA's finding that a motor vehicle emissions budget in a submitted control strategy implementation plan revision or maintenance plan for the 1-hour ozone NAAQS is adequate for transportation conformity purposes;

(ii) The publication date of EPA's approval of such a budget in the FEDERAL REGISTER; or

(iii) The effective date of EPA's approval of such a budget in the FEDERAL REGISTER, if such approval is completed through direct final rulemaking.

(2) In ozone nonattainment areas that are required to submit a control strategy implementation plan revision for the 1-hour ozone NAAQS (usually moderate and above areas), the interim emissions tests must be satisfied as required by § 93.119 for conformity determinations made when there is no approved motor vehicle emissions budget from an applicable implementation plan for the 1-hour ozone NAAQS and no adequate motor vehicle emissions budget from a submitted control strategy implementation plan revision or maintenance plan for the 1-hour ozone NAAQS.

(3) An ozone nonattainment area must satisfy the interim emissions test for NO_X, as required by § 93.119, if the implementation plan or plan submission that is applicable for the purposes of conformity determinations is a 15% plan or Phase I attainment demonstration that does not include a motor vehicle emissions budget for NO_X. The implementation plan for the 1-hour ozone NAAQS will be considered to establish a motor vehicle emissions budget for NO_X if the implementation plan or plan submission contains an explicit NO_X motor vehicle emissions budget that is intended to act as a ceiling on future NO_X emissions, and the NO_X motor vehicle emissions budget is a net reduction from NO_X emissions levels in 1990.

(4) Ozone nonattainment areas that have not submitted a maintenance plan

and that are not required to submit a control strategy implementation plan revision for the 1-hour ozone NAAQS (usually marginal and below areas) must satisfy one of the following requirements:

(i) The interim emissions tests required by § 93.119; or

(ii) The State shall submit to EPA an implementation plan revision for the 1-hour ozone NAAQS that contains motor vehicle emissions budget(s) and a reasonable further progress or attainment demonstration, and the budget test required by § 93.118 must be satisfied using the adequate or approved motor vehicle emissions budget(s) (as described in paragraph (c)(1) of this section).

(5) Notwithstanding paragraphs (c)(1) and (c)(2) of this section, moderate and above ozone nonattainment areas with three years of clean data for the 1-hour ozone NAAQS that have not submitted a maintenance plan and that EPA has determined are not subject to the Clean Air Act reasonable further progress and attainment demonstration requirements for the 1-hour ozone NAAQS must satisfy one of the following requirements:

(i) The interim emissions tests as required by § 93.119;

(ii) The budget test as required by § 93.118, using the adequate or approved motor vehicle emissions budgets in the submitted or applicable control strategy implementation plan for the 1-hour ozone NAAQS (subject to the timing requirements of paragraph (c)(1) of this section); or

(iii) The budget test as required by § 93.118, using the motor vehicle emissions of ozone precursors in the most recent year of clean data as motor vehicle emissions budgets, if such budgets are established by the EPA rulemaking that determines that the area has clean data for the 1-hour ozone NAAQS.

(d) *8-hour ozone NAAQS nonattainment and maintenance areas without motor vehicle emissions budgets for the 1-hour ozone NAAQS for any portion of the 8-hour nonattainment area.* This paragraph applies to areas that were never designated nonattainment for the 1-hour ozone NAAQS and areas that were designated nonattainment for the 1-hour ozone NAAQS but that never submitted a control strategy SIP or maintenance plan with approved or adequate motor vehicle emissions budgets. This paragraph applies 1 year after the effective date of EPA's nonattainment designation for the 8-hour ozone NAAQS for an area, according to § 93.102(d). In addition to the criteria listed in Table 1 in paragraph (b) of this section that are required to be satisfied at all times, in such 8-hour ozone nonattainment and maintenance areas conformity determinations must include a demonstration that the budget and/or interim emissions tests are satisfied as described in the following:

(1) In such 8-hour ozone nonattainment and maintenance areas the budget test must be satisfied as required by § 93.118 for conformity determinations made on or after:

(i) The effective date of EPA's finding that a motor vehicle emissions budget in a submitted control strategy implementation plan revision or maintenance plan for the 8-hour ozone NAAQS is adequate for transportation conformity purposes;

(ii) The publication date of EPA's approval of such a budget in the FEDERAL REGISTER; or

(iii) The effective date of EPA's approval of such a budget in the FEDERAL REGISTER, if such approval is completed through direct final rulemaking.

(2) In ozone nonattainment areas that are required to submit a control strategy implementation plan revision for the 8-hour ozone NAAQS (usually moderate and above and certain Clean Air Act, part D, subpart 1 areas), the interim emissions tests must be satisfied as required by § 93.119 for conformity determinations made when there is no approved motor vehicle emissions budget from an applicable implementation plan for the 8-hour ozone NAAQS and no adequate motor vehicle emissions budget from a submitted control strategy implementation plan revision or maintenance plan for the 8-hour ozone NAAQS.

(3) Such an 8-hour ozone nonattainment area must satisfy the interim emissions test for NO_X, as required by § 93.119, if the implementation plan or plan submission that is applicable for

the purposes of conformity determinations is a 15% plan or other control strategy SIP that addresses reasonable further progress that does not include a motor vehicle emissions budget for NO_X. The implementation plan for the 8-hour ozone NAAQS will be considered to establish a motor vehicle emissions budget for NO_X if the implementation plan or plan submission contains an explicit NO_X motor vehicle emissions budget that is intended to act as a ceiling on future NO_X emissions, and the NO_X motor vehicle emissions budget is a net reduction from NO_X emissions levels in 2002.

(4) Ozone nonattainment areas that have not submitted a maintenance plan and that are not required to submit a control strategy implementation plan revision for the 8-hour ozone NAAQS (usually marginal and certain Clean Air Act, part D, subpart 1 areas) must satisfy one of the following requirements:

(i) The interim emissions tests required by § 93.119; or

(ii) The State shall submit to EPA an implementation plan revision for the 8-hour ozone NAAQS that contains motor vehicle emissions budget(s) and a reasonable further progress or attainment demonstration, and the budget test required by § 93.118 must be satisfied using the adequate or approved motor vehicle emissions budget(s) (as described in paragraph (d)(1) of this section).

(5) Notwithstanding paragraphs (d)(1) and (d)(2) of this section, ozone nonattainment areas with three years of clean data for the 8-hour ozone NAAQS that have not submitted a maintenance plan and that EPA has determined are not subject to the Clean Air Act reasonable further progress and attainment demonstration requirements for the 8-hour ozone NAAQS must satisfy one of the following requirements:

(i) The interim emissions tests as required by § 93.119;

(ii) The budget test as required by § 93.118, using the adequate or approved motor vehicle emissions budgets in the submitted or applicable control strategy implementation plan for the 8-hour ozone NAAQS (subject to the timing requirements of paragraph (d)(1) of this section); or

(iii) The budget test as required by § 93.118, using the motor vehicle emissions of ozone precursors in the most recent year of clean data as motor vehicle emissions budgets, if such budgets are established by the EPA rulemaking that determines that the area has clean data for the 8-hour ozone NAAQS.

(e) *8-hour ozone NAAQS nonattainment and maintenance areas with motor vehicle emissions budgets for the 1-hour ozone NAAQS that cover all or a portion of the 8-hour nonattainment area.* This provision applies 1 year after the effective date of EPA's nonattainment designation for the 8-hour ozone NAAQS for an area, according to § 93.102(d). In addition to the criteria listed in Table 1 in paragraph (b) of this section that are required to be satisfied at all times, in such 8-hour ozone nonattainment and maintenance areas conformity determinations must include a demonstration that the budget and/or interim emissions tests are satisfied as described in the following:

(1) In such 8-hour ozone nonattainment and maintenance areas the budget test must be satisfied as required by § 93.118 for conformity determinations made on or after:

(i) The effective date of EPA's finding that a motor vehicle emissions budget in a submitted control strategy implementation plan revision or maintenance plan for the 8-hour ozone NAAQS is adequate for transportation conformity purposes;

(ii) The publication date of EPA's approval of such a budget in the FEDERAL REGISTER; or

(iii) The effective date of EPA's approval of such a budget in the FEDERAL REGISTER, if such approval is completed through direct final rulemaking.

(2) Prior to paragraph (e)(1) of this section applying, the following test(s) must be satisfied:

(i) If the 8-hour ozone nonattainment area covers the same geographic area as the 1-hour ozone nonattainment or maintenance area(s), the budget test as required by § 93.118 using the approved or adequate motor vehicle emissions budgets in the 1-hour ozone applicable implementation plan or implementation plan submission;

(ii) If the 8-hour ozone nonattainment area covers a smaller geographic area within the 1-hour ozone nonattainment or maintenance area(s), the budget test as required by § 93.118 for either:

(A) The 8-hour nonattainment area using corresponding portion(s) of the approved or adequate motor vehicle emissions budgets in the 1-hour ozone applicable implementation plan or implementation plan submission where such portion(s) can reasonably be identified through the interagency consultation process required by § 93.105; or

(B) The 1-hour nonattainment area using the approved or adequate motor vehicle emissions budgets in the 1-hour ozone applicable implementation plan or implementation plan submission. If additional emissions reductions are necessary to meet the budget test for the 8-hour ozone NAAQS in such cases, these emissions reductions must come from within the 8-hour nonattainment area;

(iii) If the 8-hour ozone nonattainment area covers a larger geographic area and encompasses the entire 1-hour ozone nonattainment or maintenance area(s):

(A) The budget test as required by § 93.118 for the portion of the 8-hour ozone nonattainment area covered by the approved or adequate motor vehicle emissions budgets in the 1-hour ozone applicable implementation plan or implementation plan submission; and

(B) The interim emissions tests as required by § 93.119 for either: the portion of the 8-hour ozone nonattainment area not covered by the approved or adequate budgets in the 1-hour ozone implementation plan, the entire 8-hour ozone nonattainment area, or the entire portion of the 8-hour ozone nonattainment area within an individual state, in the case where separate 1-hour SIP budgets are established for each state of a multi-state 1-hour nonattainment or maintenance area;

(iv) If the 8-hour ozone nonattainment area partially covers a 1-hour ozone nonattainment or maintenance area(s):

(A) The budget test as required by § 93.118 for the portion of the 8-hour ozone nonattainment area covered by the corresponding portion of the approved or adequate motor vehicle emissions budgets in the 1-hour ozone applicable implementation plan or implementation plan submission where they can be reasonably identified through the interagency consultation process required by § 93.105; and

(B) The interim emissions tests as required by § 93.119, when applicable, for either: the portion of the 8-hour ozone nonattainment area not covered by the approved or adequate budgets in the 1-hour ozone implementation plan, the entire 8-hour ozone nonattainment area, or the entire portion of the 8-hour ozone nonattainment area within an individual state, in the case where separate 1-hour SIP budgets are established for each state in a multi-state 1-hour nonattainment or maintenance area.

(3) Such an 8-hour ozone nonattainment area must satisfy the interim emissions test for NO_X, as required by § 93.119, if the only implementation plan or plan submission that is applicable for the purposes of conformity determinations is a 15% plan or other control strategy SIP that addresses reasonable further progress that does not include a motor vehicle emissions budget for NO_X. The implementation plan for the 8-hour ozone NAAQS will be considered to establish a motor vehicle emissions budget for NO_X if the implementation plan or plan submission contains an explicit NO_X motor vehicle emissions budget that is intended to act as a ceiling on future NO_X emissions, and the NO_X motor vehicle emissions budget is a net reduction from NO_X emissions levels in 2002. Prior to an adequate or approved NO_X motor vehicle emissions budget in the implementation plan submission for the 8-hour ozone NAAQS, the implementation plan for the 1-hour ozone NAAQS will be considered to establish a motor vehicle emissions budget for NO_X if the implementation plan contains an explicit NO_X motor vehicle emissions budget that is intended to act as a ceiling on future NO_X emissions, and the NO_X motor vehicle emissions budget is a net reduction from NO_X emissions levels in 1990.

(4) Notwithstanding paragraphs (e)(1) and (e)(2) of this section, ozone nonattainment areas with three years of clean data for the 8-hour ozone NAAQS that have not submitted a maintenance plan and that EPA has determined are not subject to the Clean Air Act reasonable further progress and attainment demonstration requirements for the 8-hour ozone NAAQS must satisfy one of the following requirements:

(i) The budget test and/or interim emissions tests as required by §§ 93.118 and 93.119 and as described in paragraph (e)(2) of this section;

(ii) The budget test as required by § 93.118, using the adequate or approved motor vehicle emissions budgets in the submitted or applicable control strategy implementation plan for the 8-hour ozone NAAQS (subject to the timing requirements of paragraph (e)(1) of this section); or

(iii) The budget test as required by § 93.118, using the motor vehicle emissions of ozone precursors in the most recent year of clean data as motor vehicle emissions budgets, if such budgets are established by the EPA rulemaking that determines that the area has clean data for the 8-hour ozone NAAQS.

(f) *CO nonattainment and maintenance areas*. In addition to the criteria listed in Table 1 in paragraph (b) of this section that are required to be satisfied at all times, in CO nonattainment and maintenance areas conformity determinations must include a demonstration that the hot-spot, budget and/or interim emissions tests are satisfied as described in the following:

(1) FHWA/FTA projects in CO nonattainment or maintenance areas must satisfy the hot spot test required by § 93.116(a) at all times. Until a CO attainment demonstration or maintenance plan is approved by EPA, FHWA/FTA projects must also satisfy the hot spot test required by § 93.116(b).

(2) In CO nonattainment and maintenance areas the budget test must be satisfied as required by § 93.118 for conformity determinations made on or after:

(i) The effective date of EPA's finding that a motor vehicle emissions budget in a submitted control strategy implementation plan revision or maintenance plan is adequate for transportation conformity purposes;

(ii) The publication date of EPA's approval of such a budget in the FEDERAL REGISTER; or

(iii) The effective date of EPA's approval of such a budget in the FEDERAL REGISTER, if such approval is completed through direct final rulemaking.

(3) Except as provided in paragraph (f)(4) of this section, in CO nonattainment areas the interim emissions tests must be satisfied as required by § 93.119 for conformity determinations made when there is no approved motor vehicle emissions budget from an applicable implementation plan and no adequate motor vehicle emissions budget from a submitted control strategy implementation plan revision or maintenance plan.

(4) CO nonattainment areas that have not submitted a maintenance plan and that are not required to submit an attainment demonstration (e.g., moderate CO areas with a design value of 12.7 ppm or less or not classified CO areas) must satisfy one of the following requirements:

(i) The interim emissions tests required by § 93.119; or

(ii) The State shall submit to EPA an implementation plan revision that contains motor vehicle emissions budget(s) and an attainment demonstration, and the budget test required by § 93.118 must be satisfied using the adequate or approved motor vehicle emissions budget(s) (as described in paragraph (f)(2) of this section).

(g) *PM_{10} nonattainment and maintenance areas*. In addition to the criteria listed in Table 1 in paragraph (b) of this section that are required to be satisfied at all times, in PM_{10} nonattainment and maintenance areas conformity determinations must include a demonstration that the hot-spot, budget and/or interim emissions tests are satisfied as described in the following:

(1) FHWA/FTA projects in PM_{10} nonattainment or maintenance areas must satisfy the hot spot test required by § 93.116(a).

(2) In PM_{10} nonattainment and maintenance areas where a budget is submitted for the 24-hour PM_{10} NAAQS,

the budget test must be satisfied as required by §93.118 for conformity determinations made on or after:

(i) The effective date of EPA's finding that a motor vehicle emissions budget in a submitted control strategy implementation plan revision or maintenance plan is adequate for transportation conformity purposes;

(ii) The publication date of EPA's approval of such a budget in the FEDERAL REGISTER; or

(iii) The effective date of EPA's approval of such a budget in the FEDERAL REGISTER, if such approval is completed through direct final rulemaking.

(3) Prior to paragraph (g)(2) of this section applying, the budget test must be satisfied as required by §93.118 using the approved or adequate motor vehicle emissions budget established for the revoked annual PM_{10} NAAQS, if such a budget exists.

(4) In PM_{10} nonattainment areas the interim emissions tests must be satisfied as required by §93.119 for conformity determinations made:

(i) If there is no approved motor vehicle emissions budget from an applicable implementation plan and no adequate motor vehicle emissions budget from a submitted control strategy implementation plan revision or maintenance plan; or

(ii) If the submitted implementation plan revision is a demonstration of impracticability under CAA section 189(a)(1)(B)(ii) and does not demonstrate attainment.

(h) *NO_2 nonattainment and maintenance areas.* In addition to the criteria listed in Table 1 in paragraph (b) of this section that are required to be satisfied at all times, in NO_2 nonattainment and maintenance areas conformity determinations must include a demonstration that the budget and/or interim emissions tests are satisfied as described in the following:

(1) In NO_2 nonattainment and maintenance areas the budget test must be satisfied as required by §93.118 for conformity determinations made on or after:

(i) The effective date of EPA's finding that a motor vehicle emissions budget in a submitted control strategy implementation plan revision or maintenance plan is adequate for transportation conformity purposes;

(ii) The publication date of EPA's approval of such a budget in the FEDERAL REGISTER; or

(iii) The effective date of EPA's approval of such a budget in the FEDERAL REGISTER, if such approval is completed through direct final rulemaking.

(2) In NO_2 nonattainment areas the interim emissions tests must be satisfied as required by §93.119 for conformity determinations made when there is no approved motor vehicle emissions budget from an applicable implementation plan and no adequate motor vehicle emissions budget from a submitted control strategy implementation plan revision or maintenance plan.

(i) *1997 $PM_{2.5}$ NAAQS nonattainment and maintenance areas.* In addition to the criteria listed in Table 1 in paragraph (b) of this section that are required to be satisfied at all times, in such 1997 $PM_{2.5}$ nonattainment and maintenance areas conformity determinations must include a demonstration that the budget and/or interim emissions tests are satisfied as described in the following:

(1) FHWA/FTA projects in such 1997 $PM_{2.5}$ nonattainment or maintenance areas must satisfy the appropriate hotspot test required by §93.116(a).

(2) In such 1997 $PM_{2.5}$ nonattainment and maintenance areas the budget test must be satisfied as required by §93.118 for conformity determinations made on or after:

(i) The effective date of EPA's finding that a motor vehicle emissions budget in a submitted control strategy implementation plan revision or maintenance plan is adequate for transportation conformity purposes;

(ii) The publication date of EPA's approval of such a budget in the FEDERAL REGISTER; or

(iii) The effective date of EPA's approval of such a budget in the FEDERAL REGISTER, if such approval is completed through direct final rulemaking.

(3) In such 1997 $PM_{2.5}$ nonattainment areas the interim emissions tests must be satisfied as required by §93.119 for conformity determinations made if there is no approved motor vehicle emissions budget from an applicable

implementation plan and no adequate motor vehicle emissions budget from a submitted control strategy implementation plan revision or maintenance plan.

(j) *2006 $PM_{2.5}$ NAAQS nonattainment and maintenance areas without 1997 $PM_{2.5}$ NAAQS motor vehicle emissions budgets for any portion of the 2006 $PM_{2.5}$ NAAQS area.* In addition to the criteria listed in Table 1 in paragraph (b) of this section that are required to be satisfied at all times, in such 2006 $PM_{2.5}$ nonattainment and maintenance areas conformity determinations must include a demonstration that the budget and/or interim emissions tests are satisfied as described in the following:

(1) FHWA/FTA projects in such $PM_{2.5}$ nonattainment and maintenance areas must satisfy the appropriate hot-spot test required by § 93.116(a).

(2) In such $PM_{2.5}$ nonattainment and maintenance areas the budget test must be satisfied as required by § 93.118 for conformity determinations made on or after:

(i) The effective date of EPA's finding that a motor vehicle emissions budget in a submitted control strategy implementation plan revision or maintenance plan for the 2006 $PM_{2.5}$ NAAQS is adequate for transportation conformity purposes;

(ii) The publication date of EPA's approval of such a budget in the FEDERAL REGISTER; or

(iii) The effective date of EPA's approval of such a budget in the FEDERAL REGISTER, if such approval is completed through direct final rulemaking.

(3) In such $PM_{2.5}$ nonattainment areas the interim emissions tests must be satisfied as required by § 93.119 for conformity determinations made if there is no approved motor vehicle emissions budget from an applicable implementation plan for the 2006 $PM_{2.5}$ NAAQS and no adequate motor vehicle emissions budget from a submitted control strategy implementation plan revision or maintenance plan for the 2006 $PM_{2.5}$ NAAQS.

(k) *2006 $PM_{2.5}$ NAAQS nonattainment and maintenance areas with motor vehicle emissions budgets for the 1997 $PM_{2.5}$ NAAQS that cover all or a portion of the 2006 $PM_{2.5}$ nonattainment area.* In addition to the criteria listed in Table 1 in paragraph (b) of this section that are required to be satisfied at all times, in such 2006 $PM_{2.5}$ nonattainment and maintenance areas conformity determinations must include a demonstration that the budget and/or interim emissions tests are satisfied as described in the following:

(1) FHWA/FTA projects in such $PM_{2.5}$ nonattainment and maintenance areas must satisfy the appropriate hot-spot test required by § 93.116(a).

(2) In such $PM_{2.5}$ nonattainment and maintenance areas the budget test must be satisfied as required by § 93.118 for conformity determinations made on or after:

(i) The effective date of EPA's finding that a motor vehicle emissions budget in a submitted control strategy implementation plan revision or maintenance plan for the 2006 $PM_{2.5}$ NAAQS is adequate for transportation conformity purposes;

(ii) The publication date of EPA's approval of such a budget in the FEDERAL REGISTER; or

(iii) The effective date of EPA's approval of such a budget in the FEDERAL REGISTER, if such approval is completed through direct final rulemaking.

(3) Prior to paragraph (k)(2) of this section applying, the following test(s) must be satisfied:

(i) If the 2006 $PM_{2.5}$ nonattainment area covers the same geographic area as the 1997 $PM_{2.5}$ nonattainment or maintenance area(s), the budget test as required by § 93.118 using the approved or adequate motor vehicle emissions budgets in the 1997 $PM_{2.5}$ applicable implementation plan or implementation plan submission;

(ii) If the 2006 $PM_{2.5}$ nonattainment area covers a smaller geographic area within the 1997 $PM_{2.5}$ nonattainment or maintenance area(s), the budget test as required by § 93.118 for either:

(A) The 2006 $PM_{2.5}$ nonattainment area using corresponding portion(s) of the approved or adequate motor vehicle emissions budgets in the 1997 $PM_{2.5}$ applicable implementation plan or implementation plan submission where such portion(s) can reasonably be identified through the interagency consultation process required by § 93.105; or

(B) The 1997 $PM_{2.5}$ nonattainment area using the approved or adequate

motor vehicle emissions budgets in the 1997 $PM_{2.5}$ applicable implementation plan or implementation plan submission. If additional emissions reductions are necessary to meet the budget test for the 2006 $PM_{2.5}$ NAAQS in such cases, these emissions reductions must come from within the 2006 $PM_{2.5}$ nonattainment area;

(iii) If the 2006 $PM_{2.5}$ nonattainment area covers a larger geographic area and encompasses the entire 1997 $PM_{2.5}$ nonattainment or maintenance area(s):

(A) The budget test as required by § 93.118 for the portion of the 2006 $PM_{2.5}$ nonattainment area covered by the approved or adequate motor vehicle emissions budgets in the 1997 $PM_{2.5}$ applicable implementation plan or implementation plan submission; and the interim emissions tests as required by § 93.119 for either: the portion of the 2006 $PM_{2.5}$ nonattainment area not covered by the approved or adequate budgets in the 1997 $PM_{2.5}$ implementation plan, the entire 2006 $PM_{2.5}$ nonattainment area, or the entire portion of the 2006 $PM_{2.5}$ nonattainment area within an individual state, in the case where separate 1997 $PM_{2.5}$ SIP budgets are established for each state of a multi-state 1997 $PM_{2.5}$ nonattainment or maintenance area; or

(B) The budget test as required by § 93.118 for the entire 2006 $PM_{2.5}$ nonattainment area using the approved or adequate motor vehicle emissions budgets in the applicable 1997 $PM_{2.5}$ implementation plan or implementation plan submission.

(iv) If the 2006 $PM_{2.5}$ nonattainment area partially covers a 1997 $PM_{2.5}$ nonattainment or maintenance area(s):

(A) The budget test as required by § 93.118 for the portion of the 2006 $PM_{2.5}$ nonattainment area covered by the corresponding portion of the approved or adequate motor vehicle emissions budgets in the 1997 $PM_{2.5}$ applicable implementation plan or implementation plan submission where they can be reasonably identified through the interagency consultation process required by § 93.105; and

(B) The interim emissions tests as required by § 93.119, when applicable, for either: The portion of the 2006 $PM_{2.5}$ nonattainment area not covered by the approved or adequate budgets in the 1997 $PM_{2.5}$ implementation plan, the entire 2006 $PM_{2.5}$ nonattainment area, or the entire portion of the 2006 $PM_{2.5}$ nonattainment area within an individual state, in the case where separate 1997 $PM_{2.5}$ SIP budgets are established for each state in a multi-state 1997 $PM_{2.5}$ nonattainment or maintenance area.

(l) *Areas with limited maintenance plans.* Notwithstanding the other paragraphs of this section, an area is not required to satisfy the regional emissions analysis for § 93.118 and/or § 93.119 for a given pollutant and NAAQS, if the area has an adequate or approved limited maintenance plan for such pollutant and NAAQS. A limited maintenance plan would have to demonstrate that it would be unreasonable to expect that such an area would experience enough motor vehicle emissions growth for a NAAQS violation to occur. A conformity determination that meets other applicable criteria in Table 1 of paragraph (b) of this section is still required, including the hot-spot requirements for projects in CO, PM_{10}, and $PM_{2.5}$ areas.

(m) *Areas with insignificant motor vehicle emissions.* Notwithstanding the other paragraphs in this section, an area is not required to satisfy a regional emissions analysis for § 93.118 and/or § 93.119 for a given pollutant/precursor and NAAQS, if EPA finds through the adequacy or approval process that a SIP demonstrates that regional motor vehicle emissions are an insignificant contributor to the air quality problem for that pollutant/precursor and NAAQS. The SIP would have to demonstrate that it would be unreasonable to expect that such an area would experience enough motor vehicle emissions growth in that pollutant/precursor for a NAAQS violation to occur. Such a finding would be based on a number of factors, including the percentage of motor vehicle emissions in the context of the total SIP inventory, the current state of air quality as determined by monitoring data for that NAAQS, the absence of SIP motor vehicle control measures, and historical trends and future projections of the growth of motor vehicle emissions. A conformity determination that meets other applicable criteria in Table 1 of paragraph (b) of this section

is still required, including regional emissions analyses for § 93.118 and/or § 93.119 for other pollutants/precursors and NAAQS that apply. Hot-spot requirements for projects in CO, PM_{10}, and $PM_{2.5}$ areas in § 93.116 must also be satisfied, unless EPA determines that the SIP also demonstrates that projects will not create new localized violations and/or increase the severity or number of existing violations of such NAAQS. If EPA subsequently finds that motor vehicle emissions of a given pollutant/precursor are significant, this paragraph would no longer apply for future conformity determinations for that pollutant/precursor and NAAQS.

(n) *Isolated rural nonattainment and maintenance areas.* This paragraph applies to any nonattainment or maintenance area (or portion thereof) which does not have a metropolitan transportation plan or TIP and whose projects are not part of the emissions analysis of any MPO's metropolitan transportation plan or TIP. This paragraph does not apply to ''donut'' areas which are outside the metropolitan planning boundary and inside the nonattainment/maintenance area boundary.

(1) FHWA/FTA projects in all isolated rural nonattainment and maintenance areas must satisfy the requirements of §§ 93.110, 93.111, 93.112, 93.113(d), 93.116, and 93.117. Until EPA approves the control strategy implementation plan or maintenance plan for a rural CO nonattainment or maintenance area, FHWA/FTA projects must also satisfy the requirements of § 93.116(b) (''Localized CO, PM_{10}, and $PM_{2.5}$ violations (hot spots)'').

(2) Isolated rural nonattainment and maintenance areas are subject to the budget and/or interim emissions tests as described in paragraphs (c) through (m) of this section, with the following modifications:

(i) When the requirements of §§ 93.106(d), 93.116, 93.118, and 93.119 apply to isolated rural nonattainment and maintenance areas, references to ''transportation plan'' or ''TIP'' should be taken to mean those projects in the statewide transportation plan or statewide TIP which are in the rural nonattainment or maintenance area. When the requirements of § 93.106(d) apply to isolated rural nonattainment and maintenance areas, references to ''MPO'' should be taken to mean the state department of transportation.

(ii) In isolated rural nonattainment and maintenance areas that are subject to § 93.118, FHWA/FTA projects must be consistent with motor vehicle emissions budget(s) for the years in the timeframe of the attainment demonstration or maintenance plan. For years after the attainment year (if a maintenance plan has not been submitted) or after the last year of the maintenance plan, FHWA/FTA projects must satisfy one of the following requirements:

(A) § 93.118;

(B) § 93.119 (including regional emissions analysis for NO_X in all ozone nonattainment and maintenance areas, notwithstanding § 93.119(f)(2)); or

(C) As demonstrated by the air quality dispersion model or other air quality modeling technique used in the attainment demonstration or maintenance plan, the FHWA/FTA project, in combination with all other regionally significant projects expected in the area in the timeframe of the statewide transportation plan, must not cause or contribute to any new violation of any standard in any areas; increase the frequency or severity of any existing violation of any standard in any area; or delay timely attainment of any standard or any required interim emission reductions or other milestones in any area. Control measures assumed in the analysis must be enforceable.

(iii) The choice of requirements in paragraph (n)(2)(ii) of this section and the methodology used to meet the requirements of paragraph (n)(2)(ii)(C) of this section must be determined through the interagency consultation process required in § 93.105(c)(1)(vii) through which the relevant recipients of title 23 U.S.C. or Federal Transit Laws funds, the local air quality agency, the State air quality agency, and the State department of transportation should reach consensus about the option and methodology selected. EPA and DOT must be consulted through this process as well. In the event of unresolved disputes, conflicts may be escalated to the Governor consistent with the procedure in § 93.105(d), which

applies for any State air agency comments on a conformity determination.

[62 FR 43801, Aug. 15, 1997, as amended at 69 FR 40093, July 1, 2004; 71 FR 12510, Mar. 10, 2006; 73 FR 4440, Jan. 24, 2008; 75 FR 14284, Mar. 24, 2010]

§ 93.110 Criteria and procedures: Latest planning assumptions.

(a) Except as provided in this paragraph, the conformity determination, with respect to all other applicable criteria in §§ 93.111 through 93.119, must be based upon the most recent planning assumptions in force at the time the conformity analysis begins. The conformity determination must satisfy the requirements of paragraphs (b) through (f) of this section using the planning assumptions available at the time the conformity analysis begins as determined through the interagency consultation process required in § 93.105(c)(1)(i). The ''time the conformity analysis begins'' for a transportation plan or TIP determination is the point at which the MPO or other designated agency begins to model the impact of the proposed transportation plan or TIP on travel and/or emissions. New data that becomes available after an analysis begins is required to be used in the conformity determination only if a significant delay in the analysis has occurred, as determined through interagency consultation.

(b) Assumptions must be derived from the estimates of current and future population, employment, travel, and congestion most recently developed by the MPO or other agency authorized to make such estimates and approved by the MPO. The conformity determination must also be based on the latest assumptions about current and future background concentrations.

(c) The conformity determination for each transportation plan and TIP must discuss how transit operating policies (including fares and service levels) and assumed transit ridership have changed since the previous conformity determination.

(d) The conformity determination must include reasonable assumptions about transit service and increases in transit fares and road and bridge tolls over time.

(e) The conformity determination must use the latest existing information regarding the effectiveness of the TCMs and other implementation plan measures which have already been implemented.

(f) Key assumptions shall be specified and included in the draft documents and supporting materials used for the interagency and public consultation required by § 93.105.

[62 FR 43801, Aug. 15, 1997, as amended at 69 FR 40077, July 1, 2004]

§ 93.111 Criteria and procedures: Latest emissions model.

(a) The conformity determination must be based on the latest emission estimation model available. This criterion is satisfied if the most current version of the motor vehicle emissions model specified by EPA for use in the preparation or revision of implementation plans in that State or area is used for the conformity analysis. Where EMFAC is the motor vehicle emissions model used in preparing or revising the applicable implementation plan, new versions must be approved by EPA before they are used in the conformity analysis.

(b) EPA will consult with DOT to establish a grace period following the specification of any new model.

(1) The grace period will be no less than three months and no more than 24 months after notice of availability is published in the FEDERAL REGISTER.

(2) The length of the grace period will depend on the degree of change in the model and the scope of re-planning likely to be necessary by MPOs in order to assure conformity. If the grace period will be longer than three months, EPA will announce the appropriate grace period in the FEDERAL REGISTER.

(c) Transportation plan and TIP conformity analyses for which the emissions analysis was begun during the grace period or before the FEDERAL REGISTER notice of availability of the latest emission model may continue to use the previous version of the model. Conformity determinations for projects may also be based on the previous model if the analysis was begun during the grace period or before the FEDERAL REGISTER notice of availability, and if

the final environmental document for the project is issued no more than three years after the issuance of the draft environmental document.

§ 93.112 Criteria and procedures: Consultation.

Conformity must be determined according to the consultation procedures in this subpart and in the applicable implementation plan, and according to the public involvement procedures established in compliance with 23 CFR part 450. Until the implementation plan revision required by § 51.390 of this chapter is fully approved by EPA, the conformity determination must be made according to § 93.105 (a)(2) and (e) and the requirements of 23 CFR part 450.

§ 93.113 Criteria and procedures: Timely implementation of TCMs.

(a) The transportation plan, TIP, or any FHWA/FTA project which is not from a conforming plan and TIP must provide for the timely implementation of TCMs from the applicable implementation plan.

(b) For transportation plans, this criterion is satisfied if the following two conditions are met:

(1) The transportation plan, in describing the envisioned future transportation system, provides for the timely completion or implementation of all TCMs in the applicable implementation plan which are eligible for funding under title 23 U.S.C. or the Federal Transit Laws, consistent with schedules included in the applicable implementation plan.

(2) Nothing in the transportation plan interferes with the implementation of any TCM in the applicable implementation plan.

(c) For TIPs, this criterion is satisfied if the following conditions are met:

(1) An examination of the specific steps and funding source(s) needed to fully implement each TCM indicates that TCMs which are eligible for funding under title 23 U.S.C. or the Federal Transit Laws are on or ahead of the schedule established in the applicable implementation plan, or, if such TCMs are behind the schedule established in the applicable implementation plan, the MPO and DOT have determined that past obstacles to implementation of the TCMs have been identified and have been or are being overcome, and that all State and local agencies with influence over approvals or funding for TCMs are giving maximum priority to approval or funding of TCMs over other projects within their control, including projects in locations outside the nonattainment or maintenance area.

(2) If TCMs in the applicable implementation plan have previously been programmed for Federal funding but the funds have not been obligated and the TCMs are behind the schedule in the implementation plan, then the TIP cannot be found to conform if the funds intended for those TCMs are reallocated to projects in the TIP other than TCMs, or if there are no other TCMs in the TIP, if the funds are reallocated to projects in the TIP other than projects which are eligible for Federal funding intended for air quality improvement projects, e.g., the Congestion Mitigation and Air Quality Improvement Program.

(3) Nothing in the TIP may interfere with the implementation of any TCM in the applicable implementation plan.

(d) For FHWA/FTA projects which are not from a conforming transportation plan and TIP, this criterion is satisfied if the project does not interfere with the implementation of any TCM in the applicable implementation plan.

§ 93.114 Criteria and procedures: Currently conforming transportation plan and TIP.

There must be a currently conforming transportation plan and currently conforming TIP at the time of project approval, or a project must meet the requirements in § 93.104(f) during the 12-month lapse grace period.

(a) Only one conforming transportation plan or TIP may exist in an area at any time; conformity determinations of a previous transportation plan or TIP expire once the current plan or TIP is found to conform by DOT. The conformity determination on a transportation plan or TIP will also lapse if conformity is not determined according to the frequency requirements specified in § 93.104.

(b) This criterion is not required to be satisfied at the time of project approval for a TCM specifically included in the applicable implementation plan, provided that all other relevant criteria of this subpart are satisfied.

[62 FR 43801, Aug. 15, 1997, as amended at 73 FR 4440, Jan. 24, 2008]

§93.115 Criteria and procedures: Projects from a transportation plan and TIP.

(a) The project must come from a conforming plan and program. If this criterion is not satisfied, the project must satisfy all criteria in Table 1 of §93.109(b) for a project not from a conforming transportation plan and TIP. A project is considered to be from a conforming transportation plan if it meets the requirements of paragraph (b) of this section and from a conforming program if it meets the requirements of paragraph (c) of this section. Special provisions for TCMs in an applicable implementation plan are provided in paragraph (d) of this section.

(b) A project is considered to be from a conforming transportation plan if one of the following conditions applies:

(1) For projects which are required to be identified in the transportation plan in order to satisfy §93.106 (''Content of transportation plans''), the project is specifically included in the conforming transportation plan and the project's design concept and scope have not changed significantly from those which were described in the transportation plan, or in a manner which would significantly impact use of the facility; or

(2) For projects which are not required to be specifically identified in the transportation plan, the project is identified in the conforming transportation plan, or is consistent with the policies and purpose of the transportation plan and will not interfere with other projects specifically included in the transportation plan.

(c) A project is considered to be from a conforming program if the following conditions are met:

(1) The project is included in the conforming TIP and the design concept and scope of the project were adequate at the time of the TIP conformity determination to determine its contribution to the TIP's regional emissions, and the project design concept and scope have not changed significantly from those which were described in the TIP; and

(2) If the TIP describes a project design concept and scope which includes project-level emissions mitigation or control measures, written commitments to implement such measures must be obtained from the project sponsor and/or operator as required by §93.125(a) in order for the project to be considered from a conforming program. Any change in these mitigation or control measures that would significantly reduce their effectiveness constitutes a change in the design concept and scope of the project.

(d) *TCMs*. This criterion is not required to be satisfied for TCMs specifically included in an applicable implementation plan.

(e) Notwithstanding the requirements of paragraphs (a), (b), and (c) of this section, a project must meet the requirements of §93.104(f) during the 12-month lapse grace period.

[62 FR 43801, Aug. 15, 1997, as amended at 73 FR 4440, Jan. 24, 2008]

§93.116 Criteria and procedures: Localized CO, PM_{10}, and $PM_{2.5}$ violations (hot-spots).

(a) This paragraph applies at all times. The FHWA/FTA project must not cause or contribute to any new localized CO, PM_{10}, and/or $PM_{2.5}$ violations, increase the frequency or severity of any existing CO, PM_{10}, and/or $PM_{2.5}$ violations, or delay timely attainment of any NAAQS or any required interim emission reductions or other milestones in CO, PM_{10}, and $PM_{2.5}$ nonattainment and maintenance areas. This criterion is satisfied without a hot-spot analysis in PM_{10} and $PM_{2.5}$ nonattainment and maintenance areas for FHWA/FTA projects that are not identified in §93.123(b)(1). This criterion is satisfied for all other FHWA/FTA projects in CO, PM_{10} and $PM_{2.5}$ nonattainment and maintenance areas if it is demonstrated that during the time frame of the transportation plan no new local violations will be created and the severity or number of existing violations will not be increased as a result of the project, and the project has

been included in a regional emissions analysis that meets applicable §§ 93.118 and/or 93.119 requirements. The demonstration must be performed according to the consultation requirements of § 93.105(c)(1)(i) and the methodology requirements of § 93.123.

(b) This paragraph applies for CO nonattainment areas as described in § 93.109(f)(1). Each FHWA/FTA project must eliminate or reduce the severity and number of localized CO violations in the area substantially affected by the project (in CO nonattainment areas). This criterion is satisfied with respect to existing localized CO violations if it is demonstrated that during the time frame of the transportation plan (or regional emissions analysis) existing localized CO violations will be eliminated or reduced in severity and number as a result of the project. The demonstration must be performed according to the consultation requirements of § 93.105(c)(1)(i) and the methodology requirements of § 93.123.

[69 FR 40077, July 1, 2004, as amended at 71 FR 12510, Mar. 10, 2006; 73 FR 4440, Jan. 24, 2008; 75 FR 14285, Mar. 24, 2010]

§ 93.117 Criteria and procedures: Compliance with PM_{10} and $PM_{2.5}$ control measures.

The FHWA/FTA project must comply with any PM_{10} and $PM_{2.5}$ control measures in the applicable implementation plan. This criterion is satisfied if the project-level conformity determination contains a written commitment from the project sponsor to include in the final plans, specifications, and estimates for the project those control measures (for the purpose of limiting PM_{10} and $PM_{2.5}$ emissions from the construction activities and/or normal use and operation associated with the project) that are contained in the applicable implementation plan.

[69 FR 40078, July 1, 2004]

§ 93.118 Criteria and procedures: Motor vehicle emissions budget.

(a) The transportation plan, TIP, and project not from a conforming transportation plan and TIP must be consistent with the motor vehicle emissions budget(s) in the applicable implementation plan (or implementation plan submission). This criterion applies as described in § 93.109(c) through (n). This criterion is satisfied if it is demonstrated that emissions of the pollutants or pollutant precursors described in paragraph (c) of this section are less than or equal to the motor vehicle emissions budget(s) established in the applicable implementation plan or implementation plan submission.

(b) Consistency with the motor vehicle emissions budget(s) must be demonstrated for each year for which the applicable (and/or submitted) implementation plan specifically establishes motor vehicle emissions budget(s), for the attainment year (if it is within the timeframe of the transportation plan and conformity determination), for the last year of the timeframe of the conformity determination (as described under § 93.106(d)), and for any intermediate years within the timeframe of the conformity determination as necessary so that the years for which consistency is demonstrated are no more than ten years apart, as follows:

(1) Until a maintenance plan is submitted:

(i) Emissions in each year (such as milestone years and the attainment year) for which the control strategy implementation plan revision establishes motor vehicle emissions budget(s) must be less than or equal to that year's motor vehicle emissions budget(s); and

(ii) Emissions in years for which no motor vehicle emissions budget(s) are specifically established must be less than or equal to the motor vehicle emissions budget(s) established for the most recent prior year. For example, emissions in years after the attainment year for which the implementation plan does not establish a budget must be less than or equal to the motor vehicle emissions budget(s) for the attainment year.

(2) When a maintenance plan has been submitted:

(i) Emissions must be less than or equal to the motor vehicle emissions budget(s) established for the last year of the maintenance plan, and for any other years for which the maintenance plan establishes motor vehicle emissions budgets. If the maintenance plan does not establish motor vehicle emissions budgets for any years other than

the last year of the maintenance plan, the demonstration of consistency with the motor vehicle emissions budget(s) must be accompanied by a qualitative finding that there are no factors which would cause or contribute to a new violation or exacerbate an existing violation in the years before the last year of the maintenance plan. The interagency consultation process required by §93.105 shall determine what must be considered in order to make such a finding;

(ii) For years after the last year of the maintenance plan, emissions must be less than or equal to the maintenance plan's motor vehicle emissions budget(s) for the last year of the maintenance plan;

(iii) If an approved and/or submitted control strategy implementation plan has established motor vehicle emissions budgets for years in the time frame of the transportation plan, emissions in these years must be less than or equal to the control strategy implementation plan's motor vehicle emissions budget(s) for these years; and

(iv) For any analysis years before the last year of the maintenance plan, emissions must be less than or equal to the motor vehicle emissions budget(s) established for the most recent prior year.

(c) Consistency with the motor vehicle emissions budget(s) must be demonstrated for each pollutant or pollutant precursor in §93.102(b) for which the area is in nonattainment or maintenance and for which the applicable implementation plan (or implementation plan submission) establishes a motor vehicle emissions budget.

(d) Consistency with the motor vehicle emissions budget(s) must be demonstrated by including emissions from the entire transportation system, including all regionally significant projects contained in the transportation plan and all other regionally significant highway and transit projects expected in the nonattainment or maintenance area in the timeframe of the transportation plan.

(1) Consistency with the motor vehicle emissions budget(s) must be demonstrated with a regional emissions analysis that meets the requirements of §§93.122 and 93.105(c)(1)(i).

(2) The regional emissions analysis may be performed for any years in the timeframe of the conformity determination (as described under §93.106(d)) provided they are not more than ten years apart and provided the analysis is performed for the attainment year (if it is in the timeframe of the transportation plan and conformity determination) and the last year of the timeframe of the conformity determination. Emissions in years for which consistency with motor vehicle emissions budgets must be demonstrated, as required in paragraph (b) of this section, may be determined by interpolating between the years for which the regional emissions analysis is performed.

(3) When the timeframe of the conformity determination is shortened under §93.106(d)(2), the conformity determination must be accompanied by a regional emissions analysis (for informational purposes only) for the last year of the transportation plan, and for any year shown to exceed motor vehicle emissions budgets in a prior regional emissions analysis (if such a year extends beyond the timeframe of the conformity determination).

(e) *Motor vehicle emissions budgets in submitted control strategy implementation plan revisions and submitted maintenance plans.* (1) Consistency with the motor vehicle emissions budgets in submitted control strategy implementation plan revisions or maintenance plans must be demonstrated if EPA has declared the motor vehicle emissions budget(s) adequate for transportation conformity purposes, and the adequacy finding is effective. However, motor vehicle emissions budgets in submitted implementation plans do not supersede the motor vehicle emissions budgets in approved implementation plans for the same Clean Air Act requirement and the period of years addressed by the previously approved implementation plan, unless EPA specifies otherwise in its approval of a SIP.

(2) The emissions predicted in the ''Action'' scenario are not greater than:

(i) 2002 emissions, in areas designated nonattainment for the 1997 $PM_{2.5}$ NAAQS; or

(ii) Emissions in the most recent year for which EPA's Air Emissions Reporting Requirements (40 CFR part 51, subpart A) requires submission of on-road mobile source emissions inventories, as of the effective date of nonattainment designations for any $PM_{2.5}$ NAAQS other than the 1997 $PM_{2.5}$ NAAQS.

(3) If EPA declares an implementation plan submission's motor vehicle emissions budget(s) inadequate for transportation conformity purposes after EPA had previously found the budget(s) adequate, and conformity of a transportation plan or TIP has already been determined by DOT using the budget(s), the conformity determination will remain valid. Projects included in that transportation plan or TIP could still satisfy §§ 93.114 and 93.115, which require a currently conforming transportation plan and TIP to be in place at the time of a project's conformity determination and that projects come from a conforming transportation plan and TIP.

(4) EPA will not find a motor vehicle emissions budget in a submitted control strategy implementation plan revision or maintenance plan to be adequate for transportation conformity purposes unless the following minimum criteria are satisfied:

(i) The submitted control strategy implementation plan revision or maintenance plan was endorsed by the Governor (or his or her designee) and was subject to a State public hearing;

(ii) Before the control strategy implementation plan or maintenance plan was submitted to EPA, consultation among federal, State, and local agencies occurred; full implementation plan documentation was provided to EPA; and EPA's stated concerns, if any, were addressed;

(iii) The motor vehicle emissions budget(s) is clearly identified and precisely quantified;

(iv) The motor vehicle emissions budget(s), when considered together with all other emissions sources, is consistent with applicable requirements for reasonable further progress, attainment, or maintenance (whichever is relevant to the given implementation plan submission);

(v) The motor vehicle emissions budget(s) is consistent with and clearly related to the emissions inventory and the control measures in the submitted control strategy implementation plan revision or maintenance plan; and

(vi) Revisions to previously submitted control strategy implementation plans or maintenance plans explain and document any changes to previously submitted budgets and control measures; impacts on point and area source emissions; any changes to established safety margins (see § 93.101 for definition); and reasons for the changes (including the basis for any changes related to emission factors or estimates of vehicle miles traveled).

(5) Before determining the adequacy of a submitted motor vehicle emissions budget, EPA will review the State's compilation of public comments and response to comments that are required to be submitted with any implementation plan. EPA will document its consideration of such comments and responses in a letter to the State indicating the adequacy of the submitted motor vehicle emissions budget.

(6) When the motor vehicle emissions budget(s) used to satisfy the requirements of this section are established by an implementation plan submittal that has not yet been approved or disapproved by EPA, the MPO and DOT's conformity determinations will be deemed to be a statement that the MPO and DOT are not aware of any information that would indicate that emissions consistent with the motor vehicle emissions budget will cause or contribute to any new violation of any standard; increase the frequency or severity of any existing violation of any standard; or delay timely attainment of any standard or any required interim emission reductions or other milestones.

(f) *Adequacy review process for implementation plan submissions.* EPA will use the procedure listed in paragraph (f)(1) or (f)(2) of this section to review the adequacy of an implementation plan submission:

(1) When EPA reviews the adequacy of an implementation plan submission prior to EPA's final action on the implementation plan,

(i) EPA will notify the public through EPA's website when EPA receives an implementation plan submission that will be reviewed for adequacy.

(ii) The public will have a minimum of 30 days to comment on the adequacy of the implementation plan submission. If the complete implementation plan is not accessible electronically through the internet and a copy is requested within 15 days of the date of the website notice, the comment period will be extended for 30 days from the date that a copy of the implementation plan is mailed.

(iii) After the public comment period closes, EPA will inform the State in writing whether EPA has found the submission adequate or inadequate for use in transportation conformity, including response to any comments submitted directly and review of comments submitted through the State process, or EPA will include the determination of adequacy or inadequacy in a proposed or final action approving or disapproving the implementation plan under paragraph (f)(2)(iii) of this section.

(iv) EPA will publish a FEDERAL REGISTER notice to inform the public of EPA's finding. If EPA finds the submission adequate, the effective date of this finding will be 15 days from the date the notice is published as established in the FEDERAL REGISTER notice, unless EPA is taking a final approval action on the SIP as described in paragraph (f)(2)(iii) of this section.

(v) EPA will announce whether the implementation plan submission is adequate or inadequate for use in transportation conformity on EPA's website. The website will also include EPA's response to comments if any comments were received during the public comment period.

(vi) If after EPA has found a submission adequate, EPA has cause to reconsider this finding, EPA will repeat actions described in paragraphs (f)(1)(i) through (v) or (f)(2) of this section unless EPA determines that there is no need for additional public comment given the deficiencies of the implementation plan submission. In all cases where EPA reverses its previous finding to a finding of inadequacy under paragraph (f)(1) of this section, such a finding will become effective immediately upon the date of EPA's letter to the State.

(vii) If after EPA has found a submission inadequate, EPA has cause to reconsider the adequacy of that budget, EPA will repeat actions described in paragraphs (f)(1)(i) through (v) or (f)(2) of this section.

(2) When EPA reviews the adequacy of an implementation plan submission simultaneously with EPA's approval or disapproval of the implementation plan,

(i) EPA's FEDERAL REGISTER notice of proposed or direct final rulemaking will serve to notify the public that EPA will be reviewing the implementation plan submission for adequacy.

(ii) The publication of the notice of proposed rulemaking will start a public comment period of at least 30 days.

(iii) EPA will indicate whether the implementation plan submission is adequate and thus can be used for conformity either in EPA's final rulemaking or through the process described in paragraphs (f)(1)(iii) through (v) of this section. If EPA makes an adequacy finding through a final rulemaking that approves the implementation plan submission, such a finding will become effective upon the publication date of EPA's approval in the FEDERAL REGISTER, or upon the effective date of EPA's approval if such action is conducted through direct final rulemaking. EPA will respond to comments received directly and review comments submitted through the State process and include the response to comments in the applicable docket.

[62 FR 43801, Aug. 15, 1997, as amended at 69 FR 40078, July 1, 2004; 73 FR 4440, Jan. 24, 2008; 75 FR 14285, Mar. 24, 2010]

§93.119 Criteria and procedures: Interim emissions in areas without motor vehicle emissions budgets.

(a) The transportation plan, TIP, and project not from a conforming transportation plan and TIP must satisfy the interim emissions test(s) as described in §93.109(c) through (n). This criterion applies to the net effect of the action (transportation plan, TIP, or project not from a conforming plan

and TIP) on motor vehicle emissions from the entire transportation system.

(b) *Ozone areas.* The requirements of this paragraph apply to all 1-hour ozone and 8-hour ozone NAAQS areas, except for certain requirements as indicated. This criterion may be met:

(1) In moderate and above ozone nonattainment areas that are subject to the reasonable further progress requirements of CAA section 182(b)(1) if a regional emissions analysis that satisfies the requirements of § 93.122 and paragraphs (g) through (j) of this section demonstrates that for each analysis year and for each of the pollutants described in paragraph (f) of this section:

(i) The emissions predicted in the ''Action'' scenario are less than the emissions predicted in the ''Baseline'' scenario, and this can be reasonably expected to be true in the periods between the analysis years; and

(ii) The emissions predicted in the ''Action'' scenario are lower than:

(A) 1990 emissions by any nonzero amount, in areas for the 1-hour ozone NAAQS as described in § 93.109(c); or

(B) 2002 emissions by any nonzero amount, in areas for the 8-hour ozone NAAQS as described in § 93.109(d) and (e).

(2) In marginal and below ozone nonattainment areas and other ozone nonattainment areas that are not subject to the reasonable further progress requirements of CAA section 182(b)(1) if a regional emissions analysis that satisfies the requirements of § 93.122 and paragraphs (g) through (j) of this section demonstrates that for each analysis year and for each of the pollutants described in paragraph (f) of this section:

(i) The emissions predicted in the ''Action'' scenario are not greater than the emissions predicted in the ''Baseline'' scenario, and this can be reasonably expected to be true in the periods between the analysis years; or

(ii) The emissions predicted in the ''Action'' scenario are not greater than:

(A) 1990 emissions, in areas for the 1-hour ozone NAAQS as described in § 93.109(c); or

(B) 2002 emissions, in areas for the 8-hour ozone NAAQS as described in § 93.109(d) and (e).

(c) *CO areas.* This criterion may be met:

(1) In moderate areas with design value greater than 12.7 ppm and serious CO nonattainment areas that are subject to CAA section 187(a)(7) if a regional emissions analysis that satisfies the requirements of § 93.122 and paragraphs (g) through (j) of this section demonstrates that for each analysis year and for each of the pollutants described in paragraph (f) of this section:

(i) The emissions predicted in the ''Action'' scenario are less than the emissions predicted in the ''Baseline'' scenario, and this can be reasonably expected to be true in the periods between the analysis years; and

(ii) The emissions predicted in the ''Action'' scenario are lower than 1990 emissions by any nonzero amount.

(2) In moderate areas with design value less than 12.7 ppm and not classified CO nonattainment areas if a regional emissions analysis that satisfies the requirements of § 93.122 and paragraphs (g) through (j) of this section demonstrates that for each analysis year and for each of the pollutants described in paragraph (f) of this section:

(i) The emissions predicted in the ''Action'' scenario are not greater than the emissions predicted in the ''Baseline'' scenario, and this can be reasonably expected to be true in the periods between the analysis years; or

(ii) The emissions predicted in the ''Action'' scenario are not greater than 1990 emissions.

(d) *PM_{10} and NO_2 areas.* This criterion may be met in PM_{10} and NO_2 nonattainment areas if a regional emissions analysis that satisfies the requirements of § 93.122 and paragraphs (g) through (j) of this section demonstrates that for each analysis year and for each of the pollutants described in paragraph (f) of this section, one of the following requirements is met:

(1) The emissions predicted in the ''Action'' scenario are not greater than the emissions predicted in the ''Baseline'' scenario, and this can be reasonably expected to be true in the periods between the analysis years; or

(2) The emissions predicted in the ''Action'' scenario are not greater than baseline emissions. Baseline emissions are those estimated to have occurred during calendar year 1990, unless the conformity implementation plan revision required by §51.390 of this chapter defines the baseline emissions for a PM_{10} area to be those occurring in a different calendar year for which a baseline emissions inventory was developed for the purpose of developing a control strategy implementation plan.

(e) *$PM_{2.5}$ areas.* This criterion may be met in $PM_{2.5}$ nonattainment areas if a regional emissions analysis that satisfies the requirements of §93.122 and paragraphs (g) through (j) of this section demonstrates that for each analysis year and for each of the pollutants described in paragraph (f) of this section, one of the following requirements is met:

(1) The emissions predicted in the ''Action'' scenario are not greater than the emissions predicted in the ''Baseline'' scenario, and this can be reasonably expected to be true in the periods between the analysis years; or

(2) The emissions predicted in the ''Action'' scenario are not greater than:

(i) 2002 emissions, in areas designated nonattainment for the 1997 $PM_{2.5}$ NAAQS; or

(ii) Emissions in the most recent year for which EPA's Air Emissions Reporting Requirements (40 CFR part 51, subpart A) requires submission of on-road mobile source emissions inventories, as of the effective date of nonattainment designations for any $PM_{2.5}$ NAAQS other than the 1997 $PM_{2.5}$ NAAQS.

(f) *Pollutants.* The regional emissions analysis must be performed for the following pollutants:

(1) VOC in ozone areas;

(2) NO_X in ozone areas, unless the EPA Administrator determines that additional reductions of NO_X would not contribute to attainment;

(3) CO in CO areas;

(4) PM_{10} in PM_{10} areas;

(5) VOC and/or NO_X in PM_{10} areas if the EPA Regional Administrator or the director of the State air agency has made a finding that one or both of such precursor emissions from within the area are a significant contributor to the PM_{10} nonattainment problem and has so notified the MPO and DOT;

(6) NO_X in NO_2 areas;

(7) $PM_{2.5}$ in $PM_{2.5}$ areas;

(8) Reentrained road dust in $PM_{2.5}$ areas only if the EPA Regional Administrator or the director of the State air agency has made a finding that emissions from reentrained road dust within the area are a significant contributor to the $PM_{2.5}$ nonattainment problem and has so notified the MPO and DOT;

(9) NO_X in $PM_{2.5}$ areas, unless the EPA Regional Administrator and the director of the State air agency have made a finding that emissions of NO_X from within the area are not a significant contributor to the $PM_{2.5}$ nonattainment problem and has so notified the MPO and DOT; and

(10) VOC, SO_2 and/or ammonia in $PM_{2.5}$ areas if the EPA Regional Administrator or the director of the State air agency has made a finding that any of such precursor emissions from within the area are a significant contributor to the $PM_{2.5}$ nonattainment problem and has so notified the MPO and DOT.

(g) *Analysis years.* (1) The regional emissions analysis must be performed for analysis years that are no more than ten years apart. The first analysis year must be no more than five years beyond the year in which the conformity determination is being made. The last year of the timeframe of the conformity determination (as described under §93.106(d)) must also be an analysis year.

(2) For areas using paragraphs (b)(2)(i), (c)(2)(i), (d)(1), and (e)(1) of this section, a regional emissions analysis that satisfies the requirements of §93.122 and paragraphs (g) through (j) of this section would not be required for analysis years in which the transportation projects and planning assumptions in the ''Action'' and ''Baseline'' scenarios are exactly the same. In such a case, paragraph (a) of this section can be satisfied by documenting that the transportation projects and planning assumptions in both scenarios are exactly the same, and consequently, the emissions predicted in the ''Action'' scenario are not

greater than the emissions predicted in the ''Baseline'' scenario for such analysis years.

(3) When the timeframe of the conformity determination is shortened under § 93.106(d)(2), the conformity determination must be accompanied by a regional emissions analysis (for informational purposes only) for the last year of the transportation plan.

(h) *''Baseline'' scenario.* The regional emissions analysis required by paragraphs (b) through (e) of this section must estimate the emissions that would result from the ''Baseline'' scenario in each analysis year. The ''Baseline'' scenario must be defined for each of the analysis years. The ''Baseline'' scenario is the future transportation system that will result from current programs, including the following (except that exempt projects listed in § 93.126 and projects exempt from regional emissions analysis as listed in § 93.127 need not be explicitly considered):

(1) All in-place regionally significant highway and transit facilities, services and activities;

(2) All ongoing travel demand management or transportation system management activities; and

(3) Completion of all regionally significant projects, regardless of funding source, which are currently under construction or are undergoing right-of-way acquisition (except for hardship acquisition and protective buying); come from the first year of the previously conforming transportation plan and/or TIP; or have completed the NEPA process.

(i) *''Action'' scenario.* The regional emissions analysis required by paragraphs (b) and (c) of this section must estimate the emissions that would result from the ''Action'' scenario in each analysis year. The ''Action'' scenario must be defined for each of the analysis years. The ''Action'' scenario is the transportation system that would result from the implementation of the proposed action (transportation plan, TIP, or project not from a conforming transportation plan and TIP) and all other expected regionally significant projects in the nonattainment area. The ''Action'' scenario must include the following (except that exempt projects listed in § 93.126 and projects exempt from regional emissions analysis as listed in § 93.127 need not be explicitly considered):

(1) All facilities, services, and activities in the ''Baseline'' scenario;

(2) Completion of all TCMs and regionally significant projects (including facilities, services, and activities) specifically identified in the proposed transportation plan which will be operational or in effect in the analysis year, except that regulatory TCMs may not be assumed to begin at a future time unless the regulation is already adopted by the enforcing jurisdiction or the TCM is identified in the applicable implementation plan;

(3) All travel demand management programs and transportation system management activities known to the MPO, but not included in the applicable implementation plan or utilizing any Federal funding or approval, which have been fully adopted and/or funded by the enforcing jurisdiction or sponsoring agency since the last conformity determination;

(4) The incremental effects of any travel demand management programs and transportation system management activities known to the MPO, but not included in the applicable implementation plan or utilizing any Federal funding or approval, which were adopted and/or funded prior to the date of the last conformity determination, but which have been modified since then to be more stringent or effective;

(5) Completion of all expected regionally significant highway and transit projects which are not from a conforming transportation plan and TIP; and

(6) Completion of all expected regionally significant non-FHWA/FTA highway and transit projects that have clear funding sources and commitments leading toward their implementation and completion by the analysis year.

(j) *Projects not from a conforming transportation plan and TIP.* For the regional emissions analysis required by paragraphs (b) through (e) of this section, if the project which is not from a conforming transportation plan and

TIP is a modification of a project currently in the plan or TIP, the 'Baseline' scenario must include the project with its original design concept and scope, and the 'Action' scenario must include the project with its new design concept and scope.

[62 FR 43801, Aug. 15, 1997, as amended at 69 FR 40079, July 1, 2004; 70 FR 24291, May 6, 2005; 73 FR 4441, Jan. 24, 2008; 75 FR 14285, Mar. 24, 2010]

§ 93.120 Consequences of control strategy implementation plan failures.

(a) *Disapprovals.* (1) If EPA disapproves any submitted control strategy implementation plan revision (with or without a protective finding), the conformity status of the transportation plan and TIP shall lapse on the date that highway sanctions as a result of the disapproval are imposed on the nonattainment area under section 179(b)(1) of the CAA. No new transportation plan, TIP, or project may be found to conform until another control strategy implementation plan revision fulfilling the same CAA requirements is submitted and conformity to this submission is determined.

(2) If EPA disapproves a submitted control strategy implementation plan revision without making a protective finding, only projects in the first four years of the currently conforming transportation plan and TIP or that meet the requirements of § 93.104(f) during the 12-month lapse grace period may be found to conform. This means that beginning on the effective date of a disapproval without a protective finding, no transportation plan, TIP, or project not in the first four years of the currently conforming transportation plan and TIP or that meets the requirements of § 93.104(f) during the 12-month lapse grace period may be found to conform until another control strategy implementation plan revision fulfilling the same CAA requirements is submitted, EPA finds its motor vehicle emissions budget(s) adequate pursuant to § 93.118 or approves the submission, and conformity to the implementation plan revision is determined.

(3) In disapproving a control strategy implementation plan revision, EPA would give a protective finding where a submitted plan contains adopted control measures or written commitments to adopt enforceable control measures that fully satisfy the emissions reductions requirements relevant to the statutory provision for which the implementation plan revision was submitted, such as reasonable further progress or attainment.

(b) *Failure to submit and incompleteness.* In areas where EPA notifies the State, MPO, and DOT of the State's failure to submit a control strategy implementation plan or submission of an incomplete control strategy implementation plan revision (either of which initiates the sanction process under CAA sections 179 or 110(m)), the conformity status of the transportation plan and TIP shall lapse on the date that highway sanctions are imposed on the nonattainment area for such failure under section 179(b)(1) of the CAA, unless the failure has been remedied and acknowledged by a letter from the EPA Regional Administrator.

(c) *Federal implementation plans.* If EPA promulgates a Federal implementation plan that contains motor vehicle emissions budget(s) as a result of a State failure, the conformity lapse imposed by this section because of that State failure is removed.

[62 FR 43801, Aug. 15, 1997, as amended at 69 FR 40080, July 1, 2004; 73 FR 4441, Jan. 24, 2008]

§ 93.121 Requirements for adoption or approval of projects by other recipients of funds designated under title 23 U.S.C. or the Federal Transit Laws.

(a) Except as provided in paragraph (b) of this section, no recipient of Federal funds designated under title 23 U.S.C. or the Federal Transit Laws shall adopt or approve a regionally significant highway or transit project, regardless of funding source, unless the recipient finds that the requirements of one of the following are met:

(1) The project comes from the currently conforming transportation plan and TIP (or meets the requirements of § 93.104(f) during the 12-month lapse grace period), and the project's design concept and scope have not changed

significantly from those that were included in the regional emissions analysis for that transportation plan and TIP;

(2) The project is included in the regional emissions analysis for the currently conforming transportation plan and TIP conformity determination (or meets the requirements of § 93.104(f) during the 12-month lapse grace period), even if the project is not strictly included in the transportation plan or TIP for the purpose of MPO project selection or endorsement, and the project's design concept and scope have not changed significantly from those that were included in the regional emissions analysis; or

(3) A new regional emissions analysis including the project and the currently conforming transportation plan and TIP demonstrates that the transportation plan and TIP would still conform if the project were implemented (consistent with the requirements of §§ 93.118 and/or 93.119 for a project not from a conforming transportation plan and TIP).

(b) In isolated rural nonattainment and maintenance areas subject to § 93.109(n), no recipient of Federal funds designated under title 23 U.S.C. or the Federal Transit Laws shall adopt or approve a regionally significant highway or transit project, regardless of funding source, unless the recipient finds that the requirements of one of the following are met:

(1) The project was included in the regional emissions analysis supporting the most recent conformity determination that reflects the portion of the statewide transportation plan and statewide TIP which are in the nonattainment or maintenance area, and the project's design concept and scope has not changed significantly; or

(2) A new regional emissions analysis including the project and all other regionally significant projects expected in the nonattainment or maintenance area demonstrates that those projects in the statewide transportation plan and statewide TIP which are in the nonattainment or maintenance area would still conform if the project were implemented (consistent with the requirements of §§ 93.118 and/or 93.119 for projects not from a conforming transportation plan and TIP).

(c) Notwithstanding paragraphs (a) and (b) of this section, in nonattainment and maintenance areas subject to § 93.109(l) or (m) for a given pollutant/precursor and NAAQS, no recipient of Federal funds designated under title 23 U.S.C. or the Federal Transit Laws shall adopt or approve a regionally significant highway or transit project, regardless of funding source, unless the recipient finds that the requirements of one of the following are met for that pollutant/precursor and NAAQS:

(1) The project was included in the most recent conformity determination for the transportation plan and TIP and the project's design concept and scope has not changed significantly; or

(2) The project was included in the most recent conformity determination that reflects the portion of the statewide transportation plan and statewide TIP which are in the nonattainment or maintenance area, and the project's design concept and scope has not changed significantly.

[62 FR 43801, Aug. 15, 1997, as amended at 69 FR 40080, July 1, 2004; 73 FR 4441, Jan. 24, 2008; 75 FR 14285, Mar. 24, 2010]

§ 93.122 Procedures for determining regional transportation-related emissions.

(a) *General requirements.* (1) The regional emissions analysis required by §§ 93.118 and 93.119 for the transportation plan, TIP, or project not from a conforming plan and TIP must include all regionally significant projects expected in the nonattainment or maintenance area. The analysis shall include FHWA/FTA projects proposed in the transportation plan and TIP and all other regionally significant projects which are disclosed to the MPO as required by § 93.105. Projects which are not regionally significant are not required to be explicitly modeled, but vehicle miles traveled (VMT) from such projects must be estimated in accordance with reasonable professional practice. The effects of TCMs and similar projects that are not regionally significant may also be estimated in accordance with reasonable professional practice.

(2) The emissions analysis may not include for emissions reduction credit any TCMs or other measures in the applicable implementation plan which have been delayed beyond the scheduled date(s) until such time as their implementation has been assured. If the measure has been partially implemented and it can be demonstrated that it is providing quantifiable emission reduction benefits, the emissions analysis may include that emissions reduction credit.

(3) Emissions reduction credit from projects, programs, or activities which require a regulatory action in order to be implemented may not be included in the emissions analysis unless:

(i) The regulatory action is already adopted by the enforcing jurisdiction;

(ii) The project, program, or activity is included in the applicable implementation plan;

(iii) The control strategy implementation plan submission or maintenance plan submission that establishes the motor vehicle emissions budget(s) for the purposes of §93.118 contains a written commitment to the project, program, or activity by the agency with authority to implement it; or

(iv) EPA has approved an opt-in to a Federally enforced program, EPA has promulgated the program (if the control program is a Federal responsibility, such as vehicle tailpipe standards), or the Clean Air Act requires the program without need for individual State action and without any discretionary authority for EPA to set its stringency, delay its effective date, or not implement the program.

(4) Emissions reduction credit from control measures that are not included in the transportation plan and TIP and that do not require a regulatory action in order to be implemented may not be included in the emissions analysis unless the conformity determination includes written commitments to implementation from the appropriate entities.

(i) Persons or entities voluntarily committing to control measures must comply with the obligations of such commitments.

(ii) The conformity implementation plan revision required in §51.390 of this chapter must provide that written commitments to control measures that are not included in the transportation plan and TIP must be obtained prior to a conformity determination and that such commitments must be fulfilled.

(5) A regional emissions analysis for the purpose of satisfying the requirements of §93.119 must make the same assumptions in both the ''Baseline'' and ''Action'' scenarios regarding control measures that are external to the transportation system itself, such as vehicle tailpipe or evaporative emission standards, limits on gasoline volatility, vehicle inspection and maintenance programs, and oxygenated or reformulated gasoline or diesel fuel.

(6) The ambient temperatures used for the regional emissions analysis shall be consistent with those used to establish the emissions budget in the applicable implementation plan. All other factors, for example the fraction of travel in a hot stabilized engine mode, must be consistent with the applicable implementation plan, unless modified after interagency consultation according to §93.105(c)(1)(i) to incorporate additional or more geographically specific information or represent a logically estimated trend in such factors beyond the period considered in the applicable implementation plan.

(7) Reasonable methods shall be used to estimate nonattainment or maintenance area VMT on off-network roadways within the urban transportation planning area, and on roadways outside the urban transportation planning area.

(b) Regional emissions analysis in serious, severe, and extreme ozone nonattainment areas and serious CO nonattainment areas must meet the requirements of paragraphs (b) (1) through (3) of this section if their metropolitan planning area contains an urbanized area population over 200,000.

(1) By January 1, 1997, estimates of regional transportation-related emissions used to support conformity determinations must be made at a minimum using network-based travel models according to procedures and methods that are available and in practice and supported by current and available documentation. These procedures, methods, and practices are available from

DOT and will be updated periodically. Agencies must discuss these modeling procedures and practices through the interagency consultation process, as required by § 93.105(c)(1)(i). Network-based travel models must at a minimum satisfy the following requirements:

(i) Network-based travel models must be validated against observed counts (peak and off-peak, if possible) for a base year that is not more than 10 years prior to the date of the conformity determination. Model forecasts must be analyzed for reasonableness and compared to historical trends and other factors, and the results must be documented;

(ii) Land use, population, employment, and other network-based travel model assumptions must be documented and based on the best available information;

(iii) Scenarios of land development and use must be consistent with the future transportation system alternatives for which emissions are being estimated. The distribution of employment and residences for different transportation options must be reasonable;

(iv) A capacity-sensitive assignment methodology must be used, and emissions estimates must be based on a methodology which differentiates between peak and off-peak link volumes and speeds and uses speeds based on final assigned volumes;

(v) Zone-to-zone travel impedances used to distribute trips between origin and destination pairs must be in reasonable agreement with the travel times that are estimated from final assigned traffic volumes. Where use of transit currently is anticipated to be a significant factor in satisfying transportation demand, these times should also be used for modeling mode splits; and

(vi) Network-based travel models must be reasonably sensitive to changes in the time(s), cost(s), and other factors affecting travel choices.

(2) Reasonable methods in accordance with good practice must be used to estimate traffic speeds and delays in a manner that is sensitive to the estimated volume of travel on each roadway segment represented in the network-based travel model.

(3) Highway Performance Monitoring System (HPMS) estimates of vehicle miles traveled (VMT) shall be considered the primary measure of VMT within the portion of the nonattainment or maintenance area and for the functional classes of roadways included in HPMS, for urban areas which are sampled on a separate urban area basis. For areas with network-based travel models, a factor (or factors) may be developed to reconcile and calibrate the network-based travel model estimates of VMT in the base year of its validation to the HPMS estimates for the same period. These factors may then be applied to model estimates of future VMT. In this factoring process, consideration will be given to differences between HPMS and network-based travel models, such as differences in the facility coverage of the HPMS and the modeled network description. Locally developed count- based programs and other departures from these procedures are permitted subject to the interagency consultation procedures of § 93.105(c)(1)(i).

(c) *Two-year grace period for regional emissions analysis requirements in certain ozone and CO areas.* The requirements of paragraph (b) of this section apply to such areas or portions of such areas that have not previously been required to meet these requirements for any existing NAAQS two years from the following:

(1) The effective date of EPA's reclassification of an ozone or CO nonattainment area that has an urbanized area population greater than 200,000 to serious or above;

(2) The official notice by the Census Bureau that determines the urbanized area population of a serious or above ozone or CO nonattainment area to be greater than 200,000; or,

(3) The effective date of EPA's action that classifies a newly designated ozone or CO nonattainment area that has an urbanized area population greater than 200,000 as serious or above.

(d) In all areas not otherwise subject to paragraph (b) of this section, regional emissions analyses must use those procedures described in paragraph (b) of this section if the use of those procedures has been the previous practice of the MPO. Otherwise, areas

not subject to paragraph (b) of this section may estimate regional emissions using any appropriate methods that account for VMT growth by, for example, extrapolating historical VMT or projecting future VMT by considering growth in population and historical growth trends for VMT per person. These methods must also consider future economic activity, transit alternatives, and transportation system policies.

(e) *PM_{10} from construction-related fugitive dust.* (1) For areas in which the implementation plan does not identify construction-related fugitive PM_{10} as a contributor to the nonattainment problem, the fugitive PM_{10} emissions associated with highway and transit project construction are not required to be considered in the regional emissions analysis.

(2) In PM_{10} nonattainment and maintenance areas with implementation plans which identify construction-related fugitive PM_{10} as a contributor to the nonattainment problem, the regional PM_{10} emissions analysis shall consider construction-related fugitive PM_{10} and shall account for the level of construction activity, the fugitive PM_{10} control measures in the applicable implementation plan, and the dust-producing capacity of the proposed activities.

(f) *$PM_{2.5}$ from construction-related fugitive dust.* (1) For $PM_{2.5}$ areas in which the implementation plan does not identify construction-related fugitive $PM_{2.5}$ as a significant contributor to the nonattainment problem, the fugitive $PM_{2.5}$ emissions associated with highway and transit project construction are not required to be considered in the regional emissions analysis.

(2) In $PM_{2.5}$ nonattainment and maintenance areas with implementation plans which identify construction-related fugitive $PM_{2.5}$ as a significant contributor to the nonattainment problem, the regional $PM_{2.5}$ emissions analysis shall consider construction-related fugitive $PM_{2.5}$ and shall account for the level of construction activity, the fugitive $PM_{2.5}$ control measures in the applicable implementation plan, and the dust-producing capacity of the proposed activities.

(g) *Reliance on previous regional emissions analysis.* (1) Conformity determinations for a new transportation plan and/or TIP may be demonstrated to satisfy the requirements of §§ 93.118 (''Motor vehicle emissions budget'') or 93.119 (''Interim emissions in areas without motor vehicle emissions budgets'') without new regional emissions analysis if the previous regional emissions analysis also applies to the new plan and/or TIP. This requires a demonstration that:

(i) The new plan and/or TIP contain all projects which must be started in the plan and TIP's timeframes in order to achieve the highway and transit system envisioned by the transportation plan;

(ii) All plan and TIP projects which are regionally significant are included in the transportation plan with design concept and scope adequate to determine their contribution to the transportation plan's and/or TIP's regional emissions at the time of the previous conformity determination;

(iii) The design concept and scope of each regionally significant project in the new plan and/or TIP are not significantly different from that described in the previous transportation plan; and

(iv) The previous regional emissions analysis is consistent with the requirements of §§ 93.118 (including that conformity to all currently applicable budgets is demonstrated) and/or 93.119, as applicable.

(2) A project which is not from a conforming transportation plan and a conforming TIP may be demonstrated to satisfy the requirements of § 93.118 or § 93.119 without additional regional emissions analysis if allocating funds to the project will not delay the implementation of projects in the transportation plan or TIP which are necessary to achieve the highway and transit system envisioned by the transportation plan, the previous regional emissions analysis is still consistent with the requirements of § 93.118 (including that conformity to all currently applicable budgets is demonstrated) and/or § 93.119, as applicable, and if the project is either:

(i) Not regionally significant; or

(ii) Included in the conforming transportation plan (even if it is not specifically included in the latest conforming TIP) with design concept and scope adequate to determine its contribution to the transportation plan's regional emissions at the time of the transportation plan's conformity determination, and the design concept and scope of the project is not significantly different from that described in the transportation plan.

(3) A conformity determination that relies on paragraph (g) of this section does not satisfy the frequency requirements of § 93.104(b) or (c).

[62 FR 43801, Aug. 15, 1997, as amended at 69 FR 40080, July 1, 2004]

§ 93.123 Procedures for determining localized CO, PM_{10}, and $PM_{2.5}$ concentrations (hot-spot analysis).

(a) *CO hot-spot analysis.* (1) The demonstrations required by § 93.116 (''Localized CO, PM_{10}, and $PM_{2.5}$ violations'') must be based on quantitative analysis using the applicable air quality models, data bases, and other requirements specified in 40 CFR part 51, Appendix W (Guideline on Air Quality Models). These procedures shall be used in the following cases, unless different procedures developed through the interagency consultation process required in § 93.105 and approved by the EPA Regional Administrator are used:

(i) For projects in or affecting locations, areas, or categories of sites which are identified in the applicable implementation plan as sites of violation or possible violation;

(ii) For projects affecting intersections that are at Level-of-Service D, E, or F, or those that will change to Level-of-Service D, E, or F because of increased traffic volumes related to the project;

(iii) For any project affecting one or more of the top three intersections in the nonattainment or maintenance area with highest traffic volumes, as identified in the applicable implementation plan; and

(iv) For any project affecting one or more of the top three intersections in the nonattainment or maintenance area with the worst level of service, as identified in the applicable implementation plan.

(2) In cases other than those described in paragraph (a)(1) of this section, the demonstrations required by § 93.116 may be based on either:

(i) Quantitative methods that represent reasonable and common professional practice; or

(ii) A qualitative consideration of local factors, if this can provide a clear demonstration that the requirements of § 93.116 are met.

(3) DOT, in consultation with EPA, may also choose to make a categorical hot-spot finding that (93.116(a) is met without further hot-spot analysis for any project described in paragraphs (a)(1) and (a)(2) of this section based on appropriate modeling. DOT, in consultation with EPA, may also consider the current air quality circumstances of a given CO nonattainment or maintenance area in categorical hot-spot findings for applicable FHWA or FTA projects.

(b) *PM_{10} and $PM_{2.5}$ hot-spot analyses.* (1) The hot-spot demonstration required by § 93.116 must be based on quantitative analysis methods for the following types of projects:

(i) New highway projects that have a significant number of diesel vehicles, and expanded highway projects that have a significant increase in the number of diesel vehicles;

(ii) Projects affecting intersections that are at Level-of-Service D, E, or F with a significant number of diesel vehicles, or those that will change to Level-of-Service D, E, or F because of increased traffic volumes from a significant number of diesel vehicles related to the project;

(iii) New bus and rail terminals and transfer points that have a significant number of diesel vehicles congregating at a single location;

(iv) Expanded bus and rail terminals and transfer points that significantly increase the number of diesel vehicles congregating at a single location; and

(v) Projects in or affecting locations, areas, or categories of sites which are identified in the PM_{10} or $PM_{2.5}$ applicable implementation plan or implementation plan submission, as appropriate, as sites of violation or possible violation.

(2) Where quantitative analysis methods are not available, the demonstration required by § 93.116 for projects described in paragraph (b)(1) of this section must be based on a qualitative consideration of local factors.

(3) DOT, in consultation with EPA, may also choose to make a categorical hot-spot finding that § 93.116 is met without further hot-spot analysis for any project described in paragraph (b)(1) of this section based on appropriate modeling. DOT, in consultation with EPA, may also consider the current air quality circumstances of a given $PM_{2.5}$ or PM_{10} nonattainment or maintenance area in categorical hot-spot findings for applicable FHWA or FTA projects.

(4) The requirements for quantitative analysis contained in this paragraph (b) will not take effect until EPA releases modeling guidance on this subject and announces in the FEDERAL REGISTER that these requirements are in effect.

(c) *General requirements.* (1) Estimated pollutant concentrations must be based on the total emissions burden which may result from the implementation of the project, summed together with future background concentrations. The total concentration must be estimated and analyzed at appropriate receptor locations in the area substantially affected by the project.

(2) Hot-spot analyses must include the entire project, and may be performed only after the major design features which will significantly impact concentrations have been identified. The future background concentration should be estimated by multiplying current background by the ratio of future to current traffic and the ratio of future to current emission factors.

(3) Hot-spot analysis assumptions must be consistent with those in the regional emissions analysis for those inputs which are required for both analyses.

(4) CO, PM_{10}, or $PM_{2.5}$ mitigation or control measures shall be assumed in the hot-spot analysis only where there are written commitments from the project sponsor and/or operator to implement such measures, as required by § 93.125(a).

(5) CO, PM_{10}, and $PM_{2.5}$ hot-spot analyses are not required to consider construction-related activities which cause temporary increases in emissions. Each site which is affected by construction-related activities shall be considered separately, using established ''Guideline'' methods. Temporary increases are defined as those which occur only during the construction phase and last five years or less at any individual site.

[58 FR 62235, Nov. 24, 1993, as amended at 71 FR 12510, Mar. 10, 2006; 73 FR 4441, Jan. 24, 2008]

§ 93.124 Using the motor vehicle emissions budget in the applicable implementation plan (or implementation plan submission).

(a) In interpreting an applicable implementation plan (or implementation plan submission) with respect to its motor vehicle emissions budget(s), the MPO and DOT may not infer additions to the budget(s) that are not explicitly intended by the implementation plan (or submission). Unless the implementation plan explicitly quantifies the amount by which motor vehicle emissions could be higher while still allowing a demonstration of compliance with the milestone, attainment, or maintenance requirement and explicitly states an intent that some or all of this additional amount should be available to the MPO and DOT in the emissions budget for conformity purposes, the MPO may not interpret the budget to be higher than the implementation plan's estimate of future emissions. This applies in particular to applicable implementation plans (or submissions) which demonstrate that after implementation of control measures in the implementation plan:

(1) Emissions from all sources will be less than the total emissions that would be consistent with a required demonstration of an emissions reduction milestone;

(2) Emissions from all sources will result in achieving attainment prior to the attainment deadline and/or ambient concentrations in the attainment deadline year will be lower than needed to demonstrate attainment; or

(3) Emissions will be lower than needed to provide for continued maintenance.

(b) A conformity demonstration shall not trade emissions among budgets which the applicable implementation plan (or implementation plan submission) allocates for different pollutants or precursors, or among budgets allocated to motor vehicles and other sources, unless the implementation plan establishes appropriate mechanisms for such trades.

(c) If the applicable implementation plan (or implementation plan submission) estimates future emissions by geographic subarea of the nonattainment area, the MPO and DOT are not required to consider this to establish subarea budgets, unless the applicable implementation plan (or implementation plan submission) explicitly indicates an intent to create such subarea budgets for the purposes of conformity.

(d) If a nonattainment area includes more than one MPO, the implementation plan may establish motor vehicle emissions budgets for each MPO, or else the MPOs must collectively make a conformity determination for the entire nonattainment area.

[62 FR 43801. Aug. 15, 1997, as amended at 69 FR 40081, July 1, 2004]

§ 93.125 Enforceability of design concept and scope and project-level mitigation and control measures.

(a) Prior to determining that a transportation project is in conformity, the MPO, other recipient of funds designated under title 23 U.S.C. or the Federal Transit Laws, FHWA, or FTA must obtain from the project sponsor and/or operator written commitments to implement in the construction of the project and operation of the resulting facility or service any project-level mitigation or control measures which are identified as conditions for NEPA process completion with respect to local CO, PM_{10}, or $PM_{2.5}$ impacts. Before a conformity determination is made, written commitments must also be obtained for project-level mitigation or control measures which are conditions for making conformity determinations for a transportation plan or TIP and are included in the project design concept and scope which is used in the regional emissions analysis required by §§ 93.118 (''Motor vehicle emissions budget'') and 93.119 (''Interim emissions in areas without motor vehicle emissions budgets'') or used in the project-level hot-spot analysis required by § 93.116.

(b) Project sponsors voluntarily committing to mitigation measures to facilitate positive conformity determinations must comply with the obligations of such commitments.

(c) The implementation plan revision required in § 51.390 of this chapter shall provide that written commitments to mitigation measures must be obtained prior to a positive conformity determination, and that project sponsors must comply with such commitments.

(d) If the MPO or project sponsor believes the mitigation or control measure is no longer necessary for conformity, the project sponsor or operator may be relieved of its obligation to implement the mitigation or control measure if it can demonstrate that the applicable hot-spot requirements of § 93.116, emission budget requirements of § 93.118, and interim emissions requirements of § 93.119 are satisfied without the mitigation or control measure, and so notifies the agencies involved in the interagency consultation process required under § 93.105. The MPO and DOT must find that the transportation plan and TIP still satisfy the applicable requirements of §§ 93.118 and/or 93.119 and that the project still satisfies the requirements of § 93.116, and therefore that the conformity determinations for the transportation plan, TIP, and project are still valid. This finding is subject to the applicable public consultation requirements in § 93.105(e) for conformity determinations for projects.

[62 FR 43801, Aug. 15, 1997, as amended at 69 FR 40081, July 1, 2004; 71 FR 12510, Mar. 10, 2006]

§ 93.126 Exempt projects.

Notwithstanding the other requirements of this subpart, highway and transit projects of the types listed in table 2 of this section are exempt from the requirement to determine conformity. Such projects may proceed toward implementation even in the absence of a conforming transportation

plan and TIP. A particular action of the type listed in table 2 of this section is not exempt if the MPO in consultation with other agencies (see § 93.105(c)(1)(iii)), the EPA, and the FHWA (in the case of a highway project) or the FTA (in the case of a transit project) concur that it has potentially adverse emissions impacts for any reason. States and MPOs must ensure that exempt projects do not interfere with TCM implementation. Table 2 follows:

TABLE 2—EXEMPT PROJECTS

Safety

Railroad/highway crossing.
Projects that correct, improve, or eliminate a hazardous location or feature.
Safer non-Federal-aid system roads.
Shoulder improvements.
Increasing sight distance.
Highway Safety Improvement Program implementation.
Traffic control devices and operating assistance other than signalization projects.
Railroad/highway crossing warning devices.
Guardrails, median barriers, crash cushions.
Pavement resurfacing and/or rehabilitation.
Pavement marking.
Emergency relief (23 U.S.C. 125).
Fencing.
Skid treatments.
Safety roadside rest areas.
Adding medians.
Truck climbing lanes outside the urbanized area.
Lighting improvements.
Widening narrow pavements or reconstructing bridges (no additional travel lanes).
Emergency truck pullovers.

Mass Transit

Operating assistance to transit agencies.
Purchase of support vehicles.
Rehabilitation of transit vehicles [1].
Purchase of office, shop, and operating equipment for existing facilities.
Purchase of operating equipment for vehicles (e.g., radios, fareboxes, lifts, etc.).
Construction or renovation of power, signal, and communications systems.
Construction of small passenger shelters and information kiosks.
Reconstruction or renovation of transit buildings and structures (e.g., rail or bus buildings, storage and maintenance facilities, stations, terminals, and ancillary structures).
Rehabilitation or reconstruction of track structures, track, and trackbed in existing rights-of-way.
Purchase of new buses and rail cars to replace existing vehicles or for minor expansions of the fleet [1].
Construction of new bus or rail storage/maintenance facilities categorically excluded in 23 CFR part 771.

Air Quality

Continuation of ride-sharing and van-pooling promotion activities at current levels.
Bicycle and pedestrian facilities.

Other

Specific activities which do not involve or lead directly to construction, such as:
Planning and technical studies.
Grants for training and research programs.
Planning activities conducted pursuant to titles 23 and 49 U.S.C.
Federal-aid systems revisions.
Engineering to assess social, economic, and environmental effects of the proposed action or alternatives to that action.
Noise attenuation.
Emergency or hardship advance land acquisitions (23 CFR 710.503).
Acquisition of scenic easements.
Plantings, landscaping, etc.
Sign removal.
Directional and informational signs.
Transportation enhancement activities (except rehabilitation and operation of historic transportation buildings, structures, or facilities).
Repair of damage caused by natural disasters, civil unrest, or terrorist acts, except projects involving substantial functional, locational or capacity changes.

NOTE: [1]In PM_{10} and $PM_{2.5}$ nonattainment or maintenance areas, such projects are exempt only if they are in compliance with control measures in the applicable implementation plan.

[62 FR 43801, Aug. 15, 1997, as amended at 69 FR 40081, July 1, 2004; 71 FR 12510, Mar. 10, 2006; 73 FR 4441, Jan. 24, 2008]

§ 93.127 Projects exempt from regional emissions analyses.

Notwithstanding the other requirements of this subpart, highway and transit projects of the types listed in Table 3 of this section are exempt from regional emissions analysis requirements. The local effects of these projects with respect to CO concentrations must be considered to determine if a hot-spot analysis is required prior to making a project-level conformity determination. The local effects of projects with respect to PM_{10} and $PM_{2.5}$ concentrations must be considered and a hot-spot analysis performed prior to

making a project-level conformity determination, if a project in Table 3 also meets the criteria in § 93.123(b)(1). These projects may then proceed to the project development process even in the absence of a conforming transportation plan and TIP. A particular action of the type listed in Table 3 of this section is not exempt from regional emissions analysis if the MPO in consultation with other agencies (see § 93.105(c)(1)(iii)), the EPA, and the FHWA (in the case of a highway project) or the FTA (in the case of a transit project) concur that it has potential regional impacts for any reason. Table 3 follows:

TABLE 3—PROJECTS EXEMPT FROM REGIONAL EMISSIONS ANALYSES

Intersection channelization projects.
Intersection signalization projects at individual intersections.
Interchange reconfiguration projects.
Changes in vertical and horizontal alignment.
Truck size and weight inspection stations.
Bus terminals and transfer points.

[58 FR 62235, Nov. 24, 1993, as amended at 71 FR 12511, Mar. 10, 2006]

§ 93.128 Traffic signal synchronization projects.

Traffic signal synchronization projects may be approved, funded, and implemented without satisfying the requirements of this subpart. However, all subsequent regional emissions analyses required by §§ 93.118 and 93.119 for transportation plans, TIPs, or projects not from a conforming plan and TIP must include such regionally significant traffic signal synchronization projects.

§ 93.129 Special exemptions from conformity requirements for pilot program areas.

EPA and DOT may exempt no more than six areas for no more than three years from certain requirements of this subpart if these areas are selected to participate in a conformity pilot program and have developed alternative requirements that have been approved by EPA as an implementation plan revision in accordance with § 51.390 of this chapter. For the duration of the pilot program, areas selected to participate in the pilot program must comply with the conformity requirements of the pilot area's implementation plan revision for § 51.390 of this chapter and all other requirements in 40 CFR parts 51 and 93 that are not covered by the pilot area's implementation plan revision for § 51.390 of this chapter. The alternative conformity requirements in conjunction with any applicable state and/or federal conformity requirements must be proposed to fulfill all of the requirements of and achieve results equivalent to or better than section 176(c) of the Clean Air Act. After the three-year duration of the pilot program has expired, areas will again be subject to all of the requirements of this subpart and 40 CFR part 51, subpart T, and/or to the requirements of any implementation plan revision that was previously approved by EPA in accordance with § 51.390 of this chapter.

[64 FR 13483, Mar. 18, 1999]

Subpart B—Determining Conformity of General Federal Actions to State or Federal Implementation Plans

SOURCE: 58 FR 63253, Nov. 30, 1993, unless otherwise noted.

§ 93.150 Prohibition.

(a) No department, agency or instrumentality of the Federal Government shall engage in, support in any way or provide financial assistance for, license or permit, or approve any activity which does not conform to an applicable implementation plan.

(b) A Federal agency must make a determination that a Federal action conforms to the applicable implementation plan in accordance with the requirements of this subpart before the action is taken.

(c) Paragraph (b) of this section does not include Federal actions where:

(1) A National Environmental Policy Act (NEPA) analysis was completed as evidenced by a final environmental assessment (EA), environmental impact statement (EIS), or finding of no significant impact (FONSI) that was prepared prior to January 31, 1994; or

(2)(i) Prior to January 31, 1994, an environmental analysis was commenced

or a contract was awarded to develop the specific environmental analysis;

(ii) Sufficient environmental analysis is completed by March 15, 1994 so that the Federal agency may determine that the Federal action is in conformity with the specific requirements and the purposes of the applicable SIP pursuant to the agency's affirmative obligation under section 176(c) of the Clean Air Act (Act); and

(iii) A written determination of conformity under section 176(c) of the Act has been made by the Federal agency responsible for the Federal action by March 15, 1994.

(d) Notwithstanding any provision of this subpart, a determination that an action is in conformance with the applicable implementation plan does not exempt the action from any other requirements of the applicable implementation plan, the National Environmental Policy Act (NEPA), or the Clean Air Act (Act).

[58 FR 63253, Nov. 30, 1993; 58 FR 67442, Dec. 21, 1993]

EFFECTIVE DATE NOTE: At 75 FR 17272, Apr. 5, 2010, § 93.150 was amended by removing and reserving paragraph (c) and by adding paragraph (e), effective July 6, 2010. For the convenience of the user, the added text is set forth as follows:

§ 93.150 Prohibition.

* * * * *

(e) If an action would result in emissions originating in more than one nonattainment or maintenance area, the conformity must be evaluated for each area separately.

§ 93.151 State implementation plan (SIP) revision.

The Federal conformity rules under this subpart, in addition to any existing applicable State requirements, establish the conformity criteria and procedures necessary to meet the Act requirements until such time as the required conformity SIP revision is approved by EPA. A State's conformity provisions must contain criteria and procedures that are no less stringent than the requirements described in this subpart. A State may establish more stringent conformity criteria and procedures only if they apply equally to nonfederal as well as Federal entities. Following EPA approval of the State conformity provisions (or a portion thereof) in a revision to the applicable SIP, the approved (or approved portion of the) State criteria and procedures would govern conformity determinations and the Federal conformity regulations contained in this part would apply only for the portion, if any, of the State's conformity provisions that is not approved by EPA. In addition, any previously applicable SIP requirements relating to conformity remain enforceable until the State revises its SIP to specifically remove them from the SIP and that revision is approved by EPA.

EFFECTIVE DATE NOTE: At 75 FR 17272, Apr. 5, 2010, § 93.151 was revised, effective July 6, 2010. For the convenience of the user, the revised text is set forth as follows:

§ 93.151 State implementation plan (SIP) revision.

The provisions and requirements of this subpart to demonstrate conformity required under section 176(c) of the Clean Air Act (CAA) apply to all Federal actions in designated nonattainment and maintenance areas where EPA has not approved the General Conformity SIP revision allowed under 40 CFR 51.851. When EPA approves a State's or Tribe's conformity provisions (or a portion thereof) in a revision to an applicable implementation plan, a conformity evaluation is governed by the approved (or approved portion of the) State or Tribe's criteria and procedures. The Federal conformity regulations contained in this subpart apply only for the portions, if any, of the part 93 requirements not contained in the State or Tribe conformity provisions approved by EPA. In addition, any previously applicable implementation plan conformity requirements remain enforceable until the EPA approves the revision to the applicable SIP to specifically include the revised requirements or remove requirements.

§ 93.152 Definitions.

Terms used but not defined in this part shall have the meaning given them by the Act and EPA's regulations (40 CFR chapter I), in that order of priority.

Affected Federal land manager means the Federal agency or the Federal official charged with direct responsibility for management of an area designated as Class I under the Act (42 U.S.C. 7472) that is located within 100 km of the proposed Federal action.

Applicable implementation plan or applicable SIP means the portion (or portions) of the SIP or most recent revision thereof, which has been approved under section 110 of the Act, or promulgated under section 110(c) of the Act (Federal implementation plan), or promulgated or approved pursuant to regulations promulgated under section 301(d) of the Act and which implements the relevant requirements of the Act.

Areawide air quality modeling analysis means an assessment on a scale that includes the entire nonattainment or maintenance area which uses an air quality dispersion model to determine the effects of emissions on air quality.

Cause or contribute to a new violation means a Federal action that:

(1) Causes a new violation of a national ambient air quality standard (NAAQS) at a location in a nonattainment or maintenance area which would otherwise not be in violation of the standard during the future period in question if the Federal action were not taken; or

(2) Contributes, in conjunction with other reasonably foreseeable actions, to a new violation of a NAAQS at a location in a nonattainment or maintenance area in a manner that would increase the frequency or severity of the new violation.

Caused by, as used in the terms ''direct emissions'' and ''indirect emissions,'' means emissions that would not otherwise occur in the absence of the Federal action.

Criteria pollutant or standard means any pollutant for which there is established a NAAQS at 40 CFR part 50.

Direct emissions means those emissions of a criteria pollutant or its precursors that are caused or initiated by the Federal action and occur at the same time and place as the action.

Emergency means a situation where extremely quick action on the part of the Federal agencies involved is needed and where the timing of such Federal activities makes it impractical to meet the requirements of this subpart, such as natural disasters like hurricanes or earthquakes, civil disturbances such as terrorist acts and military mobilizations.

Emissions budgets are those portions of the applicable SIP's projected emission inventories that describe the levels of emissions (mobile, stationary, area, etc.) that provide for meeting reasonable further progress milestones, attainment, and/or maintenance for any criteria pollutant or its precursors.

Emissions offsets, for purposes of § 93.158, are emissions reductions which are quantifiable, consistent with the applicable SIP attainment and reasonable further progress demonstrations, surplus to reductions required by, and credited to, other applicable SIP provisions, enforceable at both the State and Federal levels, and permanent within the timeframe specified by the program.

Emissions that a Federal agency has a continuing program responsibility for means emissions that are specifically caused by an agency carrying out its authorities, and does not include emissions that occur due to subsequent activities, unless such activities are required by the Federal agency. When an agency, in performing its normal program responsibilities, takes actions itself or imposes conditions that result in air pollutant emissions by a non-Federal entity taking subsequent actions, such emissions are covered by the meaning of a continuing program responsibility.

EPA means the Environmental Protection Agency.

Federal action means any activity engaged in by a department, agency, or instrumentality of the Federal government, or any activity that a department, agency or instrumentality of the Federal government supports in any way, provides financial assistance for, licenses, permits, or approves, other than activities related to transportation plans, programs, and projects developed, funded, or approved under title 23 U.S.C. or the Federal Transit Act (49 U.S.C. 1601 *et seq.*). Where the Federal action is a permit, license, or other approval for some aspect of a non-Federal undertaking, the relevant activity is the part, portion, or phase of the non-Federal undertaking that requires the Federal permit, license, or approval.

Federal agency means, for purposes of this subpart, a Federal department, agency, or instrumentality of the Federal government.

Increase the frequency or severity of any existing violation of any standard in any area means to cause a nonattainment area to exceed a standard more often or to cause a violation at a greater concentration than previously existed and/or would otherwise exist during the future period in question, if the project were not implemented.

Indirect emissions means those emissions of a criteria pollutant or its precursors that:

(1) Are caused by the Federal action, but may occur later in time and/or may be further removed in distance from the action itself but are still reasonably foreseeable; and

(2) The Federal agency can practicably control and will maintain control over due to a continuing program responsibility of the Federal agency.

Local air quality modeling analysis means an assessment of localized impacts on a scale smaller than the entire nonattainment or maintenance area, including, for example, congested roadway intersections and highways or transit terminals, which uses an air quality dispersion model to determine the effects of emissions on air quality.

Maintenance area means an area with a maintenance plan approved under section 175A of the Act.

Maintenance plan means a revision to the applicable SIP, meeting the requirements of section 175A of the Act.

Metropolitan Planning Organization (MPO) is that organization designated as being responsible, together with the State, for conducting the continuing, cooperative, and comprehensive planning process under 23 U.S.C. 134 and 49 U.S.C. 1607.

Milestone has the meaning given in sections 182(g)(1) and 189(c)(1) of the Act.

National ambient air quality standards (NAAQS) are those standards established pursuant to section 109 of the Act and include standards for carbon monoxide (CO), lead (Pb), nitrogen dioxide (NO_2), ozone, particulate matter (PM–10), and sulfur dioxide (SO_2).

NEPA is the National Environmental Policy Act of 1969, as amended (42 U.S.C. 4321 *et seq.*).

Nonattainment area means an area designated as nonattainment under section 107 of the Act and described in 40 CFR part 81.

Precursors of a criteria pollutant are:

(1) For ozone, nitrogen oxides (NOx), unless an area is exempted from NOx requirements under section 182(f) of the Act, and volatile organic compounds (VOC).

(2) For PM–10, those pollutants described in the PM–10 nonattainment area applicable SIP as significant contributors to the PM–10 levels.

(3) For $PM_{2.5}$:

(i) Sulfur dioxide (SO_2) in all $PM_{2.5}$ nonattainment and maintenance areas,

(ii) Nitrogen oxides in all $PM_{2.5}$ nonattainment and maintenance areas unless both the State and EPA determine that it is not a significant precursor, and

(iii) Volatile organic compounds (VOC) and ammonia (NH_3) only in $PM_{2.5}$ nonattainment or maintenance areas where either the State or EPA determines that they are significant precursors.

Reasonably foreseeable emissions are projected future indirect emissions that are identified at the time the conformity determination is made; the location of such emissions is known and the emissions are quantifiable, as described and documented by the Federal agency based on its own information and after reviewing any information presented to the Federal agency.

Regional water and/or wastewater projects include construction, operation, and maintenance of water or wastewater conveyances, water or wastewater treatment facilities, and water storage reservoirs which affect a large portion of a nonattainment or maintenance area.

Regionally significant action means a Federal action for which the direct and indirect emissions of any pollutant represent 10 percent or more of a nonattainment or maintenance area's emission inventory for that pollutant.

Total of direct and indirect emissions means the sum of direct and indirect emissions increases and decreases caused by the Federal action; i.e., the ''net'' emissions considering all direct and indirect emissions. The portion of emissions which are exempt or presumed to conform under § 93.153 (c), (d), (e), or (f) are not included in the ''total

of direct and indirect emissions.'' The ''total of direct and indirect emissions'' includes emissions of criteria pollutants and emissions of precursors of criteria pollutants.

[58 FR 63253, Nov. 30, 1993, as amended at 71 FR 40427, July 17, 2006]

EFFECTIVE DATE NOTE: At 75 FR 17272, Apr. 5, 2010, § 93.152 was amended by a. Adding in alphabetical order a definition for ''Applicability analysis.''; revising the definition of ''Applicable implementation plan or applicable SIP.''; revising the definition for ''Areawide air quality modeling analysis.''; adding the following definitions in alphabetical order: ''Confidential business information (CBI),'' ''Conformity determination,'' ''Conformity evaluation,'' ''Continuing program responsibility,'' and ''Continuous program to implement.''; revising the definition of ''Direct emissions.''; adding in alphabetical order a definition for ''Emission inventory.''; removing the definition for ''Emissions that a Federal agency has a continuing program responsibility for.''; revising the definition of ''EPA.'', ''Indirect Emissions.'', ''Local air quality modeling analysis.'', ''Maintenance area'' and ''Metropolitan Planning Organization (MPO).''; adding in alphabetical order a definition for ''Mitigation measure.''; revising the definition for ''National ambient air quality standards (NAAQS).''; in the definitions for ''Precursors of a criteria pollutant,'' revising paragraphs (3)(i), (3)(ii) and (3)(iii); revising the definition for ''Reasonably foreseeable emissions.''; removing the definition for ''Regionally significant action.''; adding the following definitions: ''Restricted information.''; adding in alphabetical order the definitions for ''Take or start the Federal action'' and ''Tribal implementation plan (TIP)'', effective July 6, 2010. For the convenience of the user, the added and revised text is set forth as follows:

§ 93.152 Definitions.

* * * * *

Applicability analysis is the process of determining if your Federal action must be supported by a conformity determination.

Applicable implementation plan or applicable SIP means the portion (or portions) of the SIP or most recent revision thereof, which has been approved under section 110(k) of the Act, a Federal implementation plan promulgated under section 110(c) of the Act, or a plan promulgated or approved pursuant to section 301 (d) of the Act (Tribal implementation plan or TIP) and which implements the relevant requirements of the Act.

Areawide air quality modeling analysis means an assessment on a scale that includes the entire nonattainment or maintenance area using an air quality dispersion model or photochemical grid model to determine the effects of emissions on air quality, for example, an assessment using EPA's community multi-scale air quality (CMAQ) modeling system.

* * * * *

Confidential business information (CBI) means information that has been determined by a Federal agency, in accordance with its applicable regulations, to be a trade secret, or commercial or financial information obtained from a person and privileged or confidential and is exempt from required disclosure under the Freedom of Information Act (5 U.S.C. 552(b)(4)).

Conformity determination is the evaluation (made after an applicability analysis is completed) that a Federal action conforms to the applicable implementation plan and meets the requirements of this subpart.

Conformity evaluation is the entire process from the applicability analysis through the conformity determination that is used to demonstrate that the Federal action conforms to the requirements of this subpart.

Continuing program responsibility means a Federal agency has responsibility for emissions caused by:

(1) Actions it takes itself; or

(2) Actions of non-Federal entities that the Federal agency, in exercising its normal programs and authorities, approves, funds, licenses or permits, provided the agency can impose conditions on any portion of the action that could affect the emissions.

Continuous program to implement means that the Federal agency has started the action identified in the plan and does not stop the actions for more than an 18-month period, unless it can demonstrate that such a stoppage was included in the original plan.

* * * * *

Direct emissions means those emissions of a criteria pollutant or its precursors that are caused or initiated by the Federal action and originate in a nonattainment or maintenance area and occur at the same time and place as the action and are reasonably foreseeable.

* * * * *

Emission inventory means a listing of information on the location, type of source, type and quantity of pollutant emitted as well as other parameters of the emissions.

* * * * *

EPA means the U.S. Environmental Protection Agency.

* * * * *

Indirect emissions means those emissions of a criteria pollutant or its precursors:

(1) That are caused or initiated by the Federal action and originate in the same nonattainment or maintenance area but occur at a different time or place as the action;

(2) That are reasonably foreseeable;

(3) That the agency can practically control; and

(4) For which the agency has continuing program responsibility.

For the purposes of this definition, even if a Federal licensing, rulemaking or other approving action is a required initial step for a subsequent activity that causes emissions, such initial steps do not mean that a Federal agency can practically control any resulting emissions.

Local air quality modeling analysis means an assessment of localized impacts on a scale smaller than the entire nonattainment or maintenance area, including, for example, congested roadways on a Federal facility, which uses an air quality dispersion model (*e.g.*, Industrial Source Complex Model or Emission and Dispersion Model System) to determine the effects of emissions on air quality.

Maintenance area means an area that was designated as nonattainment and has been re-designated in 40 CFR part 81 to attainment, meeting the provisions of section 107(d)(3)(E) of the Act and has a maintenance plan approved under section 175A of the Act.

* * * * *

Metropolitan Planning Organization (MPO) means the policy board of an organization created as a result of the designation process in 23 U.S.C. 134(d).

* * * * *

Mitigation measure means any method of reducing emissions of the pollutant or its precursor taken at the location of the Federal action and used to reduce the impact of the emissions of that pollutant caused by the action.

National ambient air quality standards (NAAQS) are those standards established pursuant to section 109 of the Act and include standards for carbon monoxide (CO_2), lead (Pb), nitrogen dioxide (NO_2), ozone, particulate matter (PM–10 and PM2.5), and sulfur dioxide (SO_2).

* * * * *

Precursors of a criteria pollutant are:

* * * * *

(3) * * *

(i) Sulfur dioxide (SO_2) in all PM2.5 nonattainment and maintenance areas,

(ii) Nitrogen oxides in all PM2.5 nonattainment and maintenance areas unless both the State and EPA determine that it is not a significant precursor, and

(iii) Volatile organic compounds (VOC) and ammonia (NH3) only in PM2.5 nonattainment or maintenance areas where either the State or EPA determines that they are significant precursors.

Reasonably foreseeable emissions are projected future direct and indirect emissions that are identified at the time the conformity determination is made; the location of such emissions is known and the emissions are quantifiable as described and documented by the Federal agency based on its own information and after reviewing any information presented to the Federal agency.

* * * * *

Restricted Information is information that is privileged or that is otherwise protected from disclosure pursuant to applicable statutes, Executive Orders, or regulations. Such information includes, but is not limited to: Classified national security information, protected critical infrastructure information, sensitive security information, and proprietary business information.

Take or start the Federal action means the date that the Federal agency signs or approves the permit, license, grant or contract or otherwise physically begins the Federal action that requires a conformity evaluation under this subpart.

* * * * *

Tribal implementation plan (TIP) means a plan to implement the national ambient air quality standards adopted and submitted by a federally recognized Indian tribal government determined to be eligible under 40 CFR 49.9 and the plan has been approved by EPA.

§ 93.153 Applicability.

(a) Conformity determinations for Federal actions related to transportation plans, programs, and projects developed, funded, or approved under title 23 U.S.C. or the Federal Transit Act (49 U.S.C. 1601 *et seq.*) must meet the procedures and criteria of 40 CFR part 51, subpart T, in lieu of the procedures set forth in this subpart.

(b) For Federal actions not covered by paragraph (a) of this section, a conformity determination is required for each criteria pollutant or precursor where the total of direct and indirect emissions of the criteria pollutant or precursor in a nonattainment or maintenance area caused by a Federal action would equal or exceed any of the rates in paragraphs (b)(1) or (2) of this section.

(1) For purposes of paragraph (b) of this section, the following rates apply in nonattainment areas (NAA's):

	Tons/ year
Ozone (VOC's or NO_X):	
Serious NAA's	50
Severe NAA's	25
Extreme NAA's	10
Other ozone NAA's outside an ozone transport region	100
Other ozone NAA's inside an ozone transport region:	
VOC	50
NO_X	100
Carbon monoxide: All NAA's	100
SO_2 or NO_2: All NAA's	100
PM–10:	
Moderate NAA's	100
Serious NAA's	70
$PM_{2.5}$:	
Direct emissions	100
SO_2	100
NO_X (unless determined not to be a significant precursor)	100
VOC or ammonia (if determined to be significant precursors)	100
Pb: All NAA's	25

(2) For purposes of paragraph (b) of this section, the following rates apply in maintenance areas:

	Tons/ year
Ozone (NO_X, SO_2 or NO_2):	
All Maintenance Areas	100
Ozone (VOC's):	
Maintenance areas inside an ozone transport region	50
Maintenance areas outside an ozone transport region	100
Carbon monoxide: All Maintenance Areas	100
PM–10: All Maintenance Areas	100
$PM_{2.5}$:	
Direct emissions	100
SO_2	100
NO_X (unless determined not to be a significant precursor)	100
VOC or ammonia (if determined to be significant precursors)	100
Pb: All Maintenance Areas	25

(c) The requirements of this subpart shall not apply to the following Federal actions:

(1) Actions where the total of direct and indirect emissions are below the emissions levels specified in paragraph (b) of this section.

(2) Actions which would result in no emissions increase or an increase in emissions that is clearly de minimis:

(i) Judicial and legislative proceedings.

(ii) Continuing and recurring activities such as permit renewals where activities conducted will be similar in scope and operation to activities currently being conducted.

(iii) Rulemaking and policy development and issuance.

(iv) Routine maintenance and repair activities, including repair and maintenance of administrative sites, roads, trails, and facilities.

(v) Civil and criminal enforcement activities, such as investigations, audits, inspections, examinations, prosecutions, and the training of law enforcement personnel.

(vi) Administrative actions such as personnel actions, organizational changes, debt management or collection, cash management, internal agency audits, program budget proposals, and matters relating to the administration and collection of taxes, duties and fees.

(vii) The routine, recurring transportation of materiel and personnel.

(viii) Routine movement of mobile assets, such as ships and aircraft, in home port reassignments and stations (when no new support facilities or personnel are required) to perform as operational groups and/or for repair or overhaul.

(ix) Maintenance dredging and debris disposal where no new depths are required, applicable permits are secured, and disposal will be at an approved disposal site.

(x) Actions, such as the following, with respect to existing structures, properties, facilities and lands where future activities conducted will be similar in scope and operation to activities currently being conducted at the existing structures, properties, facilities, and lands; for example, relocation of personnel, disposition of federally-owned existing structures, properties, facilities, and lands, rent subsidies, operation and maintenance cost

subsidies, the exercise of receivership or conservatorship authority, assistance in purchasing structures, and the production of coins and currency.

(xi) The granting of leases, licenses such as for exports and trade, permits, and easements where activities conducted will be similar in scope and operation to activities currently being conducted.

(xii) Planning, studies, and provision of technical assistance.

(xiii) Routine operation of facilities, mobile assets and equipment.

(xiv) Transfers of ownership, interests, and titles in land, facilities, and real and personal properties, regardless of the form or method of the transfer.

(xv) The designation of empowerment zones, enterprise communities, or viticultural areas.

(xvi) Actions by any of the Federal banking agencies or the Federal Reserve Banks, including actions regarding charters, applications, notices, licenses, the supervision or examination of depository institutions or depository institution holding companies, access to the discount window, or the provision of financial services to banking organizations or to any department, agency or instrumentality of the United States.

(xvii) Actions by the Board of Governors of the Federal Reserve System or any Federal Reserve Bank necessary to effect monetary or exchange rate policy.

(xviii) Actions that implement a foreign affairs function of the United States.

(xix) Actions (or portions thereof) associated with transfers of land, facilities, title, and real properties through an enforceable contract or lease agreement where the delivery of the deed is required to occur promptly after a specific, reasonable condition is met, such as promptly after the land is certified as meeting the requirements of CERCLA, and where the Federal agency does not retain continuing authority to control emissions associated with the lands, facilities, title, or real properties.

(xx) Transfers of real property, including land, facilities, and related personal property from a Federal entity to another Federal entity and assignments of real property, including land, facilities, and related personal property from a Federal entity to another Federal entity for subsequent deeding to eligible applicants.

(xxi) Actions by the Department of the Treasury to effect fiscal policy and to exercise the borrowing authority of the United States.

(3) Actions where the emissions are not reasonably foreseeable, such as the following:

(i) Initial Outer Continental Shelf lease sales which are made on a broad scale and are followed by exploration and development plans on a project level.

(ii) Electric power marketing activities that involve the acquisition, sale and transmission of electric energy.

(4) Actions which implement a decision to conduct or carry out a conforming program such as prescribed burning actions which are consistent with a conforming land management plan.

(d) Notwithstanding the other requirements of this subpart, a conformity determination is not required for the following Federal actions (or portion thereof):

(1) The portion of an action that includes major new or modified stationary sources that require a permit under the new source review (NSR) program (section 173 of the Act) or the prevention of significant deterioration program (title I, part C of the Act).

(2) Actions in response to emergencies or natural disasters such as hurricanes, earthquakes, etc., which are commenced on the order of hours or days after the emergency or disaster and, if applicable, which meet the requirements of paragraph (e) of this section.

(3) Research, investigations, studies, demonstrations, or training (other than those exempted under paragraph (c)(2) of this section), where no environmental detriment is incurred and/or, the particular action furthers air quality research, as determined by the State agency primarily responsible for the applicable SIP;

(4) Alteration and additions of existing structures as specifically required by new or existing applicable environmental legislation or environmental

regulations (e.g., hush houses for aircraft engines and scrubbers for air emissions).

(5) Direct emissions from remedial and removal actions carried out under the Comprehensive Environmental Response, Compensation and Liability Act and associated regulations to the extent such emissions either comply with the substantive requirements of the PSD/NSR permitting program or are exempted from other environmental regulation under the provisions of CERCLA and applicable regulations issued under CERCLA.

(e) Federal actions which are part of a continuing response to an emergency or disaster under paragraph (d)(2) of this section and which are to be taken more than 6 months after the commencement of the response to the emergency or disaster under paragraph (d)(2) of this section are exempt from the requirements of this subpart only if:

(1) The Federal agency taking the actions makes a written determination that, for a specified period not to exceed an additional 6 months, it is impractical to prepare the conformity analyses which would otherwise be required and the actions cannot be delayed due to overriding concerns for public health and welfare, national security interests and foreign policy commitments; or

(2) For actions which are to be taken after those actions covered by paragraph (e)(1) of this section, the Federal agency makes a new determination as provided in paragraph (e)(1) of this section.

(f) Notwithstanding other requirements of this subpart, actions specified by individual Federal agencies that have met the criteria set forth in either paragraph (g)(1) or (g)(2) of this section and the procedures set forth in paragraph (h) of this section are presumed to conform, except as provided in paragraph (j) of this section.

(g) The Federal agency must meet the criteria for establishing activities that are presumed to conform by fulfilling the requirements set forth in either paragraph (g)(1) or (g)(2) of this section:

(1) The Federal agency must clearly demonstrate using methods consistent with this subpart that the total of direct and indirect emissions from the type of activities which would be presumed to conform would not:

(i) Cause or contribute to any new violation of any standard in any area;

(ii) Interfere with provisions in the applicable SIP for maintenance of any standard;

(iii) Increase the frequency or severity of any existing violation of any standard in any area; or

(iv) Delay timely attainment of any standard or any required interim emission reductions or other milestones in any area including, where applicable, emission levels specified in the applicable SIP for purposes of:

(A) A demonstration of reasonable further progress;

(B) A demonstration of attainment; or

(C) A maintenance plan; or

(2) The Federal agency must provide documentation that the total of direct and indirect emissions from such future actions would be below the emission rates for a conformity determination that are established in paragraph (b) of this section, based, for example, on similar actions taken over recent years.

(h) In addition to meeting the criteria for establishing exemptions set forth in paragraphs (g)(1) or (g)(2) of this section, the following procedures must also be complied with to presume that activities will conform:

(1) The Federal agency must identify through publication in the FEDERAL REGISTER its list of proposed activities that are presumed to conform and the basis for the presumptions;

(2) The Federal agency must notify the appropriate EPA Regional Office(s), State and local air quality agencies and, where applicable, the agency designated under section 174 of the Act and the MPO and provide at least 30 days for the public to comment on the list of proposed activities presumed to conform;

(3) The Federal agency must document its response to all the comments received and make the comments, response, and final list of activities available to the public upon request; and

(4) The Federal agency must publish the final list of such activities in the FEDERAL REGISTER.

(i) Notwithstanding the other requirements of this subpart, when the total of direct and indirect emissions of any pollutant from a Federal action does not equal or exceed the rates specified in paragraph (b) of this section, but represents 10 percent or more of a nonattainment or maintenance area's total emissions of that pollutant, the action is defined as a regionally significant action and the requirements of §93.150 and §§93.155 through 93.160 shall apply for the Federal action.

(j) Where an action otherwise presumed to conform under paragraph (f) of this section is a regionally significant action or does not in fact meet one of the criteria in paragraph (g)(1) of this section, that action shall not be presumed to conform and the requirements of §93.150 and §§93.155 through 93.160 shall apply for the Federal action.

(k) The provisions of this subpart shall apply in all nonattainment and maintenance areas.

[58 FR 63253, Nov. 30, 1993, as amended at 71 FR 40427, July 17, 2006]

EFFECTIVE DATE NOTE: At 75 FR 17274, Apr. 5, 2010, §93.153 was amended by revising the table in paragraph (b)(1); adding paragraph (c)(2)(xxii); revising paragraphs (d)(1) and (d)(2); revising paragraph (e)(2); adding paragraph (e)(3); revising paragraph (f); revising paragraph (g) introductory text; adding paragraph (g)(3); revising paragraphs (h) introductory text, (h)(1), (h)(2), and (h)(4), (i), (j), and (k), effective July 6, 2010. For the convenience of the user, the added and revised text is set forth as follows:

§93.153 Applicability.

* * * * *

(b) * * *

(1) * * *

	Tons/year
Ozone (VOC's or NO_X):	
Serious NAA's	50
Severe NAA's	25
Extreme NAA's	10
Other ozone NAA's outside an ozone transport region	100
Other ozone NAA's inside an ozone transport region:	
VOC	50
NO_X	100
Carbon monoxide: All NAA's	100
SO_2 or NO_2: All NAA's	100
PM–10:	
Moderate NAA's	100
Serious NAA's	70
$PM_{2.5}$:	
Direct emissions	100
SO_2	100
NO_X (unless determined not to be significant precursors)	100
VOC or ammonia (if determined to be significant precursors)	100
Pb: All NAA's	25

* * * * *

(c) * * *

(2) * * *

(xxii) Air traffic control activities and adopting approach, departure, and enroute procedures for aircraft operations above the mixing height specified in the applicable SIP or TIP. Where the applicable SIP or TIP does not specify a mixing height, the Federal agency can use the 3,000 feet above ground level as a default mixing height, unless the agency demonstrates that use of a different mixing height is appropriate because the change in emissions at and above that height caused by the Federal action is *de minimis*.

* * * * *

(d) * * *

(1) The portion of an action that includes major or minor new or modified stationary sources that require a permit under the new source review (NSR) program (Section 110(a)(2)(c) and Section 173 of the Act) or the prevention of significant deterioration program (title I, part C of the Act).

(2) Actions in response to emergencies which are typically commenced on the order of hours or days after the emergency and, if applicable, which meet the requirements of paragraph (e) of this section.

* * * * *

(e) * * *

(2) For actions which are to be taken after those actions covered by paragraph (e)(1) of this section, the Federal agency makes a new determination as provided in paragraph (e)(1) of this section and:

(i) Provides a draft copy of the written determinations required to affected EPA Regional office(s), the affected State(s) and/or air pollution control agencies, and any Federal recognized Indian tribal government in the nonattainment or maintenance area. Those organizations must be allowed 15 days from the beginning of the extension period to comment on the draft determination; and

(ii) Within 30 days after making the determination, publish a notice of the determination by placing a prominent advertisement

in a daily newspaper of general circulation in the area affected by the action.

(3) If additional actions are necessary in response to an emergency or disaster under paragraph (d)(2) of this section beyond the specified time period in paragraph (e)(2) of this section, a Federal agency can make a new written determination as described in (e)(2) of this section for as many 6-month periods as needed, but in no case shall this exemption extend beyond three 6-month periods except where an agency:

(i) Provides information to EPA and the State or Tribe stating that the conditions that gave rise to the emergency exemption continue to exist and how such conditions effectively prevent the agency from conducting a conformity evaluation.

(ii) [Reserved]

(f) Notwithstanding other requirements of this subpart, actions specified by individual Federal agencies that have met the criteria set forth in either paragraphs (g)(1), (g)(2), or (g)(3) of this section and the procedures set forth in paragraph (h) of this section are ''presumed to conform,'' except as provided in paragraph (j) of this section. Actions specified by individual Federal agencies as ''presumed to conform'' may not be used in combination with one another when the total direct and indirect emissions from the combination of actions would equal or exceed any of the rates specified in paragraphs (b)(1) or (2) of this section.

(g) The Federal agency must meet the criteria for establishing activities that are ''presumed to conform'' by fulfilling the requirements set forth in either paragraphs (g)(1), (g)(2), or (g)(3) of this section:

* * * * *

(3) The Federal agency must clearly demonstrate that the emissions from the type or category of actions and the amount of emissions from the action are included in the applicable SIP and the State, local, or tribal air quality agencies responsible for the SIP(s) or TIP(s) provide written concurrence that the emissions from the actions along with all other expected emissions in the area will not exceed the emission budget in the SIP.

(h) In addition to meeting the criteria for establishing exemptions set forth in paragraphs (g)(1), (g)(2), or (g)(3) of this section, the following procedures must also be complied with to presume that activities will conform:

(1) The Federal agency must identify through publication in the FEDERAL REGISTER its list of proposed activities that are ''presumed to conform'' and the basis for the presumptions. The notice must clearly identify the type and size of the action that would be ''presumed to conform'' and provide criteria for determining if the type and size of action qualifies it for the presumption;

(2) The Federal agency must notify the appropriate EPA Regional Office(s), State, local, and tribal air quality agencies and, where applicable, the agency designated under section 174 of the Act and the MPO and provide at least 30 days for the public to comment on the list of proposed activities ''presumed to conform.'' If the ''presumed to conform'' action has regional or national application (*e.g.*, the action will cause emission increases in excess of the *de minimis* levels identified in paragraph (b) of this section in more than one of EPA's Regions), the Federal agency, as an alternative to sending it to EPA Regional Offices, can send the draft conformity determination to U.S. EPA, Office of Air Quality Planning and Standards;

* * * * *

(4) The Federal agency must publish the final list of such activities in the FEDERAL REGISTER.

(i) Emissions from the following actions are ''presumed to conform'':

(1) Actions at installations with facility-wide emission budgets meeting the requirements in § 93.161 provided that the State or Tribe has included the emission budget in the EPA-approved SIP and the emissions from the action along with all other emissions from the installation will not exceed the facility-wide emission budget.

(2) Prescribed fires conducted in accordance with a smoke management program (SMP) which meets the requirements of EPA's Interim Air Quality Policy on Wildland and Prescribed Fires or an equivalent replacement EPA policy.

(3) Emissions for actions that the State or Tribe identifies in the EPA-approved SIP or TIP as ''presumed to conform.''

(j) Even though an action would otherwise be ''presumed to conform'' under paragraph (f) or (i) of this section, an action shall not be ''presumed to conform'' and the requirements of § 93.150, § 93.151, §§ 93.154 through 93.160 and §§ 93.162 through 93.164 shall apply to the action if EPA or a third party shows that the action would:

(1) Cause or contribute to any new violation of any standard in any area;

(2) Interfere with provisions in the applicable SIP or TIP for maintenance of any standard;

(3) Increase the frequency or severity of any existing violation of any standard in any area; or

(4) Delay timely attainment of any standard or any required interim emissions reductions or other milestones in any area including, where applicable, emission levels specified in the applicable SIP or TIP for purposes of:

(i) A demonstration of reasonable further progress;

(ii) A demonstration of attainment; or

(iii) A maintenance plan.

(k) The provisions of this subpart shall apply in all nonattainment and maintenance areas except conformity requirements for newly designated nonattainment areas are not applicable until 1 year after the effective date of the final nonattainment designation for each NAAQS and pollutant in accordance with section 176(c)(6) of the Act.

§93.154 Conformity analysis.

Any Federal department, agency, or instrumentality of the Federal government taking an action subject to this subpart must make its own conformity determination consistent with the requirements of this subpart. In making its conformity determination, a Federal agency must consider comments from any interested parties. Where multiple Federal agencies have jurisdiction for various aspects of a project, a Federal agency may choose to adopt the analysis of another Federal agency or develop its own analysis in order to make its conformity determination.

EFFECTIVE DATE NOTE: At 75 FR 17275, Apr. 5, 2010, §93.154 was revised, effective July 6, 2010. For the convenience of the user, the revised text is set forth as follows:

§93.154 Federal agency conformity responsibility.

Any department, agency, or instrumentality of the Federal government taking an action subject to this subpart must make its own conformity determination consistent with the requirements of this subpart. In making its conformity determination, a Federal agency must follow the requirements in §§93.155 through 93.160 and §§93.162 through 93.165 and must consider comments from any interested parties. Where multiple Federal agencies have jurisdiction for various aspects of a project, a Federal agency may choose to adopt the analysis of another Federal agency or develop its own analysis in order to make its conformity determination.

§93.155 Reporting requirements.

(a) A Federal agency making a conformity determination under §93.158 must provide to the appropriate EPA Regional Office(s), State and local air quality agencies and, where applicable, affected Federal land managers, the agency designated under section 174 of the Act and the MPO a 30 day notice which describes the proposed action and the Federal agency's draft conformity determination on the action.

(b) A Federal agency must notify the appropriate EPA Regional Office(s), State and local air quality agencies and, where applicable, affected Federal land managers, the agency designated under section 174 of the Clean Air Act and the MPO within 30 days after making a final conformity determination under §93.158.

EFFECTIVE DATE NOTE: At 75 FR 17275, April 5, 2010, §93.155 was revised, effective July 6, 2010. For the convenience of the user, the revised text is set forth as follows:

§93.155 Reporting requirements.

(a) A Federal agency making a conformity determination under §§93.154 through 93.160 and §§93.162 through 93.164 must provide to the appropriate EPA Regional Office(s), State and local air quality agencies, any federally-recognized Indian tribal government in the nonattainment or maintenance area, and, where applicable, affected Federal land managers, the agency designated under section 174 of the Act and the MPO, a 30-day notice which describes the proposed action and the Federal agency's draft conformity determination on the action. If the action has multi-regional or national impacts (*e.g.*, the action will cause emission increases in excess of the *de minimis* levels identified in §93.153(b) in three or more of EPA's Regions), the Federal agency, as an alternative to sending it to EPA Regional Offices, can provide the notice to EPA's Office of Air Quality Planning and Standards.

(b) A Federal agency must notify the appropriate EPA Regional Office(s), State and local air quality agencies, any federally-recognized Indian tribal government in the nonattainment or maintenance area, and, where applicable, affected Federal land managers, the agency designated under section 174 of the Clean Air Act and the MPO, within 30 days after making a final conformity determination under this subpart.

(c) The draft and final conformity determination shall exclude any restricted information or confidential business information. The disclosure of restricted information and confidential business information shall be controlled by the applicable laws, regulations, security manuals, or executive orders concerning the use, access, and release of such materials. Subject to applicable procedures to protect restricted information from public disclosure, any information or materials excluded from the draft or final conformity determination or supporting materials may be made available in a restricted information annex to the determination for review by Federal and State representatives

who have received appropriate clearances to review the information.

§ 93.156 Public participation.

(a) Upon request by any person regarding a specific Federal action, a Federal agency must make available for review its draft conformity determination under § 93.158 with supporting materials which describe the analytical methods and conclusions relied upon in making the applicability analysis and draft conformity determination.

(b) A Federal agency must make public its draft conformity determination under § 93.158 by placing a notice by prominent advertisement in a daily newspaper of general circulation in the area affected by the action and by providing 30 days for written public comment prior to taking any formal action on the draft determination. This comment period may be concurrent with any other public involvement, such as occurs in the NEPA process.

(c) A Federal agency must document its response to all the comments received on its draft conformity determination under § 93.158 and make the comments and responses available, upon request by any person regarding a specific Federal action, within 30 days of the final conformity determination.

(d) A Federal agency must make public its final conformity determination under § 93.158 for a Federal action by placing a notice by prominent advertisement in a daily newspaper of general circulation in the area affected by the action within 30 days of the final conformity determination.

EFFECTIVE DATE NOTE: At 75 FR 17275, Apr. 5, 2010, § 93.156 was revised, effective July 6, 2010. For the convenience of the user, the revised text is set forth as follows:

§ 93.156 Public participation.

(a) Upon request by any person regarding a specific Federal action, a Federal agency must make available, subject to the limitation in paragraph (e) of this section, for review its draft conformity determination under § 93.154 with supporting materials which describe the analytical methods and conclusions relied upon in making the applicability analysis and draft conformity determination.

(b) A Federal agency must make public its draft conformity determination under § 93.154 by placing a notice by prominent advertisement in a daily newspaper of general circulation in the area affected by the action and by providing 30 days for written public comment prior to taking any formal action on the draft determination. This comment period may be concurrent with any other public involvement, such as occurs in the National Environmental Policy Act (NEPA) process. If the action has multi-regional or national impacts (*e.g.*, the action will cause emission increases in excess of the *de minimis* levels identified in § 93.153(b) in three or more of EPA's Regions), the Federal agency, as an alternative to publishing separate notices, can publish a notice in the FEDERAL REGISTER.

(c) A Federal agency must document its response to all the comments received on its draft conformity determination under § 93.154 and make the comments and responses available, subject to the limitation in paragraph (e) of this section, upon request by any person regarding a specific Federal action, within 30 days of the final conformity determination.

(d) A Federal agency must make public its final conformity determination under § 93.154 for a Federal action by placing a notice by prominent advertisement in a daily newspaper of general circulation in the area affected by the action within 30 days of the final conformity determination. If the action would have multi-regional or national impacts, the Federal agency, as an alternative, can publish the notice in the FEDERAL REGISTER.

(e) The draft and final conformity determination shall exclude any restricted information or confidential business information. The disclosure of restricted information and confidential business information shall be controlled by the applicable laws, regulations or executive orders concerning the release of such materials.

§ 93.157 Frequency of conformity determinations.

(a) The conformity status of a Federal action automatically lapses 5 years from the date a final conformity determination is reported under § 93.155, unless the Federal action has been completed or a continuous program has been commenced to implement that Federal action within a reasonable time.

(b) Ongoing Federal activities at a given site showing continuous progress are not new actions and do not require periodic redeterminations so long as such activities are within the scope of the final conformity determination reported under § 93.155.

(c) If, after the conformity determination is made, the Federal action is changed so that there is an increase in the total of direct and indirect emissions, above the levels in § 93.153(b), a new conformity determination is required.

EFFECTIVE DATE NOTE: At 75 FR 17276, Apr. 5, 2010, § 93.157 was revised, effective July 6, 2010. For the convenience of the user, the revised text is set forth as follows:

§ 93.157 Reevaluation of conformity.

(a) Once a conformity determination is completed by a Federal agency, that determination is not required to be re-evaluated if the agency has maintained a continuous program to implement the action; the determination has not lapsed as specified in paragraph (b) of this section; or any modification to the action does not result in an increase in emissions above the levels specified in § 93.153(b). If a conformity determination is not required for the action at the time NEPA analysis is completed, the date of the finding of no significant impact (FONSI) for an Environmental Assessment, a record of decision (ROD) for an Environmental Impact Statement, or a categorical exclusion determination can be used as a substitute date for the conformity determination date.

(b) The conformity status of a Federal action automatically lapses 5 years from the date a final conformity determination is reported under § 93.155, unless the Federal action has been completed or a continuous program to implement the Federal action has commenced.

(c) Ongoing Federal activities at a given site showing continuous progress are not new actions and do not require periodic re-determinations so long as such activities are within the scope of the final conformity determination reported under § 93.155.

(d) If the Federal agency originally determined through the applicability analysis that a conformity determination was not necessary because the emissions for the action were below the limits in § 93.153(b) and changes to the action would result in the total emissions from the action being above the limits in § 93.153(b), then the Federal agency must make a conformity determination.

§ 93.158 Criteria for determining conformity of general Federal actions.

(a) An action required under § 93.153 to have a conformity determination for a specific pollutant, will be determined to conform to the applicable SIP if, for each pollutant that exceeds the rates in § 93.153(b), or otherwise requires a conformity determination due to the total of direct and indirect emissions from the action, the action meets the requirements of paragraph (c) of this section, and meets any of the following requirements:

(1) For any criteria pollutant, the total of direct and indirect emissions from the action are specifically identified and accounted for in the applicable SIP's attainment or maintenance demonstration;

(2) For ozone or nitrogen dioxide, the total of direct and indirect emissions from the action are fully offset within the same nonattainment or maintenance area through a revision to the applicable SIP or a similarly enforceable measure that effects emission reductions so that there is no net increase in emissions of that pollutant;

(3) For any criteria pollutant, except ozone and nitrogen dioxide, the total of direct and indirect emissions from the action meet the requirements:

(i) Specified in paragraph (b) of this section, based on areawide air quality modeling analysis and local air quality modeling analysis; or

(ii) Meet the requirements of paragraph (a)(5) of this section and, for local air quality modeling analysis, the requirement of paragraph (b) of this section;

(4) For CO or PM–10—

(i) Where the State agency primarily responsible for the applicable SIP determines that an areawide air quality modeling analysis is not needed, the total of direct and indirect emissions from the action meet the requirements specified in paragraph (b) of this section, based on local air quality modeling analysis; or

(ii) Where the State agency primarily responsible for the applicable SIP determines that an areawide air quality modeling analysis is appropriate and that a local air quality modeling analysis is not needed, the total of direct and indirect emissions from the action meet the requirements specified in paragraph (b) of this section, based on areawide modeling, or meet the requirements of paragraph (a)(5) of this section; or

(5) For ozone or nitrogen dioxide, and for purposes of paragraphs (a)(3)(11) and (a)(4)(ii) of this section, each portion of the action or the action as a whole

meets any of the following requirements:

(i) Where EPA has approved a revision to an area's attainment or maintenance demonstration after 1990 and the State makes a determination as provided in paragraph (a)(5)(i)(A) of this section or where the State makes a commitment as provided in paragraph (a)(5)(i)(B) of this section:

(A) The total of direct and indirect emissions from the action (or portion thereof) is determined and documented by the State agency primarily responsible for the applicable SIP to result in a level of emissions which, together with all other emissions in the nonattainment (or maintenance) area, would not exceed the emissions budgets specified in the applicable SIP;

(B) The total of direct and indirect emissions from the action (or portion thereof) is determined by the State agency responsible for the applicable SIP to result in a level of emissions which, together with all other emissions in the nonattainment (or maintenance) area, would exceed an emissions budget specified in the applicable SIP and the State Governor or the Governor's designee for SIP actions makes a written commitment to EPA which includes the following:

(*1*) A specific schedule for adoption and submittal of a revision to the SIP which would achieve the needed emission reductions prior to the time emissions from the Federal action would occur;

(*2*) Identification of specific measures for incorporation into the SIP which would result in a level of emissions which, together with all other emissions in the nonattainment or maintenance area, would not exceed any emissions budget specified in the applicable SIP;

(*3*) A demonstration that all existing applicable SIP requirements are being implemented in the area for the pollutants affected by the Federal action, and that local authority to implement additional requirements has been fully pursued;

(*4*) A determination that the responsible Federal agencies have required all reasonable mitigation measures associated with their action; and

(*5*) Written documentation including all air quality analyses supporting the conformity determination;

(C) Where a Federal agency made a conformity determination based on a State commitment under paragraph (a)(5)(i)(B) of this section, such a State commitment is automatically deemed a call for a SIP revision by EPA under section 110(k)(5) of the Act, effective on the date of the Federal conformity determination and requiring response within 18 months or any shorter time within which the State commits to revise the applicable SIP;

(ii) The action (or portion thereof), as determined by the MPO, is specifically included in a current transportation plan and transportation improvement program which have been found to conform to the applicable SIP under 40 CFR part 51, subpart T, or 40 CFR part 93, subpart A;

(iii) The action (or portion thereof) fully offsets its emissions within the same nonattainment or maintenance area through a revision to the applicable SIP or an equally enforceable measure that effects emission reductions equal to or greater than the total of direct and indirect emissions from the action so that there is no net increase in emissions of that pollutant;

(iv) Where EPA has not approved a revision to the relevant SIP attainment or maintenance demonstration since 1990, the total of direct and indirect emissions from the action for the future years (described in § 93.159(d) do not increase emissions with respect to the baseline emissions:

(A) The baseline emissions reflect the historical activity levels that occurred in the geographic area affected by the proposed Federal action during:

(*1*) Calendar year 1990;

(*2*) The calendar year that is the basis for the classification (or, where the classification is based on multiple years, the most representative year), if a classification is promulgated in 40 CFR part 81; or

(*3*) The year of the baseline inventory in the PM–10 applicable SIP;

(B) The baseline emissions are the total of direct and indirect emissions calculated for the future years (described in § 93.159(d)) using the historic activity levels (described in paragraph

(a)(5)(iv)(A) of this section) and appropriate emission factors for the future years; or

(v) Where the action involves regional water and/or wastewater projects, such projects are sized to meet only the needs of population projections that are in the applicable SIP.

(b) The areawide and/or local air quality modeling analyses must:

(1) Meet the requirements in §93.159; and

(2) Show that the action does not:

(i) Cause or contribute to any new violation of any standard in any area; or

(ii) Increase the frequency or severity of any existing violation of any standard in any area.

(c) Notwithstanding any other requirements of this section, an action subject to this subpart may not be determined to conform to the applicable SIP unless the total of direct and indirect emissions from the action is in compliance or consistent with all relevant requirements and milestones contained in the applicable SIP, such as elements identified as part of the reasonable further progress schedules, assumptions specified in the attainment or maintenance demonstration, prohibitions, numerical emission limits, and work practice requirements.

(d) Any analyses required under this section must be completed, and any mitigation requirements necessary for a finding of conformity must be identified before the determination of conformity is made.

EFFECTIVE DATE NOTE: At 75 FR 17276, Apr. 5, 2010, §93.158 was amended by revising paragraphs (a)(1), (a)(2), (a)(3) introductory text and (a)(4) introductory text; revising paragraph (a)(5) introductory text; revising paragraphs (a)(5)(i) introductory text, and (a)(5)(i)(C); adding paragraph (a)(5)(i)(D), and revising paragraphs (a)(5)(iii), (a)(5)(iv) introductory text; (a)(5)(iv)(A)(*1*), (a)(5)(iv)(A)(*2*) and paragraph (a)(5)(iv)(B), effective July 6, 2010. For the convenience of the user, the added and revised text is set forth as follows:

§93.158 Criteria for determining conformity of general Federal actions.

(a) * * *

(1) For any criteria pollutant or precursor, the total of direct and indirect emissions from the action are specifically identified and accounted for in the applicable SIP's attainment or maintenance demonstration or reasonable further progress milestone or in a facility-wide emission budget included in a SIP in accordance with §93.161;

(2) For precursors of ozone, nitrogen dioxide, or PM, the total of direct and indirect emissions from the action are fully offset within the same nonattainment or maintenance area (or nearby area of equal or higher classification provided the emissions from that area contribute to the violations, or have contributed to violations in the past, in the area with the Federal action) through a revision to the applicable SIP or a similarly enforceable measure that effects emissions reductions so that there is no net increase in emissions of that pollutant;

(3) For any directly-emitted criteria pollutant, the total of direct and indirect emissions from the action meets the requirements:

* * * * *

(4) For CO or directly emitted PM—

* * * * *

(5) For ozone or nitrogen dioxide, and for purposes of paragraphs (a)(3)(ii) and (a)(4)(ii) of this section, each portion of the action or the action as a whole meets any of the following requirements:

(i) Where EPA has approved a revision to the applicable implementation plan after the area was designated as nonattainment and the State or Tribe makes a determination as provided in paragraph (a)(5)(i)(A) of this section or where the State or Tribe makes a commitment as provided in paragraph (a)(5)(i)(B) of this section:

* * * * *

(C) Where a Federal agency made a conformity determination based on a State's or Tribe's commitment under paragraph (a)(5)(i)(B) of this section and the State has submitted a SIP or TIP to EPA covering the time period during which the emissions will occur or is scheduled to submit such a SIP or TIP within 18 months of the conformity determination, the State commitment is automatically deemed a call for a SIP or TIP revision by EPA under section 110(k)(5) of the Act, effective on the date of the Federal conformity determination and requiring response within 18 months or any shorter time within which the State or Tribe commits to revise the applicable SIP;

(D) Where a Federal agency made a conformity determination based on a State or tribal commitment under paragraph (a)(5)(i)(B) of this section and the State or Tribe has not submitted a SIP covering the time period when the emissions will occur or is not scheduled to submit such a SIP within

18 months of the conformity determination, the State or Tribe must, within 18 months, submit to EPA a revision to the existing SIP committing to include the emissions in the future SIP revision.

* * * * *

(iii) The action (or portion thereof) fully offsets its emissions within the same nonattainment or maintenance area (or nearby area of equal or higher classification provided the emissions from that area contribute to the violations, or have contributed to violation in the past, in the area with the Federal action) through a revision to the applicable SIP or an equally enforceable measure that effects emissions reductions equal to or greater than the total of direct and indirect emissions from the action so that there is no net increase in emissions of that pollutant;

(iv) Where EPA has not approved a revision to the relevant SIP since the area was designated or reclassified, the total of direct and indirect emissions from the action for the future years (described in § 93.159(d)) do not increase emissions with respect to the baseline emissions:

(A) * * *

(*1*) The most current calendar year with a complete emission inventory available before an area is designated unless EPA sets another year; or

(*2*) The emission budget in the applicable SIP;

* * * * *

(B) The baseline emissions are the total of direct and indirect emissions calculated for the future years (described in § 93.159(d)) using the historic activity levels (described in paragraph (a)(5)(iv)(A) of this section) and appropriate emission factors for the future years; or

* * * * *

§ 93.159 Procedures for conformity determinations of general Federal actions.

(a) The analyses required under this subpart must be based on the latest planning assumptions.

(1) All planning assumptions must be derived from the estimates of population, employment, travel, and congestion most recently approved by the MPO, or other agency authorized to make such estimates, where available.

(2) Any revisions to these estimates used as part of the conformity determination, including projected shifts in geographic location or level of population, employment, travel, and congestion, must be approved by the MPO or other agency authorized to make such estimates for the urban area.

(b) The analyses required under this subpart must be based on the latest and most accurate emission estimation techniques available as described below, unless such techniques are inappropriate. If such techniques are inappropriate and written approval of the EPA Regional Administrator is obtained for any modification or substitution, they may be modified or another technique substituted on a case-by-case basis or, where appropriate, on a generic basis for a specific Federal agency program.

(1) For motor vehicle emissions, the most current version of the motor vehicle emissions model specified by EPA and available for use in the preparation or revision of SIPs in that State must be used for the conformity analysis as specified in paragraphs (b)(1)(i) and (ii) of this section:

(i) The EPA must publish in the FEDERAL REGISTER a notice of availability of any new motor vehicle emissions model; and

(ii) A grace period of 3 months shall apply during which the motor vehicle emissions model previously specified by EPA as the most current version may be used. Conformity analyses for which the analysis was begun during the grace period or no more than 3 years before the FEDERAL REGISTER notice of availability of the latest emission model may continue to use the previous version of the model specified by EPA.

(2) For non-motor vehicle sources, including stationary and area source emissions, the latest emission factors specified by EPA in the ''Compilation of Air Pollutant Emission Factors (AP–42)''[1] must be used for the conformity analysis unless more accurate emission data are available, such as actual stack test data from stationary sources which are part of the conformity analysis.

[1] Copies may be obtained from the Technical Support Division of OAQPS, EPA, MD–14, Research Triangle Park, NC 27711.

(c) The air quality modeling analyses required under this subpart must be based on the applicable air quality models, data bases, and other requirements specified in the most recent version of the ''Guideline on Air Quality Models (Revised)'' (1986), including supplements (EPA publication no. 450/2–78–027R)[2], unless:

(1) The guideline techniques are inappropriate, in which case the model may be modified or another model substituted on a case-by-case basis or, where appropriate, on a generic basis for a specific Federal agency program; and

(2) Written approval of the EPA Regional Administrator is obtained for any modification or substitution.

(d) The analyses required under this subpart, except § 93.158(a)(1), must be based on the total of direct and indirect emissions from the action and must reflect emission scenarios that are expected to occur under each of the following cases:

(1) The Act mandated attainment year or, if applicable, the farthest year for which emissions are projected in the maintenance plan;

(2) The year during which the total of direct and indirect emissions from the action is expected to be the greatest on an annual basis; and

(3) Any year for which the applicable SIP specifies an emissions budget.

EFFECTIVE DATE NOTE: At 75 FR 17277, Apr. 5, 2010, § 93.159 was amended by revising paragraphs (b) introductory text and (b)(1)(ii), paragraphs (b)(2) and (c) introductory text and paragraph (d), effective July 6, 2010. For the convenience of the user, the revised text is set forth as follows:

§ 93.159 Procedures for conformity determinations of general Federal actions.

* * * * *

(b) The analyses required under this subpart must be based on the latest and most accurate emission estimation techniques available as described below, unless such techniques are inappropriate. If such techniques are inappropriate, the Federal agency may obtain written approval from the appropriate EPA Regional Administrator for a modification or substitution, of another technique on a case-by-case basis or, where appropriate, on a generic basis for a specific Federal agency program.

(1) * * *

(ii) A grace period of 3 months shall apply during which the motor vehicle emissions model previously specified by EPA as the most current version may be used unless EPA announces a longer grace period in the FEDERAL REGISTER. Conformity analyses for which the analysis was begun during the grace period or no more than 3 months before the FEDERAL REGISTER notice of availability of the latest emission model may continue to use the previous version of the model specified by EPA.

(2) For non-motor vehicle sources, including stationary and area source emissions, the latest emission factors specified by EPA in the ''Compilation of Air Pollutant Emission Factors'' (AP–42, *http://www.epa.gov/ttn/chiefs/efpac*) must be used for the conformity analysis unless more accurate emission data are available, such as actual stack test data from the stationary sources which are part of the conformity analysis.

(c) The air quality modeling analyses required under this subpart must be based on the applicable air quality models, data bases, and other requirements specified in the most recent version of the ''Guideline on Air Quality Models.'' (Appendix W to 40 CFR part 51).

* * * * *

(d) The analyses required under this subpart must be based on the total of direct and indirect emissions from the action and must reflect emission scenarios that are expected to occur under each of the following cases:

(1) The attainment year specified in the SIP, or if the SIP does not specify an attainment year, the latest attainment year possible under the Act; or

(2) The last year for which emissions are projected in the maintenance plan;

(3) The year during which the total of direct and indirect emissions from the action is expected to be the greatest on an annual basis; and

(4) Any year for which the applicable SIP specifies an emissions budget.

§ 93.160 Mitigation of air quality impacts.

(a) Any measures that are intended to mitigate air quality impacts must be identified and the process for implementation and enforcement of such measures must be described, including an implementation schedule containing explicit timelines for implementation.

[2] See footnote 1 at § 93.159(b)(2).

(b) Prior to determining that a Federal action is in conformity, the Federal agency making the conformity determination must obtain written commitments from the appropriate persons or agencies to implement any mitigation measures which are identified as conditions for making conformity determinations.

(c) Persons or agencies voluntarily committing to mitigation measures to facilitate positive conformity determinations must comply with the obligations of such commitments.

(d) In instances where the Federal agency is licensing, permitting or otherwise approving the action of another governmental or private entity, approval by the Federal agency must be conditioned on the other entity meeting the mitigation measures set forth in the conformity determination.

(e) When necessary because of changed circumstances, mitigation measures may be modified so long as the new mitigation measures continue to support the conformity determination. Any proposed change in the mitigation measures is subject to the reporting requirements of § 93.156 and the public participation requirements of § 93.157.

(f) The implementation plan revision required in § 93.151 shall provide that written commitments to mitigation measures must be obtained prior to a positive conformity determination and that such commitments must be fulfilled.

(g) After a State revises its SIP to adopt its general conformity rules and EPA approves that SIP revision, any agreements, including mitigation measures, necessary for a conformity determination will be both State and federally enforceable. Enforceability through the applicable SIP will apply to all persons who agree to mitigate direct and indirect emissions associated with a Federal action for a conformity determination.

EFFECTIVE DATE NOTE: At 75 FR 17277, Apr. 5, 2010, § 93.160 was amended by revising paragraphs (e), (f), and (g), effective July 6, 2010. For the convenience of the user, the revised text is set forth as follows:

§ 93.160 Mitigation of air quality impacts.

* * * * *

(e) When necessary because of changed circumstances, mitigation measures may be modified so long as the new mitigation measures continue to support the conformity determination. Any proposed change in the mitigation measures is subject to the reporting requirements of § 93.156 and the public participation requirements of § 93.157.

(f) Written commitments to mitigation measures must be obtained prior to a positive conformity determination and such commitments must be fulfilled.

(g) After a State or Tribe revises its SIP or TIP and EPA approves that SIP revision, any agreements, including mitigation measures, necessary for a conformity determination will be both State or tribal and federally enforceable. Enforceability through the applicable SIP or TIP will apply to all persons who agree to mitigate direct and indirect emissions associated with a Federal action for a conformity determination.

§ 93.161 Conformity evaluation for Federal installations with facility-wide emission budgets.

(a) The State, local or tribal agency responsible for implementing and enforcing the SIP or TIP can in cooperation with Federal agencies or third parties authorized by the agency that operate installations subject to Federal oversight develop and adopt a facility-wide emission budget to be used for demonstrating conformity under § 93.158(a)(1). The facility-wide budget must meet the following criteria:

(1) Be for a set time period;

(2) Cover the pollutants or precursors of the pollutants for which the area is designated nonattainment or maintenance;

(3) Include specific quantities allowed to be emitted on an annual or seasonal basis;

(4) The emissions from the facility along with all other emissions in the area will not exceed the emission budget for the area;

(5) Include specific measures to ensure compliance with the budget, such as periodic reporting requirements or compliance demonstration, when the Federal agency is taking an action that would otherwise require a conformity determination;

(6) Be submitted to EPA as a SIP revision;

(7) The SIP revision must be approved by EPA.

(b) The facility-wide budget developed and adopted in accordance with paragraph (a) of this section can be revised by following the requirements in paragraph (a) of this section.

(c) Total direct and indirect emissions from Federal actions in conjunction with all other emissions subject to General Conformity from the facility that do not exceed the facility budget adopted pursuant to paragraph (a) of this section are ''presumed to conform'' to the SIP and do not require a conformity analysis.

(d) If the total direct and indirect emissions from the Federal actions in conjunction with the other emissions subject to General Conformity from the facility exceed the budget adopted pursuant to paragraph (a) of this section, the action must be evaluated for conformity. A Federal agency can use the compliance with the facility-wide emissions budget as part of the demonstration of conformity, *i.e.*, the agency would have to mitigate or offset the emissions that exceed the emission budget.

(e) If the SIP for the area includes a category for construction emissions, the negotiated budget can exempt construction emissions from further conformity analysis.

[75 FR 17277, Apr. 5, 2010]

EFFECTIVE DATE NOTE: At 75 FR 17277, Apr. 5, 2010, § 93.161 was added, effective July 6, 2010.

§ 93.162 Emissions beyond the time period covered by the SIP.

If a Federal action would result in total direct and indirect emissions above the applicable thresholds which would be emitted beyond the time period covered by the SIP, the Federal agency can:

(a) Demonstrate conformity with the last emission budget in the SIP; or

(b) Request the State or Tribe to adopt an emissions budget for the action for inclusion in the SIP. The State or Tribe must submit a SIP or TIP revision to EPA within 18 months either including the emissions in the existing SIP or establishing an enforceable commitment to include the emissions in future SIP revisions based on the latest planning assumptions at the time of the SIP revision. No such commitment by a State or Tribe shall restrict a State's or Tribe's ability to require RACT, RACM or any other control measures within the State's or Tribe's authority to ensure timely attainment of the NAAQS.

[75 FR 17278, Apr. 5, 2010]

EFFECTIVE DATE NOTE: At 75 FR 17278, Apr. 5, 2010, § 93.162 was added, effective July 6, 2010.

§ 93.163 Timing of offsets and mitigation measures.

(a) The emissions reductions from an offset or mitigation measure used to demonstrate conformity must occur during the same calendar year as the emission increases from the action except, as provided in paragraph (b) of this section.

(b) The State or Tribe may approve emissions reductions in other years provided:

(1) The reductions are greater than the emission increases by the following ratios:

(i) Extreme nonattainment areas	1.5:1
(ii) Severe nonattainment areas	1.3:1
(iii) Serious nonattainment areas	1.2:1
(iv) Moderate nonattainment areas	1.15:1
(v) All other areas	1.1:1

(2) The time period for completing the emissions reductions must not exceed twice the period of the emissions.

(3) The offset or mitigation measure with emissions reductions in another year will not:

(i) Cause or contribute to a new violation of any air quality standard,

(ii) Increase the frequency or severity of any existing violation of any air quality standard; or

(iii) Delay the timely attainment of any standard or any interim emissions reductions or other milestones in any area.

(c) The approval by the State or Tribe of an offset or mitigation measure with emissions reductions in another year does not relieve the State or Tribe of any obligation to meet any SIP or Clean Air Act milestone or

deadline. The approval of an alternate schedule for mitigation measures is at the discretion of the State or Tribe, and they are not required to approve an alternate schedule.

[75 FR 17278, Apr. 5, 2010]

EFFECTIVE DATE NOTE: At 75 FR 17278, Apr. 5, 2010, § 93.163 was added, effective July 6, 2010.

§ 93.164 Inter-precursor mitigation measures and offsets.

Federal agencies must reduce the same type of pollutant as being increased by the Federal action except the State or Tribe may approve offsets or mitigation measures of different precursors of the same criteria pollutant, if such trades are allowed by a State or Tribe in a SIP or TIP approved NSR regulation, is technically justified, and has a demonstrated environmental benefit.

[75 FR 17278, Apr. 5, 2010]

EFFECTIVE DATE NOTE: At 75 FR 17278, Apr. 5, 2010, § 93.164 was added, effective July 6, 2010.

§ 93.165 Early emission reduction credit programs at Federal facilities and installation subject to Federal oversight.

(a) Federal facilities and installations subject to Federal oversight can, with the approval of the State or tribal agency responsible for the SIP or TIP in that area, create an early emissions reductions credit program. The Federal agency can create the emission reduction credits in accordance with the requirements in paragraph (b) of this section and can use them in accordance with paragraph (c) of this section.

(b) Creation of emission reduction credits.

(1) Emissions reductions must be quantifiable through the use of standard emission factors or measurement techniques. If non-standard factors or techniques to quantify the emissions reductions are used, the Federal agency must receive approval from the State or tribal agency responsible for the implementation of the SIP or TIP and from EPA's Regional Office. The emission reduction credits do not have to be quantified before the reduction strategy is implemented, but must be quantified before the credits are used in the General Conformity evaluation.

(2) The emission reduction methods must be consistent with the applicable SIP or TIP attainment and reasonable further progress demonstrations.

(3) The emissions reductions cannot be required by or credited to other applicable SIP or TIP provisions.

(4) Both the State or Tribe and Federal air quality agencies must be able to take legal action to ensure continued implementation of the emission reduction strategy. In addition, private citizens must also be able to initiate action to ensure compliance with the control requirement.

(5) The emissions reductions must be permanent or the timeframe for the reductions must be specified.

(6) The Federal agency must document the emissions reductions and provide a copy of the document to the State or tribal air quality agency and the EPA regional office for review. The documentation must include a detailed description of the emission reduction strategy and a discussion of how it meets the requirements of paragraphs (b)(1) through (5) of this section.

(c) Use of emission reduction credits. The emission reduction credits created in accordance with paragraph (b) of this section can be used, subject to the following limitations, to reduce the emissions increase from a Federal action at the facility for the conformity evaluation.

(1) If the technique used to create the emission reduction is implemented at the same facility as the Federal action and could have occurred in conjunction with the Federal action, then the credits can be used to reduce the total direct and indirect emissions used to determine the applicability of the regulation as required in § 93.153 and as offsets or mitigation measures required by § 93.158.

(2) If the technique used to create the emission reduction is not implemented at the same facility as the Federal action or could not have occurred in conjunction with the Federal action, then the credits cannot be used to reduce the total direct and indirect emissions used to determine the applicability of the regulation as required in § 93.153,

but can be used to offset or mitigate the emissions as required by §93.158.

(3) Emissions reductions credits must be used in the same year in which they are generated.

(4) Once the emission reduction credits are used, they cannot be used as credits for another conformity evaluation. However, unused credits from a strategy used for one conformity evaluation can be used for another conformity evaluation as long as the reduction credits are not double counted.

(5) Federal agencies must notify the State or tribal air quality agency responsible for the implementation of the SIP or TIP and EPA Regional Office when the emission reduction credits are being used.

[75 FR 17278, Apr. 5, 2010]

EFFECTIVE DATE NOTE: At 75 FR 17278, Apr. 5, 2010, §93.165 was added, effective July 6, 2010.

PART 94—CONTROL OF EMISSIONS FROM MARINE COMPRESSION-IGNITION ENGINES

Subpart A—General Provisions for Emission Regulations for Compression-Ignition Marine Engines

Sec.
94.1 Applicability.
94.2 Definitions.
94.3 Abbreviations.
94.4 Treatment of confidential information.
94.5 Reference materials.
94.6 Regulatory structure.
94.7 General standards and requirements.
94.8 Exhaust emission standards.
94.9 Compliance with emission standards.
94.10 Warranty period.
94.11 Requirements for rebuilding certified engines.
94.12 Interim provisions.

Subpart B—Test Procedures

94.101 Applicability.
94.102 General provisions.
94.103 Test procedures for Category 1 marine engines.
94.104 Test procedures for Category 2 marine engines.
94.105 Duty cycles.
94.106 Supplemental test procedures for Category 1 and Category 2 marine engines.
94.107 Determination of maximum test speed.
94.108 Test fuels.
94.109 Test procedures for Category 3 marine engines.

Subpart C—Certification Provisions

94.201 Applicability.
94.202 Definitions.
94.203 Application for certification.
94.204 Designation of engine families.
94.205 Prohibited controls, adjustable parameters.
94.206 Required information.
94.207 Special test procedures.
94.208 Certification.
94.209 Special provisions for post-manufacture marinizers and small-volume manufacturers.
94.210 Amending the application and certificate of conformity.
94.211 Emission-related maintenance instructions for purchasers.
94.212 Labeling.
94.213 Submission of engine identification numbers.
94.214 Production engines.
94.215 Maintenance of records; submittal of information; right of entry.
94.216 Hearing procedures.
94.217 Emission data engine selection.
94.218 Deterioration factor determination.
94.219 Durability data engine selection.
94.220 Service accumulation.
94.221 Application of good engineering judgment.
94.222 Certification of engines on imported vessels.

Subpart D—Certification Averaging, Banking, and Trading Provisions

94.301 Applicability.
94.302 Definitions.
94.303 General provisions.
94.304 Compliance requirements.
94.305 Credit generation and use calculation.
94.306 Certification.
94.307 Labeling.
94.308 Maintenance of records.
94.309 Reports.
94.310 Notice of opportunity for hearing.

Subpart E—Emission-related Defect Reporting Requirements, Voluntary Emission Recall Program

94.401 Applicability.
94.402 Definitions.
94.403 Emission defect information report.
94.404 Voluntary emissions recall reporting.
94.405 Alternative report formats.
94.406 Reports filing: record retention.
94.407 Responsibility under other legal provisions preserved.
94.408 Disclaimer of production warranty applicability.

Subpart F—Manufacturer Production Line Testing Programs

94.501 Applicability.
94.502 Definitions.
94.503 General requirements.
94.504 Right of entry and access.
94.505 Sample selection for testing.
94.506 Test procedures.
94.507 Sequence of testing.
94.508 Calculation and reporting of test results.
94.509 Maintenance of records; submittal of information.
94.510 Compliance with criteria for production line testing.
94.511 [Reserved]
94.512 Suspension and revocation of certificates of conformity.
94.513 Request for public hearing.
94.514 Administrative procedures for public hearing.
94.515 Hearing procedures.
94.516 Appeal of hearing decision.
94.517 Treatment of confidential information.

Subpart G [Reserved]

Subpart H—Recall Regulations

94.701 Applicability.
94.702 Definitions.
94.703 Applicability of 40 CFR Part 85, Subpart S.

Subpart I—Importation of Nonconforming Engines

94.801 Applicability.
94.802 Definitions.
94.803 Admission.
94.804 Exemptions.
94.805 Prohibited acts; penalties.

Subpart J—Exclusion and Exemption Provisions

94.901 Purpose and applicability.
94.902 Definitions.
94.903 Exclusions.
94.904 Exemptions.
94.905 Testing exemption.
94.906 Manufacturer-owned exemption, display exemption, and competition exemption.
94.907 Engine dressing exemption.
94.908 National security exemption.
94.909 Export exemptions.
94.910 Granting of exemptions.
94.911 Submission of exemption requests.
94.912 Optional certification to land-based standards for auxiliary marine engines.
94.913 Staged-assembly exemption.
94.914 Emergency vessel exemption.

Subpart K—Requirements Applicable to Vessel Manufacturers, Owners, and Operators

94.1001 Applicability.
94.1002 Definitions.
94.1003 Production testing, in-use testing, and inspections.
94.1004 Maintenance, repair adjustment, and recordkeeping.

Subpart L—General Enforcement Provisions and Prohibited Acts

94.1101 Applicability.
94.1102 Definitions.
94.1103 Prohibited acts.
94.1104 General enforcement provisions.
94.1105 Injunction proceedings for prohibited acts.
94.1106 Penalties.
94.1107 Warranty provisions.
94.1108 In-use compliance provisions.
APPENDIX I TO PART 94—EMISSION-RELATED ENGINE PARAMETERS AND SPECIFICATIONS.

AUTHORITY: 42 U.S.C. 7401–7671q.

SOURCE: 64 FR 73331, Dec. 29, 1999, unless otherwise noted.

Subpart A—General Provisions for Emission Regulations for Compression-Ignition Marine Engines

§ 94.1 Applicability.

(a) Except as noted in paragraphs (b) and (c) of this section, the provisions of this part apply to manufacturers (including post-manufacture marinizers and dressers), rebuilders, owners and operators of:

(1) Marine engines that are compression-ignition engines manufactured (or that otherwise become new) on or after January 1, 2004;

(2) Marine vessels manufactured (or that otherwise become new) on or after January 1, 2004 and which include a compression-ignition marine engine.

(b) Notwithstanding the provisions of paragraph (c) of this section, the requirements and prohibitions of this part do not apply with respect to the engines identified in paragraphs (a)(1) and (2) of this section for any of the following engines:

(1) Marine engines with rated power below 37 kW.

(2) Marine engines on foreign vessels.

(3) Marine engines subject to the standards of 40 CFR part 1042, and marine engines that optionally certify (to the Tier 1 or Tier 2 standards) under the provisions of 40 CFR part 1042. Note that 40 CFR 1042.1 specifies that marine compression-ignition engines that are not certified under this part are subject to 40 CFR part 1042. Such engines may also be subject to the standards of this part 94.

(c) The provisions of Subpart L of this part apply to everyone with respect to the engines identified in paragraph (a) of this section.

(d) This part applies as specified in 40 CFR part 60, subpart IIII, to compression-ignition engines subject to the standards of 40 CFR part 60, subpart IIII.

[67 FR 68341, Nov. 8, 2002, as amended at 68 FR 9780, Feb. 28, 2003; 71 FR 39184, July 11, 2006; 73 FR 37196, June 30, 2008; 75 FR 22981, Apr. 30, 2010]

§94.2 Definitions.

(a) The definitions of this section apply to this subpart. They also apply to all subparts of this part, except where noted otherwise.

(b) As used in this part, all terms not defined in this section shall have the meaning given them in the Act:

Act means the Clean Air Act as amended (42 U.S.C. 7401 *et seq.*).

Adjustable Parameter means any device, system, or element of design which is physically or electronically capable of being adjusted (including those which are difficult to access) and which, if adjusted, may affect emissions or engine performance during emission testing.

Administrator means the Administrator of the Environmental Protection Agency or his/her authorized representative.

Aftertreatment system or *aftertreatment component* or *aftertreatment technology* means any system or component or technology mounted downstream of the exhaust valve or exhaust port whose design function is to reduce exhaust emissions.

Amphibious vehicle means a vehicle with wheels or tracks that is designed primarily for operation on land and secondarily for operation in water.

Annex VI Technical Code means the ''Technical Code on Control of Emission of Nitrogen Oxides from Marine Diesel Engines,'' adopted by the International Maritime Organization (incorporated by reference in §94.5).

Applicable standard means a standard to which an engine is subject; or, where an engine is certified to another standard or FEL, applicable standard means the other standard or FEL to which the engine is certified, as allowed by §94.8. This definition does not apply to subpart D of this part.

Auxiliary emission control device (AECD) means any element of design which senses temperature, vessel speed, engine RPM, atmospheric pressure, manifold pressure or vacuum, or any other parameter for the purpose of activating, modulating, delaying, or deactivating the operation of any part of the emission control system (including, but not limited to injection timing); or any other feature that causes in-use emissions to be higher than those measured under test conditions.

Averaging means the exchange of emission credits among engine families within a given manufacturer's product line.

Banking means the retention of emission credits by a credit holder for use in future calendar year averaging or trading as permitted by the regulations in this part.

Base engine means a land-based engine to be marinized, as configured prior to marinization.

Blue Sky Series engine means an engine meeting the requirements of §94.7(e).

Brake-specific fuel consumption means the mass of fuel consumed by an engine during a test segment divided by the brake-power output of the engine during that same test segment.

Calibration means the set of specifications, including tolerances, specific to a particular design, version, or application of a component, or components, or assembly capable of functionally describing its operation over its working range.

Category 1 means relating to a marine engine with a rated power greater than or equal to 37 kilowatts and a specific engine displacement less than 5.0 liters per cylinder.

Category 2 means relating to a marine engine with a specific engine displacement greater than or equal to 5.0 liters per cylinder but less than 30 liters per cylinder.

Category 3 means relating to a marine engine with a specific engine displacement greater than or equal to 30 liters per cylinder.

Commercial means relating to an engine or vessel that is not a recreational marine engine or a recreational vessel.

Compliance date means the date on which compliance with a standard becomes mandatory. For example, the compliance date for standards which first apply to the 2004 model year, is January 1, 2004.

Compression-ignition means relating to an engine that is not a spark-ignition engine.

Configuration means any subclassification of an engine family which can be described on the basis of gross power, emission control system, governed speed, injector size, engine calibration, and other parameters as designated by the Administrator.

Constant-speed engine means an engine that is governed to operate only at a single rated speed.

Crankcase emissions means airborne substances emitted to the atmosphere from any portion of the engine crankcase ventilation or engine lubrication system.

Defeat device means an AECD or other control feature that reduces the effectiveness of the emission control system under conditions which may reasonably be expected to be encountered in normal engine operation and use, unless the AECD or other control feature has been identified by the manufacturer in the application for certification, and:

(1) Such conditions are substantially represented by the portion of the applicable duty cycle of § 94.105 during which the applicable emission rates are measured;

(2) The need for the AECD or other control feature is justified in terms of protecting the engine or vessel against damage or accident; or

(3) The AECD or other control feature does not go beyond the requirements of engine starting.

Designated Officer means the Manager of the Engine Programs Group (6405–J), U.S. Environmental Protection Agency, 1200 Pennsylvania Ave., Washington, DC 20460.

Deterioration factor means the difference between exhaust emissions at the end of useful life and exhaust emissions at the low hour test point expressed as either: the ratio of exhaust emissions at the end of useful life to exhaust emissions at the low hour test point (for multiplicative deterioration factors); or the difference between exhaust emissions at the end of useful life and exhaust emissions at the low hour test point (for additive deterioration factors).

Diesel fuel means any fuel suitable for use in diesel engines which is commonly or commercially known or sold as diesel fuel or marine distillate fuel.

Dresser means any entity that modifies a land-based engine for use in a marine vessel, in compliance with the provisions of § 94.907. This means that dressers may not modify the engine in a way that would affect emissions.

Emission control system means those devices, systems or elements of design which control or reduce the emission of substances from an engine. This includes, but is not limited to, mechanical and electronic components and controls, and computer software.

Emission credits means the amount of emission reduction or exceedance, by an engine family, below or above the emission standard, respectively, as calculated under subpart D of this part. Emission reductions below the standard are considered as ''positive credits,'' while emission exceedances above the standard are considered as ''negative credits.'' In addition, ''projected credits'' refer to emission credits based on the projected applicable production/sales volume of the engine family. ''Reserved credits'' are emission credits generated within a calendar year waiting to be reported to EPA at the end of the calendar year. ''Actual credits'' refer to emission credits based on actual applicable production/sales volume as contained in the end-of-year reports submitted to EPA.

Emission-data engine means an engine which is tested for purposes of emission certification or production line testing.

Emission-related defect means a defect in design, materials, or workmanship in a device, system, or assembly which affects any parameter or specification enumerated in Appendix I of this part.

Emission-related maintenance means that maintenance which substantially affects emissions or which is likely to affect the deterioration of the engine or vessel with respect to emissions.

Engine family means a group of engine configurations that are expected to have similar emission characteristics throughout the useful lives of the engines (see §94.204), and that are (or were) covered (or requested to be covered) by a specific certificate of conformity.

Engineering analysis means a summary of scientific and/or engineering principles and facts that support a conclusion made by a manufacturer, with respect to compliance with the provisions of this part.

EPA Enforcement Officer means any officer or employee of the Environmental Protection Agency so designated in writing by the Administrator or his/her designee.

Exhaust emissions means substances (i.e., gases and particles) emitted to the atmosphere from any opening downstream from the exhaust port or exhaust valve of an engine.

Exhaust gas recirculation means an emission control technology that reduces emissions by routing gases that had been exhausted from the combustion chamber(s) back into the engine to be mixed with incoming air prior to or during combustion. The use of valve timing to increase the amount of residual exhaust gas in the combustion chamber(s) that is mixed with incoming air prior to or during combustion is not considered to be exhaust gas recirculation for the purposes of this part.

Family Emission Limit (FEL) means an emission level declared by the certifying manufacturer to serve in lieu of an otherwise applicable emission standard for certification and compliance purposes in the averaging, banking and trading program. FELs are expressed to the same number of decimal places as the applicable emission standard.

Foreign vessel means a vessel of foreign registry or a vessel operated under the authority of a country other than the United States.

Fuel system means the combination of fuel tank(s), fuel pump(s), fuel lines and filters, pressure regulator(s), and fuel injection components, fuel system vents, and any other component involved in the delivery of fuel to the engine.

Green Engine Factor means a factor that is applied to emission measurements from an engine that has had little or no service accumulation. The Green Engine Factor adjusts emission measurements to be equivalent to emission measurements from an engine that has had approximately 300 hours of use.

Hydrocarbon standard means an emission standard for total hydrocarbons, nonmethane hydrocarbons, or total hydrocarbon equivalent; or a combined emission standard for NO_X and total hydrocarbons, nonmethane hydrocarbons, or total hydrocarbon equivalent.

Identification number means a specification (for example, model number/serial number combination) which allows a particular engine to be distinguished from other similar engines.

Importer means an entity or person who imports engines from a foreign country into the United States (including its territories).

Intermediate Speed means peak torque speed if peak torque speed occurs from 60 to 75 percent of maximum test speed. If peak torque speed is less than 60 percent of maximum test speed, intermediate speed means 60 percent of maximum test speed. If peak torque speed is greater than 75 percent of maximum test speed, intermediate speed means 75 percent of maximum test speed.

Low hour engine means an engine during the interval between the time that normal assembly operations and adjustments are completed and the time that 300 additional operating hours have been accumulated (including hours of operation accumulated during emission testing, if performed).

Malfunction means a condition in which the operation of a component in an engine occurs in a manner other than that specified by the certifying manufacturer (e.g., as specified in the

application for certification); or the operation of an engine in that condition.

Manufacturer means any person engaged in the manufacturing or assembling of new engines or importing such engines for resale, or who acts for and is under the control of any such person in connection with the distribution of such engines. The term manufacturer includes post-manufacturer marinizers, but does not include any dealer with respect to new engines received by such person in commerce.

Manufacturer-owned engine means an uncertified marine engine that is owned and controlled by a manufacturer, is used for product development, and is not sold or leased.

Marine engine means a nonroad engine that is installed or intended to be installed on a marine vessel. This includes a portable auxiliary marine engine only if its fueling, cooling, or exhaust system is an integral part of the vessel. There are two kinds of marine engines:

(1) Propulsion marine engine means a marine engine that moves a vessel through the water or directs the vessel's movement.

(2) Auxiliary marine engine means a marine engine not used for propulsion.

Marine vessel has the meaning given in 1 U.S.C. 3, except that it does not include amphibious vehicles. The definition in 1 U.S.C. 3 very broadly includes every craft capable of being used as a means of transportation on water.

Maximum Test Power means:

(1) For Category 1 engines, the power output observed at the maximum test speed with the maximum fueling rate possible.

(2) For Category 2 engines, 90 percent of the power output observed at the maximum test speed with the maximum fueling rate possible.

Maximum test speed means the engine speed defined by § 94.107 to be the maximum engine speed to use during testing.

Maximum Test Torque means the torque output observed at the test speed with the maximum fueling rate possible at that speed.

Method of aspiration means the method whereby air for fuel combustion enters the engine (e.g., naturally aspirated or turbocharged).

Model year means the manufacturer's annual new model production period which includes January 1 of the calendar year, ends no later than December 31 of the calendar year, and does not begin earlier than January 2 of the previous calendar year. Where a manufacturer has no annual new model production period, model year means calendar year.

New marine engine means:

(1)(i) A marine engine, the equitable or legal title to which has never been transferred to an ultimate purchaser;

(ii) A marine engine installed on a vessel, the equitable or legal title to such vessel has never been transferred to an ultimate purchaser; or

(iii) A marine engine that has not been placed into service on a vessel.

(2) Where the equitable or legal title to an engine or vessel is not transferred to an ultimate purchaser prior to its being placed into service, the engine ceases to be new after it is placed into service.

(3) With respect to imported engines, the term ''new marine engine'' means an engine that is not covered by a certificate of conformity under this part at the time of importation, and that was manufactured after the starting date of the emission standards in this part which are applicable to such engine (or which would be applicable to such engine had it been manufactured for importation into the United States).

New vessel means:

(1)(i) A vessel, the equitable or legal title to which has never been transferred to an ultimate purchaser; or

(ii) For vessels with no Category 3 engines, a vessel that has been modified such that the value of the modifications exceeds 50 percent of the value of the modified vessel. The value of the modification is the difference in the assessed value of the vessel before the modification and the assessed value of the vessel after the modification. Use the following equation to determine if the fractional value of the modification exceeds 50 percent:

Percent of value = [(Value after modification) – (Value before modification)] × (100% ÷ (Value after modification)

(iii) For vessels with Category 3 engines, a vessel that has undergone a modification, which:

(A) Substantially alters the dimensions or carrying capacity of the vessel; or

(B) Changes the type of vessel; or

(C) Substantially prolongs the vessel's life.

(2) Where the equitable or legal title to a vessel is not transferred to an ultimate purchaser prior to its being placed into service, the vessel ceases to be new when it is placed into service.

Nonconforming marine engine means a marine engine which is not covered by a certificate of conformity prior to importation or being offered for importation (or for which such coverage has not been adequately demonstrated to EPA); or a marine engine which was originally covered by a certificate of conformity, but which is not in a certified configuration, or otherwise does not comply with the conditions of that certificate of conformity.

NOTE: This definition does not include domestic marine engines which are not covered by a certificate of conformity prior to their introduction into U.S. commerce; such engines are considered to be ''noncomplying marine engines.''

Nonroad means relating to nonroad engines, or vessels or equipment that include nonroad engines.

Nonroad engine has the meaning given in 40 CFR 1068.30. In general, this means all internal-combustion engines except motor vehicle engines, stationary engines, engines used solely for competition, or engines used in aircraft.

Oxides of nitrogen means nitric oxide and nitrogen dioxide. Oxides of nitrogen are expressed quantitatively as if the nitric oxide were in the form of nitrogen dioxide (oxides of nitrogen are assumed to have a molecular weight equivalent to nitrogen dioxide).

Passenger has the meaning given by 46 U.S.C. 2101 (21) and (21a). In the context of commercial vessels, this generally means that a passenger is a person that pays to be on the vessel.

Post-manufacture marinizer means an entity that produces a marine engine by modifying a non-marine engine, whether certified or uncertified, complete or partially complete, where such entity is not controlled by the manufacturer of the base engine or by an entity that also controls the manufacturer of the base engine. In addition, vessel manufacturers that substantially modify marine engines are post-manufacture marinizers. For the purpose of this definition, ''substantially modify'' means changing an engine in a way that could change engine emission characteristics.

Presentation of credentials means the display of the document designating a person as an EPA enforcement officer.

Primary fuel means that type of fuel (e.g., petroleum distillate diesel fuel) that is expected to be consumed in the greatest quantity (volume basis) when the engine is operated in use.

Recreational marine engine means a Category 1 propulsion marine engine that is intended by the manufacturer to be installed on a recreational vessel, and which is permanently labeled as follows:

''THIS ENGINE IS CATEGORIZED AS A RECREATIONAL MARINE ENGINE UNDER 40 CFR PART 94. INSTALLATION OF THIS ENGINE IN ANY NONRECREATIONAL VESSEL IS A VIOLATION OF FEDERAL LAW SUBJECT TO CIVIL PENALTY.''.

Recreational vessel has the meaning given in 46 U.S.C. 2101 (25), but excludes ''passenger vessels'' and ''small passenger vessels'' as defined by 46 U.S.C. 2101 (22) and (35) and excludes vessels used solely for competition. In general, for this part, ''recreational vessel'' means a vessel that is intended by the vessel manufacturer to be operated primarily for pleasure or leased, rented or chartered to another for the latter's pleasure, excluding the following vessels:

(1) Vessels of less than 100 gross tons that carry more than 6 passengers (as defined in this section).

(2) Vessels of 100 gross tons or more that carry one or more passengers (as defined in this section).

(3) Vessels used solely for competition.

Residual fuel means a petroleum product containing the heavier compounds

that remain after the distillate fuel oils (e.g., diesel fuel and marine distillate fuel) and lighter hydrocarbons are distilled away in refinery operations.

Round means to round numbers according to ASTM E29–02 (incorporated by reference in § 94.5), unless otherwise specified.

Service life means the total life of an engine. Service life begins when the engine is originally manufactured and continues until the engine is permanently removed from service.

Specific emissions means emissions expressed on the basis of observed brake power, using units of g/kW-hr. Observed brake power measurement includes accessories on the engine if these accessories are required for running an emission test (except for the cooling fan). When it is not possible to test the engine in the gross conditions, for example if the engine and transmission form a single integral unit, the engine may be tested in the net condition. Power corrections from net to gross conditions will be allowed with prior approval of the Administrator.

Small-volume boat builder means a boat manufacturer with fewer than 500 employees and with annual U.S.-directed production of fewer than 100 boats. For manufacturers owned by a parent company, these limits apply to the combined production and number of employees of the parent company and all its subsidiaries.

Small-volume manufacturer means a manufacturer with annual U.S.-directed production of fewer than 1,000 internal combustion engines (marine and nonmarine). For manufacturers owned by a parent company, the limit applies to the production of the parent company and all its subsidiaries.

Spark-ignition means relating to a gasoline-fueled engine or other engines with a spark plug (or other sparking device) and with operating characteristics significantly similar to the theoretical Otto combustion cycle. Spark-ignition engines usually use a throttle to regulate intake air flow to control power during normal operation.

Specified by a certificate of conformity or *specified in a certificate of conformity* means stated or otherwise specified in a certificate of conformity or an approved application for certification.

Test engine means an engine in a test sample.

Test sample means the collection of engines or vessels selected from the population of an engine family for emission testing.

Tier 1 means relating to an engine subject to the Tier 1 emission standards listed in § 94.8.

Tier 2 means relating to an engine subject to the Tier 2 emission standards listed in § 94.8.

Total Hydrocarbon Equivalent means the sum of the carbon mass contributions of non-oxygenated hydrocarbons, alcohols and aldehydes, or other organic compounds that are measured separately as contained in a gas sample, expressed as petroleum-fueled engine hydrocarbons. The hydrogen-to-carbon ratio of the equivalent hydrocarbon is 1.85:1.

Trading means the exchange of engine emission credits between credit holders.

Ultimate Purchaser means, with respect to any new engine or vessel, the first person who in good faith purchases such new engine or vessel for purposes other than resale.

United States means the States, the District of Columbia, the Commonwealth of Puerto Rico, the Commonwealth of the Northern Mariana Islands, Guam, American Samoa, and the U.S. Virgin Islands.

U.S.-directed production volume means the number of marine engine units, subject to this part, produced by a manufacturer for which the manufacturer has reasonable assurance that sale was or will be made to ultimate purchasers in the United States.

Useful life means the period during which an engine is designed to properly function in terms of reliability and fuel consumption, without being remanufactured, specified as hours of operation and years. It is the period during which a new engine is required to comply with all applicable emission standards. (Note: § 94.9(a) specifies minimum requirements for useful life values.)

Vessel means a marine vessel.

Vessel operator means any individual that physically operates or maintains a

vessel, or exercises managerial control over the operation of the vessel.

Vessel owner means the individual or company that holds legal title to a vessel.

Voluntary emission recall means a repair, adjustment, or modification program voluntarily initiated and conducted by a manufacturer to remedy any emission-related defect for which notification of engine or vessel owners has been provided.

[64 FR 73331, Dec. 29, 1999, as amended at 67 FR 68341, Nov. 8, 2002; 68 FR 9781, Feb. 28, 2003; 68 FR 54960, Sept. 19, 2003; 70 FR 40457, July 13, 2005; 73 FR 37196, June 30, 2008]

§94.3 Abbreviations.

The abbreviations of this section apply to all subparts of this part and have the following meanings:

AECD—Auxiliary emission control device.
API—American Petroleum Institute.
ASTM—American Society for Testing and Materials.
°C—Degrees Celsius.
CH_4—Methane.
CI—Compression ignition.
CO—Carbon monoxide.
CO_2—Carbon dioxide.
disp.—volumetric displacement of an engine cylinder.
EGR—Exhaust gas recirculation.
EP—End point.
EPA—Environmental Protection Agency.
FEL—Family emission limit.
ft—foot or feet.
FTP—Federal Test Procedure.
g—gram(s).
g/kW-hr—Grams per kilowatt hour.
gal—U.S. gallon.
h—hour(s).
HC—hydrocarbon.
Hg—Mercury.
hp—horsepower.
ICI—Independent Commercial Importer.
in—inch(es).
K—Kelvin.
kg—kilogram(s).
km—kilometer(s).
kPa—kilopascal(s).
kW—kilowatt.
L/cyl—liters per cylinder.
m—meter(s).
max—maximum.
mg—milligram(s).
min—minute.
ml—milliliter(s).
mm—millimeter.
NIST—National Institute for Standards and Testing.
NMHC—Non-methane hydrocarbons.
NTIS—National Technical Information Service.
NO—nitric oxide.
NO_2—nitrogen dioxide.
NO_X—oxides of nitrogen.
No.—number.
O_2—oxygen.
pct—percent.
PM—particulate matter.
PMM—post-manufacture marinizer.
ppm—parts per million by volume.
ppmC—parts per million, carbon.
rpm—revolutions per minute.
s—second(s).
SAE—Society of Automotive Engineers.
SEA—Selective Enforcement Auditing.
SI—International system of units (i.e., metric).
THC—Total hydrocarbon.
THCE—Total hydrocarbon equivalent.
U.S.—United States.
U.S.C.—United States Code.
vs—versus.
W—watt(s).
wt—weight.

[64 FR 73331, Dec. 29, 1999, as amended at 74 FR 56374, Oct. 30, 2009]

§94.4 Treatment of confidential information.

(a) Any manufacturer may assert that some or all of the information submitted pursuant to this part is entitled to confidential treatment as provided by 40 CFR part 2, subpart B.

(b) Any claim of confidentiality must accompany the information at the time it is submitted to EPA.

(c) To assert that information submitted pursuant to this part is confidential, a person or manufacturer must indicate clearly the items of information claimed confidential by marking, circling, bracketing, stamping, or otherwise specifying the confidential information. Furthermore, EPA requests, but does not require, that the submitter also provide a second copy of its submittal from which all confidential information has been deleted. If a need arises to publicly release nonconfidential information, EPA will assume that the submitter has accurately deleted the confidential information from this second copy.

(d) If a claim is made that some or all of the information submitted pursuant to this part is entitled to confidential treatment, the information covered by that confidentiality claim will be disclosed by EPA only to the extent and by means of the procedures set forth in 40 CFR part 2, subpart B.

(e) Information provided without a claim of confidentiality at the time of submission may be made available to the public by EPA without further notice to the submitter, in accordance with 40 CFR 2.204(c)(2)(i)(A).

§ 94.5 Reference materials.

We have incorporated by reference the documents listed in this section. The Director of the Federal Register approved the incorporation by reference as prescribed in 5 U.S.C. 552(a) and 1 CFR part 51. Anyone may inspect copies at the U.S. EPA, Air and Radiation Docket and Information Center, 1301 Constitution Ave., NW., Room B102, EPA West Building, Washington, DC 20460 or at the National Archives and Records Administration (NARA). For information on the availability of this material at NARA, call 202–741–6030, or go to: *http://www.archives.gov/federal_register/code_of_federal_regulations/ibr_locations.html.*

(a) *ASTM material.* Table 1 of § 94.5 lists material from the American Society for Testing and Materials that we have incorporated by reference. The first column lists the number and name of the material. The second column lists the sections of this part where we reference it. Anyone may purchase copies of these materials from the American Society for Testing and Materials, 100 Barr Harbor Dr., PO Box C700, West Conshohocken, PA 19428. Table 1 follows:

TABLE 1 OF § 94.5—ASTM MATERIALS

Document No. and name	Part 94 reference
ASTM D 86–01, Standard Test Method for Distillation of Petroleum Products at Atmospheric Pressure.	94.108
ASTM D 93–02, Standard Test Methods for Flash-Point by Pensky-Martens Closed Cup Tester.	94.108
ASTM D 129–00, Standard Test Method for Sulfur in Petroleum Products (General Bomb Method).	94.108
ASTM D 287–92 (Reapproved 2000), Standard Test Method for API Gravity of Crude Petroleum and Petroleum Products (Hydrometer Method).	94.108
ASTM D 445–01, Standard Test Method for Kinematic Viscosity of Transparent and Opaque Liquids (the Calculation of Dynamic Viscosity).	94.108
ASTM D 613–01, Standard Test Method for Cetane Number of Diesel Fuel Oil	94.108
ASTM D 1319–02a, Standard Test Method for Hydrocarbon Types in Liquid Petroleum Products by Fluorescent Indicator Adsorption.	94.108
ASTM D 2622–98, Standard Test Method for Sulfur in Petroleum Products by Wavelength Dispersive X-ray Fluorescence Spectrometry.	94.108
ASTM D 5186–99, Standard Test Method for Determination of the Aromatic Content and Polynuclear Aromatic Content of Diesel Fuels and Aviation Turbine Fuels by Supercritical Fluid Chromatography.	94.108
ASTM E 29–02, Standard Practice for Using Significant Digits in Test Data to Determine Conformance with Specifications.	94.2

(b) *ISO material.* Table 2 of § 94.5 lists material from the International Organization for Standardization that we have incorporated by reference. The first column lists the number and name of the material. The second column lists the section of this part where we reference it. Anyone may purchase copies of these materials from the International Organization for Standardization, Case Postale 56, CH–1211 Geneva 20, Switzerland.

Table 2 follows:

TABLE 2 OF § 94.5—ISO MATERIALS

Document No. and name	40 CFR part 94 reference
ISO 8178–1, Reciprocating internal combustion engines—Exhaust emission measurement—Part 1: Test-bed measurement of gaseous and particulate exhaust emissions, 1996.	94.109

(c) *IMO material.* Table 3 of § 94.5 lists material from the International Maritime Organization that we have incorporated by reference. The first column

lists the number and name of the material. The second column lists the section of this part where we reference it. Anyone may purchase copies of these materials from the International Maritime Organization, 4 Albert Embankment, London SE1 7SR, United Kingdom.

Table 3 follows:

TABLE 3 OF §94.5—IMO MATERIALS

Document No. and name	40 CFR part 94 reference
Resolution 2—Technical Code on Control of Emission of Nitrogen Oxides from Marine Diesel Engines, 1997.	94.2, 94.11, 94.108, 94.109, 94.204, 94.211, 94.1004.

[68 FR 9781, Feb. 28, 2003]

§94.6 Regulatory structure.

This section provides an overview of the regulatory structure of this part.

(a) The regulations of this Part 94 are intended to control emissions from in-use marine engines.

(b) The engines for which the regulations of this part (i.e., 40 CFR part 94) apply are specified by §94.1, and by the definitions of §94.2. The point at which an engine or vessel becomes subject to the regulations of this part is determined by the definitions of new marine engine and new marine vessel in §94.2. Subpart J of this part contains provisions exempting certain engines and vessels from the emission standards in this part under special circumstances.

(c) To comply with the requirements of this part, a manufacturer must demonstrate to EPA that the engine meets the applicable standards of §§94.7 and 94.8, and all other requirements of this part. The requirements of this certification process are described in subparts C and D of this part.

(d) Subpart B of this part specifies procedures and equipment to be used for conducting emission tests for the purpose of the regulations of this part.

(e) Subparts E, F, and H of this part specify requirements for manufacturers after certification; that is during production and use of the engines.

(f) Subpart I of this part contains requirements applicable to the importation of marine engines covered by the provisions of this part.

(g) Subpart L of this part describes prohibited acts and contains other enforcement provisions relating to marine engines and vessels covered by the provisions of this part.

(h) Unless specified otherwise, the provisions of this part apply to all marine engines and vessels subject to the emission standards of this part.

§94.7 General standards and requirements.

(a) Marine engines and vessels may not be equipped with a defeat device.

(b) An engine may not be equipped with an emission control system for the purpose of complying with emission standards if such a system will cause or contribute to an unreasonable risk to public health, welfare, or safety in its operation or function.

(c) You may not design your engines with emission-control devices, systems, or elements of design that cause or contribute to an unreasonable risk to public health, welfare, or safety while operating. For example, this would apply if the engine emits a noxious or toxic substance it would otherwise not emit that contributes to such an unreasonable risk.

(d) Manufacturers shall ensure that all engines subject to the emission standards of this part are equipped with a connection in the engine exhaust system that is located downstream of the engine and before any point at which the exhaust contacts water (or any other cooling/scrubbing medium) for the temporary attachment of gaseous and/or particulate emission sampling equipment. Use good engineering judgment to locate the connection. This connection shall be internally threaded with standard pipe threads of a size not larger than one-half inch, and shall be closed by a pipe-

plug when not in use. Equivalent connections are allowed. Engine manufacturers may comply with this requirement by providing vessel manufacturers with clear instructions explaining how to meet this requirement, and noting in the instructions that failure to comply may subject the vessel manufacturer to federal penalties. Vessel manufacturers are required to comply with the engine manufacturer's instructions.

(e) Electronically controlled engines subject to the emission standards of this part shall broadcast on engine's controller area networks engine torque (as percent of maximum torque at that speed) and engine speed.

[64 FR 73331, Dec. 29, 1999, as amended at 67 FR 68341, Nov. 8, 2002; 68 FR 9782, Feb. 28, 2003]

§ 94.8 Exhaust emission standards.

(a) The Tier 1 standards of paragraph (a)(1) of this section apply until replaced by the standards of paragraph (a)(2) of this section.

(1) *Tier 1 standards.* NO_X emissions from model year 2004 and later engines with displacement of 2.5 or more liters per cylinder may not exceed the following values:

(i) 17.0 g/kW-hr when maximum test speed is less than 130 rpm.

(ii) $45.0 \times N^{-0.20}$ when maximum test speed is at least 130 but less than 2000 rpm, where N is the maximum test speed of the engine in revolutions per minute.

(NOTE: Round speed-dependent standards to the nearest 0.1 g/kW-hr.)

(iii) 9.8 g/kW-hr when maximum test speed is 2000 rpm or more.

(2) *Tier 2 standards.* (i) Exhaust emissions from marine compression-ignition engines shall not exceed the applicable Tier 2 exhaust emission standards contained in Table A–1 as follows:

TABLE A–1—PRIMARY TIER 2 EXHAUST EMISSION STANDARDS (G/KW-HR)

Engine Size liters/cylinder, rated power	Category	Model year [a]	THC+NO_X g/kW-hr	CO g/kW-hr	PM g/kW-hr
disp. <0.9 and power ≥37 kW ..	Category 1, Commercial	2005	7.5	5.0	0.40
	Category 1, Recreational	2007	7.5	5.0	0.40
0.9 ≤ disp. <1.2 all power levels.	Category 1, Commercial	2004	7.2	5.0	0.30
	Category 1, Recreational	2006	7.2	5.0	0.30
1.2 ≤ disp. <2.5 all power levels.	Category 1, Commercial	2004	7.2	5.0	0.20
	Category 1, Recreational	2006	7.2	5.0	0.20
2.5 ≤ disp. <5.0 all power levels.	Category 1, Commercial	2007	7.2	5.0	0.20
	Category 1, Recreational	2009	7.2	5.0	0.20
5.0 ≤ disp. <15.0 all power levels.	Category 2	2007	7.8	5.0	0.27
15.0 ≤ disp. <20.0 power <3300 kW.	Category 2	2007	8.7	5.0	0.50
15.0 ≤ disp. <20.0 power ≥3300 kW.	Category 2	2007	9.8	5.0	0.50
20.0 ≤ disp. <25.0 all power levels.	Category 2	2007	9.8	5.0	0.50
25.0 ≤ disp. <30.0 all power levels.	Category 2	2007	11.0	5.0	0.50
disp. ≥30.0 all power levels	Category 3	See paragraph (a)(2)(ii) of this section			

[a] The model years listed indicate the model years for which the specified standards start.

(ii) EPA has not finalized Tier 2 standards for Category 3 engines. EPA will promulgate final Tier 2 standards for Category 3 engines on or before December 17, 2009.

(b) Exhaust emissions of oxides of nitrogen, carbon monoxide, hydrocarbon, and particulate matter (and other compounds, as applicable) shall be measured using the procedures set forth in subpart B of this part.

(c) In lieu of the THC+NO_X standards, and PM standards specified in paragraph (a) of this section, manufacturers may elect to include engine families in the averaging, banking, and trading program, the provisions of which are specified in subpart D of this

part. The manufacturer shall then set a family emission limit (FEL) which will serve as the standard for that engine family. The ABT provisions of subpart D of this part do not apply for Category 3 engines.

(d)(1) Naturally aspirated engines subject to the standards of this section shall not discharge crankcase emissions into the ambient atmosphere.

(2) For engines using turbochargers, pumps, blowers, or superchargers for air induction, if the engine discharges crankcase emissions into the ambient atmosphere in use, these crankcase emissions shall be included in all exhaust emission measurements. This requirement applies only for engines subject to hydrocarbon standards (*e.g.*, THC standards, NMHC standards, or THC+NO_X standards).

(3) The crankcase requirements of this paragraph (d) do not apply for Tier 1 engines.

(e) Exhaust emissions from Category 1 and Category 2 propulsion engines subject to the standards (or FELs) in paragraph (a), (c), or (f) of this section shall not exceed:

(1) *Commercial marine engines.* (i) 1.20 times the applicable standards (or FELs) when tested in accordance with the supplemental test procedures specified in §94.106 at loads greater than or equal to 45 percent of the maximum power at rated speed or 1.50 times the applicable standards (or FELs) at loads less than 45 percent of the maximum power at rated speed.

(ii) As an option, the manufacturer may choose to comply with limits of 1.25 times the applicable standards (or FELs) when tested over the whole power range in accordance with the supplemental test procedures specified in §94.106, instead of the limits in paragraph (e)(1)(i) of this section.

(2) *Recreational marine engines.* (i) 1.20 times the applicable standards (or FELs) when tested in accordance with the supplemental test procedures specified in §94.106 at loads greater than or equal to 45 percent of the maximum power at rated speed and speeds less than 95 percent of maximum test speed, or 1.50 times the applicable standards (or FELs) at loads less than 45 percent of the maximum power at rated speed, or 1.50 times the applicable standards (or FELs) at any loads for speeds greater than or equal to 95 percent of the maximum test speed.

(ii) As an option, the manufacturer may choose to comply with limits of 1.25 times the applicable standards (or FELs) when tested over the whole power range in accordance with the supplemental test procedures specified in §94.106, instead of the limits in paragraph (e)(2)(i) of this section.

(f) The following define the requirements for low-emitting Blue Sky Series engines:

(1) *Voluntary standards.* (i) Category 1 and Category 2 engines may be designated ''Blue Sky Series'' engines by meeting the voluntary standards listed in Table A–2, which apply to all certification and in-use testing:

TABLE A–2—VOLUNTARY EMISSION STANDARDS [G/KW-HR]

Rated brake power (kW)	THC+NO_X	PM
Power ≥ 37 kW, and displ. < 0.9	4.0	0.24
0.9 ≤ displ. < 1.2	4.0	0.18
1.2 ≤ displ. < 2.5	4.0	0.12
2.5 ≤ displ. < 5	5.0	0.12
5 ≤ displ. < 15	5.0	0.16
15 ≤ disp. < 20, and power < 3300 kW	5.2	0.30
15 ≤ disp. < 20, and power ≥ 3300 kW	5.9	0.30
20 ≤ disp. < 25	5.9	0.30
25 ≤ disp. < 30	6.6	0.30

(ii) Category 3 engines may be designated ''Blue Sky Series'' engines by meeting these voluntary standards that would apply to all certification and in-use testing:

(A) A NO_X standard of $9.0 \times N^{-0.20}$ where N = the maximum test speed of the engine in revolutions per minute (or 4.8 g/kW-hr for engines with maximum test speeds less than 130 rpm).

(NOTE: Round speed-dependent standards to the nearest 0.1 g/kW-hr.)

(B) An HC standard of 0.4 g/kW-hr.

(C) A CO standard of 3.0 g/kW-hr.

(2) *Additional standards.* Blue Sky Series engines are subject to all provisions that would otherwise apply under this part.

(3) *Test procedures.* Manufacturers may use an alternate procedure to demonstrate the desired level of emission control if approved in advance by the Administrator.

(g) Standards for alternative fuels. The standards described in this section apply to compression-ignition engines, irrespective of fuel, with the following two exceptions for Category 1 and Category 2 engines:

(1) Engines fueled with natural gas shall comply with NMHC+NO_X standards that are numerically equivalent to the THC+NO_X described in paragraph (a) of this section; and

(2) Engines fueled with alcohol fuel shall comply with THCE+NO_X standards that are numerically equivalent to the THC+NO_X described in paragraph (a) of this section.

[64 FR 73331, Dec. 29, 1999, as amended at 67 FR 68342, Nov. 8, 2002; 68 FR 9782, Feb. 28, 2003; 68 FR 54960, Sept. 19, 2003; 72 FR 68525, Dec. 5, 2007]

§ 94.9 Compliance with emission standards.

(a) The general standards and requirements in § 94.7 and the emission standards in § 94.8 apply to each new engine throughout its useful life period. The useful life is specified both in years and in hours of operation, and ends when either of the values (hours of operation or years) is exceeded.

(1) The minimum useful life is:

(i) 10 years or 1,000 hours of operation for recreational Category 1 engines.

(ii) 10 years or 10,000 hours of operation for commercial Category 1 engines.

(iii) 10 years or 20,000 hours of operation for Category 2 engines.

(iv) 3 years or 10,000 hours of operation for Category 3 engines.

(2) The manufacturer shall specify a longer useful life if the engine is designed to remain in service longer than the applicable minimum useful life without being rebuilt. A manufacturer's recommended time to remanufacture/rebuild longer than the minimum useful life is one indicator of a longer design life.

(3) Manufacturers may request in the application for certification that we approve a shorter useful life for an engine family. We may approve a shorter useful life, in hours of engine operation but not in years, if we determine that these engines will rarely operate longer than the shorter useful life. If engines identical to those in the engine family have already been produced and are in use, the demonstration must include documentation from such in-use engines. In other cases, the demonstration must include an engineering analysis of information equivalent to such in-use data, such as data from research engines or similar engine models that are already in production. The demonstration must also include recommended overhaul intervals, any mechanical warranty offered for the engine or its components, and any relevant customer design specifications. The demonstration may include any other relevant information. The useful life value may not be shorter than any of the following:

(i) 1,000 hours of operation.

(ii) The recommended overhaul interval.

(iii) The mechanical warranty for the engine.

(b) Certification is the process by which manufacturers apply for and obtain certificates of conformity from EPA, which allows the manufacturer to introduce into commerce new marine engines for sale or use in the U.S.

(1) Compliance with the applicable emission standards by an engine family shall be demonstrated by the certifying manufacturer before a certificate of conformity may be issued under § 94.208. Manufacturers shall demonstrate compliance using emission data, measured using the procedures specified in Subpart B of this part, from a low hour engine. A development engine that is equivalent in design to the marine engines being certified may be used for Category 2 or Category 3 certification.

(2) The emission values to compare with the standards shall be the emission values of a low hour engine, or a

development engine, adjusted by the deterioration factors developed in accordance with the provisions of §94.219. Before comparing any emission value with the standard, round it to the same number of significant figures contained in the applicable standard.

(c) Upon request by the manufacturer, the Administrator may limit the applicability of exhaust emission requirements of §94.8(e) as necessary for safety or to otherwise protect the engine.

[64 FR 73331, Dec. 29, 1999, as amended at 67 FR 68342, Nov. 8, 2002; 68 FR 9783, Feb. 28, 2003; 68 FR 54960, Sept. 19, 2003; 70 FR 40458, July 13, 2005]

§94.10 Warranty period.

(a)(1) Warranties imposed by §94.1107 for Category 1 or Category 2 engines shall apply for a period of operating hours equal to at least 50 percent of the useful life in operating hours or a period of years equal to at least 50 percent of the useful life in years, whichever comes first.

(2) Warranties imposed by §94.1107 for Category 3 engines shall apply for a period of operating hours equal to at least the full useful life in operating hours or a period of years equal to at least the full useful life in years, whichever comes first.

(b) Warranties imposed by §94.1107 shall apply for a period not less than any mechanical warranties provided by the manufacturer to the owner.

[64 FR 73331, Dec. 29, 1999, as amended at 68 FR 9784, Feb. 28, 2003]

§94.11 Requirements for rebuilding certified engines.

(a) The provisions of this section apply with respect to engines subject to the standards prescribed in §94.8 and are applicable to the process of engine rebuilding. Engine rebuilding means to overhaul an engine or to otherwise perform extensive service on the engine (or on a portion of the engine or engine system). For the purpose of this definition, perform extensive service means to disassemble the engine (or portion of the engine or engine system), inspect and/or replace many of the parts, and reassemble the engine (or portion of the engine or engine system) in such a manner that significantly increases the service life of the resultant engine.

(b) When rebuilding an engine, portions of an engine, or an engine system, there must be a reasonable technical basis for knowing that the resultant engine is equivalent, from an emissions standpoint, to a certified configuration (i.e., tolerances, calibrations, specifications), and the model year(s) of the resulting engine configuration must be identified. A reasonable basis would exist if:

(1) Parts installed, whether the parts are new, used, or rebuilt, are such that a person familiar with the design and function of motor vehicle engines would reasonably believe that the parts perform the same function with respect to emission control as the original parts; and

(2) Any parameter adjustment or design element change is made only:

(i) In accordance with the original engine manufacturer's instructions; or

(ii) Where data or other reasonable technical basis exists that such parameter adjustment or design element change, when performed on the engine or similar engines, is not expected to adversely affect in-use emissions.

(c) When an engine is being rebuilt and remains installed or is reinstalled in the same vessel, it must be rebuilt to a configuration of the same or later model year as the original engine. When an engine is being replaced, the replacement engine must be an engine of (or rebuilt to) a certified configuration that is equivalent, from an emissions standpoint, to the engine being replaced.

(d) At time of rebuild, emission-related codes or signals from on-board monitoring systems may not be erased or reset without diagnosing and responding appropriately to the diagnostic codes, regardless of whether the systems are installed to satisfy requirements in §94.211 or for other reasons and regardless of form or interface. Diagnostic systems must be free of all such codes when the rebuilt engine is returned to service. Such signals may not be rendered inoperative during the rebuilding process.

(e)(1) When conducting a rebuild, all critical emission-related components listed in Appendix I of this part not

otherwise addressed by paragraphs (b) through (d) of this section must be checked and cleaned, adjusted, repaired, or replaced as necessary, following manufacturer recommended practices.

(2) During the installation of a rebuilt engine, all critical emission-related components listed in Appendix I of this part not otherwise addressed by paragraphs (b) through (d) of this section must be checked as necessary, following manufacturer recommended practices.

(f) Records shall be kept by parties conducting activities included in paragraphs (b) through (e) of this section. At minimum the records shall include the hours of operation at the time of rebuild, a listing of work performed on the engine and emission-related control components (including a listing of parts and components used, engine parameter adjustments, emission-related codes or signals responded to and reset), and work performed under paragraph (e) of this section.

(1) Parties may keep records in whatever format or system they choose as long as the records are understandable to an EPA enforcement officer or can be otherwise provided to an EPA enforcement officer in an understandable format when requested.

(2) Parties are not required to keep records of information that is not reasonably available through normal business practices including information on activities not conducted by themselves or information that they cannot reasonably access.

(3) Parties may keep records of their rebuilding practices for an engine family rather than on each individual engine rebuilt in cases where those rebuild practices are followed routinely.

(4) Records must be kept for a minimum of two years after the engine is rebuilt.

(g) For Category 3 engines, the owner and operator shall also comply with the recordkeeping requirements in the Annex VI Technical Code (incorporated by reference at § 94.5) regarding the Engine Book of Record Parameters.

[64 FR 73331, Dec. 29, 1999, as amended at 68 FR 9784, Feb. 28, 2003]

§ 94.12 Interim provisions.

This section contains provisions that apply for a limited number of calendar years or model years. These provisions supercede the other provisions of this part. The provisions of this section do not apply for Category 3 engines.

(a) *Compliance date of standards.* Certain companies may delay compliance with emission standards. Companies wishing to take advantage of this provision must inform the Designated Officer of their intent to do so in writing before the date that compliance with the standards would otherwise be mandatory.

(1) Post-manufacture marinizers may elect to delay the model year of the Tier 2 standards for commercial engines as specified in § 94.8 by one year for each engine family.

(2) Small-volume manufacturers may elect to delay the model year of the Tier 2 standards for recreational engines as specified in § 94.8 by five years for each engine family.

(b) *Early banking of emission credits.* (1) A manufacturer may optionally certify engines manufactured before the date the Tier 2 standards take effect to earn emission credits under the averaging, banking, and trading program. Such optionally certified engines are subject to all provisions relating to mandatory certification and enforcement described in this part. Manufacturers may begin earning credits for recreational engines on December 9, 2002.

(2) Consistent with the provisions of Subpart D of this part, NO_X and PM emission credits may be generated from engines prior to the applicable effective compliance date of the applicable standard (i.e., the effective compliance date in § 94.8(a), as applicable), relative to baseline emission rates.

(3)(i) THC+NO_X credits generated under this paragraph (b) shall be calculated as specified in § 92.305, except that the baseline emission rate may be either the applicable standard or a measured THC+NO_X baseline level for the configuration with the lowest NO_X emission rate in the applicable engine family. The additional credits resulting from using a measured baseline (instead of the applicable standard) shall

be discounted by 10 percent. This discount does not apply to the portion of the credits resulting from the engine's emissions being below the applicable standard. Baseline emission rates may not exceed the IMO NO_X limits.

(ii) PM credits generated under this paragraph (b) shall be calculated as specified in §94.305, except that the applicable standard may be replaced by a measured PM baseline emission rate for the configuration with the lowest NO_X emission rate in the applicable engine family that is approved in advance by the Administrator. The additional credits resulting from using a measured baseline (instead of the applicable standard) shall be discounted by 10 percent. This discount does not apply to the portion of the credits resulting from the engine's emissions being below the applicable standard.

(4)(i) For post-manufacture marinizers, measured baseline emission levels may be based on emissions from a single engine for each engine family.

(ii) For all other manufacturers, measured baseline emission levels must be based on the average of emissions from at least three engines for each engine family.

(iii) The Administrator must approve any measured baselines in advance.

(5) For an engine to be eligible to generate early credits under this paragraph (b), its certified emission levels for all pollutants must be below the Tier 2 standards listed in §94.8, with the following exception: PMMs may include in this early credit program Category 1 marine engines with certified emissions above the Tier 2 standards listed in §94.8. Early credits generated by Category 1 marine engines with certified emissions above the Tier 2 standards listed in §94.8 may not be used for model year 2008 or later engines.

(c) Testing of Category 1 engines subject to the requirements of this part that is conducted by the Administrator shall be performed using test fuels that meet the specifications in §94.108 and have a sulfur content no higher than 0.20 weight percent, unless the PM emission rates are corrected for the effect of a higher fuel sulfur content.

(d) Post-manufacture marinizers may import an uncertified engine for marinization, in cases where the engine in the final marinized configuration is not subject to the standards of this part because:

(1) The model year of the marinized engine is prior to the first model year for which engines of that size are subject to the standards;

(2) The post-manufacture marinizer is marinizing the engine under paragraph (a) of this section; or

(3) The post-manufacture marinizer is granted hardship relief from the Tier 2 standards under §94.209(c).

(e) *Compliance date of NTE requirements* (1) Notwithstanding the other provisions of this part, the requirements of §94.8(e) for commercial marine engines start with 2010 model year engines for post-manufacture marinizers and 2007 model year engines for all other engine manufacturers.

(2) Notwithstanding the other provisions of this part, the requirements of §94.8(e) for recreational marine engines start with 2012 model year engines for post-manufacture marinizers and 2009 model year engines for all other engine manufacturers.

(f) Manufacturers may submit test data collected using the Annex VI test procedures to show compliance with Tier 1 standards for model years before 2007. Note: Starting in 2007, EPA may approve a manufacturer's request to continue using alternate procedures under §94.102(c), as long as the manufacturer satisfies EPA that the differences in testing will not affect NO_X emission rates.

(g) *Flexibility for engines over 560kW.* Notwithstanding the other provisions of this part, manufacturers may choose to delay certification of marine engines with less than 2.5 liters per cylinder and rated power above 560 kW, that are derived from a land-based nonroad engine with a rated power greater than 560 kW, if they do all of the following:

(1) Certify all of their applicable marine engines with less than 2.5 liters per cylinder and rated power above 560 kW to a NO_X standard of 6.4 g/kW-hr for model years 2008 through 2012.

(2) Notify EPA in writing before 2004 of their intent to use this provision. This notification must include a signed

statement certifying that the manufacturer will comply with all the provisions of this paragraph (g).

(3) Add a permanent, legible label, written in block letters in English, to a readily visible part of each engine exempted under this paragraph (f). This label must include at least the following items:

(i) The label heading ''EMISSION CONTROL INFORMATION''.

(ii) Your corporate name and trademark.

(iii) Engine displacement (in liters), rated power, and model year of the engine or whom to contact for further information.

(iv) The statement ''THIS ENGINE IS EXEMPT UNDER 40 CFR 94.12(g) FROM EMISSION STANDARDS AND RELATED REQUIREMENTS.''.

(h) *Flexibility for small-volume boat builders.* Notwithstanding the other provisions of this part, manufacturers may sell uncertified recreational engines to small-volume boat builders during the first five years for which the emission standards in § 94.8 apply, subject to the following provisions:

(1) The U.S.-directed production volume of boats from any small-volume boat builder using uncertified engines during the total five-year period may not exceed 80 percent of the manufacturer's average annual production for the three years prior to the general applicability of the recreational engine standards in § 94.8, except as allowed in paragraph (h)(2) of this section.

(2) Small-volume boat builders may exceed the production limits in paragraph (h)(1) of this section, provided they do not exceed 20 boats during the five-year period or 10 boats in any single calendar year. This does not apply to boats powered by engines with displacement greater than 2.5 liters per cylinder.

(3) Small-volume boat builders must keep records of all the boats and engines produced under this paragraph (h), including boat and engine model numbers, serial numbers, and dates of manufacture. Records must also include information verifying compliance with the limits in paragraph (h)(1) or (2) of this section. Keep these records until at least two full years after you no longer use the provisions in this paragraph (h).

(4) Manufacturers must add a permanent, legible label, written in block letters in English, to a readily visible part of each engine exempted under this paragraph (h).

This label must include at least the following items:

(i) The label heading ''EMISSION CONTROL INFORMATION''.

(ii) Your corporate name and trademark.

(iii) Engine displacement (in liters), rated power, and model year of the engine or whom to contact for further information.

(iv) The statement ''THIS ENGINE IS EXEMPT UNDER 40 CFR 94.12(h)

FROM EMISSION STANDARDS AND RELATED REQUIREMENTS.''.

(i) *Early use of future provisions.* For model years 2009 through 2013, certain marine engines will be subject to the requirements of this part 94 while others will be subject to the requirements of 40 CFR part 1042. Manufacturers may ask for flexibility in making the transition to the new regulations as follows:

(1) You may ask to use a combination of the test procedures of this part and those of 40 CFR part 1042. This might include the early use of the duty cycles and NTE specifications that apply for Tier 3 or Tier 4 engines. We will approve your request only if you show us that it does not affect your ability to demonstrate compliance with the applicable emission standards. This generally requires that the combined procedures would result in emission measurements at least as high as those that would be measured using the procedures specified in this part. Alternatively, you may demonstrate that the combined effects of the procedures is small relative to your compliance margin (the degree to which your engines are below the applicable standards).

(2) You may ask to comply with the administrative requirements of 40 CFR parts 1042 and 1068 instead of the equivalent requirements of this part.

(j) *Transition to new category thresholds.* Beginning model year 2012, engines with maximum engine power at

or below 3700 kW with per-cylinder displacement at or above 5.0 liters and below 7.0 liters are Category 1 engines subject to 40 CFR part 1042. Similarly, beginning model year 2014, engines with maximum engine power above 3700 kW with per-cylinder displacement at or above 5.0 liters and below 7.0 liters are Category 1 engines subject to 40 CFR part 1042. For purposes of this paragraph (j), maximum engine power has the meaning given in 40 CFR 1042.901.

[64 FR 73331, Dec. 29, 1999, as amended at 67 FR 68343, Nov. 8, 2002; 68 FR 9784, Feb. 28, 2003; 68 FR 54960, Sept. 19, 2003; 69 FR 9215, Feb. 27, 2004; 70 FR 40458, July 13, 2005; 73 FR 37196, June 30, 2008; 75 FR 22981, Apr. 30, 2010]

Subpart B—Test Procedures

§ 94.101 Applicability.

Provisions of this subpart apply for testing performed by the Administrator or a manufacturer.

§ 94.102 General provisions.

(a) The test procedures specified in this part are intended to produce emission measurements that are equivalent to emission measurements that would result from emission tests performed during in-use operation using the same engine configuration installed in a vessel.

(b) Test procedures otherwise allowed by the provisions of this subpart shall not be used where such procedures are not consistent with good engineering practice and the regulatory goal specified in paragraph (a) of this section.

(c) Alternate test procedures may be used if shown to yield equivalent results, and if approved in advance by the Administrator.

§ 94.103 Test procedures for Category 1 marine engines.

(a) Gaseous and particulate emissions shall be measured using the test procedures specified in 40 CFR part 89, except as otherwise specified in this subpart.

(b) The Administrator may specify changes to the provisions of paragraph (a) of this section that are necessary to comply with the general provisions of § 94.102.

(c) Measure CH_4 as specified in 40 CFR 1042.235 starting in the 2012 model year.

[64 FR 73331, Dec. 29, 1999, as amended at 74 FR 56374, Oct. 30, 2009]

§ 94.104 Test procedures for Category 2 marine engines.

(a) Gaseous and particulate emissions shall be measured using the test procedures specified in 40 CFR part 92, except as otherwise specified in this subpart.

(b)(1) The requirements of 40 CFR part 92 related to charge air temperatures, engine speed and load, and engine air inlet restriction pressures do not apply for marine engines.

(2) For marine engine testing, charge air temperatures, engine speed and load, and engine air inlet restriction pressures shall be representative of typical in-use marine engine conditions.

(c) Conduct testing at ambient temperatures from 13 °C to 30 °C.

(d) The Administrator may specify changes to the provisions of paragraph (a) of this section that are necessary to comply with the general provisions of § 94.102.

(e) Measure CO_2 as described in 40 CFR 92.129 through the 2010 model year. Measure CO_2 as specified in 40 CFR 1042.235 starting in the 2011 model year. Measure CH_4 as specified in 40 CFR 1042.235 starting in the 2012 model year.

[64 FR 73331, Dec. 29, 1999, as amended at 67 FR 68343, Nov. 8, 2002; 74 FR 56374, Oct. 30, 2009]

§ 94.105 Duty cycles.

(a) *Overview*. For the purpose of determining compliance with the emission standards of § 94.8, except for those in § 94.8(e), engines shall be tested using the appropriate duty cycles described in this section.

(b) *General cycle*. Propulsion engines that are used with (or intended to be used with) fixed-pitch propellers, propeller-law auxiliary engines, and any other engines for which the other duty cycles of this section do not apply, shall be tested using the duty cycle described in the following Table B–1:

TABLE B–1—GENERAL MARINE DUTY CYCLE

Mode No.	Engine speed [1] (percent of maximum test speed)	Percent of maximum test power [2]	Minimum time in mode (minutes)	Weighting factors
1	100	100	5.0	0.20
2	91	75	5.0	0.50
3	80	50	5.0	0.15
4	63	25	5.0	0.15

[1] Engine speed: ±2 percent of point.
[2] Power: ±2 percent of engine maximum value.

(c) *Variable-pitch and electrically coupled propellers.* (1) Constant-speed propulsion engines that are used with (or intended to be used with) variable-pitch propellers or with electrically coupled propellers shall be tested using the duty cycle described in the following Table B–2:

TABLE B–2—DUTY CYCLE FOR CONSTANT-SPEED PROPULSION ENGINES

Mode No.	Engine speed [1] (percent of maximum test speed)	Percent of maximum test power [2]	Minimum time in mode (minutes)	Weighting factors
1	100	100	5.0	0.20
2	100	75	5.0	0.50
3	100	50	5.0	0.15
4	100	25	5.0	0.15

[1] Engine speed: ±2 percent of point.
[2] Power: ±2 percent of engine maximum value.

(2) For the purpose of determining compliance with the emission standards of § 94.8, variable-speed propulsion engines that are used with (or intended to be used with) variable-pitch propellers or with electrically coupled propellers shall be tested using the duty cycle described in Table B–3, which follows:

TABLE B–3—DUTY CYCLE FOR VARIABLE SPEED PROPULSION ENGINES USED ON NON-PROPELLER LAW VESSELS AND FOR VARIABLE SPEED AUXILIARY ENGINES

Test segment	Mode No.	Engine speed [1]	Percent of maximum test torque [2]	Minimum time in mode (minutes)	Weighting factors
1	1	Maximum Test Speed	100	5.0	0.15
1	2	Maximum Test Speed	75	5.0	0.15
1	3	Maximum Test Speed	50	5.0	0.15
1	4	Maximum Test Speed	10	5.0	0.10
2	5	Intermediate	100	5.0	0.10
2	6	Intermediate	75	5.0	0.10
2	7	Intermediate	50	5.0	0.10
2	8	Idle	0	5.0	0.15

[1] Engine speed (non-idle): ±2 percent of point. Engine speed (idle): Within manufacturer's specifications. Idle speed is specified by the manufacturer.
[2] Torque (non-idle): ±2 percent of engine maximum value. Torque (idle): minimum fueling rate Load less than 5 percent of peak torque.

(d) *Auxiliary.* For the purpose of determining compliance with the emission standards of § 94.8:

(1) Constant speed auxiliary engines shall be tested using the duty cycle described in Table B–4, which follows:

TABLE B–4—DUTY CYCLE FOR CONSTANT-SPEED AUXILIARY ENGINES

Mode No.	Engine speed [1]	Percent of maximum test torque [2]	Minimum time in mode (minutes)	Weighting factors
1	Maximum Test Speed	100	5.0	0.05
2	Maximum Test Speed	75	5.0	0.25
3	Maximum Test Speed	50	5.0	0.30
4	Maximum Test Speed	25	5.0	0.30
5	Maximum Test Speed	10	5.0	0.10

[1] Engine speed: ±2 percent of point.
[2] Torque: ±2 percent of engine maximum value.

(2) Variable speed auxiliary engines shall be tested using the duty cycle described in Table B–3 in paragraph (c)(2) of this section.

(e) *Recreational.* For the purpose of determining compliance with the emission standards of § 94.8, recreational engines shall be tested using the duty cycle described in Table B–5, which follows:

TABLE B–5—RECREATIONAL MARINE DUTY CYCLE

Mode No.	Engine speed(1) (percent of maximum test speed)	Percent of maximum test power(2)	Minimum time in mode (minutes)	Weighting factors
1	100	100	5.0	0.08
2	91	75	5.0	0.13
3	80	50	5.0	0.17
4	63	25	5.0	0.32
5	idle	0	5.0	0.30

[1] Engine speed: ±2 percent of point.
[2] Power: ±2 percent of engine maximum value.

[64 FR 73331, Dec. 29, 1999, as amended at 67 FR 68343, Nov. 8, 2002; 70 FR 40458, July 13, 2005]

§ 94.106 Supplemental test procedures for Category 1 and Category 2 marine engines.

This section describes the test procedures for supplemental testing conducted to determine compliance with the exhaust emission requirements of § 94.8(e)(1). In general, the supplemental test procedures are the same as those otherwise specified by this subpart, except that they cover any speeds, loads, ambient conditions, and operating parameters that may be experienced in use. The test procedures specified by other sections in this subpart also apply to these tests, except as specified in this section.

(a) Notwithstanding other provisions of this subpart, testing conducted to determine compliance with the exhaust emission requirements of § 94.8(e) may be conducted:

(1) At any speed and load (or any combination of speeds and loads that is nominally steady-state) within the applicable Not To Exceed Zone specified in paragraph (b) of this section;

(2)(i) Without correction, at any intake air temperature between 13°C and 35°C (or between 13°C and 30°C for engines not drawing intake air directly from a space that could be heated by the engine);

(ii) Without correction at any ambient water temperature (or equivalent) between 5°C and 27°C;

(iii) Without correction at any ambient humidity between 7.1 and 10.7 grams of moisture per kilogram of dry air; and

(3) With a continuous sampling period not less than 30 seconds in duration.

(b) The specified Not to Exceed Zones for marine engines are defined as follows. These Not to Exceed Zones apply, unless a modified zone is established under paragraph (c) of this section.

(1) For commercial Category 1 engines certified using the duty cycle specified in § 94.105(b), the Not to Exceed zones are defined as follows:

(i) The Not to Exceed zone is the region between the curves power = 1.15 × SPD^2 and power = 0.85 × SPD^4, excluding all operation below 25% of maximum power at rated speed and excluding all operation below 63% of maximum test speed.

(ii) This zone is divided into two subzones, one above and one below 45% of maximum power at rated speed.

(iii) SPD in paragraph (b)(1)(i) of this section refers to percent of maximum test speed.

(iv) See Figure B–1 for an illustration of this Not to Exceed zone which follows:

Figure B-1

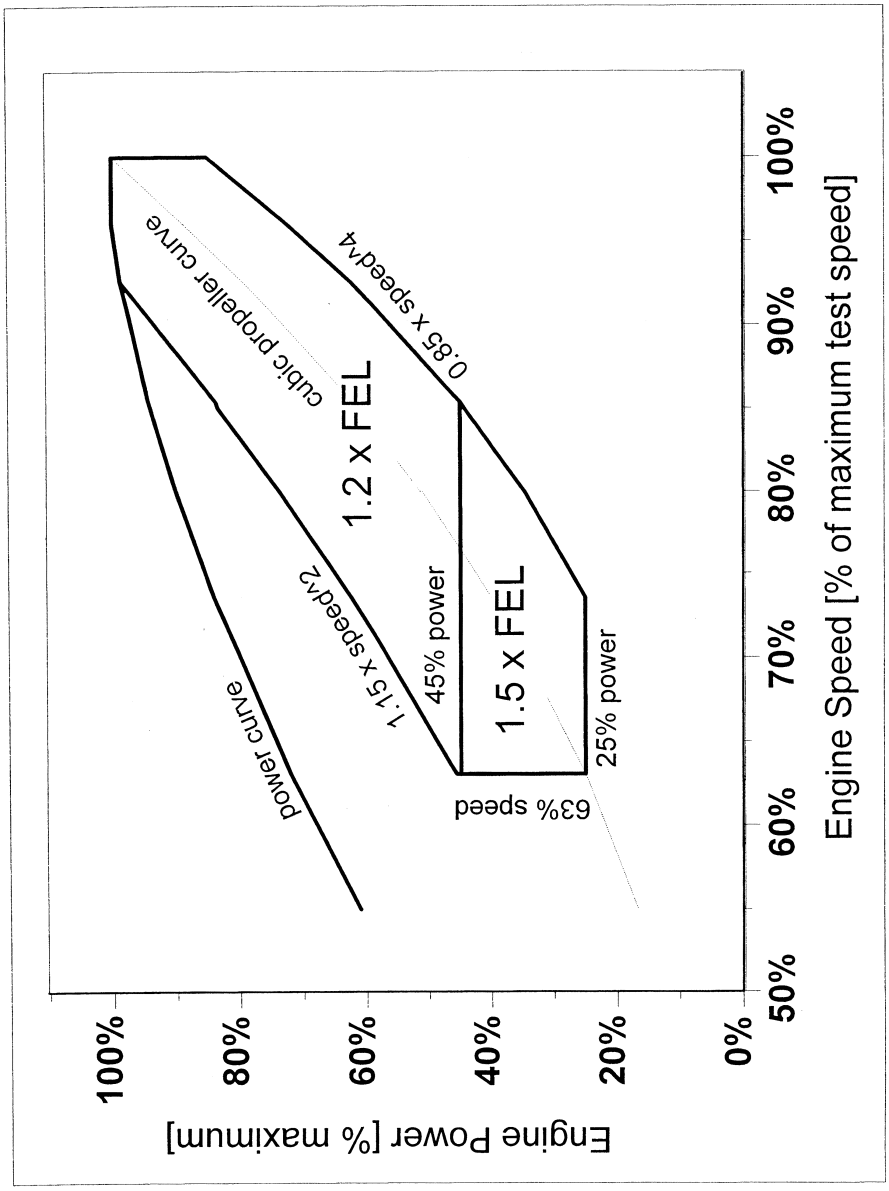

(2) For Category 2 engines certified using the duty cycle specified in §94.105(b), the Not to Exceed zones are defined as follows:

(i) The Not to Exceed zone is the region between the curves power = 1.04 × SPD^2 and power = 0.76 × SPD^4, excluding all operation below 25% of maximum power at rated speed and excluding all operation below 63% of maximum test speed.

(ii) This zone is divided into two subzones, one above and one below 45% of maximum power at rated speed.

(iii) SPD in paragraph (b)(2)(i) of this section refers to percent of maximum test speed.

(iv) See Figure B–2 in paragraph (b)(3) of this section for an illustration of this Not to Exceed zone.

(3) For engines certified using the duty cycle specified in § 94.105(c)(2), the Not to Exceed zones are defined as follows:

Figure B-2

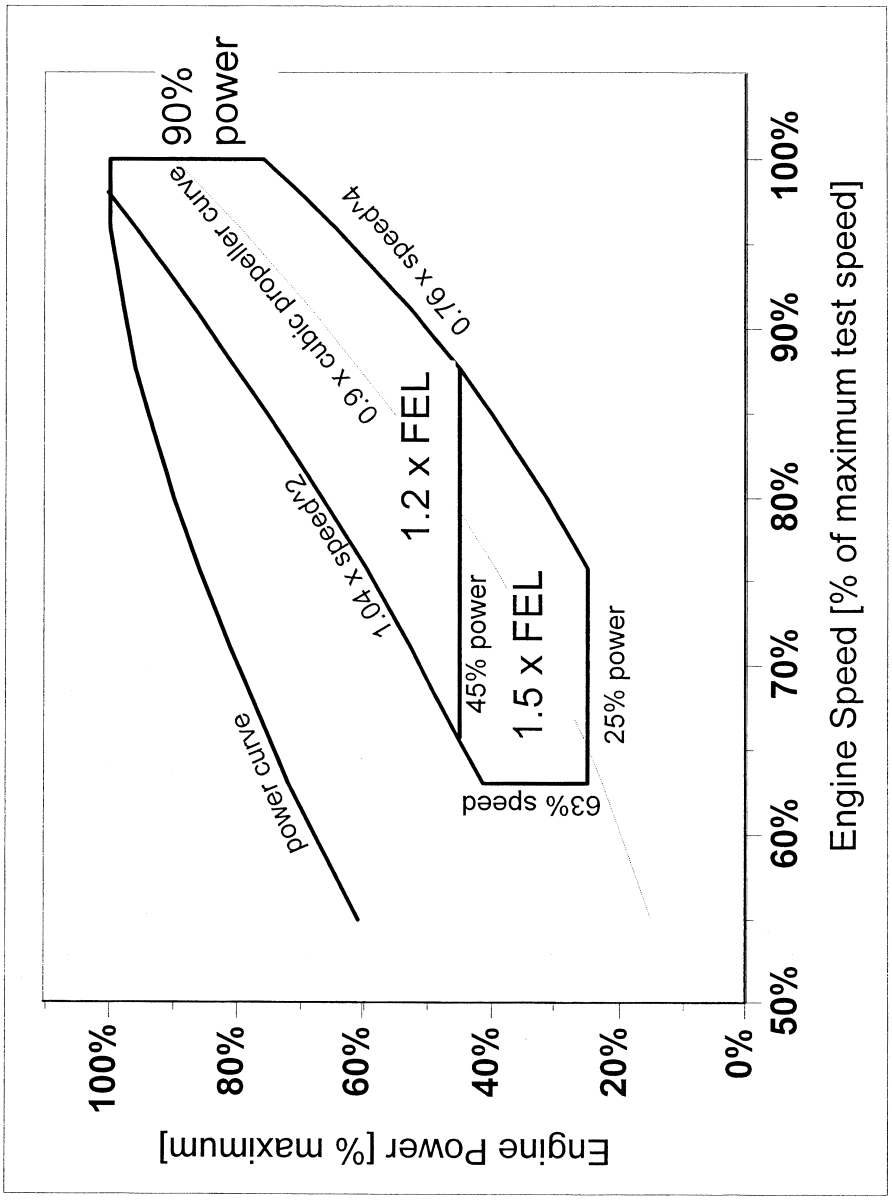

(i) The Not to Exceed zone is the region above the curve power = 0.85 SPD^4, excluding all operation below 25% of maximum power at rated speed and excluding all operation below 63% of maximum test.

(ii) This zone is divided into two subzones, one above and one below 45% of maximum power at rated speed.

(iii) SPD in paragraph (b)(3)(i) of this section refers to percent of maximum test speed.

(iv) See Figure B–3 for an illustration of this Not to Exceed zone:

Figure B-3

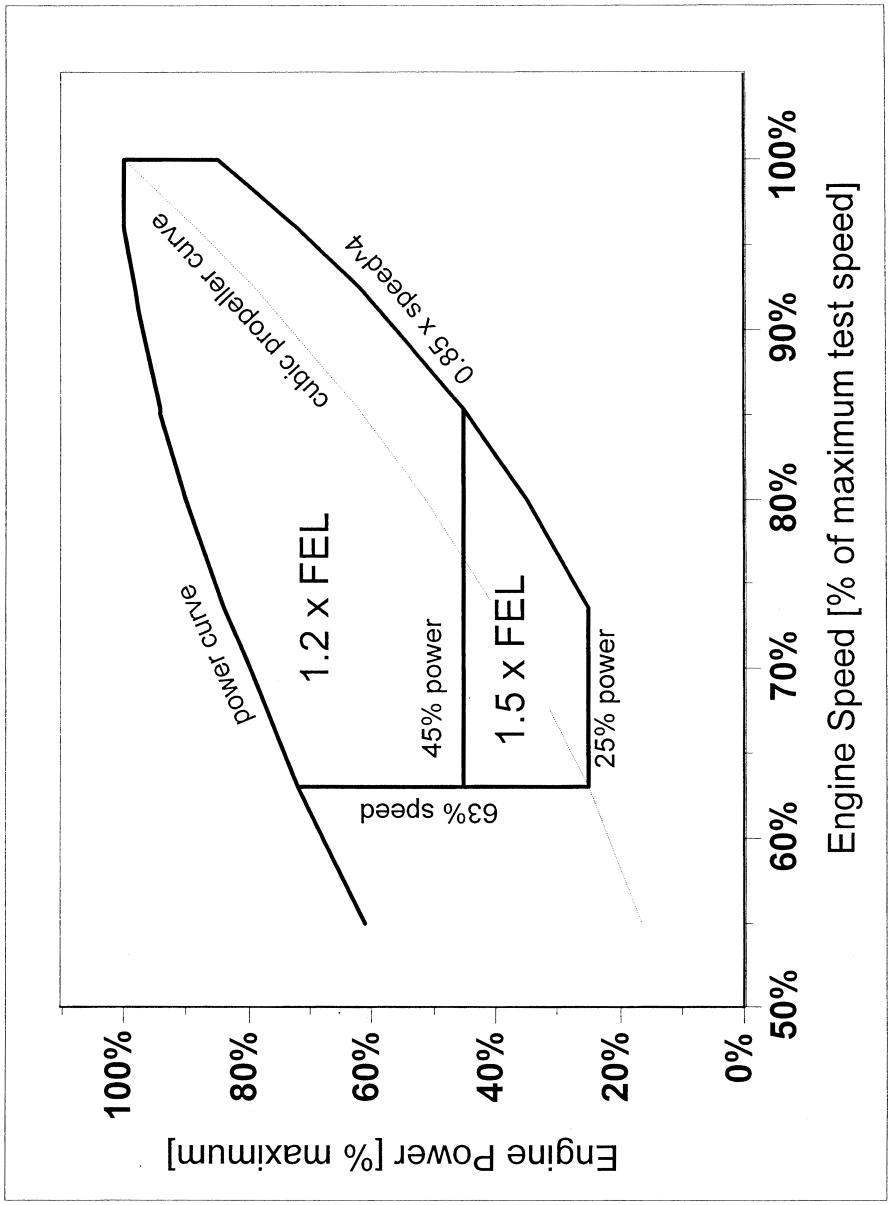

(4) For engines certified using the duty cycle specified in § 94.105(c)(1), the Not to Exceed zone is defined as any load greater than or equal to 25 percent of maximum power at rated speed, and any speed at which the engine operates in use.

(5) For recreational marine engines certified using the duty cycle specified in § 94.105(e), the Not to Exceed zones are defined as follows:

(i) The Not to Exceed zone is the region between the curves power = 1.15 × SPD^2 and power = 0.85 × SPD^4, excluding all operation below 25% of maximum power at rated speed and excluding all operation below 63% of maximum test speed.

(ii) This zone is divided into three subzones, one below 45% of maximum power at maximum test speed; one above 95% of maximum test speed; and a third area including all of the remaining area of the NTE zone.

(iii) SPD in paragraph (b)(5)(i) of this section refers to percent of maximum test speed.

(iv) See Figure B–4 for an illustration of this Not to Exceed zone as follows:

Figure B-4

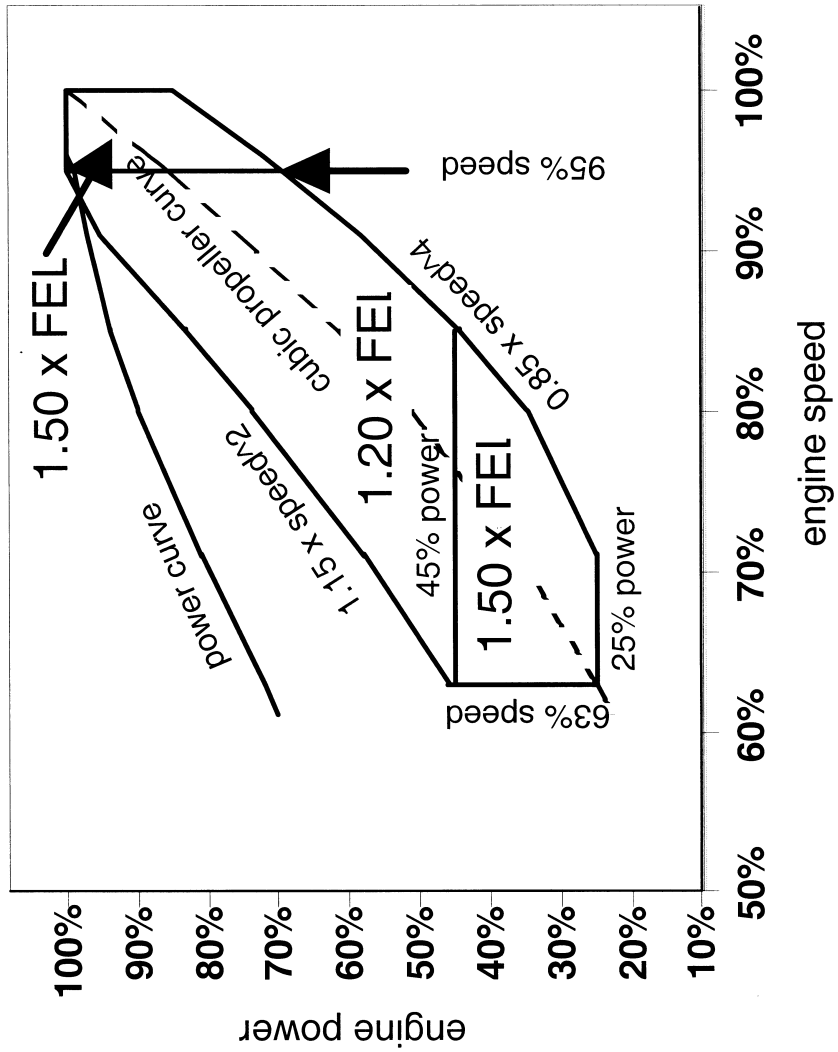

(c)(1) Upon request by the manufacturer, the Administrator may specify a narrower Not to Exceed Zone for an engine family at the time of certification, provided that the narrower Not to Exceed Zone includes all speeds greater than 63 percent of maximum test speed and loads greater than 25 percent of maximum power at rated speed at which the engines are expected to normally operate in use.

(2) At the time of certification, the Administrator may specify, or require the manufacturer to specify, a broader Not to Exceed Zone for an engine family, provided that the broader Not to Exceed Zone includes only speeds greater than 63 percent of maximum test speed and loads greater than 25 percent of maximum power at rated speed at which the engines are expected to normally operate in use.

(d) Testing conducted to determine compliance with the exhaust emission requirements of § 94.8(e) may be conducted at any ambient air temperature or humidity outside the ranges specified in paragraph (a)(2) of this section, provided that emission measurements are corrected to be equivalent to measurements within the ranges specified in paragraph (a)(2) of this section. Correction of emission measurements made in accordance with this paragraph (d) shall be made in accordance with good engineering practice. The measurements shall be corrected to be within the range using the minimum possible correction.

(e) Testing conducted under this section may not include engine starting.

[64 FR 73331, Dec. 29, 1999, as amended at 67 FR 68344, Nov. 8, 2002; 68 FR 9784, Feb. 28, 2003; 70 FR 40458, July 13, 2005]

§ 94.107 Determination of maximum test speed.

(a) *Overview*. This section specifies how to determine maximum test speed from a lug curve. This maximum test speed is used in §§ 94.105, 94.106, and § 94.109 (including the tolerances for engine speed specified in § 94.105).

(b) *Generation of lug curve*. Prior to beginning emission testing, generate maximum measured brakepower versus engine speed data points using the applicable method specified in 40 CFR 1065.510. These data points form the lug curve. It is not necessary to generate the entire lug curve. For the portion of the curve where power increases with increasing speed, it is not necessary to generate points with power less than 90 percent of the maximum power value. For the portion of the curve where power decreases with increasing speed, it is not necessary to generate points with power less than 75 percent of the maximum power value.

(c) *Normalization of lug curve*. (1) Identify the point (power and speed) on the lug curve at which maximum power occurs.

(2) Normalize the power values of the lug curve by dividing them by the maximum power value identified in paragraph (b)(1) of this section, and multiplying the resulting values by 100.

(3) Normalize the engine speed values of the lug curve by dividing them by the speed at which maximum power occurs, which is identified in paragraph (b)(1) of this section, and multiplying the resulting values by 100.

(4) Maximum engine power is located on the normalized lug curve at 100 percent power and 100 percent speed.

(d) *Determination of maximum test speed*. Calculate the maximum test speed from the speedfactor analysis described in this paragraph (d).

(1) For a given combination of engine power and speed (i.e., a given power/speed point), the speedfactor is the distance to the normalized power/speed point from the zero power, zero speed point. The value of the speedfactor is defined as:

$$\text{Speedfactor} = \sqrt{(\text{power})^2 + (\text{speed})^2}$$

(2) Calculate speedfactors for the power/speed data points on the lug curve, and determine the maximum value.

(3) Maximum test speed is the speed at which the maximum value for the speedfactor occurs.

(e) For constant-speed engines, rated speed is the maximum test speed.

(f) For Category 3 engines, manufacturers may choose to set the maximum

test speed at the maximum in-use engine speed instead of the speed specified in § 94.107(d).

[64 FR 73331, Dec. 29, 1999, as amended at 68 FR 9784, Feb. 28, 2003; 70 FR 40458, July 13, 2005]

§ 94.108 Test fuels.

(a) *Distillate diesel test fuel.* (1) The diesel fuels for testing Category 1 and Category 2 marine engines designed to operate on distillate diesel fuel shall be clean and bright, with pour and cloud points adequate for operability. The diesel fuel may contain nonmetallic additives as follows: cetane improver, metal deactivator, antioxidant, dehazer, antirust, pour depressant, dye, dispersant, and biocide. The diesel fuel shall also meet the specifications (as determined using methods incorporated by reference at § 94.5) in Table B–5 of this section, or substantially equivalent specifications approved by the Administrator, as follows:

TABLE B–5—FEDERAL TEST FUEL SPECIFICATIONS

Item	Procedure [1]	Value
Cetane	ASTM D 613–01	40–48
Distillation Range:		
Initial boiling point, °C	ASTM D 86–01	171–204
10% point, °C	ASTM D 86–01	204–238
50% point, °C	ASTM D 86–01	243–282
90% point, °C	ASTM D 86–01	293–332
End point, °C	ASTM D 86–01	321–366
Flashpoint, °C	ASTM D 93–02	54 minimum
Gravity, API	ASTM D 287–92	32–37
Hydrocarbon composition:		
Aromatics, volume percent	ASTM D 1319–02a or D 5186–99	10 minimum
Olefins and Saturates (paraffins and napththenes).	ASTM D 1319–02a	Remainder
Total Sulfur, weight percent	ASTM D 129–00 or D 2622–98	0.03–0.80
Viscosity at 38 °C, centistokes	ASTM D 445–01	2.0–3.2

[1] All ASTM standards are incorporated by reference in § 94.5.

(2) Other diesel fuels may be used for testing provided:

(i) They are commercially available; and

(ii) Information, acceptable to the Administrator, is provided to show that only the designated fuel would be used in service; and

(iii) Use of a fuel listed under paragraph (a)(1) of this section would have a detrimental effect on emissions or durability; and

(iv) Written approval from the Administrator of the fuel specifications is provided prior to the start of testing.

(3) The specification of the fuel to be used under paragraphs (a)(1), and (a)(2) of this section shall be reported in the application for certification.

(4) Manufacturers may perform testing using the low-sulfur diesel test fuel or the ultra low-sulfur diesel test fuel specified in 40 CFR part 1065.

(b) *Other fuel types.* For Category 1 and Category 2 engines that are designed to be capable of using a type of fuel (or mixed fuel) instead of or in addition to distillate diesel fuel (*e.g.*, natural gas, methanol, or nondistillate diesel), and that are expected to use that type of fuel (or mixed fuel) in service:

(1) A commercially available fuel of that type shall be used for exhaust emission testing. The manufacturer shall propose for the Administrator's approval a set of test fuel specifications that take into account the engine design and the properties of commercially available fuels. The Administrator may require testing on each fuel if it is designed to operate on more than one fuel. These test fuel specifications shall be reported in the application for certification.

(2) [Reserved]

(c) *Service accumulation fuel.* Fuel used for service accumulation shall be representative of the typical fuel expected to be used by the engines in service.

(d) *Correction for sulfur*—(1) *High sulfur fuel.* (i) Particulate emission measurements from Category 1 or Category

2 engines without exhaust aftertreatment obtained using a diesel fuel containing more than 0.40 weight percent sulfur may be adjusted to a sulfur content of 0.40 weight percent.

(ii) Adjustments to the particulate measurement for using high sulfur fuel shall be made using the following equation:

$$PM_{adj}=PM-[BSFC \times 0.0917 \times (FSF-0.0040)]$$

Where:
PM_{adj}=adjusted measured PM level [g/kW-hr]
PM=measured weighted PM level [g/kW-hr]
BSFC=measured brake specific fuel consumption [g/kW-hr]
FSF=fuel sulfur weight fraction

(2) *Low sulfur fuel.* (i) Particulate emission measurements from Category 1 or Category 2 engines without exhaust aftertreatment obtained using diesel fuel containing less than 0.03 weight percent sulfur shall be adjusted to a sulfur content of 0.20 weight percent.

(ii) Adjustments to the particulate measurement for using ultra low-sulfur fuel shall be made using the following equation:

$$PM_{adj}=PM+[BSFC \times 0.0917 \times (0.0020-FSF)]$$

Where:
PM_{adj}=adjusted measured PM level [g/kW-hr]
PM=measured weighted PM level [g/kW-hr]
BSFC=measured brake specific fuel consumption [g/kW-hr]
FSF=fuel sulfur weight fraction

(e) *Test fuel for Category 3 engines.* For testing Tier 1 engines, use test fuels meeting the specifications listed in the Annex VI Technical Code (incorporated by reference in § 94.5).

[64 FR 73331, Dec. 29, 1999, as amended at 67 FR 68345, Nov. 8, 2002; 68 FR 9784, Feb. 28, 2003; 73 FR 37196, June 30, 2008]

§ 94.109 Test procedures for Category 3 marine engines.

(a) Gaseous emissions shall be measured using the test cycles and procedures specified by Section 5 of the Annex VI Technical Code (incorporated by reference in § 94.5), except as otherwise specified in this paragraph (a).

(1) The inlet air and exhaust restrictions shall be set at the average in-use levels.

(2) Measurements are valid only for sampling periods in which the temperature of the charge air entering the engine is within 3 °C of the temperature that would occur in-use under ambient conditions (temperature, pressure, and humidity) identical to the test conditions. You may measure emissions within larger discrepancies, but you may not use those measurements to demonstrate compliance.

(3) Engine coolant and engine oil temperatures shall be equivalent to the temperatures that would occur in-use under ambient conditions identical to the test conditions.

(4) Exhaust flow rates shall be calculated using measured fuel flow rates.

(5) Standards used for calibration shall be traceable to NIST standards. (Other national standards may be used if they have been shown to be equivalent to NIST standards.)

(6) Certification tests may be performed at any representative pressure and humidity levels. Certification tests may be performed at any ambient air temperature from 13 °C to 30 °C and any charge air cooling water temperature from 17 °C to 27 °C. These limits apply instead of the limits specified in section 5.2.1 of the Annex VI Technical Code. Correct emissions for test conditions using the corrections specified in section 5.12.3 of the Annex VI Technical Code.

(7) Test cycles shall be denormalized based on the maximum test speed described in § 94.107.

(b) Analyzers meeting the specifications of either 40 CFR part 1065, subpart C, or ISO 8178–1 (incorporated by reference in § 94.5) shall be used to measure THC and CO.

(c) The Administrator may specify changes to the provisions of paragraph (a) of this section that are necessary to comply with the general provisions of § 94.102.

[68 FR 9785, Feb. 28, 2003, as amended at 70 FR 40458, July 13, 2005]

Subpart C—Certification Provisions

§ 94.201 Applicability.

(a) The requirements of this subpart are applicable to manufacturers of engines subject to the standards of subpart A of this part.

(b) In a given model year, you may ask us to approve the use of procedures for certification, labeling, reporting and recordkeeping, or other administrative requirements specified in 40 CFR part 1042 or 1068 instead of the comparable procedures specified in this part 94. We may approve the request as long as it does not prevent us from ensuring that you fully comply with the intent of this part.

[73 FR 59184, Oct. 8, 2008]

§ 94.202 Definitions.

The definitions of subpart A of this part apply to this subpart.

§ 94.203 Application for certification.

(a) For each engine family that complies with all applicable standards and requirements, the manufacturer shall submit to the Administrator a completed application for a certificate of conformity.

(b) The application shall be approved and signed by the authorized representative of the manufacturer.

(c) The application shall be updated and corrected by amendment, where necessary, as provided for in § 94.210 to accurately reflect the manufacturer's production.

(d) Each application shall include all the following information:

(1)(i) A description of the basic engine design, including but not limited to, the engine family specifications, the provisions of which are contained in § 94.204.

(ii) A list of distinguishable configurations to be included in the engine family.

(2) An explanation of how the emission control system operates, including detailed descriptions of:

(i) All emission control system components;

(ii) The injection timing map or maps (i.e., degrees before or after top-dead-center), and any functional dependence of such timing on other operational parameters (e.g., engine coolant temperature or engine speed);

(iii) Each auxiliary emission control device (AECD); and

(iv) All fuel system components to be installed on any production or test engine(s).

(3) A description of the test engine.

(4) Special or alternate test procedures, if applicable.

(5) A description of the operating cycle and the period of operation necessary to accumulate service hours on the test engine and stabilize emission levels.

(6) A description of all adjustable operating parameters (e.g., injection timing and fuel rate), including all the following:

(i) The nominal or recommended setting and the associated production tolerances.

(ii) The physically adjustable range (Note: if this is different than the intended adjustable range, describe why these are different).

(iii) The limits or stops used to limit adjustable ranges.

(iv) Production tolerances of the limits or stops used to establish each physically adjustable range.

(v) Information relating to the reason that the physical limits or stops used to establish the physically adjustable range of each parameter, or any other means used to inhibit adjustment, are the most effective means possible of preventing adjustment of parameters to settings outside the manufacturer's specified adjustable ranges on in-use engines.

(7) For families participating in the averaging, banking, and trading program, the information specified in subpart D of this part.

(8) Projected U.S.-directed production volume information for each configuration.

(9) A description of the test equipment and fuel used.

(10) All test data obtained by the manufacturer on each test engine, including CO_2 and CH_4 as specified in 40 CFR 89.407(d)(1) and § 94.103(c) for Category 1 engines, § 94.104(e) for Category 2 engines, and § 94.109(d) for Category 3 engines. Small-volume manufacturers may omit measurement and reporting of CH_4.

(11) The intended useful life period for the engine family, in accordance with § 94.9(a).

(12) The intended deterioration factors for the engine family, in accordance with § 94.218.

(13) All information required for EPA to interpret all messages and parameters broadcast on an engine's controller area network, including but not limited to message or parameter identification, scaling, limit, offset, and transfer function. (The manufacturer may reference publicly released controller area network standards where applicable. The format of this information shall be provided in a format similar to publicly released documents pertaining to controller area network standards.)

(14) (i) For Category 1 and Category 2 engines, a statement that the all the engines included in the engine family comply with the Not To Exceed standards specified in § 94.8(e) when operated under all conditions which may reasonably be expected to be encountered in normal operation and use; the manufacturer also must provide a detailed description of all testing, engineering analyses, and other information which provides the basis for this statement.

(ii) [Reserved]

(15) An unconditional statement certifying that all engines included in the engine family comply with all requirements of this part and the Clean Air Act.

(16) A statement indicating duty-cycle and application of the engine (e.g., used to propel planing vessels, use to propel vessels with variable-pitch propellers, constant-speed auxiliary, recreational, etc.).

(e) At the Administrator's request, the manufacturer shall supply such additional information as may be required to evaluate the application.

(f)(1) If the manufacturer submits some or all of the information specified in paragraph (d) of this section in advance of its full application for certification, the Administrator shall review the information and make the determinations required in § 94.208 (d) within 90 days of the manufacturer's submittal.

(2) The 90-day decision period is exclusive of any elapsed time during which EPA is waiting for additional information requested from a manufacturer regarding an adjustable parameter (the 90-day period resumes upon receipt of the manufacturer's response). For example, if EPA requests additional information 30 days after the manufacturer submits information under paragraph (f)(1) of this section, then the Administrator would make a determination within 60 days of the receipt of the requested information from the manufacturer.

(g)(1) The Administrator may modify the information submission requirements of paragraph (d) of this section, provided that all of the information specified therein is maintained by the manufacturer as required by § 94.215, and amended, updated, or corrected as necessary.

(2) For the purposes of this paragraph (g), § 94.215 includes all information specified in paragraph (d) of this section, whether or not such information is actually submitted to the Administrator for any particular model year.

(3) The Administrator may review a manufacturer's records at any time. At the Administrator's discretion, this review may take place either at the manufacturer's facility or at another facility designated by the Administrator.

[64 FR 73331, Dec. 29, 1999, as amended at 67 FR 68346, Nov. 8, 2002; 68 FR 9785, Feb. 28, 2003; 74 FR 56374, Oct. 30, 2009]

§ 94.204 Designation of engine families.

This section specifies the procedure and requirements for grouping of engines into engine families.

(a) Manufacturers shall divide their engines into groupings of engines which are expected to have similar emission characteristics throughout their useful life. Each group shall be defined as a separate engine family.

(b) For Category 1 marine engines, the following characteristics distinguish engine families:

(1) Fuel;

(2) Cooling method (including cooling medium);

(3) Method of air aspiration;

(4) Method of exhaust aftertreatment (for example, catalytic converter or particulate trap);

(5) Combustion chamber design;

(6) Bore;

(7) Stroke;

(8) Number of cylinders, (engines with aftertreatment devices only);

(9) Cylinder arrangement (engines with aftertreatment devices only);

(10) Fuel system configuration; and

(11) Class (commercial or recreational).

(c) For Category 2 marine engines, the following characteristics distinguish engine families:

(1) The combustion cycle (e.g., diesel cycle);

(2) The type of engine cooling employed (air-cooled or water-cooled), and procedure(s) employed to maintain engine temperature within desired limits (thermostat, on-off radiator fan(s), radiator shutters, etc.);

(3) The bore and stroke dimensions;

(4) The approximate intake and exhaust event timing and duration (valve or port);

(5) The location of the intake and exhaust valves (or ports);

(6) The size of the intake and exhaust valves (or ports);

(7) The overall injection, or as appropriate ignition, timing characteristics (i.e., the deviation of the timing curves from the optimal fuel economy timing curve must be similar in degree);

(8) The combustion chamber configuration and the surface-to-volume ratio of the combustion chamber when the piston is at top dead center position, using nominal combustion chamber dimensions;

(9) The location of the piston rings on the piston;

(10) The method of air aspiration (turbocharged, supercharged, naturally aspirated, Roots blown);

(11) The turbocharger or supercharger general performance characteristics (e.g., approximate boost pressure, approximate response time, approximate size relative to engine displacement);

(12) The type of air inlet cooler (air-to-air, air-to-liquid, approximate degree to which inlet air is cooled);

(13) The intake manifold induction port size and configuration;

(14) The type of fuel and fuel system configuration;

(15) The configuration of the fuel injectors and approximate injection pressure;

(16) The type of fuel injection system controls (i.e., mechanical or electronic);

(17) The type of smoke control system;

(18) The exhaust manifold port size and configuration; and

(19) The type of exhaust aftertreatment system (oxidation catalyst, particulate trap), and characteristics of the aftertreatment system (catalyst loading, converter size vs engine size).

(d) Upon request by the manufacturer, engines that are eligible to be included in the same engine family based on the criteria in paragraph (b) or (c) of this section may be divided into different engine families. This request must be accompanied by information the manufacturer believes supports the use of these different engine families.

(e) Upon request by the manufacturer, the Administrator may allow engines that would be required to be grouped into separate engine families based on the criteria in paragraph (b) or (c) of this section to be grouped into a single engine family if the manufacturer demonstrates that the engines will have similar emission characteristics; however, recreational and commercial engines may not be grouped in the same engine family. This request must be accompanied by emission information supporting the appropriateness of such combined engine families.

(f) Category 3 engines shall be grouped into engine families based on the criteria specified in Section 4.3 of the Annex VI Technical Code (incorporated by reference in § 94.5), except as allowed in paragraphs (d) and (e) of this section.

[64 FR 73331, Dec. 29, 1999, as amended at 67 FR 68346, Nov. 8, 2002; 68 FR 9785, Feb. 28, 2003]

§ 94.205 Prohibited controls, adjustable parameters.

(a) Any system installed on, or incorporated in, a new engine to enable the engine to conform to the standards contained in this part:

(1) Shall not cause a violation of the general standards of § 94.7.

(2) Shall function during all in-use operation, except as otherwise allowed by this part.

(b)(1) Category 1 marine engines equipped with adjustable parameters must comply with all requirements of this subpart for any adjustment in the physically adjustable range.

(2) Category 2 and Category 3 marine engines equipped with adjustable parameters must comply with all requirements of this subpart for any adjustment in the approved adjustable range.

(c) The Administrator may require that adjustable parameters be set to any specification within its adjustable range for certification, selective enforcement audit, or in-use testing to determine compliance with the requirements of this subpart.

(d) In specifying the adjustable range of each adjustable parameter on a new engine, the manufacturer, shall:

(1) Ensure that safe engine operating characteristics are available within that range, as required by section 202(a)(4) of the Clean Air Act, taking into consideration the production tolerances; and

(2) To the maximum extent practicable, limit the physical range of adjustability to that which is necessary for proper operation of the engine.

(e) Tier 1 Category 3 marine engines shall be adjusted according to the manufacturer's specifications for testing.

(f) For Category 3 marine engines, manufacturers must specify in the maintenance instructions how to adjust the engines to achieve emission performance equivalent to the performance demonstrated under the certification test conditions. This must address all necessary adjustments, including those required to address differences in fuel quality or ambient temperatures. For example, equivalent emissions performance can be measured relative to optimal engine performance that could be achieved in the absence of emission standards (*i.e.*, the calibration that result in the lowest fuel consumption and/or maximum firing pressure). In this example, adjustments that achieved the same percent reduction in NO_X emissions from the optimal calibration would be considered to be equivalent. Alternatively, if the engine uses injection timing retard and EGR to reduce emissions, then retarding timing the same number of degrees (relative to optimal engine performance) and using the same rate of EGR at the different conditions would be considered to be equivalent.

[64 FR 73331, Dec. 29, 1999, as amended at 68 FR 9785, Feb. 28, 2003]

§ 94.206 Required information.

(a) The manufacturer shall perform the tests required by the applicable test procedures, and submit to the Administrator the information required by this section: *Provided*, that if requested by the manufacturer, the Administrator may waive any requirement of this section for testing of engines for which the required emission data are otherwise available.

(b) The manufacturer shall submit exhaust emission deterioration factors, with supporting data. The determination of the deterioration factors shall be conducted in accordance with § 94.218 to ensure that the engines covered by a certificate issued under § 94.208 will meet all of the emission standards in § 94.8 in use for the useful life of the engine.

(c) The manufacturer shall submit emission data on such engines tested in accordance with the applicable test procedures of Subpart B of this part. These data shall include zero hour data, if generated. In lieu of providing the emission data required by paragraph (a) of this section, the Administrator may, upon request by the manufacturer, allow the manufacturer to demonstrate (on the basis of previous emission tests, development tests, or other testing information) that the engine will conform with the applicable emission standards of § 94.8.

(d) The manufacturer shall submit a statement that the engines for which certification is requested conform to the requirements in § 94.7 and that the descriptions of tests performed to ascertain compliance with the general standards in § 94.7, and the data derived from such tests, are available to the Administrator upon request.

(e) The manufacturer shall submit a statement that the emission data engine used to demonstrate compliance with the applicable standards of this part is in all material respects as described in the manufacturer's application for certification; that it has been tested in accordance with the applicable test procedures utilizing the fuels

and equipment described in the application for certification; and that on the basis of such tests, the engine family conforms to the requirements of this part. If, on the basis of the data supplied and any additional data as required by the Administrator, the Administrator determines that the test engine was not as described in the application for certification or was not tested in accordance with the applicable test procedures utilizing the fuels and equipment as described in the application for certification, the Administrator may make the determination that the engine does not meet the applicable standards. If the Administrator makes such a determination, he/she may withhold, suspend, or revoke the certificate of conformity under § 94.208 (c)(3)(i).

§ 94.207 Special test procedures.

(a) *Establishment of special test procedures by EPA*. The Administrator may, on the basis of written application by a manufacturer, establish special test procedures other than those set forth in this part, for any engine that the Administrator determines is not susceptible to satisfactory testing under the specified test procedures set forth in Subpart B of this part.

(b) *Use of alternate test procedures by a manufacturer*. (1) A manufacturer may elect to use an alternate test procedure, provided that it is equivalent to the specified procedures with respect to the demonstration of compliance, its use is approved in advance by the Administrator, and the basis for the equivalence with the specified test procedures is fully described in the manufacturer's application.

(2) The Administrator may reject data generated under alternate test procedures if the data do not correlate with data generated under the specified procedures.

§ 94.208 Certification.

(a) If, after a review of the application for certification, test reports and data acquired from an engine or from a development data engine, and any other information required or obtained by EPA, the Administrator determines that the application is complete and that the engine family meets the requirements of the Act and this part, he/she will issue a certificate of conformity with respect to such engine family, except as provided by paragraph (c)(3) of this section. The certificate of conformity is valid for each engine family starting with the indicated effective date, but it is not valid for any production after December 31 of the model year for which it is issued. The certificate of conformity is valid upon such terms and conditions as the Administrator deems necessary or appropriate to ensure that the production engines covered by the certificate will meet the requirements of the Act and of this part.

(b) [Reserved]

(c)(1) The manufacturer shall bear the burden of establishing to the satisfaction of the Administrator that the conditions upon which the certificates were issued were satisfied or excused.

(2) The Administrator will determine whether the test data included in the application represents all engines of the engine family.

(3) Notwithstanding the fact that any engine(s) may comply with other provisions of this subpart, the Administrator may withhold or deny the issuance of any certificate of conformity, or suspend or revoke any such certificate(s) which has (have) been issued with respect to any such engine(s) if:

(i) The manufacturer submits false or incomplete information in its application for certification thereof;

(ii) The manufacturer renders inaccurate any test data which it submits pertaining thereto or otherwise circumvents the intent of the Act, or of this part with respect to such engine;

(iii) Any EPA Enforcement Officer is denied access on the terms specified in § 94.215 to any facility or portion thereof which contains any of the following:

(A) An engine which is scheduled to undergo emissions testing, or which is undergoing emissions testing, or which has undergone emissions testing; or

(B) Any components used or considered for use in the construction, modification or buildup of any engine which is scheduled to undergo emissions testing, or which is undergoing emissions

testing, or which has undergone emissions testing for purposes of emissions certification; or

(C) Any production engine which is or will be claimed by the manufacturer to be covered by the certificate; or

(D) Any step in the construction of the engine; or

(E) Any records, documents, reports or histories required by this part to be kept concerning any of the items listed in paragraphs (c)(3)(iii)(A) through (D) of this section; or

(iv) Any EPA Enforcement Officer is denied ''reasonable assistance'' (as defined in § 94.215).

(4) In any case in which a manufacturer knowingly submits false or inaccurate information or knowingly renders inaccurate or invalid any test data or commits any other fraudulent acts and such acts contribute substantially to the Administrator's decision to issue a certificate of conformity, the Administrator may deem such certificate void ab initio.

(5) In any case in which certification of an engine is to be withheld, denied, revoked or suspended under paragraph (c)(3) of this section, and in which the Administrator has presented to the manufacturer involved reasonable evidence that a violation of § 94.215 in fact occurred, the manufacturer, if it wishes to contend that, even though the violation occurred, the engine in question was not involved in the violation to a degree that would warrant withholding, denial, revocation or suspension of certification under paragraph (c)(3) of this section, shall have the burden of establishing that contention to the satisfaction of the Administrator.

(6) Any revocation, suspension, or voiding of certification under paragraph (c)(3) of this section shall:

(i) Be made only after the manufacturer concerned has been offered an opportunity for a hearing conducted in accordance with § 94.216; and

(ii) Extend no further than to forbid the introduction into commerce of engines previously covered by the certification which are still in the hands of the manufacturer, except in cases of such fraud or other misconduct that makes the certification invalid ab initio.

(7) The manufacturer may request, within 30 days of receiving notification, that any determination made by the Administrator under paragraph (c)(3) of this section to withhold or deny certification be reviewed in a hearing conducted in accordance with § 94.216. The request shall be in writing, signed by an authorized representative of the manufacturer and shall include a statement specifying the manufacturer's objections to the Administrator's determinations, and data in support of such objections. If the Administrator finds, after a review of the request and supporting data, that the request raises a substantial factual issue, he/she will grant the request with respect to such issue.

(d) In approving an application for certification, the Administrator may specify or require the manufacturer to specify:

(1) A broader range of adjustability than recommended by the manufacturer for those engine parameters which are subject to adjustment, if the Administrator determines that it is not reasonable to expect the parameter to be kept adjusted within the recommended range in use;

(2) A longer useful life period, if the Administrator determines that the useful life of the engines in the engine family, as defined in § 94.2, is longer than the period specified by the manufacturer;

(3) Larger deterioration factors, if the Administrator determines that the deterioration factors specified by the manufacturer do not meet the requirements of § 94.218; and/or

(4) A broader Not to Exceed Zone subject to the provisions of § 94.106(b).

(e) Within 30 days following receipt of notification of the Administrator's determinations made under paragraph (d) of this section, the manufacturer may request a hearing on the Administrator's determinations. The request shall be in writing, signed by an authorized representative of the manufacturer and shall include a statement specifying the manufacturer's objections to the Administrator's determinations and data in support of such objections. If, after review of the request and supporting data, the Administrator finds that the request raises a

substantial factual issue, the manufacturer shall be provided with a hearing in accordance with § 94.216 with respect to such issue.

[64 FR 73331, Dec. 29, 1999, as amended at 73 FR 37196, June 30, 2008]

§ 94.209 Special provisions for post-manufacture marinizers and small-volume manufacturers.

The provisions of this section apply for Category 1 and Category 2 engines, but not for Category 3 engines.

(a) *Broader engine families.* Instead of the requirements of § 94.204, an engine family may consist of any or all of a manufacturer's engines within a given category. This does not change any of the requirements of this part for showing that an engine family meets emission standards. To be eligible to use the provisions of this paragraph (a), the manufacturer must demonstrate one of the following:

(1) It is a post-manufacture marinizer and that the base engines used for modification have a valid certificate of conformity issued under 40 CFR part 89 or 40 CFR part 92 or the heavy-duty engine provisions of 40 CFR part 86.

(2) It is a small-volume manufacturer.

(b) *Hardship relief.* Post-manufacture marinizers, small-volume manufacturers, and small-volume boat builders may take any of the otherwise prohibited actions identified in § 94.1103(a)(1) if approved in advance by the Administrator, subject to the following requirements:

(1) Application for relief must be submitted to the Designated Officer in writing prior to the earliest date in which the applying manufacturer would be in violation of § 94.1103. The manufacturer must submit evidence showing that the requirements for approval have been met.

(2) The conditions causing the impending violation must not be substantially the fault of the applying manufacturer.

(3) The conditions causing the impending violation must jeopardize the solvency of the applying manufacturer if relief is not granted.

(4) The applying manufacturer must demonstrate that no other allowances under this part will be available to avoid the impending violation.

(5) Any relief may not exceed one year beyond the date relief is granted.

(6) The Administrator may impose other conditions on the granting of relief including provisions to recover the lost environmental benefit.

(7) The manufacturer must add a permanent, legible label, written in block letters in English, to a readily visible part of each engine exempted under this paragraph (b).

This label must include at least the following items:

(i) The label heading ''EMISSION CONTROL INFORMATION''.

(ii) Your corporate name and trademark.

(iii) Engine displacement (in liters), rated power, and model year of the engine or whom to contact for further information.

(iv) The statement ''THIS ENGINE IS EXEMPT UNDER 40 CFR 94.209(b) FROM EMISSION STANDARDS AND RELATED REQUIREMENTS.''.

(c) *Extension of deadlines.* Small-volume manufacturers may use the provisions of 40 CFR 1068.250 to ask for an extension of a deadline to meet emission standards. We may require that you use available base engines that have been certified to emission standards for land-based engines until you are able to produce engines certified to the requirements of this part.

[67 FR 68346, Nov. 8, 2002, as amended at 68 FR 9786, Feb. 28, 2003; 73 FR 37196, June 30, 2008]

§ 94.210 Amending the application and certificate of conformity.

(a) The manufacturer shall notify the Administrator when changes to information required to be described in the application for certification are to be made to a product line covered by a certificate of conformity. This notification shall include a request to amend the application or the existing certificate of conformity. Except as provided in paragraph (e) of this section, no manufacturer shall make said changes or produce said engines prior to receiving approval from the Administrator.

(b) A manufacturer's request to amend the application or the existing

certificate of conformity shall include the following information:

(1) A full description of the change to be made in production, or of the engines to be added;

(2) Engineering evaluations or data showing that the engines as modified or added will comply with all applicable emission standards; and

(3) A determination whether the manufacturer's original test fleet selection is still appropriate, and if the original test fleet selection is determined not to be appropriate, test fleet selection(s) representing the engines changed or added which would have been required if the engines had been included in the original application for certification.

(c) The Administrator may require the manufacturer to perform tests on the engine representing the engine to be added or changed.

(d)(1) Based on the description of the amendment and data derived from such testing as the Administrator may require or conduct, the Administrator will determine whether the change or addition would still be covered by the certificate of conformity then in effect.

(2) If the Administrator determines that the change or new engine(s) meets the requirements of this part and the Act, the appropriate certificate of conformity shall be amended.

(3) If the Administrator determines that the changed engine(s) does not meet the requirements of this part and the Act, the certificate of conformity will not be amended. The Administrator shall provide a written explanation to the manufacturer of the decision not to amend the certificate. The manufacturer may request a hearing on a denial.

(e) A manufacturer may make changes in or additions to production engines concurrently with the notification to the Administrator, as required by paragraph (a) of this section, if the manufacturer complies with the following requirements:

(1) In addition to the information required in paragraph (b) of this section, the manufacturer shall supply supporting documentation, test data, and engineering evaluations as appropriate to demonstrate that all affected engines will still meet applicable emission standards.

(2) If, after a review, the Administrator determines additional testing is required, the manufacturer shall provide the required test data within 30 days or cease production of the affected engines.

(3) If the Administrator determines that the affected engines do not meet applicable requirements, the Administrator will notify the manufacturer to cease production of the affected engines and to recall and correct at no expense to the owner all affected engines previously produced.

(4) Election to produce engines under this paragraph (e) will be deemed to be a consent to recall all engines that the Administrator determines do not meet applicable standards and to cause such nonconformity to be remedied at no expense to the owner.

§ 94.211 Emission-related maintenance instructions for purchasers.

(a) The manufacturer shall furnish or cause to be furnished to the ultimate purchaser of each new engine, subject to the standards prescribed in § 94.8, written instructions for the proper maintenance and use of the engine as are reasonable and necessary to assure the proper functioning of the emissions control system, consistent with the applicable provisions of paragraph (b) of this section.

(1) The maintenance and use instructions required by this section shall be clear and easily understandable.

(2) The maintenance instructions required by this section shall contain a general description of the documentation that would demonstrate for warranty purposes that the ultimate purchaser or any subsequent owner had complied with the instructions.

(3) For Category 3 engines, the manufacturer must provide in boldface type on the first page of the written maintenance instructions notice that § 94.1004 requires that the emissions-related maintenance be performed as specified in the instructions (or equivalent).

(b)(1) The manufacturer must provide in boldface type on the first page of the written maintenance instructions notice that maintenance, replacement, or repair of the emission control devices

and systems may be performed by any engine repair establishment or individual.

(2) The instructions under paragraph (b)(1) of this section will not include any condition on the ultimate purchaser's or owner's using, in connection with such engine, any component or service (other than a component or service provided without charge under the terms of the purchase agreement) which is identified by brand, trade, or corporate name. Such instructions also will not directly or indirectly distinguish between service performed by any other service establishments with which such manufacturer has a commercial relationship and service performed by independent vessel or engine repair facilities with which such manufacturer has no commercial relationship.

(3) The prohibition of paragraph (b)(2) of this section may be waived by the Administrator if:

(i) The manufacturer demonstrates to the Administrator's satisfaction that the engine will function properly only if the component or service so identified is used in connection with such engine; and

(ii) The Administrator finds that such a waiver is in the public interest.

(c) The manufacturer shall provide to the Administrator, no later than the time of the submission required by § 94.203, a copy of the emission-related maintenance instructions that the manufacturer proposes to supply to the ultimate purchaser or owner in accordance with this section. The Administrator will review such instructions to determine whether they are reasonable and necessary to ensure the proper functioning of the engine's emission control systems. If the Administrator determines that such instructions are not reasonable and necessary to ensure the proper functioning of the emission control systems, he/she may disapprove the application for certification or may require that the manufacturer modify the instructions.

(d) Any revision to the maintenance instructions which will affect emissions shall be supplied to the Administrator at least 30 days before being supplied to the ultimate purchaser or owner unless the Administrator consents to a lesser period of time, and is subject to the provisions of § 94.210.

(e) This paragraph (e) specifies emission-related scheduled maintenance for purposes of obtaining durability data for marine engines. The maintenance intervals specified in this paragraph are minimum intervals.

(1) All emission-related scheduled maintenance for purposes of obtaining durability data must occur at the same or longer hours of use intervals as those specified in the manufacturer's maintenance instructions furnished to the ultimate purchaser of the engine under paragraph (a) of this section. This maintenance schedule may be updated as necessary throughout the testing of the engine, provided that no maintenance operation is deleted from the maintenance schedule after the operation has been performed on the test equipment or engine.

(2) Any emission-related maintenance which is performed on equipment, engines, subsystems, or components must be technologically necessary to ensure in-use compliance with the emission standards. The manufacturer must submit data which demonstrate to the Administrator that all of the emission-related scheduled maintenance which is to be performed is technologically necessary. Scheduled maintenance must be approved by the Administrator prior to being performed or being included in the emission-related maintenance instructions provided to the purchasers under paragraph (a) of this section.

(i) The Administrator may require longer maintenance intervals than those listed in paragraphs (e)(3) and (e)(4) of this section where the listed intervals are not technologically necessary.

(ii) The Administrator may allow manufacturers to specify shorter maintenance intervals than those listed in paragraphs (e)(3) and (e)(4) of this section where technologically necessary for Category 2 engines.

(iii) The maintenance intervals listed in paragraphs (e)(3) and (e)(4) of this section do not apply for Category 3.

(3) The adjustment, cleaning, repair, or replacement of items listed in paragraphs (e)(3)(i) through (e)(3)(iii) of this

section shall occur at 1,500 hours of use and at 1,500-hour intervals thereafter.

(i) Exhaust gas recirculation system-related filters and coolers.

(ii) Positive crankcase ventilation valve.

(iii) Fuel injector tips (cleaning only).

(4) The adjustment, cleaning and repair of items in paragraphs (e)(4)(i) through (e)(4)(vii) of this section shall occur at 3,000 hours of use and at 3,000-hour intervals thereafter for engines with per-cylinder displacement less than 1.2 liters, or at 4,500-hour intervals thereafter for engines with per-cylinder displacement greater than or equal to 1.2 liters.

(i) Fuel injectors.

(ii) Turbocharger.

(iii) Electronic engine control unit and its associated sensors and actuators.

(iv) Particulate trap or trap-oxidizer system (including related components).

(v) Exhaust gas recirculation system (including all related control valves and tubing), except as otherwise provided in paragraph (e)(3)(i) of this section.

(vi) Catalytic convertor.

(vii) Any other add-on emission-related component (*i.e.,* a component whose sole or primary purpose is to reduce emissions or whose failure will significantly degrade emission control and whose function is not integral to the design and performance of the engine).

(f) Scheduled maintenance not related to emissions which is reasonable and technologically necessary (*e.g.,* oil change, oil filter change, fuel filter change, air filter change, cooling system maintenance, adjustment of idle speed, governor, engine bolt torque, valve lash, injector lash, timing, lubrication of the exhaust manifold heat control valve, etc.) may be performed on durability engines at the least frequent intervals recommended by the manufacturer to the ultimate purchaser, (*e.g.,* not the intervals recommended for severe service).

(g) Adjustment of engine idle speed on emission data engines may be performed once before the low-hour emission test point. Any other engine, emission control system, or fuel system adjustment, repair, removal, disassembly, cleaning, or replacement on emission data vehicles shall be performed only with advance approval of the Administrator.

(h) For Category 1 and Category 2 engines, equipment, instruments, or tools may not be used to identify malfunctioning, maladjusted, or defective engine components unless the same or equivalent equipment, instruments, or tools will be available to dealerships and other service outlets and are:

(1) Used in conjunction with scheduled maintenance on such components; or

(2) Used subsequent to the identification of an engine malfunction, as provided in paragraph (e) of this section for emission data engines; or

(3) Specifically authorized by the Administrator.

(i) All test data, maintenance reports, and required engineering reports shall be compiled and provided to the Administrator in accordance with § 94.215.

(j)(1) The components listed in paragraphs (j)(1)(i) through (j)(1)(vi) of this section are defined as critical emission-related components.

(i) Catalytic convertor.

(ii) Electronic engine control unit and its associated sensors and actuators.

(iii) Exhaust gas recirculation system (including all related filters, coolers, control valves, and tubing).

(iv) Positive crankcase ventilation valve.

(v) Particulate trap or trap-oxidizer system.

(vi) Any other add-on emission-related component (i.e., a component whose sole or primary purpose is to reduce emissions or whose failure will significantly degrade emission control and whose function is not integral to the design and performance of the engine).

(2) All critical emission-related scheduled maintenance must have a reasonable likelihood of being performed in use. For Category 1 and Category 2 engines, the manufacturer must show the reasonable likelihood of such maintenance being performed in-use. Critical emission-related scheduled maintenance items which satisfy

one of the conditions defined in paragraphs (j)(2)(i) through (j)(2)(vi) of this section will be accepted as having a reasonable likelihood of being performed in use.

(i) Data are presented which establish for the Administrator a connection between emissions and engine performance such that as emissions increase due to lack of maintenance, vehicle performance will simultaneously deteriorate to a point unacceptable for typical operation.

(ii) Survey data are submitted which adequately demonstrate to the Administrator with an 80 percent confidence level that 80 percent of such engines already have this critical maintenance item performed in-use at the recommended interval(s).

(iii) A clearly displayed visible signal system approved by the Administrator is installed to alert the equipment operator that maintenance is due. A signal bearing the message ''maintenance needed'' or ''check engine,'' or a similar message approved by the Administrator, shall be actuated at the appropriate usage point or by component failure. This signal must be continuous while the engine is in operation and not be easily eliminated without performance of the required maintenance. Resetting the signal shall be a required step in the maintenance operation. The method for resetting the signal system shall be approved by the Administrator. The system must not be designed to deactivate upon the end of the useful life of the engine or thereafter.

(iv) A manufacturer may desire to demonstrate through a survey that a critical maintenance item is likely to be performed without a visible signal on a maintenance item for which there is no prior in-use experience without the signal. To that end, the manufacturer may in a given model year market up to 200 randomly selected engines per critical emission-related maintenance item without such visible signals, and monitor the performance of the critical maintenance item by the owners to show compliance with paragraph (j)(2)(ii) of this section. This option is restricted to two consecutive model years and may not be repeated until any previous survey has been completed. If the critical maintenance involves more than one engine family, the sample will be sales weighted to ensure that it is representative of all the families in question.

(v) The manufacturer provides the maintenance free of charge, and clearly informs the customer that the maintenance is free in the instructions provided under paragraph (a) of this section.

(vi) The manufacturer uses any other method which the Administrator approves as establishing a reasonable likelihood that the critical maintenance will be performed in-use.

(3) Visible signal systems used under paragraph (j)(2)(iii) of this section are considered an element of design of the emission control system. Therefore, disabling, resetting, or otherwise rendering such signals inoperative without also performing the indicated maintenance procedure is a prohibited act.

(k) For Category 3 engines, the manufacturer must provide the ultimate purchaser with a Technical File meeting the specifications of section 2.4 of the Annex VI Technical Code (incorporated by reference in §94.5). The maintenance instructions required by this part to be provided by manufacturer may be included in this Technical File. The manufacturer must provide a copy of this Technical File to EPA upon request.

(l) Owners and operators of Category 3 engines shall transfer the maintenance instructions to subsequent owners and operators of the engine upon sale or transfer of the engine or vessel.

[64 FR 73331, Dec. 29, 1999, as amended at 68 FR 9786, Feb. 28, 2003; 70 FR 40458, July 13, 2005]

§94.212 Labeling.

(a) *General requirements.* (1) Each new engine covered by a certificate of conformity under §94.208 shall be labeled by the manufacturer in the manner described in this paragraph (b) of this section at the time of manufacture.

(2) Each new marine engine modified from a base engine by post-manufacture marinizers in accordance with the provisions of §94.209 (b) and covered by a certificate of conformity under §94.208 shall be labeled by the PMM in

the manner described in paragraph (b) of this section.

(b) *Engine labels.* Engine labels meeting the specifications of this section shall be applied to every engine by the manufacturer at the point of original manufacture. Engine labels shall be permanent and legible and shall be affixed to the engine in a position in which it will be readily visible after installation of the engine in the vessel. The label shall be attached to an engine part necessary for normal operation and not normally requiring replacement during the useful life of the engine. The label shall be affixed by the manufacturer in such manner that it cannot be removed without destroying or defacing the label. The label shall not be affixed to any equipment which is easily detached from such engine. The label may be not be made up of more than one piece without the advance approval of the Administrator. The label shall contain the following information lettered in the English language in block letters and numerals, which shall be of a color that contrasts with the background of the label:

(1) The label heading: Marine Engine Emission Control Information.

(2) Full corporate name and trademark of the manufacturer.

(3) The model year.

(4) The per-cylinder displacement of the engine.

(5) Engine family and configuration identification.

(6) A prominent unconditional statement of compliance with U.S. Environmental Protection Agency regulations that apply to marine compression-ignition engines.

(7) The useful life of the engine, unless the applicable useful life is based on the provisions of § 94.9(a)(1).

(8) The standards and/or FELs to which the engine was certified.

(9) Engine tune-up specifications and adjustments, as recommended by the manufacturer in accordance with the applicable emission standards, including but not limited to idle speeds(s), injection timing, valve lash (as applicable), as well as other parameters deemed necessary by the manufacturer.

(10) The application for which the engine family is certified. (For example: constant-speed auxiliary, variable-speed propulsion engines used with fixed-pitch propellers, recreational, etc.)

(c) The provisions of this section shall not prevent a manufacturer from also providing on the label any other information that such manufacturer deems necessary for, or useful to, the proper operation and satisfactory maintenance of the vessel or engine.

(d) Engines certified under the voluntary standards described in § 94.8(f) to be designated as Blue Sky Series engines must contain the statement on the label: ''Blue Sky Series''.

(e) If an engine can be modified to operate on residual fuel, but has not been certified to meet the standards on such a fuel, it must contain the statement on the label: ''THIS ENGINE IS CERTIFIED FOR OPERATION ONLY WITH DISTILLATE DIESEL FUEL. MODIFYING THE ENGINE TO OPERATE ON RESIDUAL FUEL MAY BE A VIOLATION OF FEDERAL LAW SUBJECT TO CIVIL PENALTIES.'' The Administrator may approve alternate language.

[64 FR 73331, Dec. 29, 1999, as amended at 67 FR 68346, Nov. 8, 2002; 70 FR 40459, July 13, 2005]

§ 94.213 Submission of engine identification numbers.

(a) Upon request of the Administrator, the manufacturer of any engine covered by a certificate of conformity shall, within 30 days of receipt of such request, identify by engine identification number, the engines covered by the certificate of conformity.

(b) The manufacturer of any engines covered by a certificate of conformity shall provide to the Administrator, within 60 days of the issuance of a certificate of conformity, an explanation of the elements in any engine identification coding system in sufficient detail to enable the Administrator to identify those engines which are covered by a certificate of conformity.

§ 94.214 Production engines.

Any manufacturer obtaining certification under this part shall supply to

the Administrator, upon his/her request, a reasonable number of production engines, as specified by the Administrator. The engines shall be representative of the engines, emission control systems, and fuel systems offered and typical of production engines available for sale or use under the certificate. These engines shall be supplied for testing at such time and place and for such reasonable periods as the Administrator may require. This requirement does not apply for Category 3 engines. Manufacturers of Category 3 engines, however, must allow EPA access to test engines and development engines to the extent necessary to determine that the engine family is in full compliance with the applicable requirements of this part.

[68 FR 9786, Feb. 28, 2003]

§ 94.215 Maintenance of records; submittal of information; right of entry.

(a) Any manufacturer subject to any of the standards or procedures prescribed in this subpart shall establish, maintain and retain the following adequately organized and indexed records:

(1) General records. The records required to be maintained by this paragraph (a) shall consist of:

(i) Identification and description of all certification engines for which testing is required under this subpart.

(ii) A description of all emission control systems which are installed on or incorporated in each certification engine.

(iii) A description of all procedures used to test each such certification engine.

(iv) A copy of all applications for certification, filed with the Administrator.

(2) Individual records. (i) A brief history of each engine used for certification under this subpart including:

(A) In the case where a current production engine is modified for use as a certification engine, a description of the process by which the engine was selected and of the modifications made. In the case where the certification engine is not derived from a current production engine, a general description of the buildup of the engine (*e.g.*, whether experimental heads were cast and machined according to supplied drawings). In the cases in the previous two sentences, a description of the origin and selection process for fuel system components, ignition system components (as applicable), intake air pressurization and cooling system components, cylinders, pistons and piston rings, exhaust smoke control system components, and exhaust aftertreatment devices as applicable, shall be included. The required descriptions shall specify the steps taken to assure that the certification engine, with respect to its engine, drivetrain, fuel system, emission control system components, exhaust aftertreatment devices, or any other devices or components as applicable, that can reasonably be expected to influence exhaust emissions will be representative of production engines and that either: all components and/or engine, construction processes, component inspection and selection techniques, and assembly techniques employed in constructing such engines are reasonably likely to be implemented for production engines; or that they are as close as practicable to planned construction and assembly process.

(B) A complete record of all emission tests performed (except tests performed by EPA directly), including test results, the date and purpose of each test, and the number of hours accumulated on the engine.

(C) A record and description of all maintenance and other servicing performed, giving the date of the maintenance or service and the reason for it.

(D) A record and description of each test performed to diagnose engine or emission control system performance, giving the date and time of the test and the reason for it.

(E) A brief description of any significant events affecting the engine during the period covered by the history and not described by an entry under one of the previous headings, including such extraordinary events as accidents involving the engine or dynamometer runaway.

(ii) Each such history shall be started on the date that the first of any of the selection or buildup activities in paragraph (a)(2)(i)(A) of this section occurred with respect to the certification

engine and shall be kept in a designated location.

(3) All records, other than routine emission test records, required to be maintained under this subpart shall be retained by the manufacturer for a period of 8 years after issuance of all certificates of conformity to which they relate. Routine emission test records shall be retained by the manufacturer for a period of one (1) year after issuance of all certificates of conformity to which they relate. Records may be retained as hard copy or reduced to computer disks, etc., depending on the record retention procedures of the manufacturer: *Provided*, that in every case all the information contained in the hard copy shall be retained.

(4) Nothing in this section limits the Administrator's discretion in requiring the manufacturer to retain additional records or submit information not specifically required by this section.

(5) Pursuant to a request made by the Administrator, the manufacturer shall submit to him/her the information that is required to be retained.

(6) EPA may void a certificate of conformity *ab initio* for an engine family for which the manufacturer fails to retain the records required in this section or to provide such information to the Administrator upon request.

(b) The manufacturer of engines subject to any of the standards prescribed in this part shall submit to the Administrator, at the time of issuance by the manufacturer, copies of all instructions or explanations regarding the use, repair, adjustment, maintenance, or testing of such engine, relevant to the control of crankcase, or exhaust emissions issued by the manufacturer, for use by other manufacturers, assembly plants, distributors, dealers, owners and operators. Any material not translated into the English language need not be submitted unless specifically requested by the Administrator.

(c) Any manufacturer participating in averaging, banking and trading program of subpart D of this part must comply with the maintenance of records requirements of § 94.308.

(d)(1) Any manufacturer who has applied for certification of a new engine subject to certification testing under this subpart shall admit or cause to be admitted any EPA Enforcement Officer during operating hours on presentation of credentials to any of the following:

(i) Any facility where any such tests or any procedures or activities connected with such test are or were performed;

(ii) Any facility where any engine which is being tested (or was tested, or is to be tested) is present;

(iii) Any facility where any construction process or assembly process used in the modification or buildup of such an engine into a certification engine is taking place or has taken place; or

(iv) Any facility where any record or other document relating to any of the activities listed in this paragraph (d)(1).

(2) Upon admission to any facility referred to in paragraph (d)(1) of this section, any EPA Enforcement Officer shall be allowed:

(i) To inspect and monitor any part or aspect of such procedures, activities and testing facilities including, but not limited to, monitoring engine preconditioning, emissions tests, service accumulation, maintenance, and engine storage procedures, and to verify correlation or calibration of test equipment;

(ii) To inspect and make copies of any such records, designs, or other documents, including those records specified in Subpart D of this part; and

(iii) To inspect and/or photograph any part or aspect of any such certification engine and any components to be used in the construction thereof.

(3) In order to allow the Administrator to determine whether or not production engines, conform to the conditions upon which a certificate of conformity has been issued, or conform in all material respects to the design specifications applicable to those engines, as described in the application for certification for which a certificate of conformity has been issued, any manufacturer shall admit any EPA Enforcement Officer on presentation of credentials to:

(i) Any facility where any document, design or procedure relating to the translation of the design and construction of engines and emission related

components described in the application for certification or used for certification testing into production engines is located or carried on;

(ii) Any facility where any engines to be introduced into commerce are manufactured; and

(iii) Any facility where records specified this section are located.

(4) On admission to any such facility referred to in paragraph (d)(3) of this section, any EPA Enforcement Officer shall be allowed:

(i) To inspect and monitor any aspects of such manufacture and other procedures;

(ii) To inspect and make copies of any such records, documents or designs;

(iii) To inspect and photograph any part or aspect of any such engine(s) and any component used in the assembly thereof that are reasonably related to the purpose of his/her entry; and

(iv) To inspect and make copies of any records and documents specified in this section.

(5) Any EPA Enforcement Officer shall be furnished by those in charge of a facility being inspected with such reasonable assistance as he/she may request to help him/her discharge any function listed in this part. Each applicant for or recipient of certification is required to cause those in charge of a facility operated for its benefit to furnish such reasonable assistance without charge to EPA whether or not the applicant controls the facility.

(6) The duty to admit or cause to be admitted any EPA Enforcement Officer applies to any facility involved in the manufacturing or assembling of engines, whether or not the manufacturer owns or controls the facility in question and applies both to domestic and to foreign manufacturers and facilities. EPA will not attempt to make any inspections which it has been informed that local law forbids. However, if local law makes it impossible to do what is necessary to insure the accuracy of data generated at a facility, no informed judgment that an engine is certifiable or is covered by a certificate can properly be based on those data. It is the responsibility of the manufacturer to locate its testing and manufacturing facilities in jurisdictions where this situation will not arise.

(7) For purposes of this section:

(i) ''Presentation of credentials'' shall mean display of the document designating a person as an EPA Enforcement Officer.

(ii) Where component or engine storage areas or facilities are concerned, ''operating hours'' shall mean all times during which personnel other than custodial personnel are at work in the vicinity of the area or facility and have access to it.

(iii) Where facilities or areas other than those covered by paragraph (d)(7)(ii) of this section are concerned, ''operating hours'' shall mean all times during which an assembly line is in operation or all times during which testing, maintenance, service accumulation, production or compilation of records, or any other procedure or activity related to certification testing, to translation of designs from the test stage to the production stage, or to engine manufacture, or assembly is being carried out in a facility.

(iv) ''Reasonable assistance'' includes, but is not limited to, clerical, copying, interpretation and translation services, the making available on request of personnel of the facility being inspected during their working hours to inform the EPA Enforcement Officer of how the facility operates and to answer his questions, and the performance on request of emissions tests on any engine which is being, has been, or will be used for certification testing. Such tests shall be nondestructive, but may require appropriate service accumulation. A manufacturer may be compelled to cause the personal appearance of any employee at such a facility before an EPA Enforcement Officer by written request for his appearance, signed by the Assistant Administrator for Air and Radiation or the Assistant Administrator for Enforcement and Compliance Assurance, served on the manufacturer. Any such employee who has been instructed by the manufacturer to appear will be entitled to be accompanied, represented and advised by counsel.

(v) Any entry without 24 hour prior written or oral notification to the affected manufacturer shall be authorized in writing by the Assistant Administrator for Air and Radiation or the Assistant Administrator for Enforcement and Compliance Assurance.

(8) EPA may void a certificate of conformity *ab initio* for engines introduced into commerce if the manufacturer (or contractor for the manufacturer, if applicable) fails to comply with any provision of this section.

§ 94.216 Hearing procedures.

(a)(1) After granting a request for a hearing under § 94.210 or § 94.208, the Administrator shall designate a Presiding Officer for the hearing.

(2) The hearing shall be held as soon as practicable at a time and place fixed by the Administrator or by the Presiding Officer.

(3) In the case of any hearing requested pursuant to § 94.208, the Administrator may in his/her discretion direct that all argument and presentation of evidence be concluded within such fixed period not less than 30 days as he/she may establish from the date that the first written offer of a hearing is made to the manufacturer. To expedite proceedings, the Administrator may direct that the decision of the Presiding Officer (who may, but need not be the Administrator) shall be the final EPA decision.

(b)(1) Upon his/her appointment pursuant to paragraph (a) of this section, the Presiding Officer will establish a hearing file. The file shall consist of the notice issued by the Administrator under § 94.210 or § 94.208 together with any accompanying material, the request for a hearing and the supporting data submitted therewith, and all documents relating to the request for certification and all documents submitted therewith, and correspondence and other data material to the hearing.

(2) The hearing file will be available for inspection by the applicant at the office of the Presiding Officer.

(c) An applicant may appear in person, or may be represented by counsel or by any other duly authorized representative.

(d)(1) The Presiding Officer, upon the request of any party, or in his/her discretion, may arrange for a prehearing conference at a time and place specified by him/her to consider the following:

(i) Simplification of the issues;

(ii) Stipulations, admissions of fact, and the introduction of documents;

(iii) Limitation of the number of expert witnesses;

(iv) Possibility of agreement disposing of all or any of the issues in dispute;

(v) Such other matters as may aid in the disposition of the hearing, including such additional tests as may be agreed upon by the parties.

(2) The results of the conference shall be reduced to writing by the Presiding Officer and made part of the record.

(e)(1) Hearings shall be conducted by the Presiding Officer in an informal but orderly and expeditious manner. The parties may offer oral or written evidence, subject to the exclusion by the Presiding Officer of irrelevant, immaterial and repetitious evidence.

(2) Witnesses will not be required to testify under oath. However, the Presiding Officer shall call to the attention of witnesses that their statements may be subject to the provisions of 18 U.S.C. 1001 which imposes penalties for knowingly making false statements or representations, or using false documents in any matter within the jurisdiction of any department or agency of the United States.

(3) Any witness may be examined or cross-examined by the Presiding Officer, the parties, or their representatives.

(4) Hearings shall be reported verbatim. Copies of transcripts of proceedings may be purchased by the applicant from the reporter.

(5) All written statements, charts, tabulations, and similar data offered in evidence at the hearings shall, upon a showing satisfactory to the Presiding Officer of their authenticity, relevancy, and materiality, be received in evidence and shall constitute a part of the record.

(6) Oral argument may be permitted in the discretion of the Presiding Officer and shall be reported as part of the record unless otherwise ordered by him/her.

(f)(1) The Presiding Officer shall make an initial decision which shall include written findings and conclusions and the reasons or basis therefor on all the material issues of fact, law, or discretion presented on the record. The findings, conclusions, and written decision shall be provided to the parties and made a part of the record. The initial decision shall become the decision of the Administrator without further proceedings unless there is an appeal to the Administrator or motion for review by the Administrator within 30 days of the date the initial decision was filed.

(2) On appeal from or review of the initial decision, the Administrator shall have all the powers which he/she would have in making the initial decision including the discretion to require or allow briefs, oral argument, the taking of additional evidence or the remanding to the Presiding Officer for additional proceedings. The decision by the Administrator shall include written findings and conclusions and the reasons or basis therefor on all the material issues of fact, law, or discretion presented on the appeal or considered in the review.

§ 94.217 Emission data engine selection.

(a) The manufacturer must select for testing, from each engine family, the engine configuration which is expected to be worst-case for exhaust emission compliance on in-use engines, considering all exhaust emission constituents and the range of installation options available to vessel builders. The engines selected for testing are collectively described as the test fleet.

(b) Each engine in the test fleet must be constructed to be representative of production engines.

(c) After review of the manufacturer's test fleet, the Administrator may select from the available fleet one additional test engine from each engine family.

(d) Each engine selected shall be tested according to the provisions of Subpart B of this part.

(e) In lieu of testing an emission data engine selected under paragraph (a) of this section and submitting the resulting data, a manufacturer may, with Administrator approval, use emission data on a similar engine for which certification has previously been obtained or for which all applicable data required under this subpart have previously been submitted. These data must be submitted in the application for certification.

(f) A single cylinder test engine may be used for certification of Tier 1 Category 3 engine families. If you use test data from a single cylinder test engine for certification, explain in your application how you have determined that such data show that the multiple cylinder production engines will comply with the applicable emission standards.

[64 FR 73331, Dec. 29, 1999, as amended at 68 FR 9786, Feb. 28, 2003]

§ 94.218 Deterioration factor determination.

Manufacturers shall determine exhaust emission deterioration factors using good engineering judgement according to the provisions of this section. Every deterioration factor must be, in the Administrator's judgment, consistent with emissions increases observed in-use based on emission testing of similar engines. Deterioration factors that predict emission increases over the useful life of an engine that are significantly less than the emission increases over the useful life observed from in-use testing of similar engines shall not be used.

(a) A separate exhaust emission deterioration factor shall be established for each engine family and for each emission constituent applicable to that family.

(b) *Calculation procedures*—(1) *For engines not utilizing aftertreatment technology (e.g., catalyst).* For each applicable emission constituent, an additive deterioration factor shall be used; that is, a deterioration factor that when added to the low mileage emission rate equals the emission rate at the end of useful life. However, if the deterioration factor supplied by the manufacturer is less than zero, it shall be zero for the purposes of this section.

(2) *For engines utilizing aftertreatment technology (e.g., catalyst).* For each applicable emission constituent, a multiplicative deterioration factor shall be used; that is deterioration factors that

when multiplied by the low mileage emission rate equal the emission rate at the end of useful life. However, if the deterioration factor supplied by the manufacturer is less than one, it shall be one for the purposes of this section.

(c) *Rounding*. (1) In the case of a multiplicative exhaust emission deterioration factor, round the factor to three places to the right of the decimal point.

(2) In the case of an additive exhaust emission deterioration factor, round the factor shall to at least two places to the right of the decimal point.

(d)(1) Except as allowed by paragraph (d)(2) of this section, the manufacturer shall determine the deterioration factors for Category 1 and Category 2 engines based on service accumulation and related testing, according to the manufacturer's procedures, and the provisions of §§ 94.219 and 94.220. The manufacturer shall determine the form and extent of this service accumulation, consistent with good engineering practice, and shall describe this process in the application for certification.

(2) *Alternatives to service accumulation and testing for the determination of a deterioration factor*. A written explanation of the appropriateness of using an alternative must be included in the application for certification.

(i) *Carryover and carryacross of durability emission data*. In lieu of testing an emission data or durability data engine selected under § 94.217 or § 94.219, and submitting the resulting data, a manufacturer may, with Administrator approval, use exhaust emission deterioration data on a similar engine for which certification to the same standard has previously been obtained or for which all applicable data required under this subpart have previously been submitted. These data must be submitted in the application for certification.

(ii) *Use of non-marine deterioration data*. In the case where a manufacturer produces a certified motor vehicle engine, locomotive engine, or other nonroad engine that is similar to the marine engine to be certified, deterioration data from the non-marine engine may be applied to the marine engine. This application of deterioration data from such an engine to a marine engine is subject to Administrator approval, and the determination of whether the engines are similar shall be based on good engineering judgment.

(iii) *Engineering analysis for established technologies*. In the case where an engine family uses technology which is well established, an analysis based on good engineering practices may be used in lieu of testing to determine a deterioration factor for that engine family. Engines using exhaust gas recirculation or aftertreatment are excluded from this provision. The manufacturer shall provide a written statement to the Administrator that all data, analyses, test procedures, evaluations, and other documents, on which the deterioration factor is based, are available to the Administrator upon request.

(iv) *Assigned deterioration factors*. Small-volume manufacturers may use deterioration factors established by EPA.

[64 FR 73331, Dec. 29, 1999, as amended at 67 FR 68346, Nov. 8, 2002; 68 FR 9786, Feb. 28, 2003]

§ 94.219 Durability data engine selection.

(a) For Category 1 and Category 2 engines, the manufacturer shall select for durability testing, from each engine family, the engine configuration which is expected to generate the highest level of exhaust emission deterioration on engines in use, considering all exhaust emission constituents and the range of installation options available to vessel builders. The manufacturer shall use good engineering judgment in making this selection.

(b) Carryover data satisfying the provisions of § 94.220 may also be used in lieu of testing the configuration selected in paragraph (a) of this section.

(c) Durability data engines shall be built from subsystems and components that are representative of actual production engines.

[64 FR 73331, Dec. 29, 1999, as amended at 68 FR 9786, Feb. 28, 2003]

§ 94.220 Service accumulation.

(a) Each test emission data engine in the test fleet may be operated with all emission control systems operating properly for a period, up to 125 hours of

operation, that is sufficient to stabilize emissions.

(b) Durability data engines shall accumulate service in a manner which will represent the emission levels from in-use engines over their full useful life, consistent with good engineering judgement.

(1) Components may be removed from the engine and aged separately.

(2) End of useful life emission levels and deterioration factors may be projected from durability data engines which have completed less than full useful life service accumulation, provided that the amount of service accumulation completed and projection procedures are determined using good engineering judgement.

(c) No maintenance, other than recommended lubrication and filter changes or maintenance otherwise allowed by this part, may be performed during service accumulation without the Administrator's approval.

(d) The manufacturer must maintain, and provide to the Administrator if requested, records stating the rationale for selecting the service accumulation period and records describing the method used to accumulate service hours on the test engine(s).

§ 94.221 Application of good engineering judgment.

(a) The manufacturer shall exercise good engineering judgment in making all decisions called for under this part, including but not limited to selections, categorizations, determinations, and applications of the requirements of the part.

(b) Upon written request by the Administrator, the manufacturer shall provide within 15 working days (or such longer period as may be allowed by the Administrator) a written description of the engineering judgment in question.

(c) The Administrator may reject any such decision by a manufacturer if it is not based on good engineering judgment or is otherwise inconsistent with the requirements of this part.

(d) If the Administrator rejects a decision by a manufacturer with respect to the exercise of good engineering judgment, the following provisions shall apply:

(1) If the Administrator determines that incorrect information was deliberately used in the decision process, that important information was deliberately overlooked, that the decision was not made in good faith, or that the decision was not made with a rational basis, the Administrator may suspend or void *ab initio* a certificate of conformity.

(2) If the Administrator determines that the manufacturer's decision is not covered by the provisions of paragraph (d) (1) of this section, but that a different decision would reflect a better exercise of good engineering judgment, then the Administrator will notify the manufacturer of this concern and the basis of the concern.

(i) The manufacturer shall have at least 30 days to respond to this notice. The Administrator may extend this response period upon request from the manufacturer if it is necessary to generate additional data for the manufacturer's response.

(ii) The Administrator shall make the final ruling after considering the information provided by the manufacturer during the response period. If the Administrator determines that the manufacturer's decision was not made using good engineering judgment, he/she may reject that decision and apply the new ruling to future corresponding decisions as soon as practicable.

(e) The Administrator shall notify the manufacturer in writing regarding any decision reached under paragraph (d)(1) or (2) of this section. The Administrator shall include in this notification the basis for reaching the determination.

(f) Within 30 working days following receipt of notification of the Administrator's determinations made under paragraph (d) of this section, the manufacturer may request a hearing on those determinations. The request shall be in writing, signed by an authorized representative of the manufacturer, and shall include a statement specifying the manufacturer's objections to the Administrator's determinations, and data or other analysis in support of such objections. If, after review of the request and supporting data or analysis, the Administrator

finds that the request raises a substantial factual issue, he/she shall provide the manufacturer a hearing in accordance with § 94.216 with respect to such issue.

§ 94.222 Certification of engines on imported vessels.

For marine engines subject to the requirements of this part that are installed on imported vessels, the Administrator may specify alternate certification provisions as necessary.

Subpart D—Certification Averaging, Banking, and Trading Provisions

§ 94.301 Applicability.

Marine engine families subject to the standards of subpart A of this part are eligible to participate in the certification averaging, banking, and trading program described in this subpart. The provisions of this subpart apply to manufacturers of new engines that are subject to the emission standards of § 94.8. To the extent specified in 40 CFR part 60, subpart IIII, stationary engines certified under this part and subject to the standards of 40 CFR part 60, subpart IIII, may participate in the averaging, banking, and trading program described in this subpart.

[71 FR 39184, July 11, 2006]

§ 94.302 Definitions.

The definitions of Subpart A of this part apply to this subpart. The following definitions also apply:

Applicable standard means a standard that would have otherwise been applicable had the engine not been certified under this subpart to an FEL different than that standard.

Broker means any entity that facilitates a trade between a buyer and seller.

Buyer means the entity that receives credits as a result of trade.

Reserved credits means credits that have been generated but have not yet been reviewed by EPA or used to demonstrate compliance under the averaging provisions of this subpart.

Seller means the entity that provides credits during a trade.

§ 94.303 General provisions.

(a) Participation in the averaging, banking, and trading program is voluntary. A manufacturer may choose to involve some or all of its engine families in any or all aspects of the program.

(b) An engine family is eligible to participate in the certification averaging, banking, and trading program for THC+NO_X and PM emissions only if it is subject to regulation under this part with certain exceptions specified in paragraph (c) of this section. No averaging, banking, and trading program is available for meeting the CO standards of this part.

(c) Engines may not participate in the certification averaging, banking, and trading program if they are exported. Only engines certified under this part are eligible for generation or use of credits in this certification averaging, banking, and trading program. Engines certified to the Blue Sky provisions of § 94.8(f) are not eligible for inclusion in this certification averaging, banking, and trading program.

(d) Averaging involves the generation of credits by a manufacturer for use by that same manufacturer in the same calendar year. A manufacturer may use averaging during certification to offset an emission exceedance of an engine family caused by an FEL above the applicable emission standard, subject to the provisions of this subpart.

(e) Banking involves the generation of credits by a manufacturer in a given calendar year for use in a subsequent model year. A manufacturer may bank actual credits only after the end of the calendar year and after EPA has reviewed the manufacturer's end-of-year reports. During the calendar year and before submittal of the end-of-year report, credits originally designated in the certification process for banking will be considered reserved and may be redesignated for trading or averaging in the end-of-year report. Credits declared for banking from the previous calendar year that have not been reviewed by EPA may be used in averaging or trading transactions. However, such credits may be revoked at a later time following EPA review of the end-of-year report or any subsequent audit actions.

(f) Trading involves the sale of banked credits for use in certification of new engines under this part. Only banked credits may be traded; reserved credits may not be traded.

§ 94.304 Compliance requirements.

(a) Manufacturers wishing to participate in certification averaging, banking and trading programs shall select a FEL for each engine family they wish to include. The level of the FEL shall be selected by the manufacturer, subject to the upper limits described in paragraph (m) of this section. An engine family certified to an FEL is subject to all provisions specified in this part, except that the applicable FEL replaces the applicable $THC+NO_X$ and PM emission standard for the family participating in the averaging, banking, and trading program.

(b) A manufacturer may certify one or more engine families at FELs above or below the applicable emission standard, provided the summation of the manufacturer's projected balance of all credit transactions in a given calendar year is greater than or equal to zero, as calculated for each family under § 94.305 and reported under § 94.309.

(c) Manufacturers certifying engine families with FELs exceeding the applicable emission standard shall obtain emission credits in amounts sufficient to address the shortfall. Credits may be obtained from averaging, banking, or trading, subject to the restrictions described in this subpart.

(d) Manufacturers certifying engine families with FELs below the applicable emission standard may generate emission credits to average, bank, or trade, or a combination thereof.

(e) An engine family may not generate credits for one pollutant while also using credits for another pollutant in the same model year.

(f) Credits may only be used for certification; they may not be used to remedy a violation of the FEL determined by production line or in-use testing. Credits may be used to allow subsequent production of engines for an engine family failing production line testing if the manufacturer elects to recertify to a higher FEL.

(g) [Reserved].

(h) If an FEL is changed after initial certification in any given model year, the manufacturer must conduct production line testing to verify that the emission levels are achieved, with one exception: when an FEL is changed immediately after (and because of) a production line testing failure, additional verification testing is not required.

(i) Manufacturers participating in the averaging, banking and trading program must demonstrate compliance with the applicable emission standards at the end of the model year. Manufacturers that have certified engine families to FELs above the applicable emission standards and do not have sufficient emission credits to offset the difference between the emission standard and the FEL for such engine families will be in violation of the conditions of the certificate of conformity for such engine families. The certificates of conformity may be voided *ab initio* for those engine families.

(j) In the event of a negative credit balance resulting from a credit trade, both the buyer(s) and the seller(s) are liable, except in cases involving fraud. Certificates of all engine families participating in a negative trade may be voided *ab initio*.

(1) Where a buyer of credits is not responsible for causing the negative credit balance, the buyer is only liable to supply additional credits equivalent to any amount of invalid credits that the buyer used for its engine family(ies).

(2) Credit holders responsible for the credit shortfall may be subject to the requirements of § 94.309(g)(3).

(k) The following provisions limit credit exchanges between different types of engines:

(1) Credits generated by Category 1 engine families may be used for compliance by Category 1 or Category 2 engine families. Credits generated from Category 1 engine families for use by Category 2 engine families must be discounted by 25 percent.

(2) Credits generated by Category 2 engine families may be used for compliance only by Category 2 engine families.

(3) Credits may not be exchanged between recreational and commercial engines.

(l) Credit life shall be unlimited.

(m) *Upper limits.* The FELs for THC+NO_X and PM for new engines certified for participation in this averaging, banking and trading program may not exceed the following values:

(1) For Category 1 engines, the FEL may not exceed the levels contained in Table D–1, which follows:

TABLE D–1—CATEGORY 1 UPPER LIMITS FOR TIER 2 FAMILY EMISSION LIMITS

Subcategory liters/cylinder	Model year [1]	THC+NO_X FEL g/kW-hr	PM FEL g/kW-hr
Power ≥ 37 kW disp. < 0.9	2005	11.5	1.2
0.9 ≤ disp. < 1.2	2004	11.5	1.2
1.2 ≤ disp. < 2.5	2004	10.5	0.54
2.5 ≤ disp. < 5.0	2007	10.5	0.54

[1] The model years listed indicate the model years for which the specified standards start.

(2) For Category 2 engines, the FEL may not exceed the applicable standard by more than 25 percent.

[64 FR 73331, Dec. 29, 1999, as amended at 67 FR 68346, Nov. 8, 2002]

§ 94.305 Credit generation and use calculation.

(a) For each participating engine family, calculate THC+NO_X and PM emission credits (positive or negative) according to the equation in paragraph (b) of this section and round emissions to the nearest one-hundredth of a megagram (Mg). Use consistent units throughout the calculation.

(b) Credits (Mg) for each engine family are calculated as: Emission credits = (Std—FEL)×(UL)×(Production)×(AvgPR)×(LF)×(10^{-6})

Where:

(i) Std = the applicable cycle-weighted marine engine THC+NO_X or PM emission standard in grams per kilowatt-hour.

(ii) FEL = the family emission limit for the engine family in grams per kilowatt-hour. (The FEL may not exceed the limit established in § 94.304(m) for each pollutant.)

(iii) UL = the useful life in hours of operation.

(iv) Production = the number of engines participating in the averaging, banking, and trading program within the given engine family during the calendar year (or the number of engines in the subset of the engine family for which credits are being calculated). Quarterly production projections are used for initial certification. Actual applicable production/sales volumes are used for end-of-year compliance determination.

(v) AvgPR = average power rating of all of the configurations within an engine family, calculated on a sales-weighted basis, in kilowatts.

(vi) LF = the load factor, dependent on whether the engine is intended for propulsion or auxiliary applications, as follows:

(A) 0.69 for propulsion engines,

(B) 0.51 for auxiliary engines.

[64 FR 73331, Dec. 29, 1999, as amended at 68 FR 9786, Feb. 28, 2003]

§ 94.306 Certification.

(a) In the application for certification a manufacturer must:

(1) Declare its intent to include specific engine families in the averaging, banking, and/or trading programs. Separate declarations are required for each pollutant (THC+NO_X and PM).

(2) Declare FELs for each engine family participating in certification averaging, banking, and/or trading.

(i) The FELs must be to the same number of significant digits as the emission standard.

(ii) In no case may the FEL exceed the upper limit prescribed in § 94.304(m).

(3) Conduct and submit detailed calculations of projected emission credits (positive or negative) based on quarterly production projections for each participating family and for each pollutant, using the applicable equation in § 94.305 and the applicable values of the terms in the equation for the specific family.

(i) If the engine family is projected to have negative emission credits, state specifically the source (manufacturer/engine family) of the credits necessary to offset the credit deficit according to quarterly projected production.

(ii) If the engine family is projected to generate credits, state specifically where the quarterly projected credits will be applied (manufacturer/engine family or reserved).

(4) Submit a statement that the engines for which certification is requested will not, to the best of the manufacturer's belief, cause the manufacturer to have a negative credit balance when all credits are calculated for all the manufacturer's engine families participating in the averaging, banking, and trading program.

(b) Based on this information, each manufacturer's certification application must demonstrate:

(1) That at the end of model year production, each engine family has a net emissions credit balance equal to or greater than zero for any pollutant and program for which participation in certification under averaging, banking, and/or trading is being sought. The equation in section § 94.305 shall be used in this calculation for each engine family.

(2) That the manufacturer will obtain sufficient credits to be used to comply with the emission standard for any engine family with an FEL that exceeds the applicable emission standard, or where credits will be applied if the FEL is less than the emission standard. In cases where credits are being obtained, for each engine family involved the manufacturer must identify specifically the source of the credits being used (manufacturer/engine family). All such reports shall include all credits involved in certification averaging, banking, or trading.

(3) That in cases where credits are being generated/supplied, the use of such credits is specifically designated (manufacturer/engine family or reserved). All such reports shall include all credits involved in certification averaging, banking, or trading.

(c) Manufacturers must monitor projected versus actual production throughout the model year to ensure that compliance with emission standards is achieved at the end of the model year.

(d) At the end of the model year, the manufacturer must provide the end-of-year reports required under § 94.309.

(1) Projected credits based on the information supplied in the certification application may be used to obtain a certificate of conformity. However, any such projected credits must be validated based on review of the end of model year reports and may be revoked at a later time based on follow-up audits or any other verification measure deemed appropriate by the Administrator.

(2) Compliance for engine families using averaging, banking, or trading will be determined at the end of the model year. Manufacturers that have certified engine families with credit balances for THC+NO_X and/or PM that do not equal or exceed zero shall be in violation of the conditions of the certificate of conformity for such engine families. The certificate of conformity may be voided *ab initio* for those engine families.

(e) Other conditions of certification.

(1) All certificates issued are conditional upon compliance by the manufacturer with the provisions of this subpart both during and after the calendar year of production.

(2) Failure to comply with all provisions of this subpart will be considered to be a failure to satisfy the conditions upon which the certificate was issued, and the certificate may be deemed void *ab initio*.

(3) The manufacturer bears the burden of establishing to the satisfaction of the Administrator that the conditions upon which the certificate was issued were satisfied or waived.

§ 94.307 Labeling.

For all engines included in the certification averaging, banking, and trading program, the FEL to which the engine is certified must be included on the label required in § 94.212.

§ 94.308 Maintenance of records.

(a) The manufacturer of any engine that is certified under the averaging,

banking, and trading program must establish, maintain, and retain the following adequately organized and indexed records for each such engine produced:

(1) EPA engine family and configuration;

(2) Engine identification number;

(3) Engine calendar year and build date;

(4) Rated power;

(5) Purchaser and destination; and

(6) Assembly plant.

(b) The manufacturer of any engine family that is certified under the averaging, banking, and trading program must establish, maintain, and retain the following adequately organized and indexed records for each such family:

(1) Model year and EPA engine family;

(2) Family Emission Limit(s) (FEL);

(3) Rated power for each configuration;

(4) Projected applicable production/sales volume for the calendar year;

(5) Actual applicable production/sales volume for the calendar year; and

(6) Useful life.

(c) Any manufacturer producing an engine family participating in trading of credits must maintain the following records on a quarterly basis for each engine family in the trading program:

(1) The model year and engine family;

(2) The actual quarterly and cumulative applicable production/sales volume;

(3) The values required to calculate credits as given in § 94.305;

(4) The resulting type and number of credits generated/required;

(5) How and where credit surpluses are dispersed; and

(6) How and through what means credit deficits are met.

(d) The manufacturer must retain all records required to be maintained under this section for a period of 8 years from the due date for the end-of-calendar year report. Records may be retained as hard copy or reduced to microfilm, ADP diskettes, and so forth, depending on the manufacturer's record retention procedure; provided, that in every case all information contained in the hard copy is retained.

(e) Nothing in this section limits the Administrator's discretion in requiring the manufacturer to retain additional records or submit information not specifically required by this section.

(f) Pursuant to a request made by the Administrator, the manufacturer must submit to the Administrator the information that the manufacturer is required to retain.

(g) EPA may void *ab initio* a certificate of conformity for an engine family for which the manufacturer fails to retain the records required in this section or to provide such information to the Administrator upon request.

§ 94.309 Reports.

(a) Manufacturers must submit the certification information as required under § 94.306, and end-of-year reports each year as part of their participation in certification averaging, banking, and trading programs.

(b) Quarterly reports. All entities involved in credit trades must submit quarterly reports. The reports shall include the source or recipient of the credits, the amount of credits involved plus remaining balances, details regarding the pollutant, and model year as well as the information prescribed in § 94.308(c). Copies of contracts related to credit trading must be included or supplied by the buyer, seller, and broker, as applicable.

(c) End-of-year reports must include the information prescribed in § 94.308(b). The report shall include a calculation of credit balances for each family to show that the summation of the manufacturer's use of credits results in a credit balance equal to or greater than zero. The report shall be consistent in detail with the information submitted under § 94.306 and show how credit surpluses were dispersed and how credit shortfalls were met on a family specific basis. The end-of-year report shall incorporate any information reflected in previous quarterly reports.

(d) The applicable production/sales volume for quarterly and end-of-year reports must be based on the location of either the point of first retail sale by the manufacturer or the point at which the engine is placed into service, whichever occurs first. This is called the final product purchase location.

(e) Each quarterly and end-of-year report submitted shall include a statement certifying to the accuracy and authenticity of the material reported therein.

(f) Requirements for submission. (1) Quarterly reports must be submitted within 90 days of the end of the calendar quarter to the Designated Officer.

(2) End-of-year reports must be submitted within 120 days of the end of the calendar year to the Designated Officer.

(3) Failure by a manufacturer participating in the averaging, banking, or trading program to submit any quarterly or end-of-year reports in the specified time for all engines is a violation of sections 203(a)(1) and 213 of the Clean Air Act for each engine.

(4) A manufacturer generating credits for banking only who fails to submit end-of-year reports in the applicable specified time period (120 days after the end of the calendar year) may not use or trade the credits until such reports are received and reviewed by EPA. Use of projected credits pending EPA review is not permitted in these circumstances.

(g) Reporting errors. (1) Errors discovered by EPA or the manufacturer in the end-of-year report, including errors in credit calculation, may be corrected 180-days subsequent to submission of the end-of-year report. Errors discovered by EPA after 180-days shall be correctable if, as a result of the correction, the manufacturer's credits are reduced. Errors in the manufacturer's favor are not corrected if discovered after the 180-day correction period allowed.

(2) If EPA or the manufacturer determines that a reporting error occurred on an end-of-year report previously submitted to EPA under this section, the manufacturer's credits and credit calculations will be recalculated. Erroneous positive credits will be void. Erroneous negative credit balances may be corrected by EPA.

(3) If EPA review of a manufacturer's end-of-year report indicates a credit shortfall, the manufacturer will be permitted to purchase the necessary credits to bring the credit balance to zero. These credits must be supplied at the ratio of 1.1 credits for each 1.0 credit needed. If sufficient credits are not available to bring the credit balance to zero for the family(ies) involved, EPA may void the certificate(s) for that family(ies) *ab initio*. In addition, all engines within an engine family for which there are insufficient credits will be considered to have violated the conditions of the certificate of conformity and therefore are not covered by that certificate.

(4) If within 180 days of receipt of the manufacturer's end-of-year report, EPA review determines a reporting error in the manufacturer's favor (that is, resulting in an increased credit balance) or if the manufacturer discovers such an error within 180 days of EPA receipt of the end-of-year report, the credits are restored for use by the manufacturer.

§ 94.310 Notice of opportunity for hearing.

Any voiding of the certificate under this subpart will be made only after the manufacturer concerned has been offered an opportunity for a hearing conducted in accordance with § 94.216 and, if a manufacturer requests such a hearing, will be made only after an initial decision by the Presiding Officer.

Subpart E—Emission-related Defect Reporting Requirements, Voluntary Emission Recall Program

§ 94.401 Applicability.

The requirements of this subpart are applicable to manufacturers of engines subject to the provisions of Subpart A of this part. The requirement to report emission-related defects affecting a given class or category of engines applies for eight years from the end of the year in which such engines were manufactured.

§ 94.402 Definitions.

The definitions of Subpart A of this part apply to this subpart.

§ 94.403 Emission defect information report.

(a) A manufacturer must file a defect information report whenever it determines, in accordance with procedures it established to identify either safety-related or performance defects (or based on other information), that a specific emission-related defect exists in 25 or more Category 1 marine engines, or 10 or more Category 2 marine engines, or 2 or more Category 3 engines or cylinders. No report must be filed under this paragraph for any emission-related defect corrected prior to the sale of the affected engines to an ultimate purchaser. (Note: These limits apply to the occurrence of the same defect, and are not constrained by engine family or model year.)

(b) Defect information reports required under paragraph (a) of this section must be submitted not more than 15 working days after the same emission-related defect is found to effect 25 or more Category 1 marine engines, or 10 or more Category 2 marine engines. Information required by paragraph (c) of this section that is either not available within 15 working days or is significantly revised must be submitted as it becomes available.

(c) Except as provided in paragraph (b) of this section, each defect report must contain the following information in substantially the format outlined:

(1) The manufacturer's corporate name.

(2) A description of the defect.

(3) A description of each class or category of engines potentially affected by the defect including make, model, calendar year produced, purchaser and any other information as may be required to identify the engines affected.

(4) For each class or category of engines described in response to paragraph (c)(3) of this section, the following shall also be provided:

(i) The number of engines known or estimated to have the defect and an explanation of the means by which this number was determined.

(ii) The address of the plant(s) at which the potentially defective engines were produced.

(5) An evaluation of the emissions impact of the defect and a description of any operational or performance problems which a defective engine might exhibit.

(6) Available emissions data which relate to the defect.

(7) An indication of any anticipated follow-up by the manufacturer.

[64 FR 73331, Dec. 29, 1999, as amended at 68 FR 9786, Feb. 28, 2003]

§ 94.404 Voluntary emissions recall reporting.

(a) When any manufacturer initiates a voluntary emissions recall campaign involving an engine, the manufacturer shall submit to EPA a report describing the manufacturer's voluntary emissions recall plan as prescribed by this section within 15 working days of the date owner notification was begun. The report shall contain the following:

(1) A description of each class or category of engines recalled including the number of engines to be recalled, the calendar year if applicable, the make, the model, and such other information as may be required to identify the engines recalled.

(2) A description of the specific modifications, alterations, repairs, corrections, adjustments, or other changes to be made to correct the engines affected by the emission-related defect.

(3) A description of the method by which the manufacturer will notify engine owners.

(4) A description of the proper maintenance or use, if any, upon which the manufacturer conditions eligibility for repair under the remedial plan, an explanation of the manufacturer's reasons for imposing any such condition, and a description of the proof to be required of an engine owner to demonstrate compliance with any such condition.

(5) A description of the procedure to be followed by engine owners to obtain correction of the nonconformity. This shall include designation of the date on or after which the owner can have the nonconformity remedied, the time reasonably necessary to perform the labor to remedy the defect, and the designation of facilities at which the defect can be remedied.

(6) If some or all the nonconforming engines are to be remedied by persons other than authorized warranty agents

of the manufacturer, a description of the class of persons other than authorized warranty agents of the manufacturer who will remedy the defect.

(7) A copy of any written notification sent to engine owners.

(8) A description of the system by which the manufacturer will assure that an adequate supply of parts will be available to perform the repair under the remedial plan including the date by which an adequate supply of parts will be available to initiate the repair campaign, the percentage of the total parts requirement of each person who is to perform the repair under the remedial plan to be shipped to initiate the campaign, and the method to be used to assure the supply remains both adequate and responsive to owner demand.

(9) Three copies of all necessary instructions to be sent to those persons who are to perform the repair under the remedial plan.

(10) A description of the impact of the changes on fuel consumption, operation or performance, and safety of each class or category of engines to be recalled.

(11) A sample of any label to be applied to engines which participate in the voluntary recall campaign.

(b) Unless otherwise specified by the Administrator, the manufacturer shall report on the progress of the recall campaign by submitting subsequent reports for six consecutive quarters, or until proven that remedial action has been adequately taken on all affected engines, whichever occurs first, commencing with the quarter after the voluntary emissions recall campaign actually begins. Such reports shall be submitted no later than 25 working days after the close of each calendar quarter. For each class or group of engine subject to the voluntary emissions recall campaign, the quarterly report shall contain the:

(1) Emission recall campaign number, if any, designated by the manufacturer.

(2) Date owner notification was begun, and date completed.

(3) Number of engines involved in the voluntary emissions recall campaign.

(4) Number of engines known or estimated to be affected by the emission-related defect and an explanation of the means by which this number was determined.

(5) Number of engines inspected pursuant to voluntary emission recall plan.

(6) Number of inspected engines found to be affected by the emissions-related defect.

(7) Number of engines actually receiving repair under the remedial plan.

(8) Number of engines determined to be unavailable for inspection or repair under the remedial plan due to exportation, scrappage, or for other reasons (specify).

(9) Number of engines determined to be ineligible for remedial action due to a failure to properly maintain or use such engines.

(10) Three copies of any service bulletins which relate to the defect to be corrected and which have not previously been reported.

(11) Three copies of all communications transmitted to engine owners which relate to the defect to be corrected and which have not previously been submitted.

(c) If the manufacturer determines that any of the information requested in paragraph (b) of this section has changed or was incorrect, revised information and an explanatory note shall be submitted. Answers to paragraphs (b)(5), (6), (7), (8), and (9) of this section shall be cumulative totals.

(d) The manufacturer shall maintain in a form suitable for inspection, such as computer information storage devices or card files, the names and addresses of engine owners:

(1) To whom notification was given;

(2) Who received remedial repair or inspection under the remedial plan; and

(3) Who were determined not to qualify for such remedial action when eligibility is conditioned on proper maintenance or use.

(e) The records described in paragraph (d) of this section shall be made available to the Administrator upon request.

§ 94.405 Alternative report formats.

(a) Any manufacturer may submit a plan for making either of the reports required by §§ 94.403 and 94.404 on computer diskettes, magnetic tape or other

machine readable format. The plan shall be accompanied by sufficient technical detail to allow a determination that data requirements of these sections will be met and that the data in such format will be usable by EPA.

(b) Upon approval by the Administrator of the reporting system, the manufacturer may use such system until otherwise notified by the Administrator.

§ 94.406 Reports filing: record retention.

(a) The reports required by §§ 94.403 and 94.404 shall be sent to the Designated Officer.

(b) The information gathered by the manufacturer to compile the reports required by §§ 94.403 and 94.404 shall be retained for not less than 8 years from the date of the manufacture of the engines and shall be made available to duly authorized officials of the EPA upon request.

§ 94.407 Responsibility under other legal provisions preserved.

The filing of any report under the provisions of this subpart shall not affect a manufacturer's responsibility to file reports or applications, obtain approval, or give notice under any provision of law.

§ 94.408 Disclaimer of production warranty applicability.

(a) The act of filing an Emission Defect Information Report pursuant to § 94.403 is inconclusive as to the existence of a defect subject to the warranty provided by section 207(a) of the Act.

(b) A manufacturer may include on each page of its Emission Defect Information Report a disclaimer stating that the filing of a Defect Information Report pursuant to this subpart is not conclusive as to the applicability of the Production Warranty provided by section 207(a) of the Act.

Subpart F—Manufacturer Production Line Testing Programs

§ 94.501 Applicability.

(a) The requirements of this subpart are applicable to manufacturers of engines subject to the provisions of subpart A of this part, excluding small-volume manufacturers.

(b) The provisions of subpart F of 40 CFR part 89 (Selective Enforcement Audit) apply to engines subject to the provisions of subpart A of this part.

(c) Manufacturers may comply with the provisions of 40 CFR part 1042, subpart D, instead of the provisions of this subpart F.

[64 FR 73331, Dec. 29, 1999, as amended at 67 FR 68346, Nov. 8, 2002; 73 FR 37197, June 30, 2008]

§ 94.502 Definitions.

The definitions in subpart A of this part apply to this subpart.

§ 94.503 General requirements.

(a) For Tier 2 and later Category 1 and Category 2 engines, manufacturers shall test production line engines in accordance with sampling procedures specified in § 94.505 and the test procedures specified in § 94.506. The production-line testing requirements of this part do not apply for other engines.

(b) Upon request, the Administrator may also allow manufacturers to conduct alternate production line testing programs for Category 1 and Category 2 engines, provided the Administrator determines that the alternate production line testing program provides equivalent assurance that the engines that are being produced conform to the provisions of this part. As part of this allowance or for other reasons, the Administrator may waive some or all of the requirements of this subpart.

(c) The requirements of this subpart apply with respect to all applicable standards and FELs of subpart A of this part, including the supplemental standards of § 94.8(e).

(d) If you certify an engine family with carryover emission data, as described in § 94.206(c), and these equivalent engine families consistently pass the production-line testing requirements over the preceding two-year period, you may ask for a reduced testing rate for further production-line testing for that family. The minimum testing rate is one engine per engine family. If we reduce your testing rate, we may limit our approval to any number of model years. In determining whether

to approve your request, we may consider the number of engines that have failed the emission tests.

[64 FR 73331, Dec. 29, 1999, as amended at 67 FR 68341, Nov. 8, 2002; 68 FR 9787, Feb. 28, 2003]

§ 94.504 Right of entry and access.

(a) To allow the Administrator to determine whether a manufacturer is complying with the provisions of this part, one or more EPA enforcement officers may enter during operating hours and upon presentation of credentials any of the following places:

(1) Any facility, including ports of entry, where any engine is to be introduced into commerce or any emission-related component is manufactured, assembled, or stored;

(2) Any facility where any test conducted pursuant to a manufacturer's production line testing program or any procedure or activity connected with such test is or was performed;

(3) Any facility where any test engine is present; and

(4) Any facility where any record required under § 94.509 or other document relating to this subpart is located.

(b) Upon admission to any facility referred to in paragraph (a) of this section, EPA enforcement officers are authorized to perform the following inspection-related activities:

(1) To inspect and monitor any aspect of engine manufacture, assembly, storage, testing and other procedures, and to inspect and monitor the facilities in which these procedures are conducted;

(2) To inspect and monitor any aspect of engine test procedures or activities, including test engine selection, preparation and service accumulation, emission duty cycles, and maintenance and verification of test equipment calibration;

(3) To inspect and make copies of any records or documents related to the assembly, storage, selection, and testing of an engine; and

(4) To inspect and photograph any part or aspect of any engine and any component used in the assembly thereof that is reasonably related to the purpose of the entry.

(c) EPA enforcement officers are authorized to obtain reasonable assistance without cost from those in charge of a facility to help the officers perform any function listed in this subpart and they are authorized to request the manufacturer to make arrangements with those in charge of a facility operated for the manufacturer benefit to furnish reasonable assistance without cost to EPA.

(1) Reasonable assistance includes, but is not limited to, clerical, copying, interpretation and translation services; the making available on an EPA enforcement officer's request of personnel of the facility being inspected during their working hours to inform the EPA enforcement officer of how the facility operates and to answer the officer's questions; and the performance on request of emission tests on any engine which is being, has been, or will be used for production line testing.

(2) By written request, signed by the Assistant Administrator for Air and Radiation or the Assistant Administrator for Enforcement and Compliance Assurance, and served on the manufacturer, a manufacturer may be compelled to cause the personal appearance of any employee at such a facility before an EPA enforcement officer. Any such employee who has been instructed by the manufacturer to appear will be entitled to be accompanied, represented, and advised by counsel.

(d) EPA enforcement officers are authorized to seek a warrant or court order authorizing the EPA enforcement officers to conduct the activities authorized in this section, as appropriate, to execute the functions specified in this section. EPA enforcement officers may proceed *ex parte* to obtain a warrant or court order whether or not the EPA enforcement officers first attempted to seek permission from the manufacturer or the party in charge of the facility(ies) in question to conduct the activities authorized in this section.

(e) A manufacturer is responsible for locating its foreign testing and manufacturing facilities in jurisdictions where local law does not prohibit an EPA enforcement officer(s) from conducting the activities specified in this section. EPA will not attempt to make any inspections which it has been informed local foreign law prohibits.

§ 94.505 Sample selection for testing.

(a) At the start of each model year, the manufacturer will begin to select engines from each Category 1 and Category 2 engine family for production line testing. Each engine will be selected from the end of the production line. Testing shall be performed throughout the entire model year to the extent possible. Engines selected shall cover the broadest range of production possible.

(1)(i) The required sample size for Category 1 engine manufacturers is one percent of projected annual U.S.-directed production for all Category 1 engine families, provided that no engine tested fails to meet applicable emission standards. Test engines shall include a proportional sample from each engine family. The required sample size is zero if a manufacturer's projected annual production for all Category 1 engine families is less than 100.

(ii) The required sample size for a Category 2 engine family is one percent of projected annual U.S.-directed production for that engine family, with a minimum sample size of one test per model year provided that no engine tested fails to meet applicable emission standards.

(2) Manufacturers may elect to test additional engines. All additional engines must be tested in accordance with the applicable test procedures of this part.

(3) The Administrator may reject any engines selected by the manufacturer if he/she determines that such engines are not representative of actual production.

(b) The manufacturer must assemble the test engines using the same mass production process that will be used for engines to be introduced into commerce.

(c) No quality control, testing, or assembly procedures will be used on any test engine or any portion thereof, including parts and subassemblies, that have not been or will not be used during the production and assembly of all other engines of that family, except with the approval of the Administrator.

[64 FR 73331, Dec. 29, 1999, as amended at 68 FR 9787, Feb. 28, 2003]

§ 94.506 Test procedures.

(a)(1) For engines subject to the provisions of this subpart, the prescribed test procedures are those procedures described in Subpart B of this part, except as provided in this section.

(2) The Administrator may, on the basis of a written application by a manufacturer, prescribe test procedures other than those specified in paragraph (a)(1) of this section for any engine he/she determines is not susceptible to satisfactory testing using procedures specified in paragraph (a)(1) of this section.

(3) If test procedures other than those in Subpart B of this part were used in certification of the engine family being tested under this subpart (other than alternate test procedures necessary for testing of a development engine instead of a low hour engine under § 94.9), the manufacturer shall use the test procedures used in certification for production line testing.

(b)(1) The manufacturer may not adjust, repair, prepare, modify, or perform any emission test on any test engine unless this adjustment, repair, preparation, modification and/or test is documented in the manufacturer's engine assembly and inspection procedures and is actually performed by the manufacturer or unless this adjustment, repair, preparation, modification and/or test is required or permitted under this subpart or is approved in advance by the Administrator.

(2) Any adjustable engine parameter must be set to values or positions that are within the range specified in the approved application for certification.

(3) The Administrator may adjust or require to be adjusted any engine parameter which the Administrator has determined to be subject to adjustment for certification and production line testing, to any setting within the specified adjustable range of that parameter, as determined by the Administrator, prior to the performance of any test.

(c) Service Accumulation/Green Engine Factor. The manufacturer shall accumulate up to 300 hours of service on the engines to be tested. In lieu of conducting such service accumulation, the manufacturer may establish a Green Engine Factor for each regulated

pollutant for each engine family to be used in calculating emissions test results. The manufacturer shall obtain the approval of the Administrator prior to using a Green Engine Factor.

(d) The manufacturer may not perform any maintenance on test engines after selection for testing.

(e) If an engine is shipped to a facility other than the production facility for production line testing, and an adjustment or repair is necessary because of such shipment, the engine manufacturer must perform the necessary adjustment or repair only after the initial test of the engine, except where the Administrator has determined that the test would be impossible to perform or would permanently damage the engine.

(f) If an engine cannot complete the service accumulation or an emission test, because of a malfunction, the manufacturer may request that the Administrator authorize either the repair of that engine or its deletion from the test sequence.

(g) *Retesting*. If an engine manufacturer determines that any production line emission test of an engine is invalid, the engine must be retested in accordance with the requirements of this subpart. Emission results from all tests must be reported to EPA, including test results the manufacturer determines are invalid. The engine manufacturer must also include a detailed explanation of the reasons for invalidating any test in the quarterly report required in § 94.508(e). In the event a retest is performed, a request may be made to the Administrator, within ten days of the end of the production quarter, for permission to substitute the after-repair test results for the original test results. The Administrator will either affirm or deny the request by the engine manufacturer within ten working days from receipt of the request.

§ 94.507 Sequence of testing.

(a) If one or more Category 1 or Category 2 engines fail a production line test, then the manufacturer must test two additional engines for each engine that fails.

(b) The two additional engines tested under paragraph (a) of this section shall be selected from either the next fifteen produced in that engine family, or from those engines produced in that engine family within 48 hours of the completion of the failed test.

[64 FR 73331, Dec. 29, 1999, as amended at 68 FR 9787, Feb. 28, 2003]

§ 94.508 Calculation and reporting of test results.

(a) Manufacturers shall calculate initial test results using the applicable test procedure specified in § 94.506(a). These results must also include the Green Engine Factor, if applicable. Round these results to the number of decimal places contained in the applicable emission standard expressed to one additional significant figure.

(b) To calculate test results, sum the initial test results derived in paragraph (a) of this section for each test engine, divide by the number of tests conducted on the engine, and round to the same number of decimal places contained in the applicable standard expressed to one additional decimal place. (For example, if the applicable standard is 7.8, then round the test results to two places to the right of the decimal.)

(c) To calculate the final test results for each test engine, apply the appropriate deterioration factors, derived in the certification process for the engine family, to the test results described in paragraph (b) of this section; round to the same number of decimal places contained in the applicable standard expressed to one additional decimal place. (For example, if the applicable standard is 7.8, then round the test results to two places to the right of the decimal.)

(d)(1) If, subsequent to an initial failure of a Category 1 or Category 2 production line test, the average of the test results for the failed engine and the two additional engines tested, is greater than any applicable emission standard or FEL, the engine family is deemed to be in non-compliance with applicable emission standards, and the manufacturer must notify the Administrator within 2 working days of such noncompliance.

(2) [Reserved]

(e) Within 30 calendar days of the end of each quarter in which production line testing occurs, each manufacturer

must submit to the Administrator a report which includes the following information:

(1) The location and description of the manufacturer's emission test facilities which were utilized to conduct testing reported pursuant to this section;

(2) Total production and sample size for each engine family;

(3) The applicable standards and/or FELs against which each engine family was tested;

(4) A description of the test engines;

(5) For each test conducted:

(i) A description of the test engine, including:

(A) Configuration and engine family identification;

(B) Year, make, and build date;

(C) Engine identification number;

(D) Number of hours of service accumulated on engine prior to testing; and

(E) Description of Green Engine Factor; how it is determined and how it is applied;

(ii) Location(s) where service accumulation was conducted and description of accumulation procedure and schedule, if applicable;

(iii) Test number, date, test procedure used, initial test results before and after rounding, and final test results for all production line emission tests conducted, whether valid or invalid, and the reason for invalidation of any test results, if applicable;

(iv) A complete description of any adjustment, modification, repair, preparation, maintenance, and testing which was performed on the test engine, has not been reported pursuant to any other paragraph of this subpart, and will not be performed on other production engines;

(v) Any other information the Administrator may request relevant to the determination whether the new engines being manufactured by the manufacturer do in fact conform with the regulations with respect to which the certificate of conformity was issued;

(6) For each failed engine as defined in § 94.510(a), a description of the remedy and test results for all retests as required by § 94.512(g);

(7) The date of the end of the engine manufacturer's model year production for each engine family tested; and

(8) The following signed statement and endorsement by an authorized representative of the manufacturer:

This report is submitted pursuant to Sections 213 and 208 of the Clean Air Act. This production line testing program was conducted in complete conformance with all applicable regulations under 40 CFR part 94. No emission-related changes to production processes or quality control procedures for the engine family tested have been made during this production line testing program that affect engines from the production line. All data and information reported herein is, to the best of (Company Name) knowledge, true and accurate. I am aware of the penalties associated with violations of the Clean Air Act and the regulations thereunder.

(Authorized Company Representative.)

[64 FR 73331, Dec. 29, 1999, as amended at 68 FR 9787, Feb. 28, 2003]

§ 94.509 Maintenance of records; submittal of information.

(a) The manufacturer for any new engine subject to any of the provisions of this subpart must establish, maintain, and retain the following adequately organized and indexed records:

(1) General records. A description of all equipment used to test engines in accordance with § 94.503. The equipment requirements in Subpart B of this part apply to tests performed under this subpart.

(2) Individual records. These records pertain to each production line test conducted pursuant to this subpart and include:

(i) The date, time, and location of each test;

(ii) The method by which the Green Engine Factor was calculated or the number of hours of service accumulated on the test engine when the test began and ended;

(iii) The names of all supervisory personnel involved in the conduct of the production line test;

(iv) A record and description of any adjustment, repair, preparation or modification performed on test engines, giving the date, associated time, justification, name(s) of the authorizing personnel, and names of all supervisory personnel responsible for the conduct of the action;

(v) If applicable, the date the engine was shipped from the assembly plant,

associated storage facility or port facility, and the date the engine was received at the testing facility;

(vi) A complete record of all emission tests performed pursuant to this subpart (except tests performed directly by EPA), including all individual worksheets and/or other documentation relating to each test, or exact copies thereof, in accordance with the record requirements specified in Subpart B of this part;

(vii) A brief description of any significant events during testing not otherwise described under this paragraph (a)(2) of this section, commencing with the test engine selection process and including such extraordinary events as engine damage during shipment.

(3) The manufacturer must establish, maintain and retain general records, pursuant to paragraph (a)(1) of this section, for each test cell that can be used to perform emission testing under this subpart.

(b) The manufacturer must retain all records required to be maintained under this subpart for a period of eight (8) years after completion of all testing. Records may be retained as hard copy (i.e., on paper) or reduced to microfilm, floppy disk, or some other method of data storage, depending upon the manufacturer's record retention procedure; provided, that in every case, all the information contained in the hard copy is retained.

(c) The manufacturer must, upon request by the Administrator, submit the following information with regard to engine production:

(1) Projected production for each configuration within each engine family for which certification has been requested and/or approved.

(2) Number of engines, by configuration and assembly plant, scheduled for production.

(d) Nothing in this section limits the Administrator's discretion to require a manufacturer to establish, maintain, retain or submit to EPA information not specified by this section.

(e) All reports, submissions, notifications, and requests for approval made under this subpart must be addressed to the Designated Officer.

(f) The manufacturer must electronically submit the results of its production line testing using an EPA information format.

§94.510 Compliance with criteria for production line testing.

(a) A failed engine is one whose final test results pursuant to §94.508(c), for one or more of the applicable pollutants, exceed an applicable emission standard or FEL.

(b) A Category 1 or Category 2 engine family is deemed to be in noncompliance, for purposes of this subpart, if at any time throughout the model year, the average of an initial failed engine and the two additional engines tested, is greater than any applicable emission standard or FEL.

[64 FR 73331, Dec. 29, 1999, as amended at 68 FR 9787, Feb. 28, 2003]

§94.511 [Reserved]

§94.512 Suspension and revocation of certificates of conformity.

(a) The certificate of conformity is suspended with respect to any engine that fails a production line test pursuant to §94.510(a), effective from the time the testing of that engine is completed.

(b) The Administrator may suspend the certificate of conformity for an engine family which is in noncompliance pursuant to §94.510(b), thirty days after the engine family is deemed to be in noncompliance.

(c) If the results of testing pursuant to this subpart indicate that engines of a particular family produced at one plant of a manufacturer do not conform to the regulations with respect to which the certificate of conformity was issued, the Administrator may suspend the certificate of conformity with respect to that family for engines manufactured by the manufacturer at all other plants.

(d) The Administrator may suspend a certificate of conformity for any engine family in whole or in part if:

(1) The manufacturer fails to comply with any of the requirements of this subpart.

(2) The manufacturer submits false or incomplete information in any report or information provided to the Administrator under this subpart.

(3) The manufacturer renders inaccurate any test data submitted under this subpart.

(4) An EPA enforcement officer is denied the opportunity to conduct activities authorized in this subpart.

(5) An EPA enforcement officer is unable to conduct activities authorized in § 94.504 for any reason.

(e) The Administrator shall notify the manufacturer in writing of any suspension or revocation of a certificate of conformity in whole or in part; a suspension or revocation is effective upon receipt of such notification or thirty days from the time an engine family is deemed to be in noncompliance under §§ 94.508(d), 94.510(a), or 94.510(b), whichever is earlier, except that the certificate is immediately suspended with respect to any failed engines as provided for in paragraph (a) of this section.

(f) The Administrator may revoke a certificate of conformity for an engine family when the certificate has been suspended pursuant to paragraph (b) or (c) of this section if the remedy is one requiring a design change or changes to the engine and/or emission control system as described in the application for certification of the affected engine family.

(g) Once a certificate has been suspended for a failed engine, as provided for in paragraph (a) of this section, the manufacturer must take the following actions before the certificate is reinstated for that failed engine:

(1) Remedy the nonconformity;

(2) Demonstrate that the engine conforms to applicable standards or family emission limits by retesting if applicable, the engine in accordance with this part; and

(3) Submit a written report to the Administrator, after successful completion of testing on the failed engine, which contains a description of the remedy and test results for each engine in addition to other information that may be required by this part.

(h) Once a certificate for a failed engine family has been suspended pursuant to paragraph (b) or (c) of this section, the manufacturer must take the following actions before the Administrator will consider reinstating the certificate:

(1) Submit a written report to the Administrator which identifies the reason for the noncompliance of the engines, describes the remedy, including a description of any quality control and/or quality assurance measures to be taken by the manufacturer to prevent future occurrences of the problem, and states the date on which the remedies will be implemented.

(2) Demonstrate that the engine family for which the certificate of conformity has been suspended does in fact comply with the regulations of this part by testing engines selected from normal production runs of that engine family. Such testing must comply with the provisions of this subpart. If the manufacturer elects to continue testing individual engines after suspension of a certificate, the certificate is reinstated for any engine actually determined to be in conformance with the applicable standards or family emission limits through testing in accordance with the applicable test procedures, provided that the Administrator has not revoked the certificate pursuant to paragraph (f) of this section.

(i) Once the certificate has been revoked for an engine family, if the manufacturer desires to continue introduction into commerce of a modified version of that family, the following actions must be taken before the Administrator may issue a certificate for that modified family:

(1) If the Administrator determines that the change(s) in engine design may have an effect on emission performance deterioration, the Administrator shall notify the manufacturer, within five working days after receipt of the report in paragraph (h)(1) of this section, whether subsequent testing under this subpart will be sufficient to evaluate the change or changes or whether additional testing will be required; and

(2) After implementing the change or changes intended to remedy the nonconformity, the manufacturer must demonstrate that the modified engine family does in fact conform with the regulations of this part by testing engines selected from normal production runs of that engine family. When both

of these requirements are met, the Administrator shall reissue the certificate or issue a new certificate, as the case may be, to include that family. If this subsequent testing reveals failing data the revocation remains in effect.

(j) At any time subsequent to an initial suspension of a certificate of conformity for a test engine pursuant to paragraph (a) of this section, but not later than 30 days (or such other period as may be allowed by the Administrator) after notification of the Administrator's decision to suspend or revoke a certificate of conformity in whole or in part pursuant to paragraph (b), (c), or (f) of this section, a manufacturer may request a hearing as to whether the tests have been properly conducted or any sampling methods have been properly applied.

(k) Any suspension of a certificate of conformity under paragraphs (a),(b),(c) and (d) of this section:

(1) Shall be made only after the manufacturer concerned has been offered an opportunity for a hearing conducted in accordance with §§ 94.513, 94.514, and 94.515; and

(2) Need not apply to engines no longer in the possession of the manufacturer.

(l) After the Administrator suspends or revokes a certificate of conformity pursuant to this section or voids a certificate of conformity under paragraph § 94.215, and prior to the commencement of a hearing under § 94.513, if the manufacturer demonstrates to the Administrator's satisfaction that the decision to suspend, revoke, or void the certificate was based on erroneous information, the Administrator shall reinstate the certificate.

(m) To permit a manufacturer to avoid storing non-test engines while conducting subsequent testing of the noncomplying family, a manufacturer may request that the Administrator conditionally reinstate the certificate for that family. The Administrator may reinstate the certificate subject to the following condition: the manufacturer must commit to recall all engines of that family produced from the time the certificate is conditionally reinstated if the family fails subsequent testing and must commit to remedy any nonconformity at no expense to the owner.

§ 94.513 Request for public hearing.

(a) If the manufacturer disagrees with the Administrator's decision to suspend or revoke a certificate or disputes the basis for an automatic suspension pursuant to § 94.512(a), the manufacturer may request a public hearing.

(b) The manufacturer's request shall be filed with the Administrator not later than 30 days after the Administrator's notification of his or her decision to suspend or revoke, unless otherwise specified by the Administrator. The manufacturer shall simultaneously serve two copies of this request upon the Designated Officer and file two copies with the Hearing Clerk of the Agency. Failure of the manufacturer to request a hearing within the time provided constitutes a waiver of the right to a hearing. Subsequent to the expiration of the period for requesting a hearing as of right, the Administrator may, in his or her discretion and for good cause shown, grant the manufacturer a hearing to contest the suspension or revocation.

(c) A manufacturer shall include in the request for a public hearing:

(1) A statement as to which configuration(s) within a family is to be the subject of the hearing;

(2) A concise statement of the issues to be raised by the manufacturer at the hearing, except that in the case of the hearing requested under § 94.512(j), the hearing is restricted to the following issues:

(i) Whether tests have been properly conducted (specifically, whether the tests were conducted in accordance with applicable regulations under this part and whether test equipment was properly calibrated and functioning);

(ii) Whether there exists a basis for distinguishing engines produced at plants other than the one from which engines were selected for testing which would invalidate the Administrator's decision under § 94.512(c));

(3) A statement specifying reasons why the manufacturer believes it will prevail on the merits of each of the issues raised; and

(4) A summary of the evidence which supports the manufacturer's position on each of the issues raised.

(d) A copy of all requests for public hearings will be kept on file in the Office of the Hearing Clerk and will be made available to the public during Agency business hours.

§ 94.514 Administrative procedures for public hearing.

(a) The Presiding Officer shall be an Administrative Law Judge appointed pursuant to 5 U.S.C. 3105 (see also 5 CFR part 930).

(b) The Judicial Officer shall be an officer or employee of the Agency appointed as a Judicial Officer by the Administrator, pursuant to this section, who shall meet the qualifications and perform functions as follows:

(1) *Qualifications.* A Judicial Officer may be a permanent or temporary employee of the Agency who performs other duties for the Agency. The Judicial Officer shall not be employed by the Office of Enforcement or have any connection with the preparation or presentation of evidence for a hearing held pursuant to this subpart. The Judicial Officer shall be a graduate of an accredited law school and a member in good standing of a recognized Bar Association of any state or the District of Columbia.

(2) *Functions.* The Administrator may consult with the Judicial Officer or delegate all or part of the Administrator's authority to act in a given case under this section to a Judicial Officer, provided that this delegation does not preclude the Judicial Officer from referring any motion or case to the Administrator when the Judicial Officer determines such referral to be appropriate.

(c) For the purposes of this section, one or more Judicial Officers may be designated by the Administrator. As work requires, a Judicial Officer may be designated to act for the purposes of a particular case.

(d)(1) In the case of a hearing requested under § 94.512(j), when it clearly appears from the data and other information contained in the request for a hearing that no genuine and substantial question of fact or law exists with respect to the issues specified in § 94.513(c)(2), the Administrator may enter an order denying the request for a hearing and reaffirming the original decision to suspend or revoke a certificate of conformity.

(2) In the case of a hearing requested under § 94.513 to challenge a suspension of a certificate of conformity for the reason(s) specified in § 94.512(d), when it clearly appears from the data and other information contained in the request for the hearing that no genuine and substantial question of fact or law exists with respect to the issue of whether the refusal to comply with this subpart was caused by conditions and circumstances outside the control of the manufacturer, the Administrator may enter an order denying the request for a hearing and suspending the certificate of conformity.

(3) Any order issued under paragraph (d)(1) or (d)(2) of this section has the force and effect of a final decision of the Administrator, as issued pursuant to § 94.516.

(4) If the Administrator determines that a genuine and substantial question of fact or law does exist with respect to any of the issues referred to in paragraphs (d)(1) and (d)(2) of this section, the Administrator shall grant the request for a hearing and publish a notice of public hearing in the FEDERAL REGISTER or by such other means as the Administrator finds appropriate to provide notice to the public.

(e) *Filing and service.* (1) An original and two copies of all documents or papers required or permitted to be filed pursuant to this section and § 94.513(c) must be filed with the Hearing Clerk of the Agency. Filing is considered timely if mailed, as determined by the postmark, to the Hearing Clerk within the time allowed by this section and § 94.513(b). If filing is to be accomplished by mailing, the documents must be sent to the address set forth in the notice of public hearing referred to in paragraph (d)(4) of this section.

(2) To the maximum extent possible, testimony will be presented in written form. Copies of written testimony will be served upon all parties as soon as practicable prior to the start of the hearing. A certificate of service will be provided on or accompany each document or paper filed with the Hearing

Clerk. Documents to be served upon the Director of the Engine Programs and Compliance Division must be sent by registered mail to: Director, Engine Programs and Compliance Division 6403–J, U.S. Environmental Protection Agency, 401 M St. SW., Washington, DC 20460. Service by registered mail is complete upon mailing.

(f) *Computation of time.* (1) In computing any period of time prescribed or allowed by this section, except as otherwise provided, the day of the act or event from which the designated period of time begins to run is not included. Saturdays, Sundays, and federal legal holidays are included in computing the period allowed for the filing of any document or paper, except that when the period expires on a Saturday, Sunday, or federal legal holiday, the period is extended to include the next following business day.

(2) A prescribed period of time within which a party is required or permitted to do an act is computed from the time of service, except that when service is accomplished by mail, three days will be added to the prescribed period.

(g) *Consolidation.* The Administrator or the Presiding Officer in his or her discretion may consolidate two or more proceedings to be held under this section for the purpose of resolving one or more issues whenever it appears that consolidation will expedite or simplify consideration of these issues. Consolidation does not affect the right of any party to raise issues that could have been raised if consolidation had not occurred.

(h) *Hearing date.* To the extent possible hearings under § 94.513 will be scheduled to commence within 14 days of receipt of the request for a hearing.

§ 94.515 Hearing procedures.

The procedures provided in 40 CFR 86.1014–84(i) through (s) apply for hearings requested pursuant to § 94.513 regarding suspension, revocation, or voiding of a certificate of conformity.

§ 94.516 Appeal of hearing decision.

The procedures provided in 40 CFR 86.1014–84 (t) through (aa) apply for appeals filed with respect to hearings held pursuant to § 94.515.

§ 94.517 Treatment of confidential information.

Except for information required by § 94.508(e)(2) and quarterly emission test results described in § 94.508(e), information submitted pursuant to this subpart shall be made available to the public by EPA, notwithstanding any claim of confidentiality made by the submitter. The provisions for treatment of confidential information described in § 94.4 apply to the information required by § 94.508(e)(2) and quarterly emission test results described in § 94.508(e).

Subpart G [Reserved]

Subpart H—Recall Regulations

§ 94.701 Applicability.

The requirements of this subpart are applicable to all engines subject to the provisions of this part.

§ 94.702 Definitions.

The definitions in Subpart A of this part apply to this subpart.

§ 94.703 Applicability of 40 CFR part 85, subpart S.

(a) Engines subject to provisions of this part are subject to recall regulations specified in 40 CFR part 85, subpart S, except for the items set forth in this section.

(b) In 40 CFR 85.1801, section 216 of the Clean Air Act applies, rather than section 214 of the Act.

(c) In 40 CFR 85.1802(a), section 213 of the Act applies, rather than section 202 of the Act.

(d) In 40 CFR 85.1803(a) and 85.1805(a)(1) the reference to ''family emission limits'' as defined in this part 94 promulgated under section 213 of the Act applies, rather than the reference to ''family particulate emission limits as defined in 40 CFR part 86 promulgated under section 202 of the Act''.

(e) Throughout the subpart references to ''engines'' apply rather than references to ''vehicles or engines''.

Subpart I—Importation of Nonconforming Engines

§ 94.801 Applicability.

(a) Except where otherwise indicated, this subpart is applicable to importers of engines (and vessels containing engines) for which the Administrator has promulgated regulations under this part prescribing emission standards, that are offered for importation or imported into the United States, but which engines, at the time of importation or being offered for importation, are not covered by certificates of conformity issued under section 213 and section 206(a) of the Clean Air Act (that is, which are nonconforming engines as defined in § 94.2), and this part. Compliance with regulations under this subpart does not relieve any person or entity from compliance with other applicable provisions of the Clean Air Act.

(b) Regulations prescribing further procedures for the importation of engines into the Customs territory of the United States are set forth in U.S. Customs Service regulations (19 CFR chapter I).

[64 FR 73331, Dec. 29, 1999, as amended at 68 FR 9787, Feb. 28, 2003]

§ 94.802 Definitions.

The definitions of Subpart A of this part apply to this subpart.

§ 94.803 Admission.

(a) A nonconforming engine offered for importation may be admitted into the United States pursuant to the provisions of this subpart. Subpart C of this part, including § 94.222, describes how to certify engines installed on vessels before they are imported.

(b) To obtain admission, the importer must submit to the Administrator a written request for approval containing the following:

(1) Identification of the importer of the engine and the importer's address, telephone number, and taxpayer identification number;

(2) Identification of the engine's owner, the owner's address, telephone number, and taxpayer identification number;

(3) Identification of the engine including make, model, identification number, and original production year;

(4) Information indicating the provision in this subpart under which the engine is to be imported, including a demonstration of how it qualifies for the requested exemption;

(5) Identification of the place(s) where the engine is to be stored until EPA approval of the importer's application to the Administrator for final admission;

(6) Authorization for EPA enforcement officers to conduct inspections or testing otherwise permitted by the Act or regulations thereunder; and

(7) Such other information as is deemed necessary by the Administrator.

§ 94.804 Exemptions.

(a) *General provisions.* (1) Unless otherwise specified, any person may apply for the exemptions allowed by this section.

(2) Paragraph (b) of this section describes the provisions that apply to temporary exemptions. Paragraph (c) of this section describes provisions that apply to permanent exemptions.

(3) Applications for exemption under this section shall be mailed to the Designated Officer.

(b) Notwithstanding other requirements of this subpart, a nonconforming engine that qualifies for a temporary exemption under this paragraph (b) may be conditionally admitted into the United States if prior written approval for the conditional admission is obtained from the Administrator. Conditional admission is to be under bond. The Administrator may request that the U.S. Customs Service require a specific bond amount to ensure compliance with the requirements of the Act and this subpart. A written request for a temporary exemption from the Administrator shall contain the information required in § 94.803. Noncompliance with the provisions of this paragraph (b) will be considered unlawful importation and may result in the forfeiture of the total amount of the bond, exportation of the engine, and/or imposition of civil penalties.

(1) *Exemption for repairs or alterations.* A person may conditionally import

under bond a nonconforming engine solely for purpose of repair(s) or alteration(s). The engine may not be operated in the United States other than for the sole purpose of repair or alteration or shipment to the point of repair or alteration and to the port of export. It may not be sold or leased in the United States and is to be exported upon completion of the repair(s) or alteration(s).

(2) *Testing exemption*. A person may conditionally import under bond a nonconforming engine for testing, subject to the requirements of § 94.905. A test engine may be operated in the United States provided that the operation is an integral part of the test. This exemption is limited to a period not exceeding one year from the date of importation unless a request is made by the appropriate importer, and subsequently granted by EPA, concerning the engine in accordance with § 94.905 for a subsequent one-year period.

(3) *Display exemptions*. A person may conditionally import under bond a nonconforming engine solely for display purposes, subject to both of the following requirements:

(i) A display engine may be imported by any person for purposes related to a business or the public interest. Such purposes do not include collections normally inaccessible or unavailable to the public on a daily basis, display of an engine at a dealership, private use, or other purpose that the Administrator determines is not appropriate for display exemptions. A display engine may not be sold or leased in the United States and may not be operated in the United States except for the operation incident and necessary to the display purpose.

(ii) A display exemption is granted for 12 months or for the duration of the display purpose, whichever is shorter. Extensions of up to 12 months each are available upon approval by the Administrator. In no circumstances, however, may the total period of exemption exceed 36 months.

(c) A nonconforming engine that qualifies for a permanent exemption under this paragraph (c) may be admitted into the United States if prior written approval is obtained from the Administrator. A written request for a permanent exemption from the Administrator shall contain the information required in § 94.803. Noncompliance with the provisions of this paragraph (c) will be considered unlawful importation and may result in the exportation of the engine and/or imposition of civil penalties.

(1) *National security exemption*. Notwithstanding any other requirement of this subpart, an engine may be permanently imported into the United States under the national security exemption found in § 94.908.

(2) *Competition exemption*. Notwithstanding any other requirement of this subpart, an engine may be permanently imported into the United States under the competition exemption found in § 94.906(c).

(3) *Incomplete marine engine exemption*. An engine that is intended to be modified prior to being placed into service as a marine engine may be imported in a nonconforming configuration, subject to the following provisions:

(i) The modified engine must be covered by a valid marine engine certificate issued under this part prior to importation and held by a post-manufacture marinizer. (Note: Prior to certification, manufacturers and post-manufacture marinizers may import uncertified engines for testing, as specified in paragraph (b)(2) of this section.)

(ii) The engine may not be placed into non-marine service prior to being installed in a vessel.

(iii) The importer must obtain written approval from the Administrator prior to admission.

(iv) The engine and engine container must be labeled as specified by the Administrator.

(v) A manufacturer importing an engine under this exemption must modify the engine to comply with the requirements of this part.

§ 94.805 Prohibited acts; penalties.

(a) The importation of an engine (including an engine incorporated in an imported marine vessel) which is not covered by a certificate of conformity other than in accordance with this subpart and the entry regulations of the U.S. Customs Service is prohibited. Failure to comply with this section is

a violation of section 213(d) and section 203 of the Act.

(b) Unless otherwise permitted by this subpart, during a period of conditional admission, the importer of an engine may not:

(1) Operate the engine in the United States; or

(2) Sell or lease or offer the engine for sale or lease.

(c) An engine conditionally admitted pursuant to § 94.804 and not otherwise permanently exempted or excluded by the end of the period of conditional admission, or within such additional time as the Administrator and the U.S. Customs Service may allow, is deemed to be unlawfully imported into the United States in violation of section 213(d) and section 203 of the Act, unless the engine has been delivered to the U.S. Customs Service for export or other disposition under applicable Customs laws and regulations by the end of the period of conditional admission. An engine not so delivered is subject to seizure by the U.S. Customs Service.

(d) An importer who violates section 213(d) and section 203 of the Act is subject to a civil penalty under section 205 of the Act and § 94.1106. In addition to the penalty provided in the Act and § 94.1106, where applicable, a person or entity who imports an engine under the exemption provisions of § 94.804 and, who fails to deliver the engine to the U.S. Customs Service by the end of the period of conditional admission is liable for liquidated damages in the amount of the bond required by applicable Customs laws and regulations.

Subpart J—Exclusion and Exemption Provisions

§ 94.901 Purpose and applicability.

The provisions of this subpart identify excluded engines (i.e., engines not covered by the Act) and allow for the exemption of engines from certain provisions of this part. The applicability of the exclusions is described in § 94.903, and the applicability of the exemption allowances is described in §§ 94.904 through 94.909.

§ 94.902 Definitions.

The definitions of Subpart A of this part apply to this subpart.

§ 94.903 Exclusions.

(a) Upon written request with supporting documentation, EPA will make written determinations as to whether certain engines are excluded from applicability of this part. Any engines that are determined to be excluded are not subject to the regulations under this part. Requests to determine whether certain engines are excluded should be sent to the Designated Officer.

(b) EPA will maintain a list of models of engines that have been determined to be excluded from coverage under this part. This list will be available to the public and may be obtained by writing to the address in paragraph (a) of this section.

(c) In addition to the engines excluded in paragraph (a) of this section, certain engines are not subject to the requirements and prohibitions of this part because they are excluded from the definitions of ''marine engine'' in § 94.2.

§ 94.904 Exemptions.

(a) Except as specified otherwise in this subpart, the provisions of §§ 94.904 through 94.913 exempt certain new engines from the standards, other requirements, and prohibitions of this part, except for the requirements of this subpart and the requirements of § 94.1104. Additional requirements may apply for imported engines; these are described in subpart I of this part. Engines may also be exempted from the standards of this part under the provisions of 40 CFR part 1042 or part 1068.

(b)(1) Any person may request a testing exemption subject to the provisions of § 94.905.

(2) Any engine manufacturer may request a national security exemption subject to the provisions of § 94.908.

(3) Engines manufactured for export purposes are exempt without application, subject to the provisions of § 94.909, except as otherwise specified by § 94.909.

(4) Manufacturer-owned engines are exempt without application, subject to the provisions of § 94.906(a).

(5) Display engines are exempt without application, subject to the provisions of § 94.906(b). This does not apply to imported engines (see § 94.804).

(6) Engines used solely for competition are exempt, subject to the provisions of § 94.906(c).

(c) If you want to take an action with respect to an exempted or excluded engine that is prohibited by the exemption or exclusion, such as selling it, you need to certify the engine. We will issue a certificate of conformity if you send us an application for certification showing that you meet all the applicable requirements from this part 94 and pay the appropriate fee. Also, in some cases, we may allow manufacturers to modify the engine as needed to make it identical to engines already covered by a certificate. We would base such an approval on our review of any appropriate documentation. These engines must have emission control information labels that accurately describe their status.

[64 FR 73331, Dec. 29, 1999, as amended at 68 FR 9787, Feb. 28, 2003; 70 FR 40459, July 13, 2005; 75 FR 22981, Apr. 30, 2010]

§ 94.905 Testing exemption.

(a)(1) The Administrator may exempt from the standards and/or other requirements and prohibitions of this part new engines that are being used solely for the purpose of conducting a test program. Any person requesting an exemption for the purpose of conducting a test program must demonstrate the following:

(i) That the proposed test program has a purpose which constitutes an appropriate basis for an exemption in accordance this section;

(ii) That the proposed test program necessitates the granting of an exemption;

(iii) That the proposed test program exhibits reasonableness in scope; and

(iv) That the proposed test program exhibits a degree of oversight and control consonant with the purpose of the test program and EPA's monitoring requirements.

(2) Paragraphs (b), (c), (d), and (e) of this section describe what constitutes a sufficient demonstration for each of the four elements identified in paragraphs (a)(1)(i) through (iv) of this section.

(b) With respect to the purpose of the proposed test program, an appropriate purpose would be research, investigations, studies, demonstrations, technology development, or training, but not national security. A concise statement of purpose is a required item of information.

(c) With respect to the necessity that an exemption be granted, necessity arises from an inability to achieve the stated purpose in a practicable manner without performing or causing to be performed one or more of the prohibited acts under § 94.1103. In appropriate circumstances, time constraints may be a sufficient basis for necessity, but the cost of certification alone, in the absence of extraordinary circumstances, is not a basis for necessity.

(d) With respect to reasonableness, a test program must exhibit a duration of reasonable length and affect a reasonable number of engines. In this regard, required items of information include:

(1) An estimate of the program's duration; and

(2) The maximum number of engines involved.

(e) With respect to control, the test program must incorporate procedures consistent with the purpose of the test and be capable of affording EPA monitoring capability. As a minimum, required items of information include:

(1) The technical nature of the testing;

(2) The location(s) of the testing;

(3) The time or work duration of the testing;

(4) The ownership arrangement with regard to the engines involved in the testing;

(5) The intended final disposition of the engines;

(6) The manner in which the engine identification numbers will be identified, recorded, and made available; and

(7) The means or procedure whereby test results will be recorded.

(f) A manufacturer of new engines may request a testing exemption to cover engines intended for use in test programs planned or anticipated over the course of a subsequent two-year period. Unless otherwise required by the

Director, Engine Programs and Compliance Division, a manufacturer requesting such an exemption need only furnish the information required by paragraphs (a)(1) and (d)(2) of this section along with a description of the recordkeeping and control procedures that will be employed to assure that the engines are used for purposes consistent with paragraph (a) of this section.

(g) For engines being used for the purpose of developing a fundamentally new emission control technology related either to an alternative fuel or an aftertreatment device, the Administrator may exempt the engine from some or all of the applicable standards of this part for the full useful life of the engine, subject to the provisions of paragraphs (a) through (f) of this section.

§ 94.906 Manufacturer-owned exemption, display exemption, and competition exemption.

(a) *Manufacturer-owned exemption.* Any manufacturer-owned engine, as defined by § 94.2, is exempt from § 94.1103, without application, if the manufacturer complies with the following terms and conditions:

(1) The manufacturer must establish, maintain, and retain the following adequately organized and indexed information on each exempted engine:

(i) engine identification number;

(ii) Use of the engine on exempt status; and

(iii) Final disposition of any engine removed from exempt status.

(2) The manufacturer must provide right of entry and access to these records to EPA Enforcement Officers as outlined in § 94.208.

(3) The manufacturer must permanently affix a label to each engine on exempt status, unless the requirement is waived or an alternate procedure is approved by the Director, Engine Programs and Compliance Division. This label should:

(i) Be affixed in a readily visible portion of the engine;

(ii) Be attached in such a manner that cannot be removed without destruction or defacement;

(iii) State in the English language and in block letters and numerals of a color that contrasts with the background of the label, the following information:

(A) The label heading ''Emission Control Information'';

(B) Full corporate name and trademark of manufacturer;

(C) Engine displacement, engine family identification, and model year of engine; or person of office to be contacted for further information about the engine;

(D) The statement ''This engine is exempt from the prohibitions of 40 CFR 94.1103.''

(4) No provision of paragraph (a)(3) of this section prevents a manufacturer from including any other information it desires on the label.

(5) The engine is not used in revenue-generating service, or sold.

(b) *Display exemption.* An uncertified engine that is to be used solely for display purposes, and that will only be operated incident and necessary to the display purpose, and will not be sold unless an applicable certificate of conformity has been obtained for the engine, is exempt without request from the standards of this part. This does not apply to imported engines (see § 94.804).

(c) *Competition exemption.* The Administrator may exempt, upon request, engines that are intended by the manufacturer to be used solely for competition. Engines that are modified after they have been placed into service and are used solely for competition are exempt without request.

[64 FR 73331, Dec. 29, 1999, as amended at 68 FR 9787, Feb. 28, 2003]

§ 94.907 Engine dressing exemption.

(a) *General provisions.* If you are an engine manufacturer, this section allows you to introduce new marine engines into commerce if they are already certified to the requirements that apply to compression-ignition engines under 40 CFR parts 85 and 86 or 40 CFR part 89, 92 or 1039 for the appropriate model year. If you comply with all the provisions of this section, we consider the certificate issued under 40 CFR part 86, 89, 92, or 1039 for each engine to also be a valid certificate of conformity under this part 94 for its

model year, without a separate application for certification under the requirements of this part 94.

(b) *Boat-builder provisions*. If you are not an engine manufacturer, you may install an engine certified for the appropriate model year under 40 CFR part 86, 89, 92, or 1039 in a marine vessel as long as you do not make any of the changes described in paragraph (d)(3) of this section and you meet the requirements of paragraph (e) of this section. If you modify the non-marine engine in any of the ways described in paragraph (d)(3) of this section, we will consider you a manufacturer of a new marine engine. Such engine modifications prevent you from using the provisions of this section.

(c) *Liability*. Engines for which you meet the requirements of this section are exempt from all the requirements and prohibitions of this part, except for those specified in this section. Engines exempted under this section must meet all the applicable requirements from 40 CFR parts 85 and 86 or 40 CFR part 89, 92, or 1039. This paragraph (c) applies to engine manufacturers, boat builders who use such an engine, and all other persons as if the engine were used in its originally intended application. The prohibited acts of § 94.1103(a)(1) apply to these new engines and vessels; however, we consider the certificate issued under 40 CFR part 86, 89, 92, or 1039 for each engine to also be a valid certificate of conformity under this part 94 for its model year. If we make a determination that these engines do not conform to the regulations during their useful life, we may require you to recall them under this part 94 or under 40 CFR part 85, 89, 92, or 1039.

(d) *Specific requirements*. If you are an engine manufacturer and meet all the following criteria and requirements regarding your new marine engine, the engine is eligible for an exemption under this section:

(1) You must produce it by marinizing an engine covered by a valid certificate of conformity from one of the following programs:

(i) Heavy-duty highway engines (40 CFR part 86).

(ii) Land-based nonroad diesel engines (40 CFR part 89 or 1039).

(iii) Locomotive engines (40 CFR part 92).

(2) The engine must have the label required under 40 CFR part 86, 89, 92, or 1039.

(3) You must not make any changes to the certified engine that could reasonably be expected to increase its emissions. For example, if you make any of the following changes to one of these engines, you do not qualify for the engine dressing exemption:

(i) Change any fuel system parameters from the certified configuration, or change, remove, or fail to properly install any other component, element of design, or calibration specified in the engine manufacturer's application for certification. This includes aftertreatment devices and all related components.

(ii) Replacing an original turbocharger, except that small-volume manufacturers of recreational engines may replace an original turbocharger with one that matches the performance of the original turbocharger.

(iii) Modify or design the marine engine cooling or aftercooling system so that temperatures or heat rejection rates are outside the original engine manufacturer's specified ranges.

(4) You must show that fewer than 50 percent of the engine family's total sales in the United States are used in marine applications. This includes engines used in any application, without regard to which company manufactures the vessel or equipment. Show this as follows:

(i) If you are the original manufacturer of the engine, base this showing on your sales information.

(ii) In all other cases, you must get the original manufacturer of the engine to confirm this based on its sales information.

(e) If you are an engine manufacturer or boat builder using this exemption, you must do all of the following:

(1) Make sure the original engine label will remain clearly visible after installation in the vessel.

(2) Add a permanent supplemental label to the engine in a position where it will remain clearly visible after installation in the vessel. In your engine label, do the following:

(i) Include the heading: ''Marine Engine Emission Control Information''.

(ii) Include your full corporate name and trademark.

(iii) State: ''This engine was marinized without affecting its emission controls.''

(iv) State the date you finished marinizing the engine (month and year).

(3) Send a signed letter to the Designated Officer by the end of each calendar year (or less often if we tell you) with all the following information:

(i) Identify your full corporate name, address, and telephone number.

(ii) List the engine models for which you expect to use this exemption in the coming year and describe your basis for meeting the sales restrictions of paragraph (d)(4) of this section.

(iii) State: ''We prepare each listed engine model for marine application without making any changes that could increase its certified emission levels, as described in 40 CFR 94.907.''

(f) *Engine inventories.* In general you may use up your inventory of engines that are not certified to new marine emission standards if they were originally manufactured before the date of the new standards. However, stockpiling these engines is a violation of § 94.1103(a)(1)(i)(A).

(g) *Failure to comply.* If your engines do not meet the criteria listed in paragraph (d) of this section, they will be subject to the standards, requirements, and prohibitions of this part 94 and the certificate issued under 40 CFR part 86, 89, 92, or 1039 will not be deemed to also be a certificate issued under this part 94. Introducing these engines into commerce without a valid exemption or certificate of conformity under this part violates the prohibitions in 40 CFR 94.1103(a)(1).

(h) *Data submission.* (1) If you are the original manufacturer and marinizer of an exempted engine, you must send us emission test data on the appropriate marine duty cycles. You can include the data in your application for certification or in the letter described in paragraph (e)(3) of this section.

(2) If you are the original manufacturer of an exempted engine that is marinized by a post-manufacture marinizer, you may be required to send us emission test data on the appropriate marine duty cycles. If such data are requested you will be allowed a reasonable amount of time to collect the data.

(i) *Participation in averaging, banking and trading.* Engines adapted for marine use under this section may not generate or use emission credits under this part 94. These engines may generate credits under the ABT provisions in 40 CFR part 86, 89, 92, or 1039, as applicable. These engines must use emission credits under 40 CFR part 86, 89, 92, or 1039 as applicable if they are certified to an FEL that exceeds an applicable standard.

(j) *Operator requirements.* The requirements for vessel manufacturers, owners, and operators in subpart K of this part apply to these engines whether they are certified under this part 94 or another part as allowed by this section.

[70 FR 40459, July 13, 2005]

§ 94.908 National security exemption.

(a)(1) Any marine engine, otherwise subject to this part, that is used in a vessel that exhibits substantial features ordinarily associated with military combat such as armor, permanently affixed weaponry, specialized electronic warfare systems, unique stealth performance requirements, and/or unique combat maneuverability requirements and which will be owned and/or used by an agency of the federal government with the responsibility for national defense, will be exempt from the regulations in this subpart for reasons of national security. No request for this exemption is necessary.

(2) Manufacturers may request a national security exemption for any marine engine, otherwise subject to this part, which does not meet the conditions described in paragraph (a)(1) of this section. A manufacturer requesting a national security exemption must state the purpose for which the exemption is required and the request must be endorsed by an agency of the federal government charged with responsibility for national defense.

(b) EPA will maintain a list of models of marine engines (and the vessels which use them) that have been granted a national security exemption under paragraph (a)(2) of this section. This

list will be available to the public and may be obtained by writing to the Designated Officer.

(c) Manufacturers must add a legible label, written in block letters in English, to each engine exempted under this section. The label must be permanently secured to a readily visible part of the engine needed for normal operation and not normally requiring replacement, such as the engine block. This label must include at least the following items:

(1) The label heading ''EMISSION CONTROL INFORMATION''.

(2) Your corporate name and trademark.

(3) Engine displacement, engine family identification (as applicable), and model year of the engine or whom to contact for further information.

(4) The statement ''THIS ENGINE HAS AN EXEMPTION FOR NATIONAL SECURITY UNDER 40 CFR 94.908.''.

[64 FR 73331, Dec. 29, 1999, as amended at 69 FR 39213, June 29, 2004]

§ 94.909 Export exemptions.

(a) A new engine intended solely for export, and so labeled or tagged on the outside of any container and on the engine, is subject to the provisions of § 94.1103, unless the importing country has new marine engine emission standards which differ from EPA standards.

(b) For the purpose of paragraph (a) of this section, a country having no standards whatsoever is deemed to be a country having emission standards which differ from EPA standards.

(c) It is a condition of any exemption for the purpose of export under paragraph (a) of this section, that such exemption is void ab initio with respect to a new engine intended solely for export, where such engine is sold, or offered for sale, to an ultimate purchaser or otherwise distributed or introduced into commerce in the United States for purposes other than export.

§ 94.910 Granting of exemptions.

(a) If upon completion of the review of an exemption request made pursuant to § 94.905 or § 94.908, EPA determines it is appropriate to grant such an exemption, a memorandum of exemption is to be prepared and submitted to the person requesting the exemption. The memorandum is to set forth the basis for the exemption, its scope, and such terms and conditions as are deemed necessary. Such terms and conditions generally include, but are not limited to, agreements by the applicant to conduct the exempt activity in the manner described to EPA, create and maintain adequate records accessible to EPA at reasonable times, employ labels for the exempt engines setting forth the nature of the exemption, take appropriate measures to assure that the terms of the exemption are met, and advise EPA of the termination of the activity and the ultimate disposition of the engines.

(b) Any exemption granted pursuant to paragraph (a) of this section is deemed to cover any subject engine only to the extent that the specified terms and conditions are complied with. A breach of any term or condition causes the exemption to be void ab initio with respect to any engine. Consequently, the causing or the performing of an act prohibited under § 94.1103(a)(1) or (a)(3), other than in strict conformity with all terms and conditions of this exemption, renders the person to whom the exemption is granted, and any other person to whom the provisions of § 94.1103(a) are applicable, liable to suit under sections 204 and 205 of the Act.

§ 94.911 Submission of exemption requests.

Requests for exemption or further information concerning exemptions and/or the exemption request review procedure should be addressed to the Designated Officer.

§ 94.912 Optional certification to land-based standards for auxiliary marine engines.

This section applies to auxiliary marine engines that are identical to certified land-based engines. See § 94.907 for provisions that apply to propulsion marine engines or auxiliary marine engines that are modified for marine applications.

(a) *General provisions.* If you are an engine manufacturer, this section allows you to introduce new marine engines into commerce if they are already certified to the requirements

that apply to compression-ignition engines under 40 CFR part 89 or 1039 for the appropriate model year. If you comply with all the provisions of this section, we consider the certificate issued under 40 CFR part 86 or 1039 for each engine to also be a valid certificate of conformity under this part 94 for its model year, without a separate application for certification under the requirements of this part 94.

(b) *Boat builder provisions*. If you are not an engine manufacturer, you may install an engine certified for land-based applications in a marine vessel as long as you meet all the qualifying criteria and requirements specified in paragraphs (d) and (e) of this section. If you modify the non-marine engine, we will consider you a manufacturer of a new marine engine. Such engine modifications prevent you from using the provisions of this section.

(c) *Liability*. Engines for which you meet the requirements of this section are exempt from all the requirements and prohibitions of this part, except for those specified in this section. Engines exempted under this section must meet all the applicable requirements from 40 CFR part 89 or 1039. This paragraph (c) applies to engine manufacturers, boat builders who use such an engine, and all other persons as if the engine were used in its originally intended application. The prohibited acts of § 94.1103(a)(1) apply to these new engines and vessels; however, we consider the certificate issued under 40 CFR part 89 or 1039 for each engine to also be a valid certificate of conformity under this part 94 for its model year. If we make a determination that these engines do not conform to the regulations during their useful life, we may require you to recall them under this part 94 or under 40 CFR part 89 or 1068.

(d) *Qualifying criteria*. If you are an engine manufacturer and meet all the following criteria and requirements regarding your new marine engine, the engine is eligible for an exemption under this section:

(1) The marine engine must be identical in all material respects to a land-based engine covered by a valid certificate of conformity for the appropriate model year showing that it meets emission standards for engines of that power rating under 40 CFR part 89 or 1039.

(2) The engines may not be used as propulsion marine engines.

(3) You must show that the number of auxiliary marine engines from the engine family must be smaller than the number of land-based engines from the engine family sold in the United States, as follows:

(i) If you are the original manufacturer of the engine, base this showing on your sales information.

(ii) In all other cases, you must get the original manufacturer of the engine to confirm this based on its sales information.

(e) *Specific requirements*. If you are an engine manufacturer or boat builder using this exemption, you must do all of the following:

(1) Make sure the original engine label will remain clearly visible after installation in the vessel. This label or a supplemental label must identify that the original certification is valid for marine auxiliary applications.

(2) Send a signed letter to the Designated Officer by the end of each calendar year (or less often if we tell you) with all the following information:

(i) Identify your full corporate name, address, and telephone number.

(ii) List the engine models you expect to produce under this exemption in the coming year.

(iii) State: ''We produce each listed engine model for marine application without making any changes that could increase its certified emission levels, as described in 40 CFR 94.907.''

(3) If you are the certificate holder, you must describe in your application for certification how you plan to produce engines for both land-based and auxiliary marine applications, including projected sales of auxiliary marine engines to the extent this can be determined. If the projected marine sales are substantial, we may ask for the year-end report of production volumes to include actual auxiliary marine engine sales.

(f) *Failure to comply*. If your engines do not meet the criteria listed in paragraph (d) of this section, they will be subject to the standards, requirements, and prohibitions of this part 94 and the certificate issued under 40 CFR part 89

or 1039 will not be deemed to also be a certificate issued under this part 94. Introducing these engines into commerce without a valid exemption or certificate of conformity under this part violates the prohibitions in 40 CFR 94.1103(a)(1).

(g) *Participation in averaging, banking and trading.* Engines using this exemption may not generate or use emission credits under this part 94. These engines may generate credits under the ABT provisions in 40 CFR part 89 or 1039, as applicable. These engines must use emission credits under 40 CFR part 89 or 1039 as applicable if they are certified to an FEL that exceeds an applicable standard.

(h) *Operator requirements.* The requirements for vessel manufacturers, owners, and operators in subpart K of this part apply to these engines whether they are certified under this part 94 or another part as allowed by this section.

[70 FR 40460, July 13, 2005]

§94.913 Staged-assembly exemption.

You may ask us to provide a temporary exemption to allow you to complete production of your engines at different facilities, as long as you maintain control of the engines until they are in their certified configuration. We may require you to take specific steps to ensure that such engines are in their certified configuration before reaching the ultimate purchaser. You may request an exemption under this section in your application for certification, or in a separate submission to the Designated Officer.

[70 FR 40461, July 13, 2005]

§94.914 Emergency vessel exemption.

(a) Except as specified in paragraph (c) of this section, the prohibitions in §94.1103(a)(1) do not apply to a new engine that is subject to Tier 2 standards according to the following provisions:

(1) The engine must be intended for installation in a lifeboat or a rescue boat as specified in 40 CFR 1042.625(a)(1)(i) or (ii).

(2) This exemption is available from the initial effective date for the Tier 2 standards until the engine model (or an engine of comparable size, weight, and performance) has been certified as complying with the Tier 2 standards and Coast Guard requirements. For example, this exemption would apply for new engine models that have not yet been certified to the Tier 2 standards.

(3) The engine must meet the Tier 1 emission standards specified in §94.8.

(b) If you introduce an engine into U.S. commerce under this section, you must meet the labeling requirements in §94.212, but add the following statement instead of the compliance statement in §94.212(b)(6):

THIS ENGINE DOES NOT COMPLY WITH CURRENT U.S. EPA EMISSION STANDARDS UNDER 40 CFR 94.914 AND IS FOR USE SOLELY IN LIFEBOATS OR RESCUE BOATS (COAST GUARD APPROVAL SERIES 160.135 OR 160.156). INSTALLATION OR USE OF THIS ENGINE IN ANY OTHER APPLICATION MAY BE A VIOLATION OF FEDERAL LAW SUBJECT TO CIVIL PENALTY.

(c) Introducing into commerce a vessel containing an engine exempted under this section violates the prohibitions in §94.1103(a)(1) where the vessel is not a lifeboat or rescue boat, unless it is exempt under a different provision. Similarly, using such an engine or vessel as something other than a lifeboat or rescue boat as specified in paragraph (a) of this section violates the prohibitions in §94.1103(a)(1), unless it is exempt under a different provision.

[73 FR 37197, June 30, 2008]

Subpart K—Requirements Applicable to Vessel Manufacturers, Owners, and Operators

SOURCE: 68 FR 9787, Feb. 28, 2003, unless otherwise noted.

§94.1001 Applicability.

The requirements of this subpart are applicable to manufacturers, owners, and operators of marine vessels that contain Category 3 engines subject to the provisions of subpart A of this part, except as otherwise specified.

§94.1002 Definitions.

The definitions of subpart A of this part apply to this subpart.

§ 94.1003 Production testing, in-use testing, and inspections.

(a)–(b) [Reserved]

(c) Manufacturers, owners and operators must allow emission tests and inspections to be conducted and must provide reasonable assistance to perform such tests or inspections.

§ 94.1004 Maintenance, repair, adjustment, and recordkeeping.

(a) Unless otherwise approved by the Administrator, all owners and operators of Category 3 engines subject to the provisions of this part shall ensure that all emission-related maintenance is performed, as specified in the maintenance instructions provided by the certifying manufacturer in compliance with § 94.211.

(b) Unless otherwise approved by the Administrator, all maintenance, repair, adjustment, and alteration of Category 3 engines subject to the provisions of this part performed by any owner, operator or other maintenance provider that is not covered by paragraph (a) of this section shall be performed, using good engineering judgment, in such a manner that the engine continues (after the maintenance, repair, adjustment or alteration) to meet the emission standards it was certified as meeting prior to the need for service. Adjustments are limited to the range specified by the engine manufacturer in the approved application for certification.

(c) A Category 3 engine may not be adjusted or altered contrary to the requirements of § 94.11 or paragraph (b) of this section, except as allowed by § 94.1103(b)(2). If such an adjustment or alteration occurs, the engine must be returned to a configuration allowed by this part within two hours of operation. Each two-hour period during which there is noncompliance is a separate violation. The following provisions apply to adjustments or alterations made under § 94.1103(b)(2):

(1) In the case of an engine that is adjusted or altered under § 94.1103(b)(2)(i), there is no violation under this paragraph (c) for engine operation before completion of the repair or replacement procedure. The provisions of paragraph (c) introductory text apply to all operation following completion of the repair or replacement procedure.

(2) In the case of an engine that is adjusted or altered under § 94.1103(b)(2)(ii), there is no violation under this paragraph (c) if the engine operates for less than two hours following the conclusion of the emergency that prompted the adjustment or alteration before the emission-control system is restored to proper functioning. The provisions of paragraph (c) introductory text apply to all operation that occurs after this two-hour period.

(d) The owner and operator of the engine shall maintain on board the vessel records of all maintenance, repair, and adjustment that could reasonably affect the emission performance of any Category 3 engine subject to the provision of this part. Owners and operators shall also maintain, on board the vessel, records regarding certification, parameter adjustment, and fuels used. For engines that are automatically adjusted electronically, all adjustments must be logged automatically. Owners and operators shall make these records available to EPA upon request. These records must include the following:

(1) [Reserved]

(2) The Technical File, Record Book of Engine Parameters, and bunker delivery notes that are required by the Annex VI Technical Code (incorporated by reference in § 94.5).

(3) Specific descriptions of engine maintenance, repair, adjustment, and alteration (including rebuilding). The descriptions must include at least the date, time, and nature of the maintenance, repair, adjustment, or alteration and the position of the vessel when the maintenance, repair, adjustment, or alteration was made.

(4) Emission-related maintenance instructions provided by the manufacturer.

(e) For each marine vessel containing a Category 3 engine, the owner shall annually review the vessel's records and submit to EPA a signed statement certifying compliance during the preceding year with the requirements of this part that are applicable to owners and operators of such vessels. Alternately, if review of the vessel's records indicates that there has been one or more violations of the requirements of

this part, the owner shall submit to EPA a signed statement specifying the noncompliance, including the nature of the noncompliance, the time of the noncompliance, and any efforts made to remedy the noncompliance. The statement of compliance (or noncompliance) required by this paragraph shall be signed by the executive with responsibility for marine activities of the owner. If the vessel is operated by a different business entity than the vessel owner, the reporting requirements of this paragraph (e) apply to both the owner and the operator. Compliance with these review and certification requirements by either the vessel owner or the vessel operator with respect to a compliance statement will be considered compliance with these requirements by both of these parties for that compliance statement. The executive(s) may authorize a captain or other primary operator to conduct this review and submit the certification, provided that the certification statement is accompanied by written authorization for that individual to submit such statements. The Administrator may waive the requirements of this paragraph when equivalent assurance of compliance is otherwise available.

[64 FR 73331, Dec. 29, 1999, as amended at 70 FR 40461, July 13, 2005]

Subpart L—General Enforcement Provisions and Prohibited Acts

§94.1101 Applicability.

The requirements of this subpart are applicable to all persons with respect to engines subject to the provisions of Subpart A of this part.

§94.1102 Definitions.

The definitions of subpart A of this part apply to this subpart.

§94.1103 Prohibited acts.

(a) The following acts and the causing thereof are prohibited:

(1)(i)(A) In the case of a manufacturer of new engines, the sale, the offering for sale, the introduction into commerce, the delivery for introduction into commerce, or the distribution in commerce of any new engine that is subject to the standards of this part, unless such engine is covered by a certificate of conformity issued (and in effect) under regulations found in this part.

(B) The manufacture of an engine for the purpose of an act listed in paragraph (a)(1)(i)(A) of this section unless such engine is covered by a certificate of conformity issued (and in effect) under regulations found in this part prior to its introduction into commerce.

(ii) In the case of any person, except as provided in Subpart I of this part, the importation into the United States of any engine manufactured on or after the implementation date of the applicable emission limits for the relevant engine, unless such engine is covered by a certificate of conformity issued (and in effect) under regulations found in this part.

(2)(i) For a person to fail or refuse to permit access to or copying of records or to fail to make reports or provide information required under this part.

(ii) For a person to fail or refuse to permit entry, testing, or inspection authorized under this part.

(iii) For a person to fail or refuse to perform tests, or to have tests performed as required by this part.

(iv) For a person to fail to establish or maintain records as required under this part.

(v) For an owner or operator of a vessel using a Category 3 engine to refuse to allow the in-use testing described in §94.1003 to be performed.

(vi) For a manufacturer, owner or operator of a Category 3 engine to fail to provide maintenance instructions as required by §94.211.

(3)(i) For a person to remove or render inoperative a device or element of design installed on or in an engine in compliance with regulations under this part, or to set any adjustable parameter to a setting outside of the range specified by the manufacturer, as approved in the application for certification by the Administrator (except as allowed by §§94.1003 and 94.1004).

(ii) For a person to manufacture, sell or offer to sell, or install, a part or component intended for use with, or as

part of, an engine, where a principal effect of the part or component is to bypass, defeat, or render inoperative a device or element of design installed on or in an engine in compliance with regulations issued under this part, and where the person knows or should know that the part or component is being offered for sale or installed for this use or put to such use.

(iii) for a person to deviate from the provisions of § 94.11 when rebuilding an engine (or rebuilding a portion of an engine or engine system).

(4) For a manufacturer of a new engine subject to standards prescribed under this part:

(i) To sell, offer for sale, or introduce or deliver for introduction into commerce, a new engine unless the manufacturer has complied with the requirements of § 94.1107.

(ii) To sell, offer for sale, or introduce or deliver for introduction into commerce, a new engine unless all required labels and tags are affixed to the engine in accordance with § 94.212.

(iii) To fail or refuse to comply with the requirements of § 94.1108.

(iv) Except as provided in § 94.211, to provide directly or indirectly in any communication to the ultimate purchaser or a subsequent purchaser that the coverage of a warranty under the Act is conditioned upon use of a part, component, or system manufactured by the manufacturer or a person acting for the manufacturer or under its control, or conditioned upon service performed by such persons.

(v) To fail or refuse to comply with the terms and conditions of the warranty under § 94.1107.

(5) For a manufacturer of marine vessels to distribute in commerce, sell, offer for sale, or deliver for introduction into commerce a new vessel containing an engine not covered by a certificate of conformity applicable for an engine model year the same as or later than the calendar year in which the manufacture of the new vessel is initiated. This prohibition covers improper installation in a manner such that the installed engine would not be covered by the engine manufacturer's certificate. Improper installation would include, but is not limited to, failure to follow the engine manufacturer's instructions related to engine cooling, exhaust aftertreatment, emission sampling ports, or any other emission-related component, parameter, or setting. In general, you may use up your normal inventory of engines not certified to new emission standards if they were built before the date of the new standards. However, we consider stockpiling of these engines to be a violation of paragraph (a)(1)(i)(A) of this section. (Note: For the purpose of this paragraph (a)(5), the manufacture of a vessel is initiated when the keel is laid, or the vessel is at a similar stage of construction.)

(6) For any person to install a recreational marine engine in a vessel that is manufactured on or after the implementation date of the applicable standards and that is not a recreational vessel.

(7)(i) For an owner or operator of a vessel using a Category 3 engine to fail or refuse to ensure that an engine is properly adjusted as set forth in § 94.1004.

(ii) For an owner or operator of a vessel using a Category 3 to fail to maintain or repair an engine as set forth in § 94.1004.

(iii) For an owner or operator of a vessel using a Category 3 engine to operate an engine in violation of the requirements of § 94.1004(c).

(iv) For an owner or operator of a vessel using a Category 3 engine to fail to comply with any applicable provision in this part for recordkeeping, reporting, or submission of information to EPA, including the annual certification requirements of § 94.1004.

(8) For an owner or operator of a vessel installing a replacement engine under the provisions of paragraph (b)(4) of this section to make modifications to significantly increase the value of the vessel within six months after installing the replacement engine.

(b) For the purposes of enforcement of this part, the following apply:

(1) Nothing in paragraph (a)(3) of this section is to be construed to require the use of any manufacturer's parts in maintaining or repairing an engine.

(2)(i) Actions for the purpose of repair or replacement of a device or element of design or any other item are not considered prohibited acts under

paragraph (a)(3)(i) of this section if the action is a necessary and temporary procedure, the device or element is replaced upon completion of the procedure, and the action results in the proper functioning of the device or element of design.

(ii) Actions for emergency purposes are not considered prohibited acts under paragraph (a)(3)(i) of this section if the action is a necessary and temporary procedure and the device or element is replaced such that the proper functioning of the device or element of design is restored as soon as possible.

(3) Where the Administrator determines that no engine that is certified to the requirements of this part is produced by any manufacturer with the appropriate physical or performance characteristics to repower a vessel, the Administrator may allow an engine manufacturer to introduce into commerce a replacement engine without complying with all of the otherwise applicable requirements of this part. Such engine shall not be subject to the prohibitions of paragraph (a)(1) of this section, subject to all the following provisions:

(i) The engine requiring replacement is not certified or is certified to emission standards that are less stringent than those in effect when the replacement engine is built.

(ii) The engine manufacturer or its agent takes ownership and possession of the engine being replaced or confirms that the engine has been destroyed.

(iii) If the engine being replaced was not certified to any emission standards under this part, the replacement engine must have a permanent label with your corporate name and trademark and the following language, or similar alternate language approved by the Administrator:

THIS ENGINE DOES NOT COMPLY WITH U.S. EPA MARINE EMISSION REQUIREMENTS. SELLING OR INSTALLING THIS ENGINE FOR ANY PURPOSE OTHER THAN TO REPLACE A MARINE ENGINE BUILT BEFORE JANUARY 1, [Insert appropriate year reflecting when the earliest tier of standards began to apply to engines of that size and type] MAY BE A VIOLATION OF FEDERAL LAW SUBJECT TO CIVIL PENALTY.

(iv) If the engine being replaced was certified to emission standards less stringent than those in effect when you produce the replacement engine, the replacement engine must have a permanent label with your corporate name and trademark and the following language, or similar alternate language approved by the Administrator:

THIS ENGINE COMPLIES WITH U.S. EPA MARINE EMISSION REQUIREMENTS FOR [Insert appropriate year reflecting when the Tier 1 or Tier 2 standards for the replaced engine began to apply] ENGINES UNDER 40 CFR 94.1103(b)(3). SELLING OR INSTALLING THIS ENGINE FOR ANY PURPOSE OTHER THAN TO REPLACE A MARINE ENGINE BUILT BEFORE JANUARY 1, [Insert appropriate year reflecting when the next tier of emission standards began to apply] MAY BE A VIOLATION OF FEDERAL LAW SUBJECT TO CIVIL PENALTY.

(v) Where the replacement engine is intended to replace an engine that is certified to emission standards that are less stringent than those in effect when the replacement engine is built, the replacement engine shall be identical in all material respects to a certified configuration of the same or later model year as the engine being replaced.

(vi) Engines sold pursuant to the provisions of this paragraph will neither generate nor use emission credits and will not be part of any accounting under the averaging, banking and trading program.

(vii) In cases where an engine is to be imported for replacement purposes under the provisions of this paragraph (b)(3) of this section, the term ''engine manufacturer'' shall not apply to an individual or other entity that does not possess a current Certificate of Conformity issued by EPA under this part; and

(viii) The provisions of this section may not be used to circumvent emission standards that apply to new engines under this part.

(4) An engine manufacturer may make the determination related to replacement engines described in paragraph (b)(3) of this section instead of the Administrator, if the new engine is needed to replace an engine that has experienced catastrophic failure. The engine manufacturer must consider whether certified engines are available from its own product lineup or that of

the manufacturer of the engine being replaced (if different). The engine manufacturer must keep records explaining why a certified engine was not available and make these records available upon request.

[64 FR 73331, Dec. 29, 1999, as amended at 67 FR 68347, Nov. 8, 2002; 68 FR 9788, Feb. 28, 2003; 70 FR 40461, July 13, 2005]

§ 94.1104 General enforcement provisions.

(a) *Information collection provisions.* (1)(i) Every manufacturer of new engines and other persons subject to the requirements of this part must establish and maintain records, perform tests, make reports and provide information the Administrator may reasonably require to determine whether the manufacturer or other person has acted or is acting in compliance with this part or to otherwise carry out the provisions of this part, and must, upon request of an officer or employee duly designated by the Administrator, permit the officer or employee at reasonable times to have access to and copy such records. The manufacturer shall comply in all respects with the requirements of subpart E of this part.

(ii) Every manufacturer or owner of engines exempted from the standards or requirements of this part must establish and maintain records, perform tests, make reports and provide information the Administrator may reasonably require regarding the emissions of such engines.

(2) For purposes of enforcement of this part, an officer or employee duly designated by the Administrator, upon presenting appropriate credentials, is authorized:

(i) To enter, at reasonable times, any establishment of the manufacturer, or of any person whom the manufacturer engaged to perform any activity required under paragraph (a)(1) of this section, for the purposes of inspecting or observing any activity conducted pursuant to paragraph (a)(1) of this section; and

(ii) To inspect records, files, papers, processes, controls, and facilities used in performing an activity required by paragraph (a)(1) of this section, by the manufacturer or by a person whom the manufacturer engaged to perform the activity.

(b) *Exemption provision.* The Administrator may exempt a new engine from § 94.1103 upon such terms and conditions as the Administrator may find necessary for the purpose of export, research, investigations, studies, demonstrations, or training, or for reasons of national security, or for other purposes allowed by subpart J of this part.

(c) *Importation provision.* (1) A new engine, offered for importation or imported by a person in violation of § 94.1103 is to be refused admission into the United States, but the Secretary of the Treasury and the Administrator may, by joint regulation, provide for deferring a final determination as to admission and authorizing the delivery of such an engine offered for import to the owner or consignee thereof upon such terms and conditions (including the furnishing of a bond) as may appear to them appropriate to insure that the engine will be brought into conformity with the standards, requirements, and limitations applicable to it under this part.

(2) If an engine is finally refused admission under this paragraph (c), the Secretary of the Treasury shall cause disposition thereof in accordance with the customs laws unless it is exported, under regulations prescribed by the Secretary, within 90 days of the date of notice of the refusal or additional time as may be permitted pursuant to the Treasury regulations.

(3) Disposition in accordance with the customs laws may not be made in such manner as may result, directly or indirectly, in the sale, to the ultimate consumer, of a new engine that fails to comply with applicable standards of the Administrator under this part.

(d) *Export provision.* A new engine intended solely for export, and so labeled or tagged on the outside of the container if used and on the engine, shall be subject to the provisions of § 94.1103, except that if the country that is to receive the engine has emission standards that differ from the standards prescribed under subpart A of this part, then the engine must comply with the standards of the country that is to receive the engine.

(e) *Recordkeeping*. Except where specified otherwise, records required by this part must be kept for eight (8) years.

§94.1105 Injunction proceedings for prohibited acts.

(a) The district courts of the United States have jurisdiction to restrain violations of §94.1103(a).

(b) Actions to restrain violations of §94.1103(a) must be brought by and in the name of the United States. In an action, subpoenas for witnesses who are required to attend a district court in any district may run into any other district.

§94.1106 Penalties.

This section specifies actions that are prohibited and the maximum civil penalties that we can assess for each violation. The maximum penalty values listed in paragraphs (a) and (c) of this section are shown for calendar year 2004. As described in paragraph (d) of this section, maximum penalty limits for later years are set forth in 40 CFR part 19.

(a) *Violations*. A violation of the requirements of this subpart is a violation of the applicable provisions of the Act, including sections 213(d) and 203, and is subject to the penalty provisions thereunder.

(1) A person who violates §94.1103(a)(1), (a)(4), (a)(5), (a)(6), or (a)(7)(iv) or a manufacturer or dealer who violates §94.1103(a)(3)(i) or (iii) or §94.1103(a)(7) is subject to a civil penalty of not more than $32,500 for each violation.

(2) A person other than a manufacturer or dealer who violates §94.1103(a)(3)(i) or (iii) or §94.1103(a)(7)(i), (ii), or (iii) or any person who violates §94.1103(a)(3)(ii) is subject to a civil penalty of not more than $2,750 for each violation.

(3) A violation with respect to §94.1103(a)(1), (a)(3)(i), (a)(3)(iii), (a)(4), or (a)(5), (a)(7) constitutes a separate offense with respect to each engine.

(4) A violation with respect to §94.1103(a)(3)(ii) constitutes a separate offense with respect to each part or component. Each day of a violation with respect to §94.1103(a)(5) or (a)(7)(iv) constitutes a separate offense.

(5) Each two hour period of a violation with respect to §94.1103(a)(7)(iii) constitutes a separate offense. A violation of §94.1103(a)(7)(iii) lasting less than two hours constitutes a single offense.

(b) *Civil actions*. The Administrator may commence a civil action to assess and recover any civil penalty under paragraph (a) of this section.

(1) An action under this paragraph (b) may be brought in the district court of the United States for the district in which the defendant resides or has the Administrator's principal place of business, and the court has jurisdiction to assess a civil penalty.

(2) In determining the amount of a civil penalty to be assessed under this paragraph (b), the court is to take into account the gravity of the violation, the economic benefit or savings (if any) resulting from the violation, the size of the violator's business, the violator's history of compliance with Title II of the Act, action taken to remedy the violation, the effect of the penalty on the violator's ability to continue in business, and such other matters as justice may require.

(3) In any such action, subpoenas for witnesses who are required to attend a district court in any district may run into any other district.

(c) *Administrative assessment of certain penalties*. (1) Administrative penalty authority. Subject to 42 U.S.C. 7524(c), in lieu of commencing a civil action under paragraph (b) of this section, the Administrator may assess any civil penalty prescribed in paragraph (a) of this section, except that the maximum amount of penalty sought against each violator in a penalty assessment proceeding shall not exceed $270,000, unless the Administrator and the Attorney General jointly determine that a matter involving a larger penalty amount is appropriate for administrative penalty assessment. Any such determination by the Administrator and the Attorney General is not subject to judicial review. Assessment of a civil penalty shall be by an order made on the record after opportunity for a hearing held in accordance with the procedures found at part 22 of this chapter. The Administrator may compromise, or remit, with or without conditions, any

administrative penalty which may be imposed under this section.

(2) *Determining amount.* In determining the amount of any civil penalty assessed under this paragraph (c), the Administrator shall take into account the gravity of the violation, the economic benefit or savings (if any) resulting from the violation, the size of the violator's business, the violator's history of compliance with Title II of the Act, action taken to remedy the violation, the effect of the penalty on the violator's ability to continue in business, and such other matters as justice may require.

(3) *Effect of administrator's action.* (i) Action by the Administrator under this paragraph (c) does not affect or limit the Administrator's authority to enforce any provisions of the Act; except that any violation with respect to which the Administrator has commenced and is diligently prosecuting an action under this paragraph (c), or for which the Administrator has issued a final order not subject to further judicial review and for which the violator has paid a penalty assessment under this paragraph shall not be the subject of a civil penalty action under paragraph (b) of this section.

(ii) No action by the Administrator under this paragraph (c) shall affect a person's obligation to comply with a section of this part.

(4) *Finality of order.* An order issued under this paragraph (c) is to become final 30 days after its issuance unless a petition for judicial review is filed under paragraph (c)(5) of this section.

(5) *Judicial review.* A person against whom a civil penalty is assessed in accordance with this paragraph (c) may seek review of the assessment in the United States District Court for the District of Columbia or for the district in which the violation is alleged to have occurred, in which such person resides, or where the person's principal place of business is located, within the 30-day period beginning on the date a civil penalty order is issued. The person shall simultaneously send a copy of the filing by certified mail to the Administrator and the Attorney General. The Administrator shall file in the court within 30 days a certified copy, or certified index, as appropriate, of the record on which the order was issued. The court is not to set aside or remand any order issued in accordance with the requirements of this paragraph (c) unless substantial evidence does not exist in the record, taken as a whole, to support the finding of a violation or unless the Administrator's assessment of the penalty constitutes an abuse of discretion, and the court is not to impose additional civil penalties unless the Administrator's assessment of the penalty constitutes an abuse of discretion. In any proceedings, the United States may seek to recover civil penalties assessed under this section.

(6) *Collection.* (i) If any person fails to pay an assessment of a civil penalty imposed by the Administrator as provided in this part after the order making the assessment has become final or after a court in an action brought under paragraph (c)(5) of this section has entered a final judgment in favor of the Administrator, the Administrator shall request that the Attorney General bring a civil action in an appropriate district court to recover the amount assessed (plus interest at rates established pursuant to section 6621(a)(2) of the Internal Revenue Code of 1986 (26 U.S.C. 6621(a)(2)) from the date of the final order or the date of final judgment, as the case may be). In such an action, the validity, amount, and appropriateness of the penalty is not subject to review.

(ii) A person who fails to pay on a timely basis the amount of an assessment of a civil penalty as described in paragraph (c)(6)(i) of this section shall be required to pay, in addition to that amount and interest, the United States' enforcement expenses, including attorney's fees and costs for collection proceedings, and a quarterly nonpayment penalty for each quarter during which the failure to pay persists. The nonpayment penalty is an amount equal to ten percent of the aggregate amount of that person's penalties and nonpayment penalties which are unpaid as of the beginning of such quarter.

(d) The maximum penalty values listed in paragraphs (a) and (c) of this section are shown for calendar year 2004. Maximum penalty limits for later years may be adjusted based on the

Consumer Price Index. The specific regulatory provisions for changing the maximum penalties, published in 40 CFR part 19, reference the applicable U.S. Code citation on which the prohibited action is based.

[64 FR 73331, Dec. 29, 1999, as amended at 68 FR 9789, Feb. 28, 2003; 70 FR 40462, July 13, 2005]

§94.1107 Warranty provisions.

(a) The manufacturer of each engine must warrant to the ultimate purchaser and each subsequent purchaser or owner that the engine is designed, built, and equipped so as to conform at the time of sale with applicable regulations under section 213 of the Act, and is free from defects in materials and workmanship which cause such engine to fail to conform with applicable regulations for its warranty period (as determined under §94.10).

(b) For the purposes of this section, the owner of any engine warranted under this part is responsible for the proper maintenance of the engine. Proper maintenance includes replacement and/or service, as needed, at the owner's expense at a service establishment or facility of the owner's choosing, of all parts, items, or devices which were in general use with engines prior to 1999. For diesel engines, this would generally include replacement or cleaning of the fuel delivery and injection system.

§94.1108 In-use compliance provisions.

(a) Effective with respect to engines subject to the requirements of this part:

(1) If the Administrator determines that a substantial number of any class or category of engines, although properly maintained and used, do not conform to the regulations prescribed under section 213 of the Act when in actual use throughout their useful life period (as defined under §94.2), the Administrator shall immediately notify the manufacturer of such nonconformity and require the manufacturer to submit a plan for remedying the nonconformity of the engines with respect to which such notification is given.

(i) The manufacturer's plan shall provide that the nonconformity of any such engines which are properly used and maintained will be remedied at the expense of the manufacturer.

(ii) If the manufacturer disagrees with such determination of nonconformity and so advises the Administrator, the Administrator shall afford the manufacturer and other interested persons an opportunity to present their views and evidence in support thereof at a public hearing. Unless, as a result of such hearing, the Administrator withdraws such determination of nonconformity, the Administrator shall, within 60 days after the completion of such hearing, order the manufacturer to provide prompt notification of such nonconformity in accordance with paragraph (a)(2) of this section.

(2) Any notification required to be given by the manufacturer under paragraph (a)(1) of this section with respect to any class or category of engines shall be given to ultimate purchasers, subsequent purchasers (if known), and dealers (as applicable) in such manner and containing such information as required in Subparts E and H of this part.

(3)(i) The certifying manufacturer shall furnish with each new engine written instructions for the proper maintenance and use of the engine by the ultimate purchaser as required under §94.211.

(ii) The instruction under paragraph (a)(3)(i) of this section must not include any condition on the ultimate purchaser's using, in connection with such engine, any component or service (other than a component or service provided without charge under the terms of the purchase agreement) which is identified by brand, trade, or corporate name. Such instructions also must not directly or indirectly distinguish between service performed by the franchised dealers of such manufacturer, or any other service establishments with which such manufacturer has a commercial relationship, and service performed by independent engine repair facilities with which such manufacturer has no commercial relationship.

(iii) The prohibition of paragraph (a)(3)(ii) of this section may be waived by the Administrator if:

(A) The manufacturer satisfies the Administrator that the engine will

function properly only if the component or service so identified is used in connection with such engine; and

(B) The Administrator finds that such a waiver is in the public interest.

(iv) In addition, the manufacturer shall indicate by means of a label or tag permanently affixed to the engine that the engine is covered by a certificate of conformity issued for the purpose of assuring achievement of emission standards prescribed under section 213 of the Act. This label or tag shall also contain information relating to control of emissions as prescribed under § 94.212.

(b) The manufacturer bears all cost obligation any dealer incurs as a result of a requirement imposed by paragraph (a) of this section. The transfer of any such cost obligation from a manufacturer to a dealer through franchise or other agreement is prohibited.

(c) If a manufacturer includes in an advertisement a statement respecting the cost or value of emission control devices or systems, the manufacturer shall set forth in the statement the cost or value attributed to these devices or systems by the Secretary of Labor (through the Bureau of Labor Statistics). The Secretary of Labor, and his or her representatives, has the same access for this purpose to the books, documents, papers, and records of a manufacturer as the Comptroller General has to those of a recipient of assistance for purposes of section 311 of the Act.

APPENDIX I TO PART 94—EMISSION-RELATED ENGINE PARAMETERS AND SPECIFICATIONS

I. Basic Engine Parameters—Reciprocating Engines.
1. Compression ratio.
2. Type of air aspiration (natural, Roots blown, supercharged, turbocharged).
3. Valves (intake and exhaust).
a. Head diameter dimension.
b. Valve lifter or actuator type and valve lash dimension.
4. Camshaft timing.
a. Valve opening—intake exhaust (degrees from TDC or BDC).
b. Valve closing—intake exhaust (degrees from TDC or BDC).
c. Valve overlap (degrees).
5. Ports—two stroke engines (intake and/or exhaust).
a. Flow area.
b. Opening timing (degrees from TDC or BDC).
c. Closing timing (degrees from TDC or BDC).

II. Intake Air System.
1. Roots blower/supercharger/turbocharger calibration.
2. Charge air cooling.
a. Type (air-to-air; air-to-liquid).
b. Type of liquid cooling (engine coolant, dedicated cooling system).
c. Performance (charge air delivery temperature (°F) at rated power and one other power level under ambient conditions of 80°F and 110°F, and 3 minutes and 15 minutes after selecting rated power, and 3 minutes and 5 minutes after selecting other power level).
3. Temperature control system calibration.
4. Maximum allowable inlet air restriction.

III. Fuel System.
1. General.
a. Engine idle speed.
2. Fuel injection—compression ignition engines.
a. Control parameters and calibrations.
b. Transient enrichment system calibration.
c. Air-fuel flow calibration.
d. Altitude compensation system calibration.
e. Operating pressure(s).
f. Injector timing calibration.

IV. Engine Cooling System.
1. Thermostat calibration.

V. Exhaust System.
1. Maximum allowable back pressure.

VI. Exhaust Emission Control System.
1. Air injection system.
a. Control parameters and calibrations.
b. Pump flow rate.
2. EGR system.
a. Control parameters and calibrations.
b. EGR valve flow calibration.
3. Catalytic converter system.
a. Active surface area.
b. Volume of catalyst.
c. Conversion efficiency.
4. Backpressure.

VII. Crankcase Emission Control System.
1. Control parameters and calibrations.
2. Valve calibrations.

VIII. Auxiliary Emission Control Devices (AECD).
1. Control parameters and calibrations.
2. Component calibration(s).

PART 95—MANDATORY PATENT LICENSES

Sec.
95.1 Definitions.
95.2 Petition for mandatory license.
95.3 Findings prior to application to Attorney General.
95.4 Limitations on mandatory licenses.

AUTHORITY: 42 U.S.C. 7609; Sec. 104, Pub. L. 103–182, 107 Stat. 2057, 2064.

SOURCE: 59 FR 67638, Dec. 30, 1994, unless otherwise noted.

§95.1 Definitions.

(a) As used in this part, all terms not defined in this section shall have the meaning given them by the Act.

(b) *Act* means the Clean Air Act, as amended (42 U.S.C. §§7401–7671).

(c) *Agency* means the Environmental Protection Agency.

(d) *Administrator* means the Administrator of the Environmental Protection Agency.

§95.2 Petition for mandatory license.

(a) Any party required to comply with sections 111, 112 or 202 of the Act (42 U.S.C. 7411, 7412 or 7521) may petition to the Administrator for a mandatory patent license pursuant to section 308 of the Act (42 U.S.C. 7608), under a patent that the petitioner maintains is necessary to enable the petitioner to comply with Sections 111, 112 or 202 of the Act.

(b)(1) Each petition shall be signed by the petitioner and shall state the petitioner's name and address. If the petitioner is a corporation, the petition shall be signed by an authorized officer of the corporation, and the petition shall indicate the state of incorporation. Where the petitioner elects to be represented by counsel, a signed notice to that effect shall be included with the petition at the time of filing.

(2) Each petition shall include a copy of the patent under which a mandatory patent license is sought. The petition shall identify all current owners of the patent and shall include a copy of all assignment documents relevant to the patent that are available from the United States Patent and Trademark Office.

(3) Each petition must identify any person whose interest the petitioner believes may be affected by the grant of the license to which the petition is directed.

(4) Each petition must contain a concise statement of all of the essential facts upon which it is based. No particular form of statement is required. Each petition shall be verified by the petitioner or by the person having the best knowledge of such facts. In the case of facts stated on information and belief, the source of such information and grounds of belief shall be given. The statement of facts shall include the following:

(i) An identification of the provisions of the Act and/or regulations thereunder that the petitioner maintains petitioner will be able to comply with if the petitioner is granted the patent license that is the subject of the petition;

(ii) An identification of the nature and purpose of the petitioner's intended use of the patent license;

(iii) An explanation of the relationship between the patented technology and the activities to which petitioner proposes to apply the patented technology, including an estimate of the effect on such activities stemming from the grant or denial of the patent license;

(iv) A summary of facts demonstrating that the patent under which a mandatory patent license is sought is being used or is intended for public or commercial use;

(v) An explanation of why a mandatory patent license is necessary for the petitioner to comply with the requirements of sections 111, 112 or 202 of the Act, and why the patented technology is not otherwise available;

(vi) An explanation of why there are no other reasonable alternatives for accomplishing compliance with sections 111, 112 or 202 of the Act;

(vii) An explanation of why the unavailability of a mandatory patent license may result in a substantial lessening of competition or a tendency to create a monopoly in any line of commerce in any section of the United States;

(viii) A summary of efforts made by the petitioner to obtain a patent license from the owner of the patent, including the terms and conditions of any patent license proposed by petitioner to the patent owner; and

(ix) The terms, if any, on which the owner of the patent has proposed to grant the petitioner a patent license.

(5) Each petition shall include a proposed patent license that states all of the terms and conditions that the petitioner proposes for the patent license.

(6) Petitions shall be addressed to the Assistant Administrator for Air and Radiation, Mail Code 6101, U.S. Environmental Protection Agency, Washington, DC 20460.

(c) Petitions that do not include all of the information required in paragraph (b) of this section shall be returned to the petitioner. The petitioner may supplement the petition and resubmit the petition.

(d) If the Administrator, or the Administrator's designee, finds that the criteria in § 95.3 are not met, or otherwise decides to deny the petition, a denial of the petition shall be sent to the petitioner, along with an explanation of the reasons for the denial.

(e) If the Administrator, or the Administrator's designee, finds that the criteria in § 95.3 are met and decides to apply to the Attorney General for a patent license under section 308 of the Act, notice of such application shall be given to the petitioner, along with a copy of the application sent to the Attorney General.

§ 95.3 Findings prior to application to Attorney General.

The Administrator, or the Administrator's designee, may apply to the Attorney General for a mandatory patent license pursuant to section 308 of the Act (42 U.S.C. 7608) either in response to a petition under § 95.2 or on the Administrator's or designee's own initiative, only after expressly finding that each one of the following mandatory criteria is met:

(a) The application is for a patent license covering no more than one patent;

(b) The party to whom the proposed patent license is to be granted has presented the Administrator or designee with evidence that such party has made reasonable efforts to obtain a patent license from the patent owner with terms similar to the license terms to be proposed in the application to the Attorney General;

(c) The patent under which a patent license is sought in the application to the Attorney General is being used or is intended for public or commercial use;

(d) The mandatory patent license is necessary for a party to comply with the requirements of sections 111, 112 or 202 of the Act (42 U.S.C. 7411, 7412 or 7521);

(e) The patented technology is not otherwise reasonably available, and there are no other reasonable alternatives for accomplishing compliance with sections 111, 112 or 202 of the Act (42 U.S.C. 7411, 7412 or 7521); and

(f) The unavailability of a mandatory patent license may result in a substantial lessening of competition or a tendency to create a monopoly in any line of commerce in any section of the United States.

§ 95.4 Limitations on mandatory licenses

(a) If the Administrator, or the Administrator's designee, decides to apply to the Attorney General for a mandatory patent license in accordance with § 95.3, the application shall include a proposed patent license with the following limitations:

(1) The scope and duration of the patent license shall be limited to that necessary to permit the proposed licensee to comply with the requirements the Act;

(2) The patent license shall be non-exclusive;

(3) The patent license shall be non-assignable, except with that part of the enterprise or goodwill that enjoys the license;

(4) The patent license shall be for use of the licensed technology in the United States only;

(5) The patent license shall extend only to those uses necessary to enable the licensee to comply with sections 111, 112 or 202 of the Act (42 U.S.C. 7411, 7412 or 7521);

(6) The patent license shall provide for termination, subject to adequate protections of the legitimate interests of the licensed party, when the circumstances that made the compulsory patent license necessary cease to exist and are unlikely to recur; and

(7) The patent license shall provide for adequate remuneration that takes into account the economic value of the license.

(b) The Administrator, or the Administrator's designee, may decide as appropriate to include additional conditions, terms or limitations on the

scope of the patent license for which application is made to the Attorney General.

PART 96—NO_X BUDGET TRADING PROGRAM AND CAIR NO_X AND SO_2 TRADING PROGRAMS FOR STATE IMPLEMENTATION PLANS

Subpart A—NO_X Budget Trading Program General Provisions

Sec.
96.1 Purpose.
96.2 Definitions.
96.3 Measurements, abbreviations, and acronyms.
96.4 Applicability.
96.5 Retired unit exemption.
96.6 Standard requirements.
96.7 Computation of time.

Subpart B—Authorized Account Representative for NO_X Budget Sources

96.10 Authorization and responsibilities of the NO_X authorized account representative.
96.11 Alternate NO_X authorized account representative.
96.12 Changing the NO_X authorized account representative and the alternate NO_X authorized account representative; changes in the owners and operators.
96.13 Account certificate of representation.
96.14 Objections concerning the NO_X authorized account representative.

Subpart C—Permits

96.20 General NO_X Budget trading program permit requirements.
96.21 Submission of NO_X Budget permit applications.
96.22 Information requirements for NO_X Budget permit applications.
96.23 NO_X Budget permit contents.
96.24 Effective date of initial NO_X Budget permit.
96.25 NO_X Budget permit revisions.

Subpart D—Compliance Certification

96.30 Compliance certification report.
96.31 Permitting authority's and Administrator's action on compliance certifications.

Subpart E—NO_X Allowance Allocations

96.40 State trading program budget.
96.41 Timing requirements for NO_X allowance allocations.
96.42 NO_X allowance allocations.

Subpart F—NO_X Allowance Tracking System

96.50 NO_X Allowance Tracking System accounts.
96.51 Establishment of accounts.
96.52 NO_X Allowance Tracking System responsibilities of NO_X authorized account representative.
96.53 Recordation of NO_X allowance allocations.
96.54 Compliance.
96.55 Banking.
96.56 Account error.
96.57 Closing of general accounts.

Subpart G—NO_X Allowance Transfers

96.60 Submission of NO_X allowance transfers.
96.61 EPA recordation.
96.62 Notification.

Subpart H—Monitoring and Reporting

96.70 General requirements.
96.71 Initial certification and recertification procedures.
96.72 Out of control periods.
96.73 Notifications.
96.74 Recordkeeping and reporting.
96.75 Petitions.
96.76 Additional requirements to provide heat input data for allocations purposes.

Subpart I—Individual Unit Opt-ins

96.80 Applicability.
96.81 General.
96.82 NO_X authorized account representative.
96.83 Applying for NO_X Budget opt-in permit.
96.84 Opt-in process.
96.85 NO_X Budget opt-in permit contents.
96.86 Withdrawal from NO_X Budget Trading Program.
96.87 Change in regulatory status.
96.88 NO_X allowance allocations to opt-in units.

Subpart J—Mobile and Area Sources [Reserved]

Subparts K—Z [Reserved]

Subpart AA—CAIR NO_X Annual Trading Program General Provisions

96.101 Purpose.
96.102 Definitions.
96.103 Measurements, abbreviations, and acronyms.
96.104 Applicability.
96.105 Retired unit exemption.
96.106 Standard requirements.
96.107 Computation of time.
96.108 Appeal procedures.

Subpart BB—CAIR Designated Representative for CAIR NO_X Sources

96.110 Authorization and responsibilities of CAIR designated representative.
96.111 Alternate CAIR designated representative.
96.112 Changing CAIR designated representative and alternate CAIR designated representative; changes in owners and operators.
96.113 Certificate of representation.
96.114 Objections concerning CAIR designated representative.
96.115 Delegation by CAIR designated representative and alternate CAIR designated representative.

Subpart CC—Permits

96.120 General CAIR NO_X Annual Trading Program permit requirements.
96.121 Submission of CAIR permit applications.
96.122 Information requirements for CAIR permit applications.
96.123 CAIR permit contents and term.
96.124 CAIR permit revisions.

Subpart DD [Reserved]

Subpart EE—CAIR NO_X Allowance Allocations

96.140 State trading budgets.
96.141 Timing requirements for CAIR NO_X allowance allocations.
96.142 CAIR NO_X allowance allocations.
96.143 Compliance supplement pool.

Subpart FF—CAIR NO_X Allowance Tracking System

96.150 [Reserved]
96.151 Establishment of accounts.
96.152 Responsibilities of CAIR authorized account representative.
96.153 Recordation of CAIR NO_X allowance allocations.
96.154 Compliance with CAIR NO_X emissions limitation.
96.155 Banking.
96.156 Account error.
96.157 Closing of general accounts.

Subpart GG—CAIR NO_X Allowance Transfers

96.160 Submission of CAIR NO_X allowance transfers.
96.161 EPA recordation.
96.162 Notification.

Subpart HH—Monitoring and Reporting

96.170 General requirements.
96.171 Initial certification and recertification procedures.
96.172 Out of control periods.
96.173 Notifications.
96.174 Recordkeeping and reporting.
96.175 Petitions.

Subpart II—CAIR NO_X Opt-in Units

96.180 Applicability.
96.181 General.
96.182 CAIR designated representative.
96.183 Applying for CAIR opt-in permit.
96.184 Opt-in process.
96.185 CAIR opt-in permit contents.
96.186 Withdrawal from CAIR NO_X Annual Trading Program.
96.187 Change in regulatory status.
96.188 CAIR NO_X allowance allocations to CAIR NO_X opt-in units.

Subparts JJ—ZZ [Reserved]

Subpart AAA—CAIR SO_2 Trading Program General Provisions

96.201 Purpose.
96.202 Definitions.
96.203 Measurements, abbreviations, and acronyms.
96.204 Applicability.
96.205 Retired unit exemption.
96.206 Standard requirements.
96.207 Computation of time.
96.208 Appeal procedures.

Subpart BBB—CAIR Designated Representative for CAIR SO_2 Sources

96.210 Authorization and responsibilities of CAIR designated representative.
96.211 Alternate CAIR designated representative.
96.212 Changing CAIR designated representative and alternate CAIR designated representative; changes in owners and operators.
96.213 Certificate of representation.
96.214 Objections concerning CAIR designated representative.
96.215 Delegation by CAIR designated representative and alternate CAIR designated representative.

Subpart CCC—Permits

96.220 General CAIR SO_2 Trading Program permit requirements.
96.221 Submission of CAIR permit applications.
96.222 Information requirements for CAIR permit applications.
96.223 CAIR permit contents and term.
96.224 CAIR permit revisions.

Subparts DDD–EEE [Reserved]

Subpart FFF—CAIR SO_2 Allowance Tracking System

96.250 [Reserved]
96.251 Establishment of accounts.
96.252 Responsibilities of CAIR authorized account representative.
96.253 Recordation of CAIR SO_2 allowances.
96.254 Compliance with CAIR SO_2 emissions limitation.
96.255 Banking.
96.256 Account error.
96.257 Closing of general accounts.

Subpart GGG—CAIR SO_2 Allowance Transfers

96.260 Submission of CAIR SO_2 allowance transfers.
96.261 EPA recordation.
96.262 Notification.

Subpart HHH—Monitoring and Reporting

96.270 General requirements.
96.271 Initial certification and recertification procedures.
96.272 Out of control periods.
96.273 Notifications.
96.274 Recordkeeping and reporting.
96.275 Petitions.

Subpart III—CAIR SO_2 Opt-in Units

96.280 Applicability.
96.281 General.
96.282 CAIR designated representative.
96.283 Applying for CAIR opt-in permit.
96.284 Opt-in process.
96.285 CAIR opt-in permit contents.
96.286 Withdrawal from CAIR SO_2 Trading Program.
96.287 Change in regulatory status.
96.288 CAIR SO_2 allowance allocations to CAIR SO_2 opt-in units.

Subparts JJJ–ZZZ [Reserved]

Subpart AAAA—CAIR NO_XOzone Season Trading Program General Provisions

96.301 Purpose.
96.302 Definitions.
96.303 Measurements, abbreviations, and acronyms.
96.304 Applicability.
96.305 Retired unit exemption.
96.306 Standard requirements.
96.307 Computation of time.
96.308 Appeal procedures.

Subpart BBBB—CAIR Designated Representative for CAIR NO_X Ozone Season Sources

96.310 Authorization and responsibilities of CAIR designated representative.
96.311 Alternate CAIR designated representative.
96.312 Changing CAIR designated representative and alternate CAIR designated representative; changes in owners and operators.
96.313 Certificate of representation.
96.314 Objections concerning CAIR designated representative.
96.315 Delegation by CAIR designated representative and alternate CAIR designated representative.

Subpart CCCC—Permits

96.320 General CAIR NO_X Ozone Season Trading Program permit requirements.
96.321 Submission of CAIR permit applications.
96.322 Information requirements for CAIR permit applications.
96.323 CAIR permit contents and term.
96.324 CAIR permit revisions.

Subpart DDDD [Reserved]

Subpart EEEE—CAIR NO_X Ozone Season Allowance Allocations

96.340 State trading budgets.
96.341 Timing requirements for CAIR NO_X Ozone Season allowance allocations.
96.342 CAIR NO_X Ozone Season allowance allocations.

Subpart FFFF—CAIR NO_X Ozone Season Allowance Tracking System

96.350 [Reserved]
96.351 Establishment of accounts.
96.352 Responsibilities of CAIR authorized account representative.
96.353 Recordation of CAIR NO_X Ozone Season allowance allocations.
96.354 Compliance with CAIR NO_X emissions limitation.
96.355 Banking.
96.356 Account error.
96.357 Closing of general accounts.

Subpart GGGG—CAIR NO_X Ozone Season Allowance Transfers

96.360 Submission of CAIR NO_X Ozone Season allowance transfers.
96.361 EPA recordation.
96.362 Notification.

Subpart HHHH—Monitoring and Reporting

96.370 General requirements.
96.371 Initial certification and recertification procedures.
96.372 Out of control periods.
96.373 Notifications.
96.374 Recordkeeping and reporting.
96.375 Petitions.

Subpart IIII—CAIR NO_X Ozone Season Opt-in Units

96.380 Applicability.
96.381 General.
96.382 CAIR designated representative.
96.383 Applying for CAIR opt-in permit.
96.384 Opt-in process.
96.385 CAIR opt-in permit contents.
96.386 Withdrawal from CAIR NO_X Ozone Season Trading Program.
96.387 Change in regulatory status.
96.388 CAIR NO_X Ozone Season allowance allocations to CAIR NO_X Ozone Season opt-in units.

AUTHORITY: 42 U.S.C. 7401, 7403, 7410, 7601, and 7651, *et seq*.

SOURCE: 63 FR 57514, Oct. 27, 1998, unless otherwise noted.

Subpart A—NO_X Budget Trading Program General Provisions

§ 96.1 Purpose.

This part establishes general provisions and the applicability, permitting, allowance, excess emissions, monitoring, and opt-in provisions for the NO_X Budget Trading Program for State implementation plans as a means of mitigating the interstate transport of ozone and nitrogen oxides, an ozone precursor. The owner or operator of a unit, or any other person, shall comply with requirements of this part as a matter of federal law only to the extent a State that has jurisdiction over the unit incorporates by reference provisions of this part, or otherwise adopts such requirements of this part, and requires compliance, the State submits to the Administrator a State implementation plan including such adoption and such compliance requirement, and the Administrator approves the portion of the State implementation plan including such adoption and such compliance requirement. To the extent a State adopts requirements of this part, including at a minimum the requirements of subpart A (except for § 96.4(b)), subparts B through D, subpart F (except for § 96.55(c)), and subparts G and H of this part, the State authorizes the Administrator to assist the State in implementing the NO_X Budget Trading Program by carrying out the functions set forth for the Administrator in such requirements.

§ 96.2 Definitions.

The terms used in this part shall have the meanings set forth in this section as follows:

Account certificate of representation means the completed and signed submission required by subpart B of this part for certifying the designation of a NO_X authorized account representative for a NO_X Budget source or a group of identified NO_X Budget sources who is authorized to represent the owners and operators of such source or sources and of the NO_X Budget units at such source or sources with regard to matters under the NO_X Budget Trading Program.

Account number means the identification number given by the Administrator to each NO_X Allowance Tracking System account.

Acid Rain emissions limitation means, as defined in § 72.2 of this chapter, a limitation on emissions of sulfur dioxide or nitrogen oxides under the Acid Rain Program under title IV of the CAA.

Administrator means the Administrator of the United States Environmental Protection Agency or the Administrator's duly authorized representative.

Allocate or *allocation* means the determination by the permitting authority or the Administrator of the number of NO_X allowances to be initially credited to a NO_X Budget unit or an allocation set-aside.

Automated data acquisition and handling system or *DAHS* means that component of the CEMS, or other emissions monitoring system approved for use under subpart H of this part, designed to interpret and convert individual output signals from pollutant concentration monitors, flow monitors, diluent gas monitors, and other component parts of the monitoring system to produce a continuous record of the measured parameters in the measurement units required by subpart H of this part.

Boiler means an enclosed fossil or other fuel-fired combustion device used to produce heat and to transfer heat to recirculating water, steam, or other medium.

CAA means the CAA, 42 U.S.C. 7401, *et seq.*, as amended by Pub. L. No. 101–549 (November 15, 1990).

Combined cycle system means a system comprised of one or more combustion turbines, heat recovery steam generators, and steam turbines configured to improve overall efficiency of electricity generation or steam production.

Combustion turbine means an enclosed fossil or other fuel-fired device that is comprised of a compressor, a combustor, and a turbine, and in which the flue gas resulting from the combustion of fuel in the combustor passes through the turbine, rotating the turbine.

Commence commercial operation means, with regard to a unit that serves a generator, to have begun to produce steam, gas, or other heated medium used to generate electricity for sale or use, including test generation. Except as provided in §96.5, for a unit that is a NO_X Budget unit under §96.4 on the date the unit commences commercial operation, such date shall remain the unit's date of commencement of commercial operation even if the unit is subsequently modified, reconstructed, or repowered. Except as provided in §96.5 or subpart I of this part, for a unit that is not a NO_X Budget unit under §96.4 on the date the unit commences commercial operation, the date the unit becomes a NO_X Budget unit under §96.4 shall be the unit's date of commencement of commercial operation.

Commence operation means to have begun any mechanical, chemical, or electronic process, including, with regard to a unit, start-up of a unit's combustion chamber. Except as provided in §96.5, for a unit that is a NO_X Budget unit under §96.4 on the date of commencement of operation, such date shall remain the unit's date of commencement of operation even if the unit is subsequently modified, reconstructed, or repowered. Except as provided in §96.5 or subpart I of this part, for a unit that is not a NO_X Budget unit under §96.4 on the date of commencement of operation, the date the unit becomes a NO_X Budget unit under §96.4 shall be the unit's date of commencement of operation.

Common stack means a single flue through which emissions from two or more units are exhausted.

Compliance account means a NO_X Allowance Tracking System account, established by the Administrator for a NO_X Budget unit under subpart F of this part, in which the NO_X allowance allocations for the unit are initially recorded and in which are held NO_X allowances available for use by the unit for a control period for the purpose of meeting the unit's NO_X Budget emissions limitation.

Compliance certification means a submission to the permitting authority or the Administrator, as appropriate, that is required under subpart D of this part to report a NO_X Budget source's or a NO_X Budget unit's compliance or noncompliance with this part and that is signed by the NO_X authorized account representative in accordance with subpart B of this part.

Continuous emission monitoring system or *CEMS* means the equipment required under subpart H of this part to sample, analyze, measure, and provide, by readings taken at least once every 15 minutes of the measured parameters, a permanent record of nitrogen oxides emissions, expressed in tons per hour for nitrogen oxides. The following systems are component parts included, consistent with part 75 of this chapter, in a continuous emission monitoring system:

(1) Flow monitor;

(2) Nitrogen oxides pollutant concentration monitors;

(3) Diluent gas monitor (oxygen or carbon dioxide) when such monitoring is required by subpart H of this part;

(4) A continuous moisture monitor when such monitoring is required by subpart H of this part; and

(5) An automated data acquisition and handling system.

Control period means the period beginning May 1 of a year and ending on September 30 of the same year, inclusive.

Emissions means air pollutants exhausted from a unit or source into the atmosphere, as measured, recorded, and reported to the Administrator by the NO_X authorized account representative and as determined by the Administrator in accordance with subpart H of this part.

Energy Information Administration means the Energy Information Administration of the United States Department of Energy.

Excess emissions means any tonnage of nitrogen oxides emitted by a NO_X Budget unit during a control period that exceeds the NO_X Budget emissions limitation for the unit.

Fossil fuel means natural gas, petroleum, coal, or any form of solid, liquid, or gaseous fuel derived from such material.

Fossil fuel-fired means, with regard to a unit:

(1) The combustion of fossil fuel, alone or in combination with any other fuel, where fossil fuel actually combusted comprises more than 50 percent of the annual heat input on a Btu basis during any year starting in 1995 or, if a unit had no heat input starting in 1995, during the last year of operation of the unit prior to 1995; or

(2) The combustion of fossil fuel, alone or in combination with any other fuel, where fossil fuel is projected to comprise more than 50 percent of the annual heat input on a Btu basis during any year; provided that the unit shall be ''fossil fuel-fired'' as of the date, during such year, on which the unit begins combusting fossil fuel.

General account means a NO_X Allowance Tracking System account, established under subpart F of this part, that is not a compliance account or an overdraft account.

Generator means a device that produces electricity.

Heat input means the product (in mmBtu/time) of the gross calorific value of the fuel (in Btu/lb) and the fuel feed rate into a combustion device (in mass of fuel/time), as measured, recorded, and reported to the Administrator by the NO_X authorized account representative and as determined by the Administrator in accordance with subpart H of this part, and does not include the heat derived from preheated combustion air, recirculated flue gases, or exhaust from other sources.

Life-of-the-unit, firm power contractual arrangement means a unit participation power sales agreement under which a utility or industrial customer reserves, or is entitled to receive, a specified amount or percentage of nameplate capacity and associated energy from any specified unit and pays its proportional amount of such unit's total costs, pursuant to a contract:

(1) For the life of the unit;

(2) For a cumulative term of no less than 30 years, including contracts that permit an election for early termination; or

(3) For a period equal to or greater than 25 years or 70 percent of the economic useful life of the unit determined as of the time the unit is built, with option rights to purchase or release some portion of the nameplate capacity and associated energy generated by the unit at the end of the period.

Maximum design heat input means the ability of a unit to combust a stated maximum amount of fuel per hour on a steady state basis, as determined by the physical design and physical characteristics of the unit.

Maximum potential hourly heat input means an hourly heat input used for reporting purposes when a unit lacks certified monitors to report heat input. If the unit intends to use appendix D of part 75 of this chapter to report heat input, this value should be calculated, in accordance with part 75 of this chapter, using the maximum fuel flow rate and the maximum gross calorific value. If the unit intends to use a flow monitor and a diluent gas monitor, this value should be reported, in accordance with part 75 of this chapter, using the maximum potential flowrate and either the maximum carbon dioxide concentration (in percent CO_2) or the minimum oxygen concentration (in percent O_2).

Maximum potential NO_X emission rate means the emission rate of nitrogen oxides (in lb/mmBtu) calculated in accordance with section 3 of appendix F of part 75 of this chapter, using the maximum potential nitrogen oxides concentration as defined in section 2 of appendix A of part 75 of this chapter, and either the maximum oxygen concentration (in percent O_2) or the minimum carbon dioxide concentration (in percent CO_2), under all operating conditions of the unit except for unit start up, shutdown, and upsets.

Maximum rated hourly heat input means a unit-specific maximum hourly

heat input (mmBtu) which is the higher of the manufacturer's maximum rated hourly heat input or the highest observed hourly heat input.

Monitoring system means any monitoring system that meets the requirements of subpart H of this part, including a continuous emissions monitoring system, an excepted monitoring system, or an alternative monitoring system.

Most stringent State or Federal NO_X emissions limitation means, with regard to a NO_X Budget opt-in source, the lowest NO_X emissions limitation (in terms of lb/mmBtu) that is applicable to the unit under State or Federal law, regardless of the averaging period to which the emissions limitation applies.

Nameplate capacity means the maximum electrical generating output (in MWe) that a generator can sustain over a specified period of time when not restricted by seasonal or other deratings as measured in accordance with the United States Department of Energy standards.

Non-title V permit means a federally enforceable permit administered by the permitting authority pursuant to the CAA and regulatory authority under the CAA, other than title V of the CAA and part 70 or 71 of this chapter.

NO_X allowance means an authorization by the permitting authority or the Administrator under the NO_X Budget Trading Program to emit up to one ton of nitrogen oxides during the control period of the specified year or of any year thereafter.

NO_X allowance deduction or *deduct NO_X allowances* means the permanent withdrawal of NO_X allowances by the Administrator from a NO_X Allowance Tracking System compliance account or overdraft account to account for the number of tons of NO_X emissions from a NO_X Budget unit for a control period, determined in accordance with subpart H of this part, or for any other allowance surrender obligation under this part.

NO_X allowances held or *hold NO_X allowances* means the NO_X allowances recorded by the Administrator, or submitted to the Administrator for recordation, in accordance with subparts F and G of this part, in a NO_X Allowance Tracking System account.

NO_X Allowance Tracking System means the system by which the Administrator records allocations, deductions, and transfers of NO_X allowances under the NO_X Budget Trading Program.

NO_X Allowance Tracking System account means an account in the NO_X Allowance Tracking System established by the Administrator for purposes of recording the allocation, holding, transferring, or deducting of NO_X allowances.

NO_X allowance transfer deadline means midnight of November 30 or, if November 30 is not a business day, midnight of the first business day thereafter and is the deadline by which NO_X allowances may be submitted for recordation in a NO_X Budget unit's compliance account, or the overdraft account of the source where the unit is located, in order to meet the unit's NO_X Budget emissions limitation for the control period immediately preceding such deadline.

NO_X authorized account representative means, for a NO_X Budget source or NO_X Budget unit at the source, the natural person who is authorized by the owners and operators of the source and all NO_X Budget units at the source, in accordance with subpart B of this part, to represent and legally bind each owner and operator in matters pertaining to the NO_X Budget Trading Program or, for a general account, the natural person who is authorized, in accordance with subpart F of this part, to transfer or otherwise dispose of NO_X allowances held in the general account.

NO_X Budget emissions limitation means, for a NO_X Budget unit, the tonnage equivalent of the NO_X allowances available for compliance deduction for the unit and for a control period under §96.54(a) and (b), adjusted by any deductions of such NO_X allowances to account for actual utilization under §96.42(e) for the control period or to account for excess emissions for a prior control period under §96.54(d) or to account for withdrawal from the NO_X Budget Program, or for a change in regulatory status, for a NO_X Budget opt-in source under §96.86 or §96.87.

NO_X Budget opt-in permit means a NO_X Budget permit covering a NO_X Budget opt-in source.

NO_X Budget opt-in source means a unit that has been elected to become a NO_X Budget unit under the NO_X Budget Trading Program and whose NO_X Budget opt-in permit has been issued and is in effect under subpart I of this part.

NO_X Budget permit means the legally binding and federally enforceable written document, or portion of such document, issued by the permitting authority under this part, including any permit revisions, specifying the NO_X Budget Trading Program requirements applicable to a NO_X Budget source, to each NO_X Budget unit at the NO_X Budget source, and to the owners and operators and the NO_X authorized account representative of the NO_X Budget source and each NO_X Budget unit.

NO_X Budget source means a source that includes one or more NO_X Budget units.

NO_X Budget Trading Program means a multi-state nitrogen oxides air pollution control and emission reduction program established in accordance with this part and pursuant to § 51.121 of this chapter, as a means of mitigating the interstate transport of ozone and nitrogen oxides, an ozone precursor.

NO_X Budget unit means a unit that is subject to the NO_X Budget Trading Program emissions limitation under § 96.4 or § 96.80.

Operating means, with regard to a unit under §§ 96.22(d)(2) and 96.80, having documented heat input for more than 876 hours in the 6 months immediately preceding the submission of an application for an initial NO_X Budget permit under § 96.83(a).

Operator means any person who operates, controls, or supervises a NO_X Budget unit, a NO_X Budget source, or unit for which an application for a NO_X Budget opt-in permit under § 96.83 is submitted and not denied or withdrawn and shall include, but not be limited to, any holding company, utility system, or plant manager of such a unit or source.

Opt-in means to be elected to become a NO_X Budget unit under the NO_X Budget Trading Program through a final, effective NO_X Budget opt-in permit under subpart I of this part.

Overdraft account means the NO_X Allowance Tracking System account, established by the Administrator under subpart F of this part, for each NO_X Budget source where there are two or more NO_X Budget units.

Owner means any of the following persons:

(1) Any holder of any portion of the legal or equitable title in a NO_X Budget unit or in a unit for which an application for a NO_X Budget opt-in permit under § 96.83 is submitted and not denied or withdrawn; or

(2) Any holder of a leasehold interest in a NO_X Budget unit or in a unit for which an application for a NO_X Budget opt-in permit under § 96.83 is submitted and not denied or withdrawn; or

(3) Any purchaser of power from a NO_X Budget unit or from a unit for which an application for a NO_X Budget opt-in permit under § 96.83 is submitted and not denied or withdrawn under a life-of-the-unit, firm power contractual arrangement. However, unless expressly provided for in a leasehold agreement, owner shall not include a passive lessor, or a person who has an equitable interest through such lessor, whose rental payments are not based, either directly or indirectly, upon the revenues or income from the NO_X Budget unit or the unit for which an application for a NO_X Budget opt-in permit under § 96.83 is submitted and not denied or withdrawn; or

(4) With respect to any general account, any person who has an ownership interest with respect to the NO_X allowances held in the general account and who is subject to the binding agreement for the NO_X authorized account representative to represent that person's ownership interest with respect to NO_X allowances.

Permitting authority means the State air pollution control agency, local agency, other State agency, or other agency authorized by the Administrator to issue or revise permits to meet the requirements of the NO_X Budget Trading Program in accordance with subpart C of this part.

Receive or receipt of means, when referring to the permitting authority or the Administrator, to come into possession of a document, information, or correspondence (whether sent in writing or by authorized electronic transmission), as indicated in an official

correspondence log, or by a notation made on the document, information, or correspondence, by the permitting authority or the Administrator in the regular course of business.

Recordation, record, or recorded means, with regard to NO_X allowances, the movement of NO_X allowances by the Administrator from one NO_X Allowance Tracking System account to another, for purposes of allocation, transfer, or deduction.

Reference method means any direct test method of sampling and analyzing for an air pollutant as specified in appendix A of part 60 of this chapter.

Serial number means, when referring to NO_X allowances, the unique identification number assigned to each NO_X allowance by the Administrator, under §96.53(c).

Source means any governmental, institutional, commercial, or industrial structure, installation, plant, building, or facility that emits or has the potential to emit any regulated air pollutant under the CAA. For purposes of section 502(c) of the CAA, a ''source,'' including a ''source'' with multiple units, shall be considered a single ''facility.''

State means one of the 48 contiguous States and the District of Columbia specified in §51.121 of this chapter, or any non-federal authority in or including such States or the District of Columbia (including local agencies, and Statewide agencies) or any eligible Indian tribe in an area of such State or the District of Columbia, that adopts a NO_X Budget Trading Program pursuant to §51.121 of this chapter. To the extent a State incorporates by reference the provisions of this part, the term ''State'' shall mean the incorporating State. The term ''State'' shall have its conventional meaning where such meaning is clear from the context.

State trading program budget means the total number of NO_X tons apportioned to all NO_X Budget units in a given State, in accordance with the NO_X Budget Trading Program, for use in a given control period.

Submit or serve means to send or transmit a document, information, or correspondence to the person specified in accordance with the applicable regulation:

(1) In person;

(2) By United States Postal Service; or

(3) By other means of dispatch or transmission and delivery. Compliance with any ''submission,'' ''service,'' or ''mailing'' deadline shall be determined by the date of dispatch, transmission, or mailing and not the date of receipt.

Title V operating permit means a permit issued under title V of the CAA and part 70 or part 71 of this chapter.

Title V operating permit regulations means the regulations that the Administrator has approved or issued as meeting the requirements of title V of the CAA and part 70 or 71 of this chapter.

Ton or tonnage means any ''short ton'' (i.e., 2,000 pounds). For the purpose of determining compliance with the NO_X Budget emissions limitation, total tons for a control period shall be calculated as the sum of all recorded hourly emissions (or the tonnage equivalent of the recorded hourly emissions rates) in accordance with subpart H of this part, with any remaining fraction of a ton equal to or greater than 0.50 ton deemed to equal one ton and any fraction of a ton less than 0.50 ton deemed to equal zero tons.

Unit means a fossil fuel-fired stationary boiler, combustion turbine, or combined cycle system.

Unit load means the total (i.e., gross) output of a unit in any control period (or other specified time period) produced by combusting a given heat input of fuel, expressed in terms of:

(1) The total electrical generation (MWe) produced by the unit, including generation for use within the plant; or

(2) In the case of a unit that uses heat input for purposes other than electrical generation, the total steam pressure (psia) produced by the unit, including steam for use by the unit.

Unit operating day means a calendar day in which a unit combusts any fuel.

Unit operating hour or *hour of unit operation* means any hour (or fraction of an hour) during which a unit combusts any fuel.

Utilization means the heat input (expressed in mmBtu/time) for a unit. The unit's total heat input for the control period in each year will be determined

in accordance with part 75 of this chapter if the NO_X Budget unit was otherwise subject to the requirements of part 75 of this chapter for the year, or will be based on the best available data reported to the Administrator for the unit if the unit was not otherwise subject to the requirements of part 75 of this chapter for the year.

§ 96.3 Measurements, abbreviations, and acronyms.

Measurements, abbreviations, and acronyms used in this part are defined as follows:

Btu—British thermal unit.
hr—hour.
Kwh—kilowatt hour.
lb—pounds.
mmBtu—million Btu.
MWe—megawatt electrical.
ton—2000 pounds.
CO_2—carbon dioxide.
NO_X—nitrogen oxides.
O_2—oxygen.

§ 96.4 Applicability.

(a) The following units in a State shall be NO_X Budget units, and any source that includes one or more such units shall be a NO_X Budget source, subject to the requirements of this part:

(1) Any unit that, any time on or after January 1, 1995, serves a generator with a nameplate capacity greater than 25 MWe and sells any amount of electricity; or

(2) Any unit that is not a unit under paragraph (a) of this section and that has a maximum design heat input greater than 250 mmBtu/hr.

(b) Notwithstanding paragraph (a) of this section, a unit under paragraph (a) of this section shall be subject only to the requirements of this paragraph (b) if the unit has a federally enforceable permit that meets the requirements of paragraph (b)(1) of this section and restricts the unit to burning only natural gas or fuel oil during a control period in 2003 or later and each control period thereafter and restricts the unit's operating hours during each such control period to the number of hours (determined in accordance with paragraph (b)(1)(ii) and (iii) of this section) that limits the unit's potential NO_X mass emissions for the control period to 25 tons or less. Notwithstanding paragraph (a) of this section, starting with the effective date of such federally enforceable permit, the unit shall not be a NO_X Budget unit.

(1) For each control period under paragraph (b) of this section, the federally enforceable permit must:

(i) Restrict the unit to burning only natural gas or fuel oil.

(ii) Restrict the unit's operating hours to the number calculated by dividing 25 tons of potential NO_X mass emissions by the unit's maximum potential hourly NO_X mass emissions.

(iii) Require that the unit's potential NO_X mass emissions shall be calculated as follows:

(A) Select the default NO_X emission rate in Table 2 of § 75.19 of this chapter that would otherwise be applicable assuming that the unit burns only the type of fuel (i.e., only natural gas or only fuel oil) that has the highest default NO_X emission factor of any type of fuel that the unit is allowed to burn under the fuel use restriction in paragraph (b)(1)(i) of this section; and

(B) Multiply the default NO_X emission rate under paragraph (b)(1)(iii)(A) of this section by the unit's maximum rated hourly heat input. The owner or operator of the unit may petition the permitting authority to use a lower value for the unit's maximum rated hourly heat input than the value as defined under § 96.2. The permitting authority may approve such lower value if the owner or operator demonstrates that the maximum hourly heat input specified by the manufacturer or the highest observed hourly heat input, or both, are not representative, and that such lower value is representative, of the unit's current capabilities because modifications have been made to the unit, limiting its capacity permanently.

(iv) Require that the owner or operator of the unit shall retain at the source that includes the unit, for 5 years, records demonstrating that the operating hours restriction, the fuel use restriction, and the other requirements of the permit related to these restrictions were met.

(v) Require that the owner or operator of the unit shall report the unit's hours of operation (treating any partial hour of operation as a whole hour

of operation) during each control period to the permitting authority by November 1 of each year for which the unit is subject to the federally enforceable permit.

(2) The permitting authority that issues the federally enforceable permit with the fuel use restriction under paragraph (b)(1)(i) and the operating hours restriction under paragraphs (b)(1)(ii) and (iii) of this section will notify the Administrator in writing of each unit under paragraph (a) of this section whose federally enforceable permit issued by the permitting authority includes such restrictions. The permitting authority will also notify the Administrator in writing of each unit under paragraph (a) of this section whose federally enforceable permit issued by the permitting authority is revised to remove any such restriction, whose federally enforceable permit issued by the permitting authority includes any such restriction that is no longer applicable, or which does not comply with any such restriction.

(3) If, for any control period under paragraph (b) of this section, the fuel use restriction under paragraph (b)(1)(i) of this section or the operating hours restriction under paragraphs (b)(1)(ii) and (iii) of this section is removed from the unit's federally enforceable permit or otherwise becomes no longer applicable or if, for any such control period, the unit does not comply with the fuel use restriction under paragraph (b)(1)(i) of this section or the operating hours restriction under paragraphs (b)(1)(ii) and (iii) of this section, the unit shall be a NO_X Budget unit, subject to the requirements of this part. Such unit shall be treated as commencing operation and, for a unit under paragraph (a)(1) of this section, commencing commercial operation on September 30 of the control period for which the fuel use restriction or the operating hours restriction is no longer applicable or during which the unit does not comply with the fuel use restriction or the operating hours restriction.

§96.5 Retired unit exemption.

(a) This section applies to any NO_X Budget unit, other than a NO_X Budget opt-in source, that is permanently retired.

(b)(1) Any NO_X Budget unit, other than a NO_X Budget opt-in source, that is permanently retired shall be exempt from the NO_X Budget Trading Program, except for the provisions of this section, §§96.2, 96.3, 96.4, 96.7 and subparts E, F, and G of this part.

(2) The exemption under paragraph (b)(1) of this section shall become effective the day on which the unit is permanently retired. Within 30 days of permanent retirement, the NO_X authorized account representative (authorized in accordance with subpart B of this part) shall submit a statement to the permitting authority otherwise responsible for administering any NO_X Budget permit for the unit. A copy of the statement shall be submitted to the Administrator. The statement shall state (in a format prescribed by the permitting authority) that the unit is permanently retired and will comply with the requirements of paragraph (c) of this section.

(3) After receipt of the notice under paragraph (b)(2) of this section, the permitting authority will amend any permit covering the source at which the unit is located to add the provisions and requirements of the exemption under paragraphs (b)(1) and (c) of this section.

(c) *Special provisions.* (1) A unit exempt under this section shall not emit any nitrogen oxides, starting on the date that the exemption takes effect. The owners and operators of the unit will be allocated allowances in accordance with subpart E of this part.

(2)(i) A unit exempt under this section and located at a source that is required, or but for this exemption would be required, to have a title V operating permit shall not resume operation unless the NO_X authorized account representative of the source submits a complete NO_X Budget permit application under §96.22 for the unit not less than 18 months (or such lesser time provided under the permitting authority's title V operating permits regulations for final action on a permit application) prior to the later of May 1, 2003 or the date on which the unit is to first resume operation.

(ii) A unit exempt under this section and located at a source that is required, or but for this exemption would

be required, to have a non-title V permit shall not resume operation unless the NO_X authorized account representative of the source submits a complete NO_X Budget permit application under § 96.22 for the unit not less than 18 months (or such lesser time provided under the permitting authority's non-title V permits regulations for final action on a permit application) prior to the later of May 1, 2003 or the date on which the unit is to first resume operation.

(3) The owners and operators and, to the extent applicable, the NO_X authorized account representative of a unit exempt under this section shall comply with the requirements of the NO_X Budget Trading Program concerning all periods for which the exemption is not in effect, even if such requirements arise, or must be complied with, after the exemption takes effect.

(4) A unit that is exempt under this section is not eligible to be a NO_X Budget opt-in source under subpart I of this part.

(5) For a period of 5 years from the date the records are created, the owners and operators of a unit exempt under this section shall retain at the source that includes the unit, records demonstrating that the unit is permanently retired. The 5-year period for keeping records may be extended for cause, at any time prior to the end of the period, in writing by the permitting authority or the Administrator. The owners and operators bear the burden of proof that the unit is permanently retired.

(6) *Loss of exemption.* (i) On the earlier of the following dates, a unit exempt under paragraph (b) of this section shall lose its exemption:

(A) The date on which the NO_X authorized account representative submits a NO_X Budget permit application under paragraph (c)(2) of this section; or

(B) The date on which the NO_X authorized account representative is required under paragraph (c)(2) of this section to submit a NO_X Budget permit application.

(ii) For the purpose of applying monitoring requirements under subpart H of this part, a unit that loses its exemption under this section shall be treated as a unit that commences operation or commercial operation on the first date on which the unit resumes operation.

§ 96.6 Standard requirements.

(a) *Permit Requirements.* (1) The NO_X authorized account representative of each NO_X Budget source required to have a federally enforceable permit and each NO_X Budget unit required to have a federally enforceable permit at the source shall:

(i) Submit to the permitting authority a complete NO_X Budget permit application under § 96.22 in accordance with the deadlines specified in § 96.21(b) and (c);

(ii) Submit in a timely manner any supplemental information that the permitting authority determines is necessary in order to review a NO_X Budget permit application and issue or deny a NO_X Budget permit.

(2) The owners and operators of each NO_X Budget source required to have a federally enforceable permit and each NO_X Budget unit required to have a federally enforceable permit at the source shall have a NO_X Budget permit issued by the permitting authority and operate the unit in compliance with such NO_X Budget permit.

(3) The owners and operators of a NO_X Budget source that is not otherwise required to have a federally enforceable permit are not required to submit a NO_X Budget permit application, and to have a NO_X Budget permit, under subpart C of this part for such NO_X Budget source.

(b) *Monitoring requirements.* (1) The owners and operators and, to the extent applicable, the NO_X authorized account representative of each NO_X Budget source and each NO_X Budget unit at the source shall comply with the monitoring requirements of subpart H of this part.

(2) The emissions measurements recorded and reported in accordance with subpart H of this part shall be used to determine compliance by the unit with the NO_X Budget emissions limitation under paragraph (c) of this section.

(c) *Nitrogen oxides requirements.* (1) The owners and operators of each NO_X Budget source and each NO_X Budget

unit at the source shall hold NO_X allowances available for compliance deductions under §96.54, as of the NO_X allowance transfer deadline, in the unit's compliance account and the source's overdraft account in an amount not less than the total NO_X emissions for the control period from the unit, as determined in accordance with subpart H of this part, plus any amount necessary to account for actual utilization under §96.42(e) for the control period.

(2) Each ton of nitrogen oxides emitted in excess of the NO_X Budget emissions limitation shall constitute a separate violation of this part, the CAA, and applicable State law.

(3) A NO_X Budget unit shall be subject to the requirements under paragraph (c)(1) of this section starting on the later of May 1, 2003 or the date on which the unit commences operation.

(4) NO_X allowances shall be held in, deducted from, or transferred among NO_X Allowance Tracking System accounts in accordance with subparts E, F, G, and I of this part.

(5) A NO_X allowance shall not be deducted, in order to comply with the requirements under paragraph (c)(1) of this section, for a control period in a year prior to the year for which the NO_X allowance was allocated.

(6) A NO_X allowance allocated by the permitting authority or the Administrator under the NO_X Budget Trading Program is a limited authorization to emit one ton of nitrogen oxides in accordance with the NO_X Budget Trading Program. No provision of the NO_X Budget Trading Program, the NO_X Budget permit application, the NO_X Budget permit, or an exemption under §96.5 and no provision of law shall be construed to limit the authority of the United States or the State to terminate or limit such authorization.

(7) A NO_X allowance allocated by the permitting authority or the Administrator under the NO_X Budget Trading Program does not constitute a property right.

(8) Upon recordation by the Administrator under subpart F, G, or I of this part, every allocation, transfer, or deduction of a NO_X allowance to or from a NO_X Budget unit's compliance account or the overdraft account of the source where the unit is located is deemed to amend automatically, and become a part of, any NO_X Budget permit of the NO_X Budget unit by operation of law without any further review.

(d) *Excess emissions requirements.* (1) The owners and operators of a NO_X Budget unit that has excess emissions in any control period shall:

(i) Surrender the NO_X allowances required for deduction under §96.54(d)(1); and

(ii) Pay any fine, penalty, or assessment or comply with any other remedy imposed under §96.54(d)(3).

(e) *Recordkeeping and Reporting requirements.* (1) Unless otherwise provided, the owners and operators of the NO_X Budget source and each NO_X Budget unit at the source shall keep on site at the source each of the following documents for a period of 5 years from the date the document is created. This period may be extended for cause, at any time prior to the end of 5 years, in writing by the permitting authority or the Administrator.

(i) The account certificate of representation for the NO_X authorized account representative for the source and each NO_X Budget unit at the source and all documents that demonstrate the truth of the statements in the account certificate of representation, in accordance with §96.13; provided that the certificate and documents shall be retained on site at the source beyond such 5-year period until such documents are superseded because of the submission of a new account certificate of representation changing the NO_X authorized account representative.

(ii) All emissions monitoring information, in accordance with subpart H of this part; provided that to the extent that subpart H of this part provides for a 3-year period for recordkeeping, the 3-year period shall apply.

(iii) Copies of all reports, compliance certifications, and other submissions and all records made or required under the NO_X Budget Trading Program.

(iv) Copies of all documents used to complete a NO_X Budget permit application and any other submission under the NO_X Budget Trading Program or to demonstrate compliance with the requirements of the NO_X Budget Trading Program.

(2) The NO_X authorized account representative of a NO_X Budget source and each NO_X Budget unit at the source shall submit the reports and compliance certifications required under the NO_X Budget Trading Program, including those under subparts D, H, or I of this part.

(f) *Liability*. (1) Any person who knowingly violates any requirement or prohibition of the NO_X Budget Trading Program, a NO_X Budget permit, or an exemption under § 96.5 shall be subject to enforcement pursuant to applicable State or Federal law.

(2) Any person who knowingly makes a false material statement in any record, submission, or report under the NO_X Budget Trading Program shall be subject to criminal enforcement pursuant to the applicable State or Federal law.

(3) No permit revision shall excuse any violation of the requirements of the NO_X Budget Trading Program that occurs prior to the date that the revision takes effect.

(4) Each NO_X Budget source and each NO_X Budget unit shall meet the requirements of the NO_X Budget Trading Program.

(5) Any provision of the NO_X Budget Trading Program that applies to a NO_X Budget source (including a provision applicable to the NO_X authorized account representative of a NO_X Budget source) shall also apply to the owners and operators of such source and of the NO_X Budget units at the source.

(6) Any provision of the NO_X Budget Trading Program that applies to a NO_X Budget unit (including a provision applicable to the NO_X authorized account representative of a NO_X budget unit) shall also apply to the owners and operators of such unit. Except with regard to the requirements applicable to units with a common stack under subpart H of this part, the owners and operators and the NO_X authorized account representative of one NO_X Budget unit shall not be liable for any violation by any other NO_X Budget unit of which they are not owners or operators or the NO_X authorized account representative and that is located at a source of which they are not owners or operators or the NO_X authorized account representative.

(g) *Effect on other authorities*. No provision of the NO_X Budget Trading Program, a NO_X Budget permit application, a NO_X Budget permit, or an exemption under § 96.5 shall be construed as exempting or excluding the owners and operators and, to the extent applicable, the NO_X authorized account representative of a NO_X Budget source or NO_X Budget unit from compliance with any other provision of the applicable, approved State implementation plan, a federally enforceable permit, or the CAA.

§ 96.7 Computation of time.

(a) Unless otherwise stated, any time period scheduled, under the NO_X Budget Trading Program, to begin on the occurrence of an act or event shall begin on the day the act or event occurs.

(b) Unless otherwise stated, any time period scheduled, under the NO_X Budget Trading Program, to begin before the occurrence of an act or event shall be computed so that the period ends the day before the act or event occurs.

(c) Unless otherwise stated, if the final day of any time period, under the NO_X Budget Trading Program, falls on a weekend or a State or Federal holiday, the time period shall be extended to the next business day.

Subpart B—NO_X Authorized Account Representative for NO_X Budget Sources

§ 96.10 Authorization and responsibilities of the NO_X authorized account representative.

(a) Except as provided under § 96.11, each NO_X Budget source, including all NO_X Budget units at the source, shall have one and only one NO_X authorized account representative, with regard to all matters under the NO_X Budget Trading Program concerning the source or any NO_X Budget unit at the source.

(b) The NO_X authorized account representative of the NO_X Budget source shall be selected by an agreement binding on the owners and operators of the source and all NO_X Budget units at the source.

(c) Upon receipt by the Administrator of a complete account certificate of representation under §96.13, the NO_X authorized account representative of the source shall represent and, by his or her representations, actions, inactions, or submissions, legally bind each owner and operator of the NO_X Budget source represented and each NO_X Budget unit at the source in all matters pertaining to the NO_X Budget Trading Program, not withstanding any agreement between the NO_X authorized account representative and such owners and operators. The owners and operators shall be bound by any decision or order issued to the NO_X authorized account representative by the permitting authority, the Administrator, or a court regarding the source or unit.

(d) No NO_X Budget permit shall be issued, and no NO_X Allowance Tracking System account shall be established for a NO_X Budget unit at a source, until the Administrator has received a complete account certificate of representation under §96.13 for a NO_X authorized account representative of the source and the NO_X Budget units at the source.

(e)(1) Each submission under the NO_X Budget Trading Program shall be submitted, signed, and certified by the NO_X authorized account representative for each NO_X Budget source on behalf of which the submission is made. Each such submission shall include the following certification statement by the NO_X authorized account representative: ''I am authorized to make this submission on behalf of the owners and operators of the NO_X Budget sources or NO_X Budget units for which the submission is made. I certify under penalty of law that I have personally examined, and am familiar with, the statements and information submitted in this document and all its attachments. Based on my inquiry of those individuals with primary responsibility for obtaining the information, I certify that the statements and information are to the best of my knowledge and belief true, accurate, and complete. I am aware that there are significant penalties for submitting false statements and information or omitting required statements and information, including the possibility of fine or imprisonment.''

(2) The permitting authority and the Administrator will accept or act on a submission made on behalf of owner or operators of a NO_X Budget source or a NO_X Budget unit only if the submission has been made, signed, and certified in accordance with paragraph (e)(1) of this section.

§96.11 Alternate NO_X authorized account representative.

(a) An account certificate of representation may designate one and only one alternate NO_X authorized account representative who may act on behalf of the NO_X authorized account representative. The agreement by which the alternate NO_X authorized account representative is selected shall include a procedure for authorizing the alternate NO_X authorized account representative to act in lieu of the NO_X authorized account representative.

(b) Upon receipt by the Administrator of a complete account certificate of representation under §96.13, any representation, action, inaction, or submission by the alternate NO_X authorized account representative shall be deemed to be a representation, action, inaction, or submission by the NO_X authorized account representative.

(c) Except in this section and §§96.10(a), 96.12, 96.13, and 96.51, whenever the term ''NO_X authorized account representative'' is used in this part, the term shall be construed to include the alternate NO_X authorized account representative.

§96.12 Changing the NO_X authorized account representative and the alternate NO_X authorized account representative; changes in the owners and operators.

(a) *Changing the NO_X authorized account representative.* The NO_X authorized account representative may be changed at any time upon receipt by the Administrator of a superseding complete account certificate of representation under §96.13. Notwithstanding any such change, all representations, actions, inactions, and submissions by the previous NO_X authorized account representative prior to the time and date when the Administrator

receives the superseding account certificate of representation shall be binding on the new NO_X authorized account representative and the owners and operators of the NO_X Budget source and the NO_X Budget units at the source.

(b) Changing the alternate NO_X authorized account representative. The alternate NO_X authorized account representative may be changed at any time upon receipt by the Administrator of a superseding complete account certificate of representation under § 96.13. Notwithstanding any such change, all representations, actions, inactions, and submissions by the previous alternate NO_X authorized account representative prior to the time and date when the Administrator receives the superseding account certificate of representation shall be binding on the new alternate NO_X authorized account representative and the owners and operators of the NO_X Budget source and the NO_X Budget units at the source.

(c) *Changes in the owners and operators.* (1) In the event a new owner or operator of a NO_X Budget source or a NO_X Budget unit is not included in the list of owners and operators submitted in the account certificate of representation, such new owner or operator shall be deemed to be subject to and bound by the account certificate of representation, the representations, actions, inactions, and submissions of the NO_X authorized account representative and any alternate NO_X authorized account representative of the source or unit, and the decisions, orders, actions, and inactions of the permitting authority or the Administrator, as if the new owner or operator were included in such list.

(2) Within 30 days following any change in the owners and operators of a NO_X Budget source or a NO_X Budget unit, including the addition of a new owner or operator, the NO_X authorized account representative or alternate NO_X authorized account representative shall submit a revision to the account certificate of representation amending the list of owners and operators to include the change.

§ 96.13 Account certificate of representation.

(a) A complete account certificate of representation for a NO_X authorized account representative or an alternate NO_X authorized account representative shall include the following elements in a format prescribed by the Administrator:

(1) Identification of the NO_X Budget source and each NO_X Budget unit at the source for which the account certificate of representation is submitted.

(2) The name, address, e-mail address (if any), telephone number, and facsimile transmission number (if any) of the NO_X authorized account representative and any alternate NO_X authorized account representative.

(3) A list of the owners and operators of the NO_X Budget source and of each NO_X Budget unit at the source.

(4) The following certification statement by the NO_X authorized account representative and any alternate NO_X authorized account representative: ''I certify that I was selected as the NO_X authorized account representative or alternate NO_X authorized account representative, as applicable, by an agreement binding on the owners and operators of the NO_X Budget source and each NO_X Budget unit at the source. I certify that I have all the necessary authority to carry out my duties and responsibilities under the NO_X Budget Trading Program on behalf of the owners and operators of the NO_X Budget source and of each NO_X Budget unit at the source and that each such owner and operator shall be fully bound by my representations, actions, inactions, or submissions and by any decision or order issued to me by the permitting authority, the Administrator, or a court regarding the source or unit.''

(5) The signature of the NO_X authorized account representative and any alternate NO_X authorized account representative and the dates signed.

(b) Unless otherwise required by the permitting authority or the Administrator, documents of agreement referred to in the account certificate of representation shall not be submitted to the permitting authority or the Administrator. Neither the permitting authority nor the Administrator shall be under any obligation to review or

evaluate the sufficiency of such documents, if submitted.

§96.14 Objections concerning the NO_X authorized account representative.

(a) Once a complete account certificate of representation under §96.13 has been submitted and received, the permitting authority and the Administrator will rely on the account certificate of representation unless and until a superseding complete account certificate of representation under §96.13 is received by the Administrator.

(b) Except as provided in §96.12(a) or (b), no objection or other communication submitted to the permitting authority or the Administrator concerning the authorization, or any representation, action, inaction, or submission of the NO_X authorized account representative shall affect any representation, action, inaction, or submission of the NO_X authorized account representative or the finality of any decision or order by the permitting authority or the Administrator under the NO_X Budget Trading Program.

(c) Neither the permitting authority nor the Administrator will adjudicate any private legal dispute concerning the authorization or any representation, action, inaction, or submission of any NO_X authorized account representative, including private legal disputes concerning the proceeds of NO_X allowance transfers.

Subpart C—Permits

§96.20 General NO_X Budget trading program permit requirements.

(a) For each NO_X Budget source required to have a federally enforceable permit, such permit shall include a NO_X Budget permit administered by the permitting authority.

(1) For NO_X Budget sources required to have a title V operating permit, the NO_X Budget portion of the title V permit shall be administered in accordance with the permitting authority's title V operating permits regulations promulgated under part 70 or 71 of this chapter, except as provided otherwise by this subpart or subpart I of this part. The applicable provisions of such title V operating permits regulations shall include, but are not limited to, those provisions addressing operating permit applications, operating permit application shield, operating permit duration, operating permit shield, operating permit issuance, operating permit revision and reopening, public participation, State review, and review by the Administrator.

(2) For NO_X Budget sources required to have a non-title V permit, the NO_X Budget portion of the non-title V permit shall be administered in accordance with the permitting authority's regulations promulgated to administer non-title V permits, except as provided otherwise by this subpart or subpart I of this part. The applicable provisions of such non-title V permits regulations may include, but are not limited to, provisions addressing permit applications, permit application shield, permit duration, permit shield, permit issuance, permit revision and reopening, public participation, State review, and review by the Administrator.

(b) Each NO_X Budget permit (including a draft or proposed NO_X Budget permit, if applicable) shall contain all applicable NO_X Budget Trading Program requirements and shall be a complete and segregable portion of the permit under paragraph (a) of this section.

§96.21 Submission of NO_X Budget permit applications.

(a) *Duty to apply*. The NO_X authorized account representative of any NO_X Budget source required to have a federally enforceable permit shall submit to the permitting authority a complete NO_X Budget permit application under §96.22 by the applicable deadline in paragraph (b) of this section.

(b)(1) For NO_X Budget sources required to have a title V operating permit:

(i) For any source, with one or more NO_X Budget units under §96.4 that commence operation before January 1, 2000, the NO_X authorized account representative shall submit a complete NO_X Budget permit application under §96.22 covering such NO_X Budget units to the permitting authority at least 18 months (or such lesser time provided under the permitting authority's title V operating permits regulations for final action on a permit application) before May 1, 2003.

(ii) For any source, with any NO_X Budget unit under § 96.4 that commences operation on or after January 1, 2000, the NO_X authorized account representative shall submit a complete NO_X Budget permit application under § 96.22 covering such NO_X Budget unit to the permitting authority at least 18 months (or such lesser time provided under the permitting authority's title V operating permits regulations for final action on a permit application) before the later of May 1, 2003 or the date on which the NO_X Budget unit commences operation.

(2) For NO_X Budget sources required to have a non-title V permit:

(i) For any source, with one or more NO_X Budget units under § 96.4 that commence operation before January 1, 2000, the NO_X authorized account representative shall submit a complete NO_X Budget permit application under § 96.22 covering such NO_X Budget units to the permitting authority at least 18 months (or such lesser time provided under the permitting authority's non-title V permits regulations for final action on a permit application) before May 1, 2003.

(ii) For any source, with any NO_X Budget unit under § 96.4 that commences operation on or after January 1, 2000, the NO_X authorized account representative shall submit a complete NO_X Budget permit application under § 96.22 covering such NO_X Budget unit to the permitting authority at least 18 months (or such lesser time provided under the permitting authority's non-title V permits regulations for final action on a permit application) before the later of May 1, 2003 or the date on which the NO_X Budget unit commences operation.

(c) *Duty to reapply*. (1) For a NO_X Budget source required to have a title V operating permit, the NO_X authorized account representative shall submit a complete NO_X Budget permit application under § 96.22 for the NO_X Budget source covering the NO_X Budget units at the source in accordance with the permitting authority's title V operating permits regulations addressing operating permit renewal.

(2) For a NO_X Budget source required to have a non-title V permit, the NO_X authorized account representative shall submit a complete NO_X Budget permit application under § 96.22 for the NO_X Budget source covering the NO_X Budget units at the source in accordance with the permitting authority's non-title V permits regulations addressing permit renewal.

§ 96.22 Information requirements for NO_X Budget permit applications.

A complete NO_X Budget permit application shall include the following elements concerning the NO_X Budget source for which the application is submitted, in a format prescribed by the permitting authority:

(a) Identification of the NO_X Budget source, including plant name and the ORIS (Office of Regulatory Information Systems) or facility code assigned to the source by the Energy Information Administration, if applicable;

(b) Identification of each NO_X Budget unit at the NO_X Budget source and whether it is a NO_X Budget unit under § 96.4 or under subpart I of this part;

(c) The standard requirements under § 96.6; and

(d) For each NO_X Budget opt-in unit at the NO_X Budget source, the following certification statements by the NO_X authorized account representative:

(1) ''I certify that each unit for which this permit application is submitted under subpart I of this part is not a NO_X Budget unit under 40 CFR 96.4 and is not covered by a retired unit exemption under 40 CFR 96.5 that is in effect.''

(2) If the application is for an initial NO_X Budget opt-in permit, ''I certify that each unit for which this permit application is submitted under subpart I is currently operating, as that term is defined under 40 CFR 96.2.''

§ 96.23 NO_X Budget permit contents.

(a) Each NO_X Budget permit (including any draft or proposed NO_X Budget permit, if applicable) will contain, in a format prescribed by the permitting authority, all elements required for a complete NO_X Budget permit application under § 96.22 as approved or adjusted by the permitting authority.

(b) Each NO_X Budget permit is deemed to incorporate automatically the definitions of terms under § 96.2

and, upon recordation by the Administrator under subparts F, G, or I of this part, every allocation, transfer, or deduction of a NO_X allowance to or from the compliance accounts of the NO_X Budget units covered by the permit or the overdraft account of the NO_X Budget source covered by the permit.

§96.24 Effective date of initial NO_X Budget permit.

The initial NO_X Budget permit covering a NO_X Budget unit for which a complete NO_X Budget permit application is timely submitted under §96.21(b) shall become effective by the later of:

(a) May 1, 2003;

(b) May 1 of the year in which the NO_X Budget unit commences operation, if the unit commences operation on or before May 1 of that year;

(c) The date on which the NO_X Budget unit commences operation, if the unit commences operation during a control period; or

(d) May 1 of the year following the year in which the NO_X Budget unit commences operation, if the unit commences operation on or after October 1 of the year.

§96.25 NO_X Budget permit revisions.

(a) For a NO_X Budget source with a title V operating permit, except as provided in §96.23(b), the permitting authority will revise the NO_X Budget permit, as necessary, in accordance with the permitting authority's title V operating permits regulations addressing permit revisions.

(b) For a NO_X Budget source with a non-title V permit, except as provided in §96.23(b), the permitting authority will revise the NO_X Budget permit, as necessary, in accordance with the permitting authority's non-title V permits regulations addressing permit revisions.

Subpart D—Compliance Certification

§96.30 Compliance certification report.

(a) *Applicability and deadline.* For each control period in which one or more NO_X Budget units at a source are subject to the NO_X Budget emissions limitation, the NO_X authorized account representative of the source shall submit to the permitting authority and the Administrator by November 30 of that year, a compliance certification report for each source covering all such units.

(b) *Contents of report.* The NO_X authorized account representative shall include in the compliance certification report under paragraph (a) of this section the following elements, in a format prescribed by the Administrator, concerning each unit at the source and subject to the NO_X Budget emissions limitation for the control period covered by the report:

(1) Identification of each NO_X Budget unit;

(2) At the NO_X authorized account representative's option, the serial numbers of the NO_X allowances that are to be deducted from each unit's compliance account under §96.54 for the control period;

(3) At the NO_X authorized account representative's option, for units sharing a common stack and having NO_X emissions that are not monitored separately or apportioned in accordance with subpart H of this part, the percentage of allowances that is to be deducted from each unit's compliance account under §96.54(e); and

(4) The compliance certification under paragraph (c) of this section.

(c) *Compliance certification.* In the compliance certification report under paragraph (a) of this section, the NO_X authorized account representative shall certify, based on reasonable inquiry of those persons with primary responsibility for operating the source and the NO_X Budget units at the source in compliance with the NO_X Budget Trading Program, whether each NO_X Budget unit for which the compliance certification is submitted was operated during the calendar year covered by the report in compliance with the requirements of the NO_X Budget Trading Program applicable to the unit, including:

(1) Whether the unit was operated in compliance with the NO_X Budget emissions limitation;

(2) Whether the monitoring plan that governs the unit has been maintained to reflect the actual operation and monitoring of the unit, and contains

all information necessary to attribute NO_X emissions to the unit, in accordance with subpart H of this part;

(3) Whether all the NO_X emissions from the unit, or a group of units (including the unit) using a common stack, were monitored or accounted for through the missing data procedures and reported in the quarterly monitoring reports, including whether conditional data were reported in the quarterly reports in accordance with subpart H of this part. If conditional data were reported, the owner or operator shall indicate whether the status of all conditional data has been resolved and all necessary quarterly report resubmissions has been made;

(4) Whether the facts that form the basis for certification under subpart H of this part of each monitor at the unit or a group of units (including the unit) using a common stack, or for using an excepted monitoring method or alternative monitoring method approved under subpart H of this part, if any, has changed; and

(5) If a change is required to be reported under paragraph (c)(4) of this section, specify the nature of the change, the reason for the change, when the change occurred, and how the unit's compliance status was determined subsequent to the change, including what method was used to determine emissions when a change mandated the need for monitor recertification.

§ 96.31 Permitting authority's and Administrator's action on compliance certifications.

(a) The permitting authority or the Administrator may review and conduct independent audits concerning any compliance certification or any other submission under the NO_X Budget Trading Program and make appropriate adjustments of the information in the compliance certifications or other submissions.

(b) The Administrator may deduct NO_X allowances from or transfer NO_X allowances to a unit's compliance account or a source's overdraft account based on the information in the compliance certifications or other submissions, as adjusted under paragraph (a) of this section.

Subpart E—NO_X Allowance Allocations

§ 96.40 State trading program budget.

The State trading program budget allocated by the permitting authority under § 96.42 for a control period will equal the total number of tons of NO_X emissions apportioned to the NO_X Budget units under § 96.4 in the State for the control period, as determined by the applicable, approved State implementation plan.

§ 96.41 Timing requirements for NO_X allowance allocations.

(a) By September 30, 1999, the permitting authority will submit to the Administrator the NO_X allowance allocations, in accordance with § 96.42, for the control periods in 2003, 2004, and 2005.

(b) By April 1, 2003 and April 1 of each year thereafter, the permitting authority will submit to the Administrator the NO_X allowance allocations, in accordance with § 96.42, for the control period in the year that is three years after the year of the applicable deadline for submission under this paragraph (b). If the permitting authority fails to submit to the Administrator the NO_X allowance allocations in accordance with this paragraph (b), the Administrator will allocate, for the applicable control period, the same number of NO_X allowances as were allocated for the preceding control period.

(c) By April 1, 2004 and April 1 of each year thereafter, the permitting authority will submit to the Administrator the NO_X allowance allocations, in accordance with § 96.42, for any NO_X allowances remaining in the allocation set-aside for the prior control period.

§ 96.42 NO_X allowance allocations.

(a)(1) The heat input (in mmBtu) used for calculating NO_X allowance allocations for each NO_X Budget unit under § 96.4 will be:

(i) For a NO_X allowance allocation under § 96.41(a), the average of the two highest amounts of the unit's heat input for the control periods in 1995, 1996, and 1997 if the unit is under § 96.4(a)(1) or the control period in 1995 if the unit is under § 96.4(a)(2); and

(ii) For a NO_X allowance allocation under § 96.41(b), the unit's heat input

for the control period in the year that is four years before the year for which the NO_X allocation is being calculated.

(2) The unit's total heat input for the control period in each year specified under paragraph (a)(1) of this section will be determined in accordance with part 75 of this chapter if the NO_X Budget unit was otherwise subject to the requirements of part 75 of this chapter for the year, or will be based on the best available data reported to the permitting authority for the unit if the unit was not otherwise subject to the requirements of part 75 of this chapter for the year.

(b) For each control period under §96.41, the permitting authority will allocate to all NO_X Budget units under §96.4(a)(1) in the State that commenced operation before May 1 of the period used to calculate heat input under paragraph (a)(1) of this section, a total number of NO_X allowances equal to 95 percent in 2003, 2004, and 2005, or 98 percent thereafter, of the tons of NO_X emissions in the State trading program budget apportioned to electric generating units under §96.40 in accordance with the following procedures:

(1) The permitting authority will allocate NO_X allowances to each NO_X Budget unit under §96.4(a)(1) in an amount equaling 0.15 lb/mmBtu multiplied by the heat input determined under paragraph (a) of this section, rounded to the nearest whole NO_X allowance as appropriate.

(2) If the initial total number of NO_X allowances allocated to all NO_X Budget units under §96.4(a)(1) in the State for a control period under paragraph (b)(1) of this section does not equal 95 percent in 2003, 2004, and 2005, or 98 percent thereafter, of the number of tons of NO_X emissions in the State trading program budget apportioned to electric generating units, the permitting authority will adjust the total number of NO_X allowances allocated to all such NO_X Budget units for the control period under paragraph (b)(1) of this section so that the total number of NO_X allowances allocated equals 95 percent in 2003, 2004, and 2005, or 98 percent thereafter, of the number of tons of NO_X emissions in the State trading program budget apportioned to electric generating units. This adjustment will be made by: multiplying each unit's allocation by 95 percent in 2003, 2004, and 2005, or 98 percent thereafter, of the number of tons of NO_X emissions in the State trading program budget apportioned to electric generating units divided by the total number of NO_X allowances allocated under paragraph (b)(1) of this section, and rounding to the nearest whole NO_X allowance as appropriate.

(c) For each control period under §96.41, the permitting authority will allocate to all NO_X Budget units under §96.4(a)(2) in the State that commenced operation before May 1 of the period used to calculate heat input under paragraph (a)(1) of this section, a total number of NO_X allowances equal to 95 percent in 2003, 2004, and 2005, or 98 percent thereafter, of the tons of NO_X emissions in the State trading program budget apportioned to non-electric generating units under §96.40 in accordance with the following procedures:

(1) The permitting authority will allocate NO_X allowances to each NO_X Budget unit under §96.4(a)(2) in an amount equaling 0.17 lb/mmBtu multiplied by the heat input determined under paragraph (a) of this section, rounded to the nearest whole NO_X allowance as appropriate.

(2) If the initial total number of NO_X allowances allocated to all NO_X Budget units under §96.4(a)(2) in the State for a control period under paragraph (c)(1) of this section does not equal 95 percent in 2003, 2004, and 2005, or 98 percent thereafter, of the number of tons of NO_X emissions in the State trading program budget apportioned to non-electric generating units, the permitting authority will adjust the total number of NO_X allowances allocated to all such NO_X Budget units for the control period under paragraph (c)(1) of this section so that the total number of NO_X allowances allocated equals 95 percent in 2003, 2004, and 2005, or 98 percent thereafter, of the number of tons of NO_X emissions in the State trading program budget apportioned to non-electric generating units. This adjustment will be made by: multiplying each unit's allocation by 95 percent in 2003, 2004, and 2005, or 98 percent thereafter, of the number of tons of NO_X emissions in the State trading program

budget apportioned to non-electric generating units divided by the total number of NO_X allowances allocated under paragraph (c)(1) of this section, and rounding to the nearest whole NO_X allowance as appropriate.

(d) For each control period under § 96.41, the permitting authority will allocate NO_X allowances to NO_X Budget units under § 96.4 in the State that commenced operation, or is projected to commence operation, on or after May 1 of the period used to calculate heat input under paragraph (a)(1) of this section, in accordance with the following procedures:

(1) The permitting authority will establish one allocation set-aside for each control period. Each allocation set-aside will be allocated NO_X allowances equal to 5 percent in 2003, 2004, and 2005, or 2 percent thereafter, of the tons of NO_X emissions in the State trading program budget under § 96.40, rounded to the nearest whole NO_X allowance as appropriate.

(2) The NO_X authorized account representative of a NO_X Budget unit under paragraph (d) of this section may submit to the permitting authority a request, in writing or in a format specified by the permitting authority, to be allocated NO_X allowances for no more than five consecutive control periods under § 96.41, starting with the control period during which the NO_X Budget unit commenced, or is projected to commence, operation and ending with the control period preceding the control period for which it will receive an allocation under paragraph (b) or (c) of this section. The NO_X allowance allocation request must be submitted prior to May 1 of the first control period for which the NO_X allowance allocation is requested and after the date on which the permitting authority issues a permit to construct the NO_X Budget unit.

(3) In a NO_X allowance allocation request under paragraph (d)(2) of this section, the NO_X authorized account representative for units under § 96.4(a)(1) may request for a control period NO_X allowances in an amount that does not exceed 0.15 lb/mmBtu multiplied by the NO_X Budget unit's maximum design heat input (in mmBtu/hr) multiplied by the number of hours remaining in the control period starting with the first day in the control period on which the unit operated or is projected to operate.

(4) In a NO_X allowance allocation request under paragraph (d)(2) of this section, the NO_X authorized account representative for units under § 96.4(a)(2) may request for a control period NO_X allowances in an amount that does not exceed 0.17 lb/mmBtu multiplied by the NO_X Budget unit's maximum design heat input (in mmBtu/hr) multiplied by the number of hours remaining in the control period starting with the first day in the control period on which the unit operated or is projected to operate.

(5) The permitting authority will review, and allocate NO_X allowances pursuant to, each NO_X allowance allocation request under paragraph (d)(2) of this section in the order that the request is received by the permitting authority.

(i) Upon receipt of the NO_X allowance allocation request, the permitting authority will determine whether, and will make any necessary adjustments to the request to ensure that, for units under § 96.4(a)(1), the control period and the number of allowances specified are consistent with the requirements of paragraphs (d)(2) and (3) of this section and, for units under § 96.4(a)(2), the control period and the number of allowances specified are consistent with the requirements of paragraphs (d)(2) and (4) of this section.

(ii) If the allocation set-aside for the control period for which NO_X allowances are requested has an amount of NO_X allowances not less than the number requested (as adjusted under paragraph (d)(5)(i) of this section), the permitting authority will allocate the amount of the NO_X allowances requested (as adjusted under paragraph (d)(5)(i) of this section) to the NO_X Budget unit.

(iii) If the allocation set-aside for the control period for which NO_X allowances are requested has a smaller amount of NO_X allowances than the number requested (as adjusted under paragraph (d)(5)(i) of this section), the permitting authority will deny in part the request and allocate only the remaining number of NO_X allowances in

the allocation set-aside to the NO_X Budget unit.

(iv) Once an allocation set-aside for a control period has been depleted of all NO_X allowances, the permitting authority will deny, and will not allocate any NO_X allowances pursuant to, any NO_X allowance allocation request under which NO_X allowances have not already been allocated for the control period.

(6) Within 60 days of receipt of a NO_X allowance allocation request, the permitting authority will take appropriate action under paragraph (d)(5) of this section and notify the NO_X authorized account representative that submitted the request and the Administrator of the number of NO_X allowances (if any) allocated for the control period to the NO_X Budget unit.

(e) For a NO_X Budget unit that is allocated NO_X allowances under paragraph (d) of this section for a control period, the Administrator will deduct NO_X allowances under §96.54(b) or (e) to account for the actual utilization of the unit during the control period. The Administrator will calculate the number of NO_X allowances to be deducted to account for the unit's actual utilization using the following formulas and rounding to the nearest whole NO_X allowance as appropriate, provided that the number of NO_X allowances to be deducted shall be zero if the number calculated is less than zero:

NO_X allowances deducted for actual utilization for units under §96.4(a)(1) = (Unit's NO_X allowances allocated for control period) − (Unit's actual control period utilization × 0.15 lb/mmBtu); and

NO_X allowances deducted for actual utilization for units under §96.4(a)(2) = (Unit's NO_X allowances allocated for control period) − (Unit's actual control period utilization × 0.17 lb/mmBtu)

Where:

''Unit's NO_X allowances allocated for control period'' is the number of NO_X allowances allocated to the unit for the control period under paragraph (d) of this section; and

''Unit's actual control period utilization'' is the utilization (in mmBtu), as defined in §96.2, of the unit during the control period.

(f) After making the deductions for compliance under §96.54(b) or (e) for a control period, the Administrator will notify the permitting authority whether any NO_X allowances remain in the allocation set-aside for the control period. The permitting authority will allocate any such NO_X allowances to the NO_X Budget units in the State using the following formula and rounding to the nearest whole NO_X allowance as appropriate:

Unit's share of NO_X allowances remaining in allocation set-aside = Total NO_X allowances remaining in allocation set-aside × (Unit's NO_X allowance allocation ÷ State trading program budget excluding allocation set-aside)

Where:

''Total NO_X allowances remaining in allocation set-aside'' is the total number of NO_X allowances remaining in the allocation set-aside for the control period to which the allocation set-aside applies;

''Unit's NO_X allowance allocation'' is the number of NO_X allowances allocated under paragraph (b) or (c) of this section to the unit for the control period to which the allocation set-aside applies; and

''State trading program budget excluding allocation set-aside'' is the State trading program budget under §96.40 for the control period to which the allocation set-aside applies multiplied by 95 percent if the control period is in 2003, 2004, or 2005 or 98 percent if the control period is in any year thereafter, rounded to the nearest whole NO_X allowance as appropriate.

[63 FR 57514, Oct. 27, 1998, as amended at 63 FR 71225, Dec. 24, 1998]

Subpart F—NO_X Allowance Tracking System

§96.50 NO_X Allowance Tracking System accounts.

(a) *Nature and function of compliance accounts and overdraft accounts.* Consistent with §96.51(a), the Administrator will establish one compliance account for each NO_X Budget unit and one overdraft account for each source with one or more NO_X Budget units. Allocations of NO_X allowances pursuant to subpart E of this part or §96.88 and deductions or transfers of NO_X allowances pursuant to §96.31, §96.54, §96.56, subpart G of this part, or subpart I of

this part will be recorded in the compliance accounts or overdraft accounts in accordance with this subpart.

(b) *Nature and function of general accounts.* Consistent with § 96.51(b), the Administrator will establish, upon request, a general account for any person. Transfers of allowances pursuant to subpart G of this part will be recorded in the general account in accordance with this subpart.

§ 96.51 Establishment of accounts.

(a) *Compliance accounts and overdraft accounts.* Upon receipt of a complete account certificate of representation under § 96.13, the Administrator will establish:

(1) A compliance account for each NO_X Budget unit for which the account certificate of representation was submitted; and

(2) An overdraft account for each source for which the account certificate of representation was submitted and that has two or more NO_X Budget units.

(b) *General accounts.* (1) Any person may apply to open a general account for the purpose of holding and transferring allowances. A complete application for a general account shall be submitted to the Administrator and shall include the following elements in a format prescribed by the Administrator:

(i) Name, mailing address, e-mail address (if any), telephone number, and facsimile transmission number (if any) of the NO_X authorized account representative and any alternate NO_X authorized account representative;

(ii) At the option of the NO_X authorized account representative, organization name and type of organization;

(iii) A list of all persons subject to a binding agreement for the NO_X authorized account representative or any alternate NO_X authorized account representative to represent their ownership interest with respect to the allowances held in the general account;

(iv) The following certification statement by the NO_X authorized account representative and any alternate NO_X authorized account representative: ''I certify that I was selected as the NO_X authorized account representative or the NO_X alternate authorized account representative, as applicable, by an agreement that is binding on all persons who have an ownership interest with respect to allowances held in the general account. I certify that I have all the necessary authority to carry out my duties and responsibilities under the NO_X Budget Trading Program on behalf of such persons and that each such person shall be fully bound by my representations, actions, inactions, or submissions and by any order or decision issued to me by the Administrator or a court regarding the general account.''

(v) The signature of the NO_X authorized account representative and any alternate NO_X authorized account representative and the dates signed.

(vi) Unless otherwise required by the permitting authority or the Administrator, documents of agreement referred to in the account certificate of representation shall not be submitted to the permitting authority or the Administrator. Neither the permitting authority nor the Administrator shall be under any obligation to review or evaluate the sufficiency of such documents, if submitted.

(2) Upon receipt by the Administrator of a complete application for a general account under paragraph (b)(1) of this section:

(i) The Administrator will establish a general account for the person or persons for whom the application is submitted.

(ii) The NO_X authorized account representative and any alternate NO_X authorized account representative for the general account shall represent and, by his or her representations, actions, inactions, or submissions, legally bind each person who has an ownership interest with respect to NO_X allowances held in the general account in all matters pertaining to the NO_X Budget Trading Program, not withstanding any agreement between the NO_X authorized account representative or any alternate NO_X authorized account representative and such person. Any such person shall be bound by any order or decision issued to the NO_X authorized account representative or any alternate NO_X authorized account representative by the Administrator or a court regarding the general account.

(iii) Each submission concerning the general account shall be submitted, signed, and certified by the NO_X authorized account representative or any alternate NO_X authorized account representative for the persons having an ownership interest with respect to NO_X allowances held in the general account. Each such submission shall include the following certification statement by the NO_X authorized account representative or any alternate NO_X authorized account representative any: ''I am authorized to make this submission on behalf of the persons having an ownership interest with respect to the NO_X allowances held in the general account. I certify under penalty of law that I have personally examined, and am familiar with, the statements and information submitted in this document and all its attachments. Based on my inquiry of those individuals with primary responsibility for obtaining the information, I certify that the statements and information are to the best of my knowledge and belief true, accurate, and complete. I am aware that there are significant penalties for submitting false statements and information or omitting required statements and information, including the possibility of fine or imprisonment.''

(iv) The Administrator will accept or act on a submission concerning the general account only if the submission has been made, signed, and certified in accordance with paragraph (b)(2)(iii) of this section.

(3)(i) An application for a general account may designate one and only one NO_X authorized account representative and one and only one alternate NO_X authorized account representative who may act on behalf of the NO_X authorized account representative. The agreement by which the alternate NO_X authorized account representative is selected shall include a procedure for authorizing the alternate NO_X authorized account representative to act in lieu of the NO_X authorized account representative.

(ii) Upon receipt by the Administrator of a complete application for a general account under paragraph (b)(1) of this section, any representation, action, inaction, or submission by any alternate NO_X authorized account representative shall be deemed to be a representation, action, inaction, or submission by the NO_X authorized account representative.

(4)(i) The NO_X authorized account representative for a general account may be changed at any time upon receipt by the Administrator of a superseding complete application for a general account under paragraph (b)(1) of this section. Notwithstanding any such change, all representations, actions, inactions, and submissions by the previous NO_X authorized account representative prior to the time and date when the Administrator receives the superseding application for a general account shall be binding on the new NO_X authorized account representative and the persons with an ownership interest with respect to the allowances in the general account.

(ii) The alternate NO_X authorized account representative for a general account may be changed at any time upon receipt by the Administrator of a superseding complete application for a general account under paragraph (b)(1) of this section. Notwithstanding any such change, all representations, actions, inactions, and submissions by the previous alternate NO_X authorized account representative prior to the time and date when the Administrator receives the superseding application for a general account shall be binding on the new alternate NO_X authorized account representative and the persons with an ownership interest with respect to the allowances in the general account.

(iii)(A) In the event a new person having an ownership interest with respect to NO_X allowances in the general account is not included in the list of such persons in the account certificate of representation, such new person shall be deemed to be subject to and bound by the account certificate of representation, the representation, actions, inactions, and submissions of the NO_X authorized account representative and any alternate NO_X authorized account representative of the source or unit, and the decisions, orders, actions, and inactions of the Administrator, as if the new person were included in such list.

(B) Within 30 days following any change in the persons having an ownership interest with respect to NO_X allowances in the general account, including the addition of persons, the NO_X authorized account representative or any alternate NO_X authorized account representative shall submit a revision to the application for a general account amending the list of persons having an ownership interest with respect to the NO_X allowances in the general account to include the change.

(5)(i) Once a complete application for a general account under paragraph (b)(1) of this section has been submitted and received, the Administrator will rely on the application unless and until a superseding complete application for a general account under paragraph (b)(1) of this section is received by the Administrator.

(ii) Except as provided in paragraph (b)(4) of this section, no objection or other communication submitted to the Administrator concerning the authorization, or any representation, action, inaction, or submission of the NO_X authorized account representative or any alternate NO_X authorized account representative for a general account shall affect any representation, action, inaction, or submission of the NO_X authorized account representative or any alternate NO_X authorized account representative or the finality of any decision or order by the Administrator under the NO_X Budget Trading Program.

(iii) The Administrator will not adjudicate any private legal dispute concerning the authorization or any representation, action, inaction, or submission of the NO_X authorized account representative or any alternate NO_X authorized account representative for a general account, including private legal disputes concerning the proceeds of NO_X allowance transfers.

(c) *Account identification.* The Administrator will assign a unique identifying number to each account established under paragraph (a) or (b) of this section.

§ 96.52 NO_X Allowance Tracking System responsibilities of NO_X authorized account representative.

(a) Following the establishment of a NO_X Allowance Tracking System account, all submissions to the Administrator pertaining to the account, including, but not limited to, submissions concerning the deduction or transfer of NO_X allowances in the account, shall be made only by the NO_X authorized account representative for the account.

(b) *Authorized account representative identification.* The Administrator will assign a unique identifying number to each NO_X authorized account representative.

§ 96.53 Recordation of NO_X allowance allocations.

(a) The Administrator will record the NO_X allowances for 2003 in the NO_X Budget units' compliance accounts and the allocation set-asides, as allocated under subpart E of this part. The Administrator will also record the NO_X allowances allocated under § 96.88(a)(1) for each NO_X Budget opt-in source in its compliance account.

(b) Each year, after the Administrator has made all deductions from a NO_X Budget unit's compliance account and the overdraft account pursuant to § 96.54, the Administrator will record NO_X allowances, as allocated to the unit under subpart E of this part or under § 96.88(a)(2), in the compliance account for the year after the last year for which allowances were previously allocated to the compliance account. Each year, the Administrator will also record NO_X allowances, as allocated under subpart E of this part, in the allocation set-aside for the year after the last year for which allowances were previously allocated to an allocation set-aside.

(c) *Serial numbers for allocated NO_X allowances.* When allocating NO_X allowances to and recording them in an account, the Administrator will assign each NO_X allowance a unique identification number that will include digits identifying the year for which the NO_X allowance is allocated.

§ 96.54 Compliance.

(a) *NO_X allowance transfer deadline.* The NO_X allowances are available to be deducted for compliance with a unit's NO_X Budget emissions limitation for a control period in a given year only if the NO_X allowances:

(1) Were allocated for a control period in a prior year or the same year; and

(2) Are held in the unit's compliance account, or the overdraft account of the source where the unit is located, as of the NO_X allowance transfer deadline for that control period or are transferred into the compliance account or overdraft account by a NO_X allowance transfer correctly submitted for recordation under § 96.60 by the NO_X allowance transfer deadline for that control period.

(b) *Deductions for compliance.* (1) Following the recordation, in accordance with § 96.61, of NO_X allowance transfers submitted for recordation in the unit's compliance account or the overdraft account of the source where the unit is located by the NO_X allowance transfer deadline for a control period, the Administrator will deduct NO_X allowances available under paragraph (a) of this section to cover the unit's NO_X emissions (as determined in accordance with subpart H of this part), or to account for actual utilization under § 96.42(e), for the control period:

(i) From the compliance account; and

(ii) Only if no more NO_X allowances available under paragraph (a) of this section remain in the compliance account, from the overdraft account. In deducting allowances for units at the source from the overdraft account, the Administrator will begin with the unit having the compliance account with the lowest NO_X Allowance Tracking System account number and end with the unit having the compliance account with the highest NO_X Allowance Tracking System account number (with account numbers sorted beginning with the left-most character and ending with the right-most character and the letter characters assigned values in alphabetical order and less than all numeric characters).

(2) The Administrator will deduct NO_X allowances first under paragraph (b)(1)(i) of this section and then under paragraph (b)(1)(ii) of this section:

(i) Until the number of NO_X allowances deducted for the control period equals the number of tons of NO_X emissions, determined in accordance with subpart H of this part, from the unit for the control period for which compliance is being determined, plus the number of NO_X allowances required for deduction to account for actual utilization under § 96.42(e) for the control period; or

(ii) Until no more NO_X allowances available under paragraph (a) of this section remain in the respective account.

(c)(1) *Identification of NO_X allowances by serial number.* The NO_X authorized account representative for each compliance account may identify by serial number the NO_X allowances to be deducted from the unit's compliance account under paragraph (b), (d), or (e) of this section. Such identification shall be made in the compliance certification report submitted in accordance with § 96.30.

(2) *First-in, first-out.* The Administrator will deduct NO_X allowances for a control period from the compliance account, in the absence of an identification or in the case of a partial identification of NO_X allowances by serial number under paragraph (c)(1) of this section, or the overdraft account on a first-in, first-out (FIFO) accounting basis in the following order:

(i) Those NO_X allowances that were allocated for the control period to the unit under subpart E or I of this part;

(ii) Those NO_X allowances that were allocated for the control period to any unit and transferred and recorded in the account pursuant to subpart G of this part, in order of their date of recordation;

(iii) Those NO_X allowances that were allocated for a prior control period to the unit under subpart E or I of this part; and

(iv) Those NO_X allowances that were allocated for a prior control period to any unit and transferred and recorded in the account pursuant to subpart G of this part, in order of their date of recordation.

(d) *Deductions for excess emissions.* (1) After making the deductions for compliance under paragraph (b) of this section, the Administrator will deduct from the unit's compliance account or the overdraft account of the source where the unit is located a number of NO_X allowances, allocated for a control period after the control period in which the unit has excess emissions, equal to three times the number of the unit's excess emissions.

(2) If the compliance account or overdraft account does not contain sufficient NO_X allowances, the Administrator will deduct the required number of NO_X allowances, regardless of the control period for which they were allocated, whenever NO_X allowances are recorded in either account.

(3) Any allowance deduction required under paragraph (d) of this section shall not affect the liability of the owners and operators of the NO_X Budget unit for any fine, penalty, or assessment, or their obligation to comply with any other remedy, for the same violation, as ordered under the CAA or applicable State law. The following guidelines will be followed in assessing fines, penalties or other obligations:

(i) For purposes of determining the number of days of violation, if a NO_X Budget unit has excess emissions for a control period, each day in the control period (153 days) constitutes a day in violation unless the owners and operators of the unit demonstrate that a lesser number of days should be considered.

(ii) Each ton of excess emissions is a separate violation.

(e) *Deductions for units sharing a common stack.* In the case of units sharing a common stack and having emissions that are not separately monitored or apportioned in accordance with subpart H of this part:

(1) The NO_X authorized account representative of the units may identify the percentage of NO_X allowances to be deducted from each such unit's compliance account to cover the unit's share of NO_X emissions from the common stack for a control period. Such identification shall be made in the compliance certification report submitted in accordance with § 96.30.

(2) Notwithstanding paragraph (b)(2)(i) of this section, the Administrator will deduct NO_X allowances for each such unit until the number of NO_X allowances deducted equals the unit's identified percentage (under paragraph (e)(1) of this section) of the number of tons of NO_X emissions, as determined in accordance with subpart H of this part, from the common stack for the control period for which compliance is being determined or, if no percentage is identified, an equal percentage for each such unit, plus the number of allowances required for deduction to account for actual utilization under § 96.42(e) for the control period.

(f) The Administrator will record in the appropriate compliance account or overdraft account all deductions from such an account pursuant to paragraphs (b), (d), or (e) of this section.

§ 96.55 Banking.

(a) NO_X allowances may be banked for future use or transfer in a compliance account, an overdraft account, or a general account, as follows:

(1) Any NO_X allowance that is held in a compliance account, an overdraft account, or a general account will remain in such account unless and until the NO_X allowance is deducted or transferred under § 96.31, § 96.54, § 96.56, subpart G of this part, or subpart I of this part.

(2) The Administrator will designate, as a ''banked'' NO_X allowance, any NO_X allowance that remains in a compliance account, an overdraft account, or a general account after the Administrator has made all deductions for a given control period from the compliance account or overdraft account pursuant to § 96.54.

(b) Each year starting in 2004, after the Administrator has completed the designation of banked NO_X allowances under paragraph (a)(2) of this section and before May 1 of the year, the Administrator will determine the extent to which banked NO_X allowances may be used for compliance in the control period for the current year, as follows:

(1) The Administrator will determine the total number of banked NO_X allowances held in compliance accounts, overdraft accounts, or general accounts.

(2) If the total number of banked NO_X allowances determined, under paragraph (b)(1) of this section, to be held in compliance accounts, overdraft accounts, or general accounts is less than or equal to 10% of the sum of the State trading program budgets for the control period for the States in which NO_X Budget units are located, any banked NO_X allowance may be deducted for compliance in accordance with §96.54.

(3) If the total number of banked NO_X allowances determined, under paragraph (b)(1) of this section, to be held in compliance accounts, overdraft accounts, or general accounts exceeds 10% of the sum of the State trading program budgets for the control period for the States in which NO_X Budget units are located, any banked allowance may be deducted for compliance in accordance with §96.54, except as follows:

(i) The Administrator will determine the following ratio: 0.10 multiplied by the sum of the State trading program budgets for the control period for the States in which NO_X Budget units are located and divided by the total number of banked NO_X allowances determined, under paragraph (b)(1) of this section, to be held in compliance accounts, overdraft accounts, or general accounts.

(ii) The Administrator will multiply the number of banked NO_X allowances in each compliance account or overdraft account. The resulting product is the number of banked NO_X allowances in the account that may be deducted for compliance in accordance with §96.54. Any banked NO_X allowances in excess of the resulting product may be deducted for compliance in accordance with §96.54, except that, if such NO_X allowances are used to make a deduction, two such NO_X allowances must be deducted for each deduction of one NO_X allowance required under §96.54.

(c) Any NO_X Budget unit may reduce its NO_X emission rate in the 2001 or 2002 control period, the owner or operator of the unit may request early reduction credits, and the permitting authority may allocate NO_X allowances in 2003 to the unit in accordance with the following requirements.

(1) Each NO_X Budget unit for which the owner or operator requests any early reduction credits under paragraph (c)(4) of this section shall monitor NO_X emissions in accordance with subpart H of this part starting in the 2000 control period and for each control period for which such early reduction credits are requested. The unit's monitoring system availability shall be not less than 90 percent during the 2000 control period, and the unit must be in compliance with any applicable State or Federal emissions or emissions-related requirements.

(2) NO_X emission rate and heat input under paragraphs (c)(3) through (5) of this section shall be determined in accordance with subpart H of this part.

(3) Each NO_X Budget unit for which the owner or operator requests any early reduction credits under paragraph (c)(4) of this section shall reduce its NO_X emission rate, for each control period for which early reduction credits are requested, to less than both 0.25 lb/mmBtu and 80 percent of the unit's NO_X emission rate in the 2000 control period.

(4) The NO_X authorized account representative of a NO_X Budget unit that meets the requirements of paragraphs (c)(1)and (3) of this section may submit to the permitting authority a request for early reduction credits for the unit based on NO_X emission rate reductions made by the unit in the control period for 2001 or 2002 in accordance with paragraph (c)(3) of this section.

(i) In the early reduction credit request, the NO_X authorized account may request early reduction credits for such control period in an amount equal to the unit's heat input for such control period multiplied by the difference between 0.25 lb/mmBtu and the unit's NO_X emission rate for such control period, divided by 2000 lb/ton, and rounded to the nearest ton.

(ii) The early reduction credit request must be submitted, in a format specified by the permitting authority, by October 31 of the year in which the NO_X emission rate reductions on which the request is based are made or such later date approved by the permitting authority.

(5) The permitting authority will allocate NO_X allowances, to NO_X Budget units meeting the requirements of paragraphs (c)(1) and (3) of this section

and covered by early reduction requests meeting the requirements of paragraph (c)(4)(ii) of this section, in accordance with the following procedures:

(i) Upon receipt of each early reduction credit request, the permitting authority will accept the request only if the requirements of paragraphs (c)(1), (c)(3), and (c)(4)(ii) of this section are met and, if the request is accepted, will make any necessary adjustments to the request to ensure that the amount of the early reduction credits requested meets the requirement of paragraphs (c)(2) and (4) of this section.

(ii) If the State's compliance supplement pool has an amount of NO_X allowances not less than the number of early reduction credits in all accepted early reduction credit requests for 2001 and 2002 (as adjusted under paragraph (c)(5)(i) of this section), the permitting authority will allocate to each NO_X Budget unit covered by such accepted requests one allowance for each early reduction credit requested (as adjusted under paragraph (c)(5)(i) of this section).

(iii) If the State's compliance supplement pool has a smaller amount of NO_X allowances than the number of early reduction credits in all accepted early reduction credit requests for 2001 and 2002 (as adjusted under paragraph (c)(5)(i) of this section), the permitting authority will allocate NO_X allowances to each NO_X Budget unit covered by such accepted requests according to the following formula:

Unit's allocated early reduction credits = [(Unit's adjusted early reduction credits) / (Total adjusted early reduction credits requested by all units)]×(Available NO_X allowances from the State's compliance supplement pool)

where:

''Unit's adjusted early reduction credits'' is the number of early reduction credits for the unit for 2001 and 2002 in accepted early reduction credit requests, as adjusted under paragraph (c)(5)(i) of this section.

''Total adjusted early reduction credits requested by all units'' is the number of early reduction credits for all units for 2001 and 2002 in accepted early reduction credit requests, as adjusted under paragraph (c)(5)(i) of this section.

''Available NO_X allowances from the State's compliance supplement pool'' is the number of NO_X allowances in the State's compliance supplement pool and available for early reduction credits for 2001 and 2002.

(6) By May 1, 2003, the permitting authority will submit to the Administrator the allocations of NO_X allowances determined under paragraph (c)(5) of this section. The Administrator will record such allocations to the extent that they are consistent with the requirements of paragraphs (c)(1) through (5) of this section.

(7) NO_X allowances recorded under paragraph (c)(6) of this section may be deducted for compliance under § 96.54 for the control periods in 2003 or 2004. Notwithstanding paragraph (a) of this section, the Administrator will deduct as retired any NO_X allowance that is recorded under paragraph (c)(6) of this section and is not deducted for compliance in accordance with § 96.54 for the control period in 2003 or 2004.

(8) NO_X allowances recorded under paragraph (c)(6) of this section are treated as banked allowances in 2004 for the purposes of paragraphs (a) and (b) of this section.

§ 96.56 Account error.

The Administrator may, at his or her sole discretion and on his or her own motion, correct any error in any NO_X Allowance Tracking System account. Within 10 business days of making such correction, the Administrator will notify the NO_X authorized account representative for the account.

§ 96.57 Closing of general accounts.

(a) The NO_X authorized account representative of a general account may instruct the Administrator to close the account by submitting a statement requesting deletion of the account from the NO_X Allowance Tracking System and by correctly submitting for recordation under § 96.60 an allowance transfer of all NO_X allowances in the account to one or more other NO_X Allowance Tracking System accounts.

(b) If a general account shows no activity for a period of a year or more and does not contain any NO_X allowances, the Administrator may notify the NO_X authorized account representative for the account that the account

will be closed and deleted from the NO_X Allowance Tracking System following 20 business days after the notice is sent. The account will be closed after the 20-day period unless before the end of the 20-day period the Administrator receives a correctly submitted transfer of NO_X allowances into the account under §96.60 or a statement submitted by the NO_X authorized account representative demonstrating to the satisfaction of the Administrator good cause as to why the account should not be closed.

Subpart G—NO_X Allowance Transfers

§96.60 Submission of NO_X allowance transfers.

The NO_X authorized account representatives seeking recordation of a NO_X allowance transfer shall submit the transfer to the Administrator. To be considered correctly submitted, the NO_X allowance transfer shall include the following elements in a format specified by the Administrator:

(a) The numbers identifying both the transferor and transferee accounts;

(b) A specification by serial number of each NO_X allowance to be transferred; and

(c) The printed name and signature of the NO_X authorized account representative of the transferor account and the date signed.

§96.61 EPA recordation.

(a) Within 5 business days of receiving a NO_X allowance transfer, except as provided in paragraph (b) of this section, the Administrator will record a NO_X allowance transfer by moving each NO_X allowance from the transferor account to the transferee account as specified by the request, provided that:

(1) The transfer is correctly submitted under §96.60;

(2) The transferor account includes each NO_X allowance identified by serial number in the transfer; and

(3) The transfer meets all other requirements of this part.

(b) A NO_X allowance transfer that is submitted for recordation following the NO_X allowance transfer deadline and that includes any NO_X allowances allocated for a control period prior to or the same as the control period to which the NO_X allowance transfer deadline applies will not be recorded until after completion of the process of recordation of NO_X allowance allocations in §96.53(b).

(c) Where a NO_X allowance transfer submitted for recordation fails to meet the requirements of paragraph (a) of this section, the Administrator will not record such transfer.

§96.62 Notification.

(a) *Notification of recordation.* Within 5 business days of recordation of a NO_X allowance transfer under §96.61, the Administrator will notify each party to the transfer. Notice will be given to the NO_X authorized account representatives of both the transferror and transferee accounts.

(b) *Notification of non-recordation.* Within 10 business days of receipt of a NO_X allowance transfer that fails to meet the requirements of §96.61(a), the Administrator will notify the NO_X authorized account representatives of both accounts subject to the transfer of:

(1) A decision not to record the transfer, and (2) The reasons for such non-recordation.

(c) Nothing in this section shall preclude the submission of a NO_X allowance transfer for recordation following notification of non-recordation.

Subpart H—Monitoring and Reporting

§96.70 General requirements.

The owners and operators, and to the extent applicable, the NO_X authorized account representative of a NO_X Budget unit, shall comply with the monitoring and reporting requirements as provided in this subpart and in subpart H of part 75 of this chapter. For purposes of complying with such requirements, the definitions in §96.2 and in §72.2 of this chapter shall apply, and the terms ''affected unit,'' ''designated representative,'' and ''continuous emission monitoring system'' (or ''CEMS'') in part 75 of this chapter shall be replaced by the terms ''NO_X Budget

unit,'' ''NO_X authorized account representative,'' and ''continuous emission monitoring system'' (or ''CEMS''), respectively, as defined in § 96.2.

(a) *Requirements for installation, certification, and data accounting.* The owner or operator of each NO_X Budget unit must meet the following requirements. These provisions also apply to a unit for which an application for a NO_X Budget opt-in permit is submitted and not denied or withdrawn, as provided in subpart I of this part:

(1) Install all monitoring systems required under this subpart for monitoring NO_X mass. This includes all systems required to monitor NO_X emission rate, NO_X concentration, heat input, and flow, in accordance with §§ 75.72 and 75.76.

(2) Install all monitoring systems for monitoring heat input, if required under § 96.76 for developing NO_X allowance allocations.

(3) Successfully complete all certification tests required under § 96.71 and meet all other provisions of this subpart and part 75 of this chapter applicable to the monitoring systems under paragraphs (a)(1) and (2) of this section.

(4) Record, and report data from the monitoring systems under paragraphs (a)(1) and (2) of this section.

(b) *Compliance dates.* The owner or operator must meet the requirements of paragraphs (a)(1) through (a)(3) of this section on or before the following dates and must record and report data on and after the following dates:

(1) NO_X Budget units for which the owner or operator intends to apply for early reduction credits under § 96.55(d) must comply with the requirements of this subpart by May 1, 2000.

(2) Except for NO_X Budget units under paragraph (b)(1) of this section, NO_X Budget units under § 96.4 that commence operation before January 1, 2002, must comply with the requirements of this subpart by May 1, 2002.

(3) NO_X Budget units under § 96.4 that commence operation on or after January 1, 2002 and that report on an annual basis under § 96.74(d) must comply with the requirements of this subpart by the later of the following dates:

(i) May 1, 2002; or

(ii) The earlier of:

(A) 180 days after the date on which the unit commences operation or, (B) For units under § 96.4(a)(1), 90 days after the date on which the unit commences commercial operation.

(4) NO_X Budget units under § 96.4 that commence operation on or after January 1, 2002 and that report on a control season basis under § 96.74(d) must comply with the requirements of this subpart by the later of the following dates:

(i) The earlier of:

(A) 180 days after the date on which the unit commences operation or,

(B) For units under § 96.4(a)(1), 90 days after the date on which the unit commences commercial operation.

(ii) However, if the applicable deadline under paragraph (b)(4)(i) section does not occur during a control period, May 1; immediately following the date determined in accordance with paragraph (b)(4)(i) of this section.

(5) For a NO_X Budget unit with a new stack or flue for which construction is completed after the applicable deadline under paragraph (b)(1), (b)(2) or (b)(3) of this section or subpart I of this part:

(i) 90 days after the date on which emissions first exit to the atmosphere through the new stack or flue;

(ii) However, if the unit reports on a control season basis under § 96.74(d) and the applicable deadline under paragraph (b)(5)(i) of this section does not occur during the control period, May 1 immediately following the applicable deadline in paragraph (b)(5)(i) of this section.

(6) For a unit for which an application for a NO_X Budget opt in permit is submitted and not denied or withdrawn, the compliance dates specified under subpart I of this part.

(c) *Reporting data prior to initial certification.* (1) The owner or operator of a NO_X Budget unit that misses the certification deadline under paragraph (b)(1) of this section is not eligible to apply for early reduction credits. The owner or operator of the unit becomes subject to the certification deadline under paragraph (b)(2) of this section.

(2) The owner or operator of a NO_X Budget under paragraphs (b)(3) or (b)(4) of this section must determine, record and report NO_X mass, heat input (if required for purposes of allocations) and any other values required to determine

NO_X Mass (e.g. NO_X emission rate and heat input or NO_X concentration and stack flow) using the provisions of §75.70(g) of this chapter, from the date and hour that the unit starts operating until all required certification tests are successfully completed.

(d) *Prohibitions.* (1) No owner or operator of a NO_X Budget unit or a non-NO_X Budget unit monitored under §75.72(b)(2)(ii) shall use any alternative monitoring system, alternative reference method, or any other alternative for the required continuous emission monitoring system without having obtained prior written approval in accordance with §96.75.

(2) No owner or operator of a NO_X Budget unit or a non-NO_X Budget unit monitored under §75.72(b)(2)(ii) shall operate the unit so as to discharge, or allow to be discharged, NO_X emissions to the atmosphere without accounting for all such emissions in accordance with the applicable provisions of this subpart and part 75 of this chapter except as provided for in §75.74 of this chapter.

(3) No owner or operator of a NO_X Budget unit or a non-NO_X Budget unit monitored under §75.72(b)(2)(ii) shall disrupt the continuous emission monitoring system, any portion thereof, or any other approved emission monitoring method, and thereby avoid monitoring and recording NO_X mass emissions discharged into the atmosphere, except for periods of recertification or periods when calibration, quality assurance testing, or maintenance is performed in accordance with the applicable provisions of this subpart and part 75 of this chapter except as provided for in §75.74 of this chapter.

(4) No owner or operator of a NO_X Budget unit or a non-NO_X Budget unit monitored under §75.72(b)(2)(ii) shall retire or permanently discontinue use of the continuous emission monitoring system, any component thereof, or any other approved emission monitoring system under this subpart, except under any one of the following circumstances:

(i) During the period that the unit is covered by a retired unit exemption under §96.5 that is in effect;

(ii) The owner or operator is monitoring emissions from the unit with another certified monitoring system approved, in accordance with the applicable provisions of this subpart and part 75 of this chapter, by the permitting authority for use at that unit that provides emission data for the same pollutant or parameter as the retired or discontinued monitoring system; or

(iii) The NO_X authorized account representative submits notification of the date of certification testing of a replacement monitoring system in accordance with §96.71(b)(2).

§96.71 Initial certification and recertification procedures

(a) The owner or operator of a NO_X Budget unit that is subject to an Acid Rain emissions limitation shall comply with the initial certification and recertification procedures of part 75 of this chapter, except that:

(1) If, prior to January 1, 1998, the Administrator approved a petition under §75.17(a) or (b) of this chapter for apportioning the NO_X emission rate measured in a common stack or a petition under §75.66 of this chapter for an alternative to a requirement in §75.17 of this chapter, the NO_X authorized account representative shall resubmit the petition to the Administrator under §96.75(a) to determine if the approval applies under the NO_X Budget Trading Program.

(2) For any additional CEMS required under the common stack provisions in §75.72 of this chapter, or for any NO_X concentration CEMS used under the provisions of §75.71(a)(2) of this chapter, the owner or operator shall meet the requirements of paragraph (b) of this section.

(b) The owner or operator of a NO_X Budget unit that is not subject to an Acid Rain emissions limitation shall comply with the following initial certification and recertification procedures, except that the owner or operator of a unit that qualifies to use the low mass emissions excepted monitoring methodology under §75.19 shall also meet the requirements of paragraph (c) of this section and the owner or operator of a unit that qualifies to use an alternative monitoring system under subpart E of part 75 of this chapter shall also meet the requirements of paragraph (d) of this section. The

owner or operator of a NO_X Budget unit that is subject to an Acid Rain emissions limitation, but requires additional CEMS under the common stack provisions in § 75.72 of this chapter, or that uses a NO_X concentration CEMS under § 75.71(a)(2) of this chapter also shall comply with the following initial certification and recertification procedures.

(1) *Requirements for initial certification.* The owner or operator shall ensure that each monitoring system required by subpart H of part 75 of this chapter (which includes the automated data acquisition and handling system) successfully completes all of the initial certification testing required under § 75.20 of this chapter. The owner or operator shall ensure that all applicable certification tests are successfully completed by the deadlines specified in § 96.70(b). In addition, whenever the owner or operator installs a monitoring system in order to meet the requirements of this part in a location where no such monitoring system was previously installed, initial certification according to § 75.20 is required.

(2) *Requirements for recertification.* Whenever the owner or operator makes a replacement, modification, or change in a certified monitoring system that the Administrator or the permitting authority determines significantly affects the ability of the system to accurately measure or record NO_X mass emissions or heat input or to meet the requirements of § 75.21 of this chapter or appendix B to part 75 of this chapter, the owner or operator shall recertify the monitoring system according to § 75.20(b) of this chapter. Furthermore, whenever the owner or operator makes a replacement, modification, or change to the flue gas handling system or the unit's operation that the Administrator or the permitting authority determines to significantly change the flow or concentration profile, the owner or operator shall recertify the continuous emissions monitoring system according to § 75.20(b) of this chapter. Examples of changes which require recertification include: replacement of the analyzer, change in location or orientation of the sampling probe or site, or changing of flow rate monitor polynomial coefficients.

(3) *Certification approval process for initial certifications and recertification.* (i) *Notification of certification.* The NO_X authorized account representative shall submit to the permitting authority, the appropriate EPA Regional Office and the permitting authority a written notice of the dates of certification in accordance with § 96.73.

(ii) *Certification application.* The NO_X authorized account representative shall submit to the permitting authority a certification application for each monitoring system required under subpart H of part 75 of this chapter. A complete certification application shall include the information specified in subpart H of part 75 of this chapter.

(iii) Except for units using the low mass emission excepted methodology under § 75.19 of this chapter, the provisional certification date for a monitor shall be determined using the procedures set forth in § 75.20(a)(3) of this chapter. A provisionally certified monitor may be used under the NO_X Budget Trading Program for a period not to exceed 120 days after receipt by the permitting authority of the complete certification application for the monitoring system or component thereof under paragraph (b)(3)(ii) of this section. Data measured and recorded by the provisionally certified monitoring system or component thereof, in accordance with the requirements of part 75 of this chapter, will be considered valid quality-assured data (retroactive to the date and time of provisional certification), provided that the permitting authority does not invalidate the provisional certification by issuing a notice of disapproval within 120 days of receipt of the complete certification application by the permitting authority.

(iv) *Certification application formal approval process.* The permitting authority will issue a written notice of approval or disapproval of the certification application to the owner or operator within 120 days of receipt of the complete certification application under paragraph (b)(3)(ii) of this section. In the event the permitting authority does not issue such a notice within such 120-day period, each monitoring system which meets the applicable performance requirements of part

75 of this chapter and is included in the certification application will be deemed certified for use under the NO_X Budget Trading Program.

(A) *Approval notice.* If the certification application is complete and shows that each monitoring system meets the applicable performance requirements of part 75 of this chapter, then the permitting authority will issue a written notice of approval of the certification application within 120 days of receipt.

(B) *Incomplete application notice.* A certification application will be considered complete when all of the applicable information required to be submitted under paragraph (b)(3)(ii) of this section has been received by the permitting authority. If the certification application is not complete, then the permitting authority will issue a written notice of incompleteness that sets a reasonable date by which the NO_X authorized account representative must submit the additional information required to complete the certification application. If the NO_X authorized account representative does not comply with the notice of incompleteness by the specified date, then the permitting authority may issue a notice of disapproval under paragraph (b)(3)(iv)(C) of this section.

(C) *Disapproval notice.* If the certification application shows that any monitoring system or component thereof does not meet the performance requirements of this part, or if the certification application is incomplete and the requirement for disapproval under paragraph (b)(3)(iv)(B) of this section has been met, the permitting authority will issue a written notice of disapproval of the certification application. Upon issuance of such notice of disapproval, the provisional certification is invalidated by the permitting authority and the data measured and recorded by each uncertified monitoring system or component thereof shall not be considered valid quality-assured data beginning with the date and hour of provisional certification. The owner or operator shall follow the procedures for loss of certification in paragraph (b)(3)(v) of this section for each monitoring system or component thereof which is disapproved for initial certification.

(D) *Audit decertification.* The permitting authority may issue a notice of disapproval of the certification status of a monitor in accordance with §96.72(b).

(v) *Procedures for loss of certification.* If the permitting authority issues a notice of disapproval of a certification application under paragraph (b)(3)(iv)(C) of this section or a notice of disapproval of certification status under paragraph (b)(3)(iv)(D) of this section, then:

(A) The owner or operator shall substitute the following values, for each hour of unit operation during the period of invalid data beginning with the date and hour of provisional certification and continuing until the time, date, and hour specified under §75.20(a)(5)(i) of this chapter:

(*1*) For units using or intending to monitor for NO_X emission rate and heat input or for units using the low mass emission excepted methodology under §75.19 of this chapter, the maximum potential NO_X emission rate and the maximum potential hourly heat input of the unit.

(*2*) For units intending to monitor for NO_X mass emissions using a NO_X pollutant concentration monitor and a flow monitor, the maximum potential concentration of NO_X and the maximum potential flow rate of the unit under section 2.1 of appendix A of part 75 of this chapter;

(B) The NO_X authorized account representative shall submit a notification of certification retest dates and a new certification application in accordance with paragraphs (b)(3)(i) and (ii) of this section; and

(C) The owner or operator shall repeat all certification tests or other requirements that were failed by the monitoring system, as indicated in the permitting authority's notice of disapproval, no later than 30 unit operating days after the date of issuance of the notice of disapproval.

(c) *Initial certification and recertification procedures for low mass emission units using the excepted methodologies under §75.19 of this chapter.* The owner or operator of a gas-fired or oil-fired

unit using the low mass emissions excepted methodology under § 75.19 of this chapter shall meet the applicable general operating requirements of § 75.10 of this chapter, the applicable requirements of § 75.19 of this chapter, and the applicable certification requirements of § 96.71 of this chapter, except that the excepted methodology shall be deemed provisionally certified for use under the NO_X Budget Trading Program, as of the following dates:

(1) For units that are reporting on an annual basis under § 96.74(d);

(i) For a unit that has commences operation before its compliance deadline under § 96.71(b), from January 1 of the year following submission of the certification application for approval to use the low mass emissions excepted methodology under § 75.19 of this chapter until the completion of the period for the permitting authority review; or

(ii) For a unit that commences operation after its compliance deadline under § 96.71(b), the date of submission of the certification application for approval to use the low mass emissions excepted methodology under § 75.19 of this chapter until the completion of the period for permitting authority review, or

(2) For units that are reporting on a control period basis under § 96.74(b)(3)(ii) of this part:

(i) For a unit that commenced operation before its compliance deadline under § 96.71(b), where the certification application is submitted before May 1, from May 1 of the year of the submission of the certification application for approval to use the low mass emissions excepted methodology under § 75.19 of this chapter until the completion of the period for the permitting authority review; or

(ii) For a unit that commenced operation before its compliance deadline under § 96.71(b), where the certification application is submitted after May 1, from May 1 of the year following submission of the certification application for approval to use the low mass emissions excepted methodology under § 75.19 of this chapter until the completion of the period for the permitting authority review; or

(iii) For a unit that commences operation after its compliance deadline under § 96.71(b), where the unit commences operation before May 1, from May 1 of the year that the unit commenced operation, until the completion of the period for the permitting authority's review.

(iv) For a unit that has not operated after its compliance deadline under § 96.71(b), where the certification application is submitted after May 1, but before October 1st, from the date of submission of a certification application for approval to use the low mass emissions excepted methodology under § 75.19 of this chapter until the completion of the period for the permitting authority's review.

(d) *Certification/recertification procedures for alternative monitoring systems.* The NO_X authorized account representative representing the owner or operator of each unit applying to monitor using an alternative monitoring system approved by the Administrator and, if applicable, the permitting authority under subpart E of part 75 of this chapter shall apply for certification to the permitting authority prior to use of the system under the NO_X Trading Program. The NO_X authorized account representative shall apply for recertification following a replacement, modification or change according to the procedures in paragraph (b) of this section. The owner or operator of an alternative monitoring system shall comply with the notification and application requirements for certification according to the procedures specified in paragraph (b)(3) of this section and § 75.20(f) of this chapter .

§ 96.72 Out of control periods.

(a) Whenever any monitoring system fails to meet the quality assurance requirements of appendix B of part 75 of this chapter, data shall be substituted using the applicable procedures in subpart D, appendix D, or appendix E of part 75 of this chapter.

(b) *Audit decertification.* Whenever both an audit of a monitoring system and a review of the initial certification or recertification application reveal that any system or component should not have been certified or recertified because it did not meet a particular

performance specification or other requirement under §96.71 or the applicable provisions of part 75 of this chapter, both at the time of the initial certification or recertification application submission and at the time of the audit, the permitting authority will issue a notice of disapproval of the certification status of such system or component. For the purposes of this paragraph, an audit shall be either a field audit or an audit of any information submitted to the permitting authority or the Administrator. By issuing the notice of disapproval, the permitting authority revokes prospectively the certification status of the system or component. The data measured and recorded by the system or component shall not be considered valid quality-assured data from the date of issuance of the notification of the revoked certification status until the date and time that the owner or operator completes subsequently approved initial certification or recertification tests. The owner or operator shall follow the initial certification or recertification procedures in §96.71 for each disapproved system.

§96.73 Notifications.

The NO_X authorized account representative for a NO_X Budget unit shall submit written notice to the permitting authority and the Administrator in accordance with §75.61 of this chapter, except that if the unit is not subject to an Acid Rain emissions limitation, the notification is only required to be sent to the permitting authority.

§96.74 Recordkeeping and reporting.

(a) *General provisions.* (1) The NO_X authorized account representative shall comply with all recordkeeping and reporting requirements in this section and with the requirements of §96.10(e).

(2) If the NO_X authorized account representative for a NO_X Budget unit subject to an Acid Rain Emission limitation who signed and certified any submission that is made under subpart F or G of part 75 of this chapter and which includes data and information required under this subpart or subpart H of part 75 of this chapter is not the same person as the designated representative or the alternative designated representative for the unit under part 72 of this chapter, the submission must also be signed by the designated representative or the alternative designated representative.

(b) *Monitoring plans.* (1) The owner or operator of a unit subject to an Acid Rain emissions limitation shall comply with requirements of §75.62 of this chapter, except that the monitoring plan shall also include all of the information required by subpart H of part 75 of this chapter.

(2) The owner or operator of a unit that is not subject to an Acid Rain emissions limitation shall comply with requirements of §75.62 of this chapter, except that the monitoring plan is only required to include the information required by subpart H of part 75 of this chapter.

(c) *Certification applications.* The NO_X authorized account representative shall submit an application to the permitting authority within 45 days after completing all initial certification or recertification tests required under §96.71 including the information required under subpart H of part 75 of this chapter.

(d) *Quarterly reports.* The NO_X authorized account representative shall submit quarterly reports, as follows:

(1) If a unit is subject to an Acid Rain emission limitation or if the owner or operator of the NO_X budget unit chooses to meet the annual reporting requirements of this subpart H, the NO_X authorized account representative shall submit a quarterly report for each calendar quarter beginning with:

(i) For units that elect to comply with the early reduction credit provisions under §96.55 of this part, the calender quarter that includes the date of initial provisional certification under §96.71(b)(3)(iii). Data shall be reported from the date and hour corresponding to the date and hour of provisional certification; or

(ii) For units commencing operation prior to May 1, 2002 that are not required to certify monitors by May 1, 2000 under §96.70(b)(1), the earlier of the calender quarter that includes the date of initial provisional certification under §96.71(b)(3)(iii) or, if the certification tests are not completed by May 1, 2002, the partial calender quarter

from May 1, 2002 through June 30, 2002. Data shall be recorded and reported from the earlier of the date and hour corresponding to the date and hour of provisional certification or the first hour on May 1, 2002; or

(iii) For a unit that commences operation after May 1, 2002, the calendar quarter in which the unit commences operation, Data shall be reported from the date and hour corresponding to when the unit commenced operation.

(2) If a NO_X budget unit is not subject to an Acid Rain emission limitation, then the NO_X authorized account representative shall either:

(i) Meet all of the requirements of part 75 related to monitoring and reporting NO_X mass emissions during the entire year and meet the reporting deadlines specified in paragraph (d)(1) of this section; or

(ii) Submit quarterly reports only for the periods from the earlier of May 1 or the date and hour that the owner or operator successfully completes all of the recertification tests required under § 75.74(d)(3) through September 30 of each year in accordance with the provisions of § 75.74(b) of this chapter. The NO_X authorized account representative shall submit a quarterly report for each calendar quarter, beginning with:

(*A*) For units that elect to comply with the early reduction credit provisions under § 96.55, the calender quarter that includes the date of initial provisional certification under § 96.71(b)(3)(iii). Data shall be reported from the date and hour corresponding to the date and hour of provisional certification; or

(*B*) For units commencing operation prior to May 1, 2002 that are not required to certify monitors by May 1, 2000 under § 96.70(b)(1), the earlier of the calender quarter that includes the date of initial provisional certification under § 96.71(b)(3)(iii), or if the certification tests are not completed by May 1, 2002, the partial calender quarter from May 1, 2002 through June 30, 2002. Data shall be reported from the earlier of the date and hour corresponding to the date and hour of provisional certification or the first hour of May 1, 2002; or

(*C*) For units that commence operation after May 1, 2002 during the control period, the calender quarter in which the unit commences operation. Data shall be reported from the date and hour corresponding to when the unit commenced operation; or

(*D*) For units that commence operation after May 1, 2002 and before May 1 of the year in which the unit commences operation, the earlier of the calender quarter that includes the date of initial provisional certification under § 96.71(b)(3)(iii) or, if the certification tests are not completed by May 1 of the year in which the unit commences operation, May 1 of the year in which the unit commences operation. Data shall be reported from the earlier of the date and hour corresponding to the date and hour of provisional certification or the first hour of May 1 of the year after the unit commences operation.

(*E*) For units that commence operation after May 1, 2002 and after September 30 of the year in which the unit commences operation, the earlier of the calender quarter that includes the date of initial provisional certification under § 96.71(b)(3)(iii) or, if the certification tests are not completed by May 1 of the year after the unit commences operation, May 1 of the year after the unit commences operation. Data shall be reported from the earlier of the date and hour corresponding to the date and hour of provisional certification or the first hour of May 1 of the year after the unit commences operation.

(3) The NO_X authorized account representative shall submit each quarterly report to the Administrator within 30 days following the end of the calendar quarter covered by the report. Quarterly reports shall be submitted in the manner specified in subpart H of part 75 of this chapter and § 75.64 of this chapter.

(i) For units subject to an Acid Rain Emissions limitation, quarterly reports shall include all of the data and information required in subpart H of part 75 of this chapter for each NO_X Budget unit (or group of units using a common stack) as well as information required in subpart G of part 75 of this chapter.

(ii) For units not subject to an Acid Rain Emissions limitation, quarterly reports are only required to include all of the data and information required in

subpart H of part 75 of this chapter for each NO_X Budget unit (or group of units using a common stack).

(4) *Compliance certification.* The NO_X authorized account representative shall submit to the Administrator a compliance certification in support of each quarterly report based on reasonable inquiry of those persons with primary responsibility for ensuring that all of the unit's emissions are correctly and fully monitored. The certification shall state that:

(i) The monitoring data submitted were recorded in accordance with the applicable requirements of this subpart and part 75 of this chapter, including the quality assurance procedures and specifications; and

(ii) For a unit with add-on NO_X emission controls and for all hours where data are substituted in accordance with §75.34(a)(1) of this chapter, the add-on emission controls were operating within the range of parameters listed in the monitoring plan and the substitute values do not systematically underestimate NO_X emissions; and

(iii) For a unit that is reporting on a control period basis under §96.74(d) the NO_X emission rate and NO_X concentration values substituted for missing data under subpart D of part 75 of this chapter are calculated using only values from a control period and do not systematically underestimate NO_X emissions.

§96.75 Petitions.

(a) The NO_X authorized account representative of a NO_X Budget unit that is subject to an Acid Rain emissions limitation may submit a petition under §75.66 of this chapter to the Administrator requesting approval to apply an alternative to any requirement of this subpart.

(1) Application of an alternative to any requirement of this subpart is in accordance with this subpart only to the extent that the petition is approved by the Administrator, in consultation with the permitting authority.

(2) Notwithstanding paragraph (a)(1) of this section, if the petition requests approval to apply an alternative to a requirement concerning any additional CEMS required under the common stack provisions of §75.72 of this chapter, the petition is governed by paragraph (b) of this section.

(b) The NO_X authorized account representative of a NO_X Budget unit that is not subject to an Acid Rain emissions limitation may submit a petition under §75.66 of this chapter to the permitting authority and the Administrator requesting approval to apply an alternative to any requirement of this subpart.

(1) The NO_X authorized account representative of a NO_X Budget unit that is subject to an Acid Rain emissions limitation may submit a petition under §75.66 of this chapter to the permitting authority and the Administrator requesting approval to apply an alternative to a requirement concerning any additional CEMS required under the common stack provisions of §75.72 of this chapter or a NO_X concentration CEMS used under 75.71(a)(2) of this chapter.

(2) Application of an alternative to any requirement of this subpart is in accordance with this subpart only to the extent the petition under paragraph (b) of this section is approved by both the permitting authority and the Administrator.

§96.76 Additional requirements to provide heat input data for allocations purposes.

(a) The owner or operator of a unit that elects to monitor and report NO_X Mass emissions using a NO_X concentration system and a flow system shall also monitor and report heat input at the unit level using the procedures set forth in part 75 of this chapter for any source located in a state developing source allocations based upon heat input.

(b) The owner or operator of a unit that monitor and report NO_X Mass emissions using a NO_X concentration system and a flow system shall also monitor and report heat input at the unit level using the procedures set forth in part 75 of this chapter for any source that is applying for early reduction credits under §96.55.

Subpart I—Individual Unit Opt-ins

§ 96.80 Applicability.

A unit that is in the State, is not a NO_X Budget unit under § 96.4, vents all of its emissions to a stack, and is operating, may qualify, under this subpart, to become a NO_X Budget opt-in source. A unit that is a NO_X Budget unit, is covered by a retired unit exemption under § 96.5 that is in effect, or is not operating is not eligible to become a NO_X Budget opt-in source.

§ 96.81 General.

Except otherwise as provided in this part, a NO_X Budget opt-in source shall be treated as a NO_X Budget unit for purposes of applying subparts A through H of this part.

§ 96.82 NO_X authorized account representative.

A unit for which an application for a NO_X Budget opt-in permit is submitted and not denied or withdrawn, or a NO_X Budget opt-in source, located at the same source as one or more NO_X Budget units, shall have the same NO_X authorized account representative as such NO_X Budget units.

§ 96.83 Applying for NO_X Budget opt-in permit.

(a) *Applying for initial NO_X* Budget opt-in permit. In order to apply for an initial NO_X Budget opt-in permit, the NO_X authorized account representative of a unit qualified under § 96.80 may submit to the permitting authority at any time, except as provided under § 96.86(g):

(1) A complete NO_X Budget permit application under § 96.22;

(2) A monitoring plan submitted in accordance with subpart H of this part; and

(3) A complete account certificate of representation under § 96.13, if no NO_X authorized account representative has been previously designated for the unit.

(b) *Duty to reapply*. The NO_X authorized account representative of a NO_X Budget opt-in source shall submit a complete NO_X Budget permit application under § 96.22 to renew the NO_X Budget opt-in permit in accordance with § 96.21(c) and, if applicable, an updated monitoring plan in accordance with subpart H of this part.

§ 96.84 Opt-in process.

The permitting authority will issue or deny a NO_X Budget opt-in permit for a unit for which an initial application for a NO_X Budget opt-in permit under § 96.83 is submitted, in accordance with § 96.20 and the following:

(a) *Interim review of monitoring plan*. The permitting authority will determine, on an interim basis, the sufficiency of the monitoring plan accompanying the initial application for a NO_X Budget opt-in permit under § 96.83. A monitoring plan is sufficient, for purposes of interim review, if the plan appears to contain information demonstrating that the NO_X emissions rate and heat input of the unit are monitored and reported in accordance with subpart H of this part. A determination of sufficiency shall not be construed as acceptance or approval of the unit's monitoring plan.

(b) If the permitting authority determines that the unit's monitoring plan is sufficient under paragraph (a) of this section and after completion of monitoring system certification under subpart H of this part, the NO_X emissions rate and the heat input of the unit shall be monitored and reported in accordance with subpart H of this part for one full control period during which monitoring system availability is not less than 90 percent and during which the unit is in full compliance with any applicable State or Federal emissions or emissions-related requirements. Solely for purposes of applying the requirements in the prior sentence, the unit shall be treated as a "NO_X Budget unit" prior to issuance of a NO_X Budget opt-in permit covering the unit.

(c) Based on the information monitored and reported under paragraph (b) of this section, the unit's baseline heat rate shall be calculated as the unit's total heat input (in mmBtu) for the control period and the unit's baseline NO_X emissions rate shall be calculated as the unit's total NO_X emissions (in lb) for the control period divided by the unit's baseline heat rate.

(d) After calculating the baseline heat input and the baseline NO_X emissions rate for the unit under paragraph

(c) of this section, the permitting authority will serve a draft NO_X Budget opt-in permit on the NO_X authorized account representative of the unit.

(e) *Confirmation of intention to opt-in.* Within 20 days after the issuance of the draft NO_X Budget opt-in permit, the NO_X authorized account representative of the unit must submit to the permitting authority a confirmation of the intention to opt in the unit or a withdrawal of the application for a NO_X Budget opt-in permit under § 96.83. The permitting authority will treat the failure to make a timely submission as a withdrawal of the NO_X Budget opt-in permit application.

(f) *Issuance of draft NO_X Budget opt-in permit.* If the NO_X authorized account representative confirms the intention to opt-in the unit under paragraph (e) of this section, the permitting authority will issue the draft NO_X Budget opt-in permit in accordance with § 96.20.

(g) Notwithstanding paragraphs (a) through (f) of this section, if at any time before issuance of a draft NO_X Budget opt-in permit for the unit, the permitting authority determines that the unit does not qualify as a NO_X Budget opt-in source under § 96.80, the permitting authority will issue a draft denial of a NO_X Budget opt-in permit for the unit in accordance with § 96.20.

(h) *Withdrawal of application for NO_X Budget opt-in permit.* A NO_X authorized account representative of a unit may withdraw its application for a NO_X Budget opt-in permit under § 96.83 at any time prior to the issuance of the final NO_X Budget opt-in permit. Once the application for a NO_X Budget opt-in permit is withdrawn, a NO_X authorized account representative wanting to reapply must submit a new application for a NO_X Budget permit under § 96.83.

(i) *Effective date.* The effective date of the initial NO_X Budget opt-in permit shall be May 1 of the first control period starting after the issuance of the initial NO_X Budget opt-in permit by the permitting authority. The unit shall be a NO_X Budget opt-in source and a NO_X Budget unit as of the effective date of the initial NO_X Budget opt-in permit.

§ 96.85 NO_X Budget opt-in permit contents.

(a) Each NO_X Budget opt-in permit (including any draft or proposed NO_X Budget opt-in permit, if applicable) will contain all elements required for a complete NO_X Budget opt-in permit application under § 96.22 as approved or adjusted by the permitting authority.

(b) Each NO_X Budget opt-in permit is deemed to incorporate automatically the definitions of terms under § 96.2 and, upon recordation by the Administrator under subpart F, G, or I of this part, every allocation, transfer, or deduction of NO_X allowances to or from the compliance accounts of each NO_X Budget opt-in source covered by the NO_X Budget opt-in permit or the overdraft account of the NO_X Budget source where the NO_X Budget opt-in source is located.

§ 96.86 Withdrawal from NO_X Budget Trading Program.

(a) *Requesting withdrawal.* To withdraw from the NO_X Budget Trading Program, the NO_X authorized account representative of a NO_X Budget opt-in source shall submit to the permitting authority a request to withdraw effective as of a specified date prior to May 1 or after September 30. The submission shall be made no later than 90 days prior to the requested effective date of withdrawal.

(b) *Conditions for withdrawal.* Before a NO_X Budget opt-in source covered by a request under paragraph (a) of this section may withdraw from the NO_X Budget Trading Program and the NO_X Budget opt-in permit may be terminated under paragraph (e) of this section, the following conditions must be met:

(1) For the control period immediately before the withdrawal is to be effective, the NO_X authorized account representative must submit or must have submitted to the permitting authority an annual compliance certification report in accordance with § 96.30.

(2) If the NO_X Budget opt-in source has excess emissions for the control period immediately before the withdrawal is to be effective, the Administrator will deduct or has deducted from the NO_X Budget opt-in source's compliance account, or the overdraft account of the NO_X Budget source where the

NO_X Budget opt-in source is located, the full amount required under § 96.54(d) for the control period.

(3) After the requirements for withdrawal under paragraphs (b)(1) and (2) of this section are met, the Administrator will deduct from the NO_X Budget opt-in source's compliance account, or the overdraft account of the NO_X Budget source where the NO_X Budget opt-in source is located, NO_X allowances equal in number to and allocated for the same or a prior control period as any NO_X allowances allocated to that source under § 96.88 for any control period for which the withdrawal is to be effective. The Administrator will close the NO_X Budget opt-in source's compliance account and will establish, and transfer any remaining allowances to, a new general account for the owners and operators of the NO_X Budget opt-in source. The NO_X authorized account representative for the NO_X Budget opt-in source shall become the NO_X authorized account representative for the general account.

(c) A NO_X Budget opt-in source that withdraws from the NO_X Budget Trading Program shall comply with all requirements under the NO_X Budget Trading Program concerning all years for which such NO_X Budget opt-in source was a NO_X Budget opt-in source, even if such requirements arise or must be complied with after the withdrawal takes effect.

(d) *Notification.* (1) After the requirements for withdrawal under paragraphs (a) and (b) of this section are met (including deduction of the full amount of NO_X allowances required), the permitting authority will issue a notification to the NO_X authorized account representative of the NO_X Budget opt-in source of the acceptance of the withdrawal of the NO_X Budget opt-in source as of a specified effective date that is after such requirements have been met and that is prior to May 1 or after September 30.

(2) If the requirements for withdrawal under paragraphs (a) and (b) of this section are not met, the permitting authority will issue a notification to the NO_X authorized account representative of the NO_X Budget opt-in source that the NO_X Budget opt-in source's request to withdraw is denied. If the NO_X Budget opt-in source's request to withdraw is denied, the NO_X Budget opt-in source shall remain subject to the requirements for a NO_X Budget opt-in source.

(e) *Permit amendment.* After the permitting authority issues a notification under paragraph (d)(1) of this section that the requirements for withdrawal have been met, the permitting authority will revise the NO_X Budget permit covering the NO_X Budget opt-in source to terminate the NO_X Budget opt-in permit as of the effective date specified under paragraph (d)(1) of this section. A NO_X Budget opt-in source shall continue to be a NO_X Budget opt-in source until the effective date of the termination.

(f) *Reapplication upon failure to meet conditions of withdrawal.* If the permitting authority denies the NO_X Budget opt-in source's request to withdraw, the NO_X authorized account representative may submit another request to withdraw in accordance with paragraphs (a) and (b) of this section.

(g) *Ability to return to the NO_X* Budget Trading Program. Once a NO_X Budget opt-in source withdraws from the NO_X Budget Trading Program and its NO_X Budget opt-in permit is terminated under this section, the NO_X authority account representative may not submit another application for a NO_X Budget opt-in permit under § 96.83 for the unit prior to the date that is 4 years after the date on which the terminated NO_X Budget opt-in permit became effective.

§ 96.87 Change in regulatory status.

(a) *Notification.* When a NO_X Budget opt-in source becomes a NO_X Budget unit under § 96.4, the NO_X authorized account representative shall notify in writing the permitting authority and the Administrator of such change in the NO_X Budget opt-in source's regulatory status, within 30 days of such change.

(b) *Permitting authority's and Administrator's action.* (1)(i) When the NO_X Budget opt-in source becomes a NO_X Budget unit under § 96.4, the permitting authority will revise the NO_X Budget opt-in source's NO_X Budget opt-in permit to meet the requirements of a NO_X Budget permit under § 96.23 as of an effective date that is the date on which

such NO_X Budget opt-in source becomes a NO_X Budget unit under §96.4.

(ii)(A) The Administrator will deduct from the compliance account for the NO_X Budget unit under paragraph (b)(1)(i) of this section, or the overdraft account of the NO_X Budget source where the unit is located, NO_X allowances equal in number to and allocated for the same or a prior control period as:

(*1*) Any NO_X allowances allocated to the NO_X Budget unit (as a NO_X Budget opt-in source) under §96.88 for any control period after the last control period during which the unit's NO_X Budget opt-in permit was effective; and

(*2*) If the effective date of the NO_X Budget permit revision under paragraph (b)(1)(i) of this section is during a control period, the NO_X allowances allocated to the NO_X Budget unit (as a NO_X Budget opt-in source) under §96.88 for the control period multiplied by the ratio of the number of days, in the control period, starting with the effective date of the permit revision under paragraph (b)(1)(i) of this section, divided by the total number of days in the control period.

(B) The NO_X authorized account representative shall ensure that the compliance account of the NO_X Budget unit under paragraph (b)(1)(i) of this section, or the overdraft account of the NO_X Budget source where the unit is located, includes the NO_X allowances necessary for completion of the deduction under paragraph (b)(1)(ii)(A) of this section. If the compliance account or overdraft account does not contain sufficient NO_X allowances, the Administrator will deduct the required number of NO_X allowances, regardless of the control period for which they were allocated, whenever NO_X allowances are recorded in either account.

(iii)(A) For every control period during which the NO_X Budget permit revised under paragraph (b)(1)(i) of this section is effective, the NO_X Budget unit under paragraph (b)(1)(i) of this section will be treated, solely for purposes of NO_X allowance allocations under §96.42, as a unit that commenced operation on the effective date of the NO_X Budget permit revision under paragraph (b)(1)(i) of this section and will be allocated NO_X allowances under §96.42.

(B) Notwithstanding paragraph (b)(1)(iii)(A) of this section, if the effective date of the NO_X Budget permit revision under paragraph (b)(1)(i) of this section is during a control period, the following number of NO_X allowances will be allocated to the NO_X Budget unit under paragraph (b)(1)(i) of this section under §96.42 for the control period: the number of NO_X allowances otherwise allocated to the NO_X Budget unit under §96.42 for the control period multiplied by the ratio of the number of days, in the control period, starting with the effective date of the permit revision under paragraph (b)(1)(i) of this section, divided by the total number of days in the control period.

(2)(i) When the NO_X authorized account representative of a NO_X Budget opt-in source does not renew its NO_X Budget opt-in permit under §96.83(b), the Administrator will deduct from the NO_X Budget opt-in unit's compliance account, or the overdraft account of the NO_X Budget source where the NO_X Budget opt-in source is located, NO_X allowances equal in number to and allocated for the same or a prior control period as any NO_X allowances allocated to the NO_X Budget opt-in source under §96.88 for any control period after the last control period for which the NO_X Budget opt-in permit is effective. The NO_X authorized account representative shall ensure that the NO_X Budget opt-in source's compliance account or the overdraft account of the NO_X Budget source where the NO_X Budget opt-in source is located includes the NO_X allowances necessary for completion of such deduction. If the compliance account or overdraft account does not contain sufficient NO_X allowances, the Administrator will deduct the required number of NO_X allowances, regardless of the control period for which they were allocated, whenever NO_X allowances are recorded in either account.

(ii) After the deduction under paragraph (b)(2)(i) of this section is completed, the Administrator will close the NO_X Budget opt-in source's compliance account. If any NO_X allowances remain

in the compliance account after completion of such deduction and any deduction under § 96.54, the Administrator will close the NO_X Budget opt-in source's compliance account and will establish, and transfer any remaining allowances to, a new general account for the owners and operators of the NO_X Budget opt-in source. The NO_X authorized account representative for the NO_X Budget opt-in source shall become the NO_X authorized account representative for the general account.

§ 96.88 NO_X allowance allocations to opt-in units.

(a) *NO_X allowance allocation.* (1) By December 31 immediately before the first control period for which the NO_X Budget opt-in permit is effective, the permitting authority will allocate NO_X allowances to the NO_X Budget opt-in source and submit to the Administrator the allocation for the control period in accordance with paragraph (b) of this section.

(2) By no later than December 31, after the first control period for which the NO_X Budget opt-in permit is in effect, and December 31 of each year thereafter, the permitting authority will allocate NO_X allowances to the NO_X Budget opt-in source, and submit to the Administrator allocations for the next control period, in accordance with paragraph (b) of this section.

(b) For each control period for which the NO_X Budget opt-in source has an approved NO_X Budget opt-in permit, the NO_X Budget opt-in source will be allocated NO_X allowances in accordance with the following procedures:

(1) The heat input (in mmBtu) used for calculating NO_X allowance allocations will be the lesser of:

(i) The NO_X Budget opt-in source's baseline heat input determined pursuant to § 96.84(c); or

(ii) The NO_X Budget opt-in source's heat input, as determined in accordance with subpart H of this part, for the control period in the year prior to the year of the control period for which the NO_X allocations are being calculated.

(2) The permitting authority will allocate NO_X allowances to the NO_X Budget opt-in source in an amount equaling the heat input (in mmBtu) determined under paragraph (b)(1) of this section multiplied by the lesser of:

(i) The NO_X Budget opt-in source's baseline NO_X emissions rate (in lb/mmBtu) determined pursuant to § 96.84(c); or

(ii) The most stringent State or Federal NO_X emissions limitation applicable to the NO_X Budget opt-in source during the control period.

Subpart J—Mobile and Area Sources [Reserved]

Subparts K—Z [Reserved]

Subpart AA—CAIR NO_X Annual Trading Program General Provisions

SOURCE: 70 FR 25339, May 12, 2005, unless otherwise noted.

§ 96.101 Purpose.

This subpart and subparts BB through II establish the model rule comprising general provisions and the designated representative, permitting, allowance, monitoring, and opt-in provisions for the State Clean Air Interstate Rule (CAIR) NO_X Annual Trading Program, under section 110 of the Clean Air Act and § 51.123 of this chapter, as a means of mitigating interstate transport of fine particulates and nitrogen oxides. The owner or operator of a unit or a source shall comply with the requirements of this subpart and subparts BB through II as a matter of federal law only if the State with jurisdiction over the unit and the source incorporates by reference such subparts or otherwise adopts the requirements of such subparts in accordance with § 51.123(o)(1) or (2) of this chapter, the State submits to the Administrator one or more revisions of the State implementation plan that include such adoption, and the Administrator approves such revisions. If the State adopts the requirements of such subparts in accordance with § 51.123(o)(1) or (2) of this chapter, then the State authorizes the Administrator to assist the State in implementing the CAIR NO_X Annual Trading Program by carrying out the functions set forth for the Administrator in such subparts.

§ 96.102 Definitions.

The terms used in this subpart and subparts BB through II shall have the meanings set forth in this section as follows:

Account number means the identification number given by the Administrator to each CAIR NO_X Allowance Tracking System account.

Acid Rain emissions limitation means a limitation on emissions of sulfur dioxide or nitrogen oxides under the Acid Rain Program.

Acid Rain Program means a multistate sulfur dioxide and nitrogen oxides air pollution control and emission reduction program established by the Administrator under title IV of the CAA and parts 72 through 78 of this chapter.

Administrator means the Administrator of the United States Environmental Protection Agency or the Administrator's duly authorized representative.

Allocate or *allocation* means, with regard to CAIR NO_X allowances, the determination by a permitting authority or the Administrator of the amount of such CAIR NO_X allowances to be initially credited to a CAIR NO_X unit, a new unit set-aside, or other entity.

Allowance transfer deadline means, for a control period, midnight of March 1 (if it is a business day), or midnight of the first business day thereafter (if March 1 is not a business day), immediately following the control period and is the deadline by which a CAIR NO_X allowance transfer must be submitted for recordation in a CAIR NO_X source's compliance account in order to be used to meet the source's CAIR NO_X emissions limitation for such control period in accordance with § 96.154.

Alternate CAIR designated representative means, for a CAIR NO_X source and each CAIR NO_X unit at the source, the natural person who is authorized by the owners and operators of the source and all such units at the source, in accordance with subparts BB and II of this part, to act on behalf of the CAIR designated representative in matters pertaining to the CAIR NO_X Annual Trading Program. If the CAIR NO_X source is also a CAIR SO_2 source, then this natural person shall be the same person as the alternate CAIR designated representative under the CAIR SO_2 Trading Program. If the CAIR NO_X source is also a CAIR NO_X Ozone Season source, then this natural person shall be the same person as the alternate CAIR designated representative under the CAIR NO_X Ozone Season Trading Program. If the CAIR NO_X source is also subject to the Acid Rain Program, then this natural person shall be the same person as the alternate designated representative under the Acid Rain Program. If the CAIR NO_X source is also subject to the Hg Budget Trading Program, then this natural person shall be the same person as the alternate Hg designated representative under the Hg Budget Trading Program.

Automated data acquisition and handling system or *DAHS* means that component of the continuous emission monitoring system, or other emissions monitoring system approved for use under subpart HH of this part, designed to interpret and convert individual output signals from pollutant concentration monitors, flow monitors, diluent gas monitors, and other component parts of the monitoring system to produce a continuous record of the measured parameters in the measurement units required by subpart HH of this part.

Biomass means—

(1) Any organic material grown for the purpose of being converted to energy;

(2) Any organic byproduct of agriculture that can be converted into energy; or

(3) Any material that can be converted into energy and is nonmerchantable for other purposes, that is segregated from other nonmerchantable material, and that is;

(i) A forest-related organic resource, including mill residues, precommercial thinnings, slash, brush, or byproduct from conversion of trees to merchantable material; or

(ii) A wood material, including pallets, crates, dunnage, manufacturing and construction materials (other than pressure-treated, chemically-treated, or painted wood products), and landscape or right-of-way tree trimmings.

Boiler means an enclosed fossil- or other-fuel-fired combustion device used to produce heat and to transfer heat to

recirculating water, steam, or other medium.

Bottoming-cycle cogeneration unit means a cogeneration unit in which the energy input to the unit is first used to produce useful thermal energy and at least some of the reject heat from the useful thermal energy application or process is then used for electricity production.

CAIR authorized account representative means, with regard to a general account, a responsible natural person who is authorized, in accordance with subparts BB, FF, and II of this part, to transfer and otherwise dispose of CAIR NO_X allowances held in the general account and, with regard to a compliance account, the CAIR designated representative of the source.

CAIR designated representative means, for a CAIR NO_X source and each CAIR NO_X unit at the source, the natural person who is authorized by the owners and operators of the source and all such units at the source, in accordance with subparts BB and II of this part, to represent and legally bind each owner and operator in matters pertaining to the CAIR NO_X Annual Trading Program. If the CAIR NO_X source is also a CAIR SO_2 source, then this natural person shall be the same person as the CAIR designated representative under the CAIR SO_2 Trading Program. If the CAIR NO_X source is also a CAIR NO_X Ozone Season source, then this natural person shall be the same person as the CAIR designated representative under the CAIR NO_X Ozone Season Trading Program. If the CAIR NO_X source is also subject to the Acid Rain Program, then this natural person shall be the same person as the designated representative under the Acid Rain Program. If the CAIR NO_X source is also subject to the Hg Budget Trading Program, then this natural person shall be the same person as the Hg designated representative under the Hg Budget Trading Program.

CAIR NO_X allowance means a limited authorization issued by a permitting authority or the Administrator under provisions of a State implementation plan that are approved under § 51.123(o)(1) or (2) or (p) of this chapter, or under subpart EE of part 97 or § 97.188 of this chapter, to emit one ton of nitrogen oxides during a control period of the specified calendar year for which the authorization is allocated or of any calendar year thereafter under the CAIR NO_X Program. An authorization to emit nitrogen oxides that is not issued under provisions of a State implementation plan that are approved under § 51.123(o)(1) or (2) or (p) of this chapter or subpart EE of part 97 or § 97.188 of this chapter shall not be a CAIR NO_X allowance.

CAIR NO_X allowance deduction or *deduct CAIR NO_X allowances* means the permanent withdrawal of CAIR NO_X allowances by the Administrator from a compliance account, *e.g.*, in order to account for a specified number of tons of total nitrogen oxides emissions from all CAIR NO_X units at a CAIR NO_X source for a control period, determined in accordance with subpart HH of this part, or to account for excess emissions.

CAIR NO_X Allowance Tracking System means the system by which the Administrator records allocations, deductions, and transfers of CAIR NO_X allowances under the CAIR NO_X Annual Trading Program. Such allowances will be allocated, held, deducted, or transferred only as whole allowances.

CAIR NO_X Allowance Tracking System account means an account in the CAIR NO_X Allowance Tracking System established by the Administrator for purposes of recording the allocation, holding, transferring, or deducting of CAIR NO_X allowances.

CAIR NO_X allowances held or *hold CAIR NO_X allowances* means the CAIR NO_X allowances recorded by the Administrator, or submitted to the Administrator for recordation, in accordance with subparts FF, GG, and II of this part, in a CAIR NO_X Allowance Tracking System account.

CAIR NO_X Annual Trading Program means a multi-state nitrogen oxides air pollution control and emission reduction program approved and administered by the Administrator in accordance with subparts AA through II of this part and § 51.123(o)(1) or (2) of this chapter or established by the Administrator in accordance with subparts AA through II of part 97 of this chapter and §§ 51.123(p) and 52.35 of this chapter, as

a means of mitigating interstate transport of fine particulates and nitrogen oxides.

CAIR NO_X emissions limitation means, for a CAIR NO_X source, the tonnage equivalent, in NO_X emissions in a control period, of the CAIR NO_X allowances available for deduction for the source under § 96.154(a) and (b) for the control period.

CAIR NO_X Ozone Season source means a source that is subject to the CAIR NO_X Ozone Season Trading Program.

CAIR NO_X Ozone Season Trading Program means a multi-state nitrogen oxides air pollution control and emission reduction program approved and administered by the Administrator in accordance with subparts AAAA through IIII of this part and § 51.123(aa)(1) or (2) (and (bb)(1)), (bb)(2), or (dd) of this chapter or established by the Administrator in accordance with subparts AAAA through IIII of part 97 of this chapter and §§ 51.123(ee) and 52.35 of this chapter, as a means of mitigating interstate transport of ozone and nitrogen oxides.

CAIR NO_X source means a source that includes one or more CAIR NO_X units.

CAIR NO_X unit means a unit that is subject to the CAIR NO_X Annual Trading Program under § 96.104 and, except for purposes of § 96.105 and subpart EE of this part, a CAIR NO_X opt-in unit under subpart II of this part.

CAIR permit means the legally binding and federally enforceable written document, or portion of such document, issued by the permitting authority under subpart CC of this part, including any permit revisions, specifying the CAIR NO_X Annual Trading Program requirements applicable to a CAIR NO_X source, to each CAIR NO_X unit at the source, and to the owners and operators and the CAIR designated representative of the source and each such unit.

CAIR SO_2 source means a source that is subject to the CAIR SO_2 Trading Program.

CAIR SO_2 Trading Program means a multi-state sulfur dioxide air pollution control and emission reduction program approved and administered by the Administrator in accordance with subparts AAA through III of this part and § 51.124(o)(1) or (2) of this chapter or established by the Administrator in accordance with subparts AAA through III of part 97 of this chapter and §§ 51.124(r) and 52.36 of this chapter, as a means of mitigating interstate transport of fine particulates and sulfur dioxide.

Clean Air Act or *CAA* means the Clean Air Act, 42 U.S.C. 7401, *et seq*.

Coal means any solid fuel classified as anthracite, bituminous, subbituminous, or lignite.

Coal-derived fuel means any fuel (whether in a solid, liquid, or gaseous state) produced by the mechanical, thermal, or chemical processing of coal.

Coal-fired means:

(1) Except for purposes of subpart EE of this part, combusting any amount of coal or coal-derived fuel, alone or in combination with any amount of any other fuel, during any year; or

(2) For purposes of subpart EE of this part, combusting any amount of coal or coal-derived fuel, alone or in combination with any amount of any other fuel, during a specified year.

Cogeneration unit means a stationary, fossil-fuel-fired boiler or stationary, fossil-fuel-fired combustion turbine:

(1) Having equipment used to produce electricity and useful thermal energy for industrial, commercial, heating, or cooling purposes through the sequential use of energy; and

(2) Producing during the 12-month period starting on the date the unit first produces electricity and during any calendar year after the calendar year in which the unit first produces electricity—

(i) For a topping-cycle cogeneration unit,

(A) Useful thermal energy not less than 5 percent of total energy output; and

(B) Useful power that, when added to one-half of useful thermal energy produced, is not less then 42.5 percent of total energy input, if useful thermal energy produced is 15 percent or more of total energy output, or not less than 45 percent of total energy input, if useful thermal energy produced is less than 15 percent of total energy output.

(ii) For a bottoming-cycle cogeneration unit, useful power not less than 45 percent of total energy input;

(3) Provided that the total energy input under paragraphs (2)(i)(B) and (2)(ii) of this definition shall equal the unit's total energy input from all fuel except biomass if the unit is a boiler.

Combustion turbine means:

(1) An enclosed device comprising a compressor, a combustor, and a turbine and in which the flue gas resulting from the combustion of fuel in the combustor passes through the turbine, rotating the turbine; and

(2) If the enclosed device under paragraph (1) of this definition is combined cycle, any associated duct burner, heat recovery steam generator, and steam turbine.

Commence commercial operation means, with regard to a unit:

(1) To have begun to produce steam, gas, or other heated medium used to generate electricity for sale or use, including test generation, except as provided in § 96.105 and § 96.184(h).

(i) For a unit that is a CAIR NO_X unit under § 96.104 on the later of November 15, 1990 or the date the unit commences commercial operation as defined in paragraph (1) of this definition and that subsequently undergoes a physical change (other than replacement of the unit by a unit at the same source), such date shall remain the date of commencement of commercial operation of the unit, which shall continue to be treated as the same unit.

(ii) For a unit that is a CAIR NO_X unit under § 96.104 on the later of November 15, 1990 or the date the unit commences commercial operation as defined in paragraph (1) of this definition and that is subsequently replaced by a unit at the same source (*e.g.*, repowered), such date shall remain the replaced unit's date of commencement of commercial operation, and the replacement unit shall be treated as a separate unit with a separate date for commencement of commercial operation as defined in paragraph (1) or (2) of this definition as appropriate.

(2) Notwithstanding paragraph (1) of this definition and except as provided in § 96.105, for a unit that is not a CAIR NO_X unit under § 96.104 on the later of November 15, 1990 or the date the unit commences commercial operation as defined in paragraph (1) of this definition, the unit's date for commencement of commercial operation shall be the date on which the unit becomes a CAIR NO_X unit under § 96.104.

(i) For a unit with a date for commencement of commercial operation as defined in paragraph (2) of this definition and that subsequently undergoes a physical change (other than replacement of the unit by a unit at the same source), such date shall remain the date of commencement of commercial operation of the unit, which shall continue to be treated as the same unit.

(ii) For a unit with a date for commencement of commercial operation as defined in paragraph (2) of this definition and that is subsequently replaced by a unit at the same source (*e.g.*, repowered), such date shall remain the replaced unit's date of commencement of commercial operation, and the replacement unit shall be treated as a separate unit with a separate date for commencement of commercial operation as defined in paragraph (1) or (2) of this definition as appropriate.

Commence operation means:

(1) To have begun any mechanical, chemical, or electronic process, including, with regard to a unit, start-up of a unit's combustion chamber, except as provided in § 96.184(h).

(2) For a unit that undergoes a physical change (other than replacement of the unit by a unit at the same source) after the date the unit commences operation as defined in paragraph (1) of this definition, such date shall remain the date of commencement of operation of the unit, which shall continue to be treated as the same unit.

(3) For a unit that is replaced by a unit at the same source (*e.g.*, repowered) after the date the unit commences operation as defined in paragraph (1) of this definition, such date shall remain the replaced unit's date of commencement of operation, and the replacement unit shall be treated as a separate unit with a separate date for commencement of operation as defined in paragraph (1), (2), or (3) of this definition as appropriate, except as provided in § 96.184(h).

Compliance account means a CAIR NO_X Allowance Tracking System account, established by the Administrator for a CAIR NO_X source under subpart FF or II of this part, in which

any CAIR NO_X allowance allocations for the CAIR NO_X units at the source are initially recorded and in which are held any CAIR NO_X allowances available for use for a control period in order to meet the source's CAIR NO_X emissions limitation in accordance with § 96.154.

Continuous emission monitoring system or *CEMS* means the equipment required under subpart HH of this part to sample, analyze, measure, and provide, by means of readings recorded at least once every 15 minutes (using an automated data acquisition and handling system (DAHS)), a permanent record of nitrogen oxides emissions, stack gas volumetric flow rate, stack gas moisture content, and oxygen or carbon dioxide concentration (as applicable), in a manner consistent with part 75 of this chapter. The following systems are the principal types of continuous emission monitoring systems required under subpart HH of this part:

(1) A flow monitoring system, consisting of a stack flow rate monitor and an automated data acquisition and handling system and providing a permanent, continuous record of stack gas volumetric flow rate, in standard cubic feet per hour (scfh);

(2) A nitrogen oxides concentration monitoring system, consisting of a NO_X pollutant concentration monitor and an automated data acquisition and handling system and providing a permanent, continuous record of NO_X emissions, in parts per million (ppm);

(3) A nitrogen oxides emission rate (or NO_X-diluent) monitoring system, consisting of a NO_X pollutant concentration monitor, a diluent gas (CO_2 or O_2) monitor, and an automated data acquisition and handling system and providing a permanent, continuous record of NO_X concentration, in parts per million (ppm), diluent gas concentration, in percent CO_2 or O_2; and NO_X emission rate, in pounds per million British thermal units (lb/mmBtu);

(4) A moisture monitoring system, as defined in § 75.11(b)(2) of this chapter and providing a permanent, continuous record of the stack gas moisture content, in percent H_2O;

(5) A carbon dioxide monitoring system, consisting of a CO_2 pollutant concentration monitor (or an oxygen monitor plus suitable mathematical equations from which the CO_2 concentration is derived) and an automated data acquisition and handling system and providing a permanent, continuous record of CO_2 emissions, in percent CO_2; and

(6) An oxygen monitoring system, consisting of an O_2 concentration monitor and an automated data acquisition and handling system and providing a permanent, continuous record of O_2, in percent O_2.

Control period means the period beginning January 1 of a calendar year, except as provided in § 96.106(c)(2), and ending on December 31 of the same year, inclusive.

Emissions means air pollutants exhausted from a unit or source into the atmosphere, as measured, recorded, and reported to the Administrator by the CAIR designated representative and as determined by the Administrator in accordance with subpart HH of this part.

Excess emissions means any ton of nitrogen oxides emitted by the CAIR NO_X units at a CAIR NO_X source during a control period that exceeds the CAIR NO_X emissions limitation for the source.

Fossil fuel means natural gas, petroleum, coal, or any form of solid, liquid, or gaseous fuel derived from such material.

Fossil-fuel-fired means, with regard to a unit, combusting any amount of fossil fuel in any calendar year.

Fuel oil means any petroleum-based fuel (including diesel fuel or petroleum derivatives such as oil tar) and any recycled or blended petroleum products or petroleum by-products used as a fuel whether in a liquid, solid, or gaseous state.

General account means a CAIR NO_X Allowance Tracking System account, established under subpart FF of this part, that is not a compliance account.

Generator means a device that produces electricity.

Gross electrical output means, with regard to a cogeneration unit, electricity made available for use, including any such electricity used in the power production process (which process includes, but is not limited to, any onsite processing or treatment of fuel

combusted at the unit and any on-site emission controls).

Heat input means, with regard to a specified period of time, the product (in mmBtu/time) of the gross calorific value of the fuel (in Btu/lb) divided by 1,000,000 Btu/mmBtu and multiplied by the fuel feed rate into a combustion device (in lb of fuel/time), as measured, recorded, and reported to the Administrator by the CAIR designated representative and determined by the Administrator in accordance with subpart HH of this part and excluding the heat derived from preheated combustion air, recirculated flue gases, or exhaust from other sources.

Heat input rate means the amount of heat input (in mmBtu) divided by unit operating time (in hr) or, with regard to a specific fuel, the amount of heat input attributed to the fuel (in mmBtu) divided by the unit operating time (in hr) during which the unit combusts the fuel.

Hg Budget Trading Program means a multi-state Hg air pollution control and emission reduction program approved and administered by the Administrator in accordance subpart HHHH of part 60 of this chapter and § 60.24(h)(6), or established by the Administrator under section 111 of the Clean Air Act, as a means of reducing national Hg emissions.

Life-of-the-unit, firm power contractual arrangement means a unit participation power sales agreement under which a utility or industrial customer reserves, or is entitled to receive, a specified amount or percentage of nameplate capacity and associated energy generated by any specified unit and pays its proportional amount of such unit's total costs, pursuant to a contract:

(1) For the life of the unit;

(2) For a cumulative term of no less than 30 years, including contracts that permit an election for early termination; or

(3) For a period no less than 25 years or 70 percent of the economic useful life of the unit determined as of the time the unit is built, with option rights to purchase or release some portion of the nameplate capacity and associated energy generated by the unit at the end of the period.

Maximum design heat input means the maximum amount of fuel per hour (in Btu/hr) that a unit is capable of combusting on a steady state basis as of the initial installation of the unit as specified by the manufacturer of the unit.

Monitoring system means any monitoring system that meets the requirements of subpart HH of this part, including a continuous emissions monitoring system, an alternative monitoring system, or an excepted monitoring system under part 75 of this chapter.

Most stringent State or Federal NO_X emissions limitation means, with regard to a unit, the lowest NO_X emissions limitation (in terms of lb/mmBtu) that is applicable to the unit under State or Federal law, regardless of the averaging period to which the emissions limitation applies.

Nameplate capacity means, starting from the initial installation of a generator, the maximum electrical generating output (in MWe) that the generator is capable of producing on a steady state basis and during continuous operation (when not restricted by seasonal or other deratings) as of such installation as specified by the manufacturer of the generator or, starting from the completion of any subsequent physical change in the generator resulting in an increase in the maximum electrical generating output (in MWe) that the generator is capable of producing on a steady state basis and during continuous operation (when not restricted by seasonal or other deratings), such increased maximum amount as of such completion as specified by the person conducting the physical change.

Oil-fired means, for purposes of subpart EE of this part, combusting fuel oil for more than 15.0 percent of the annual heat input in a specified year and not qualifying as coal-fired.

Operator means any person who operates, controls, or supervises a CAIR NO_X unit or a CAIR NO_X source and shall include, but not be limited to, any holding company, utility system, or plant manager of such a unit or source.

Owner means any of the following persons:

(1) With regard to a CAIR NO_X source or a CAIR NO_X unit at a source, respectively:

(i) Any holder of any portion of the legal or equitable title in a CAIR NO_X unit at the source or the CAIR NO_X unit;

(ii) Any holder of a leasehold interest in a CAIR NO_X unit at the source or the CAIR NO_X unit; or

(iii) Any purchaser of power from a CAIR NO_X unit at the source or the CAIR NO_X unit under a life-of-the-unit, firm power contractual arrangement; provided that, unless expressly provided for in a leasehold agreement, owner shall not include a passive lessor, or a person who has an equitable interest through such lessor, whose rental payments are not based (either directly or indirectly) on the revenues or income from such CAIR NO_X unit; or

(2) With regard to any general account, any person who has an ownership interest with respect to the CAIR NO_X allowances held in the general account and who is subject to the binding agreement for the CAIR authorized account representative to represent the person's ownership interest with respect to CAIR NO_X allowances.

Permitting authority means the State air pollution control agency, local agency, other State agency, or other agency authorized by the Administrator to issue or revise permits to meet the requirements of the CAIR NO_X Annual Trading Program or, if no such agency has been so authorized, the Administrator.

Potential electrical output capacity means 33 percent of a unit's maximum design heat input, divided by 3,413 Btu/kWh, divided by 1,000 kWh/MWh, and multiplied by 8,760 hr/yr.

Receive or receipt of means, when referring to the permitting authority or the Administrator, to come into possession of a document, information, or correspondence (whether sent in hard copy or by authorized electronic transmission), as indicated in an official log, or by a notation made on the document, information, or correspondence, by the permitting authority or the Administrator in the regular course of business.

Recordation, *record*, or *recorded* means, with regard to CAIR NO_X allowances, the movement of CAIR NO_X allowances by the Administrator into or between CAIR NO_X Allowance Tracking System accounts, for purposes of allocation, transfer, or deduction.

Reference method means any direct test method of sampling and analyzing for an air pollutant as specified in § 75.22 of this chapter.

Replacement, *replace*, or *replaced* means, with regard to a unit, the demolishing of a unit, or the permanent shutdown and permanent disabling of a unit, and the construction of another unit (the replacement unit) to be used instead of the demolished or shutdown unit (the replaced unit).

Repowered means, with regard to a unit, replacement of a coal-fired boiler with one of the following coal-fired technologies at the same source as the coal-fired boiler:

(1) Atmospheric or pressurized fluidized bed combustion;

(2) Integrated gasification combined cycle;

(3) Magnetohydrodynamics;

(4) Direct and indirect coal-fired turbines;

(5) Integrated gasification fuel cells; or

(6) As determined by the Administrator in consultation with the Secretary of Energy, a derivative of one or more of the technologies under paragraphs (1) through (5) of this definition and any other coal-fired technology capable of controlling multiple combustion emissions simultaneously with improved boiler or generation efficiency and with significantly greater waste reduction relative to the performance of technology in widespread commercial use as of January 1, 2005.

Serial number means, for a CAIR NO_X allowance, the unique identification number assigned to each CAIR NO_X allowance by the Administrator.

Sequential use of energy means:

(1) For a topping-cycle cogeneration unit, the use of reject heat from electricity production in a useful thermal energy application or process; or

(2) For a bottoming-cycle cogeneration unit, the use of reject heat from useful thermal energy application or process in electricity production.

Solid waste incineration unit means a stationary, fossil-fuel-fired boiler or

stationary, fossil-fuel-fired combustion turbine that is a ''solid waste incineration unit'' as defined in section 129(g)(1) of the Clean Air Act.

Source means all buildings, structures, or installations located in one or more contiguous or adjacent properties under common control of the same person or persons. For purposes of section 502(c) of the Clean Air Act, a ''source,'' including a ''source'' with multiple units, shall be considered a single ''facility.''

State means one of the States or the District of Columbia that adopts the CAIR NO_X Annual Trading Program pursuant to § 51.123(o)(1) or (2) of this chapter.

Submit or serve means to send or transmit a document, information, or correspondence to the person specified in accordance with the applicable regulation:

(1) In person;

(2) By United States Postal Service; or

(3) By other means of dispatch or transmission and delivery. Compliance with any ''submission'' or ''service'' deadline shall be determined by the date of dispatch, transmission, or mailing and not the date of receipt.

Title V operating permit means a permit issued under title V of the Clean Air Act and part 70 or part 71 of this chapter.

Title V operating permit regulations means the regulations that the Administrator has approved or issued as meeting the requirements of title V of the Clean Air Act and part 70 or 71 of this chapter.

Ton means 2,000 pounds. For the purpose of determining compliance with the CAIR NO_X emissions limitation, total tons of nitrogen oxides emissions for a control period shall be calculated as the sum of all recorded hourly emissions (or the mass equivalent of the recorded hourly emission rates) in accordance with subpart HH of this part, but with any remaining fraction of a ton equal to or greater than 0.50 tons deemed to equal one ton and any remaining fraction of a ton less than 0.50 tons deemed to equal zero tons.

Topping-cycle cogeneration unit means a cogeneration unit in which the energy input to the unit is first used to produce useful power, including electricity, and at least some of the reject heat from the electricity production is then used to provide useful thermal energy.

Total energy input means, with regard to a cogeneration unit, total energy of all forms supplied to the cogeneration unit, excluding energy produced by the cogeneration unit itself. Each form of energy supplied shall be measured by the lower heating value of that form of energy calculated as follows:

$$LHV = HHV - 10.55(W + 9H)$$

Where:

LHV = lower heating value of fuel in Btu/lb,
HHV = higher heating value of fuel in Btu/lb,
W = Weight % of moisture in fuel, and
H = Weight % of hydrogen in fuel.

Total energy output means, with regard to a cogeneration unit, the sum of useful power and useful thermal energy produced by the cogeneration unit.

Unit means a stationary, fossil-fuel-fired boiler or combustion turbine or other stationary, fossil-fuel-fired combustion device.

Unit operating day means a calendar day in which a unit combusts any fuel.

Unit operating hour or *hour of unit operation* means an hour in which a unit combusts any fuel.

Useful power means, with regard to a cogeneration unit, electricity or mechanical energy made available for use, excluding any such energy used in the power production process (which process includes, but is not limited to, any on-site processing or treatment of fuel combusted at the unit and any on-site emission controls).

Useful thermal energy means, with regard to a cogeneration unit, thermal energy that is:

(1) Made available to an industrial or commercial process (not a power production process), excluding any heat contained in condensate return or makeup water;

(2) Used in a heating application (*e.g.*, space heating or domestic hot water heating); or

(3) Used in a space cooling application (*i.e.*, thermal energy used by an absorption chiller).

Utility power distribution system means the portion of an electricity grid owned

or operated by a utility and dedicated to delivering electricity to customers.

[70 FR 25339, May 12, 2005, as amended at 71 FR 25380, Apr. 28, 2006; 71 FR 74794, Dec. 13, 2006; 72 FR 59205, Oct. 19, 2007]

§ 96.103 Measurements, abbreviations, and acronyms.

Measurements, abbreviations, and acronyms used in this subpart and subparts BB through II are defined as follows:

Btu—British thermal unit.
CO_2—carbon dioxide
H_2O—water
Hg—mercury
hr—hour
kW—kilowatt electrical
kWh—kilowatt hour
lb—pound
mmBtu—million Btu
MWe—megawatt electrical
MWh—megawatt hour
NO_X—nitrogen oxides
O2—oxygen
ppm—parts per million
scfh—standard cubic feet per hour
SO_2—sulfur dioxide
yr—year

[71 FR 25381, Apr. 28, 2006]

§ 96.104 Applicability.

(a) Except as provided in paragraph (b) of this section:

(1) The following units in a State shall be CAIR NO_X units, and any source that includes one or more such units shall be a CAIR NO_X source, subject to the requirements of this subpart and subparts BB through HH of this part: any stationary, fossil-fuel-fired boiler or stationary, fossil-fuel-fired combustion turbine serving at any time, since the later of November 15, 1990 or the start-up of the unit's combustion chamber, a generator with nameplate capacity of more than 25 MWe producing electricity for sale.

(2) If a stationary boiler or stationary combustion turbine that, under paragraph (a)(1) of this section, is not a CAIR NO_X unit begins to combust fossil fuel or to serve a generator with nameplate capacity of more than 25 MWe producing electricity for sale, the unit shall become a CAIR NO_X unit as provided in paragraph (a)(1) of this section on the first date on which it both combusts fossil fuel and serves such generator.

(b) The units in a State that meet the requirements set forth in paragraph (b)(1)(i), (b)(2)(i), or (b)(2)(ii) of this section shall not be CAIR NO_X units:

(1)(i) Any unit that is a CAIR NO_X unit under paragraph (a)(1) or (2) of this section:

(A) Qualifying as a cogeneration unit during the 12-month period starting on the date the unit first produces electricity and continuing to qualify as a cogeneration unit; and

(B) Not serving at any time, since the later of November 15, 1990 or the start-up of the unit's combustion chamber, a generator with nameplate capacity of more than 25 MWe supplying in any calendar year more than one-third of the unit's potential electric output capacity or 219,000 MWh, whichever is greater, to any utility power distribution system for sale.

(ii) If a unit qualifies as a cogeneration unit during the 12-month period starting on the date the unit first produces electricity and meets the requirements of paragraphs (b)(1)(i) of this section for at least one calendar year, but subsequently no longer meets all such requirements, the unit shall become a CAIR NO_X unit starting on the earlier of January 1 after the first calendar year during which the unit first no longer qualifies as a cogeneration unit or January 1 after the first calendar year during which the unit no longer meets the requirements of paragraph (b)(1)(i)(B) of this section.

(2)(i) Any unit that is a CAIR NO_X unit under paragraph (a)(1) or (2) of this section commencing operation before January 1, 1985:

(A) Qualifying as a solid waste incineration unit; and

(B) With an average annual fuel consumption of non-fossil fuel for 1985–1987 exceeding 80 percent (on a Btu basis) and an average annual fuel consumption of non-fossil fuel for any 3 consecutive calendar years after 1990 exceeding 80 percent (on a Btu basis).

(ii) Any unit that is a CAIR NO_X unit under paragraph (a)(1) or (2) of this section commencing operation on or after January 1, 1985:

(A) Qualifying as a solid waste incineration unit; and

(B) With an average annual fuel consumption of non-fossil fuel for the first 3 calendar years of operation exceeding 80 percent (on a Btu basis) and an average annual fuel consumption of non-fossil fuel for any 3 consecutive calendar years after 1990 exceeding 80 percent (on a Btu basis).

(iii) If a unit qualifies as a solid waste incineration unit and meets the requirements of paragraph (b)(2)(i) or (ii) of this section for at least 3 consecutive calendar years, but subsequently no longer meets all such requirements, the unit shall become a CAIR NO_X unit starting on the earlier of January 1 after the first calendar year during which the unit first no longer qualifies as a solid waste incineration unit or January 1 after the first 3 consecutive calendar years after 1990 for which the unit has an average annual fuel consumption of fossil fuel of 20 percent or more.

[71 FR 25382, Apr. 28, 2006]

§ 96.105 Retired unit exemption.

(a)(1) Any CAIR NO_X unit that is permanently retired and is not a CAIR NO_X opt-in unit under subpart II of this part shall be exempt from the CAIR NO_X Annual Trading Program, except for the provisions of this section, § 96.102, § 96.103, § 96.104, § 96.106(c)(4) through (7), § 96.107, § 96.108, and subparts BB and EE through GG.

(2) The exemption under paragraph (a)(1) of this section shall become effective the day on which the CAIR NO_X unit is permanently retired. Within 30 days of the unit's permanent retirement, the CAIR designated representative shall submit a statement to the permitting authority otherwise responsible for administering any CAIR permit for the unit and shall submit a copy of the statement to the Administrator. The statement shall state, in a format prescribed by the permitting authority, that the unit was permanently retired on a specific date and will comply with the requirements of paragraph (b) of this section.

(3) After receipt of the statement under paragraph (a)(2) of this section, the permitting authority will amend any permit under subpart CC of this part covering the source at which the unit is located to add the provisions and requirements of the exemption under paragraphs (a)(1) and (b) of this section.

(b) *Special provisions.* (1) A unit exempt under paragraph (a) of this section shall not emit any nitrogen oxides, starting on the date that the exemption takes effect.

(2) The permitting authority will allocate CAIR NO_X allowances under subpart EE of this part to a unit exempt under paragraph (a) of this section.

(3) For a period of 5 years from the date the records are created, the owners and operators of a unit exempt under paragraph (a) of this section shall retain, at the source that includes the unit, records demonstrating that the unit is permanently retired. The 5-year period for keeping records may be extended for cause, at any time before the end of the period, in writing by the permitting authority or the Administrator. The owners and operators bear the burden of proof that the unit is permanently retired.

(4) The owners and operators and, to the extent applicable, the CAIR designated representative of a unit exempt under paragraph (a) of this section shall comply with the requirements of the CAIR NO_X Annual Trading Program concerning all periods for which the exemption is not in effect, even if such requirements arise, or must be complied with, after the exemption takes effect.

(5) A unit exempt under paragraph (a) of this section and located at a source that is required, or but for this exemption would be required, to have a title V operating permit shall not resume operation unless the CAIR designated representative of the source submits a complete CAIR permit application under § 96.122 for the unit not less than 18 months (or such lesser time provided by the permitting authority) before the later of January 1, 2009 or the date on which the unit resumes operation.

(6) On the earlier of the following dates, a unit exempt under paragraph (a) of this section shall lose its exemption:

(i) The date on which the CAIR designated representative submits a CAIR

permit application for the unit under paragraph (b)(5) of this section;

(ii) The date on which the CAIR designated representative is required under paragraph (b)(5) of this section to submit a CAIR permit application for the unit; or

(iii) The date on which the unit resumes operation, if the CAIR designated representative is not required to submit a CAIR permit application for the unit.

(7) For the purpose of applying monitoring, reporting, and recordkeeping requirements under subpart HH of this part, a unit that loses its exemption under paragraph (a) of this section shall be treated as a unit that commences commercial operation on the first date on which the unit resumes operation.

[70 FR 25339, May 12, 2005, as amended at 71 FR 25382, Apr. 28, 2006; 71 FR 74794, Dec. 13, 2006]

§ 96.106 Standard requirements.

(a) *Permit requirements.* (1) The CAIR designated representative of each CAIR NO_X source required to have a title V operating permit and each CAIR NO_X unit required to have a title V operating permit at the source shall:

(i) Submit to the permitting authority a complete CAIR permit application under § 96.122 in accordance with the deadlines specified in § 96.121; and

(ii) Submit in a timely manner any supplemental information that the permitting authority determines is necessary in order to review a CAIR permit application and issue or deny a CAIR permit.

(2) The owners and operators of each CAIR NO_X source required to have a title V operating permit and each CAIR NO_X unit required to have a title V operating permit at the source shall have a CAIR permit issued by the permitting authority under subpart CC of this part for the source and operate the source and the unit in compliance with such CAIR permit.

(3) Except as provided in subpart II of this part, the owners and operators of a CAIR NO_X source that is not otherwise required to have a title V operating permit and each CAIR NO_X unit that is not otherwise required to have a title V operating permit are not required to submit a CAIR permit application, and to have a CAIR permit, under subpart CC of this part for such CAIR NO_X source and such CAIR NO_X unit.

(b) *Monitoring, reporting, and recordkeeping requirements.* (1) The owners and operators, and the CAIR designated representative, of each CAIR NO_X source and each CAIR NO_X unit at the source shall comply with the monitoring, reporting, and recordkeeping requirements of subpart HH of this part.

(2) The emissions measurements recorded and reported in accordance with subpart HH of this part shall be used to determine compliance by each CAIR NO_X source with the CAIR NO_X emissions limitation under paragraph (c) of this section.

(c) *Nitrogen oxides emission requirements.* (1) As of the allowance transfer deadline for a control period, the owners and operators of each CAIR NO_X source and each CAIR NO_X unit at the source shall hold, in the source's compliance account, CAIR NO_X allowances available for compliance deductions for the control period under § 96.154(a) in an amount not less than the tons of total nitrogen oxides emissions for the control period from all CAIR NO_X units at the source, as determined in accordance with subpart HH of this part.

(2) A CAIR NO_X unit shall be subject to the requirements under paragraph (c)(1) of this section for the control period starting on the later of January 1, 2009 or the deadline for meeting the unit's monitor certification requirements under § 96.170(b)(1), (2), or (5) and for each control period thereafter.

(3) A CAIR NO_X allowance shall not be deducted, for compliance with the requirements under paragraph (c)(1) of this section, for a control period in a calendar year before the year for which the CAIR NO_X allowance was allocated.

(4) CAIR NO_X allowances shall be held in, deducted from, or transferred into or among CAIR NO_X Allowance Tracking System accounts in accordance with subparts FF, GG, and II of this part.

(5) A CAIR NO_X allowance is a limited authorization to emit one ton of nitrogen oxides in accordance with the CAIR NO_X Annual Trading Program. No provision of the CAIR NO_X Annual

Trading Program, the CAIR permit application, the CAIR permit, or an exemption under § 96.105 and no provision of law shall be construed to limit the authority of the State or the United States to terminate or limit such authorization.

(6) A CAIR NO_X allowance does not constitute a property right.

(7) Upon recordation by the Administrator under subpart EE, FF, GG, or II of this part, every allocation, transfer, or deduction of a CAIR NO_X allowance to or from a CAIR NO_X source's compliance account is incorporated automatically in any CAIR permit of the source.

(d) *Excess emissions requirements.* If a CAIR NO_X source emits nitrogen oxides during any control period in excess of the CAIR NO_X emissions limitation, then:

(1) The owners and operators of the source and each CAIR NO_X unit at the source shall surrender the CAIR NO_X allowances required for deduction under § 96.154(d)(1) and pay any fine, penalty, or assessment or comply with any other remedy imposed, for the same violations, under the Clean Air Act or applicable State law; and

(2) Each ton of such excess emissions and each day of such control period shall constitute a separate violation of this subpart, the Clean Air Act, and applicable State law.

(e) *Recordkeeping and reporting requirements.* (1) Unless otherwise provided, the owners and operators of the CAIR NO_X source and each CAIR NO_X unit at the source shall keep on site at the source each of the following documents for a period of 5 years from the date the document is created. This period may be extended for cause, at any time before the end of 5 years, in writing by the permitting authority or the Administrator.

(i) The certificate of representation under § 96.113 for the CAIR designated representative for the source and each CAIR NO_X unit at the source and all documents that demonstrate the truth of the statements in the certificate of representation; provided that the certificate and documents shall be retained on site at the source beyond such 5-year period until such documents are superseded because of the submission of a new certificate of representation under § 96.113 changing the CAIR designated representative.

(ii) All emissions monitoring information, in accordance with subpart HH of this part, provided that to the extent that subpart HH of this part provides for a 3-year period for recordkeeping, the 3-year period shall apply.

(iii) Copies of all reports, compliance certifications, and other submissions and all records made or required under the CAIR NO_X Annual Trading Program.

(iv) Copies of all documents used to complete a CAIR permit application and any other submission under the CAIR NO_X Annual Trading Program or to demonstrate compliance with the requirements of the CAIR NO_X Annual Trading Program.

(2) The CAIR designated representative of a CAIR NO_X source and each CAIR NO_X unit at the source shall submit the reports required under the CAIR NO_X Annual Trading Program, including those under subpart HH of this part.

(f) *Liability.* (1) Each CAIR NO_X source and each CAIR NO_X unit shall meet the requirements of the CAIR NO_X Annual Trading Program.

(2) Any provision of the CAIR NO_X Annual Trading Program that applies to a CAIR NO_X source or the CAIR designated representative of a CAIR NO_X source shall also apply to the owners and operators of such source and of the CAIR NO_X units at the source.

(3) Any provision of the CAIR NO_X Annual Trading Program that applies to a CAIR NO_X unit or the CAIR designated representative of a CAIR NO_X unit shall also apply to the owners and operators of such unit.

(g) *Effect on other authorities.* No provision of the CAIR NO_X Annual Trading Program, a CAIR permit application, a CAIR permit, or an exemption under § 96.105 shall be construed as exempting or excluding the owners and operators, and the CAIR designated representative, of a CAIR NO_X source or CAIR NO_X unit from compliance with any other provision of the applicable, approved State implementation plan, a federally enforceable permit, or the Clean Air Act.

[70 FR 25339, May 12, 2005, as amended at 71 FR 25382, Apr. 28, 2006]

§96.107 Computation of time.

(a) Unless otherwise stated, any time period scheduled, under the CAIR NO_X Annual Trading Program, to begin on the occurrence of an act or event shall begin on the day the act or event occurs.

(b) Unless otherwise stated, any time period scheduled, under the CAIR NO_X Annual Trading Program, to begin before the occurrence of an act or event shall be computed so that the period ends the day before the act or event occurs.

(c) Unless otherwise stated, if the final day of any time period, under the CAIR NO_X Annual Trading Program, falls on a weekend or a State or Federal holiday, the time period shall be extended to the next business day.

§96.108 Appeal procedures.

The appeal procedures for decisions of the Administrator under the CAIR NO_X Annual Trading Program are set forth in part 78 of this chapter.

Subpart BB—CAIR Designated Representative for CAIR NO_X Sources

SOURCE: 70 FR 25339, May 12, 2005, unless otherwise noted.

§96.110 Authorization and responsibilities of CAIR designated representative.

(a) Except as provided under §96.111, each CAIR NO_X source, including all CAIR NO_X units at the source, shall have one and only one CAIR designated representative, with regard to all matters under the CAIR NO_X Annual Trading Program concerning the source or any CAIR NO_X unit at the source.

(b) The CAIR designated representative of the CAIR NO_X source shall be selected by an agreement binding on the owners and operators of the source and all CAIR NO_X units at the source and shall act in accordance with the certification statement in §96.113(a)(4)(iv).

(c) Upon receipt by the Administrator of a complete certificate of representation under §96.113, the CAIR designated representative of the source shall represent and, by his or her representations, actions, inactions, or submissions, legally bind each owner and operator of the CAIR NO_X source represented and each CAIR NO_X unit at the source in all matters pertaining to the CAIR NO_X Annual Trading Program, notwithstanding any agreement between the CAIR designated representative and such owners and operators. The owners and operators shall be bound by any decision or order issued to the CAIR designated representative by the permitting authority, the Administrator, or a court regarding the source or unit.

(d) No CAIR permit will be issued, no emissions data reports will be accepted, and no CAIR NO_X Allowance Tracking System account will be established for a CAIR NO_X unit at a source, until the Administrator has received a complete certificate of representation under §96.113 for a CAIR designated representative of the source and the CAIR NO_X units at the source.

(e)(1) Each submission under the CAIR NO_X Annual Trading Program shall be submitted, signed, and certified by the CAIR designated representative for each CAIR NO_X source on behalf of which the submission is made. Each such submission shall include the following certification statement by the CAIR designated representative: ''I am authorized to make this submission on behalf of the owners and operators of the source or units for which the submission is made. I certify under penalty of law that I have personally examined, and am familiar with, the statements and information submitted in this document and all its attachments. Based on my inquiry of those individuals with primary responsibility for obtaining the information, I certify that the statements and information are to the best of my knowledge and belief true, accurate, and complete. I am aware that there are significant penalties for submitting false statements and information or omitting required statements and information, including the possibility of fine or imprisonment.''

(2) The permitting authority and the Administrator will accept or act on a submission made on behalf of owner or operators of a CAIR NO_X source or a CAIR NO_X unit only if the submission

has been made, signed, and certified in accordance with paragraph (e)(1) of this section.

§ 96.111 Alternate CAIR designated representative.

(a) A certificate of representation under § 96.113 may designate one and only one alternate CAIR designated representative, who may act on behalf of the CAIR designated representative. The agreement by which the alternate CAIR designated representative is selected shall include a procedure for authorizing the alternate CAIR designated representative to act in lieu of the CAIR designated representative.

(b) Upon receipt by the Administrator of a complete certificate of representation under § 96.113, any representation, action, inaction, or submission by the alternate CAIR designated representative shall be deemed to be a representation, action, inaction, or submission by the CAIR designated representative.

(c) Except in this section and §§ 96.102, 96.110(a) and (d), 96.112, 96.113, 96.115, 96.151, and 96.182, whenever the term ''CAIR designated representative'' is used in subparts AA through II of this part, the term shall be construed to include the CAIR designated representative or any alternate CAIR designated representative.

[70 FR 25339, May 12, 2005, as amended at 71 FR 25382, Apr. 28, 2006]

§ 96.112 Changing CAIR designated representative and alternate CAIR designated representative; changes in owners and operators.

(a) *Changing CAIR designated representative.* The CAIR designated representative may be changed at any time upon receipt by the Administrator of a superseding complete certificate of representation under § 96.113. Notwithstanding any such change, all representations, actions, inactions, and submissions by the previous CAIR designated representative before the time and date when the Administrator receives the superseding certificate of representation shall be binding on the new CAIR designated representative and the owners and operators of the CAIR NO_X source and the CAIR NO_X units at the source.

(b) *Changing alternate CAIR designated representative.* The alternate CAIR designated representative may be changed at any time upon receipt by the Administrator of a superseding complete certificate of representation under § 96.113. Notwithstanding any such change, all representations, actions, inactions, and submissions by the previous alternate CAIR designated representative before the time and date when the Administrator receives the superseding certificate of representation shall be binding on the new alternate CAIR designated representative and the owners and operators of the CAIR NO_X source and the CAIR NO_X units at the source.

(c) *Changes in owners and operators.* (1) In the event an owner or operator of a CAIR NO_X source or a CAIR NO_X unit is not included in the list of owners and operators in the certificate of representation under § 96.113, such owner or operator shall be deemed to be subject to and bound by the certificate of representation, the representations, actions, inactions, and submissions of the CAIR designated representative and any alternate CAIR designated representative of the source or unit, and the decisions and orders of the permitting authority, the Administrator, or a court, as if the owner or operator were included in such list.

(2) Within 30 days following any change in the owners and operators of a CAIR NO_X source or a CAIR NO_X unit, including the addition of a new owner or operator, the CAIR designated representative or any alternate CAIR designated representative shall submit a revision to the certificate of representation under § 96.113 amending the list of owners and operators to include the change.

[70 FR 25339, May 12, 2005, as amended at 71 FR 25382, Apr. 28, 2006]

§ 96.113 Certificate of representation.

(a) A complete certificate of representation for a CAIR designated representative or an alternate CAIR designated representative shall include the following elements in a format prescribed by the Administrator:

(1) Identification of the CAIR NO_X source, and each CAIR NO_X unit at the

source, for which the certificate of representation is submitted, including identification and nameplate capacity of each generator served by each such unit.

(2) The name, address, e-mail address (if any), telephone number, and facsimile transmission number (if any) of the CAIR designated representative and any alternate CAIR designated representative.

(3) A list of the owners and operators of the CAIR NO_X source and of each CAIR NO_X unit at the source.

(4) The following certification statements by the CAIR designated representative and any alternate CAIR designated representative—

(i) ''I certify that I was selected as the CAIR designated representative or alternate CAIR designated representative, as applicable, by an agreement binding on the owners and operators of the source and each CAIR NO_X unit at the source.''

(ii) ''I certify that I have all the necessary authority to carry out my duties and responsibilities under the CAIR NO_X Annual Trading Program on behalf of the owners and operators of the source and of each CAIR NO_X unit at the source and that each such owner and operator shall be fully bound by my representations, actions, inactions, or submissions.''

(iii) ''I certify that the owners and operators of the source and of each CAIR NO_X unit at the source shall be bound by any order issued to me by the Administrator, the permitting authority, or a court regarding the source or unit.''

(iv) ''Where there are multiple holders of a legal or equitable title to, or a leasehold interest in, a CAIR NO_X unit, or where a utility or industrial customer purchases power from a CAIR NO_X unit under a life-of-the-unit, firm power contractual arrangement, I certify that: I have given a written notice of my selection as the 'CAIR designated representative' or 'alternate CAIR designated representative', as applicable, and of the agreement by which I was selected to each owner and operator of the source and of each CAIR NO_X unit at the source; and CAIR NO_X allowances and proceeds of transactions involving CAIR NO_X allowances will be deemed to be held or distributed in proportion to each holder's legal, equitable, leasehold, or contractual reservation or entitlement, except that, if such multiple holders have expressly provided for a different distribution of CAIR NO_X allowances by contract, CAIR NO_X allowances and proceeds of transactions involving CAIR NO_X allowances will be deemed to be held or distributed in accordance with the contract.''

(5) The signature of the CAIR designated representative and any alternate CAIR designated representative and the dates signed.

(b) Unless otherwise required by the permitting authority or the Administrator, documents of agreement referred to in the certificate of representation shall not be submitted to the permitting authority or the Administrator. Neither the permitting authority nor the Administrator shall be under any obligation to review or evaluate the sufficiency of such documents, if submitted.

[70 FR 25339, May 12, 2005, as amended at 71 FR 25382, Apr. 28, 2006]

§ 96.114 Objections concerning CAIR designated representative.

(a) Once a complete certificate of representation under § 96.113 has been submitted and received, the permitting authority and the Administrator will rely on the certificate of representation unless and until a superseding complete certificate of representation under § 96.113 is received by the Administrator.

(b) Except as provided in § 96.112(a) or (b), no objection or other communication submitted to the permitting authority or the Administrator concerning the authorization, or any representation, action, inaction, or submission, of the CAIR designated representative shall affect any representation, action, inaction, or submission of the CAIR designated representative or the finality of any decision or order by the permitting authority or the Administrator under the CAIR NO_X Annual Trading Program.

(c) Neither the permitting authority nor the Administrator will adjudicate any private legal dispute concerning

the authorization or any representation, action, inaction, or submission of any CAIR designated representative, including private legal disputes concerning the proceeds of CAIR NO_X allowance transfers.

§ 96.115 Delegation by CAIR designated representative and alternate CAIR designated representative.

(a) A CAIR designated representative may delegate, to one or more natural persons, his or her authority to make an electronic submission to the Administrator provided for or required under this part.

(b) An alternate CAIR designated representative may delegate, to one or more natural persons, his or her authority to make an electronic submission to the Administrator provided for or required under this part.

(c) In order to delegate authority to make an electronic submission to the Administrator in accordance with paragraph (a) or (b) of this section, the CAIR designated representative or alternate CAIR designated representative, as appropriate, must submit to the Administrator a notice of delegation, in a format prescribed by the Administrator, that includes the following elements:

(1) The name, address, e-mail address, telephone number, and facsimile transmission number (if any) of such CAIR designated representative or alternate CAIR designated representative;

(2) The name, address, e-mail address, telephone number, and facsimile transmission number (if any) of each such natural person (referred to as an ''agent'');

(3) For each such natural person, a list of the type or types of electronic submissions under paragraph (a) or (b) of this section for which authority is delegated to him or her; and

(4) The following certification statements by such CAIR designated representative or alternate CAIR designated representative:

(i) ''I agree that any electronic submission to the Administrator that is by an agent identified in this notice of delegation and of a type listed for such agent in this notice of delegation and that is made when I am a CAIR designated representative or alternate CAIR designated representative, as appropriate, and before this notice of delegation is superseded by another notice of delegation under 40 CFR 96.115(d) shall be deemed to be an electronic submission by me.''

(ii) ''Until this notice of delegation is superseded by another notice of delegation under 40 CFR 96.115(d), I agree to maintain an e-mail account and to notify the Administrator immediately of any change in my e-mail address unless all delegation of authority by me under 40 CFR 96.115 is terminated.''

(d) A notice of delegation submitted under paragraph (c) of this section shall be effective, with regard to the CAIR designated representative or alternate CAIR designated representative identified in such notice, upon receipt of such notice by the Administrator and until receipt by the Administrator of a superseding notice of delegation submitted by such CAIR designated representative or alternate CAIR designated representative, as appropriate. The superseding notice of delegation may replace any previously identified agent, add a new agent, or eliminate entirely any delegation of authority.

(e) Any electronic submission covered by the certification in paragraph (c)(4)(i) of this section and made in accordance with a notice of delegation effective under paragraph (d) of this section shall be deemed to be an electronic submission by the CAIR designated representative or alternate CAIR designated representative submitting such notice of delegation.

[71 FR 25382, Apr. 28, 2006, as amended at 71 FR 74794, Dec. 13, 2006]

Subpart CC—Permits

SOURCE: 70 FR 25339, May 12, 2005, unless otherwise noted.

§ 96.120 General CAIR NO_X Annual Trading Program permit requirements.

(a) For each CAIR NO_X source required to have a title V operating permit or required, under subpart II of this part, to have a title V operating permit or other federally enforceable permit, such permit shall include a

CAIR permit administered by the permitting authority for the title V operating permit or the federally enforceable permit as applicable. The CAIR portion of the title V permit or other federally enforceable permit as applicable shall be administered in accordance with the permitting authority's title V operating permits regulations promulgated under part 70 or 71 of this chapter or the permitting authority's regulations for other federally enforceable permits as applicable, except as provided otherwise by § 96.105, this subpart, and subpart II of this part.

(b) Each CAIR permit shall contain, with regard to the CAIR NO_X source and the CAIR NO_X units at the source covered by the CAIR permit, all applicable CAIR NO_X Annual Trading Program, CAIR NO_X Ozone Season Trading Program, and CAIR SO_2 Trading Program requirements and shall be a complete and separable portion of the title V operating permit or other federally enforceable permit under paragraph (a) of this section.

[70 FR 25339, May 12, 2005, as amended at 71 FR 25383, Apr. 28, 2006]

§ 96.121 Submission of CAIR permit applications.

(a) *Duty to apply*. The CAIR designated representative of any CAIR NO_X source required to have a title V operating permit shall submit to the permitting authority a complete CAIR permit application under § 96.122 for the source covering each CAIR NO_X unit at the source at least 18 months (or such lesser time provided by the permitting authority) before the later of January 1, 2009 or the date on which the CAIR NO_X unit commences commercial operation, except as provided in § 96.183(a).

(b) *Duty to Reapply*. For a CAIR NO_X source required to have a title V operating permit, the CAIR designated representative shall submit a complete CAIR permit application under § 96.122 for the source covering each CAIR NO_X unit at the source to renew the CAIR permit in accordance with the permitting authority's title V operating permits regulations addressing permit renewal, except as provided in § 96.183(b).

[70 FR 25339, May 12, 2005, as amended at 71 FR 25383, Apr. 28, 2006]

§ 96.122 Information requirements for CAIR permit applications.

A complete CAIR permit application shall include the following elements concerning the CAIR NO_X source for which the application is submitted, in a format prescribed by the permitting authority:

(a) Identification of the CAIR NO_X source;

(b) Identification of each CAIR NO_X unit at the CAIR NO_X source; and

(c) The standard requirements under § 96.106.

§ 96.123 CAIR permit contents and term.

(a) Each CAIR permit will contain, in a format prescribed by the permitting authority, all elements required for a complete CAIR permit application under § 96.122.

(b) Each CAIR permit is deemed to incorporate automatically the definitions of terms under § 96.102 and, upon recordation by the Administrator under subpart EE, FF, GG, or II of this part, every allocation, transfer, or deduction of a CAIR NO_X allowance to or from the compliance account of the CAIR NO_X source covered by the permit.

(c) The term of the CAIR permit will be set by the permitting authority, as necessary to facilitate coordination of the renewal of the CAIR permit with issuance, revision, or renewal of the CAIR NO_X source's title V operating permit or other federally enforceable permit as applicable.

[70 FR 25339, May 12, 2005, as amended at 71 FR 25383, Apr. 28, 2006]

§ 96.124 CAIR permit revisions.

Except as provided in § 96.123(b), the permitting authority will revise the CAIR permit, as necessary, in accordance with the permitting authority's title V operating permits regulations or the permitting authority's regulations for other federally enforceable permits as applicable addressing permit revisions.

Subpart DD [Reserved]

Subpart EE—CAIR NO_X Allowance Allocations

SOURCE: 70 FR 25339, May 12, 2005, unless otherwise noted.

§ 96.140 State trading budgets.

The State trading budgets for annual allocations of CAIR NO_X allowances for the control periods in 2009 through 2014 and in 2015 and thereafter are respectively as follows:

State	State trading budget for 2009–2014 (tons)	State trading budget for 2015 and thereafter (tons)
Alabama	69,020	57,517
Delaware	4,166	3,472
District of Columbia	144	120
Florida	99,445	82,871
Georgia	66,321	55,268
Illinois	76,230	63,525
Indiana	108,935	90,779
Iowa	32,692	27,243
Kentucky	83,205	69,337
Louisiana	35,512	29,593
Maryland	27,724	23,104
Michigan	65,304	54,420
Minnesota	31,443	26,203
Mississippi	17,807	14,839
Missouri	59,871	49,892
New Jersey	12,670	10,558
New York	45,617	38,014
North Carolina	62,183	51,819
Ohio	108,667	90,556
Pennsylvania	99,049	82,541
South Carolina	32,662	27,219
Tennessee	50,973	42,478
Texas	181,014	150,845
Virginia	36,074	30,062
West Virginia	74,220	61,850
Wisconsin	40,759	33,966

[70 FR 25339, May 12, 2005, as amended at 71 FR 25302, Apr. 28, 2006]

§ 96.141 Timing requirements for CAIR NO_X allowance allocations.

(a) By October 31, 2006, the permitting authority will submit to the Administrator the CAIR NO_X allowance allocations, in a format prescribed by the Administrator and in accordance with § 96.142(a) and (b), for the control periods in 2009, 2010, 2011, 2012, 2013, and 2014.

(b) By October 31, 2009 and October 31 of each year thereafter, the permitting authority will submit to the Administrator the CAIR NO_X allowance allocations, in a format prescribed by the Administrator and in accordance with § 96.142(a) and (b), for the control period in the sixth year after the year of the applicable deadline for submission under this paragraph.

(c) By October 31, 2009 and October 31 of each year thereafter, the permitting authority will submit to the Administrator the CAIR NO_X allowance allocations, in a format prescribed by the Administrator and in accordance with § 96.142(a), (c), and (d), for the control period in the year of the applicable deadline for submission under this paragraph.

[70 FR 25339, May 12, 2005, as amended at 71 FR 25383, Apr. 28, 2006]

§ 96.142 CAIR NO_X allowance allocations.

(a)(1) The baseline heat input (in mmBtu) used with respect to CAIR NO_X allowance allocations under paragraph (b) of this section for each CAIR NO_X unit will be:

(i) For units commencing operation before January 1, 2001 the average of the 3 highest amounts of the unit's adjusted control period heat input for 2000 through 2004, with the adjusted control period heat input for each year calculated as follows:

(A) If the unit is coal-fired during the year, the unit's control period heat input for such year is multiplied by 100 percent;

(B) If the unit is oil-fired during the year, the unit's control period heat input for such year is multiplied by 60 percent; and

(C) If the unit is not subject to paragraph (a)(1)(i)(A) or (B) of this section, the unit's control period heat input for such year is multiplied by 40 percent.

(ii) For units commencing operation on or after January 1, 2001 and operating each calendar year during a period of 5 or more consecutive calendar years, the average of the 3 highest amounts of the unit's total converted control period heat input over the first such 5 years.

(2)(i) A unit's control period heat input, and a unit's status as coal-fired or oil-fired, for a calendar year under paragraph (a)(1)(i) of this section, and a unit's total tons of NO_X emissions during a calendar year under paragraph (c)(3) of this section, will be determined in accordance with part 75 of this chapter, to the extent the unit was otherwise subject to the requirements

of part 75 of this chapter for the year, or will be based on the best available data reported to the permitting authority for the unit, to the extent the unit was not otherwise subject to the requirements of part 75 of this chapter for the year.

(ii) A unit's converted control period heat input for a calendar year specified under paragraph (a)(1)(ii) of this section equals:

(A) Except as provided in paragraph (a)(2)(ii)(B) or (C) of this section, the control period gross electrical output of the generator or generators served by the unit multiplied by 7,900 Btu/kWh, if the unit is coal-fired for the year, or 6,675 Btu/kWh, if the unit is not coal-fired for the year, and divided by 1,000,000 Btu/mmBtu, provided that if a generator is served by 2 or more units, then the gross electrical output of the generator will be attributed to each unit in proportion to the unit's share of the total control period heat input of such units for the year;

(B) For a unit that is a boiler and has equipment used to produce electricity and useful thermal energy for industrial, commercial, heating, or cooling purposes through the sequential use of energy, the total heat energy (in Btu) of the steam produced by the boiler during the control period, divided by 0.8 and by 1,000,000 Btu/mmBtu; or

(C) For a unit that is a combustion turbine and has equipment used to produce electricity and useful thermal energy for industrial, commercial, heating, or cooling purposes through the sequential use of energy, the control period gross electrical output of the enclosed device comprising the compressor, combustor, and turbine multiplied by 3,413 Btu/kWh, plus the total heat energy (in Btu) of the steam produced by any associated heat recovery steam generator during the control period divided by 0.8, and with the sum divided by 1,000,000 Btu/mmBtu.

(b)(1) For each control period in 2009 and thereafter, the permitting authority will allocate to all CAIR NO_X units in the State that have a baseline heat input (as determined under paragraph (a) of this section) a total amount of CAIR NO_X allowances equal to 95 percent for a control period during 2009 through 2014, and 97 percent for a control period during 2015 and thereafter, of the tons of NO_X emissions in the State trading budget under § 96.140 (except as provided in paragraph (d) of this section).

(2) The permitting authority will allocate CAIR NO_X allowances to each CAIR NO_X unit under paragraph (b)(1) of this section in an amount determined by multiplying the total amount of CAIR NO_X allowances allocated under paragraph (b)(1) of this section by the ratio of the baseline heat input of such CAIR NO_X unit to the total amount of baseline heat input of all such CAIR NO_X units in the State and rounding to the nearest whole allowance as appropriate.

(c) For each control period in 2009 and thereafter, the permitting authority will allocate CAIR NO_X allowances to CAIR NO_X units in a State that are not allocated CAIR NO_X allowances under paragraph (b) of this section because the units do not yet have a baseline heat input under paragraph (a) of this section or because the units have a baseline heat input but all CAIR NO_X allowances available under paragraph (b) of this section for the control period are already allocated, in accordance with the following procedures:

(1) The permitting authority will establish a separate new unit set-aside for each control period. Each new unit set-aside will be allocated CAIR NO_X allowances equal to 5 percent for a control period in 2009 through 2014, and 3 percent for a control period in 2015and thereafter, of the amount of tons of NO_X emissions in the State trading budget under § 96.140.

(2) The CAIR designated representative of such a CAIR NO_X unit may submit to the permitting authority a request, in a format specified by the permitting authority, to be allocated CAIR NO_X allowances, starting with the later of the control period in 2009 or the first control period after the control period in which the CAIR NO_X unit commences commercial operation and until the first control period for which the unit is allocated CAIR NO_X allowances under paragraph (b) of this section. A separate CAIR NO_X allowance allocation request for each control period for which CAIR NO_X allowances are sought must be submitted on

or before May 1 of such control period and after the date on which the CAIR NO_X unit commences commercial operation.

(3) In a CAIR NO_X allowance allocation request under paragraph (c)(2) of this section, the CAIR designated representative may request for a control period CAIR NO_X allowances in an amount not exceeding the CAIR NO_X unit's total tons of NO_X emissions during the calendar year immediately before such control period.

(4) The permitting authority will review each CAIR NO_X allowance allocation request under paragraph (c)(2) of this section and will allocate CAIR NO_X allowances for each control period pursuant to such request as follows:

(i) The permitting authority will accept an allowance allocation request only if the request meets, or is adjusted by the permitting authority as necessary to meet, the requirements of paragraphs (c)(2) and (3) of this section.

(ii) On or after May 1 of the control period, the permitting authority will determine the sum of the CAIR NO_X allowances requested (as adjusted under paragraph (c)(4)(i) of this section) in all allowance allocation requests accepted under paragraph (c)(4)(i) of this section for the control period.

(iii) If the amount of CAIR NO_X allowances in the new unit set-aside for the control period is greater than or equal to the sum under paragraph (c)(4)(ii) of this section, then the permitting authority will allocate the amount of CAIR NO_X allowances requested (as adjusted under paragraph (c)(4)(i) of this section) to each CAIR NO_X unit covered by an allowance allocation request accepted under paragraph (c)(4)(i) of this section.

(iv) If the amount of CAIR NO_X allowances in the new unit set-aside for the control period is less than the sum under paragraph (c)(4)(ii) of this section, then the permitting authority will allocate to each CAIR NO_X unit covered by an allowance allocation request accepted under paragraph (c)(4)(i) of this section the amount of the CAIR NO_X allowances requested (as adjusted under paragraph (c)(4)(i) of this section), multiplied by the amount of CAIR NO_X allowances in the new unit set-aside for the control period, divided by the sum determined under paragraph (c)(4)(ii) of this section, and rounded to the nearest whole allowance as appropriate.

(v) The permitting authority will notify each CAIR designated representative that submitted an allowance allocation request of the amount of CAIR NO_X allowances (if any) allocated for the control period to the CAIR NO_X unit covered by the request.

(d) If, after completion of the procedures under paragraph (c)(4) of this section for a control period, any unallocated CAIR NO_X allowances remain in the new unit set-aside for the control period, the permitting authority will allocate to each CAIR NO_X unit that was allocated CAIR NO_X allowances under paragraph (b) of this section an amount of CAIR NO_X allowances equal to the total amount of such remaining unallocated CAIR NO_X allowances, multiplied by the unit's allocation under paragraph (b) of this section, divided by 95 percent for a control period during 2009 through 2014, and 97 percent for a control period during 2015 and thereafter, of the amount of tons of NO_X emissions in the State trading budget under § 96.140, and rounded to the nearest whole allowance as appropriate.

[70 FR 25339, May 12, 2005, as amended at 71 FR 25383, Apr. 28, 2006]

§ 96.143 Compliance supplement pool.

(a) In addition to the CAIR NO_X allowances allocated under § 96.142, the permitting authority may allocate for the control period in 2009 up to the following amount of CAIR NO_X allowances to CAIR NO_X units in the respective State:

State	Compliance supplement pool
Alabama	10,166
Delaware	843
District Of Columbia	0
Florida	8,335
Georgia	12,397
Illinois	11,299
Indiana	20,155
Iowa	6,978
Kentucky	14,935
Louisiana	2,251
Maryland	4,670
Michigan	8,347
Minnesota	6,528
Mississippi	3,066
Missouri	9,044

State	Compliance supplement pool
New Jersey	660
New York	0
North Carolina	0
Ohio	25,037
Pennsylvania	16,009
South Carolina	2,600
Tennessee	8,944
Texas	772
Virginia	5,134
West Virginia	16,929
Wisconsin	4,898

(b) For any CAIR NO_X unit in the State that achieves NO_X emission reductions in 2007 and 2008 that are not necessary to comply with any State or federal emissions limitation applicable during such years, the CAIR designated representative of the unit may request early reduction credits, and allocation of CAIR NO_X allowances from the compliance supplement pool under paragraph (a) of this section for such early reduction credits, in accordance with the following:

(1) The owners and operators of such CAIR NO_X unit shall monitor and report the NO_X emissions rate and the heat input of the unit in accordance with subpart HH of this part in each control period for which early reduction credit is requested.

(2) The CAIR designated representative of such CAIR NO_X unit shall submit to the permitting authority by May 1, 2009 a request, in a format specified by the permitting authority, for allocation of an amount of CAIR NO_X allowances from the compliance supplement pool not exceeding the sum of the amounts (in tons) of the unit's NO_X emission reductions in 2007 and 2008 that are not necessary to comply with any State or federal emissions limitation applicable during such years, determined in accordance with subpart HH of this part.

(c) For any CAIR NO_X unit in the State whose compliance with the CAIR NO_X emissions limitation for the control period in 2009 would create an undue risk to the reliability of electricity supply during such control period, the CAIR designated representative of the unit may request the allocation of CAIR NO_X allowances from the compliance supplement pool under paragraph (a) of this section, in accordance with the following:

(1) The CAIR designated representative of such CAIR NO_X unit shall submit to the permitting authority by May 1, 2009 a request, in a format specified by the permitting authority, for allocation of an amount of CAIR NO_X allowances from the compliance supplement pool not exceeding the minimum amount of CAIR NO_X allowances necessary to remove such undue risk to the reliability of electricity supply.

(2) In the request under paragraph (c)(1) of this section, the CAIR designated representative of such CAIR NO_X unit shall demonstrate that, in the absence of allocation to the unit of the amount of CAIR NO_X allowances requested, the unit's compliance with the CAIR NO_X emissions limitation for the control period in 2009 would create an undue risk to the reliability of electricity supply during such control period. This demonstration must include a showing that it would not be feasible for the owners and operators of the unit to:

(i) Obtain a sufficient amount of electricity from other electricity generation facilities, during the installation of control technology at the unit for compliance with the CAIR NO_X emissions limitation, to prevent such undue risk; or

(ii) Obtain under paragraphs (b) and (d) of this section, or otherwise obtain, a sufficient amount of CAIR NO_X allowances to prevent such undue risk.

(d) The permitting authority will review each request under paragraph (b) or (c) of this section submitted by May 1, 2009 and will allocate CAIR NO_X allowances for the control period in 2009 to CAIR NO_X units in the State and covered by such request as follows:

(1) Upon receipt of each such request, the permitting authority will make any necessary adjustments to the request to ensure that the amount of the CAIR NO_X allowances requested meets the requirements of paragraph (b) or (c) of this section.

(2) If the State's compliance supplement pool under paragraph (a) of this section has an amount of CAIR NO_X allowances not less than the total amount of CAIR NO_X allowances in all such requests (as adjusted under paragraph (d)(1) of this section), the permitting authority will allocate to each

CAIR NO_X unit covered by such requests the amount of CAIR NO_X allowances requested (as adjusted under paragraph (d)(1) of this section).

(3) If the State's compliance supplement pool under paragraph (a) of this section has a smaller amount of CAIR NO_X allowances than the total amount of CAIR NO_X allowances in all such requests (as adjusted under paragraph (d)(1) of this section), the permitting authority will allocate CAIR NO_X allowances to each CAIR NO_X unit covered by such requests according to the following formula and rounding to the nearest whole allowance as appropriate:

Unit's allocation = Unit's adjusted allocation × (State's compliance supplement pool ÷ Total adjusted allocations for all units)

Where:

'Unit's allocation' is the amount of CAIR NO_X allowances allocated to the unit from the State's compliance supplement pool. Unit's adjusted allocation'' is the amount of CAIR NO_X allowances requested for the unit under paragraph (b) or (c) of this section, as adjusted under paragraph (d)(1) of this section. ''State's compliance supplement pool'' is the amount of CAIR NO_X allowances in the State's compliance supplement pool. ''Total adjusted allocations for all units'' is the sum of the amounts of allocations requested for all units under paragraph (b) or (c) of this section, as adjusted under paragraph (d)(1) of this section.

(4) By November 30, 2009, the permitting authority will determine, and submit to the Administrator, the allocations under paragraph (d)(2) or (3)of this section.

(5) By January 1, 2010, the Administrator will record the allocations under paragraph (d)(4) of this section.

[70 FR 25339, May 12, 2005, as amended at 71 FR 25302 and 25383, Apr. 28, 2006; 71 FR 74794, Dec. 13, 2006]

Subpart FF—CAIR NO_X Allowance Tracking System

SOURCE: 70 FR 25339, May 12, 2005, unless otherwise noted.

§ 96.150 [Reserved]

§ 96.151 Establishment of accounts.

(a) *Compliance accounts.* Except as provided in § 96.184(e), upon receipt of a complete certificate of representation under § 96.113, the Administrator will establish a compliance account for the CAIR NO_X source for which the certificate of representation was submitted unless the source already has a compliance account.

(b) *General accounts*—(1) *Application for general account.* (i) Any person may apply to open a general account for the purpose of holding and transferring CAIR NO_X allowances. An application for a general account may designate one and only one CAIR authorized account representative and one and only one alternate CAIR authorized account representative who may act on behalf of the CAIR authorized account representative. The agreement by which the alternate CAIR authorized account representative is selected shall include a procedure for authorizing the alternate CAIR authorized account representative to act in lieu of the CAIR authorized account representative.

(ii) A complete application for a general account shall be submitted to the Administrator and shall include the following elements in a format prescribed by the Administrator:

(A) Name, mailing address, e-mail address (if any), telephone number, and facsimile transmission number (if any) of the CAIR authorized account representative and any alternate CAIR authorized account representative;

(B) Organization name and type of organization, if applicable;

(C) A list of all persons subject to a binding agreement for the CAIR authorized account representative and any alternate CAIR authorized account representative to represent their ownership interest with respect to the CAIR NO_X allowances held in the general account;

(D) The following certification statement by the CAIR authorized account representative and any alternate CAIR authorized account representative: ''I certify that I was selected as the CAIR authorized account representative or the alternate CAIR authorized account representative, as applicable, by an

agreement that is binding on all persons who have an ownership interest with respect to CAIR NO_X allowances held in the general account. I certify that I have all the necessary authority to carry out my duties and responsibilities under the CAIR NO_X Annual Trading Program on behalf of such persons and that each such person shall be fully bound by my representations, actions, inactions, or submissions and by any order or decision issued to me by the Administrator or a court regarding the general account.''

(E) The signature of the CAIR authorized account representative and any alternate CAIR authorized account representative and the dates signed.

(iii) Unless otherwise required by the permitting authority or the Administrator, documents of agreement referred to in the application for a general account shall not be submitted to the permitting authority or the Administrator. Neither the permitting authority nor the Administrator shall be under any obligation to review or evaluate the sufficiency of such documents, if submitted.

(2) *Authorization of CAIR authorized account representative and alternate CAIR authorized account representative.* (i) Upon receipt by the Administrator of a complete application for a general account under paragraph (b)(1) of this section:

(A) The Administrator will establish a general account for the person or persons for whom the application is submitted.

(B) The CAIR authorized account representative and any alternate CAIR authorized account representative for the general account shall represent and, by his or her representations, actions, inactions, or submissions, legally bind each person who has an ownership interest with respect to CAIR NO_X allowances held in the general account in all matters pertaining to the CAIR NO_X Annual Trading Program, notwithstanding any agreement between the CAIR authorized account representative or any alternate CAIR authorized account representative and such person. Any such person shall be bound by any order or decision issued to the CAIR authorized account representative or any alternate CAIR authorized account representative by the Administrator or a court regarding the general account.

(C) Any representation, action, inaction, or submission by any alternate CAIR authorized account representative shall be deemed to be a representation, action, inaction, or submission by the CAIR authorized account representative.

(ii) Each submission concerning the general account shall be submitted, signed, and certified by the CAIR authorized account representative or any alternate CAIR authorized account representative for the persons having an ownership interest with respect to CAIR NO_X allowances held in the general account. Each such submission shall include the following certification statement by the CAIR authorized account representative or any alternate CAIR authorized account representative: ''I am authorized to make this submission on behalf of the persons having an ownership interest with respect to the CAIR NO_X allowances held in the general account. I certify under penalty of law that I have personally examined, and am familiar with, the statements and information submitted in this document and all its attachments. Based on my inquiry of those individuals with primary responsibility for obtaining the information, I certify that the statements and information are to the best of my knowledge and belief true, accurate, and complete. I am aware that there are significant penalties for submitting false statements and information or omitting required statements and information, including the possibility of fine or imprisonment.''

(iii) The Administrator will accept or act on a submission concerning the general account only if the submission has been made, signed, and certified in accordance with paragraph (b)(2)(ii) of this section.

(3) *Changing CAIR authorized account representative and alternate CAIR authorized account representative; changes in persons with ownership interest.* (i) The CAIR authorized account representative for a general account may be changed at any time upon receipt by the Administrator of a superseding

complete application for a general account under paragraph (b)(1) of this section. Notwithstanding any such change, all representations, actions, inactions, and submissions by the previous CAIR authorized account representative before the time and date when the Administrator receives the superseding application for a general account shall be binding on the new CAIR authorized account representative and the persons with an ownership interest with respect to the CAIR NO_X allowances in the general account.

(ii) The alternate CAIR authorized account representative for a general account may be changed at any time upon receipt by the Administrator of a superseding complete application for a general account under paragraph (b)(1) of this section. Notwithstanding any such change, all representations, actions, inactions, and submissions by the previous alternate CAIR authorized account representative before the time and date when the Administrator receives the superseding application for a general account shall be binding on the new alternate CAIR authorized account representative and the persons with an ownership interest with respect to the CAIR NO_X allowances in the general account.

(iii)(A) In the event a person having an ownership interest with respect to CAIR NO_X allowances in the general account is not included in the list of such persons in the application for a general account, such person shall be deemed to be subject to and bound by the application for a general account, the representation, actions, inactions, and submissions of the CAIR authorized account representative and any alternate CAIR authorized account representative of the account, and the decisions and orders of the Administrator or a court, as if the person were included in such list.

(B) Within 30 days following any change in the persons having an ownership interest with respect to CAIR NO_X allowances in the general account, including the addition of a new person, the CAIR authorized account representative or any alternate CAIR authorized account representative shall submit a revision to the application for a general account amending the list of persons having an ownership interest with respect to the CAIR NO_X allowances in the general account to include the change.

(4) *Objections concerning CAIR authorized account representative and alternate CAIR authorized account representative.* (i) Once a complete application for a general account under paragraph (b)(1) of this section has been submitted and received, the Administrator will rely on the application unless and until a superseding complete application for a general account under paragraph (b)(1) of this section is received by the Administrator.

(ii) Except as provided in paragraph (b)(3)(i) or (ii) of this section, no objection or other communication submitted to the Administrator concerning the authorization, or any representation, action, inaction, or submission of the CAIR authorized account representative or any alternate CAIR authorized account representative for a general account shall affect any representation, action, inaction, or submission of the CAIR authorized account representative or any alternate CAIR authorized account representative or the finality of any decision or order by the Administrator under the CAIR NO_X Annual Trading Program.

(iii) The Administrator will not adjudicate any private legal dispute concerning the authorization or any representation, action, inaction, or submission of the CAIR authorized account representative or any alternate CAIR authorized account representative for a general account, including private legal disputes concerning the proceeds of CAIR NO_X allowance transfers.

(c) *Account identification.* The Administrator will assign a unique identifying number to each account established under paragraph (a) or (b) of this section.

(5) *Delegation by CAIR authorized account representative and alternate CAIR authorized account representative.* (i) A CAIR authorized account representative may delegate, to one or more natural persons, his or her authority to make an electronic submission to the Administrator provided for or required under subparts FF and GG of this part.

(ii) An alternate CAIR authorized account representative may delegate, to one or more natural persons, his or her authority to make an electronic submission to the Administrator provided for or required under subparts FF and GG of this part.

(iii) In order to delegate authority to make an electronic submission to the Administrator in accordance with paragraph (b)(5)(i) or (ii) of this section, the CAIR authorized account representative or alternate CAIR authorized account representative, as appropriate, must submit to the Administrator a notice of delegation, in a format prescribed by the Administrator, that includes the following elements:

(A) The name, address, e-mail address, telephone number, and facsimile transmission number (if any) of such CAIR authorized account representative or alternate CAIR authorized account representative;

(B) The name, address, e-mail address, telephone number, and, facsimile transmission number (if any) of each such natural person (referred to as an ''agent'');

(C) For each such natural person, a list of the type or types of electronic submissions under paragraph (b)(5)(i) or (ii) of this section for which authority is delegated to him or her;

(D) The following certification statement by such CAIR authorized account representative or alternate CAIR authorized account representative: ''I agree that any electronic submission to the Administrator that is by an agent identified in this notice of delegation and of a type listed for such agent in this notice of delegation and that is made when I am a CAIR authorized account representative or alternate CAIR authorized representative, as appropriate, and before this notice of delegation is superseded by another notice of delegation under 40 CFR 96.151(b)(5)(iv) shall be deemed to be an electronic submission by me.''; and

(E) The following certification statement by such CAIR authorized account representative or alternate CAIR authorized account representative: ''Until this notice of delegation is superseded by another notice of delegation under 40 CFR 96.151 (b)(5)(iv), I agree to maintain an e-mail account and to notify the Administrator immediately of any change in my e-mail address unless all delegation of authority by me under 40 CFR 96.151 (b)(5) is terminated.''

(iv) A notice of delegation submitted under paragraph (b)(5)(iii) of this section shall be effective, with regard to the CAIR authorized account representative or alternate CAIR authorized account representative identified in such notice, upon receipt of such notice by the Administrator and until receipt by the Administrator of a superseding notice of delegation submitted by such CAIR authorized account representative or alternate CAIR authorized account representative, as appropriate. The superseding notice of delegation may replace any previously identified agent, add a new agent, or eliminate entirely any delegation of authority.

(v) Any electronic submission covered by the certification in paragraph (b)(5)(iii)(D) of this section and made in accordance with a notice of delegation effective under paragraph (b)(5)(iv) of this section shall be deemed to be an electronic submission by the CAIR designated representative or alternate CAIR designated representative submitting such notice of delegation.

[70 FR 25339, May 12, 2005, as amended at 71 FR 25383, Apr. 28, 2006; 71 FR 74794, Dec. 13, 2006]

§ 96.152 Responsibilities of CAIR authorized account representative.

Following the establishment of a CAIR NO_X Allowance Tracking System account, all submissions to the Administrator pertaining to the account, including, but not limited to, submissions concerning the deduction or transfer of CAIR NO_X allowances in the account, shall be made only by the CAIR authorized account representative for the account.

§ 96.153 Recordation of CAIR NO_X allowance allocations.

(a) By September 30, 2007, the Administrator will record in the CAIR NO_X source's compliance account the CAIR NO_X allowances allocated for the CAIR NO_X units at the source, as submitted

by the permitting authority in accordance with § 96.141(a), for the control periods in 2009, 2010, 2011, 2012, 2013, and 2014.

(b) By December 1, 2009, the Administrator will record in the CAIR NO_X source's compliance account the CAIR NO_X allowances allocated for the CAIR NO_X units at the source, as submitted by the permitting authority in accordance with § 96.141(b), for the control period in 2015.

(c) By December 1, 2009 and December 1 of each year thereafter, the Administrator will record in the CAIR NO_X source's compliance account the CAIR NO_X allowances allocated for the CAIR NO_X units at the source, as submitted by the permitting authority in accordance with § 96.141(b), for the control period in the sixth year after the year of the applicable deadline for recordation under this paragraph.

(d) By December 1, 2009 and December 1 of each year thereafter, the Administrator will record in the CAIR NO_X source's compliance account the CAIR NO_X allowances allocated for the CAIR NO_X units at the source, as submitted by the permitting authority or determined by the Administrator in accordance with § 96.141(c), for the control period in the year of the applicable deadline for recordation under this paragraph.

(e) *Serial numbers for allocated CAIR NO_X allowances. When recording the allocation of CAIR NO_X* allowances for a CAIR NO_X unit in a compliance account, the Administrator will assign each CAIR NO_X allowance a unique identification number that will include digits identifying the year of the control period for which the CAIR NO_X allowance is allocated.

[70 FR 25339, May 12, 2005, as amended at 71 FR 25384, Apr. 28, 2006]

EDITORIAL NOTE: At 71 FR 25384, Apr. 28, 2006, § 196.153 was amended; however, the amendment could not be incorporated due to inaccurate amendatory instruction.

§ 96.154 Compliance with CAIR NO_X emissions limitation.

(a) *Allowance transfer deadline.* The CAIR NO_X allowances are available to be deducted for compliance with a source's CAIR NO_X emissions limitation for a control period in a given calendar year only if the CAIR NO_X allowances:

(1) Were allocated for the control period in the year or a prior year; and

(2) Are held in the compliance account as of the allowance transfer deadline for the control period or are transferred into the compliance account by a CAIR NO_X allowance transfer correctly submitted for recordation under §§ 96.160 and 96.161 by the allowance transfer deadline for the control period.

(b) *Deductions for compliance.* Following the recordation, in accordance with § 96.161, of CAIR NO_X allowance transfers submitted for recordation in a source's compliance account by the allowance transfer deadline for a control period, the Administrator will deduct from the compliance account CAIR NO_X allowances available under paragraph (a) of this section in order to determine whether the source meets the CAIR NO_X emissions limitation for the control period, as follows:

(1) Until the amount of CAIR NO_X allowances deducted equals the number of tons of total nitrogen oxides emissions, determined in accordance with subpart HH of this part, from all CAIR NO_X units at the source for the control period; or

(2) If there are insufficient CAIR NO_X allowances to complete the deductions in paragraph (b)(1) of this section, until no more CAIR NO_X allowances available under paragraph (a) of this section remain in the compliance account.

(c)(1) *Identification of CAIR NO_X allowances by serial number. The CAIR authorized account representative for a source's compliance account may request that specific CAIR NO_X* allowances, identified by serial number, in the compliance account be deducted for emissions or excess emissions for a control period in accordance with paragraph (b) or (d) of this section. Such request shall be submitted to the Administrator by the allowance transfer deadline for the control period and include, in a format prescribed by the Administrator, the identification of the CAIR NO_X source and the appropriate serial numbers.

(2) *First-in, first-out.* The Administrator will deduct CAIR NO_X allowances under paragraph (b) or (d) of this section from the source's compliance

account, in the absence of an identification or in the case of a partial identification of CAIR NO_X allowances by serial number under paragraph (c)(1) of this section, on a first-in, first-out (FIFO) accounting basis in the following order:

(i) Any CAIR NO_X allowances that were allocated to the units at the source, in the order of recordation; and then

(ii) Any CAIR NO_X allowances that were allocated to any entity and transferred and recorded in the compliance account pursuant to subpart GG of this part, in the order of recordation.

(d) *Deductions for excess emissions.* (1) After making the deductions for compliance under paragraph (b) of this section for a control period in a calendar year in which the CAIR NO_X source has excess emissions, the Administrator will deduct from the source's compliance account an amount of CAIR NO_X allowances, allocated for the control period in the immediately following calendar year, equal to 3 times the number of tons of the source's excess emissions.

(2) Any allowance deduction required under paragraph (d)(1) of this section shall not affect the liability of the owners and operators of the CAIR NO_X source or the CAIR NO_X units at the source for any fine, penalty, or assessment, or their obligation to comply with any other remedy, for the same violations, as ordered under the Clean Air Act or applicable State law.

(e) *Recordation of deductions.* The Administrator will record in the appropriate compliance account all deductions from such an account under paragraphs (b) and (d) of this section and subpart II.

(f) *Administrator's action on submissions.* (1) The Administrator may review and conduct independent audits concerning any submission under the CAIR NO_X Annual Trading Program and make appropriate adjustments of the information in the submissions.

(2) The Administrator may deduct CAIR NO_X allowances from or transfer CAIR NO_X allowances to a source's compliance account based on the information in the submissions, as adjusted under paragraph (f)(1) of this section, and record such deductions and transfers.

[70 FR 25339, May 12, 2005, as amended at 71 FR 25384, Apr. 28, 2006]

§ 96.155 Banking.

(a) CAIR NO_X allowances may be banked for future use or transfer in a compliance account or a general account in accordance with paragraph (b) of this section.

(b) Any CAIR NO_X allowance that is held in a compliance account or a general account will remain in such account unless and until the CAIR NO_X allowance is deducted or transferred under § 96.154, § 96.156, or subpart GG or II of this part.

[70 FR 25339, May 12, 2005, as amended at 71 FR 25384, Apr. 28, 2006]

§ 96.156 Account error.

The Administrator may, at his or her sole discretion and on his or her own motion, correct any error in any CAIR NO_X Allowance Tracking System account. Within 10 business days of making such correction, the Administrator will notify the CAIR authorized account representative for the account.

§ 96.157 Closing of general accounts.

(a) The CAIR authorized account representative of a general account may submit to the Administrator a request to close the account, which shall include a correctly submitted allowance transfer under §§ 96.160 and 96.161 for any CAIR NO_X allowances in the account to one or more other CAIR NO_X Allowance Tracking System accounts.

(b) If a general account has no allowance transfers in or out of the account for a 12-month period or longer and does not contain any CAIR NO_X allowances, the Administrator may notify the CAIR authorized account representative for the account that the account will be closed following 20 business days after the notice is sent. The account will be closed after the 20-day period unless, before the end of the 20-day period, the Administrator receives a correctly submitted transfer of CAIR NO_X allowances into the account under §§ 96.160 and 96.161 or a statement submitted by the CAIR authorized account representative demonstrating to the

satisfaction of the Administrator good cause as to why the account should not be closed.

[70 FR 25339, May 12, 2005, as amended at 71 FR 25384, Apr. 28, 2006]

Subpart GG—CAIR NO_X Allowance Transfers

SOURCE: 70 FR 25339, May 12, 2005, unless otherwise noted.

§ 96.160 Submission of CAIR NO_X allowance transfers.

A CAIR authorized account representative seeking recordation of a CAIR NO_X allowance transfer shall submit the transfer to the Administrator. To be considered correctly submitted, the CAIR NO_X allowance transfer shall include the following elements, in a format specified by the Administrator:

(a) The account numbers for both the transferor and transferee accounts;

(b) The serial number of each CAIR NO_X allowance that is in the transferor account and is to be transferred; and

(c) The name and signature of the CAIR authorized account representative of the transferor account and the date signed.

§ 96.161 EPA recordation.

(a) Within 5 business days (except as provided in paragraph (b) of this section) of receiving a CAIR NO_X allowance transfer, the Administrator will record a CAIR NO_X allowance transfer by moving each CAIR NO_X allowance from the transferor account to the transferee account as specified by the request, provided that:

(1) The transfer is correctly submitted under § 96.160; and

(2) The transferor account includes each CAIR NO_X allowance identified by serial number in the transfer.

(b) A CAIR NO_X allowance transfer that is submitted for recordation after the allowance transfer deadline for a control period and that includes any CAIR NO_X allowances allocated for any control period before such allowance transfer deadline will not be recorded until after the Administrator completes the deductions under § 96.154 for the control period immediately before such allowance transfer deadline.

(c) Where a CAIR NO_X allowance transfer submitted for recordation fails to meet the requirements of paragraph (a) of this section, the Administrator will not record such transfer.

§ 96.162 Notification.

(a) *Notification of recordation.* Within 5 business days of recordation of a CAIR NO_X allowance transfer under § 96.161, the Administrator will notify the CAIR authorized account representatives of both the transferor and transferee accounts.

(b) *Notification of non-recordation.* Within 10 business days of receipt of a CAIR NO_X allowance transfer that fails to meet the requirements of § 96.161(a), the Administrator will notify the CAIR authorized account representatives of both accounts subject to the transfer of:

(1) A decision not to record the transfer, and

(2) The reasons for such non-recordation.

(c) Nothing in this section shall preclude the submission of a CAIR NO_X allowance transfer for recordation following notification of non-recordation.

Subpart HH—Monitoring and Reporting

SOURCE: 70 FR 25339, May 12, 2005, unless otherwise noted.

§ 96.170 General requirements.

The owners and operators, and to the extent applicable, the CAIR designated representative, of a CAIR NO_X unit, shall comply with the monitoring, recordkeeping, and reporting requirements as provided in this subpart and in subpart H of part 75 of this chapter. For purposes of complying with such requirements, the definitions in § 96.102 and in § 72.2 of this chapter shall apply, and the terms ''affected unit,'' ''designated representative,'' and ''continuous emission monitoring system'' (or ''CEMS'') in part 75 of this chapter shall be deemed to refer to the terms ''CAIR NO_X unit,'' ''CAIR designated representative,'' and ''continuous emission monitoring system'' (or ''CEMS'') respectively, as defined in § 96.102. The owner or operator of a unit that is not a CAIR NO_X unit but that is monitored

under § 75.72(b)(2)(ii) of this chapter shall comply with the same monitoring, recordkeeping, and reporting requirements as a CAIR NO_X unit.

(a) *Requirements for installation, certification, and data accounting.* The owner or operator of each CAIR NO_X unit shall:

(1) Install all monitoring systems required under this subpart for monitoring NO_X mass emissions and individual unit heat input (including all systems required to monitor NO_X emission rate, NO_X concentration, stack gas moisture content, stack gas flow rate, CO_2 or O_2 concentration, and fuel flow rate, as applicable, in accordance with §§ 75.71 and 75.72 of this chapter);

(2) Successfully complete all certification tests required under § 96.171 and meet all other requirements of this subpart and part 75 of this chapter applicable to the monitoring systems under paragraph (a)(1) of this section; and

(3) Record, report, and quality-assure the data from the monitoring systems under paragraph (a)(1) of this section.

(b) *Compliance deadlines.* Except as provided in paragraph (e) of this section, the owner or operator shall meet the monitoring system certification and other requirements of paragraphs (a)(1) and (2) of this section on or before the following dates. The owner or operator shall record, report, and quality-assure the data from the monitoring systems under paragraph (a)(1) of this section on and after the following dates.

(1) For the owner or operator of a CAIR NO_X unit that commences commercial operation before July 1, 2007, by January 1, 2008.

(2) For the owner or operator of a CAIR NO_X unit that commences commercial operation on or after July 1, 2007, by the later of the following dates:

(i) January 1, 2008; or

(ii) 90 unit operating days or 180 calendar days, whichever occurs first, after the date on which the unit commences commercial operation.

(3) For the owner or operator of a CAIR NO_X unit for which construction of a new stack or flue or installation of add-on NO_X emission controls is completed after the applicable deadline under paragraph (b)(1), (2), (4), or (5) of this section, by 90 unit operating days or 180 calendar days, whichever occurs first, after the date on which emissions first exit to the atmosphere through the new stack or flue or add-on NO_X emissions controls.

(4) Notwithstanding the dates in paragraphs (b)(1) and (2) of this section, for the owner or operator of a unit for which a CAIR opt-in permit application is submitted and not withdrawn and a CAIR opt-in permit is not yet issued or denied under subpart II of this part, by the date specified in § 96.184(b).

(5) Notwithstanding the dates in paragraphs (b)(1) and (2) of this section, for the owner or operator of a CAIR NO_X opt-in unit under subpart II of this part, by the date on which the CAIR NO_X opt-in unit enters the CAIR NO_X Annual Trading Program as provided in § 96.184(g).

(c) *Reporting data.* The owner or operator of a CAIR NO_X unit that does not meet the applicable compliance date set forth in paragraph (b) of this section for any monitoring system under paragraph (a)(1) of this section shall, for each such monitoring system, determine, record, and report maximum potential (or, as appropriate, minimum potential) values for NO_X concentration, NO_X emission rate, stack gas flow rate, stack gas moisture content, fuel flow rate, and any other parameters required to determine NO_X mass emissions and heat input in accordance with § 75.31(b)(2) or (c)(3) of this chapter, section 2.4 of appendix D to part 75 of this chapter, or section 2.5 of appendix E to part 75 of this chapter, as applicable.

(d) *Prohibitions.* (1) No owner or operator of a CAIR NO_X unit shall use any alternative monitoring system, alternative reference method, or any other alternative to any requirement of this subpart without having obtained prior written approval in accordance with § 96.175.

(2) No owner or operator of a CAIR NO_X unit shall operate the unit so as to discharge, or allow to be discharged, NO_X emissions to the atmosphere without accounting for all such emissions in accordance with the applicable provisions of this subpart and part 75 of this chapter.

(3) No owner or operator of a CAIR NO_X unit shall disrupt the continuous emission monitoring system, any portion thereof, or any other approved emission monitoring method, and thereby avoid monitoring and recording NO_X mass emissions discharged into the atmosphere or heat input, except for periods of recertification or periods when calibration, quality assurance testing, or maintenance is performed in accordance with the applicable provisions of this subpart and part 75 of this chapter.

(4) No owner or operator of a CAIR NO_X unit shall retire or permanently discontinue use of the continuous emission monitoring system, any component thereof, or any other approved monitoring system under this subpart, except under any one of the following circumstances:

(i) During the period that the unit is covered by an exemption under § 96.105 that is in effect;

(ii) The owner or operator is monitoring emissions from the unit with another certified monitoring system approved, in accordance with the applicable provisions of this subpart and part 75 of this chapter, by the permitting authority for use at that unit that provides emission data for the same pollutant or parameter as the retired or discontinued monitoring system; or

(iii) The CAIR designated representative submits notification of the date of certification testing of a replacement monitoring system for the retired or discontinued monitoring system in accordance with § 96.171(d)(3)(i).

(e) *Long-term cold storage*. The owner or operator of a CAIR NO_X unit is subject to the applicable provisions of part 75 of this chapter concerning units in long-term cold storage.

[70 FR 25339, May 12, 2005, as amended at 71 FR 25384, Apr. 28, 2006]

§ 96.171 Initial certification and recertification procedures.

(a) The owner or operator of a CAIR NO_X unit shall be exempt from the initial certification requirements of this section for a monitoring system under § 96.170(a)(1) if the following conditions are met:

(1) The monitoring system has been previously certified in accordance with part 75 of this chapter; and

(2) The applicable quality-assurance and quality-control requirements of § 75.21 of this chapter and appendix B, appendix D, and appendix E to part 75 of this chapter are fully met for the certified monitoring system described in paragraph (a)(1) of this section.

(b) The recertification provisions of this section shall apply to a monitoring system under § 96.170(a)(1) exempt from initial certification requirements under paragraph (a) of this section.

(c) If the Administrator has previously approved a petition under § 75.17(a) or (b) of this chapter for apportioning the NO_X emission rate measured in a common stack or a petition under § 75.66 of this chapter for an alternative to a requirement in § 75.12 or § 75.17 of this chapter, the CAIR designated representative shall resubmit the petition to the Administrator under § 96.175(a) to determine whether the approval applies under the CAIR NO_X Annual Trading Program.

(d) Except as provided in paragraph (a) of this section, the owner or operator of a CAIR NO_X unit shall comply with the following initial certification and recertification procedures for a continuous monitoring system (*i.e.*, a continuous emission monitoring system and an excepted monitoring system under appendices D and E to part 75 of this chapter) under § 96.170(a)(1). The owner or operator of a unit that qualifies to use the low mass emissions excepted monitoring methodology under § 75.19 of this chapter or that qualifies to use an alternative monitoring system under subpart E of part 75 of this chapter shall comply with the procedures in paragraph (e) or (f) of this section respectively.

(1) *Requirements for initial certification*. The owner or operator shall ensure that each continuous monitoring system under § 96.170(a)(1)(including the automated data acquisition and handling system) successfully completes all of the initial certification testing required under § 75.20 of this chapter by the applicable deadline in § 96.170(b). In addition, whenever the owner or operator installs a monitoring system to

meet the requirements of this subpart in a location where no such monitoring system was previously installed, initial certification in accordance with §75.20 of this chapter is required.

(2) *Requirements for recertification.* Whenever the owner or operator makes a replacement, modification, or change in any certified continuous emission monitoring system under §96.170(a)(1) that may significantly affect the ability of the system to accurately measure or record NO_X mass emissions or heat input rate or to meet the quality-assurance and quality-control requirements of §75.21 of this chapter or appendix B to part 75 of this chapter, the owner or operator shall recertify the monitoring system in accordance with §75.20(b) of this chapter. Furthermore, whenever the owner or operator makes a replacement, modification, or change to the flue gas handling system or the unit's operation that may significantly change the stack flow or concentration profile, the owner or operator shall recertify each continuous emission monitoring system whose accuracy is potentially affected by the change, in accordance with §75.20(b) of this chapter. Examples of changes to a continuous emission monitoring system that require recertification include replacement of the analyzer, complete replacement of an existing continuous emission monitoring system, or change in location or orientation of the sampling probe or site. Any fuel flowmeter system, and any excepted NO_X monitoring system under appendix E to part 75 of this chapter, under §96.170(a)(1) are subject to the recertification requirements in §75.20(g)(6) of this chapter.

(3) *Approval process for initial certification and recertification.* Paragraphs (d)(3)(i) through (iv) of this section apply to both initial certification and recertification of a continuous monitoring system under §96.170(a)(1). For recertifications, replace the words ''certification'' and ''initial certification'' with the word ''recertification'', replace the word ''certified'' with the word ''recertified,'' and follow the procedures in §§75.20(b)(5) and (g)(7) of this chapter in lieu of the procedures in paragraph (d)(3)(v) of this section.

(i) *Notification of certification.* The CAIR designated representative shall submit to the permitting authority, the appropriate EPA Regional Office, and the Administrator written notice of the dates of certification testing, in accordance with §96.173.

(ii) *Certification application.* The CAIR designated representative shall submit to the permitting authority a certification application for each monitoring system. A complete certification application shall include the information specified in §75.63 of this chapter.

(iii) *Provisional certification date.* The provisional certification date for a monitoring system shall be determined in accordance with §75.20(a)(3) of this chapter. A provisionally certified monitoring system may be used under the CAIR NO_X Annual Trading Program for a period not to exceed 120 days after receipt by the permitting authority of the complete certification application for the monitoring system under paragraph (d)(3)(ii) of this section. Data measured and recorded by the provisionally certified monitoring system, in accordance with the requirements of part 75 of this chapter, will be considered valid quality-assured data (retroactive to the date and time of provisional certification), provided that the permitting authority does not invalidate the provisional certification by issuing a notice of disapproval within 120 days of the date of receipt of the complete certification application by the permitting authority.

(iv) *Certification application approval process.* The permitting authority will issue a written notice of approval or disapproval of the certification application to the owner or operator within 120 days of receipt of the complete certification application under paragraph (d)(3)(ii) of this section. In the event the permitting authority does not issue such a notice within such 120-day period, each monitoring system that meets the applicable performance requirements of part 75 of this chapter and is included in the certification application will be deemed certified for use under the CAIR NO_X Annual Trading Program.

(A) *Approval notice.* If the certification application is complete and shows that each monitoring system

meets the applicable performance requirements of part 75 of this chapter, then the permitting authority will issue a written notice of approval of the certification application within 120 days of receipt.

(B) *Incomplete application notice.* If the certification application is not complete, then the permitting authority will issue a written notice of incompleteness that sets a reasonable date by which the CAIR designated representative must submit the additional information required to complete the certification application. If the CAIR designated representative does not comply with the notice of incompleteness by the specified date, then the permitting authority may issue a notice of disapproval under paragraph (d)(3)(iv)(C) of this section. The 120-day review period shall not begin before receipt of a complete certification application.

(C) *Disapproval notice.* If the certification application shows that any monitoring system does not meet the performance requirements of part 75 of this chapter or if the certification application is incomplete and the requirement for disapproval under paragraph (d)(3)(iv)(B) of this section is met, then the permitting authority will issue a written notice of disapproval of the certification application. Upon issuance of such notice of disapproval, the provisional certification is invalidated by the permitting authority and the data measured and recorded by each uncertified monitoring system shall not be considered valid quality-assured data beginning with the date and hour of provisional certification (as defined under § 75.20(a)(3) of this chapter). The owner or operator shall follow the procedures for loss of certification in paragraph (d)(3)(v) of this section for each monitoring system that is disapproved for initial certification.

(D) *Audit decertification.* The permitting authority or, for a CAIR NO_X opt-in unit or a unit for which a CAIR opt-in permit application is submitted and not withdrawn and a CAIR opt-in permit is not yet issued or denied under subpart II of this part, the Administrator may issue a notice of disapproval of the certification status of a monitor in accordance with § 96.172(b).

(v) *Procedures for loss of certification.* If the permitting authority or the Administrator issues a notice of disapproval of a certification application under paragraph (d)(3)(iv)(C) of this section or a notice of disapproval of certification status under paragraph (d)(3)(iv)(D) of this section, then:

(A) The owner or operator shall substitute the following values, for each disapproved monitoring system, for each hour of unit operation during the period of invalid data specified under § 75.20(a)(4)(iii), § 75.20(g)(7), or § 75.21(e) of this chapter and continuing until the applicable date and hour specified under § 75.20(a)(5)(i) or (g)(7) of this chapter:

(*1*) For a disapproved NO_X emission rate (*i.e.*, NO_X-diluent) system, the maximum potential NO_X emission rate, as defined in § 72.2 of this chapter.

(*2*) For a disapproved NO_X pollutant concentration monitor and disapproved flow monitor, respectively, the maximum potential concentration of NO_X and the maximum potential flow rate, as defined in sections 2.1.2.1 and 2.1.4.1 of appendix A to part 75 of this chapter.

(*3*) For a disapproved moisture monitoring system and disapproved diluent gas monitoring system, respectively, the minimum potential moisture percentage and either the maximum potential CO_2 concentration or the minimum potential O_2 concentration (as applicable), as defined in sections 2.1.5, 2.1.3.1, and 2.1.3.2 of appendix A to part 75 of this chapter.

(*4*) For a disapproved fuel flowmeter system, the maximum potential fuel flow rate, as defined in section 2.4.2.1 of appendix D to part 75 of this chapter.

(*5*) For a disapproved excepted NO_X monitoring system under appendix E to part 75 of this chapter, the fuel-specific maximum potential NO_X emission rate, as defined in § 72.2 of this chapter.

(B) The CAIR designated representative shall submit a notification of certification retest dates and a new certification application in accordance with paragraphs (d)(3)(i) and (ii) of this section.

(C) The owner or operator shall repeat all certification tests or other requirements that were failed by the

monitoring system, as indicated in the permitting authority's or the Administrator's notice of disapproval, no later than 30 unit operating days after the date of issuance of the notice of disapproval.

(e) *Initial certification and recertification procedures for units using the low mass emission excepted methodology under § 75.19 of this chapter*. The owner or operator of a unit qualified to use the low mass emissions (LME) excepted methodology under § 75.19 of this chapter shall meet the applicable certification and recertification requirements in §§ 75.19(a)(2) and 75.20(h) of this chapter. If the owner or operator of such a unit elects to certify a fuel flowmeter system for heat input determination, the owner or operator shall also meet the certification and recertification requirements in § 75.20(g) of this chapter.

(f) *Certification/recertification procedures for alternative monitoring systems*. The CAIR designated representative of each unit for which the owner or operator intends to use an alternative monitoring system approved by the Administrator and, if applicable, the permitting authority under subpart E of part 75 of this chapter shall comply with the applicable notification and application procedures of § 75.20(f) of this chapter.

[70 FR 25339, May 12, 2005, as amended at 71 FR 25385, Apr. 28, 2006]

§ 96.172 Out of control periods.

(a) Whenever any monitoring system fails to meet the quality-assurance and quality-control requirements or data validation requirements of part 75 of this chapter, data shall be substituted using the applicable missing data procedures in subpart D or subpart H of, or appendix D or appendix E to, part 75 of this chapter.

(b) *Audit decertification*. Whenever both an audit of a monitoring system and a review of the initial certification or recertification application reveal that any monitoring system should not have been certified or recertified because it did not meet a particular performance specification or other requirement under § 96.171 or the applicable provisions of part 75 of this chapter, both at the time of the initial certification or recertification application submission and at the time of the audit, the permitting authority or, for a CAIR NO_X opt-in unit or a unit for which a CAIR opt-in permit application is submitted and not withdrawn and a CAIR opt-in permit is not yet issued or denied under subpart II of this part, the Administrator will issue a notice of disapproval of the certification status of such monitoring system. For the purposes of this paragraph, an audit shall be either a field audit or an audit of any information submitted to the permitting authority or the Administrator. By issuing the notice of disapproval, the permitting authority or the Administrator revokes prospectively the certification status of the monitoring system. The data measured and recorded by the monitoring system shall not be considered valid quality-assured data from the date of issuance of the notification of the revoked certification status until the date and time that the owner or operator completes subsequently approved initial certification or recertification tests for the monitoring system. The owner or operator shall follow the applicable initial certification or recertification procedures in § 96.171 for each disapproved monitoring system.

§ 96.173 Notifications.

The CAIR designated representative for a CAIR NO_X unit shall submit written notice to the permitting authority and the Administrator in accordance with § 75.61 of this chapter.

[70 FR 25339, May 12, 2005, as amended at 71 FR 25385, Apr. 28, 2006]

§ 96.174 Recordkeeping and reporting.

(a) *General provisions*. The CAIR designated representative shall comply with all recordkeeping and reporting requirements in this section, the applicable recordkeeping and reporting requirements under § 75.73 of this chapter, and the requirements of § 96.110(e)(1).

(b) *Monitoring Plans*. The owner or operator of a CAIR NO_X unit shall comply with requirements of § 75.73(c) and (e) of this chapter and, for a unit for which a CAIR opt-in permit application is submitted and not withdrawn and a CAIR

opt-in permit is not yet issued or denied under subpart II of this part, §§ 96.183 and 96.184(a).

(c) *Certification Applications.* The CAIR designated representative shall submit an application to the permitting authority within 45 days after completing all initial certification or recertification tests required under § 96.171, including the information required under § 75.63 of this chapter.

(d) *Quarterly reports.* The CAIR designated representative shall submit quarterly reports, as follows:

(1) The CAIR designated representative shall report the NO_X mass emissions data and heat input data for the CAIR NO_X unit, in an electronic quarterly report in a format prescribed by the Administrator, for each calendar quarter beginning with:

(i) For a unit that commences commercial operation before July 1, 2007, the calendar quarter covering January 1, 2008 through March 31, 2008;

(ii) For a unit that commences commercial operation on or after July 1, 2007, the calendar quarter corresponding to the earlier of the date of provisional certification or the applicable deadline for initial certification under § 96.170(b), unless that quarter is the third or fourth quarter of 2007, in which case reporting shall commence in the quarter covering January 1, 2008 through March 31, 2008;

(iii) Notwithstanding paragraphs (d)(1)(i) and (ii) of this section, for a unit for which a CAIR opt-in permit application is submitted and not withdrawn and a CAIR opt-in permit is not yet issued or denied under subpart II of this part, the calendar quarter corresponding to the date specified in § 96.184(b); and

(iv) Notwithstanding paragraphs (d)(1)(i) and (ii) of this section, for a CAIR NO_X opt-in unit under subpart II of this part, the calendar quarter corresponding to the date on which the CAIR NO_X opt-in unit enters the CAIR NO_X Annual Trading Program as provided in § 96.184(g).

(2) The CAIR designated representative shall submit each quarterly report to the Administrator within 30 days following the end of the calendar quarter covered by the report. Quarterly reports shall be submitted in the manner specified in § 75.73(f) of this chapter.

(3) For CAIR NO_X units that are also subject to an Acid Rain emissions limitation or the CAIR NO_X Ozone Season Trading Program, CAIR SO_2 Trading Program, or Hg Budget Trading Program, quarterly reports shall include the applicable data and information required by subparts F through I of part 75 of this chapter as applicable, in addition to the NO_X mass emission data, heat input data, and other information required by this subpart.

(e) *Compliance certification.* The CAIR designated representative shall submit to the Administrator a compliance certification (in a format prescribed by the Administrator) in support of each quarterly report based on reasonable inquiry of those persons with primary responsibility for ensuring that all of the unit's emissions are correctly and fully monitored. The certification shall state that:

(1) The monitoring data submitted were recorded in accordance with the applicable requirements of this subpart and part 75 of this chapter, including the quality assurance procedures and specifications; and

(2) For a unit with add-on NO_X emission controls and for all hours where NO_X data are substituted in accordance with § 75.34(a)(1) of this chapter, the add-on emission controls were operating within the range of parameters listed in the quality assurance/quality control program under appendix B to part 75 of this chapter and the substitute data values do not systematically underestimate NO_X emissions.

[70 FR 25339, May 12, 2005, as amended at 71 FR 25385, Apr. 28, 2006]

§ 96.175 Petitions.

(a) Except as provided in paragraph (b)(2) of this section, the CAIR designated representative of a CAIR NO_X unit that is subject to an Acid Rain emissions limitation may submit a petition under § 75.66 of this chapter to the Administrator requesting approval to apply an alternative to any requirement of this subpart. Application of an alternative to any requirement of this

subpart is in accordance with this subpart only to the extent that the petition is approved in writing by the Administrator, in consultation with the permitting authority.

(b)(1) The CAIR designated representative of a CAIR NO_X unit that is not subject to an Acid Rain emissions limitation may submit a petition under § 75.66 of this chapter to the permitting authority and the Administrator requesting approval to apply an alternative to any requirement of this subpart. Application of an alternative to any requirement of this subpart is in accordance with this subpart only to the extent that the petition is approved in writing by both the permitting authority and the Administrator.

(2) The CAIR designated representative of a CAIR NO_X unit that is subject to an Acid Rain emissions limitation may submit a petition under § 75.66 of this chapter to the permitting authority and the Administrator requesting approval to apply an alternative to a requirement concerning any additional continuous emission monitoring system required under § 75.72 of this chapter. Application of an alternative to any such requirement is in accordance with this subpart only to the extent that the petition is approved in writing by both the permitting authority and the Administrator.

Subpart II—CAIR NO_X Opt-in Units

SOURCE: 70 FR 25339, May 12, 2005, unless otherwise noted.

§ 96.180 Applicability.

A CAIR NO_X opt-in unit must be a unit that:

(a) Is located in the State;

(b) Is not a CAIR NO_X unit under § 96.104 and is not covered by a retired unit exemption under § 96.105 that is in effect;

(c) Is not covered by a retired unit exemption under § 72.8 of this chapter that is in effect;

(d) Has or is required or qualified to have a title V operating permit or other federally enforceable permit; and

(e) Vents all of its emissions to a stack and can meet the monitoring, recordkeeping, and reporting requirements of subpart HH of this part.

§ 96.181 General.

(a) Except as otherwise provided in §§ 96.101 through 96.104, §§ 96.106 through 96.108, and subparts BB and CC and subparts FF through HH of this part, a CAIR NO_X opt-in unit shall be treated as a CAIR NO_X unit for purposes of applying such sections and subparts of this part.

(b) Solely for purposes of applying, as provided in this subpart, the requirements of subpart HH of this part to a unit for which a CAIR opt-in permit application is submitted and not withdrawn and a CAIR opt-in permit is not yet issued or denied under this subpart, such unit shall be treated as a CAIR NO_X unit before issuance of a CAIR opt-in permit for such unit.

§ 96.182 CAIR designated representative.

Any CAIR NO_X opt-in unit, and any unit for which a CAIR opt-in permit application is submitted and not withdrawn and a CAIR opt-in permit is not yet issued or denied under this subpart, located at the same source as one or more CAIR NO_X units shall have the same CAIR designated representative and alternate CAIR designated representative as such CAIR NO_X units.

§ 96.183 Applying for CAIR opt-in permit.

(a) *Applying for initial CAIR opt-in permit.* The CAIR designated representative of a unit meeting the requirements for a CAIR NO_X opt-in unit in § 96.180 may apply for an initial CAIR opt-in permit at any time, except as provided under § 96.186(f) and (g), and, in order to apply, must submit the following:

(1) A complete CAIR permit application under § 96.122;

(2) A certification, in a format specified by the permitting authority, that the unit:

(i) Is not a CAIR NO_X unit under § 96.104 and is not covered by a retired unit exemption under § 96.105 that is in effect;

(ii) Is not covered by a retired unit exemption under § 72.8 of this chapter that is in effect;

(iii) Vents all of its emissions to a stack, and

(iv) Has documented heat input for more than 876 hours during the 6

months immediately preceding submission of the CAIR permit application under § 96.122;

(3) A monitoring plan in accordance with subpart HH of this part;

(4) A complete certificate of representation under § 96.113 consistent with § 96.182, if no CAIR designated representative has been previously designated for the source that includes the unit; and

(5) A statement, in a format specified by the permitting authority, whether the CAIR designated representative requests that the unit be allocated CAIR NO_X allowances under § 96.188(b) or § 96.188(c) (subject to the conditions in §§ 96.184(h) and 96.186(g)). If allocation under § 96.188(c) is requested, this statement shall include a statement that the owners and operators of the unit intend to repower the unit before January 1, 2015 and that they will provide, upon request, documentation demonstrating such intent.

(b) *Duty to reapply*. (1) The CAIR designated representative of a CAIR NO_X opt-in unit shall submit a complete CAIR permit application under § 96.122 to renew the CAIR opt-in unit permit in accordance with the permitting authority's regulations for title V operating permits, or the permitting authority's regulations for other federally enforceable permits if applicable, addressing permit renewal.

(2) Unless the permitting authority issues a notification of acceptance of withdrawal of the CAIR NO_X opt-in unit from the CAIR NO_X Annual Trading Program in accordance with § 96.186 or the unit becomes a CAIR NO_X unit under § 96.104, the CAIR NO_X opt-in unit shall remain subject to the requirements for a CAIR NO_X opt-in unit, even if the CAIR designated representative for the CAIR NO_X opt-in unit fails to submit a CAIR permit application that is required for renewal of the CAIR opt-in permit under paragraph (b)(1) of this section.

[70 FR 25339, May 12, 2005, as amended at 71 FR 25385, Apr. 28, 2006]

§ 96.184 Opt-in process.

The permitting authority will issue or deny a CAIR opt-in permit for a unit for which an initial application for a CAIR opt-in permit under § 96.183 is submitted in accordance with the following:

(a) *Interim review of monitoring plan*. The permitting authority and the Administrator will determine, on an interim basis, the sufficiency of the monitoring plan accompanying the initial application for a CAIR opt-in permit under § 96.183. A monitoring plan is sufficient, for purposes of interim review, if the plan appears to contain information demonstrating that the NO_X emissions rate and heat input of the unit and all other applicable parameters are monitored and reported in accordance with subpart HH of this part. A determination of sufficiency shall not be construed as acceptance or approval of the monitoring plan.

(b) *Monitoring and reporting*. (1)(i) If the permitting authority and the Administrator determine that the monitoring plan is sufficient under paragraph (a) of this section, the owner or operator shall monitor and report the NO_X emissions rate and the heat input of the unit and all other applicable parameters, in accordance with subpart HH of this part, starting on the date of certification of the appropriate monitoring systems under subpart HH of this part and continuing until a CAIR opt-in permit is denied under § 96.184(f) or, if a CAIR opt-in permit is issued, the date and time when the unit is withdrawn from the CAIR NO_X Annual Trading Program in accordance with § 96.186.

(ii) The monitoring and reporting under paragraph (b)(1)(i) of this section shall include the entire control period immediately before the date on which the unit enters the CAIR NO_X Annual Trading Program under § 96.184(g), during which period monitoring system availability must not be less than 90 percent under subpart HH of this part and the unit must be in full compliance with any applicable State or Federal emissions or emissions-related requirements.

(2) To the extent the NO_X emissions rate and the heat input of the unit are monitored and reported in accordance with subpart HH of this part for one or more control periods, in addition to the control period under paragraph (b)(1)(ii) of this section, during which control periods monitoring system

availability is not less than 90 percent under subpart HH of this part and the unit is in full compliance with any applicable State or Federal emissions or emissions-related requirements and which control periods begin not more than 3 years before the unit enters the CAIR NO_X Annual Trading Program under § 96.184(g), such information shall be used as provided in paragraphs (c) and (d) of this section.

(c) *Baseline heat input.* The unit's baseline heat input shall equal:

(1) If the unit's NO_X emissions rate and heat input are monitored and reported for only one control period, in accordance with paragraph (b)(1) of this section, the unit's total heat input (in mmBtu) for the control period; or

(2) If the unit's NO_X emissions rate and heat input are monitored and reported for more than one control period, in accordance with paragraphs (b)(1) and (2) of this section, the average of the amounts of the unit's total heat input (in mmBtu) for the control periods under paragraphs (b)(1)(ii) and (2) of this section.

(d) *Baseline NO_X emission rate.* The unit's baseline NO_X emission rate shall equal:

(1) If the unit's NO_X emissions rate and heat input are monitored and reported for only one control period, in accordance with paragraph (b)(1) of this section, the unit's NO_X emissions rate (in lb/mmBtu) for the control period;

(2) If the unit's NO_X emissions rate and heat input are monitored and reported for more than one control period, in accordance with paragraphs (b)(1) and (2) of this section, and the unit does not have add-on NO_X emission controls during any such control periods, the average of the amounts of the unit's NO_X emissions rate (in lb/mmBtu) for the control periods under paragraphs (b)(1)(ii) and (2) of this section; or

(3) If the unit's NO_X emissions rate and heat input are monitored and reported for more than one control period, in accordance with paragraphs (b)(1) and (2) of this section, and the unit has add-on NO_X emission controls during any such control periods, the average of the amounts of the unit's NO_X emissions rate (in lb/mmBtu) for such control periods during which the unit has add-on NO_X emission controls.

(e) *Issuance of CAIR opt-in permit.* After calculating the baseline heat input and the baseline NO_X emissions rate for the unit under paragraphs (c) and (d) of this section and if the permitting authority determines that the CAIR designated representative shows that the unit meets the requirements for a CAIR NO_X opt-in unit in § 96.180 and meets the elements certified in § 96.183(a)(2), the permitting authority will issue a CAIR opt-in permit. The permitting authority will provide a copy of the CAIR opt-in permit to the Administrator, who will then establish a compliance account for the source that includes the CAIR NO_X opt-in unit unless the source already has a compliance account.

(f) *Issuance of denial of CAIR opt-in permit.* Notwithstanding paragraphs (a) through (e) of this section, if at any time before issuance of a CAIR opt-in permit for the unit, the permitting authority determines that the CAIR designated representative fails to show that the unit meets the requirements for a CAIR NO_X opt-in unit in § 96.180 or meets the elements certified in § 96.183(a)(2), the permitting authority will issue a denial of a CAIR opt-in permit for the unit.

(g) *Date of entry into CAIR NO_X Annual Trading Program.* A unit for which an initial CAIR opt-in permit is issued by the permitting authority shall become a CAIR NO_X opt-in unit, and a CAIR NO_X unit, as of the later of January 1, 2009 or January 1 of the first control period during which such CAIR opt-in permit is issued.

(h) *Repowered CAIR NO_X opt-in unit.* (1) If CAIR designated representative requests, and the permitting authority issues a CAIR opt-in permit providing for, allocation to a CAIR NO_X opt-in unit of CAIR NO_X allowances under § 96.188(c) and such unit is repowered after its date of entry into the CAIR NO_X Annual Trading Program under paragraph (g) of this section, the repowered unit shall be treated as a CAIR NO_X opt-in unit replacing the original CAIR NO_X opt-in unit, as of the date of start-up of the repowered unit's combustion chamber.

(2) Notwithstanding paragraphs (c) and (d) of this section, as of the date of start-up under paragraph (h)(1) of this section, the repowered unit shall be deemed to have the same date of commencement of operation, date of commencement of commercial operation, baseline heat input, and baseline NO_X emission rate as the original CAIR NO_X opt-in unit, and the original CAIR NO_X opt-in unit shall no longer be treated as a CAIR NO_X opt-in unit or a CAIR NO_X unit.

[70 FR 25339, May 12, 2005, as amended at 71 FR 25385, Apr. 28, 2006; 71 FR 74794, Dec. 13, 2006]

§ 96.185 CAIR opt-in permit contents.

(a) Each CAIR opt-in permit will contain:

(1) All elements required for a complete CAIR permit application under § 96.122;

(2) The certification in § 96.183(a)(2);

(3) The unit's baseline heat input under § 96.184(c);

(4) The unit's baseline NO_X emission rate under § 96.184(d);

(5) A statement whether the unit is to be allocated CAIR NO_X allowances § 96.188(b) or § 96.188(c) (subject to the conditions in §§ 96.184(h) and 96.186(g));

(6) A statement that the unit may withdraw from the CAIR NO_X Annual Trading Program only in accordance with § 96.186; and

(7) A statement that the unit is subject to, and the owners and operators of the unit must comply with, the requirements of § 96.187.

(b) Each CAIR opt-in permit is deemed to incorporate automatically the definitions of terms under § 96.102 and, upon recordation by the Administrator under subpart FF or GG of this part or this subpart, every allocation, transfer, or deduction of CAIR NO_X allowances to or from the compliance account of the source that includes a CAIR NO_X opt-in unit covered by the CAIR opt-in permit.

(c) The CAIR opt-in permit shall be included, in a format specified by the permitting authority, in the CAIR permit for the source where the CAIR NO_X opt-in unit is located and in a title V operating permit or other federally enforceable permit for the source.

[70 FR 25339, May 12, 2005, as amended at 71 FR 25385, Apr. 28, 2006]

§ 96.186 Withdrawal from CAIR NO_X Annual Trading Program.

Except as provided under paragraph (g) of this section, a CAIR NO_X opt-in unit may withdraw from the CAIR NO_X Annual Trading Program, but only if the permitting authority issues a notification to the CAIR designated representative of the CAIR NO_X opt-in unit of the acceptance of the withdrawal of the CAIR NO_X opt-in unit in accordance with paragraph (d) of this section.

(a) *Requesting withdrawal.* In order to withdraw a CAIR CAIR NO_X opt-in unit from the CAIR NO_X Annual Trading Program, the CAIR designated representative of the CAIR NO_X opt-in unit shall submit to the permitting authority a request to withdraw effective as of midnight of December 31 of a specified calendar year, which date must be at least 4 years after December 31 of the year of entry into the CAIR NO_X Annual Trading Program under § 96.184(g). The request must be submitted no later than 90 days before the requested effective date of withdrawal.

(b) *Conditions for withdrawal.* Before a CAIR NO_X opt-in unit covered by a request under paragraph (a) of this section may withdraw from the CAIR NO_X Annual Trading Program and the CAIR opt-in permit may be terminated under paragraph (e) of this section, the following conditions must be met:

(1) For the control period ending on the date on which the withdrawal is to be effective, the source that includes the CAIR NO_X opt-in unit must meet the requirement to hold CAIR NO_X allowances under § 96.106(c) and cannot have any excess emissions.

(2) After the requirement for withdrawal under paragraph (b)(1) of this section is met, the Administrator will deduct from the compliance account of the source that includes the CAIR NO_X opt-in unit CAIR NO_X allowances equal in amount to and allocated for the same or a prior control period as any CAIR NO_X allowances allocated to the CAIR NO_X opt-in unit under § 96.188 for

any control period for which the withdrawal is to be effective. If there are no remaining CAIR NO_X units at the source, the Administrator will close the compliance account, and the owners and operators of the CAIR NO_X opt-in unit may submit a CAIR NO_X allowance transfer for any remaining CAIR NO_X allowances to another CAIR NO_X Allowance Tracking System in accordance with subpart GG of this part.

(c) *Notification*. (1) After the requirements for withdrawal under paragraphs (a) and (b) of this section are met (including deduction of the full amount of CAIR NO_X allowances required), the permitting authority will issue a notification to the CAIR designated representative of the CAIR NO_X opt-in unit of the acceptance of the withdrawal of the CAIR NO_X opt-in unit as of midnight on December 31 of the calendar year for which the withdrawal was requested.

(2) If the requirements for withdrawal under paragraphs (a) and (b) of this section are not met, the permitting authority will issue a notification to the CAIR designated representative of the CAIR NO_X opt-in unit that the CAIR NO_X opt-in unit's request to withdraw is denied. Such CAIR NO_X opt-in unit shall continue to be a CAIR NO_X opt-in unit.

(d) *Permit amendment*. After the permitting authority issues a notification under paragraph (c)(1) of this section that the requirements for withdrawal have been met, the permitting authority will revise the CAIR permit covering the CAIR NO_X opt-in unit to terminate the CAIR opt-in permit for such unit as of the effective date specified under paragraph (c)(1) of this section. The unit shall continue to be a CAIR NO_X opt-in unit until the effective date of the termination and shall comply with all requirements under the CAIR NO_X Annual Trading Program concerning any control periods for which the unit is a CAIR NO_X opt-in unit, even if such requirements arise or must be complied with after the withdrawal takes effect.

(e) *Reapplication upon failure to meet conditions of withdrawal*. If the permitting authority denies the CAIR NO_X opt-in unit's request to withdraw, the CAIR designated representative may submit another request to withdraw in accordance with paragraphs (a) and (b) of this section.

(f) *Ability to reapply to the CAIR NO_X Annual Trading Program*. Once a CAIR NO_X opt-in unit withdraws from the CAIR NO_X Annual Trading Program and its CAIR opt-in permit is terminated under this section, the CAIR designated representative may not submit another application for a CAIR opt-in permit under § 96.183 for such CAIR NO_X opt-in unit before the date that is 4 years after the date on which the withdrawal became effective. Such new application for a CAIR opt-in permit will be treated as an initial application for a CAIR opt-in permit under § 96.184.

(g) *Inability to withdraw*. Notwithstanding paragraphs (a) through (f) of this section, a CAIR NO_X opt-in unit shall not be eligible to withdraw from the CAIR NO_X Annual Trading Program if the CAIR designated representative of the CAIR NO_X opt-in unit requests, and the permitting authority issues a CAIR NO_X opt-in permit providing for, allocation to the CAIR NO_X opt-in unit of CAIR NO_X allowances under § 96.188(c).

[70 FR 25339, May 12, 2005, as amended at 71 FR 25385, Apr. 28, 2006]

§ 96.187 Change in regulatory status.

(a) *Notification*. If a CAIR NO_X opt-in unit becomes a CAIR NO_X unit under § 96.104, then the CAIR designated representative shall notify in writing the permitting authority and the Administrator of such change in the CAIR NO_X opt-in unit's regulatory status, within 30 days of such change.

(b) *Permitting authority's and Administrator's actions*. (1) If a CAIR NO_X opt-in unit becomes a CAIR NO_X unit under § 96.104, the permitting authority will revise the CAIR NO_X opt-in unit's CAIR opt-in permit to meet the requirements of a CAIR permit under § 96.123, and remove the CAIR opt-in permit provisions, as of the date on which the CAIR NO_X opt-in unit becomes a CAIR NO_X unit under § 96.104.

(2)(i) The Administrator will deduct from the compliance account of the source that includes the CAIR NO_X opt-in unit that becomes a CAIR NO_X unit under § 96.104, CAIR NO_X allowances

equal in amount to and allocated for the same or a prior control period as:

(A) Any CAIR NO_X allowances allocated to the CAIR NO_X opt-in unit under § 96.188 for any control period after the date on which the CAIR NO_X opt-in unit becomes a CAIR NO_X unit under § 96.104; and

(B) If the date on which the CAIR NO_X opt-in unit becomes a CAIR NO_X unit under § 96.104 is not December 31, the CAIR NO_X allowances allocated to the CAIR NO_X opt-in unit under § 96.188 for the control period that includes the date on which the CAIR NO_X opt-in unit becomes a CAIR NO_X unit under § 96.104, multiplied by the ratio of the number of days, in the control period, starting with the date on which the CAIR NO_X opt-in unit becomes a CAIR NO_X unit under § 96.104 divided by the total number of days in the control period and rounded to the nearest whole allowance as appropriate.

(ii) The CAIR designated representative shall ensure that the compliance account of the source that includes the CAIR NO_X opt-in unit that becomes a CAIR NO_X unit under § 96.104 contains the CAIR NO_X allowances necessary for completion of the deduction under paragraph (b)(2)(i) of this section.

(3)(i) For every control period after the date on which the CAIR NO_X opt-in unit becomes a CAIR NO_X unit under § 96.104, the CAIR NO_X opt-in unit will be allocated CAIR NO_X allowances under § 96.142.

(ii) If the date on which the CAIR NO_X opt-in unit becomes a CAIR NO_X unit under § 96.104 is not December 31, the following amount of CAIR NO_X allowances will be allocated to the CAIR NO_X opt-in unit (as a CAIR NO_X unit) under § 96.142 for the control period that includes the date on which the CAIR NO_X opt-in unit becomes a CAIR NO_X unit under § 96.104:

(A) The amount of CAIR NO_X allowances otherwise allocated to the CAIR NO_X opt-in unit (as a CAIR NO_X unit) under § 96.142 for the control period multiplied by;

(B) The ratio of the number of days, in the control period, starting with the date on which the CAIR NO_X opt-in unit becomes a CAIR NO_X unit under § 96.104, divided by the total number of days in the control period; and

(C) Rounded to the nearest whole allowance as appropriate.

[70 FR 25339, May 12, 2005, as amended at 71 FR 25385, Apr. 28, 2006; 71 FR 74794, Dec. 13, 2006]

§ 96.188 CAIR NO_X allowance allocations to CAIR NO_X opt-in units.

(a) *Timing requirements.* (1) When the CAIR opt-in permit is issued under § 96.184(e), the permitting authority will allocate CAIR NO_X allowances to the CAIR NO_X opt-in unit, and submit to the Administrator the allocation for the control period in which a CAIR NO_X opt-in unit enters the CAIR NO_X Annual Trading Program under § 96.184(g), in accordance with paragraph (b) or (c) of this section.

(2) By no later than October 31 of the control period after the control period in which a CAIR NO_X opt-in unit enters the CAIR NO_X Annual Trading Program under § 96.184(g) and October 31 of each year thereafter, the permitting authority will allocate CAIR NO_X allowances to the CAIR NO_X opt-in unit, and submit to the Administrator the allocation for the control period that includes such submission deadline and in which the unit is a CAIR NO_X opt-in unit, in accordance with paragraph (b) or (c) of this section.

(b) *Calculation of allocation.* For each control period for which a CAIR NO_X opt-in unit is to be allocated CAIR NO_X allowances, the permitting authority will allocate in accordance with the following procedures:

(1) The heat input (in mmBtu) used for calculating the CAIR NO_X allowance allocation will be the lesser of:

(i) The CAIR NO_X opt-in unit's baseline heat input determined under § 96.184(c); or

(ii) The CAIR NO_X opt-in unit's heat input, as determined in accordance with subpart HH of this part, for the immediately prior control period, except when the allocation is being calculated for the control period in which the CAIR NO_X opt-in unit enters the CAIR NO_X Annual Trading Program under § 96.184(g).

(2) The NO_X emission rate (in lb/mmBtu) used for calculating CAIR NO_X allowance allocations will be the lesser of:

(i) The CAIR NO_X opt-in unit's baseline NO_X emissions rate (in lb/mmBtu) determined under § 96.184(d) and multiplied by 70 percent; or

(ii) The most stringent State or Federal NO_X emissions limitation applicable to the CAIR NO_X opt-in unit at any time during the control period for which CAIR NO_X allowances are to be allocated.

(3) The permitting authority will allocate CAIR NO_X allowances to the CAIR NO_X opt-in unit in an amount equaling the heat input under paragraph (b)(1) of this section, multiplied by the NO_X emission rate under paragraph (b)(2) of this section, divided by 2,000 lb/ton, and rounded to the nearest whole allowance as appropriate.

(c) Notwithstanding paragraph (b) of this section and if the CAIR designated representative requests, and the permitting authority issues a CAIR opt-in permit (based on a demonstration of the intent to repower stated under § 96.183(a)(5)) providing for, allocation to a CAIR NO_X opt-in unit of CAIR NO_X allowances under this paragraph (subject to the conditions in §§ 96.184(h) and 96.186(g)), the permitting authority will allocate to the CAIR NO_X opt-in unit as follows:

(1) For each control period in 2009 through 2014 for which the CAIR NO_X opt-in unit is to be allocated CAIR NO_X allowances,

(i) The heat input (in mmBtu) used for calculating CAIR NO_X allowance allocations will be determined as described in paragraph (b)(1) of this section.

(ii) The NO_X emission rate (in lb/mmBtu) used for calculating CAIR NO_X allowance allocations will be the lesser of:

(A) The CAIR NO_X opt-in unit's baseline NO_X emissions rate (in lb/mmBtu) determined under § 96.184(d); or

(B) The most stringent State or Federal NO_X emissions limitation applicable to the CAIR NO_X opt-in unit at any time during the control period in which the CAIR NO_X opt-in unit enters the CAIR NO_X Annual Trading Program under § 96.184(g).

(iii) The permitting authority will allocate CAIR NO_X allowances to the CAIR NO_X opt-in unit in an amount equaling the heat input under paragraph (c)(1)(i) of this section, multiplied by the NO_X emission rate under paragraph (c)(1)(ii) of this section, divided by 2,000 lb/ton, and rounded to the nearest whole allowance as appropriate.

(2) For each control period in 2015 and thereafter for which the CAIR NO_X opt-in unit is to be allocated CAIR NO_X allowances,

(i) The heat input (in mmBtu) used for calculating the CAIR NO_X allowance allocations will be determined as described in paragraph (b)(1) of this section.

(ii) The NO_X emission rate (in lb/mmBtu) used for calculating the CAIR NO_X allowance allocation will be the lesser of:

(A) 0.15 lb/mmBtu;

(B) The CAIR NO_X opt-in unit's baseline NO_X emissions rate (in lb/mmBtu) determined under § 96.184(d); or

(C) The most stringent State or Federal NO_X emissions limitation applicable to the CAIR NO_X opt-in unit at any time during the control period for which CAIR NO_X allowances are to be allocated.

(iii) The permitting authority will allocate CAIR NO_X allowances to the CAIR NO_X opt-in unit in an amount equaling the heat input under paragraph (c)(2)(i) of this section, multiplied by the NO_X emission rate under paragraph (c)(2)(ii) of this section, divided by 2,000 lb/ton, and rounded to the nearest whole allowance as appropriate.

(d) *Recordation*. (1) The Administrator will record, in the compliance account of the source that includes the CAIR NO_X opt-in unit, the CAIR NO_X allowances allocated by the permitting authority to the CAIR NO_X opt-in unit under paragraph (a)(1) of this section.

(2) By December 1 of the control period in which a CAIR NO_X opt-in unit enters the CAIR NO_X Annual Trading Program under § 96.184(g) and December 1 of each year thereafter, the Administrator will record, in the compliance account of the source that includes the CAIR NO_X opt-in unit, the CAIR NO_X allowances allocated by the permitting authority to the CAIR NO_X opt-in unit under paragraph (a)(2) of this section.

[70 FR 25339, May 12, 2005, as amended at 71 FR 25385, Apr. 28, 2006]

Subparts JJ–ZZ [Reserved]

Subpart AAA—CAIR SO_2 Trading Program General Provisions

SOURCE: 70 FR 25362, May 12, 2005, unless otherwise noted.

§ 96.201 Purpose.

This subpart and subparts BBB through III establish the model rule comprising general provisions and the designated representative, permitting, allowance, monitoring, and opt-in provisions for the State Clean Air Interstate Rule (CAIR) SO_2 Trading Program, under section 110 of the Clean Air Act and § 51.124 of this chapter, as a means of mitigating interstate transport of fine particulates and sulfur dioxide. The owner or operator of a unit or a source shall comply with the requirements of this subpart and subparts BBB through III as a matter of federal law only if the State with jurisdiction over the unit and the source incorporates by reference such subparts or otherwise adopts the requirements of such subparts in accordance with § 51.124(o)(1) or (2) of this chapter, the State submits to the Administrator one or more revisions of the State implementation plan that include such adoption, and the Administrator approves such revisions. If the State adopts the requirements of such subparts in accordance with § 51.124(o)(1) or (2) of this chapter, then the State authorizes the Administrator to assist the State in implementing the CAIR SO_2 Trading Program by carrying out the functions set forth for the Administrator in such subparts.

§ 96.202 Definitions.

The terms used in this subpart and subparts BBB through III shall have the meanings set forth in this section as follows:

Account number means the identification number given by the Administrator to each CAIR SO_2 Allowance Tracking System account.

Acid Rain emissions limitation means a limitation on emissions of sulfur dioxide or nitrogen oxides under the Acid Rain Program.

Acid Rain Program means a multistate sulfur dioxide and nitrogen oxides air pollution control and emission reduction program established by the Administrator under title IV of the CAA and parts 72 through 78 of this chapter.

Administrator means the Administrator of the United States Environmental Protection Agency or the Administrator's duly authorized representative.

Allocate or *allocation* means, with regard to CAIR SO_2 allowances issued under the Acid Rain Program, the determination by the Administrator of the amount of such CAIR SO_2 allowances to be initially credited to a CAIR SO_2 unit or other entity and, with regard to CAIR SO_2 allowances issued under provisions of a State implementation plan that are approved under § 51.124(o)(1) or (2) or (r) of this chapter or § 97.288 of this chapter, the determination by a permitting authority of the amount of such CAIR SO_2 allowances to be initially credited to a CAIR SO_2 unit or other entity.

Allowance transfer deadline means, for a control period, midnight of March 1 (if it is a business day), or midnight of the first business day thereafter (if March 1 is not a business day), immediately following the control period and is the deadline by which a CAIR SO_2 allowance transfer must be submitted for recordation in a CAIR SO_2 source's compliance account in order to be used to meet the source's CAIR SO_2 emissions limitation for such control period in accordance with § 96.254.

Alternate CAIR designated representative means, for a CAIR SO_2 source and each CAIR SO_2 unit at the source, the natural person who is authorized by the owners and operators of the source and all such units at the source, in accordance with subparts BBB and III of this part, to act on behalf of the CAIR designated representative in matters pertaining to the CAIR SO_2 Trading Program. If the CAIR SO_2 source is also a CAIR NO_X source, then this natural person shall be the same person as the alternate CAIR designated representative under the CAIR NO_X Annual Trading Program. If the CAIR SO_2 source is also a CAIR NO_X Ozone Season source, then this natural person

shall be the same person as the alternate CAIR designated representative under the CAIR NO_X Ozone Season Trading Program. If the CAIR SO_2 source is also subject to the Acid Rain Program, then this natural person shall be the same person as the alternate designated representative under the Acid Rain Program. If the CAIR SO_2 source is also subject to the Hg Budget Trading Program, then this natural person shall be the same person as the alternate Hg designated representative under the Hg Budget Trading Program.

Automated data acquisition and handling system or *DAHS* means that component of the continuous emission monitoring system, or other emissions monitoring system approved for use under subpart HHH of this part, designed to interpret and convert individual output signals from pollutant concentration monitors, flow monitors, diluent gas monitors, and other component parts of the monitoring system to produce a continuous record of the measured parameters in the measurement units required by subpart HHH of this part.

Biomass means—

(1) Any organic material grown for the purpose of being converted to energy;

(2) Any organic byproduct of agriculture that can be converted into energy; or

(3) Any material that can be converted into energy and is nonmerchantable for other purposes, that is segregated from other nonmerchantable material, and that is;

(i) A forest-related organic resource, including mill residues, precommercial thinnings, slash, brush, or byproduct from conversion of trees to merchantable material; or

(ii) A wood material, including pallets, crates, dunnage, manufacturing and construction materials (other than pressure-treated, chemically-treated, or painted wood products), and landscape or right-of-way tree trimmings.

Boiler means an enclosed fossil- or other-fuel-fired combustion device used to produce heat and to transfer heat to recirculating water, steam, or other medium.

Bottoming-cycle cogeneration unit means a cogeneration unit in which the energy input to the unit is first used to produce useful thermal energy and at least some of the reject heat from the useful thermal energy application or process is then used for electricity production.

CAIR authorized account representative means, with regard to a general account, a responsible natural person who is authorized, in accordance with subparts BBB, FFF, and III of this part, to transfer and otherwise dispose of CAIR SO_2 allowances held in the general account and, with regard to a compliance account, the CAIR designated representative of the source.

CAIR designated representative means, for a CAIR SO_2 source and each CAIR SO_2 unit at the source, the natural person who is authorized by the owners and operators of the source and all such units at the source, in accordance with subparts BBB and III of this part, to represent and legally bind each owner and operator in matters pertaining to the CAIR SO_2 Trading Program. If the CAIR SO_2 source is also a CAIR NO_X source, then this natural person shall be the same person as the CAIR designated representative under the CAIR NO_X Annual Trading Program. If the CAIR SO_2 source is also a CAIR NO_X Ozone Season source, then this natural person shall be the same person as the CAIR designated representative under the CAIR NO_X Ozone Season Trading Program. If the CAIR SO_2 source is also subject to the Acid Rain Program, then this natural person shall be the same person as the designated representative under the Acid Rain Program. If the CAIR SO_2 source is also subject to the Hg Budget Trading Program, then this natural person shall be the same person as the Hg designated representative under the Hg Budget Trading Program.

CAIR NO_X Annual Trading Program means a multi-state nitrogen oxides air pollution control and emission reduction program approved and administered by the Administrator in accordance with subparts AA through II of this part and § 51.123(o)(1) or (2) of this chapter or established by the Administrator in accordance with subparts AA through II of part 97 of this chapter and

§§ 51.123(p) and 52.35 of this chapter, as a means of mitigating interstate transport of fine particulates and nitrogen oxides.

CAIR NO_X Ozone Season source means a source that includes one or more CAIR NO_X Ozone Season units.

CAIR NO_X Ozone Season Trading Program means a multi-state nitrogen oxides air pollution control and emission reduction program approved and administered by the Administrator in accordance with subparts AAAA through IIII of this part and § 51.123(aa)(1) or (2) (and (bb)(1)), (bb)(2), or (dd) of this chapter or established by the Administrator in accordance with subparts AA through II of part 97 of this chapter and §§ 51.123(p) and 52.35 of this chapter, as a means of mitigating interstate transport of ozone and nitrogen oxides.

CAIR NO_X source means a source that is subject to the CAIR NO_X Ozone Season Trading Program.

CAIR permit means the legally binding and federally enforceable written document, or portion of such document, issued by the permitting authority under subpart CCC of this part, including any permit revisions, specifying the CAIR SO_2 Trading Program requirements applicable to a CAIR SO_2 source, to each CAIR SO_2 unit at the source, and to the owners and operators and the CAIR designated representative of the source and each such unit.

CAIR SO_2 allowance means a limited authorization issued by the Administrator under the Acid Rain Program, or by a permitting authority under provisions of a State implementation plan that are approved under § 51.124(o)(1) or (2) or (r) of this chapter or § 97.288 of this chapter,'', by designating the last sentence of the definition as paragraph (4), and by revising in paragraph (4) the words ''(Program or under the provisions of a State implementation plan that is approved under § 51.124(o)(1) or (2) of this chapter'' to read ''(Program, provisions of a State implementation plan that are approved under § 51.124(o)(1) or (2) or (r) of this chapter, or § 97.288 of this chapter, to emit sulfur dioxide during the control period of the specified calendar year for which the authorization is allocated or of any calendar year thereafter under the CAIR SO_2 Trading Program as follows:

(1) For one CAIR SO_2 allowance allocated for a control period in a year before 2010, one ton of sulfur dioxide, except as provided in § 96.254(b);

(2) For one CAIR SO_2 allowance allocated for a control period in 2010 through 2014, 0.50 ton of sulfur dioxide, except as provided in § 96.254(b); and

(3) For one CAIR SO_2 allowance allocated for a control period in 2015 or later, 0.35 ton of sulfur dioxide, except as provided in § 96.254(b).

An authorization to emit sulfur dioxide that is not issued under the Acid Rain Program or under the provisions of a State implementation plan that is approved under § 51.124(o)(1) or (2) of this chapter shall not be a CAIR SO_2 allowance.

CAIR SO_2 allowance deduction or *deduct CAIR SO_2 allowances* means the permanent withdrawal of CAIR SO_2 allowances by the Administrator from a compliance account, *e.g.*, in order to account for a specified number of tons of total sulfur dioxide emissions from all CAIR SO_2 units at a CAIR SO_2 source for a control period, determined in accordance with subpart HHH of this part, or to account for excess emissions.

CAIR SO_2 Allowance Tracking System means the system by which the Administrator records allocations, deductions, and transfers of CAIR SO_2 allowances under the CAIR SO_2 Trading Program. This is the same system as the Allowance Tracking System under § 72.2 of this chapter by which the Administrator records allocations, deduction, and transfers of Acid Rain SO_2 allowances under the Acid Rain Program.

CAIR SO_2 Allowance Tracking System account means an account in the CAIR SO_2 Allowance Tracking System established by the Administrator for purposes of recording the allocation, holding, transferring, or deducting of CAIR SO_2 allowances. Such allowances will be allocated, held, deducted, or transferred only as whole allowances.

CAIR SO_2 allowances held or *hold CAIR SO_2 allowances* means the CAIR SO_2 allowances recorded by the Administrator, or submitted to the Administrator for recordation, in accordance

with subparts FFF, GGG, and III of this part or part 73 of this chapter, in a CAIR SO_2 Allowance Tracking System account.

CAIR SO_2 emissions limitation means, for a CAIR SO_2 source, the tonnage equivalent, in SO_2 emissions in a control period, of the CAIR SO_2 allowances available for deduction for the source under § 96.254(a) and (b) for the control period.

CAIR SO_2 source means a source that includes one or more CAIR SO_2 units.

CAIR SO_2 Trading Program means a multi-state sulfur dioxide air pollution control and emission reduction program approved and administered by the Administrator in accordance with subparts AAA through III of this part and § 51.124(o)(1) or (2) of this chapter or established by the Administrator in accordance with subparts AAA through III of part 97 of this chapter and §§ 51.124(r) and 52.36 of this chapter, as a means of mitigating interstate transport of fine particulates and sulfur dioxide.

CAIR SO_2 unit means a unit that is subject to the CAIR SO_2 Trading Program under § 96.204 and, except for purposes of § 96.205, a CAIR SO_2 opt-in unit under subpart III of this part.

Clean Air Act or *CAA* means the Clean Air Act, 42 U.S.C. 7401, *et seq*.

Coal means any solid fuel classified as anthracite, bituminous, subbituminous, or lignite.

Coal-derived fuel means any fuel (whether in a solid, liquid, or gaseous state) produced by the mechanical, thermal, or chemical processing of coal.

Coal-fired means combusting any amount of coal or coal-derived fuel, alone, or in combination with any amount of any other fuel.

Cogeneration unit means a stationary, fossil-fuel-fired boiler or stationary, fossil-fuel-fired combustion turbine:

(1) Having equipment used to produce electricity and useful thermal energy for industrial, commercial, heating, or cooling purposes through the sequential use of energy; and

(2) Producing during the 12-month period starting on the date the unit first produces electricity and during any calendar year after the calendar year in which the unit first produces electricity—

(i) For a topping-cycle cogeneration unit,

(A) Useful thermal energy not less than 5 percent of total energy output; and

(B) Useful power that, when added to one-half of useful thermal energy produced, is not less then 42.5 percent of total energy input, if useful thermal energy produced is 15 percent or more of total energy output, or not less than 45 percent of total energy input, if useful thermal energy produced is less than 15 percent of total energy output.

(ii) For a bottoming-cycle cogeneration unit, useful power not less than 45 percent of total energy input;

(3) Provided that the total energy input under paragraphs (2)(i)(B) and (2)(ii) of this definition shall equal the unit's total energy input from all fuel except biomass if the unit is a boiler.

Combustion turbine means:

(1) An enclosed device comprising a compressor, a combustor, and a turbine and in which the flue gas resulting from the combustion of fuel in the combustor passes through the turbine, rotating the turbine; and

(2) If the enclosed device under paragraph (1) of this definition is combined cycle, any associated duct burner, heat recovery steam generator, and steam turbine.

Commence commercial operation means, with regard to a unit:

(1) To have begun to produce steam, gas, or other heated medium used to generate electricity for sale or use, including test generation, except as provided in § 96.205 and § 96.284(h).

(i) For a unit that is a CAIR SO_2 unit under § 96.204 on the later of November 15, 1990 or the date the unit commences commercial operation as defined in paragraph (1) of this definition and that subsequently undergoes a physical change (other than replacement of the unit by a unit at the same source), such date shall remain the date of commencement of commercial operation of the unit, which shall continue to be treated as the same unit.

(ii) For a unit that is a CAIR SO_2 unit under § 96.204 on the later of November 15, 1990 or the date the unit commences commercial operation as

defined in paragraph (1) of this definition and that is subsequently replaced by a unit at the same source (*e.g.*, repowered), such date shall remain the replaced unit's date of commencement of commercial operation, and the replacement unit shall be treated as a separate unit with a separate date for commencement of commercial operation as defined in paragraph (1) or (2) of this definition as appropriate.

(2) Notwithstanding paragraph (1) of this definition and except as provided in § 96.205, for a unit that is not a CAIR SO_2 unit under § 96.204 on the later of November 15, 1990 or the date the unit commences commercial operation as defined in paragraph (1) of this definition, the unit's date for commencement of commercial operation shall be the date on which the unit becomes a CAIR SO_2 unit under § 96.204.

(i) For a unit with a date for commencement of commercial operation as defined in paragraph (2) of this definition and that subsequently undergoes a physical change (other than replacement of the unit by a unit at the same source), such date shall remain the date of commencement of commercial operation of the unit, which shall continue to be treated as the same unit.

(ii) For a unit with a date for commencement of commercial operation as defined in paragraph (2) of this definition and that is subsequently replaced by a unit at the same source (*e.g.*, repowered), such date shall remain the replaced unit's date of commencement of commercial operation, and the replacement unit shall be treated as a separate unit with a separate date for commencement of commercial operation as defined in paragraph (1) or (2) of this definition as appropriate.

Commence operation means:

(1) To have begun any mechanical, chemical, or electronic process, including, with regard to a unit, start-up of a unit's combustion chamber, except as provided in § 96.284(h).

(2) For a unit that undergoes a physical change (other than replacement of the unit by a unit at the same source) after the date the unit commences operation as defined in paragraph (1) of this definition, such date shall remain the date of commencement of operation of the unit, which shall continue to be treated as the same unit.

(3) For a unit that is replaced by a unit at the same source (*e.g.*, repowered) after the date the unit commences operation as defined in paragraph (1) of this definition, such date shall remain the replaced unit's date of commencement of operation, and the replacement unit shall be treated as a separate unit with a separate date for commencement of operation as defined in paragraph (1), (2), or (3) of this definition as appropriate, except as provided in (96.284(h).

Compliance account means a CAIR SO_2 Allowance Tracking System account, established by the Administrator for a CAIR SO_2 source subject to an Acid Rain emissions limitations under § 73.31(a) or (b) of this chapter or for any other CAIR SO_2 source under subpart FFF or III of this part, in which any CAIR SO_2 allowance allocations for the CAIR SO_2 units at the source are initially recorded and in which are held any CAIR SO_2 allowances available for use for a control period in order to meet the source's CAIR SO_2 emissions limitation in accordance with § 96.254.

Continuous emission monitoring system or *CEMS* means the equipment required under subpart HHH of this part to sample, analyze, measure, and provide, by means of readings recorded at least once every 15 minutes (using an automated data acquisition and handling system (DAHS)), a permanent record of sulfur dioxide emissions, stack gas volumetric flow rate, stack gas moisture content, and oxygen or carbon dioxide concentration (as applicable), in a manner consistent with part 75 of this chapter. The following systems are the principal types of continuous emission monitoring systems required under subpart HHH of this part:

(1) A flow monitoring system, consisting of a stack flow rate monitor and an automated data acquisition and handling system and providing a permanent, continuous record of stack gas volumetric flow rate, in standard cubic feet per hour (scfh);

(2) A sulfur dioxide monitoring system, consisting of a SO_2 pollutant concentration monitor and an automated data acquisition handling system and providing a permanent, continuous

record of SO_2 emissions, in parts per million (ppm);

(3) A moisture monitoring system, as defined in §75.11(b)(2) of this chapter and providing a permanent, continuous record of the stack gas moisture content, in percent H_2O;

(4) A carbon dioxide monitoring system, consisting of a CO_2 pollutant concentration monitor (or an oxygen monitor plus suitable mathematical equations from which the CO_2 concentration is derived) and an automated data acquisition and handling system and providing a permanent, continuous record of CO_2 emissions, in percent CO_2; and

(5) An oxygen monitoring system, consisting of an O_2 concentration monitor and an automated data acquisition and handling system and providing a permanent, continuous record of O_2 in percent O_2.

Control period means the period beginning January 1 of a calendar year, except as provided in §96.206(c)(2), and ending on December 31 of the same year, inclusive.

Emissions means air pollutants exhausted from a unit or source into the atmosphere, as measured, recorded, and reported to the Administrator by the CAIR designated representative and as determined by the Administrator in accordance with subpart HHH of this part.

Excess emissions means any ton, or portion of a ton, of sulfur dioxide emitted by the CAIR SO_2 units at a CAIR SO_2 source during a control period that exceeds the CAIR SO_2 emissions limitation for the source, provided that any portion of a ton of excess emissions shall be treated as one ton of excess emissions.

Fossil fuel means natural gas, petroleum, coal, or any form of solid, liquid, or gaseous fuel derived from such material.

Fossil-fuel-fired means, with regard to a unit, combusting any amount of fossil fuel in any calendar year.

General account means a CAIR SO_2 Allowance Tracking System account, established under subpart FFF of this part, that is not a compliance account.

Generator means a device that produces electricity.

Heat input means, with regard to a specified period of time, the product (in mmBtu/time) of the gross calorific value of the fuel (in Btu/lb) divided by 1,000,000 Btu/mmBtu and multiplied by the fuel feed rate into a combustion device (in lb of fuel/time), as measured, recorded, and reported to the Administrator by the CAIR designated representative and determined by the Administrator in accordance with subpart HHH of this part and excluding the heat derived from preheated combustion air, recirculated flue gases, or exhaust from other sources.

Heat input rate means the amount of heat input (in mmBtu) divided by unit operating time (in hr) or, with regard to a specific fuel, the amount of heat input attributed to the fuel (in mmBtu) divided by the unit operating time (in hr) during which the unit combusts the fuel.

Hg Budget Trading Program means a multi-state Hg air pollution control and emission reduction program approved and administered by the Administrator in accordance subpart HHHH of part 60 of this chapter and §60.24(h)(6), or established by the Administrator under section 111 of the Clean Air Act, as a means of reducing national Hg emissions.

Life-of-the-unit, firm power contractual arrangement means a unit participation power sales agreement under which a utility or industrial customer reserves, or is entitled to receive, a specified amount or percentage of nameplate capacity and associated energy generated by any specified unit and pays its proportional amount of such unit's total costs, pursuant to a contract:

(1) For the life of the unit;

(2) For a cumulative term of no less than 30 years, including contracts that permit an election for early termination; or

(3) For a period no less than 25 years or 70 percent of the economic useful life of the unit determined as of the time the unit is built, with option rights to purchase or release some portion of the nameplate capacity and associated energy generated by the unit at the end of the period.

Maximum design heat input means the maximum amount of fuel per hour (in

Btu/hr) that a unit is capable of combusting on a steady state basis as of the initial installation of the unit as specified by the manufacturer of the unit.

Monitoring system means any monitoring system that meets the requirements of subpart HHH of this part, including a continuous emissions monitoring system, an alternative monitoring system, or an excepted monitoring system under part 75 of this chapter.

Most stringent State or Federal SO_2 emissions limitation means, with regard to a unit, the lowest SO_2 emissions limitation (in terms of lb/mmBtu) that is applicable to the unit under State or Federal law, regardless of the averaging period to which the emissions limitation applies.

Nameplate capacity means, starting from the initial installation of a generator, the maximum electrical generating output (in MWe) that the generator is capable of producing on a steady state basis and during continuous operation (when not restricted by seasonal or other deratings) as of such installation as specified by the manufacturer of the generator or, starting from the completion of any subsequent physical change in the generator resulting in an increase in the maximum electrical generating output (in MWe) that the generator is capable of producing on a steady state basis and during continuous operation (when not restricted by seasonal or other deratings), such increased maximum amount as of such completion as specified by the person conducting the physical change.

Operator means any person who operates, controls, or supervises a CAIR SO_2 unit or a CAIR SO_2 source and shall include, but not be limited to, any holding company, utility system, or plant manager of such a unit or source.

Owner means any of the following persons:

(1) With regard to a CAIR SO_2 source or a CAIR SO_2 unit at a source, respectively:

(i) Any holder of any portion of the legal or equitable title in a CAIR SO_2 unit at the source or the CAIR SO_2 unit;

(ii) Any holder of a leasehold interest in a CAIR SO_2 unit at the source or the CAIR SO_2 unit; or

(iii) Any purchaser of power from a CAIR SO_2 unit at the source or the CAIR SO_2 unit under a life-of-the-unit, firm power contractual arrangement; provided that, unless expressly provided for in a leasehold agreement, owner shall not include a passive lessor, or a person who has an equitable interest through such lessor, whose rental payments are not based (either directly or indirectly) on the revenues or income from such CAIR SO_2 unit; or

(2) With regard to any general account, any person who has an ownership interest with respect to the CAIR SO_2 allowances held in the general account and who is subject to the binding agreement for the CAIR authorized account representative to represent the person's ownership interest with respect to CAIR SO_2 allowances.

Permitting authority means the State air pollution control agency, local agency, other State agency, or other agency authorized by the Administrator to issue or revise permits to meet the requirements of the CAIR SO_2 Trading Program or, if no such agency has been so authorized, the Administrator.

Potential electrical output capacity means 33 percent of a unit's maximum design heat input, divided by 3,413 Btu/kWh, divided by 1,000 kWh/MWh, and multiplied by 8,760 hr/yr.

Receive or receipt of means, when referring to the permitting authority or the Administrator, to come into possession of a document, information, or correspondence (whether sent in hard copy or by authorized electronic transmission), as indicated in an official log, or by a notation made on the document, information, or correspondence, by the permitting authority or the Administrator in the regular course of business.

Recordation, *record*, or *recorded* means, with regard to CAIR SO_2 allowances, the movement of CAIR SO_2 allowances by the Administrator into or between CAIR SO_2 Allowance Tracking System accounts, for purposes of allocation, transfer, or deduction.

Reference method means any direct test method of sampling and analyzing

for an air pollutant as specified in § 75.22 of this chapter.

Replacement, replace, or *replaced* means, with regard to a unit, the demolishing of a unit, or the permanent shutdown and permanent disabling of a unit, and the construction of another unit (the replacement unit) to be used instead of the demolished or shutdown unit (the replaced unit).

Repowered means, with regard to a unit, replacement of a coal-fired boiler with one of the following coal-fired technologies at the same source as the coal-fired boiler:

(1) Atmospheric or pressurized fluidized bed combustion;

(2) Integrated gasification combined cycle;

(3) Magnetohydrodynamics;

(4) Direct and indirect coal-fired turbines;

(5) Integrated gasification fuel cells; or

(6) As determined by the Administrator in consultation with the Secretary of Energy, a derivative of one or more of the technologies under paragraphs (1) through (5) of this definition and any other coal-fired technology capable of controlling multiple combustion emissions simultaneously with improved boiler or generation efficiency and with significantly greater waste reduction relative to the performance of technology in widespread commercial use as of January 1, 2005.

Serial number means, for a CAIR SO_2 allowance, the unique identification number assigned to each CAIR SO_2 allowance by the Administrator.

Sequential use of energy means:

(1) For a topping-cycle cogeneration unit, the use of reject heat from electricity production in a useful thermal energy application or process; or

(2) For a bottoming-cycle cogeneration unit, the use of reject heat from useful thermal energy application or process in electricity production.

Solid waste incineration unit means a stationary, fossil-fuel-fired boiler or stationary, fossil-fuel-fired combustion turbine that is a ''solid waste incineration unit'' as defined in section 129(g)(1) of the Clean Air Act.

Source means all buildings, structures, or installations located in one or more contiguous or adjacent properties under common control of the same person or persons. For purposes of section 502(c) of the Clean Air Act, a ''source,'' including a ''source'' with multiple units, shall be considered a single ''facility.''

State means one of the States or the District of Columbia that adopts the CAIR SO_2 Trading Program pursuant to § 51.124 (o)(1) or (2) of this chapter.

Submit or serve means to send or transmit a document, information, or correspondence to the person specified in accordance with the applicable regulation:

(1) In person;

(2) By United States Postal Service; or

(3) By other means of dispatch or transmission and delivery. Compliance with any ''submission'' or ''service'' deadline shall be determined by the date of dispatch, transmission, or mailing and not the date of receipt.

Title V operating permit means a permit issued under title V of the Clean Air Act and part 70 or part 71 of this chapter.

Title V operating permit regulations means the regulations that the Administrator has approved or issued as meeting the requirements of title V of the Clean Air Act and part 70 or 71 of this chapter.

Ton means 2,000 pounds. For the purpose of determining compliance with the CAIR SO_2 emissions limitation, total tons of sulfur dioxide emissions for a control period shall be calculated as the sum of all recorded hourly emissions (or the mass equivalent of the recorded hourly emission rates) in accordance with subpart HHH of this part, but with any remaining fraction of a ton equal to or greater than 0.50 tons deemed to equal one ton and any remaining fraction of a ton less than 0.50 tons deemed to equal zero tons.

Topping-cycle cogeneration unit means a cogeneration unit in which the energy input to the unit is first used to produce useful power, including electricity, and at least some of the reject heat from the electricity production is then used to provide useful thermal energy.

Total energy input means, with regard to a cogeneration unit, total energy of all forms supplied to the cogeneration

unit, excluding energy produced by the cogeneration unit itself. Each form of energy supplied shall be measured by the lower heating value of that form of energy calculated as follows:

$$LHV = HHV - 10.55(W + 9H)$$

Where:

LHV = lower heating value of fuel in Btu/lb,
HHV = higher heating value of fuel in Btu/lb,
W = Weight % of moisture in fuel, and
H = Weight % of hydrogen in fuel.

Total energy output means, with regard to a cogeneration unit, the sum of useful power and useful thermal energy produced by the cogeneration unit.

Unit means a stationary, fossil-fuel-fired boiler or combustion turbine or other stationary, fossil-fuel-fired combustion device.

Unit operating day means a calendar day in which a unit combusts any fuel.

Unit operating hour or *hour of unit operation* means an hour in which a unit combusts any fuel.

Useful power means, with regard to a cogeneration unit, electricity or mechanical energy made available for use, excluding any such energy used in the power production process (which process includes, but is not limited to, any on-site processing or treatment of fuel combusted at the unit and any on-site emission controls).

Useful thermal energy means, with regard to a cogeneration unit, thermal energy that is:

(1) Made available to an industrial or commercial process (not a power production process), excluding any heat contained in condensate return or makeup water;

(2) Used in a heating application (*e.g.*, space heating or domestic hot water heating); or

(3) Used in a space cooling application (*i.e.*, thermal energy used by an absorption chiller).

Utility power distribution system means the portion of an electricity grid owned or operated by a utility and dedicated to delivering electricity to customers.

[70 FR 25362, May 12, 2005, as amended at 71 FR 25385, Apr. 28, 2006; 71 FR 74794, Dec. 13, 2006; 72 FR 59206, Oct. 19, 2007]

EDITORIAL NOTES: 1. At 71 FR 25386, Apr. 28, 2006, § 96.202 was amended in the definition of ''CAIR NO_X Ozone Season source'', by revising the words ''includes one or more CAIR NO_X Ozone Season unit'' to read ''is subject to the CAIR NO_X Ozone Season Trading Program''; however, those words do not exist in this section and the amendment could not be incorporated.

2. At 71 FR 74794, Dec. 13, 2006, § 96.202 was amended in the definition of ''CAIR SO_2 allowance'' in paragraph (4), by revising the words ''(Program, provisions'' to read ''Program, provisions''; however, paragraph (4) does not exist in this section and the amendment could not be incorporated.

§ 96.203 Measurements, abbreviations, and acronyms.

Measurements, abbreviations, and acronyms used in this subpart and subparts BBB through III are defined as follows:

Btu—British thermal unit
CO_2—carbon dioxide
H_2O—water
Hg—mercury
hr—hour
kW—kilowatt electrical
kWh—kilowatt hour
lb—pound
mmBtu—million Btu
MWe—megawatt electrical
MWh—megawatt hour
NO_X—nitrogen oxides
O_2—oxygen
ppm—parts per million
scfh—standard cubic feet per hour
SO_2—sulfur dioxide
yr—year

[71 FR 25387, Apr. 28, 2006]

§ 96.204 Applicability.

(a) Except as provided in paragraph (b) of this section:

(1) The following units in a State shall be CAIR SO_2 units, and any source that includes one or more such units shall be a CAIR SO_2 source, subject to the requirements of this subpart and subparts BBB through HHH of this part: any stationary, fossil-fuel-fired boiler or stationary, fossil-fuel-fired combustion turbine serving at any time, since the later of November 15, 1990 or the start-up of the unit's combustion chamber, a generator with nameplate capacity of more than 25 MWe producing electricity for sale.

(2) If a stationary boiler or stationary combustion turbine that, under paragraph (a)(1) of this section, is not a CAIR SO_2 unit begins to combust fossil

fuel or to serve a generator with nameplate capacity of more than 25 MWe producing electricity for sale, the unit shall become a CAIR SO_2 unit as provided in paragraph (a)(1) of this section on the first date on which it both combusts fossil fuel and serves such generator.

(b) The units in a State that meet the requirements set forth in paragraph (b)(1)(i), (b)(2)(i), or (b)(2)(ii) of this section shall not be CAIR SO_2 units:

(1)(i) Any unit that is a CAIR SO_2 unit under paragraph (a)(1) or (2) of this section:

(A) Qualifying as a cogeneration unit during the 12-month period starting on the date the unit first produces electricity and continuing to qualify as a cogeneration unit; and

(B) Not serving at any time, since the later of November 15, 1990 or the start-up of the unit's combustion chamber, a generator with nameplate capacity of more than 25 MWe supplying in any calendar year more than one-third of the unit's potential electric output capacity or 219,000 MWh, whichever is greater, to any utility power distribution system for sale.

(ii) If a unit qualifies as a cogeneration unit during the 12-month period starting on the date the unit first produces electricity and meets the requirements of paragraphs (b)(1)(i) of this section for at least one calendar year, but subsequently no longer meets all such requirements, the unit shall become a CAIR SO_2 unit starting on the earlier of January 1 after the first calendar year during which the unit first no longer qualifies as a cogeneration unit or January 1 after the first calendar year during which the unit no longer meets the requirements of paragraph (b)(1)(i)(B) of this section.

(2)(i) Any unit that is a CAIR SO_2 unit under paragraph (a)(1) or (2) of this section commencing operation before January 1, 1985:

(A) Qualifying as a solid waste incineration unit; and

(B) With an average annual fuel consumption of non-fossil fuel for 1985–1987 exceeding 80 percent (on a Btu basis) and an average annual fuel consumption of non-fossil fuel for any 3 consecutive calendar years after 1990 exceeding 80 percent (on a Btu basis).

(ii) Any unit that is a CAIR SO_2 unit under paragraph (a)(1) or (2) of this section commencing operation on or after January 1, 1985:

(A) Qualifying as a solid waste incineration unit; and

(B) With an average annual fuel consumption of non-fossil fuel for the first 3 calendar years of operation exceeding 80 percent (on a Btu basis) and an average annual fuel consumption of non-fossil fuel for any 3 consecutive calendar years after 1990 exceeding 80 percent (on a Btu basis).

(iii) If a unit qualifies as a solid waste incineration unit and meets the requirements of paragraph (b)(2)(i) or (ii) of this section for at least 3 consecutive calendar years, but subsequently no longer meets all such requirements, the unit shall become a CAIR SO_2 unit starting on the earlier of January 1 after the first calendar year during which the unit first no longer qualifies as a solid waste incineration unit or January 1 after the first 3 consecutive calendar years after 1990 for which the unit has an average annual fuel consumption of fossil fuel of 20 percent or more.

[71 FR 25387, Apr. 28, 2006]

§ 96.205 Retired unit exemption.

(a)(1) Any CAIR SO_2 unit that is permanently retired and is not a CAIR SO_2 opt-in unit under subpart III of this part shall be exempt from the CAIR SO_2 Trading Program, except for the provisions of this section, § 96.202, § 96.203, § 96.204, § 96.206(c)(4) through (7), § 96.207, § 96.208, and subparts BBB, FFF, and GGG of this part.

(2) The exemption under paragraph (a)(1) of this section shall become effective the day on which the CAIR SO_2 unit is permanently retired. Within 30 days of the unit's permanent retirement, the CAIR designated representative shall submit a statement to the permitting authority otherwise responsible for administering any CAIR permit for the unit and shall submit a copy of the statement to the Administrator. The statement shall state, in a format prescribed by the permitting authority, that the unit was permanently retired on a specific date and

will comply with the requirements of paragraph (b) of this section.

(3) After receipt of the statement under paragraph (a)(2) of this section, the permitting authority will amend any permit under subpart CCC of this part covering the source at which the unit is located to add the provisions and requirements of the exemption under paragraphs (a)(1) and (b) of this section.

(b) *Special provisions.* (1) A unit exempt under paragraph (a) of this section shall not emit any sulfur dioxide, starting on the date that the exemption takes effect.

(2) For a period of 5 years from the date the records are created, the owners and operators of a unit exempt under paragraph (a) of this section shall retain, at the source that includes the unit, records demonstrating that the unit is permanently retired. The 5-year period for keeping records may be extended for cause, at any time before the end of the period, in writing by the permitting authority or the Administrator. The owners and operators bear the burden of proof that the unit is permanently retired.

(3) The owners and operators and, to the extent applicable, the CAIR designated representative of a unit exempt under paragraph (a) of this section shall comply with the requirements of the CAIR SO_2 Trading Program concerning all periods for which the exemption is not in effect, even if such requirements arise, or must be complied with, after the exemption takes effect.

(4) A unit exempt under paragraph (a) of this section and located at a source that is required, or but for this exemption would be required, to have a title V operating permit shall not resume operation unless the CAIR designated representative of the source submits a complete CAIR permit application under § 96.222 for the unit not less than 18 months (or such lesser time provided by the permitting authority) before the later of January 1, 2010 or the date on which the unit resumes operation.

(5) On the earlier of the following dates, a unit exempt under paragraph (a) of this section shall lose its exemption:

(i) The date on which the CAIR designated representative submits a CAIR permit application for the unit under paragraph (b)(4) of this section;

(ii) The date on which the CAIR designated representative is required under paragraph (b)(4) of this section to submit a CAIR permit application for the unit; or

(iii) The date on which the unit resumes operation, if the CAIR designated representative is not required to submit a CAIR permit application for the unit.

(6) For the purpose of applying monitoring, reporting, and recordkeeping requirements under subpart HHH of this part, a unit that loses its exemption under paragraph (a) of this section shall be treated as a unit that commences commercial operation on the first date on which the unit resumes operation.

[70 FR 25362, May 12, 2005, as amended at 71 FR 25388, Apr. 28, 2006]

§ 96.206 Standard requirements.

(a) *Permit requirements.* (1) The CAIR designated representative of each CAIR SO_2 source required to have a title V operating permit and each CAIR SO_2 unit required to have a title V operating permit at the source shall:

(i) Submit to the permitting authority a complete CAIR permit application under § 96.222 in accordance with the deadlines specified in § 96.221; and

(ii) Submit in a timely manner any supplemental information that the permitting authority determines is necessary in order to review a CAIR permit application and issue or deny a CAIR permit.

(2) The owners and operators of each CAIR SO_2 source required to have a title V operating permit and each CAIR SO_2 unit required to have a title V operating permit at the source shall have a CAIR permit issued by the permitting authority under subpart CCC of this part for the source and operate the source and the unit in compliance with such CAIR permit.

(3) Except as provided in subpart III of this part, the owners and operators of a CAIR SO_2 source that is not otherwise required to have a title V operating permit and each CAIR SO_2 unit that is not otherwise required to have

a title V operating permit are not required to submit a CAIR permit application, and to have a CAIR permit, under subpart CCC of this part for such CAIR SO_2 source and such CAIR SO_2 unit.

(b) *Monitoring, reporting, and recordkeeping requirements.* (1) The owners and operators, and the CAIR designated representative, of each CAIR SO_2 source and each CAIR SO_2 unit at the source shall comply with the monitoring, reporting, and recordkeeping requirements of subpart HHH of this part.

(2) The emissions measurements recorded and reported in accordance with subpart HHH of this part shall be used to determine compliance by each CAIR SO_2 source with the CAIR SO_2 emissions limitation under paragraph (c) of this section.

(c) *Sulfur dioxide emission requirements.* (1) As of the allowance transfer deadline for a control period, the owners and operators of each CAIR SO_2 source and each CAIR SO_2 unit at the source shall hold, in the source's compliance account, a tonnage equivalent in CAIR SO_2 allowances available for compliance deductions for the control period, as determined in accordance with § 96.254(a) and (b), not less than the tons of total sulfur dioxide emissions for the control period from all CAIR SO_2 units at the source, as determined in accordance with subpart HHH of this part.

(2) A CAIR SO_2 unit shall be subject to the requirements under paragraph (c)(1) of this section for the control period starting on the later of January 1, 2010 or the deadline for meeting the unit's monitor certification requirements under § 96.270(b)(1), (2), or (5) and for each control period thereafter.

(3) A CAIR SO_2 allowance shall not be deducted, for compliance with the requirements under paragraph (c)(1) of this section, for a control period in a calendar year before the year for which the CAIR SO_2 allowance was allocated.

(4) CAIR SO_2 allowances shall be held in, deducted from, or transferred into or among CAIR SO_2 Allowance Tracking System accounts in accordance with subparts FFF, GGG, and III of this part.

(5) A CAIR SO_2 allowance is a limited authorization to emit sulfur dioxide in accordance with the CAIR SO_2 Trading Program. No provision of the CAIR SO_2 Trading Program, the CAIR permit application, the CAIR permit, or an exemption under § 96.205 and no provision of law shall be construed to limit the authority of the State or the United States to terminate or limit such authorization.

(6) A CAIR SO_2 allowance does not constitute a property right.

(7) Upon recordation by the Administrator under subpart FFF, GGG, or III of this part, every allocation, transfer, or deduction of a CAIR SO_2 allowance to or from a CAIR SO_2 source's compliance account is incorporated automatically in any CAIR permit of the source.

(d) *Excess emissions requirements*— If a CAIR SO_2 source emits sulfur dioxide during any control period in excess of the CAIR SO_2 emissions limitation, then:

(1) The owners and operators of the source and each CAIR SO_2 unit at the source shall surrender the CAIR SO_2 allowances required for deduction under § 96.254(d)(1) and pay any fine, penalty, or assessment or comply with any other remedy imposed, for the same violations, under the Clean Air Act or applicable State law; and

(2) Each ton of such excess emissions and each day of such control period shall constitute a separate violation of this subpart, the Clean Air Act, and applicable State law.

(e) *Recordkeeping and reporting requirements.* (1) Unless otherwise provided, the owners and operators of the CAIR SO_2 source and each CAIR SO_2 unit at the source shall keep on site at the source each of the following documents for a period of 5 years from the date the document is created. This period may be extended for cause, at any time before the end of 5 years, in writing by the permitting authority or the Administrator.

(i) The certificate of representation under § 96.213 for the CAIR designated representative for the source and each CAIR SO_2 unit at the source and all documents that demonstrate the truth of the statements in the certificate of

representation; provided that the certificate and documents shall be retained on site at the source beyond such 5-year period until such documents are superseded because of the submission of a new certificate of representation under § 96.213 changing the CAIR designated representative.

(ii) All emissions monitoring information, in accordance with subpart HHH of this part, provided that to the extent that subpart HHH of this part provides for a 3-year period for recordkeeping, the 3-year period shall apply.

(iii) Copies of all reports, compliance certifications, and other submissions and all records made or required under the CAIR SO_2 Trading Program.

(iv) Copies of all documents used to complete a CAIR permit application and any other submission under the CAIR SO_2 Trading Program or to demonstrate compliance with the requirements of the CAIR SO_2 Trading Program.

(2) The CAIR designated representative of a CAIR SO_2 source and each CAIR SO_2 unit at the source shall submit the reports required under the CAIR SO_2 Trading Program, including those under subpart HHH of this part.

(f) *Liability*. (1) Each CAIR SO_2 source and each CAIR SO_2 unit shall meet the requirements of the CAIR SO_2 Trading Program.

(2) Any provision of the CAIR SO_2 Trading Program that applies to a CAIR SO_2 source or the CAIR designated representative of a CAIR SO_2 source shall also apply to the owners and operators of such source and of the CAIR SO_2 units at the source.

(3) Any provision of the CAIR SO_2 Trading Program that applies to a CAIR SO_2 unit or the CAIR designated representative of a CAIR SO_2 unit shall also apply to the owners and operators of such unit.

(g) *Effect on other authorities*. No provision of the CAIR SO_2 Trading Program, a CAIR permit application, a CAIR permit, or an exemption under § 96.205 shall be construed as exempting or excluding the owners and operators, and the CAIR designated representative, of a CAIR SO_2 source or CAIR SO_2 unit from compliance with any other provision of the applicable, approved State implementation plan, a federally enforceable permit, or the Clean Air Act.

[70 FR 25362, May 12, 2005, as amended at 71 FR 25388, Apr. 28, 2006; 71 FR 74794, Dec. 13, 2006]

§ 96.207 Computation of time.

(a) Unless otherwise stated, any time period scheduled, under the CAIR SO_2 Trading Program, to begin on the occurrence of an act or event shall begin on the day the act or event occurs.

(b) Unless otherwise stated, any time period scheduled, under the CAIR SO_2 Trading Program, to begin before the occurrence of an act or event shall be computed so that the period ends the day before the act or event occurs.

(c) Unless otherwise stated, if the final day of any time period, under the CAIR SO_2 Trading Program, falls on a weekend or a State or Federal holiday, the time period shall be extended to the next business day.

§ 96.208 Appeal procedures.

The appeal procedures for decisions of the Administrator under the CAIR SO_2 Trading Program are set forth in part 78 of this chapter.

Subpart BBB—CAIR Designated Representative for CAIR SO_2 Sources

SOURCE: 70 FR 25362, May 12, 2005, unless otherwise noted.

§ 96.210 Authorization and responsibilities of CAIR designated representative.

(a) Except as provided under § 96.211, each CAIR SO_2 source, including all CAIR SO_2 units at the source, shall have one and only one CAIR designated representative, with regard to all matters under the CAIR SO_2 Trading Program concerning the source or any CAIR SO_2 unit at the source.

(b) The CAIR designated representative of the CAIR SO_2 source shall be selected by an agreement binding on the owners and operators of the source and all CAIR SO_2 units at the source and shall act in accordance with the certification statement in § 96.213(a)(4)(iv).

(c) Upon receipt by the Administrator of a complete certificate of representation under § 96.213, the CAIR designated representative of the source shall represent and, by his or her representations, actions, inactions, or submissions, legally bind each owner and operator of the CAIR SO_2 source represented and each CAIR SO_2 unit at the source in all matters pertaining to the CAIR SO_2 Trading Program, notwithstanding any agreement between the CAIR designated representative and such owners and operators. The owners and operators shall be bound by any decision or order issued to the CAIR designated representative by the permitting authority, the Administrator, or a court regarding the source or unit.

(d) No CAIR permit will be issued, no emissions data reports will be accepted, and no CAIR SO_2 Allowance Tracking System account will be established for a CAIR SO_2 unit at a source, until the Administrator has received a complete certificate of representation under § 96.213 for a CAIR designated representative of the source and the CAIR SO_2 units at the source.

(e)(1) Each submission under the CAIR SO_2 Trading Program shall be submitted, signed, and certified by the CAIR designated representative for each CAIR SO_2 source on behalf of which the submission is made. Each such submission shall include the following certification statement by the CAIR designated representative: ''I am authorized to make this submission on behalf of the owners and operators of the source or units for which the submission is made. I certify under penalty of law that I have personally examined, and am familiar with, the statements and information submitted in this document and all its attachments. Based on my inquiry of those individuals with primary responsibility for obtaining the information, I certify that the statements and information are to the best of my knowledge and belief true, accurate, and complete. I am aware that there are significant penalties for submitting false statements and information or omitting required statements and information, including the possibility of fine or imprisonment.''

(2) The permitting authority and the Administrator will accept or act on a submission made on behalf of owner or operators of a CAIR SO_2 source or a CAIR SO_2 unit only if the submission has been made, signed, and certified in accordance with paragraph (e)(1) of this section.

§ 96.211 Alternate CAIR designated representative.

(a) A certificate of representation under § 96.213 may designate one and only one alternate CAIR designated representative, who may act on behalf of the CAIR designated representative. The agreement by which the alternate CAIR designated representative is selected shall include a procedure for authorizing the alternate CAIR designated representative to act in lieu of the CAIR designated representative.

(b) Upon receipt by the Administrator of a complete certificate of representation under § 96.213, any representation, action, inaction, or submission by the alternate CAIR designated representative shall be deemed to be a representation, action, inaction, or submission by the CAIR designated representative.

(c) Except in this section and §§ 96.202, 96.210(a) and (d), 96.212, 96.213, 96.215, 96.251, and 96.282, whenever the term ''CAIR designated representative'' is used in subparts AAA through III of this part, the term shall be construed to include the CAIR designated representative or any alternate CAIR designated representative.

[70 FR 25362, May 12, 2005, as amended at 71 FR 25388, Apr. 28, 2006]

§ 96.212 Changing CAIR designated representative and alternate CAIR designated representative; changes in owners and operators.

(a) *Changing CAIR designated representative.* The CAIR designated representative may be changed at any time upon receipt by the Administrator of a superseding complete certificate of representation under § 96.213. Notwithstanding any such change, all representations, actions, inactions, and submissions by the previous CAIR designated representative before the time and date when the Administrator receives the superseding certificate of

representation shall be binding on the new CAIR designated representative and the owners and operators of the CAIR SO_2 source and the CAIR SO_2 units at the source.

(b) *Changing alternate CAIR designated representative.* The alternate CAIR designated representative may be changed at any time upon receipt by the Administrator of a superseding complete certificate of representation under § 96.213. Notwithstanding any such change, all representations, actions, inactions, and submissions by the previous alternate CAIR designated representative before the time and date when the Administrator receives the superseding certificate of representation shall be binding on the new alternate CAIR designated representative and the owners and operators of the CAIR SO_2 source and the CAIR SO_2 units at the source.

(c) *Changes in owners and operators.* (1) In the event an owner or operator of a CAIR SO_2 source or a CAIR SO_2 unit is not included in the list of owners and operators in the certificate of representation under § 96.213, such owner or operator shall be deemed to be subject to and bound by the certificate of representation, the representations, actions, inactions, and submissions of the CAIR designated representative and any alternate CAIR designated representative of the source or unit, and the decisions and orders of the permitting authority, the Administrator, or a court, as if the owner or operator were included in such list.

(2) Within 30 days following any change in the owners and operators of a CAIR SO_2 source or a CAIR SO_2 unit, including the addition of a new owner or operator, the CAIR designated representative or any alternate CAIR designated representative shall submit a revision to the certificate of representation under § 96.213 amending the list of owners and operators to include the change.

[70 FR 25362, May 12, 2005, as amended at 71 FR 25388, Apr. 28, 2006]

§ 96.213 Certificate of representation.

(a) A complete certificate of representation for a CAIR designated representative or an alternate CAIR designated representative shall include the following elements in a format prescribed by the Administrator:

(1) Identification of the CAIR SO_2 source, and each CAIR SO_2 unit at the source, for which the certificate of representation is submitted, including identification and nameplate capacity of each generator served by each such unit.

(2) The name, address, e-mail address (if any), telephone number, and facsimile transmission number (if any) of the CAIR designated representative and any alternate CAIR designated representative.

(3) A list of the owners and operators of the CAIR SO_2 source and of each CAIR SO_2 unit at the source.

(4) The following certification statements by the CAIR designated representative and any alternate CAIR designated representative—

(i) ''I certify that I was selected as the CAIR designated representative or alternate CAIR designated representative, as applicable, by an agreement binding on the owners and operators of the source and each CAIR SO_2 unit at the source.''

(ii) ''I certify that I have all the necessary authority to carry out my duties and responsibilities under the CAIR SO_2 Trading Program on behalf of the owners and operators of the source and of each CAIR SO_2 unit at the source and that each such owner and operator shall be fully bound by my representations, actions, inactions, or submissions.''

(iii) ''I certify that the owners and operators of the source and of each CAIR SO_2 unit at the source shall be bound by any order issued to me by the Administrator, the permitting authority, or a court regarding the source or unit.''

(iv) ''Where there are multiple holders of a legal or equitable title to, or a leasehold interest in, a CAIR SO_2 unit, or where a utility or industrial customer purchases power from a CAIR SO_2 unit under a life-of-the-unit, firm power contractual arrangement, I certify that: I have given a written notice of my selection as the 'CAIR designated representative' or 'alternate CAIR designated representative', as applicable, and of the agreement by which I was selected to each owner and

operator of the source and of each CAIR SO_2 unit at the source; and CAIR SO_2 allowances and proceeds of transactions involving CAIR SO_2 allowances will be deemed to be held or distributed in proportion to each holder's legal, equitable, leasehold, or contractual reservation or entitlement, except that, if such multiple holders have expressly provided for a different distribution of CAIR SO_2 allowances by contract, CAIR SO_2 allowances and proceeds of transactions involving CAIR SO_2 allowances will be deemed to be held or distributed in accordance with the contract.''

(5) The signature of the CAIR designated representative and any alternate CAIR designated representative and the dates signed.

(b) Unless otherwise required by the permitting authority or the Administrator, documents of agreement referred to in the certificate of representation shall not be submitted to the permitting authority or the Administrator. Neither the permitting authority nor the Administrator shall be under any obligation to review or evaluate the sufficiency of such documents, if submitted.

[70 FR 25362, May 12, 2005, as amended at 71 FR 25388, Apr. 28, 2006]

§ 96.214 Objections concerning CAIR designated representative.

(a) Once a complete certificate of representation under § 96.213 has been submitted and received, the permitting authority and the Administrator will rely on the certificate of representation unless and until a superseding complete certificate of representation under § 96.213 is received by the Administrator.

(b) Except as provided in § 96.212(a) or (b), no objection or other communication submitted to the permitting authority or the Administrator concerning the authorization, or any representation, action, inaction, or submission, of the CAIR designated representative shall affect any representation, action, inaction, or submission of the CAIR designated representative or the finality of any decision or order by the permitting authority or the Administrator under the CAIR SO_2 Trading Program.

(c) Neither the permitting authority nor the Administrator will adjudicate any private legal dispute concerning the authorization or any representation, action, inaction, or submission of any CAIR designated representative, including private legal disputes concerning the proceeds of CAIR SO_2 allowance transfers.

§ 96.215 Delegation by CAIR designated representative and alternate CAIR designated representative.

(a) A CAIR designated representative may delegate, to one or more natural persons, his or her authority to make an electronic submission to the Administrator provided for or required under this part.

(b) An alternate CAIR designated representative may delegate, to one or more natural persons, his or her authority to make an electronic submission to the Administrator provided for or required under this part.

(c) In order to delegate authority to make an electronic submission to the Administrator in accordance with paragraph (a) or (b) of this section, the CAIR designated representative or alternate CAIR designated representative, as appropriate, must submit to the Administrator a notice of delegation, in a format prescribed by the Administrator, that includes the following elements:

(1) The name, address, e-mail address, telephone number, and facsimile transmission number (if any) of such CAIR designated representative or alternate CAIR designated representative;

(2) The name, address, e-mail address, telephone number, and facsimile transmission number (if any) of each such natural person ''referred to as an ''agent'');

(3) For each such natural person, a list of the type or types of electronic submissions under paragraph (a) or (b) of this section for which authority is delegated to him or her; and

(4) The following certification statements by such CAIR designated representative or alternate CAIR designated representative:

(i) ''I agree that any electronic submission to the Administrator that is by an agent identified in this notice of

delegation and of a type listed for such agent in this notice of delegation and that is made when I am a CAIR designated representative or alternate CAIR designated representative, as appropriate, and before this notice of delegation is superseded by another notice of delegation under 40 CFR 96.215(d) shall be deemed to be an electronic submission by me.''

(ii) ''Until this notice of delegation is superseded by another notice of delegation under 40 CFR 96.215(d), I agree to maintain an e-mail account and to notify the Administrator immediately of any change in my e-mail address unless all delegation of authority by me under 40 CFR 96.215 is terminated.''.

(d) A notice of delegation submitted under paragraph (c) of this section shall be effective, with regard to the CAIR designated representative or alternate CAIR designated representative identified in such notice, upon receipt of such notice by the Administrator and until receipt by the Administrator of a superseding notice of delegation submitted by such CAIR designated representative or alternate CAIR designated representative, as appropriate. The superseding notice of delegation may replace any previously identified agent, add a new agent, or eliminate entirely any delegation of authority.

(e) Any electronic submission covered by the certification in paragraph (c)(4)(i) of this section and made in accordance with a notice of delegation effective under paragraph (d) of this section shall be deemed to be an electronic submission by the CAIR designated representative or alternate CAIR designated representative submitting such notice of delegation.

[71 FR 25388, Apr. 28, 2006, as amended at 71 FR 74794, Dec. 13, 2006]

Subpart CCC—Permits

SOURCE: 70 FR 25362, May 12, 2005, unless otherwise noted.

§ 96.220 General CAIR SO_2 Trading Program permit requirements.

(a) For each CAIR SO_2 source required to have a title V operating permit or required, under subpart III of this part, to have a title V operating permit or other federally enforceable permit, such permit shall include a CAIR permit administered by the permitting authority for the title V operating permit or the federally enforceable permit as applicable. The CAIR portion of the title V permit or other federally enforceable permit as applicable shall be administered in accordance with the permitting authority's title V operating permits regulations promulgated under part 70 or 71 of this chapter or the permitting authority's regulations for other federally enforceable permits as applicable, except as provided otherwise by § 96.205, this subpart, and subpart III of this part.

(b) Each CAIR permit shall contain, with regard to the CAIR SO_2 source and the CAIR SO_2 units at the source covered by the CAIR permit, all applicable CAIR SO_2 Trading Program, CAIR NO_X Annual Trading Program, and CAIR NO_X Ozone Season Trading Program requirements and shall be a complete and separable portion of the title V operating permit or other federally enforceable permit under paragraph (a) of this section.

[70 FR 25362, May 12, 2005, as amended at 71 FR 25388, Apr. 28, 2006]

§ 96.221 Submission of CAIR permit applications.

(a) *Duty to apply*. The CAIR designated representative of any CAIR SO_2 source required to have a title V operating permit shall submit to the permitting authority a complete CAIR permit application under § 96.222 for the source covering each CAIR SO_2 unit at the source at least 18 months (or such lesser time provided by the permitting authority) before the later of January 1, 2010 or the date on which the CAIR SO_2 unit commences commercial operation, except as provided in § 96.283(a).

(b) *Duty to Reapply*. For a CAIR SO_2 source required to have a title V operating permit, the CAIR designated representative shall submit a complete CAIR permit application under § 96.222 for the source covering each CAIR SO_2 unit at the source to renew the CAIR

permit in accordance with the permitting authority's title V operating permits regulations addressing permit renewal, except as provided in § 96.283(b).

[70 FR 25362, May 12, 2005, as amended at 71 FR 25388, Apr. 28, 2006]

§ 96.222 Information requirements for CAIR permit applications.

A complete CAIR permit application shall include the following elements concerning the CAIR SO_2 source for which the application is submitted, in a format prescribed by the permitting authority:

(a) Identification of the CAIR SO_2 source;

(b) Identification of each CAIR SO_2 unit at the CAIR SO_2 source; and

(c) The standard requirements under § 96.206.

§ 96.223 CAIR permit contents and term.

(a) Each CAIR permit will contain, in a format prescribed by the permitting authority, all elements required for a complete CAIR permit application under § 96.222.

(b) Each CAIR permit is deemed to incorporate automatically the definitions of terms under § 96.202 and, upon recordation by the Administrator under subpart FFF, GGG, or III of this part, every allocation, transfer, or deduction of a CAIR SO_2 allowance to or from the compliance account of the CAIR SO_2 source covered by the permit.

(c) The term of the CAIR permit will be set by the permitting authority, as necessary to facilitate coordination of the renewal of the CAIR permit with issuance, revision, or renewal of the CAIR SO_2 source's title V operating permit or other federally enforceable permit as applicable.

§ 96.224 CAIR permit revisions.

Except as provided in § 96.223(b), the permitting authority will revise the CAIR permit, as necessary, in accordance with the permitting authority's title V operating permits regulations or the permitting authority's regulations for other federally enforceable permits as applicable addressing permit revisions.

Subparts DDD—EEE [Reserved]

Subpart FFF—CAIR SO_2 Allowance Tracking System

SOURCE: 70 FR 25362, May 12, 2005, unless otherwise noted.

§ 96.250 [Reserved]

§ 96.251 Establishment of accounts.

(a) *Compliance accounts.* Except as provided in § 96.284(e), upon receipt of a complete certificate of representation under § 96.213, the Administrator will establish a compliance account for the CAIR SO_2 source for which the certificate of representation was submitted, unless the source already has a compliance account.

(b) *General accounts*—(1) *Application for general account.* (i) Any person may apply to open a general account for the purpose of holding and transferring CAIR SO_2 allowances. An application for a general account may designate one and only one CAIR authorized account representative and one and only one alternate CAIR authorized account representative who may act on behalf of the CAIR authorized account representative. The agreement by which the alternate CAIR authorized account representative is selected shall include a procedure for authorizing the alternate CAIR authorized account representative to act in lieu of the CAIR authorized account representative.

(ii) A complete application for a general account shall be submitted to the Administrator and shall include the following elements in a format prescribed by the Administrator:

(A) Name, mailing address, e-mail address (if any), telephone number, and facsimile transmission number (if any) of the CAIR authorized account representative and any alternate CAIR authorized account representative;

(B) Organization name and type of organization, if applicable;

(C) A list of all persons subject to a binding agreement for the CAIR authorized account representative and any alternate CAIR authorized account representative to represent their ownership interest with respect to the CAIR SO_2 allowances held in the general account;

(D) The following certification statement by the CAIR authorized account representative and any alternate CAIR authorized account representative: ''I certify that I was selected as the CAIR authorized account representative or the alternate CAIR authorized account representative, as applicable, by an agreement that is binding on all persons who have an ownership interest with respect to CAIR SO_2 allowances held in the general account. I certify that I have all the necessary authority to carry out my duties and responsibilities under the CAIR SO_2 Trading Program on behalf of such persons and that each such person shall be fully bound by my representations, actions, inactions, or submissions and by any order or decision issued to me by the Administrator or a court regarding the general account.''

(E) The signature of the CAIR authorized account representative and any alternate CAIR authorized account representative and the dates signed.

(iii) Unless otherwise required by the permitting authority or the Administrator, documents of agreement referred to in the application for a general account shall not be submitted to the permitting authority or the Administrator. Neither the permitting authority nor the Administrator shall be under any obligation to review or evaluate the sufficiency of such documents, if submitted.

(2) *Authorization of CAIR authorized account representative and alternate CAIR authorized account representative.* (i) Upon receipt by the Administrator of a complete application for a general account under paragraph (b)(1) of this section:

(A) The Administrator will establish a general account for the person or persons for whom the application is submitted.

(B) The CAIR authorized account representative and any alternate CAIR authorized account representative for the general account shall represent and, by his or her representations, actions, inactions, or submissions, legally bind each person who has an ownership interest with respect to CAIR SO_2 allowances held in the general account in all matters pertaining to the CAIR SO_2 Trading Program, notwithstanding any agreement between the CAIR authorized account representative or any alternate CAIR authorized account representative and such person. Any such person shall be bound by any order or decision issued to the CAIR authorized account representative or any alternate CAIR authorized account representative by the Administrator or a court regarding the general account.

(C) Any representation, action, inaction, or submission by any alternate CAIR authorized account representative shall be deemed to be a representation, action, inaction, or submission by the CAIR authorized account representative.

(ii) Each submission concerning the general account shall be submitted, signed, and certified by the CAIR authorized account representative or any alternate CAIR authorized account representative for the persons having an ownership interest with respect to CAIR SO_2 allowances held in the general account. Each such submission shall include the following certification statement by the CAIR authorized account representative or any alternate CAIR authorized account representative: ''I am authorized to make this submission on behalf of the persons having an ownership interest with respect to the CAIR SO_2 allowances held in the general account. I certify under penalty of law that I have personally examined, and am familiar with, the statements and information submitted in this document and all its attachments. Based on my inquiry of those individuals with primary responsibility for obtaining the information, I certify that the statements and information are to the best of my knowledge and belief true, accurate, and complete. I am aware that there are significant penalties for submitting false statements and information or omitting required statements and information, including the possibility of fine or imprisonment.''

(iii) The Administrator will accept or act on a submission concerning the general account only if the submission has been made, signed, and certified in accordance with paragraph (b)(2)(ii) of this section.

(3) *Changing CAIR authorized account representative and alternate CAIR authorized account representative; changes in persons with ownership interest.* (i) The CAIR authorized account representative for a general account may be changed at any time upon receipt by the Administrator of a superseding complete application for a general account under paragraph (b)(1) of this section. Notwithstanding any such change, all representations, actions, inactions, and submissions by the previous CAIR authorized account representative before the time and date when the Administrator receives the superseding application for a general account shall be binding on the new CAIR authorized account representative and the persons with an ownership interest with respect to the CAIR SO_2 allowances in the general account.

(ii) The alternate CAIR authorized account representative for a general account may be changed at any time upon receipt by the Administrator of a superseding complete application for a general account under paragraph (b)(1) of this section. Notwithstanding any such change, all representations, actions, inactions, and submissions by the previous alternate CAIR authorized account representative before the time and date when the Administrator receives the superseding application for a general account shall be binding on the new alternate CAIR authorized account representative and the persons with an ownership interest with respect to the CAIR SO_2 allowances in the general account.

(iii)(A) In the event a person having an ownership interest with respect to CAIR SO_2 allowances in the general account is not included in the list of such persons in the application for a general account, such person shall be deemed to be subject to and bound by the application for a general account, the representation, actions, inactions, and submissions of the CAIR authorized account representative and any alternate CAIR authorized account representative of the account, and the decisions and orders of the Administrator or a court, as if the person were included in such list.

(B) Within 30 days following any change in the persons having an ownership interest with respect to CAIR SO_2 allowances in the general account, including the addition of a new person, the CAIR authorized account representative or any alternate CAIR authorized account representative shall submit a revision to the application for a general account amending the list of persons having an ownership interest with respect to the CAIR SO_2 allowances in the general account to include the change.

(4) *Objections concerning CAIR authorized account representative and alternate CAIR authorized account representative.* (i) Once a complete application for a general account under paragraph (b)(1) of this section has been submitted and received, the Administrator will rely on the application unless and until a superseding complete application for a general account under paragraph (b)(1) of this section is received by the Administrator.

(ii) Except as provided in paragraph (b)(3)(i) or (ii) of this section, no objection or other communication submitted to the Administrator concerning the authorization, or any representation, action, inaction, or submission of the CAIR authorized account representative or any alternate CAIR authorized account representative for a general account shall affect any representation, action, inaction, or submission of the CAIR authorized account representative or any alternate CAIR authorized account representative or the finality of any decision or order by the Administrator under the CAIR SO_2 Trading Program.

(iii) The Administrator will not adjudicate any private legal dispute concerning the authorization or any representation, action, inaction, or submission of the CAIR authorized account representative or any alternate CAIR authorized account representative for a general account, including private legal disputes concerning the proceeds of CAIR SO_2 allowance transfers.

(5) *Delegation by CAIR authorized account representative and alternate CAIR authorized account representative.* (i) A CAIR authorized account representative may delegate, to one or more natural persons, his or her authority to make an electronic submission to the

Administrator provided for or required under subparts FFF and GGG of this part.

(ii) An alternate CAIR authorized account representative may delegate, to one or more natural persons, his or her authority to make an electronic submission to the Administrator provided for or required under subparts FFF and GGG of this part.

(iii) In order to delegate authority to make an electronic submission to the Administrator in accordance with paragraph (b)(5)(i) or (ii) of this section, the CAIR authorized account representative or alternate CAIR authorized account representative, as appropriate, must submit to the Administrator a notice of delegation, in a format prescribed by the Administrator, that includes the following elements:

(A) The name, address, e-mail address, telephone number, and facsimile transmission number (if any) of such CAIR authorized account representative or alternate CAIR authorized account representative;

(B) The name, address, e-mail address, telephone number, and, facsimile transmission number (if any) of each such natural person (referred to as an ''agent'');

(C) For each such natural person, a list of the type or types of electronic submissions under paragraph (b)(5)(i) or (ii) of this section for which authority is delegated to him or her;

(D) The following certification statement by such CAIR authorized account representative or alternate CAIR authorized account representative: ''I agree that any electronic submission to the Administrator that is by an agent identified in this notice of delegation and of a type listed for such agent in this notice of delegation and that is made when I am a CAIR authorized account representative or alternate CAIR authorized representative, as appropriate, and before this notice of delegation is superseded by another notice of delegation under 40 CFR 96.251(b)(5)(iv) shall be deemed to be an electronic submission by me.''; and

(E) The following certification statement by such CAIR authorized account representative or alternate CAIR authorized account representative: ''Until this notice of delegation is superseded by another notice of delegation under 40 CFR 96.251 (b)(5)(iv), I agree to maintain an e-mail account and to notify the Administrator immediately of any change in my e-mail address unless all delegation of authority by me under 40 CFR 96.251 (b)(5) is terminated.''

(iv) A notice of delegation submitted under paragraph (b)(5)(iii) of this section shall be effective, with regard to the CAIR authorized account representative or alternate CAIR authorized account representative identified in such notice, upon receipt of such notice by the Administrator and until receipt by the Administrator of a superseding notice of delegation submitted by such CAIR authorized account representative or alternate CAIR authorized account representative, as appropriate. The superseding notice of delegation may replace any previously identified agent, add a new agent, or eliminate entirely any delegation of authority.

(v) Any electronic submission covered by the certification in paragraph (b)(5)(iii)(D) of this section and made in accordance with a notice of delegation effective under paragraph (b)(5)(iv) of this section shall be deemed to be an electronic submission by the CAIR designated representative or alternate CAIR designated representative submitting such notice of delegation.

(c) *Account identification.* The Administrator will assign a unique identifying number to each account established under paragraph (a) or (b) of this section.

[70 FR 25362, May 12, 2005, as amended at 71 FR 25388, Apr. 28, 2006; 71 FR 74794, Dec. 13, 2006]

§ 96.252 Responsibilities of CAIR authorized account representative.

Following the establishment of a CAIR SO_2 Allowance Tracking System account, all submissions to the Administrator pertaining to the account, including, but not limited to, submissions concerning the deduction or transfer of CAIR SO_2 allowances in the account, shall be made only by the CAIR authorized account representative for the account.

§ 96.253 Recordation of CAIR SO_2 allowances.

(a)(1) After a compliance account is established under § 96.251(a) or § 73.31(a) or (b) of this chapter, the Administrator will record in the compliance account any CAIR SO_2 allowance allocated to any CAIR SO_2 unit at the source for each of the 30 years starting the later of 2010 or the year in which the compliance account is established and any CAIR SO_2 allowance allocated for each of the 30 years starting the later of 2010 or the year in which the compliance account is established and transferred to the source in accordance with subpart GGG of this part or subpart D of part 73 of this chapter.

(2) In 2011 and each year thereafter, after Administrator has completed all deductions under § 96.254(b), the Administrator will record in the compliance account any CAIR SO_2 allowance allocated to any CAIR SO_2 unit at the source for the new 30th year (*i.e.*, the year that is 30 years after the calendar year for which such deductions are or could be made) and any CAIR SO_2 allowance allocated for the new 30th year and transferred to the source in accordance with subpart GGG of this part or subpart D of part 73 of this chapter.

(b)(1) After a general account is established under § 96.251(b) or § 73.31(c) of this chapter, the Administrator will record in the general account any CAIR SO_2 allowance allocated for each of the 30 years starting the later of 2010 or the year in which the general account is established and transferred to the general account in accordance with subpart GGG of this part or subpart D of part 73 of this chapter.

(2) In 2011 and each year thereafter, after Administrator has completed all deductions under § 96.254(b), the Administrator will record in the general account any CAIR SO_2 allowance allocated for the new 30th year (*i.e.*, the year that is 30 years after the calendar year for which such deductions are or could be made) and transferred to the general account in accordance with subpart GGG of this part or subpart D of part 73 of this chapter.

(c) *Serial numbers for allocated CAIR SO_2 allowances.* When recording the allocation of CAIR SO_2 allowances issued by a permitting authority under § 96.288, the Administrator will assign each such CAIR SO_2 allowance a unique identification number that will include digits identifying the year of the control period for which the CAIR SO_2 allowance is allocated.

§ 96.254 Compliance with CAIR SO_2 emissions limitation.

(a) *Allowance transfer deadline.* The CAIR SO_2 allowances are available to be deducted for compliance with a source's CAIR SO_2 emissions limitation for a control period in a given calendar year only if the CAIR SO_2 allowances:

(1) Were allocated for the control period in the year or a prior year; and

(2) Are held in the compliance account as of the allowance transfer deadline for the control period or are transferred into the compliance account by a CAIR SO_2 allowance transfer correctly submitted for recordation under §§ 96.260 and 96.261 by the allowance transfer deadline for the control period.

(b) *Deductions for compliance.* Following the recordation, in accordance with § 96.261, of CAIR SO_2 allowance transfers submitted for recordation in a source's compliance account by the allowance transfer deadline for a control period, the Administrator will deduct from the compliance account CAIR SO_2 allowances available under paragraph (a) of this section in order to determine whether the source meets the CAIR SO_2 emissions limitation for the control period as follows:

(1) For a CAIR SO_2 source subject to an Acid Rain emissions limitation, the Administrator will, in the following order:

(i) Deduct the amount of CAIR SO_2 allowances, available under paragraph (a) of this section and not issued by a permitting authority under § 96.288, that is required under §§ 73.35(b) and (c) of this part. If there are sufficient CAIR SO_2 allowances to complete this deduction, the deduction will be treated as satisfying the requirements of §§ 73.35(b) and (c) of this chapter.

(ii) Deduct the amount of CAIR SO_2 allowances, not issued by a permitting authority under § 96.288, that is required under §§ 73.35(d) and 77.5 of this part. If there are sufficient CAIR SO_2 allowances to complete this deduction,

the deduction will be treated as satisfying the requirements of §§ 73.35(d) and 77.5 of this chapter.

(iii) Treating the CAIR SO_2 allowances deducted under paragraph (b)(1)(i) of this section as also being deducted under this paragraph (b)(1)(iii), deduct CAIR SO_2 allowances available under paragraph (a) of this section (including any issued by a permitting authority under § 96.288) in order to determine whether the source meets the CAIR SO_2 emissions limitation for the control period, as follows:

(A) Until the tonnage equivalent of the CAIR SO_2 allowances deducted equals, or exceeds in accordance with paragraphs (c)(1) and (2) of this section, the number of tons of total sulfur dioxide emissions, determined in accordance with subpart HHH of this part, from all CAIR SO_2 units at the source for the control period; or

(B) If there are insufficient CAIR SO_2 allowances to complete the deductions in paragraph (b)(1)(iii)(A) of this section, until no more CAIR SO_2 allowances available under paragraph (a) of this section (including any issued by a permitting authority under § 96.288) remain in the compliance account.

(2) For a CAIR SO_2 source not subject to an Acid Rain emissions limitation, the Administrator will deduct CAIR SO_2 allowances available under paragraph (a) of this section (including any issued by a permitting authority under § 96.288) in order to determine whether the source meets the CAIR SO_2 emissions limitation for the control period, as follows:

(i) Until the tonnage equivalent of the CAIR SO_2 allowances deducted equals, or exceeds in accordance with paragraphs (c)(1) and (2) of this section, the number of tons of total sulfur dioxide emissions, determined in accordance with subpart HHH of this part, from all CAIR SO_2 units at the source for the control period; or

(ii) If there are insufficient CAIR SO_2 allowances to complete the deductions in paragraph (b)(2)(i) of this section, until no more CAIR SO_2 allowances available under paragraph (a) of this section (including any issued by a permitting authority under § 96.288) remain in the compliance account.

(c)(1) *Identification of CAIR SO_2 allowances by serial number*. The CAIR authorized account representative for a source's compliance account may request that specific CAIR SO_2 allowances, identified by serial number, in the compliance account be deducted for emissions or excess emissions for a control period in accordance with paragraph (b) or (d) of this section. Such request shall be submitted to the Administrator by the allowance transfer deadline for the control period and include, in a format prescribed by the Administrator, the identification of the CAIR SO_2 source and the appropriate serial numbers.

(2) *First-in, first-out*. The Administrator will deduct CAIR SO_2 allowances under paragraph (b) or (d) of this section from the source's compliance account, in the absence of an identification or in the case of a partial identification of CAIR SO_2 allowances by serial number under paragraph (c)(1) of this section, on a first-in, first-out (FIFO) accounting basis in the following order:

(i) Any CAIR SO_2 allowances that were allocated to the units at the source for a control period before 2010, in the order of recordation;

(ii) Any CAIR SO_2 allowances that were allocated to any entity for a control period before 2010 and transferred and recorded in the compliance account pursuant to subpart GGG of this part or subpart D of part 73 of this chapter, in the order of recordation;

(iii) Any CAIR SO_2 allowances that were allocated to the units at the source for a control period during 2010 through 2014, in the order of recordation;

(iv) Any CAIR SO_2 allowances that were allocated to any entity for a control period during 2010 through 2014 and transferred and recorded in the compliance account pursuant to subpart GGG of this part or subpart D of part 73 of this chapter, in the order of recordation;

(v) Any CAIR SO_2 allowances that were allocated to the units at the source for a control period in 2015 or later, in the order of recordation; and

(vi) Any CAIR SO_2 allowances that were allocated to any entity for a control period in 2015 or later and transferred and recorded in the compliance account pursuant to subpart GGG of this part or subpart D of part 73 of this chapter, in the order of recordation.

(d) *Deductions for excess emissions.* (1) After making the deductions for compliance under paragraph (b) of this section for a control period in a calendar year in which the CAIR SO_2 source has excess emissions, the Administrator will deduct from the source's compliance account the tonnage equivalent in CAIR SO_2 allowances, allocated for the control period in the immediately following calendar year (including any issued by a permitting authority under § 96.288), equal to, or exceeding in accordance with paragraphs (c)(1) and (2) of this section, 3 times the following amount: the number of tons of the source's excess emissions minus, if the source is subject to an Acid Rain emissions limitation, the amount of the CAIR SO_2 allowances required to be deducted under paragraph (b)(1)(ii) of this section.

(2) Any allowance deduction required under paragraph (d)(1) of this section shall not affect the liability of the owners and operators of the CAIR SO_2 source or the CAIR SO_2 units at the source for any fine, penalty, or assessment, or their obligation to comply with any other remedy, for the same violations, as ordered under the Clean Air Act or applicable State law.

(e) *Recordation of deductions.* The Administrator will record in the appropriate compliance account all deductions from such an account under paragraphs (b) and (d) of this section and subpart III.

(f) *Administrator's action on submissions.* (1) The Administrator may review and conduct independent audits concerning any submission under the CAIR SO_2 Trading Program and make appropriate adjustments of the information in the submissions.

(2) The Administrator may deduct CAIR SO_2 allowances from or transfer CAIR SO_2 allowances to a source's compliance account based on the information in the submissions, as adjusted under paragraph (f)(1) of this section, and record such deductions and transfers.

[70 FR 25362, May 12, 2005, as amended at 71 FR 25389, Apr. 28, 2006; 71 FR 74794, Dec. 13, 2006]

§ 96.255 Banking.

(a) CAIR SO_2 allowances may be banked for future use or transfer in a compliance account or a general account in accordance with paragraph (b) of this section.

(b) Any CAIR SO_2 allowance that is held in a compliance account or a general account will remain in such account unless and until the CAIR SO_2 allowance is deducted or transferred under § 96.254, § 96.256, or subpart GGG or III of this part.

[70 FR 25362, May 12, 2005, as amended at 71 FR 25389, Apr. 28, 2006]

§ 96.256 Account error.

The Administrator may, at his or her sole discretion and on his or her own motion, correct any error in any CAIR SO_2 Allowance Tracking System account. Within 10 business days of making such correction, the Administrator will notify the CAIR authorized account representative for the account.

§ 96.257 Closing of general accounts.

(a) The CAIR authorized account representative of a general account may submit to the Administrator a request to close the account, which shall include a correctly submitted allowance transfer under §§ 96.260 and 96.261 for any CAIR SO_2 allowances in the account to one or more other CAIR SO_2 Allowance Tracking System accounts.

(b) If a general account has no allowance transfers in or out of the account for a 12-month period or longer and does not contain any CAIR SO_2 allowances, the Administrator may notify the CAIR authorized account representative for the account that the account will be closed following 20 business days after the notice is sent. The account will be closed after the 20-day period unless, before the end of the 20-day period, the Administrator receives a correctly submitted transfer of CAIR SO_2 allowances into the account under §§ 96.260 and 96.261 or a statement submitted by the CAIR authorized account

representative demonstrating to the satisfaction of the Administrator good cause as to why the account should not be closed.

[70 FR 25362, May 12, 2005, as amended at 71 FR 25389, Apr. 28, 2006]

Subpart GGG—CAIR SO_2 Allowance Transfers

SOURCE: 70 FR 25362, May 12, 2005, unless otherwise noted.

§ 96.260 Submission of CAIR SO_2 allowance transfers.

(a) A CAIR authorized account representative seeking recordation of a CAIR SO_2 allowance transfer shall submit the transfer to the Administrator. To be considered correctly submitted, the CAIR SO_2 allowance transfer shall include the following elements, in a format specified by the Administrator:

(1) The account numbers of both the transferor and transferee accounts;

(2) The serial number of each CAIR SO_2 allowance that is in the transferor account and is to be transferred; and

(3) The name and signature of the CAIR authorized account representatives of the transferor and transferee accounts and the dates signed.

(b)(1) The CAIR authorized account representative for the transferee account can meet the requirements in paragraph (a)(3) of this section by submitting, in a format prescribed by the Administrator, a statement signed by the CAIR authorized account representative and identifying each account into which any transfer of allowances, submitted on or after the date on which the Administrator receives such statement, is authorized. Such authorization shall be binding on any CAIR authorized account representative for such account and shall apply to all transfers into the account that are submitted on or after such date of receipt, unless and until the Administrator receives a statement signed by the CAIR authorized account representative retracting the authorization for the account.

(2) The statement under paragraph (b)(1) of this section shall include the following: ''By this signature I authorize any transfer of allowances into each account listed herein, except that I do not waive any remedies under State or Federal law to obtain correction of any erroneous transfers into such accounts. This authorization shall be binding on any CAIR authorized account representative for such account unless and until a statement signed by the CAIR authorized account representative retracting this authorization for the account is received by the Administrator.''

§ 96.261 EPA recordation.

(a) Within 5 business days (except as necessary to perform a transfer in perpetuity of CAIR SO_2 allowances allocated to a CAIR SO_2 unit or as provided in paragraph (b) of this section) of receiving a CAIR SO_2 allowance transfer, the Administrator will record a CAIR SO_2 allowance transfer by moving each CAIR SO_2 allowance from the transferor account to the transferee account as specified by the request, provided that:

(1) The transfer is correctly submitted under § 96.260;

(2) The transferor account includes each CAIR SO_2 allowance identified by serial number in the transfer; and

(3) The transfer is in accordance with the limitation on transfer under § 74.42 of this chapter and § 74.47(c) of this chapter, as applicable.

(b) A CAIR SO_2 allowance transfer that is submitted for recordation after the allowance transfer deadline for a control period and that includes any CAIR SO_2 allowances allocated for any control period before such allowance transfer deadline will not be recorded until after the Administrator completes the deductions under § 96.254 for the control period immediately before such allowance transfer deadline.

(c) Where a CAIR SO_2 allowance transfer submitted for recordation fails to meet the requirements of paragraph (a) of this section, the Administrator will not record such transfer.

[70 FR 25362, May 12, 2005, as amended at 71 FR 25389, Apr. 28, 2006]

§ 96.262 Notification.

(a) *Notification of recordation*. Within 5 business days of recordation of a CAIR SO_2 allowance transfer under § 96.261, the Administrator will notify

the CAIR authorized account representatives of both the transferor and transferee accounts.

(b) *Notification of non-recordation.* Within 10 business days of receipt of a CAIR SO_2 allowance transfer that fails to meet the requirements of § 96.261(a), the Administrator will notify the CAIR authorized account representatives of both accounts subject to the transfer of:

(1) A decision not to record the transfer, and

(2) The reasons for such non-recordation.

(c) Nothing in this section shall preclude the submission of a CAIR SO_2 allowance transfer for recordation following notification of non-recordation.

Subpart HHH—Monitoring and Reporting

SOURCE: 70 FR 25362, May 12, 2005, unless otherwise noted.

§ 96.270 General requirements.

The owners and operators, and to the extent applicable, the CAIR designated representative, of a CAIR SO_2 unit, shall comply with the monitoring, recordkeeping, and reporting requirements as provided in this subpart and in subparts F and G of part 75 of this chapter. For purposes of complying with such requirements, the definitions in § 96.202 and in § 72.2 of this chapter shall apply, and the terms ''affected unit,'' ''designated representative,'' and ''continuous emission monitoring system'' (or ''CEMS'') in part 75 of this chapter shall be deemed to refer to the terms ''CAIR SO_2 unit,'' ''CAIR designated representative,'' and ''continuous emission monitoring system'' (or ''CEMS'') respectively, as defined in § 96.202. The owner or operator of a unit that is not a CAIR SO_2 unit but that is monitored under § 75.16(b)(2) of this chapter shall comply with the same monitoring, recordkeeping, and reporting requirements as a CAIR SO_2 unit.

(a) *Requirements for installation, certification, and data accounting.* The owner or operator of each CAIR SO_2 unit shall:

(1) Install all monitoring systems required under this subpart for monitoring SO_2 mass emissions and individual unit heat input (including all systems required to monitor SO_2 concentration, stack gas moisture content, stack gas flow rate, CO_2 or O_2 concentration, and fuel flow rate, as applicable, in accordance with §§ 75.11 and 75.16 of this chapter);

(2) Successfully complete all certification tests required under § 96.271 and meet all other requirements of this subpart and part 75 of this chapter applicable to the monitoring systems under paragraph (a)(1) of this section; and

(3) Record, report, and quality-assure the data from the monitoring systems under paragraph (a)(1) of this section.

(b) *Compliance deadlines.* Except as provided in paragraph (e) of this section, the owner or operator shall meet the monitoring system certification and other requirements of paragraphs (a)(1) and (2) of this section on or before the following dates. The owner or operator shall record, report, and quality-assure the data from the monitoring systems under paragraph (a)(1) of this section on and after the following dates.

(1) For the owner or operator of a CAIR SO_2 unit that commences commercial operation before July 1, 2008, by January 1, 2009.

(2) For the owner or operator of a CAIR SO_2 unit that commences commercial operation on or after July 1, 2008, by the later of the following dates:

(i) January 1, 2009; or

(ii) 90 unit operating days or 180 calendar days, whichever occurs first, after the date on which the unit commences commercial operation.

(3) For the owner or operator of a CAIR SO_2 unit for which construction of a new stack or flue or installation of add-on SO_2 emission controls is completed after the applicable deadline under paragraph (b)(1), (2), (4), or (5) of this section, by 90 unit operating days or 180 calendar days, whichever occurs first, after the date on which emissions first exit to the atmosphere through the new stack or flue or add-on SO_2 emissions controls.

(4) Notwithstanding the dates in paragraphs (b)(1) and (2) of this section, for the owner or operator of a unit for which a CAIR opt-in permit application

is submitted and not withdrawn and a CAIR opt-in permit is not yet issued or denied under subpart III of this part, by the date specified in § 96.284(b).

(5) Notwithstanding the dates in paragraphs (b)(1) and (2) of this section, for the owner or operator of a CAIR SO_2 opt-in unit under subpart III of this part, by the date on which the CAIR SO_2 opt-in unit enters the CAIR SO_2 Trading Program as provided in § 96.284(g).

(c) *Reporting data.* The owner or operator of a CAIR SO_2 unit that does not meet the applicable compliance date set forth in paragraph (b) of this section for any monitoring system under paragraph (a)(1) of this section shall, for each such monitoring system, determine, record, and report maximum potential (or, as appropriate, minimum potential) values for SO_2 concentration, stack gas flow rate, stack gas moisture content, fuel flow rate, and any other parameters required to determine SO_2 mass emissions and heat input in accordance with § 75.31(b)(2) or (c)(3) of this chapter or section 2.4 of appendix D to part 75 of this chapter, as applicable.

(d) *Prohibitions.* (1) No owner or operator of a CAIR SO_2 unit shall use any alternative monitoring system, alternative reference method, or any other alternative to any requirement of this subpart without having obtained prior written approval in accordance with § 96.275.

(2) No owner or operator of a CAIR SO_2 unit shall operate the unit so as to discharge, or allow to be discharged, SO_2 emissions to the atmosphere without accounting for all such emissions in accordance with the applicable provisions of this subpart and part 75 of this chapter.

(3) No owner or operator of a CAIR SO_2 unit shall disrupt the continuous emission monitoring system, any portion thereof, or any other approved emission monitoring method, and thereby avoid monitoring and recording SO_2 mass emissions discharged into the atmosphere or heat input, except for periods of recertification or periods when calibration, quality assurance testing, or maintenance is performed in accordance with the applicable provisions of this subpart and part 75 of this chapter.

(4) No owner or operator of a CAIR SO_2 unit shall retire or permanently discontinue use of the continuous emission monitoring system, any component thereof, or any other approved monitoring system under this subpart, except under any one of the following circumstances:

(i) During the period that the unit is covered by an exemption under § 96.205 that is in effect;

(ii) The owner or operator is monitoring emissions from the unit with another certified monitoring system approved, in accordance with the applicable provisions of this subpart and part 75 of this chapter, by the permitting authority for use at that unit that provides emission data for the same pollutant or parameter as the retired or discontinued monitoring system; or

(iii) The CAIR designated representative submits notification of the date of certification testing of a replacement monitoring system for the retired or discontinued monitoring system in accordance with § 96.271(d)(3)(i).

(e) *Long-term cold storage.* The owner or operator of a CAIR SO_2 unit is subject to the applicable provisions of part 75 of this chapter concerning units in long-term cold storage.

[70 FR 25362, May 12, 2005, as amended at 71 FR 25389, Apr. 28, 2006]

§ 96.271 Initial certification and recertification procedures.

(a) The owner or operator of a CAIR SO_2 unit shall be exempt from the initial certification requirements of this section for a monitoring system under § 96.270(a)(1) if the following conditions are met:

(1) The monitoring system has been previously certified in accordance with part 75 of this chapter; and

(2) The applicable quality-assurance and quality-control requirements of § 75.21 of this chapter and appendix B and appendix D to part 75 of this chapter are fully met for the certified monitoring system described in paragraph (a)(1) of this section.

(b) The recertification provisions of this section shall apply to a monitoring system under §96.270(a)(1) exempt from initial certification requirements under paragraph (a) of this section.

(c) [Reserved]

(d) Except as provided in paragraph (a) of this section, the owner or operator of a CAIR SO_2 unit shall comply with the following initial certification and recertification procedures, for a continuous monitoring system (*i.e.*, a continuous emission monitoring system and an excepted monitoring system under appendix D to part 75 of this chapter) under §96.270(a)(1). The owner or operator of a unit that qualifies to use the low mass emissions excepted monitoring methodology under §75.19 of this chapter or that qualifies to use an alternative monitoring system under subpart E of part 75 of this chapter shall comply with the procedures in paragraph (e) or (f) of this section respectively.

(1) *Requirements for initial certification.* The owner or operator shall ensure that each continuous monitoring system under §96.270(a)(1) (including the automated data acquisition and handling system) successfully completes all of the initial certification testing required under §75.20 of this chapter by the applicable deadline in §96.270(b). In addition, whenever the owner or operator installs a monitoring system to meet the requirements of this subpart in a location where no such monitoring system was previously installed, initial certification in accordance with §75.20 of this chapter is required.

(2) *Requirements for recertification.* Whenever the owner or operator makes a replacement, modification, or change in any certified continuous emission monitoring system under §96.270(a)(1) that may significantly affect the ability of the system to accurately measure or record SO_2 mass emissions or heat input rate or to meet the quality-assurance and quality-control requirements of §75.21 of this chapter or appendix B to part 75 of this chapter, the owner or operator shall recertify the monitoring system in accordance with §75.20(b) of this chapter. Furthermore, whenever the owner or operator makes a replacement, modification, or change to the flue gas handling system or the unit's operation that may significantly change the stack flow or concentration profile, the owner or operator shall recertify each continuous emission monitoring system whose accuracy is potentially affected by the change, in accordance with §75.20(b) of this chapter. Examples of changes to a continuous emission monitoring system that require recertification include: replacement of the analyzer, complete replacement of an existing continuous emission monitoring system, or change in location or orientation of the sampling probe or site. Any fuel flowmeter system under §96.270(a)(1) is subject to the recertification requirements in §75.20(g)(6) of this chapter.

(3) *Approval process for initial certification and recertification.* Paragraphs (d)(3)(i) through (iv) of this section apply to both initial certification and recertification of a continuous monitoring system under §96.270(a)(1). For recertifications, replace the words ''certification'' and ''initial certification'' with the word ''recertification'', replace the word ''certified'' with the word ''recertified,'' and follow the procedures in §§75.20(b)(5) and (g)(7) of this chapter in lieu of the procedures in paragraph (d)(3)(v) of this section.

(i) *Notification of certification.* The CAIR designated representative shall submit to the permitting authority, the appropriate EPA Regional Office, and the Administrator written notice of the dates of certification testing, in accordance with §96.273.

(ii) *Certification application.* The CAIR designated representative shall submit to the permitting authority a certification application for each monitoring system. A complete certification application shall include the information specified in §75.63 of this chapter.

(iii) *Provisional certification date.* The provisional certification date for a monitoring system shall be determined in accordance with §75.20(a)(3) of this chapter. A provisionally certified monitoring system may be used under the CAIR SO_2 Trading Program for a period not to exceed 120 days after receipt by the permitting authority of the complete certification application for the monitoring system under paragraph (d)(3)(ii) of this section. Data measured

and recorded by the provisionally certified monitoring system, in accordance with the requirements of part 75 of this chapter, will be considered valid quality-assured data (retroactive to the date and time of provisional certification), provided that the permitting authority does not invalidate the provisional certification by issuing a notice of disapproval within 120 days of the date of receipt of the complete certification application by the permitting authority.

(iv) *Certification application approval process.* The permitting authority will issue a written notice of approval or disapproval of the certification application to the owner or operator within 120 days of receipt of the complete certification application under paragraph (d)(3)(ii) of this section. In the event the permitting authority does not issue such a notice within such 120-day period, each monitoring system that meets the applicable performance requirements of part 75 of this chapter and is included in the certification application will be deemed certified for use under the CAIR SO_2 Trading Program.

(A) *Approval notice.* If the certification application is complete and shows that each monitoring system meets the applicable performance requirements of part 75 of this chapter, then the permitting authority will issue a written notice of approval of the certification application within 120 days of receipt.

(B) *Incomplete application notice.* If the certification application is not complete, then the permitting authority will issue a written notice of incompleteness that sets a reasonable date by which the CAIR designated representative must submit the additional information required to complete the certification application. If the CAIR designated representative does not comply with the notice of incompleteness by the specified date, then the permitting authority may issue a notice of disapproval under paragraph (d)(3)(iv)(C) of this section. The 120-day review period shall not begin before receipt of a complete certification application.

(C) *Disapproval notice.* If the certification application shows that any monitoring system does not meet the performance requirements of part 75 of this chapter or if the certification application is incomplete and the requirement for disapproval under paragraph (d)(3)(iv)(B) of this section is met, then the permitting authority will issue a written notice of disapproval of the certification application. Upon issuance of such notice of disapproval, the provisional certification is invalidated by the permitting authority and the data measured and recorded by each uncertified monitoring system shall not be considered valid quality-assured data beginning with the date and hour of provisional certification (as defined under § 75.20(a)(3) of this chapter). The owner or operator shall follow the procedures for loss of certification in paragraph (d)(3)(v) of this section for each monitoring system that is disapproved for initial certification.

(D) *Audit decertification.* The permitting authority or, for a CAIR SO_2 opt-in unit or a unit for which a CAIR opt-in permit application is submitted and not withdrawn and a CAIR opt-in permit is not yet issued or denied under subpart III of this part, the Administrator may issue a notice of disapproval of the certification status of a monitor in accordance with § 96.272(b).

(v) *Procedures for loss of certification.* If the permitting authority or the Administrator issues a notice of disapproval of a certification application under paragraph (d)(3)(iv)(C) of this section or a notice of disapproval of certification status under paragraph (d)(3)(iv)(D) of this section, then:

(A) The owner or operator shall substitute the following values, for each disapproved monitoring system, for each hour of unit operation during the period of invalid data specified under § 75.20(a)(4)(iii), § 75.20(g)(7), or § 75.21(e) of this chapter and continuing until the applicable date and hour specified under § 75.20(a)(5)(i) or (g)(7) of this chapter:

(*1*) For a disapproved SO_2 pollutant concentration monitor and disapproved flow monitor, respectively, the maximum potential concentration of SO_2 and the maximum potential flow rate, as defined in sections 2.1.1.1 and 2.1.4.1 of appendix A to part 75 of this chapter.

(*2*) For a disapproved moisture monitoring system and disapproved diluent gas monitoring system, respectively, the minimum potential moisture percentage and either the maximum potential CO_2 concentration or the minimum potential O_2 concentration (as applicable), as defined in sections 2.1.5, 2.1.3.1, and 2.1.3.2 of appendix A to part 75 of this chapter.

(*3*) For a disapproved fuel flowmeter system, the maximum potential fuel flow rate, as defined in section 2.4.2.1 of appendix D to part 75 of this chapter.

(B) The CAIR designated representative shall submit a notification of certification retest dates and a new certification application in accordance with paragraphs (d)(3)(i) and (ii) of this section.

(C) The owner or operator shall repeat all certification tests or other requirements that were failed by the monitoring system, as indicated in the permitting authority's or the Administrator's notice of disapproval, no later than 30 unit operating days after the date of issuance of the notice of disapproval.

(e) *Initial certification and recertification procedures for units using the low mass emission excepted methodology under § 75.19 of this chapter*. The owner or operator of a unit qualified to use the low mass emissions (LME) excepted methodology under § 75.19 of this chapter shall meet the applicable certification and recertification requirements in §§ 75.19(a)(2) and 75.20(h) of this chapter. If the owner or operator of such a unit elects to certify a fuel flowmeter system for heat input determination, the owner or operator shall also meet the certification and recertification requirements in § 75.20(g) of this chapter.

(f) *Certification/recertification procedures for alternative monitoring systems*. The CAIR designated representative of each unit for which the owner or operator intends to use an alternative monitoring system approved by the Administrator and, if applicable, the permitting authority under subpart E of part 75 of this chapter shall comply with the applicable notification and application procedures of § 75.20(f) of this chapter.

[70 FR 25362, May 12, 2005, as amended at 71 FR 25390, Apr. 28, 2006; 71 FR 74794, Dec. 13, 2006]

§ 96.272 Out of control periods.

(a) Whenever any monitoring system fails to meet the quality-assurance and quality-control requirements or data validation requirements of part 75 of this chapter, data shall be substituted using the applicable missing data procedures in subpart D of or appendix D to part 75 of this chapter.

(b) *Audit decertification*. Whenever both an audit of a monitoring system and a review of the initial certification or recertification application reveal that any monitoring system should not have been certified or recertified because it did not meet a particular performance specification or other requirement under § 96.271 or the applicable provisions of part 75 of this chapter, both at the time of the initial certification or recertification application submission and at the time of the audit, the permitting authority or, for a CAIR SO_2 opt-in unit or a unit for which a CAIR opt-in permit application is submitted and not withdrawn and a CAIR opt-in permit is not yet issued or denied under subpart III of this part, the Administrator will issue a notice of disapproval of the certification status of such monitoring system. For the purposes of this paragraph, an audit shall be either a field audit or an audit of any information submitted to the permitting authority or the Administrator. By issuing the notice of disapproval, the permitting authority or the Administrator revokes prospectively the certification status of the monitoring system. The data measured and recorded by the monitoring system shall not be considered valid quality-assured data from the date of issuance of the notification of the revoked certification status until the date and time that the owner or operator completes subsequently approved initial certification or recertification tests for the monitoring system. The owner or operator shall follow the applicable initial certification or recertification procedures in § 96.271 for each disapproved monitoring system.

§ 96.273 Notifications.

The CAIR designated representative for a CAIR SO_2 unit shall submit written notice to the permitting authority and the Administrator in accordance with § 75.61 of this chapter.

[70 FR 25362, May 12, 2005, as amended at 71 FR 25390, Apr. 28, 2006]

§ 96.274 Recordkeeping and reporting.

(a) *General provisions*. The CAIR designated representative shall comply with all recordkeeping and reporting requirements in this section, the applicable recordkeeping and reporting requirements in subparts F and G of part 75 of this chapter, and the requirements of § 96.210(e)(1).

(b) *Monitoring plans*. The owner or operator of a CAIR SO_2 unit shall comply with requirements of § 75.62 of this chapter and, for a unit for which a CAIR opt-in permit application is submitted and not withdrawn and a CAIR opt-in permit is not yet issued or denied under subpart III of this part, §§ 96.283 and 96.284(a).

(c) *Certification applications*. The CAIR designated representative shall submit an application to the permitting authority within 45 days after completing all initial certification or recertification tests required under § 96.271, including the information required under § 75.63 of this chapter.

(d) *Quarterly reports*. The CAIR designated representative shall submit quarterly reports, as follows:

(1) The CAIR designated representative shall report the SO_2 mass emissions data and heat input data for the CAIR SO_2 unit, in an electronic quarterly report in a format prescribed by the Administrator, for each calendar quarter beginning with:

(i) For a unit that commences commercial operation before July 1, 2008, the calendar quarter covering January 1, 2009 through March 31, 2009;

(ii) For a unit that commences commercial operation on or after July 1, 2008, the calendar quarter corresponding to the earlier of the date of provisional certification or the applicable deadline for initial certification under § 96.270(b), unless that quarter is the third or fourth quarter of 2008, in which case reporting shall commence in the quarter covering January 1, 2009 through March 31, 2009;

(iii) Notwithstanding paragraphs (d)(1)(i) and (ii) of this section, for a unit for which a CAIR opt-in permit application is submitted and not withdrawn and a CAIR opt-in permit is not yet issued or denied under subpart III of this part, the calendar quarter corresponding to the date specified in § 96.284(b); and

(iv) Notwithstanding paragraphs (d)(1)(i) and (ii) of this section, for a CAIR SO_2 opt-in unit under subpart III of this part, the calendar quarter corresponding to the date on which the CAIR SO_2 opt-in unit enters the CAIR SO_2 Trading Program as provided in § 96.284(g).

(2) The CAIR designated representative shall submit each quarterly report to the Administrator within 30 days following the end of the calendar quarter covered by the report. Quarterly reports shall be submitted in the manner specified in § 75.64 of this chapter.

(3) For CAIR SO_2 units that are also subject to an Acid Rain emissions limitation or the CAIR NO_X Annual Trading Program CAIR NO_X Ozone Season Trading Program, or Hg Budget Trading Porgram, quarterly reports shall include the applicable data and information required by subparts F through I of part 75 of this chapter as applicable, in addition to the SO_2 mass emission data, heat input data, and other information required by this subpart.

(e) *Compliance certification*. The CAIR designated representative shall submit to the Administrator a compliance certification (in a format prescribed by the Administrator) in support of each quarterly report based on reasonable inquiry of those persons with primary responsibility for ensuring that all of the unit's emissions are correctly and fully monitored. The certification shall state that:

(1) The monitoring data submitted were recorded in accordance with the applicable requirements of this subpart and part 75 of this chapter, including the quality assurance procedures and specifications; and

(2) For a unit with add-on SO_2 emission controls and for all hours where SO_2 data are substituted in accordance with § 75.34(a)(1) of this chapter, the

add-on emission controls were operating within the range of parameters listed in the quality assurance/quality control program under appendix B to part 75 of this chapter and the substitute data values do not systematically underestimate SO_2 emissions.

[70 FR 25362, May 12, 2005, as amended at 71 FR 25390, Apr. 28, 2006]

§ 96.275 Petitions.

(a) The CAIR designated representative of a CAIR SO_2 unit that is subject to an Acid Rain emissions limitation may submit a petition under § 75.66 of this chapter to the Administrator requesting approval to apply an alternative to any requirement of this subpart. Application of an alternative to any requirement of this subpart is in accordance with this subpart only to the extent that the petition is approved in writing by the Administrator, in consultation with the permitting authority.

(b) The CAIR designated representative of a CAIR SO_2 unit that is not subject to an Acid Rain emissions limitation may submit a petition under § 75.66 of this chapter to the permitting authority and the Administrator requesting approval to apply an alternative to any requirement of this subpart. Application of an alternative to any requirement of this subpart is in accordance with this subpart only to the extent that the petition is approved in writing by both the permitting authority and the Administrator.

Subpart III—CAIR SO_2 Opt-in Units

SOURCE: 70 FR 25362, May 12, 2005, unless otherwise noted.

§ 96.280 Applicability.

A CAIR SO_2 opt-in unit must be a unit that:

(a) Is located in the State;

(b) Is not a CAIR SO_2 unit under § 96.204 and is not covered by a retired unit exemption under § 96.205 that is in effect;

(c) Is not covered by a retired unit exemption under § 72.8 of this chapter that is in effect and is not an opt-in source under part 74 of this chapter;

(d) Has or is required or qualified to have a title V operating permit or other federally enforceable permit; and

(e) Vents all of its emissions to a stack and can meet the monitoring, recordkeeping, and reporting requirements of subpart HHH of this part.

§ 96.281 General.

(a) Except as otherwise provided in §§ 96.201 through 96.204, §§ 96.206 through 96.208, and subparts BBB and CCC and subparts FFF through HHH of this part, a CAIR SO_2 opt-in unit shall be treated as a CAIR SO_2 unit for purposes of applying such sections and subparts of this part.

(b) Solely for purposes of applying, as provided in this subpart, the requirements of subpart HHH of this part to a unit for which a CAIR opt-in permit application is submitted and not withdrawn and a CAIR opt-in permit is not yet issued or denied under this subpart, such unit shall be treated as a CAIR SO_2 unit before issuance of a CAIR opt-in permit for such unit.

§ 96.282 CAIR designated representative.

Any CAIR SO_2 opt-in unit, and any unit for which a CAIR opt-in permit application is submitted and not withdrawn and a CAIR opt-in permit is not yet issued or denied under this subpart, located at the same source as one or more CAIR SO_2 units shall have the same CAIR designated representative and alternate CAIR designated representative as such CAIR SO_2 units.

§ 96.283 Applying for CAIR opt-in permit.

(a) *Applying for initial CAIR opt-in permit.* The CAIR designated representative of a unit meeting the requirements for a CAIR SO_2 opt-in unit in § 96.280 may apply for an initial CAIR opt-in permit at any time, except as provided under § 96.286(f) and (g), and, in order to apply, must submit the following:

(1) A complete CAIR permit application under § 96.222;

(2) A certification, in a format specified by the permitting authority, that the unit:

(i) Is not a CAIR SO_2 unit under § 96.204 and is not covered by a retired

unit exemption under § 96.205 that is in effect;

(ii) Is not covered by a retired unit exemption under § 72.8 of this chapter that is in effect;

(iii) Is not and, so long as the unit is a CAIR SO_2 opt-in unit, will not become, an opt-in source under part 74 of this chapter;

(iv) Vents all of its emissions to a stack; and

(v) Has documented heat input for more than 876 hours during the 6 months immediately preceding submission of the CAIR permit application under § 96.222;

(3) A monitoring plan in accordance with subpart HHH of this part;

(4) A complete certificate of representation under § 96.213 consistent with § 96.282, if no CAIR designated representative has been previously designated for the source that includes the unit; and

(5) A statement, in a format specified by the permitting authority, whether the CAIR designated representative requests that the unit be allocated CAIR SO_2 allowances under § 96.288(b) or § 96.288(c) (subject to the conditions in §§ 96.284(h) and 96.286(g)). If allocation under § 96.288(c) is requested, this statement shall include a statement that the owners and operators of the unit intend to repower the unit before January 1, 2015 and that they will provide, upon request, documentation demonstrating such intent.

(b) *Duty to reapply.* (1) The CAIR designated representative of a CAIR SO_2 opt-in unit shall submit a complete CAIR permit application under § 96.222 to renew the CAIR opt-in unit permit in accordance with the permitting authority's regulations for title V operating permits, or the permitting authority's regulations for other federally enforceable permits if applicable, addressing permit renewal.

(2) Unless the permitting authority issues a notification of acceptance of withdrawal of the CAIR SO_2 opt-in unit from the CAIR SO_2 Trading Program in accordance with § 96.286 or the unit becomes a CAIR SO_2 unit under § 96.204, the CAIR SO_2 opt-in unit shall remain subject to the requirements for a CAIR SO_2 opt-in unit, even if the CAIR designated representative for the CAIR SO_2 opt-in unit fails to submit a CAIR permit application that is required for renewal of the CAIR opt-in permit under paragraph (b)(1) of this section.

[70 FR 25362, May 12, 2005, as amended at 71 FR 25390, Apr. 28, 2006]

§ 96.284 Opt-in process.

The permitting authority will issue or deny a CAIR opt-in permit for a unit for which an initial application for a CAIR opt-in permit under § 96.283 is submitted in accordance with the following:

(a) *Interim review of monitoring plan.* The permitting authority and the Administrator will determine, on an interim basis, the sufficiency of the monitoring plan accompanying the initial application for a CAIR opt-in permit under § 96.283. A monitoring plan is sufficient, for purposes of interim review, if the plan appears to contain information demonstrating that the SO_2 emissions rate and heat input of the unit and all other applicable parameters are monitored and reported in accordance with subpart HHH of this part. A determination of sufficiency shall not be construed as acceptance or approval of the monitoring plan.

(b) *Monitoring and reporting.* (1)(i) If the permitting authority and the Administrator determine that the monitoring plan is sufficient under paragraph (a) of this section, the owner or operator shall monitor and report the SO_2 emissions rate and the heat input of the unit and all other applicable parameters, in accordance with subpart HHH of this part, starting on the date of certification of the appropriate monitoring systems under subpart HHH of this part and continuing until a CAIR opt-in permit is denied under § 96.284(f) or, if a CAIR opt-in permit is issued, the date and time when the unit is withdrawn from the CAIR SO_2 Trading Program in accordance with § 96.286.

(ii) The monitoring and reporting under paragraph (b)(1)(i) of this section shall include the entire control period immediately before the date on which the unit enters the CAIR SO_2 Trading Program under § 96.284(g), during which period monitoring system availability must not be less than 90 percent under subpart HHH of this part and the unit must be in full compliance with any

applicable State or Federal emissions or emissions-related requirements.

(2) To the extent the SO_2 emissions rate and the heat input of the unit are monitored and reported in accordance with subpart HHH of this part for one or more control periods, in addition to the control period under paragraph (b)(1)(ii) of this section, during which control periods monitoring system availability is not less than 90 percent under subpart HHH of this part and the unit is in full compliance with any applicable State or Federal emissions or emissions-related requirements and which control periods begin not more than 3 years before the unit enters the CAIR SO_2 Trading Program under § 96.284(g), such information shall be used as provided in paragraphs (c) and (d) of this section.

(c) *Baseline heat input*. The unit's baseline heat input shall equal:

(1) If the unit's SO_2 emissions rate and heat input are monitored and reported for only one control period, in accordance with paragraph (b)(1) of this section, the unit's total heat input (in mmBtu) for the control period; or

(2) If the unit's SO_2 emissions rate and heat input are monitored and reported for more than one control period, in accordance with paragraphs (b)(1) and (2) of this section, the average of the amounts of the unit's total heat input (in mmBtu) for the control periods under paragraphs (b)(1)(ii) and (2) of this section and the control periods under paragraph (b)(2) of this section.

(d) *Baseline SO_2* emission rate. The unit's baseline SO_2 emission rate shall equal:

(1) If the unit's SO_2 emissions rate and heat input are monitored and reported for only one control period, in accordance with paragraph (b)(1) of this section, the unit's SO_2 emissions rate (in lb/mmBtu) for the control period;

(2) If the unit's SO_2 emissions rate and heat input are monitored and reported for more than one control period, in accordance with paragraphs (b)(1) and (2) of this section, and the unit does not have add-on SO_2 emission controls during any such control periods, the average of the amounts of the unit's SO_2 emissions rate (in lb/mmBtu) for the control periods under paragraphs (b)(1)(ii) and (2) of this section; or

(3) If the unit's SO_2 emissions rate and heat input are monitored and reported for more than one control period, in accordance with paragraphs (b)(1) and (2) of this section, and the unit has add-on SO_2 emission controls during any such control periods, the average of the amounts of the unit's SO_2 emissions rate (in lb/mmBtu) for such control periods during which the unit has add-on SO_2 emission controls.

(e) *Issuance of CAIR opt-in permit*. After calculating the baseline heat input and the baseline SO_2 emissions rate for the unit under paragraphs (c) and (d) of this section and if the permitting authority determines that the CAIR designated representative shows that the unit meets the requirements for a CAIR SO_2 opt-in unit in § 96.280 and meets the elements certified in § 96.283(a)(2), the permitting authority will issue a CAIR opt-in permit. The permitting authority will provide a copy of the CAIR opt-in permit to the Administrator, who will then establish a compliance account for the source that includes the CAIR SO_2 opt-in unit unless the source already has a compliance account.

(f) *Issuance of denial of CAIR opt-in permit*. Notwithstanding paragraphs (a) through (e) of this section, if at any time before issuance of a CAIR opt-in permit for the unit, the permitting authority determines that the CAIR designated representative fails to show that the unit meets the requirements for a CAIR SO_2 opt-in unit in § 96.280 or meets the elements certified in § 96.283(a)(2), the permitting authority will issue a denial of a CAIR opt-in permit for the unit.

(g) *Date of entry into CAIR SO_2 Trading Program*. A unit for which an initial CAIR opt-in permit is issued by the permitting authority shall become a CAIR SO_2 opt-in unit, and a CAIR SO_2 unit, as of the later of January 1, 2010 or January 1 of the first control period during which such CAIR opt-in permit is issued.

(h) *Repowered CAIR SO_2 opt-in unit*. (1) If CAIR designated representative requests, and the permitting authority issues a CAIR opt-in permit providing

for, allocation to a CAIR SO_2 opt-in unit of CAIR SO_2 allowances under § 96.288(c) and such unit is repowered after its date of entry into the CAIR SO_2 Trading Program under paragraph (g) of this section, the repowered unit shall be treated as a CAIR SO_2 opt-in unit replacing the original CAIR SO_2 opt-in unit, as of the date of start-up of the repowered unit's combustion chamber.

(2) Notwithstanding paragraphs (c) and (d) of this section, as of the date of start-up under paragraph (h)(1) of this section, the repowered unit shall be deemed to have the same date of commencement of operation, date of commencement of commercial operation, baseline heat input, and baseline SO_2 emission rate as the original CAIR SO_2 opt-in unit, and the original CAIR SO_2 opt-in unit shall no longer be treated as a CAIR SO_2 opt-in unit or a CAIR SO_2 unit.

[70 FR 25362, May 12, 2005, as amended at 71 FR 25390, Apr. 28, 2006; 71 FR 74794, Dec. 13, 2006]

§ 96.285 CAIR opt-in permit contents.

(a) Each CAIR opt-in permit will contain:

(1) All elements required for a complete CAIR permit application under § 96.222;

(2) The certification in § 96.283(a)(2);

(3) The unit's baseline heat input under § 96.284(c);

(4) The unit's baseline SO_2 emission rate under § 96.284(d);

(5) A statement whether the unit is to be allocated CAIR SO_2 allowances § 96.288(b) or § 96.288(c) (subject to the conditions in §§ 96.284(h) and 96.286(g));

(6) A statement that the unit may withdraw from the CAIR SO_2 Trading Program only in accordance with § 96.286; and

(7) A statement that the unit is subject to, and the owners and operators of the unit must comply with, the requirements of § 96.287.

(b) Each CAIR opt-in permit is deemed to incorporate automatically the definitions of terms under § 96.202 and, upon recordation by the Administrator under subpart FFF or GGG of this part or this subpart, every allocation, transfer, or deduction of CAIR SO_2 allowances to or from the compliance account of the source that includes a CAIR SO_2 opt-in unit covered by the CAIR opt-in permit.

(c) The CAIR opt-in permit shall be included, in a format specified by the permitting authority, in the CAIR permit for the source where the CAIR SO_2 opt-in unit is located and in a title V operating permit or other federally enforceable permit for the source.

[70 FR 25362, May 12, 2005, as amended at 71 FR 25390, Apr. 28, 2006]

§ 96.286 Withdrawal from CAIR SO_2 Trading Program.

Except as provided under paragraph (g) of this section, a CAIR SO_2 opt-in unit may withdraw from the CAIR SO_2 Trading Program, but only if the permitting authority issues a notification to the CAIR designated representative of the CAIR SO_2 opt-in unit of the acceptance of the withdrawal of the CAIR SO_2 opt-in unit in accordance with paragraph (d) of this section.

(a) *Requesting withdrawal.* In order to withdraw a CAIR SO_2 opt-in unit from the CAIR SO_2 Trading Program, the CAIR designated representative of the CAIR SO_2 opt-in unit shall submit to the permitting authority a request to withdraw effective as of midnight of December 31 of a specified calendar year, which date must be at least 4 years after December 31 of the year of entry into the CAIR SO_2 Trading Program under § 96.284(g). The request must be submitted no later than 90 days before the requested effective date of withdrawal.

(b) *Conditions for withdrawal.* Before a CAIR SO_2 opt-in unit covered by a request under paragraph (a) of this section may withdraw from the CAIR SO_2 Trading Program and the CAIR opt-in permit may be terminated under paragraph (e) of this section, the following conditions must be met:

(1) For the control period ending on the date on which the withdrawal is to be effective, the source that includes the CAIR SO_2 opt-in unit must meet the requirement to hold CAIR SO_2 allowances under § 96.206(c) and cannot have any excess emissions.

(2) After the requirement for withdrawal under paragraph (b)(1) of this section is met, the Administrator will deduct from the compliance account of

the source that includes the CAIR SO_2 opt-in unit CAIR SO_2 allowances equal in amount to and allocated for the same or a prior control period as any CAIR SO_2 allowances allocated to the CAIR SO_2 opt-in unit under § 96.288 for any control period for which the withdrawal is to be effective. If there are no remaining CAIR SO_2 units at the source, the Administrator will close the compliance account, and the owners and operators of the CAIR SO_2 opt-in unit may submit a CAIR SO_2 allowance transfer for any remaining CAIR SO_2 allowances to another CAIR SO_2 Allowance Tracking System in accordance with subpart GGG of this part.

(c) *Notification*. (1) After the requirements for withdrawal under paragraphs (a) and (b) of this section are met (including deduction of the full amount of CAIR SO_2 allowances required), the permitting authority will issue a notification to the CAIR designated representative of the CAIR SO_2 opt-in unit of the acceptance of the withdrawal of the CAIR SO_2 opt-in unit as of midnight on December 31 of the calendar year for which the withdrawal was requested.

(2) If the requirements for withdrawal under paragraphs (a) and (b) of this section are not met, the permitting authority will issue a notification to the CAIR designated representative of the CAIR SO_2 opt-in unit that the CAIR SO_2 opt-in unit's request to withdraw is denied. Such CAIR SO_2 opt-in unit shall continue to be a CAIR SO_2 opt-in unit.

(d) *Permit amendment*. After the permitting authority issues a notification under paragraph (c)(1) of this section that the requirements for withdrawal have been met, the permitting authority will revise the CAIR permit covering the CAIR SO_2 opt-in unit to terminate the CAIR opt-in permit for such unit as of the effective date specified under paragraph (c)(1) of this section. The unit shall continue to be a CAIR SO_2 opt-in unit until the effective date of the termination and shall comply with all requirements under the CAIR SO_2 Trading Program concerning any control periods for which the unit is a CAIR SO_2 opt-in unit, even if such requirements arise or must be complied with after the withdrawal takes effect.

(e) *Reapplication upon failure to meet conditions of withdrawal*. If the permitting authority denies the CAIR SO_2 opt-in unit's request to withdraw, the CAIR designated representative may submit another request to withdraw in accordance with paragraphs (a) and (b) of this section.

(f) *Ability to reapply to the CAIR SO_2 Trading Program*. Once a CAIR SO_2 opt-in unit withdraws from the CAIR SO_2 Trading Program and its CAIR opt-in permit is terminated under this section, the CAIR designated representative may not submit another application for a CAIR opt-in permit under § 96.283 for such CAIR SO_2 opt-in unit before the date that is 4 years after the date on which the withdrawal became effective. Such new application for a CAIR opt-in permit will be treated as an initial application for a CAIR opt-in permit under § 96.284.

(g) *Inability to withdraw*. Notwithstanding paragraphs (a) through (f) of this section, a CAIR SO_2 opt-in unit shall not be eligible to withdraw from the CAIR SO_2 Trading Program if the CAIR designated representative of the CAIR SO_2 opt-in unit requests, and the permitting authority issues a CAIR opt-in permit providing for, allocation to the CAIR SO_2 opt-in unit of CAIR SO_2 allowances under § 96.288(c).

[70 FR 25362, May 12, 2005, as amended at 71 FR 25390, Apr. 28, 2006]

§ 96.287 Change in regulatory status.

(a) *Notification*. If a CAIR SO_2 opt-in unit becomes a CAIR SO_2 unit under § 96.204, then the CAIR designated representative shall notify in writing the permitting authority and the Administrator of such change in the CAIR SO_2 opt-in unit's regulatory status, within 30 days of such change.

(b) *Permitting authority's and Administrator's actions*. (1) If a CAIR SO_2 opt-in unit becomes a CAIR SO_2 unit under § 96.204, the permitting authority will revise the CAIR SO_2 opt-in unit's CAIR opt-in permit to meet the requirements of a CAIR permit under § 96.223, and remove the CAIR opt-in permit provisions, as of the date on which the CAIR SO_2 opt-in unit becomes a CAIR SO_2 unit under § 96.204.

(2)(i) The Administrator will deduct from the compliance account of the

source that includes a CAIR SO_2 opt-in unit that becomes a CAIR SO_2 unit under § 96.204, CAIR SO_2 allowances equal in amount to and allocated for the same or a prior control period as:

(A) Any CAIR SO_2 allowances allocated to the CAIR SO_2 opt-in unit under § 96.288 for any control period after the date on which the CAIR SO_2 opt-in unit becomes a CAIR SO_2 unit under § 96.204; and

(B) If the date on which the CAIR SO_2 opt-in unit becomes a CAIR SO_2 unit under § 96.204 is not December 31, the CAIR SO_2 allowances allocated to the CAIR SO_2 opt-in unit under § 96.288 for the control period that includes the date on which the CAIR SO_2 opt-in unit becomes a CAIR SO_2 unit under § 96.204, multiplied by the ratio of the number of days, in the control period, starting with the date on which the CAIR SO_2 opt-in unit becomes a CAIR SO_2 unit under § 96.204 divided by the total number of days in the control period and rounded to the nearest whole allowance as appropriate.

(ii) The CAIR designated representative shall ensure that the compliance account of the source that includes the CAIR SO_2 opt-in unit that becomes a CAIR SO_2 unit under § 96.204 contains the CAIR SO_2 allowances necessary for completion of the deduction under paragraph (b)(2)(i) of this section.

[70 FR 25362, May 12, 2005, as amended at 71 FR 25390, Apr. 28, 2006; 71 FR 74794, Dec. 13, 2006]

§ 96.288 CAIR SO_2 allowance allocations to CAIR SO_2 opt-in units.

(a) *Timing requirements.* (1) When the CAIR opt-in permit is issued under § 96.284(e), the permitting authority will allocate CAIR SO_2 allowances to the CAIR SO_2 opt-in unit, and submit to the Administrator the allocation for the control period in which a CAIR SO_2 opt-in unit enters the CAIR SO_2 Trading Program under § 96.284(g), in accordance with paragraph (b) or (c) of this section.

(2) By no later than October 31 of the control period after the control period in which a CAIR SO_2 opt-in unit enters the CAIR SO_2 Trading Program under § 96.284(g) and October 31 of each year thereafter, the permitting authority will allocate CAIR SO_2 allowances to the CAIR SO_2 opt-in unit, and submit to the Administrator the allocation for the control period that includes such submission deadline and in which the unit is a CAIR SO_2 opt-in unit, in accordance with paragraph (b) or (c) of this section.

(b) *Calculation of allocation.* For each control period for which a CAIR SO_2 opt-in unit is to be allocated CAIR SO_2 allowances, the permitting authority will allocate in accordance with the following procedures:

(1) The heat input (in mmBtu) used for calculating the CAIR SO_2 allowance allocation will be the lesser of:

(i) The CAIR SO_2 opt-in unit's baseline heat input determined under § 96.284(c); or

(ii) The CAIR SO_2 opt-in unit's heat input, as determined in accordance with subpart HHH of this part, for the immediately prior control period, except when the allocation is being calculated for the control period in which the CAIR SO_2 opt-in unit enters the CAIR SO_2 Trading Program under § 96.284(g).

(2) The SO_2 emission rate (in lb/mmBtu) used for calculating CAIR SO_2 allowance allocations will be the lesser of:

(i) The CAIR SO_2 opt-in unit's baseline SO_2 emissions rate (in lb/mmBtu) determined under § 96.284(d) and multiplied by 70 percent; or

(ii) The most stringent State or Federal SO_2 emissions limitation applicable to the CAIR SO_2 opt-in unit at any time during the control period for which CAIR SO_2 allowances are to be allocated.

(3) The permitting authority will allocate CAIR SO_2 allowances to the CAIR SO_2 opt-in unit with a tonnage equivalent equal to, or less than by the smallest possible amount, the heat input under paragraph (b)(1) of this section, multiplied by the SO_2 emission rate under paragraph (b)(2) of this section, and divided by 2,000 lb/ton.

(c) Notwithstanding paragraph (b) of this section and if the CAIR designated representative requests, and the permitting authority issues a CAIR opt-in permit (based on a demonstration of the intent to repower stated under § 96.283(a)(5)) providing for, allocation to a CAIR SO_2 opt-in unit of CAIR SO_2

allowances under this paragraph (subject to the conditions in §§ 96.284(h) and 96.286(g)), the permitting authority will allocate to the CAIR SO_2 opt-in unit as follows:

(1) For each control period in 2010 through 2014 for which the CAIR SO_2 opt-in unit is to be allocated CAIR SO_2 allowances,

(i) The heat input (in mmBtu) used for calculating CAIR SO_2 allowance allocations will be determined as described in paragraph (b)(1) of this section.

(ii) The SO_2 emission rate (in lb/mmBtu) used for calculating CAIR SO_2 allowance allocations will be the lesser of:

(A) The CAIR SO_2 opt-in unit's baseline SO_2 emissions rate (in lb/mmBtu) determined under § 96.284(d); or

(B) The most stringent State or Federal SO_2 emissions limitation applicable to the CAIR SO_2 opt-in unit at any time during the control period in which the CAIR SO_2 opt-in unit enters the CAIR SO_2 Trading Program under § 96.284(g).

(iii) The permitting authority will allocate CAIR SO_2 allowances to the CAIR SO_2 opt-in unit with a tonnage equivalent equal to, or less than by the smallest possible amount, the heat input under paragraph (c)(1)(i) of this section, multiplied by the SO_2 emission rate under paragraph (c)(1)(ii) of this section, and divided by 2,000 lb/ton.

(2) For each control period in 2015 and thereafter for which the CAIR SO_2 opt-in unit is to be allocated CAIR SO_2 allowances,

(i) The heat input (in mmBtu) used for calculating the CAIR SO_2 allowance allocations will be determined as described in paragraph (b)(1) of this section.

(ii) The SO_2 emission rate (in lb/mmBtu) used for calculating the CAIR SO_2 allowance allocation will be the lesser of:

(A) The CAIR SO_2 opt-in unit's baseline SO_2 emissions rate (in lb/mmBtu) determined under § 96.284(d) multiplied by 10 percent; or

(B) The most stringent State or Federal SO_2 emissions limitation applicable to the CAIR SO_2 opt-in unit at any time during the control period for which CAIR SO_2 allowances are to be allocated.

(iii) The permitting authority will allocate CAIR SO_2 allowances to the CAIR SO_2 opt-in unit with a tonnage equivalent equal to, or less than by the smallest possible amount, the heat input under paragraph (c)(2)(i) of this section, multiplied by the SO_2 emission rate under paragraph (c)(2)(ii) of this section, and divided by 2,000 lb/ton.

(d) *Recordation*. (1) The Administrator will record, in the compliance account of the source that includes the CAIR SO_2 opt-in unit, the CAIR SO_2 allowances allocated by the permitting authority to the CAIR SO_2 opt-in unit under paragraph (a)(1) of this section.

(2) By December 1 of the control period in which a CAIR SO_2 opt-in unit enters the CAIR SO_2 Trading Program under § 96.284(g), and December 1 of each year thereafter, the Administrator will record, in the compliance account of the source that includes the CAIR SO_2 opt-in unit, the CAIR SO_2 allowances allocated by the permitting authority to the CAIR SO_2 opt-in unit under paragraph (a)(2) of this section.

[70 FR 25362, May 12, 2005, as amended at 71 FR 25390, Apr. 28, 2006]

Subparts JJJ—ZZZ [Reserved]

Subpart AAAA—CAIR NO_X Ozone Season Trading Program General Provisions

SOURCE: 70 FR 25382, May 12, 2005, unless otherwise noted.

§ 96.301 Purpose.

This subpart and subparts BBBB through IIII establish the model rule comprising general provisions and the designated representative, permitting, allowance, monitoring, and opt-in provisions for the State Clean Air Interstate Rule (CAIR) NO_X Ozone Season Trading Program, under section 110 of the Clean Air Act and § 51.123 of this chapter, as a means of mitigating interstate transport of ozone and nitrogen oxides. The owner or operator of a unit or a source shall comply with the requirements of this subpart and subparts BBBB through IIII as a matter of

federal law only if the State with jurisdiction over the unit and the source incorporates by reference such subparts or otherwise adopts the requirements of such subparts in accordance with § 51.123(aa)(1) or (2), of this chapter, the State submits to the Administrator one or more revisions of the State implementation plan that include such adoption, and the Administrator approves such revisions. If the State adopts the requirements of such subparts in accordance with § 51.123(aa)(1) or (2), (bb), or (dd) of this chapter, then the State authorizes the Administrator to assist the State in implementing the CAIR NO_X Ozone Season Trading Program by carrying out the functions set forth for the Administrator in such subparts.

§ 96.302 Definitions.

The terms used in this subpart and subparts BBBB through IIII shall have the meanings set forth in this section as follows:

Account number means the identification number given by the Administrator to each CAIR NO_X Ozone Season Allowance Tracking System account.

Acid Rain emissions limitation means a limitation on emissions of sulfur dioxide or nitrogen oxides under the Acid Rain Program.

Acid Rain Program means a multistate sulfur dioxide and nitrogen oxides air pollution control and emission reduction program established by the Administrator under title IV of the CAA and parts 72 through 78 of this chapter.

Administrator means the Administrator of the United States Environmental Protection Agency or the Administrator's duly authorized representative.

Allocate or *allocation means*, with regard to CAIR NO_X Ozone Season allowances, the determination by a permitting authority or the Administrator of the amount of such CAIR NO_X Ozone Season allowances to be initially credited to a CAIR NO_X Ozone Season unit, a new unit set-aside, or other entity.

Allowance transfer deadline means, for a control period, midnight of November 30 (if it is a business day), or midnight of the first business day thereafter (if November 30 is not a business day), immediately following the control period and is the deadline by which a CAIR NO_X Ozone Season allowance transfer must be submitted for recordation in a CAIR NO_X Ozone Season source's compliance account in order to be used to meet the source's CAIR NO_X Ozone Season emissions limitation for such control period in accordance with § 96.354.

Alternate CAIR designated representative means, for a CAIR NO_X Ozone Season source and each CAIR NO_X Ozone Season unit at the source, the natural person who is authorized by the owners and operators of the source and all such units at the source, in accordance with subparts BBBB and IIII of this part, to act on behalf of the CAIR designated representative in matters pertaining to the CAIR NO_X Ozone Season Trading Program. If the CAIR NO_X Ozone Season source is also a CAIR NO_X source, then this natural person shall be the same person as the alternate CAIR designated representative under the CAIR NO_X Annual Trading Program. If the CAIR NO_X Ozone Season source is also a CAIR SO_2 source, then this natural person shall be the same person as the alternate CAIR designated representative under the CAIR SO_2 Trading Program. If the CAIR NO_X Ozone Season source is also subject to the Acid Rain Program, then this natural person shall be the same person as the alternate designated representative under the Acid Rain Program. If the CAIR NO_X Ozone Season source is also subject to the Hg Budget Trading Program, then this natural person shall be the same person as the alternate Hg designated representative under the Hg Budget Trading Program.

Automated data acquisition and handling system or *DAHS* means that component of the continuous emission monitoring system, or other emissions monitoring system approved for use under subpart HHHH of this part, designed to interpret and convert individual output signals from pollutant concentration monitors, flow monitors, diluent gas monitors, and other component parts of the monitoring system to produce a continuous record of the measured parameters in the measurement units required by subpart HHHH of this part.

Biomass means—

(1) Any organic material grown for the purpose of being converted to energy;

(2) Any organic byproduct of agriculture that can be converted into energy; or

(3) Any material that can be converted into energy and is nonmerchantable for other purposes, that is segregated from other nonmerchantable material, and that is;

(i) A forest-related organic resource, including mill residues, precommercial thinnings, slash, brush, or byproduct from conversion of trees to merchantable material; or

(ii) A wood material, including pallets, crates, dunnage, manufacturing and construction materials (other than pressure-treated, chemically-treated, or painted wood products), and landscape or right-of-way tree trimmings.

Boiler means an enclosed fossil- or other-fuel-fired combustion device used to produce heat and to transfer heat to recirculating water, steam, or other medium.

Bottoming-cycle cogeneration unit means a cogeneration unit in which the energy input to the unit is first used to produce useful thermal energy and at least some of the reject heat from the useful thermal energy application or process is then used for electricity production.

CAIR authorized account representative means, with regard to a general account, a responsible natural person who is authorized, in accordance with subparts BBBB, FFFF, and IIII of this part, to transfer and otherwise dispose of CAIR NO_X Ozone Season allowances held in the general account and, with regard to a compliance account, the CAIR designated representative of the source.

CAIR designated representative means, for a CAIR NO_X Ozone Season source and each CAIR NO_X Ozone Season unit at the source, the natural person who is authorized by the owners and operators of the source and all such units at the source, in accordance with subparts BBBB and IIII of this part, to represent and legally bind each owner and operator in matters pertaining to the CAIR NO_X Ozone Season Trading Program. If the CAIR NO_X Ozone Season source is also a CAIR NO_X source, then this natural person shall be the same person as the CAIR designated representative under the CAIR NO_X Annual Trading Program. If the CAIR NO_X Ozone Season source is also a CAIR SO_2 source, then this natural person shall be the same person as the CAIR designated representative under the CAIR SO_2 Trading Program. If the CAIR NO_X Ozone Season source is also subject to the Acid Rain Program, then this natural person shall be the same person as the designated representative under the Acid Rain Program. If the CAIR NO_X Ozone Season source is also subject to the Hg Budget Trading Program, then this natural person shall be the same person as the Hg designated representative under the Hg Budget Trading Program.

CAIR NO_X Annual Trading Program means a multi-state nitrogen oxides air pollution control and emission reduction program approved and administered by the Administrator in accordance with subparts AA through II of this part and § 51.123(o)(1) or (2) of this chapter or established by the Administrator in accordance with subparts AA through II of part 97 of this chapter and §§ 51.123(p) and 52.35 of this chapter, as a means of mitigating interstate transport of fine particulates and nitrogen oxides.

CAIR NO_X Ozone Season allowance means a limited authorization issued by a permitting authority or the Administrator under provisions of a State implementation plan that are approved under § 51.123(aa)(1) or (2) (and (bb)(1)), (bb)(2), (dd), or (ee) of this chapter, or under subpart EEEE of part 97 or § 97.388 of this chapter, to emit one ton of nitrogen oxides during a control period of the specified calendar year for which the authorization is allocated or of any calendar year thereafter under the CAIR NO_X Ozone Season Trading Program or a limited authorization issued by a permitting authority for a control period during 2003 through 2008 under the NO_X Budget Trading Program in accordance with § 51.121(p) of this chapter to emit one ton of nitrogen oxides during a control period, provided that the provision in § 51.121(b)(2)(ii)(E) of this chapter shall not be used in applying this definition and the limited authorization shall not

have been used to meet the allowance-holding requirement under the NO_X Budget Trading Program. An authorization to emit nitrogen oxides that is not issued under provisions of a State implementation plan approved under § 51.123(aa)(1) or (2) (and (bb)(1)), (bb)(2), (dd), or (ee) of this chapter or subpart EEEE of part 97 or § 97.388 of this chapter or under the NO_X Budget Trading Program as described in the prior sentence shall not be a CAIR NO_X Ozone Season allowance.

CAIR NO_X Ozone Season allowance deduction or *deduct CAIR NO_X Ozone Season allowances* means the permanent withdrawal of CAIR NO_X Ozone Season allowances by the Administrator from a compliance account, *e.g.*, in order to account for a specified number of tons of total nitrogen oxides emissions from all CAIR NO_X Ozone Season units at a CAIR NO_X Ozone Season source for a control period, determined in accordance with subpart HHHH of this part, or to account for excess emissions.

CAIR NO_X Ozone Season Allowance Tracking System means the system by which the Administrator records allocations, deductions, and transfers of CAIR NO_X Ozone Season allowances under the CAIR NO_X Ozone Season Trading Program. Such allowances will be allocated, held, deducted, or transferred only as whole allowances.

CAIR NO_X Ozone Season Allowance Tracking System account means an account in the CAIR NO_X Ozone Season Allowance Tracking System established by the Administrator for purposes of recording the allocation, holding, transferring, or deducting of CAIR NO_X Ozone Season allowances.

CAIR NO_X Ozone Season allowances held or *hold CAIR NO_X Ozone Season allowances* means the CAIR NO_X Ozone Season allowances recorded by the Administrator, or submitted to the Administrator for recordation, in accordance with subparts FFFF, GGGG, and IIII of this part, in a CAIR NO_X Ozone Season Allowance Tracking System account.

CAIR NO_X Ozone Season emissions limitation means, for a CAIR NO_X Ozone Season source, the tonnage equivalent, in NO_X emissions in a control period, of the CAIR NO_X Ozone Season allowances available for deduction for the source under § 96.354(a) and (b) for the control period.

CAIR NO_X Ozone Season Trading Program means a multi-state nitrogen oxides air pollution control and emission reduction program approved and administered by the Administrator in accordance with subparts AAAA through IIII of this part and § 51.123(aa)(1) or (2) (and (bb)(1)), (bb)(2), or (dd) of this chapter or established by the Administrator in accordance with subparts AAAA through IIII of part 97 of this chapter and §§ 51.123(ee) and 52.35 of this chapter, as a means of mitigating interstate transport of ozone and nitrogen oxides.

CAIR NO_X Ozone Season source means a source that includes one or more CAIR NO_X Ozone Season units.

CAIR NO_X Ozone Season unit means a unit that is subject to the CAIR NO_X Ozone Season Trading Program under § 96.304 and, except for purposes of § 96.305 and subpart EEEE of this part, a CAIR NO_X Ozone Season opt-in unit under subpart IIII of this part.

CAIR NO_X source means a source that is subject to the CAIR NO_X Annual Trading Program.

CAIR permit means the legally binding and federally enforceable written document, or portion of such document, issued by the permitting authority under subpart CCCC of this part, including any permit revisions, specifying the CAIR NO_X Ozone Season Trading Program requirements applicable to a CAIR NO_X Ozone Season source, to each CAIR NO_X Ozone Season unit at the source, and to the owners and operators and the CAIR designated representative of the source and each such unit.

CAIR SO_2 source means a source that is subject to the CAIR SO_2 Trading Program.

CAIR SO_2 Trading Program means a multi-state sulfur dioxide air pollution control and emission reduction program approved and administered by the Administrator in accordance with subparts AAA through III of this part and § 51.124(o)(1) or (2) of this chapter or established by the Administrator in accordance with subparts AAA through III of part 97 of this chapter and §§ 51.124(r) and 52.36 of this chapter, as a

means of mitigating interstate transport of fine particulates and sulfur dioxide.

Clean Air Act or *CAA* means the Clean Air Act, 42 U.S.C. 7401, *et seq*.

Coal means any solid fuel classified as anthracite, bituminous, subbituminous, or lignite.

Coal-derived fuel means any fuel (whether in a solid, liquid, or gaseous state) produced by the mechanical, thermal, or chemical processing of coal.

Coal-fired means:

(1) Except for purposes of subpart EEEE of this part, combusting any amount of coal or coal-derived fuel, alone or in combination with any amount of any other fuel, during any year; or

(2) For purposes of subpart EEEE of this part, combusting any amount of coal or coal-derived fuel, alone or in combination with any amount of any other fuel, during a specified year.

Cogeneration unit means a stationary, fossil-fuel-fired boiler or stationary, fossil-fuel-fired combustion turbine:

(1) Having equipment used to produce electricity and useful thermal energy for industrial, commercial, heating, or cooling purposes through the sequential use of energy; and

(2) Producing during the 12-month period starting on the date the unit first produces electricity and during any calendar year after the calendar year in which the unit first produces electricity—

(i) For a topping-cycle cogeneration unit,

(A) Useful thermal energy not less than 5 percent of total energy output; and

(B) Useful power that, when added to one-half of useful thermal energy produced, is not less then 42.5 percent of total energy input, if useful thermal energy produced is 15 percent or more of total energy output, or not less than 45 percent of total energy input, if useful thermal energy produced is less than 15 percent of total energy output.

(ii) For a bottoming-cycle cogeneration unit, useful power not less than 45 percent of total energy input;

(3) Provided that the total energy input under paragraphs (2)(i)(B) and (2)(ii) of this definition shall equal the unit's total energy input from all fuel except biomass if the unit is a boiler.

Combustion turbine means:

(1) An enclosed device comprising a compressor, a combustor, and a turbine and in which the flue gas resulting from the combustion of fuel in the combustor passes through the turbine, rotating the turbine; and

(2) If the enclosed device under paragraph (1) of this definition is combined cycle, any associated duct burner, heat recovery steam generator, and steam turbine.

Commence commercial operation means, with regard to a unit:

(1) To have begun to produce steam, gas, or other heated medium used to generate electricity for sale or use, including test generation, except as provided in § 96.305 and § 96.384(h).

(i) For a unit that is a CAIR NO_X Ozone Season unit under § 96.304 on the later of November 15, 1990 or the date the unit commences commercial operation as defined in paragraph (1) of this definition and that subsequently undergoes a physical change (other than replacement of the unit by a unit at the same source), such date shall remain the date of commencement of commercial operation of the unit, which shall continue to be treated as the same unit.

(ii) For a unit that is a CAIR NO_X Ozone Season unit under § 96.304 on the later of November 15, 1990 or the date the unit commences commercial operation as defined in paragraph (1) of this definition and that is subsequently replaced by a unit at the same source (*e.g.*, repowered), such date shall remain the replaced unit's date of commencement of commercial operation, and the replacement unit shall be treated as a separate unit with a separate date for commencement of commercial operation as defined in paragraph (1) or (2) of this definition as appropriate.

(2) Notwithstanding paragraph (1) of this definition and except as provided in § 96.305, for a unit that is not a CAIR NO_X Ozone Season unit under § 96.304 on the later of November 15, 1990 or the date the unit commences commercial operation as defined in paragraph (1) of this definition, the unit's date for commencement of commercial operation

shall be the date on which the unit becomes a CAIR NO_X Ozone Season unit under § 96.304.

(i) For a unit with a date for commencement of commercial operation as defined in paragraph (2) of this definition and that subsequently undergoes a physical change (other than replacement of the unit by a unit at the same source), such date shall remain the date of commencement of commercial operation of the unit, which shall continue to be treated as the same unit.

(ii) For a unit with a date for commencement of commercial operation as defined in paragraph (2) of this definition and that is subsequently replaced by a unit at the same source (*e.g.*, repowered), such date shall remain the replaced unit's date of commencement of commercial operation, and the replacement unit shall be treated as a separate unit with a separate date for commencement of commercial operation as defined in paragraph (1) or (2) of this definition as appropriate.

Commence operation means:

(1) To have begun any mechanical, chemical, or electronic process, including, with regard to a unit, start-up of a unit's combustion chamber, except as provided in § 96.384(h).

(2) For a unit that undergoes a physical change (other than replacement of the unit by a unit at the same source) after the date the unit commences operation as defined in paragraph (1) of this definition, such date shall remain the date of commencement of operation of the unit, which shall continue to be treated as the same unit.

(3) For a unit that is replaced by a unit at the same source (*e.g.*, repowered) after the date the unit commences operation as defined in paragraph (1) of this definition, such date shall remain the replaced unit's date of commencement of operation, and the replacement unit shall be treated as a separate unit with a separate date for commencement of operation as defined in paragraph (1), (2), or (3) of this definition as appropriate, except as provided in § 96.384(h).

Common stack means a single flue through which emissions from 2 or more units are exhausted.

Compliance account means a CAIR NO_X Ozone Season Allowance Tracking System account, established by the Administrator for a CAIR NO_X Ozone Season source under subpart FFFF or IIII of this part, in which any CAIR NO_X Ozone Season allowance allocations for the CAIR NO_X Ozone Season units at the source are initially recorded and in which are held any CAIR NO_X Ozone Season allowances available for use for a control period in order to meet the source's CAIR NO_X Ozone Season emissions limitation in accordance with § 96.354.

Continuous emission monitoring system or *CEMS* means the equipment required under subpart HHHH of this part to sample, analyze, measure, and provide, by means of readings recorded at least once every 15 minutes (using an automated data acquisition and handling system (DAHS)), a permanent record of nitrogen oxides emissions, stack gas volumetric flow rate, stack gas moisture content, and oxygen or carbon dioxide concentration (as applicable), in a manner consistent with part 75 of this chapter. The following systems are the principal types of continuous emission monitoring systems required under subpart HHHH of this part:

(1) A flow monitoring system, consisting of a stack flow rate monitor and an automated data acquisition and handling system and providing a permanent, continuous record of stack gas volumetric flow rate, in standard cubic feet per hour (scfh);

(2) A nitrogen oxides concentration monitoring system, consisting of a NO_X pollutant concentration monitor and an automated data acquisition and handling system and providing a permanent, continuous record of NO_X emissions, in parts per million (ppm);

(3) A nitrogen oxides emission rate (or NO_X-diluent) monitoring system, consisting of a NO_X pollutant concentration monitor, a diluent gas (CO_2 or O_2) monitor, and an automated data acquisition and handling system and providing a permanent, continuous record of NO_X concentration, in parts per million (ppm), diluent gas concentration, in percent CO_2 or O_2, and NO_X emission rate, in pounds per million British thermal units (lb/mmBtu);

(4) A moisture monitoring system, as defined in § 75.11(b)(2) of this chapter and providing a permanent, continuous

record of the stack gas moisture content, in percent H_2O;

(5) A carbon dioxide monitoring system, consisting of a CO_2 pollutant concentration monitor (or an oxygen monitor plus suitable mathematical equations from which the CO_2 concentration is derived) and an automated data acquisition and handling system and providing a permanent, continuous record of CO_2 emissions, in percent CO_2; and

(6) An oxygen monitoring system, consisting of an O_2 concentration monitor and an automated data acquisition and handling system and providing a permanent, continuous record of O_2 in percent O_2.

Control period or *ozone season* means the period beginning May 1 of a calendar year, except as provided in § 96.306(c)(2), and ending on September 30 of the same year, inclusive.

Emissions means air pollutants exhausted from a unit or source into the atmosphere, as measured, recorded, and reported to the Administrator by the CAIR designated representative and as determined by the Administrator in accordance with subpart HHHH of this part.

Excess emissions means any ton of nitrogen oxides emitted by the CAIR NO_X Ozone Season units at a CAIR NO_X Ozone Season source during a control period that exceeds the CAIR NO_X Ozone Season emissions limitation for the source.

Fossil fuel means natural gas, petroleum, coal, or any form of solid, liquid, or gaseous fuel derived from such material.

Fossil-fuel-fired means, with regard to a unit, combusting any amount of fossil fuel in any calendar year.

Fuel oil means any petroleum-based fuel (including diesel fuel or petroleum derivatives such as oil tar) and any recycled or blended petroleum products or petroleum by-products used as a fuel whether in a liquid, solid, or gaseous state.

General account means a CAIR NO_X Ozone Season Allowance Tracking System account, established under subpart FFFF of this part, that is not a compliance account.

Generator means a device that produces electricity.

Gross electrical output means, with regard to a cogeneration unit, electricity made available for use, including any such electricity used in the power production process (which process includes, but is not limited to, any on-site processing or treatment of fuel combusted at the unit and any on-site emission controls).

Heat input means, with regard to a specified period of time, the product (in mmBtu/time) of the gross calorific value of the fuel (in Btu/lb) divided by 1,000,000 Btu/mmBtu and multiplied by the fuel feed rate into a combustion device (in lb of fuel/time), as measured, recorded, and reported to the Administrator by the CAIR designated representative and determined by the Administrator in accordance with subpart HHHH of this part and excluding the heat derived from preheated combustion air, recirculated flue gases, or exhaust from other sources.

Heat input rate means the amount of heat input (in mmBtu) divided by unit operating time (in hr) or, with regard to a specific fuel, the amount of heat input attributed to the fuel (in mmBtu) divided by the unit operating time (in hr) during which the unit combusts the fuel.

Life-of-the-unit, firm power contractual arrangement means a unit participation power sales agreement under which a utility or industrial customer reserves, or is entitled to receive, a specified amount or percentage of nameplate capacity and associated energy generated by any specified unit and pays its proportional amount of such unit's total costs, pursuant to a contract:

(1) For the life of the unit;

(2) For a cumulative term of no less than 30 years, including contracts that permit an election for early termination; or

(3) For a period no less than 25 years or 70 percent of the economic useful life of the unit determined as of the time the unit is built, with option rights to purchase or release some portion of the nameplate capacity and associated energy generated by the unit at the end of the period.

Maximum design heat input means the maximum amount of fuel per hour (in Btu/hr) that a unit is capable of combusting on a steady state basis as of

the initial installation of the unit as specified by the manufacturer of the unit.

Monitoring system means any monitoring system that meets the requirements of subpart HHHH of this part, including a continuous emissions monitoring system, an alternative monitoring system, or an excepted monitoring system under part 75 of this chapter.

Most stringent State or Federal NO_X emissions limitation means, with regard to a unit, the lowest NO_X emissions limitation (in terms of lb/mmBtu) that is applicable to the unit under State or Federal law, regardless of the averaging period to which the emissions limitation applies.

Nameplate capacity means, starting from the initial installation of a generator, the maximum electrical generating output (in MWe) that the generator is capable of producing on a steady state basis and during continuous operation (when not restricted by seasonal or other deratings) as of such installation as specified by the manufacturer of the generator or, starting from the completion of any subsequent physical change in the generator resulting in an increase in the maximum electrical generating output (in MWe) that the generator is capable of producing on a steady state basis and during continuous operation (when not restricted by seasonal or other deratings), such increased maximum amount as of such completion as specified by the person conducting the physical change.

Oil-fired means, for purposes of subpart EEEE of this part, combusting fuel oil for more than 15.0 percent of the annual heat input in a specified year and not qualifying as coal-fired.

Operator means any person who operates, controls, or supervises a CAIR NO_X Ozone Season unit or a CAIR NO_X Ozone Season source and shall include, but not be limited to, any holding company, utility system, or plant manager of such a unit or source.

Owner means any of the following persons:

(1) With regard to a CAIR NO_X Ozone Season source or a CAIR NO_X Ozone Season unit at a source, respectively:

(i) Any holder of any portion of the legal or equitable title in a CAIR NO_X Ozone Season unit at the source or the CAIR NO_X Ozone Season unit;

(ii) Any holder of a leasehold interest in a CAIR NO_X Ozone Season unit at the source or the CAIR NO_X Ozone Season unit; or

(iii) Any purchaser of power from a CAIR NO_X Ozone Season unit at the source or the CAIR NO_X Ozone Season unit under a life-of-the-unit, firm power contractual arrangement; provided that, unless expressly provided for in a leasehold agreement, owner shall not include a passive lessor, or a person who has an equitable interest through such lessor, whose rental payments are not based (either directly or indirectly) on the revenues or income from such CAIR NO_X Ozone Season unit; or

(2) With regard to any general account, any person who has an ownership interest with respect to the CAIR NO_X Ozone Season allowances held in the general account and who is subject to the binding agreement for the CAIR authorized account representative to represent the person's ownership interest with respect to CAIR NO_X Ozone Season allowances.

Permitting authority means the State air pollution control agency, local agency, other State agency, or other agency authorized by the Administrator to issue or revise permits to meet the requirements of the CAIR NO_X Ozone Season Trading Program or, if no such agency has been so authorized, the Administrator.

Potential electrical output capacity means 33 percent of a unit's maximum design heat input, divided by 3,413 Btu/kWh, divided by 1,000 kWh/MWh, and multiplied by 8,760 hr/yr.

Receive or receipt of means, when referring to the permitting authority or the Administrator, to come into possession of a document, information, or correspondence (whether sent in hard copy or by authorized electronic transmission), as indicated in an official log, or by a notation made on the document, information, or correspondence, by the permitting authority or the Administrator in the regular course of business.

Recordation, *record*, or *recorded* means, with regard to CAIR NO_X Ozone Season allowances, the movement of CAIR NO_X Ozone Season allowances by the Administrator into or between CAIR NO_X Ozone Season Allowance Tracking System accounts, for purposes of allocation, transfer, or deduction.

Reference method means any direct test method of sampling and analyzing for an air pollutant as specified in § 75.22 of this chapter.

Replacement, *replace*, or *replaced* means, with regard to a unit, the demolishing of a unit, or the permanent shutdown and permanent disabling of a unit, and the construction of another unit (the replacement unit) to be used instead of the demolished or shutdown unit (the replaced unit).

Repowered means, with regard to a unit, replacement of a coal-fired boiler with one of the following coal-fired technologies at the same source as the coal-fired boiler:

(1) Atmospheric or pressurized fluidized bed combustion;

(2) Integrated gasification combined cycle;

(3) Magnetohydrodynamics;

(4) Direct and indirect coal-fired turbines;

(5) Integrated gasification fuel cells; or

(6) As determined by the Administrator in consultation with the Secretary of Energy, a derivative of one or more of the technologies under paragraphs (1) through (5) of this definition and any other coal-fired technology capable of controlling multiple combustion emissions simultaneously with improved boiler or generation efficiency and with significantly greater waste reduction relative to the performance of technology in widespread commercial use as of January 1, 2005.

Serial number means, for a CAIR NO_X Ozone Season allowance, the unique identification number assigned to each CAIR NO_X Ozone Season allowance by the Administrator.

Sequential use of energy means:

(1) For a topping-cycle cogeneration unit, the use of reject heat from electricity production in a useful thermal energy application or process; or

(2) For a bottoming-cycle cogeneration unit, the use of reject heat from useful thermal energy application or process in electricity production.

Solid waste incineration unit means a stationary, fossil-fuel-fired boiler or stationary, fossil-fuel-fired combustion turbine that is a ''solid waste incineration unit'' as defined in section 129(g)(1) of the Clean Air Act.

Source means all buildings, structures, or installations located in one or more contiguous or adjacent properties under common control of the same person or persons. For purposes of section 502(c) of the Clean Air Act, a ''source,'' including a ''source'' with multiple units, shall be considered a single ''facility.''

State means one of the States or the District of Columbia that adopts the CAIR NO_X Ozone Season Trading Program pursuant to § 51.123(aa)(1) or (2), (bb), or (dd) of this chapter.

Submit or serve means to send or transmit a document, information, or correspondence to the person specified in accordance with the applicable regulation:

(1) In person;

(2) By United States Postal Service; or

(3) By other means of dispatch or transmission and delivery. Compliance with any ''submission'' or ''service'' deadline shall be determined by the date of dispatch, transmission, or mailing and not the date of receipt.

Title V operating permit means a permit issued under title V of the Clean Air Act and part 70 or part 71 of this chapter.

Title V operating permit regulations means the regulations that the Administrator has approved or issued as meeting the requirements of title V of the Clean Air Act and part 70 or 71 of this chapter.

Ton means 2,000 pounds. For the purpose of determining compliance with the CAIR NO_X Ozone Season emissions limitation, total tons of nitrogen oxides emissions for a control period shall be calculated as the sum of all recorded hourly emissions (or the mass equivalent of the recorded hourly emission rates) in accordance with subpart HHHH of this part, but with any remaining fraction of a ton equal to or

greater than 0.50 tons deemed to equal one ton and any remaining fraction of a ton less than 0.50 tons deemed to equal zero tons.

Topping-cycle cogeneration unit means a cogeneration unit in which the energy input to the unit is first used to produce useful power, including electricity, and at least some of the reject heat from the electricity production is then used to provide useful thermal energy.

Total energy input means, with regard to a cogeneration unit, total energy of all forms supplied to the cogeneration unit, excluding energy produced by the cogeneration unit itself. Each form of energy supplied shall be measured by the lower heating value of that form of energy calculated as follows:

$$LHV = HHV - 10.55(W + 9H)$$

Where:

LHV = lower heating value of fuel in Btu/lb,
HHV = higher heating value of fuel in Btu/lb,
W = Weight % of moisture in fuel, and
H = Weight % of hydrogen in fuel.

Total energy output means, with regard to a cogeneration unit, the sum of useful power and useful thermal energy produced by the cogeneration unit.

Unit means a stationary, fossil-fuel-fired boiler or combustion turbine or other stationary, fossil-fuel-fired combustion device.

Unit operating day means a calendar day in which a unit combusts any fuel.

Unit operating hour or *hour of unit operation* means an hour in which a unit combusts any fuel.

Useful power means, with regard to a cogeneration unit, electricity or mechanical energy made available for use, excluding any such energy used in the power production process (which process includes, but is not limited to, any on-site processing or treatment of fuel combusted at the unit and any on-site emission controls).

Useful thermal energy means, with regard to a cogeneration unit, thermal energy that is:

(1) Made available to an industrial or commercial process (not a power production process), excluding any heat contained in condensate return or makeup water;

(2) Used in a heating application (e.g., space heating or domestic hot water heating); or

(3) Used in a space cooling application (i.e., thermal energy used by an absorption chiller).

Utility power distribution system means the portion of an electricity grid owned or operated by a utility and dedicated to delivering electricity to customers.

[70 FR 25382, May 12, 2005, as amended at 71 FR 25390, Apr. 28, 2006; 71 FR 74794, Dec. 13, 2006; 72 FR 59206, Oct. 19, 2007]

§ 96.303 Measurements, abbreviations, and acronyms.

Measurements, abbreviations, and acronyms used in this subpart and subparts BBBB through IIII are defined as follows:

Btu—British thermal unit
CO_2—carbon dioxide
H_2O—water
Hg—mercury
hr—hour
kW—kilowatt electrical
kWh—kilowatt hour
lb—pound
mmBtu—million Btu
MWe—megawatt electrical
MWh—megawatt hour
NO_X—nitrogen oxides
O_2—oxygen
ppm—parts per million
scfh—standard cubic feet per hour
SO_2—sulfur dioxide
yr—year

[71 FR 25392, Apr. 28, 2006]

§ 96.304 Applicability.

(a) Except as provided in paragraph (b) of this section:

(1) The following units in a State shall be CAIR NO_X Ozone Season units, and any source that includes one or more such units shall be a CAIR NO_X Ozone Season source, subject to the requirements of this subpart and subparts BBBB through HHHH of this part: any stationary, fossil-fuel-fired boiler or stationary, fossil-fuel-fired combustion turbine serving at any time, since the later of November 15, 1990 or the start-up of the unit's combustion chamber, a generator with nameplate capacity of more than 25 MWe producing electricity for sale.

(2) If a stationary boiler or stationary combustion turbine that, under paragraph (a)(1) of this section, is not a CAIR NO_X Ozone Season unit begins to combust fossil fuel or to serve a generator with nameplate capacity of more than 25 MWe producing electricity for sale, the unit shall become a CAIR NO_X Ozone Season unit as provided in paragraph (a)(1) of this section on the first date on which it both combusts fossil fuel and serves such generator.

(b) The units in a State that meet the requirements set forth in paragraph (b)(1)(i), (b)(2)(i), or (b)(2)(ii) of this section shall not be CAIR NO_X Ozone Season units:

(1)(i) Any unit that is a CAIR NO_X Ozone Season unit under paragraph (a)(1) or (2) of this section:

(A) Qualifying as a cogeneration unit during the 12-month period starting on the date the unit first produces electricity and continuing to qualify as a cogeneration unit; and

(B) Not serving at any time, since the later of November 15, 1990 or the start-up of the unit's combustion chamber, a generator with nameplate capacity of more than 25 MWe supplying in any calendar year more than one-third of the unit's potential electric output capacity or 219,000 MWh, whichever is greater, to any utility power distribution system for sale.

(ii) If a unit qualifies as a cogeneration unit during the 12-month period starting on the date the unit first produces electricity and meets the requirements of paragraphs (b)(1)(i) of this section for at least one calendar year, but subsequently no longer meets all such requirements, the unit shall become a CAIR NO_X Ozone Season unit starting on the earlier of January 1 after the first calendar year during which the unit first no longer qualifies as a cogeneration unit or January 1 after the first calendar year during which the unit no longer meets the requirements of paragraph (b)(1)(i)(B) of this section.

(2)(i) Any unit that is a CAIR NO_X Ozone Season unit under paragraph (a)(1) or (2) of this section commencing operation before January 1, 1985:

(A) Qualifying as a solid waste incineration unit; and

(B) With an average annual fuel consumption of non-fossil fuel for 1985–1987 exceeding 80 percent (on a Btu basis) and an average annual fuel consumption of non-fossil fuel for any 3 consecutive calendar years after 1990 exceeding 80 percent (on a Btu basis).

(ii) Any unit that is a CAIR NO_X Ozone Season unit under paragraph (a)(1) or (2) of this section commencing operation on or after January 1, 1985:

(A) Qualifying as a solid waste incineration unit; and

(B) With an average annual fuel consumption of non-fossil fuel for the first 3 calendar years of operation exceeding 80 percent (on a Btu basis) and an average annual fuel consumption of non-fossil fuel for any 3 consecutive calendar years after 1990 exceeding 80 percent (on a Btu basis).

(iii) If a unit qualifies as a solid waste incineration unit and meets the requirements of paragraph (b)(2)(i) or (ii) of this section for at least 3 consecutive calendar years, but subsequently no longer meets all such requirements, the unit shall become a CAIR NO_X Ozone Season unit starting on the earlier of January 1 after the first calendar year during which the unit first no longer qualifies as a solid waste incineration unit or January 1 after the first 3 consecutive calendar years after 1990 for which the unit has an average annual fuel consumption of fossil fuel of 20 percent or more.

[71 FR 25392, Apr. 28, 2006 as amended at 71 FR 74794, Dec. 13, 2006]

§ 96.305 Retired unit exemption.

(a)(1) Any CAIR NO_X Ozone Season unit that is permanently retired and is not a CAIR NO_X Ozone Season opt-in unit under subpart IIII of this part shall be exempt from the CAIR NO_X Ozone Season Trading Program, except for the provisions of this section, § 96.302, § 96.303, § 96.304, § 96.306(c)(4) through (7), § 96.307, § 96.308, and subparts BBBB and EEEE through GGGG of this part.

(2) The exemption under paragraph (a)(1) of this section shall become effective the day on which the CAIR NO_X Ozone Season unit is permanently retired. Within 30 days of the unit's permanent retirement, the CAIR designated representative shall submit a

statement to the permitting authority otherwise responsible for administering any CAIR permit for the unit and shall submit a copy of the statement to the Administrator. The statement shall state, in a format prescribed by the permitting authority, that the unit was permanently retired on a specific date and will comply with the requirements of paragraph (b) of this section.

(3) After receipt of the statement under paragraph (a)(2) of this section, the permitting authority will amend any permit under subpart CCCC of this part covering the source at which the unit is located to add the provisions and requirements of the exemption under paragraphs (a)(1) and (b) of this section.

(b) *Special provisions.* (1) A unit exempt under paragraph (a) of this section shall not emit any nitrogen oxides, starting on the date that the exemption takes effect.

(2) The permitting authority will allocate CAIR NO_X Ozone Season allowances under subpart EEEE of this part to a unit exempt under paragraph (a) of this section.

(3) For a period of 5 years from the date the records are created, the owners and operators of a unit exempt under paragraph (a) of this section shall retain, at the source that includes the unit, records demonstrating that the unit is permanently retired. The 5-year period for keeping records may be extended for cause, at any time before the end of the period, in writing by the permitting authority or the Administrator. The owners and operators bear the burden of proof that the unit is permanently retired.

(4) The owners and operators and, to the extent applicable, the CAIR designated representative of a unit exempt under paragraph (a) of this section shall comply with the requirements of the CAIR NO_X Ozone Season Trading Program concerning all periods for which the exemption is not in effect, even if such requirements arise, or must be complied with, after the exemption takes effect.

(5) A unit exempt under paragraph (a) of this section and located at a source that is required, or but for this exemption would be required, to have a title V operating permit shall not resume operation unless the CAIR designated representative of the source submits a complete CAIR permit application under § 96.322 for the unit not less than 18 months (or such lesser time provided by the permitting authority) before the later of January 1, 2009 or the date on which the unit resumes operation.

(6) On the earlier of the following dates, a unit exempt under paragraph (a) of this section shall lose its exemption:

(i) The date on which the CAIR designated representative submits a CAIR permit application for the unit under paragraph (b)(5) of this section;

(ii) The date on which the CAIR designated representative is required under paragraph (b)(5) of this section to submit a CAIR permit application for the unit; or

(iii) The date on which the unit resumes operation, if the CAIR designated representative is not required to submit a CAIR permit application for the unit.

(7) For the purpose of applying monitoring, reporting, and recordkeeping requirements under subpart HHHH of this part, a unit that loses its exemption under paragraph (a) of this section shall be treated as a unit that commences commercial operation on the first date on which the unit resumes operation.

[70 FR 25382, May 12, 2005, as amended at 71 FR 25393, Apr. 28, 2006]

§ 96.306 Standard requirements.

(a) *Permit requirements.* (1) The CAIR designated representative of each CAIR NO_X Ozone Season source required to have a title V operating permit and each CAIR NO_X Ozone Season unit required to have a title V operating permit at the source shall:

(i) Submit to the permitting authority a complete CAIR permit application under § 96.322 in accordance with the deadlines specified in § 96.321; and

(ii) Submit in a timely manner any supplemental information that the permitting authority determines is necessary in order to review a CAIR permit application and issue or deny a CAIR permit.

(2) The owners and operators of each CAIR NO_X Ozone Season source required to have a title V operating permit and each CAIR NO_X Ozone Season unit required to have a title V operating permit at the source shall have a CAIR permit issued by the permitting authority under subpart CCCC of this part for the source and operate the source and the unit in compliance with such CAIR permit.

(3) Except as provided in subpart IIII of this part, the owners and operators of a CAIR NO_X Ozone Season source that is not otherwise required to have a title V operating permit and each CAIR NO_X Ozone Season unit that is not otherwise required to have a title V operating permit are not required to submit a CAIR permit application, and to have a CAIR permit, under subpart CCCC of this part for such CAIR NO_X Ozone Season source and such CAIR NO_X Ozone Season unit.

(b) *Monitoring, reporting, and recordkeeping requirements.* (1) The owners and operators, and the CAIR designated representative, of each CAIR NO_X Ozone Season source and each CAIR NO_X Ozone Season unit at the source shall comply with the monitoring, reporting, and recordkeeping requirements of subpart HHHH of this part.

(2) The emissions measurements recorded and reported in accordance with subpart HHHH of this part shall be used to determine compliance by each CAIR NO_X Ozone Season source with the CAIR NO_X Ozone Season emissions limitation under paragraph (c) of this section.

(c) *Nitrogen oxides ozone season emission requirements.* (1) As of the allowance transfer deadline for a control period, the owners and operators of each CAIR NO_X Ozone Season source and each CAIR NO_X Ozone Season unit at the source shall hold, in the source's compliance account, CAIR NO_X Ozone Season allowances available for compliance deductions for the control period under § 96.354(a) in an amount not less than the tons of total nitrogen oxides emissions for the control period from all CAIR NO_X Ozone Season units at the source, as determined in accordance with subpart HHHH of this part.

(2) A CAIR NO_X Ozone Season unit shall be subject to the requirements under paragraph (c)(1) of this section for the control period starting on the later of May 1, 2009 or the deadline for meeting the unit's monitor certification requirements under § 96.370(b)(1), (2), (3), or (7) and for each control period thereafter.

(3) A CAIR NO_X Ozone Season allowance shall not be deducted, for compliance with the requirements under paragraph (c)(1) of this section, for a control period in a calendar year before the year for which the CAIR NO_X Ozone Season allowance was allocated.

(4) CAIR NO_X Ozone Season allowances shall be held in, deducted from, or transferred into or among CAIR NO_X Ozone Season Allowance Tracking System accounts in accordance with subparts FFFF, GGGG, and IIII of this part.

(5) A CAIR NO_X Ozone Season allowance is a limited authorization to emit one ton of nitrogen oxides in accordance with the CAIR NO_X Ozone Season Trading Program. No provision of the CAIR NO_X Ozone Season Trading Program, the CAIR permit application, the CAIR permit, or an exemption under § 96.305 and no provision of law shall be construed to limit the authority of the State or the United States to terminate or limit such authorization.

(6) A CAIR NO_X Ozone Season allowance does not constitute a property right.

(7) Upon recordation by the Administrator under subpart FFFF, GGGG, or IIII of this part, every allocation, transfer, or deduction of a CAIR NO_X Ozone Season allowance to or from a CAIR NO_X Ozone Season source's compliance account is incorporated automatically in any CAIR permit of the source.

(d) *Excess emissions requirements.* If a CAIR NO_X Ozone Season source emits nitrogen oxides during any control period in excess of the CAIR NO_X Ozone Season emissions limitation, then:

(1) The owners and operators of the source and each CAIR NO_X Ozone Season unit at the source shall surrender the CAIR NO_X Ozone Season allowances required for deduction under § 96.354(d)(1) and pay any fine, penalty, or assessment or comply with any other remedy imposed, for the same

violations, under the Clean Air Act or applicable State law; and

(2) Each ton of such excess emissions and each day of such control period shall constitute a separate violation of this subpart, the Clean Air Act, and applicable State law.

(e) *Recordkeeping and reporting requirements.* (1) Unless otherwise provided, the owners and operators of the CAIR NO_X Ozone Season source and each CAIR NO_X Ozone Season unit at the source shall keep on site at the source each of the following documents for a period of 5 years from the date the document is created. This period may be extended for cause, at any time before the end of 5 years, in writing by the permitting authority or the Administrator.

(i) The certificate of representation under § 96.313 for the CAIR designated representative for the source and each CAIR NO_X Ozone Season unit at the source and all documents that demonstrate the truth of the statements in the certificate of representation; provided that the certificate and documents shall be retained on site at the source beyond such 5-year period until such documents are superseded because of the submission of a new certificate of representation under § 96.313 changing the CAIR designated representative.

(ii) All emissions monitoring information, in accordance with subpart HHHH of this part, provided that to the extent that subpart HHHH of this part provides for a 3-year period for recordkeeping, the 3-year period shall apply.

(iii) Copies of all reports, compliance certifications, and other submissions and all records made or required under the CAIR NO_X Ozone Season Trading Program.

(iv) Copies of all documents used to complete a CAIR permit application and any other submission under the CAIR NO_X Ozone Season Trading Program or to demonstrate compliance with the requirements of the CAIR NO_X Ozone Season Trading Program.

(2) The CAIR designated representative of a CAIR NO_X Ozone Season source and each CAIR NO_X Ozone Season unit at the source shall submit the reports required under the CAIR NO_X Ozone Season Trading Program, including those under subpart HHHH of this part.

(f) *Liability.* (1) Each CAIR NO_X Ozone Season source and each CAIR NO_X Ozone Season unit shall meet the requirements of the CAIR NO_X Ozone Season Trading Program.

(2) Any provision of the CAIR NO_X Ozone Season Trading Program that applies to a CAIR NO_X Ozone Season source or the CAIR designated representative of a CAIR NO_X Ozone Season source shall also apply to the owners and operators of such source and of the CAIR NO_X Ozone Season units at the source.

(3) Any provision of the CAIR NO_X Ozone Season Trading Program that applies to a CAIR NO_X Ozone Season unit or the CAIR designated representative of a CAIR NO_X Ozone Season unit shall also apply to the owners and operators of such unit.

(g) *Effect on other authorities.* No provision of the CAIR NO_X Ozone Season Trading Program, a CAIR permit application, a CAIR permit, or an exemption under § 96.305 shall be construed as exempting or excluding the owners and operators, and the CAIR designated representative, of a CAIR NO_X Ozone Season source or CAIR NO_X Ozone Season unit from compliance with any other provision of the applicable, approved State implementation plan, a federally enforceable permit, or the Clean Air Act.

[70 FR 25382, May 12, 2005, as amended at 71 FR 25393, Apr. 28, 2006]

§ 96.307 Computation of time.

(a) Unless otherwise stated, any time period scheduled, under the CAIR NO_X Ozone Season Trading Program, to begin on the occurrence of an act or event shall begin on the day the act or event occurs.

(b) Unless otherwise stated, any time period scheduled, under the CAIR NO_X Ozone Season Trading Program, to begin before the occurrence of an act or event shall be computed so that the period ends the day before the act or event occurs.

(c) Unless otherwise stated, if the final day of any time period, under the CAIR NO_X Ozone Season Trading Program, falls on a weekend or a State or

Federal holiday, the time period shall be extended to the next business day.

§ 96.308 Appeal procedures.

The appeal procedures for decisions of the Administrator under the CAIR NO_X Ozone Season Trading Program are set forth in part 78 of this chapter.

Subpart BBBB—CAIR Designated Representative for CAIR NO_X Ozone Season Sources

SOURCE: 70 FR 25382, May 12, 2005, unless otherwise noted.

§ 96.310 Authorization and responsibilities of CAIR designated representative.

(a) Except as provided under § 96.311, each CAIR NO_X Ozone Season source, including all CAIR NO_X Ozone Season units at the source, shall have one and only one CAIR designated representative, with regard to all matters under the CAIR NO_X Ozone Season Trading Program concerning the source or any CAIR NO_X Ozone Season unit at the source.

(b) The CAIR designated representative of the CAIR NO_X Ozone Season source shall be selected by an agreement binding on the owners and operators of the source and all CAIR NO_X Ozone Season units at the source and shall act in accordance with the certification statement in § 96.313(a)(4)(iv).

(c) Upon receipt by the Administrator of a complete certificate of representation under § 96.313, the CAIR designated representative of the source shall represent and, by his or her representations, actions, inactions, or submissions, legally bind each owner and operator of the CAIR NO_X Ozone Season source represented and each CAIR NO_X Ozone Season unit at the source in all matters pertaining to the CAIR NO_X Ozone Season Trading Program, notwithstanding any agreement between the CAIR designated representative and such owners and operators. The owners and operators shall be bound by any decision or order issued to the CAIR designated representative by the permitting authority, the Administrator, or a court regarding the source or unit.

(d) No CAIR permit will be issued, no emissions data reports will be accepted, and no CAIR NO_X Ozone Season Allowance Tracking System account will be established for a CAIR NO_X Ozone Season unit at a source, until the Administrator has received a complete certificate of representation under § 96.313 for a CAIR designated representative of the source and the CAIR NO_X Ozone Season units at the source.

(e)(1) Each submission under the CAIR NO_X Ozone Season Trading Program shall be submitted, signed, and certified by the CAIR designated representative for each CAIR NO_X Ozone Season source on behalf of which the submission is made. Each such submission shall include the following certification statement by the CAIR designated representative: ''I am authorized to make this submission on behalf of the owners and operators of the source or units for which the submission is made. I certify under penalty of law that I have personally examined, and am familiar with, the statements and information submitted in this document and all its attachments. Based on my inquiry of those individuals with primary responsibility for obtaining the information, I certify that the statements and information are to the best of my knowledge and belief true, accurate, and complete. I am aware that there are significant penalties for submitting false statements and information or omitting required statements and information, including the possibility of fine or imprisonment.''

(2) The permitting authority and the Administrator will accept or act on a submission made on behalf of owner or operators of a CAIR NO_X Ozone Season source or a CAIR NO_X Ozone Season unit only if the submission has been made, signed, and certified in accordance with paragraph (e)(1) of this section.

§ 96.311 Alternate CAIR designated representative.

(a) A certificate of representation under § 96.313 may designate one and only one alternate CAIR designated representative, who may act on behalf of the CAIR designated representative. The agreement by which the alternate

CAIR designated representative is selected shall include a procedure for authorizing the alternate CAIR designated representative to act in lieu of the CAIR designated representative.

(b) Upon receipt by the Administrator of a complete certificate of representation under § 96.313, any representation, action, inaction, or submission by the alternate CAIR designated representative shall be deemed to be a representation, action, inaction, or submission by the CAIR designated representative.

(c) Except in this section and §§ 96.302, 96.310(a) and (d), 96.312, 96.313, 96.315, 96.351, and 96.382 whenever the term ''CAIR designated representative'' is used in subparts AAAA through IIII of this part, the term shall be construed to include the CAIR designated representative or any alternate CAIR designated representative.

[70 FR 25382, May 12, 2005, as amended at 71 FR 25393, Apr. 28, 2006]

§ 96.312 Changing CAIR designated representative and alternate CAIR designated representative; changes in owners and operators.

(a) *Changing CAIR designated representative.* The CAIR designated representative may be changed at any time upon receipt by the Administrator of a superseding complete certificate of representation under § 96.313. Notwithstanding any such change, all representations, actions, inactions, and submissions by the previous CAIR designated representative before the time and date when the Administrator receives the superseding certificate of representation shall be binding on the new CAIR designated representative and the owners and operators of the CAIR NO_X Ozone Season source and the CAIR NO_X Ozone Season units at the source.

(b) *Changing alternate CAIR designated representative.* The alternate CAIR designated representative may be changed at any time upon receipt by the Administrator of a superseding complete certificate of representation under § 96.313. Notwithstanding any such change, all representations, actions, inactions, and submissions by the previous alternate CAIR designated representative before the time and date when the Administrator receives the superseding certificate of representation shall be binding on the new alternate CAIR designated representative and the owners and operators of the CAIR NO_X Ozone Season source and the CAIR NO_X Ozone Season units at the source.

(c) *Changes in owners and operators.* (1) In the event an owner or operator of a CAIR NO_X Ozone Season source or a CAIR NO_X Ozone Season unit is not included in the list of owners and operators in the certificate of representation under § 96.313, such owner or operator shall be deemed to be subject to and bound by the certificate of representation, the representations, actions, inactions, and submissions of the CAIR designated representative and any alternate CAIR designated representative of the source or unit, and the decisions and orders of the permitting authority, the Administrator, or a court, as if the owner or operator were included in such list.

(2) Within 30 days following any change in the owners and operators of a CAIR NO_X Ozone Season source or a CAIR NO_X Ozone Season unit, including the addition of a new owner or operator, the CAIR designated representative or any alternate CAIR designated representative shall submit a revision to the certificate of representation under § 96.313 amending the list of owners and operators to include the change.

[70 FR 25382, May 12, 2005, as amended at 71 FR 25393, Apr. 28, 2006]

§ 96.313 Certificate of representation.

(a) A complete certificate of representation for a CAIR designated representative or an alternate CAIR designated representative shall include the following elements in a format prescribed by the Administrator:

(1) Identification of the CAIR NO_X Ozone Season source, and each CAIR NO_X Ozone Season unit at the source, for which the certificate of representation is submitted, including identification and nameplate capacity of each generator served by each such unit.

(2) The name, address, e-mail address (if any), telephone number, and facsimile transmission number (if any) of the CAIR designated representative

and any alternate CAIR designated representative.

(3) A list of the owners and operators of the CAIR NO_X Ozone Season source and of each CAIR NO_X Ozone Season unit at the source.

(4) The following certification statements by the CAIR designated representative and any alternate CAIR designated representative—

(i) ''I certify that I was selected as the CAIR designated representative or alternate CAIR designated representative, as applicable, by an agreement binding on the owners and operators of the source and each CAIR NO_X Ozone Season unit at the source.''

(ii) ''I certify that I have all the necessary authority to carry out my duties and responsibilities under the CAIR NO_X Ozone Season Trading Program on behalf of the owners and operators of the source and of each CAIR NO_X Ozone Season unit at the source and that each such owner and operator shall be fully bound by my representations, actions, inactions, or submissions.''

(iii) ''I certify that the owners and operators of the source and of each CAIR NO_X Ozone Season unit at the source shall be bound by any order issued to me by the Administrator, the permitting authority, or a court regarding the source or unit.''

(iv) ''Where there are multiple holders of a legal or equitable title to, or a leasehold interest in, a CAIR NO_X Ozone Season unit, or where a utility or industrial customer purchases power from a CAIR NO_X Ozone Season unit under a life-of-the-unit, firm power contractual arrangement, I certify that: I have given a written notice of my selection as the 'CAIR designated representative' or 'alternate CAIR designated representative', as applicable, and of the agreement by which I was selected to each owner and operator of the source and of each CAIR NO_X Ozone Season unit at the source; and CAIR NO_X Ozone Season allowances and proceeds of transactions involving CAIR NO_X Ozone Season allowances will be deemed to be held or distributed in proportion to each holder's legal, equitable, leasehold, or contractual reservation or entitlement, except that, if such multiple holders have expressly provided for a different distribution of CAIR NO_X Ozone Season allowances by contract, CAIR NO_X Ozone Season allowances and proceeds of transactions involving CAIR NO_X Ozone Season allowances will be deemed to be held or distributed in accordance with the contract.''

(5) The signature of the CAIR designated representative and any alternate CAIR designated representative and the dates signed.

(b) Unless otherwise required by the permitting authority or the Administrator, documents of agreement referred to in the certificate of representation shall not be submitted to the permitting authority or the Administrator. Neither the permitting authority nor the Administrator shall be under any obligation to review or evaluate the sufficiency of such documents, if submitted.

[70 FR 25382, May 12, 2005, as amended at 71 FR 25393, Apr. 28, 2006]

§ 96.314 Objections concerning CAIR designated representative.

(a) Once a complete certificate of representation under § 96.313 has been submitted and received, the permitting authority and the Administrator will rely on the certificate of representation unless and until a superseding complete certificate of representation under § 96.313 is received by the Administrator.

(b) Except as provided in § 96.312(a) or (b), no objection or other communication submitted to the permitting authority or the Administrator concerning the authorization, or any representation, action, inaction, or submission, of the CAIR designated representative shall affect any representation, action, inaction, or submission of the CAIR designated representative or the finality of any decision or order by the permitting authority or the Administrator under the CAIR NO_X Ozone Season Trading Program.

(c) Neither the permitting authority nor the Administrator will adjudicate any private legal dispute concerning the authorization or any representation, action, inaction, or submission of any CAIR designated representative,

including private legal disputes concerning the proceeds of CAIR NO_X Ozone Season allowance transfers.

§ 96.315 Delegation by CAIR designated representative and alternate CAIR designated representative.

(a) A CAIR designated representative may delegate, to one or more natural persons, his or her authority to make an electronic submission to the Administrator provided for or required under this part.

(b) An alternate CAIR designated representative may delegate, to one or more natural persons, his or her authority to make an electronic submission to the Administrator provided for or required under this part.

(c) In order to delegate authority to make an electronic submission to the Administrator in accordance with paragraph (a) or (b) of this section, the CAIR designated representative or alternate CAIR designated representative, as appropriate, must submit to the Administrator a notice of delegation, in a format prescribed by the Administrator, that includes the following elements:

(1) The name, address, e-mail address, telephone number, and facsimile transmission number (if any) of such CAIR designated representative or alternate CAIR designated representative;

(2) The name, address, e-mail address, telephone number, and facsimile transmission number (if any) of each such natural person (referred to as an ''agent'');

(3) For each such natural person, a list of the type or types of electronic submissions under paragraph (a) or (b) of this section for which authority is delegated to him or her; and

(4) The following certification statements by such CAIR designated representative or alternate CAIR designated representative:

(i) ''I agree that any electronic submission to the Administrator that is by an agent identified in this notice of delegation and of a type listed for such agent in this notice of delegation and that is made when I am a CAIR designated representative or alternate CAIR designated representative, as appropriate, and before this notice of delegation is superseded by another notice of delegation under 40 CFR 96.315(d) shall be deemed to be an electronic submission by me.''

(ii) ''Until this notice of delegation is superseded by another notice of delegation under 40 CFR 96.315(d), I agree to maintain an e-mail account and to notify the Administrator immediately of any change in my e-mail address unless all delegation of authority by me under 40 CFR 96.315 is terminated.''.

(d) A notice of delegation submitted under paragraph (c) of this section shall be effective, with regard to the CAIR designated representative or alternate CAIR designated representative identified in such notice, upon receipt of such notice by the Administrator and until receipt by the Administrator of a superseding notice of delegation submitted by such CAIR designated representative or alternate CAIR designated representative, as appropriate. The superseding notice of delegation may replace any previously identified agent, add a new agent, or eliminate entirely any delegation of authority.

(e) Any electronic submission covered by the certification in paragraph (c)(4)(i) of this section and made in accordance with a notice of delegation effective under paragraph (d) of this section shall be deemed to be an electronic submission by the CAIR designated representative or alternate CAIR designated representative submitting such notice of delegation.

[71 FR 25393, Apr. 28, 2006]

Subpart CCCC—Permits

SOURCE: 70 FR 25382, May 12, 2005, unless otherwise noted.

§ 96.320 General CAIR NO_X Ozone Season Trading Program permit requirements.

(a) For each CAIR NO_X Ozone Season source required to have a title V operating permit or required, under subpart IIII of this part, to have a title V operating permit or other federally enforceable permit, such permit shall include a CAIR permit administered by the permitting authority for the title V operating permit or the federally enforceable permit as applicable. The CAIR

portion of the title V permit or other federally enforceable permit as applicable shall be administered in accordance with the permitting authority's title V operating permits regulations promulgated under part 70 or 71 of this chapter or the permitting authority's regulations for other federally enforceable permits as applicable, except as provided otherwise by § 96.305, this subpart and subpart IIII of this part.

(b) Each CAIR permit shall contain, with regard to the CAIR NO_X Ozone Season source and the CAIR NO_X Ozone Season units at the source covered by the CAIR permit, all applicable CAIR NO_X Ozone Season Trading Program, CAIR NO_X Annual Trading Program, and CAIR SO_2 Trading Program requirements and shall be a complete and separable portion of the title V operating permit or other federally enforceable permit under paragraph (a) of this section.

[70 FR 25382, May 12, 2005, as amended at 71 FR 25394, Apr. 28, 2006]

§ 96.321 Submission of CAIR permit applications.

(a) *Duty to apply*. The CAIR designated representative of any CAIR NO_X Ozone Season source required to have a title V operating permit shall submit to the permitting authority a complete CAIR permit application under § 96.322 for the source covering each CAIR NO_X Ozone Season unit at the source at least 18 months (or such lesser time provided by the permitting authority) before the later of January 1, 2009 or the date on which the CAIR NO_X Ozone Season unit commences commercial operation, except as provided in § 96.383(a).

(b) *Duty to Reapply*. For a CAIR NO_X Ozone Season source required to have a title V operating permit, the CAIR designated representative shall submit a complete CAIR permit application under § 96.322 for the source covering each CAIR NO_X Ozone Season unit at the source to renew the CAIR permit in accordance with the permitting authority's title V operating permits regulations addressing permit renewal, except as provided in § 96.383(b).

[70 FR 25382, May 12, 2005, as amended at 71 FR 25394, Apr. 28, 2006]

§ 96.322 Information requirements for CAIR permit applications.

A complete CAIR permit application shall include the following elements concerning the CAIR NO_X Ozone Season source for which the application is submitted, in a format prescribed by the permitting authority:

(a) Identification of the CAIR NO_X Ozone Season source;

(b) Identification of each CAIR NO_X Ozone Season unit at the CAIR NO_X Ozone Season source; and

(c) The standard requirements under § 96.306.

§ 96.323 CAIR permit contents and term.

(a) Each CAIR permit will contain, in a format prescribed by the permitting authority, all elements required for a complete CAIR permit application under § 96.322.

(b) Each CAIR permit is deemed to incorporate automatically the definitions of terms under § 96.302 and, upon recordation by the Administrator under subpart FFFF, GGGG, or IIII of this part, every allocation, transfer, or deduction of a CAIR NO_X Ozone Season allowance to or from the compliance account of the CAIR NO_X Ozone Season source covered by the permit.

(c) The term of the CAIR permit will be set by the permitting authority, as necessary to facilitate coordination of the renewal of the CAIR permit with issuance, revision, or renewal of the CAIR NO_X Ozone Season source's title V operating permit or other federally enforceable permit as applicable.

§ 96.324 CAIR permit revisions.

Except as provided in § 96.323(b), the permitting authority will revise the CAIR permit, as necessary, in accordance with the permitting authority's title V operating permits regulations or the permitting authority's regulations for other federally enforceable permits as applicable addressing permit revisions.

Subpart DDDD [Reserved]

Subpart EEEE—CAIR NO_X Ozone Season Allowance Allocations

SOURCE: 70 FR 25382, May 12, 2005, unless otherwise noted.

§ 96.340 State trading budgets.

(a) Except as provided in paragraph (b) of this section, the State trading budgets for annual allocations of CAIR NO_X Ozone Season allowances for the control periods in 2009 through 2014 and in 2015 and thereafter are respectively as follows:

State	State trading budget for 2009–2014 (tons)	State trading budget for 2015 and thereafter (tons)
Alabama	32,182	26,818
Arkansas	11,515	9,596
Connecticut	2,559	2,559
Delaware	2,226	1,855
District of Columbia	112	94
Florida	47,912	39,926
Illinois	30,701	28,981
Indiana	45,952	39,273
Iowa	14,263	11,886
Kentucky	36,045	30,587
Louisiana	17,085	14,238
Maryland	12,834	10,695
Massachusetts	7,551	6,293
Michigan	28,971	24,142
Mississippi	8,714	7,262
Missouri	26,678	22,231
New Jersey	6,654	5,545
New York	20,632	17,193
North Carolina	28,392	23,660
Ohio	45,664	39,945
Pennsylvania	42,171	35,143
South Carolina	15,249	12,707
Tennessee	22,842	19,035
Virginia	15,994	13,328
West Virginia	26,859	26,525
Wisconsin	17,987	14,989

(b) If a permitting authority issues additional CAIR NO_X Ozone Season allowance allocations under § 51.123(aa)(2)(iii)(A) of this chapter, the amount in the State trading budget for a control period in a calendar year will be the sum of the amount set forth for the State and for the year in paragraph (a) of this section and the amount of additional CAIR NO_X Ozone Season allowance allocations issued under § 51.123(aa)(2)(iii)(A) of this chapter for the year.

§ 96.341 Timing requirements for CAIR NO_X Ozone Season allowance allocations.

(a) By October 31, 2006, the permitting authority will submit to the Administrator the CAIR NO_X Ozone Season allowance allocations, in a format prescribed by the Administrator and in accordance with § 96.342(a) and (b), for the control periods in 2009, 2010, 2011, 2012, 2013, and 2014.

(b) By October 31, 2009 and October 31 of each year thereafter, the permitting authority will submit to the Administrator the CAIR NO_X Ozone Season allowance allocations, in a format prescribed by the Administrator and in accordance with § 96.342(a) and (b), for the control period in the sixth year after the year of the applicable deadline for submission under this paragraph.

(c) By July 31, 2009 and July 31 of each year thereafter, the permitting authority will submit to the Administrator the CAIR NO_X Ozone Season allowance allocations, in a format prescribed by the Administrator and in accordance with § 96.342(c), (a), and (d), for the control period in the year of the applicable deadline for submission under this paragraph.

[70 FR 25382, May 12, 2005, as amended at 71 FR 25394, Apr. 28, 2006]

§ 96.342 CAIR NO_X Ozone Season allowance allocations.

(a)(1) The baseline heat input (in mmBtu) used with respect to CAIR NO_X Ozone Season allowance allocations under paragraph (b) of this section for each CAIR NO_X Ozone Season unit will be:

(i) For units commencing operation before January 1, 2001 the average of the 3 highest amounts of the unit's adjusted control period heat input for 2000 through 2004, with the adjusted control period heat input for each year calculated as follows:

(A) If the unit is coal-fired during the year, the unit's control period heat input for such year is multiplied by 100 percent;

(B) If the unit is oil-fired during the year, the unit's control period heat input for such year is multiplied by 60 percent; and

(C) If the unit is not subject to paragraph (a)(1)(i)(A) or (B) of this section, the unit's control period heat input for such year is multiplied by 40 percent.

(ii) For units commencing operation on or after January 1, 2001 and operating each calendar year during a period of 5 or more consecutive calendar

years, the average of the 3 highest amounts of the unit's total converted control period heat input over the first such 5 years.

(2)(i) A unit's control period heat input, and a unit's status as coal-fired or oil-fired, for a calendar year under paragraph (a)(1)(i) of this section, and a unit's total tons of NO_X emissions during a control period in a calendar year under paragraph (c)(3) of this section, will be determined in accordance with part 75 of this chapter, to the extent the unit was otherwise subject to the requirements of part 75 of this chapter for the year, or will be based on the best available data reported to the permitting authority for the unit, to the extent the unit was not otherwise subject to the requirements of part 75 of this chapter for the year.

(ii) A unit's converted control period heat input for a calendar year specified under paragraph (a)(1)(ii) of this section equals:

(A) Except as provided in paragraph (a)(2)(ii)(B) or (C) of this section, the control period gross electrical output of the generator or generators served by the unit multiplied by 7,900 Btu/kWh, if the unit is coal-fired for the year, or 6,675 Btu/kWh, if the unit is not coal-fired for the year, and divided by 1,000,000 Btu/mmBtu, provided that if a generator is served by 2 or more units, then the gross electrical output of the generator will be attributed to each unit in proportion to the unit's share of the total control period heat input of such units for the year;

(B) For a unit that is a boiler and has equipment used to produce electricity and useful thermal energy for industrial, commercial, heating, or cooling purposes through the sequential use of energy, the total heat energy (in Btu) of the steam produced by the boiler during the control period, divided by 0.8 and by 1,000,000 Btu/mmBtu; or

(C) For a unit that is a combustion turbine and has equipment used to produce electricity and useful thermal energy for industrial, commercial, heating, or cooling purposes through the sequential use of energy, the control period gross electrical output of the enclosed device comprising the compressor, combustor, and turbine multiplied by 3,413 Btu/kWh, plus the total heat energy (in Btu) of the steam produced by any associated heat recovery steam generator during the control period divided by 0.8, and with the sum divided by 1,000,000 Btu/mmBtu.

(b)(1) For each control period in 2009 and thereafter, the permitting authority will allocate to all CAIR NO_X Ozone Season units in the State that have a baseline heat input (as determined under paragraph (a) of this section) a total amount of CAIR NO_X Ozone Season allowances equal to 95 percent for a control period during 2009 through 2014, and 97 percent for a control period during 2015 and thereafter, of the tons of NO_X emissions in the State trading budget under § 96.340 (except as provided in paragraph (d) of this section).

(2) The permitting authority will allocate CAIR NO_X Ozone Season allowances to each CAIR NO_X Ozone Season unit under paragraph (b)(1) of this section in an amount determined by multiplying the total amount of CAIR NO_X Ozone Season allowances allocated under paragraph (b)(1) of this section by the ratio of the baseline heat input of such CAIR NO_X Ozone Season unit to the total amount of baseline heat input of all such CAIR NO_X Ozone Season units in the State and rounding to the nearest whole allowance as appropriate.

(c) For each control period in 2009 and thereafter, the permitting authority will allocate CAIR NO_X Ozone Season allowances to CAIR NO_X Ozone Season units in a State that are not allocated CAIR NO_X Ozone Season allowances under paragraph (b) of this section because the units do not yet have a baseline heat input under paragraph (a) of this section or because the units have a baseline heat input but all CAIR NO_X Ozone Season allowances available under paragraph (b) of this section for the control period are already allocated, in accordance with the following procedures:

(1) The permitting authority will establish a separate new unit set-aside for each control period. Each new unit set-aside will be allocated CAIR NO_X Ozone Season allowances equal to 5 percent for a control period in2009 through 2014, and 3 percent for a control period in 2015 and thereafter, of

the amount of tons of NO_X emissions in the State trading budget under § 96.340.

(2) The CAIR designated representative of such a CAIR NO_X Ozone Season unit may submit to the permitting authority a request, in a format specified by the permitting authority, to be allocated CAIR NO_X Ozone Season allowances, starting with the later of the control period in 2009 or the first control period after the control period in which the CAIR NO_X Ozone Season unit commences commercial operation and until the first control period for which the unit is allocated CAIR NO_X Ozone Season allowances under paragraph (b) of this section. A separate CAIR NO_X Ozone Season allowance allocation request for each control period for which CAIR NO_X Ozone Season allowances are sought must be submitted on or before February 1 before such control period and after the date on which the CAIR NO_X Ozone Season unit commences commercial operation.

(3) In a CAIR NO_X Ozone Season allowance allocation request under paragraph (c)(2) of this section, the CAIR designated representative may request for a control period CAIR NO_X Ozone Season allowances in an amount not exceeding the CAIR NO_X Ozone Season unit's total tons of NO_X emissions during the control period immediately before such control period.

(4) The permitting authority will review each CAIR NO_X Ozone Season allowance allocation request under paragraph (c)(2) of this section and will allocate CAIR NO_X Ozone Season allowances for each control period pursuant to such request as follows:

(i) The permitting authority will accept an allowance allocation request only if the request meets, or is adjusted by the permitting authority as necessary to meet, the requirements of paragraphs (c)(2) and (3) of this section.

(ii) On or after February 1 before the control period, the permitting authority will determine the sum of the CAIR NO_X Ozone Season allowances requested (as adjusted under paragraph (c)(4)(i) of this section) in all allowance allocation requests accepted under paragraph (c)(4)(i) of this section for the control period.

(iii) If the amount of CAIR NO_X Ozone Season allowances in the new unit set-aside for the control period is greater than or equal to the sum under paragraph (c)(4)(ii) of this section, then the permitting authority will allocate the amount of CAIR NO_X Ozone Season allowances requested (as adjusted under paragraph (c)(4)(i) of this section) to each CAIR NO_X Ozone Season unit covered by an allowance allocation request accepted under paragraph (c)(4)(i) of this section.

(iv) If the amount of CAIR NO_X Ozone Season allowances in the new unit set-aside for the control period is less than the sum under paragraph (c)(4)(ii) of this section, then the permitting authority will allocate to each CAIR NO_X Ozone Season unit covered by an allowance allocation request accepted under paragraph (c)(4)(i) of this section the amount of the CAIR NO_X Ozone Season allowances requested (as adjusted under paragraph (c)(4)(i) of this section), multiplied by the amount of CAIR NO_X Ozone Season allowances in the new unit set-aside for the control period, divided by the sum determined under paragraph (c)(4)(ii) of this section, and rounded to the nearest whole allowance as appropriate.

(v) The permitting authority will notify each CAIR designated representative that submitted an allowance allocation request of the amount of CAIR NO_X Ozone Season allowances (if any) allocated for the control period to the CAIR NO_X Ozone Season unit covered by the request.

(d) If, after completion of the procedures under paragraph (c)(4) of this section for a control period, any unallocated CAIR NO_X Ozone Season allowances remain in the new unit set-aside for the control period, the permitting authority will allocate to each CAIR NO_X Ozone Season unit that was allocated CAIR NO_X Ozone Season allowances under paragraph (b) of this section an amount of CAIR NO_X Ozone Season allowances equal to the total amount of such remaining unallocated CAIR NO_X Ozone Season allowances, multiplied by the unit's allocation under paragraph (b) of this section, divided by 95 percent for a control period during 2009 through 2014, and 97 percent for a control period during 2015 and thereafter, of the amount of tons of NO_X emissions in the State trading

budget under § 96.340, and rounded to the nearest whole allowance as appropriate.

[70 FR 25382, May 12, 2005, as amended at 71 FR 25394, Apr. 28, 2006; 71 FR 74794, Dec. 13, 2006]

Subpart FFFF—CAIR NO_X Ozone Season Allowance Tracking System

SOURCE: 70 FR 25382, May 12, 2005, unless otherwise noted.

§ 96.350 [Reserved]

§ 96.351 Establishment of accounts.

(a) *Compliance accounts.* Except as provided in § 96.384(e), upon receipt of a complete certificate of representation under § 96.313, the Administrator will establish a compliance account for the CAIR NO_X Ozone Season source for which the certificate of representation was submitted, unless the source already has a compliance account.

(b) *General accounts*—(1) *Application for general account.* (i) Any person may apply to open a general account for the purpose of holding and transferring CAIR NO_X Ozone Season allowances. An application for a general account may designate one and only one CAIR authorized account representative and one and only one alternate CAIR authorized account representative who may act on behalf of the CAIR authorized account representative. The agreement by which the alternate CAIR authorized account representative is selected shall include a procedure for authorizing the alternate CAIR authorized account representative to act in lieu of the CAIR authorized account representative.

(ii) A complete application for a general account shall be submitted to the Administrator and shall include the following elements in a format prescribed by the Administrator:

(A) Name, mailing address, e-mail address (if any), telephone number, and facsimile transmission number (if any) of the CAIR authorized account representative and any alternate CAIR authorized account representative;

(B) Organization name and type of organization, if applicable;

(C) A list of all persons subject to a binding agreement for the CAIR authorized account representative and any alternate CAIR authorized account representative to represent their ownership interest with respect to the CAIR NO_X Ozone Season allowances held in the general account;

(D) The following certification statement by the CAIR authorized account representative and any alternate CAIR authorized account representative: ''I certify that I was selected as the CAIR authorized account representative or the alternate CAIR authorized account representative, as applicable, by an agreement that is binding on all persons who have an ownership interest with respect to CAIR NO_X Ozone Season allowances held in the general account. I certify that I have all the necessary authority to carry out my duties and responsibilities under the CAIR NO_X Ozone Season Trading Program on behalf of such persons and that each such person shall be fully bound by my representations, actions, inactions, or submissions and by any order or decision issued to me by the Administrator or a court regarding the general account.''

(E) The signature of the CAIR authorized account representative and any alternate CAIR authorized account representative and the dates signed.

(iii) Unless otherwise required by the permitting authority or the Administrator, documents of agreement referred to in the application for a general account shall not be submitted to the permitting authority or the Administrator. Neither the permitting authority nor the Administrator shall be under any obligation to review or evaluate the sufficiency of such documents, if submitted.

(2) *Authorization of CAIR authorized account representative andalternate CAIR authorized account representative.* (i) Upon receipt by the Administrator of a complete application for a general account under paragraph (b)(1) of this section:

(A) The Administrator will establish a general account for the person or persons for whom the application is submitted.

(B) The CAIR authorized account representative and any alternate CAIR authorized account representative for the general account shall represent and, by his or her representations, actions, inactions, or submissions, legally bind each person who has an ownership interest with respect to CAIR NO_X Ozone Season allowances held in the general account in all matters pertaining to the CAIR NO_X Ozone Season Trading Program, notwithstanding any agreement between the CAIR authorized account representative or any alternate CAIR authorized account representative and such person. Any such person shall be bound by any order or decision issued to the CAIR authorized account representative or any alternate CAIR authorized account representative by the Administrator or a court regarding the general account.

(C) Any representation, action, inaction, or submission by any alternate CAIR authorized account representative shall be deemed to be a representation, action, inaction, or submission by the CAIR authorized account representative.

(ii) Each submission concerning the general account shall be submitted, signed, and certified by the CAIR authorized account representative or any alternate CAIR authorized account representative for the persons having an ownership interest with respect to CAIR NO_X Ozone Season allowances held in the general account. Each such submission shall include the following certification statement by the CAIR authorized account representative or any alternate CAIR authorized account representative: ''I am authorized to make this submission on behalf of the persons having an ownership interest with respect to the CAIR NO_X Ozone Season allowances held in the general account. I certify under penalty of law that I have personally examined, and am familiar with, the statements and information submitted in this document and all its attachments. Based on my inquiry of those individuals with primary responsibility for obtaining the information, I certify that the statements and information are to the best of my knowledge and belief true, accurate, and complete. I am aware that there are significant penalties for submitting false statements and information or omitting required statements and information, including the possibility of fine or imprisonment.''

(iii) The Administrator will accept or act on a submission concerning the general account only if the submission has been made, signed, and certified in accordance with paragraph (b)(2)(ii) of this section.

(3) *Changing CAIR authorized account representative and alternate CAIR authorized account representative; changes in persons with ownership interest.* (i) The CAIR authorized account representative for a general account may be changed at any time upon receipt by the Administrator of a superseding complete application for a general account under paragraph (b)(1) of this section. Notwithstanding any such change, all representations, actions, inactions, and submissions by the previous CAIR authorized account representative before the time and date when the Administrator receives the superseding application for a general account shall be binding on the new CAIR authorized account representative and the persons with an ownership interest with respect to the CAIR NO_X Ozone Season allowances in the general account.

(ii) The alternate CAIR authorized account representative for a general account may be changed at any time upon receipt by the Administrator of a superseding complete application for a general account under paragraph (b)(1) of this section. Notwithstanding any such change, all representations, actions, inactions, and submissions by the previous alternate CAIR authorized account representative before the time and date when the Administrator receives the superseding application for a general account shall be binding on the new alternate CAIR authorized account representative and the persons with an ownership interest with respect to the CAIR NO_X Ozone Season allowances in the general account.

(iii)(A) In the event a person having an ownership interest with respect to CAIR NO_X Ozone Season allowances in the general account is not included in the list of such persons in the application for a general account, such person shall be deemed to be subject to and

bound by the application for a general account, the representation, actions, inactions, and submissions of the CAIR authorized account representative and any alternate CAIR authorized account representative of the account, and the decisions and orders of the Administrator or a court, as if the person were included in such list.

(B) Within 30 days following any change in the persons having an ownership interest with respect to CAIR NO_X Ozone Season allowances in the general account, including the addition of a new person, the CAIR authorized account representative or any alternate CAIR authorized account representative shall submit a revision to the application for a general account amending the list of persons having an ownership interest with respect to the CAIR NO_X Ozone Season allowances in the general account to include the change.

(4) *Objections concerning CAIR authorized account representative and alternate CAIR authorized account representative.* (i) Once a complete application for a general account under paragraph (b)(1) of this section has been submitted and received, the Administrator will rely on the application unless and until a superseding complete application for a general account under paragraph (b)(1) of this section is received by the Administrator.

(ii) Except as provided in paragraph (b)(3)(i) or (ii) of this section, no objection or other communication submitted to the Administrator concerning the authorization, or any representation, action, inaction, or submission of the CAIR authorized account representative or any alternate CAIR authorized account representative for a general account shall affect any representation, action, inaction, or submission of the CAIR authorized account representative or any alternative CAIR authorized account representative or the finality of any decision or order by the Administrator under the CAIR NO_X Ozone Season Trading Program.

(iii) The Administrator will not adjudicate any private legal dispute concerning the authorization or any representation, action, inaction, or submission of the CAIR authorized account representative or any alternate CAIR authorized account representative for a general account, including private legal disputes concerning the proceeds of CAIR NO_X Ozone Season allowance transfers.

(c) *Account identification.* The Administrator will assign a unique identifying number to each account established under paragraph (a) or (b) of this section.

(5) *Delegation by CAIR authorized account representative and alternate CAIR authorized account representative.* (i) A CAIR authorized account representative may delegate, to one or more natural persons, his or her authority to make an electronic submission to the Administrator provided for or required under subparts FFFF and GGGG of this part.

(ii) An alternate CAIR authorized account representative may delegate, to one or more natural persons, his or her authority to make an electronic submission to the Administrator provided for or required under subparts FFFF and GGGG of this part.

(iii) In order to delegate authority to make an electronic submission to the Administrator in accordance with paragraph (b)(5)(i) or (ii) of this section, the CAIR authorized account representative or alternate CAIR authorized account representative, as appropriate, must submit to the Administrator a notice of delegation, in a format prescribed by the Administrator, that includes the following elements:

(A) The name, address, e-mail address, telephone number, and facsimile transmission number (if any) of such CAIR authorized account representative or alternate CAIR authorized account representative;

(B) The name, address, e-mail address, telephone number, and, facsimile transmission number (if any) of each such natural person (referred to as an ''agent'');

(C) For each such natural person, a list of the type or types of electronic submissions under paragraph (b)(5)(i) or (ii) of this section for which authority is delegated to him or her;

(D) The following certification statement by such CAIR authorized account representative or alternate CAIR authorized account representative: ''I agree that any electronic submission

to the Administrator that is by an agent identified in this notice of delegation and of a type listed for such agent in this notice of delegation and that is made when I am a CAIR authorized account representative or alternate CAIR authorized representative, as appropriate, and before this notice of delegation is superseded by another notice of delegation under 40 CFR 96.351(b)(5)(iv) shall be deemed to be an electronic submission by me.''; and

(E) The following certification statement by such CAIR authorized account representative or alternate CAIR authorized account representative: ''Until this notice of delegation is superseded by another notice of delegation under 40 CFR 96.351(b)(5)(iv), I agree to maintain an e-mail account and to notify the Administrator immediately of any change in my e-mail address unless all delegation of authority by me under 40 CFR 96.351(b)(5) is terminated.''.

(iv) A notice of delegation submitted under paragraph (b)(5)(iii) of this section shall be effective, with regard to the CAIR authorized account representative or alternate CAIR authorized account representative identified in such notice, upon receipt of such notice by the Administrator and until receipt by the Administrator of a superseding notice of delegation submitted by such CAIR authorized account representative or alternate CAIR authorized account representative, as appropriate. The superseding notice of delegation may replace any previously identified agent, add a new agent, or eliminate entirely any delegation of authority.

(v) Any electronic submission covered by the certification in paragraph (b)(5)(iii)(D) of this section and made in accordance with a notice of delegation effective under paragraph (b)(5)(iv) of this section shall be deemed to be an electronic submission by the CAIR designated representative or alternate CAIR designated representative submitting such notice of delegation.

[70 FR 25382, May 12, 2005, as amended at 71 FR 25394, Apr. 28, 2006; 71 FR 74794, Dec. 13, 2006]

§ 96.352 Responsibilities of CAIR authorized account representative.

Following the establishment of a CAIR NO_X Ozone Season Allowance Tracking System account, all submissions to the Administrator pertaining to the account, including, but not limited to, submissions concerning the deduction or transfer of CAIR NO_X Ozone Season allowances in the account, shall be made only by the CAIR authorized account representative for the account.

§ 96.353 Recordation of CAIR NO_X Ozone Season allowance allocations.

(a) By September 30, 2007, the Administrator will record in the CAIR NO_X Ozone Season source's compliance account the CAIR NO_X Ozone Season allowances allocated for the CAIR NO_X Ozone Season units at the source, as submitted by the permitting authority in accordance with § 96.341(a), for the control periods in 2009, 2010, 2011, 2012, 2013, and 2014.

(b) By December 1, 2009, the Administrator will record in the CAIR NO_X Ozone Season source's compliance account the CAIR NO_X Ozone Season allowances allocated for the CAIR NO_X Ozone Season units at the source, as submitted by the permitting authority in accordance with § 96.341(b), for the control period in 2015.

(c) By December 1, 2010 and December 1 of each year thereafter, the Administrator will record in the CAIR NO_X Ozone Season source's compliance account the CAIR NO_X Ozone Season allowances allocated for the CAIR NO_X Ozone Season units at the source, as submitted by the permitting authority in accordance with § 96.341(b), for the control period in the sixth year after the year of the applicable deadline for recordation under this paragraph.

(d) By September 1, 2009 and September 1 of each year thereafter, the Administrator will record in the CAIR NO_X Ozone Season source's compliance account the CAIR NO_X Ozone Season allowances allocated for the CAIR NO_X Ozone Season units at the source, as submitted by the permitting authority or determined by the Administrator in accordance with § 96.341(c), for the control period in the year of the applicable

deadline for recordation under this paragraph.

(e) *Serial numbers for allocated CAIR NO_X Ozone Season allowances.* When recording the allocation of CAIR NO_X Ozone Season allowances for a CAIR NO_X Ozone Season unit in a compliance account, the Administrator will assign each CAIR NO_X Ozone Season allowance a unique identification number that will include digits identifying the year of the control period for which the CAIR NO_X Ozone Season allowance is allocated.

[70 FR 25382, May 12, 2005, as amended at 71 FR 25394, Apr. 28, 2006]

EDITORIAL NOTE: At 71 FR 25395, Apr. 28, 2006, § 96.353(d) was amended; however, the amendment could not be incorporated due to inaccurate amendatory instruction.

§ 96.354 Compliance with CAIR NO_X emissions limitation.

(a) *Allowance transfer deadline.* The CAIR NO_X Ozone Season allowances are available to be deducted for compliance with a source's CAIR NO_X Ozone Season emissions limitation for a control period in a given calendar year only if the CAIR NO_X Ozone Season allowances:

(1) Were allocated for the control period in the year or a prior year; and

(2) Are held in the compliance account as of the allowance transfer deadline for the control period or are transferred into the compliance account by a CAIR NO_X Ozone Season allowance transfer correctly submitted for recordation under §§ 96.360 and 96.361 by the allowance transfer deadline for the control period.

(c)(1) *Identification of CAIR NO* x *Ozone Season allowances by serial number.* The CAIR authorized account representative for a source's compliance account may request that specific CAIR NO_X Ozone Season allowances, identified by serial number, in the compliance account be deducted for emissions or excess emissions for a control period in accordance with paragraph (b) or (d) of this section. Such request shall be submitted to the Administrator by the allowance transfer deadline for the control period and include, in a format prescribed by the Administrator, the identification of the CAIR NO_X Ozone Season source and the appropriate serial numbers.

(2) *First-in, first-out.* The Administrator will deduct CAIR NO_X Ozone Season allowances under paragraph (b) or (d) of this section from the source's compliance account, in the absence of an identification or in the case of a partial identification of CAIR NO_X Ozone Season allowances by serial number under paragraph (c)(1) of this section, on a first-in, first-out (FIFO) accounting basis in the following order:

(i) Any CAIR NO_X Ozone Season allowances that were allocated to the units at the source, in the order of recordation; and then

(ii) Any CAIR NO_X Ozone Season allowances that were allocated to any entity and transferred and recorded in the compliance account pursuant to subpart GGGG of this part, in the order of recordation.

(d) *Deductions for excess emissions.* (1) After making the deductions for compliance under paragraph (b) of this section for a control period in a calendar year in which the CAIR NO_X Ozone Season source has excess emissions, the Administrator will deduct from the source's compliance account an amount of CAIR NO_X Ozone Season allowances, allocated for the control period in the immediately following calendar year, equal to 3 times the number of tons of the source's excess emissions.

(2) Any allowance deduction required under paragraph (d)(1) of this section shall not affect the liability of the owners and operators of the CAIR NO_X Ozone Season source or the CAIR NO_X Ozone Season units at the source for any fine, penalty, or assessment, or their obligation to comply with any other remedy, for the same violations, as ordered under the Clean Air Act or applicable State law.

(e) *Recordation of deductions.* The Administrator will record in the appropriate compliance account all deductions from such an account under paragraphs (b) and (d) of this section and subpart IIII.

(f) *Administrator's action on submissions.* (1) The Administrator may review and conduct independent audits concerning any submission under the

CAIR NO_X Ozone Season Trading Program and make appropriate adjustments of the information in the submissions.

(2) The Administrator may deduct CAIR NO_X Ozone Season allowances from or transfer CAIR NO_X Ozone Season allowances to a source's compliance account based on the information in the submissions, as adjusted under paragraph (f)(1) of this section, and record such deductions and transfers.

[70 FR 25382, May 12, 2005, as amended at 71 FR 25395, Apr. 28, 2006]

§ 96.355 Banking.

(a) CAIR NO_X Ozone Season allowances may be banked for future use or transfer in a compliance account or a general account in accordance with paragraph (b) of this section.

(b) Any CAIR NO_X Ozone Season allowance that is held in a compliance account or a general account will remain in such account unless and until the CAIR NO_X Ozone Season allowance is deducted or transferred under § 96.354, § 96.356, or subpart GG of this part.

[70 FR 25382, May 12, 2005, as amended at 71 FR 25395, Apr. 28, 2006]

EDITORIAL NOTE: At 71 FR 25395, Apr. 28, 2006, § 96.355 was amended; however, the amendment could not be incorporated due to inaccurate amendatory instruction.

§ 96.356 Account error.

The Administrator may, at his or her sole discretion and on his or her own motion, correct any error in any CAIR NO_X Ozone Season Allowance Tracking System account. Within 10 business days of making such correction, the Administrator will notify the CAIR authorized account representative for the account.

§ 96.357 Closing of general accounts.

(a) The CAIR authorized account representative of a general account may submit to the Administrator a request to close the account, which shall include a correctly submitted allowance transfer under §§ 96.360 and 96.361 for any CAIR NO_X Ozone Season allowances in the account to one or more other CAIR NO_X Ozone Season Allowance Tracking System accounts.

(b) If a general account has no allowance transfers in or out of the account for a 12-month period or longer and does not contain any CAIR NO_X Ozone Season allowances, the Administrator may notify the CAIR authorized account representative for the account that the account will be closed following 20 business days after the notice is sent. The account will be closed after the 20-day period unless, before the end of the 20-day period, the Administrator receives a correctly submitted transfer of CAIR NO_X Ozone Season allowances into the account under §§ 96.360 and 96.361 or a statement submitted by the CAIR authorized account representative demonstrating to the satisfaction of the Administrator good cause as to why the account should not be closed.

[70 FR 25382, May 12, 2005, as amended at 71 FR 25395, Apr. 28, 2006]

Subpart GGGG—CAIR NO_X Ozone Season Allowance Transfers

SOURCE: 70 FR 25382, May 12, 2005, unless otherwise noted.

§ 96.360 Submission of CAIR NO_X Ozone Season allowance transfers.

A CAIR authorized account representative seeking recordation of a CAIR NO_X Ozone Season allowance transfer shall submit the transfer to the Administrator. To be considered correctly submitted, the CAIR NO_X Ozone Season allowance transfer shall include the following elements, in a format specified by the Administrator:

(a) The account numbers for both the transferor and transferee accounts;

(b) The serial number of each CAIR NO_X Ozone Season allowance that is in the transferor account and is to be transferred; and

(c) The name and signature of the CAIR authorized account representative of the transferor account and the date signed.

§ 96.361 EPA recordation.

(a) Within 5 business days (except as provided in paragraph (b) of this section) of receiving a CAIR NO_X Ozone Season allowance transfer, the Administrator will record a CAIR NO_X Ozone Season allowance transfer by moving

each CAIR NO_X Ozone Season allowance from the transferor account to the transferee account as specified by the request, provided that:

(1) The transfer is correctly submitted under § 96.360; and

(2) The transferor account includes each CAIR NO_X Ozone Season allowance identified by serial number in the transfer.

(b) A CAIR NO_X Ozone Season allowance transfer that is submitted for recordation after the allowance transfer deadline for a control period and that includes any CAIR NO_X Ozone Season allowances allocated for any control period before such allowance transfer deadline will not be recorded until after the Administrator completes the deductions under § 96.354 for the control period immediately before such allowance transfer deadline.

(c) Where a CAIR NO_X Ozone Season allowance transfer submitted for recordation fails to meet the requirements of paragraph (a) of this section, the Administrator will not record such transfer.

§ 96.362 Notification.

(a) *Notification of recordation.* Within 5 business days of recordation of a CAIR NO_X Ozone Season allowance transfer under § 96.361, the Administrator will notify the CAIR authorized account representatives of both the transferor and transferee accounts.

(b) *Notification of non-recordation.* Within 10 business days of receipt of a CAIR NO_X Ozone Season allowance transfer that fails to meet the requirements of § 96.361(a), the Administrator will notify the CAIR authorized account representatives of both accounts subject to the transfer of:

(1) A decision not to record the transfer, and

(2) The reasons for such non-recordation.

(c) Nothing in this section shall preclude the submission of a CAIR NO_X Ozone Season allowance transfer for recordation following notification of non-recordation.

Subpart HHHH—Monitoring and Reporting

SOURCE: 70 FR 25382, May 12, 2005, unless otherwise noted.

§ 96.370 General requirements.

The owners and operators, and to the extent applicable, the CAIR designated representative, of a CAIR NO_X Ozone Season unit, shall comply with the monitoring, recordkeeping, and reporting requirements as provided in this subpart and in subpart H of part 75 of this chapter. For purposes of complying with such requirements, the definitions in § 96.302 and in § 72.2 of this chapter shall apply, and the terms ''affected unit,'' ''designated representative,'' and ''continuous emission monitoring system'' (or ''CEMS'') in part 75 of this chapter shall be deemed to refer to the terms ''CAIR NO_X Ozone Season unit,'' ''CAIR designated representative,'' and ''continuous emission monitoring system'' (or ''CEMS'') respectively, as defined in § 96.302. The owner or operator of a unit that is not a CAIR NO_X Ozone Season unit but that is monitored under § 75.72(b)(2)(ii) of this chapter shall comply with the same monitoring, recordkeeping, and reporting requirements as a CAIR NO_X Ozone Season unit.

(a) *Requirements for installation, certification, and data accounting.* The owner or operator of each CAIR NO_X Ozone Season unit shall:

(1) Install all monitoring systems required under this subpart for monitoring NO_X mass emissions and individual unit heat input (including all systems required to monitor NO_X emission rate, NO_X concentration, stack gas moisture content, stack gas flow rate, CO_2 or O_2 concentration, and fuel flow rate, as applicable, in accordance with §§ 75.71 and 75.72 of this chapter);

(2) Successfully complete all certification tests required under § 96.371 and meet all other requirements of this subpart and part 75 of this chapter applicable to the monitoring systems under paragraph (a)(1) of this section; and

(3) Record, report, and quality-assure the data from the monitoring systems under paragraph (a)(1) of this section.

(b) *Compliance deadlines.* Except as provided in paragraph (e) of this section, the owner or operator shall meet the monitoring system certification and other requirements of paragraphs (a)(1) and (2) of this section on or before the following dates. The owner or operator shall record, report, and quality-assure the data from the monitoring systems under paragraph (a)(1) of this section on and after the following dates.

(1) For the owner or operator of a CAIR NO_X Ozone Season unit that commences commercial operation before July 1, 2007, by May 1, 2008.

(2) For the owner or operator of a CAIR NO_X Ozone Season unit that commences commercial operation on or after July 1, 2007 and that reports on an annual basis under § 96.374(d), by the later of the following dates:

(i) 90 unit operating days or 180 calendar days, whichever occurs first, after the date on which the unit commences commercial operation; or

(ii) May 1, 2008.

(3) For the owner or operator of a CAIR NO_X Ozone Season unit that commences commercial operation on or after July 1, 2007 and that reports on a control period basis under § 96.374(d)(2)(ii), by the later of the following dates:

(i) 90 unit operating days or 180 calendar days, whichever occurs first, after the date on which the unit commences commercial operation; or

(ii) If the compliance date under paragraph (b)(3)(i) of this section is not during a control period, May 1 immediately following the compliance date under paragraph (b)(3)(i) of this section.

(4) For the owner or operator of a CAIR NO_X Ozone Season unit for which construction of a new stack or flue or installation of add-on NO_X emission controls is completed after the applicable deadline under paragraph (b)(1), (2), (6), or (7) of this section and that reports on an annual basis under § 96.374(d), by 90 unit operating days or 180 calendar days, whichever occurs first, after the date on which emissions first exit to the atmosphere through the new stack or flue or add-on NO_X emissions controls.

(5) For the owner or operator of a CAIR NO_X Ozone Season unit for which construction of a new stack or flue or installation of add-on NO_X emission controls is completed after the applicable deadline under paragraph (b)(1), (3), (6), or (7) of this section and that reports on a control period basis under § 96.374(d)(2)(ii), by the later of the following dates:

(i) 90 unit operating days or 180 calendar days, whichever occurs first, after the date on which emissions first exit to the atmosphere through the new stack or flue or add-on NO_X emissions controls; or

(ii) If the compliance date under paragraph (b)(5)(i) of this section is not during a control period, May 1 immediately following the compliance date under paragraph (b)(5)(i) of this section.

(6) Notwithstanding the dates in paragraphs (b)(1), (2), and (3) of this section, for the owner or operator of a unit for which a CAIR NO_X Ozone Season opt-in permit application is submitted and not withdrawn and a CAIR opt-in permit is not yet issued or denied under subpart IIII of this part, by the date specified in § 96.384(b).

(7) Notwithstanding the dates in paragraphs (b)(1), (2), and (3) of this section, for the owner or operator of a CAIR NO_X Ozone Season opt-in unit, by the date on which the CAIR NO_X Ozone Season opt-in unit under subpart IIII of this part enters the CAIR NO_X Ozone Season Trading Program as provided in § 96.384(g).

(c) *Reporting data.* The owner or operator of a CAIR NO_X Ozone Season unit that does not meet the applicable compliance date set forth in paragraph (b) of this section for any monitoring system under paragraph (a)(1) of this section shall, for each such monitoring system, determine, record, and report maximum potential (or, as appropriate, minimum potential) values for NO_X concentration, NO_X emission rate, stack gas flow rate, stack gas moisture content, fuel flow rate, and any other parameters required to determine NO_X mass emissions and heat input in accordance with § 75.31(b)(2) or (c)(3) of this chapter, section 2.4 of appendix D to part 75 of this chapter, or section 2.5

of appendix E to part 75 of this chapter, as applicable.

(d) *Prohibitions.* (1) No owner or operator of a CAIR NO_X Ozone Season unit shall use any alternative monitoring system, alternative reference method, or any other alternative to any requirement of this subpart without having obtained prior written approval in accordance with § 96.375.

(2) No owner or operator of a CAIR NO_X Ozone Season unit shall operate the unit so as to discharge, or allow to be discharged, NO_X emissions to the atmosphere without accounting for all such emissions in accordance with the applicable provisions of this subpart and part 75 of this chapter.

(3) No owner or operator of a CAIR NO_X Ozone Season unit shall disrupt the continuous emission monitoring system, any portion thereof, or any other approved emission monitoring method, and thereby avoid monitoring and recording NO_X mass emissions discharged into the atmosphere or heat input, except for periods of recertification or periods when calibration, quality assurance testing, or maintenance is performed in accordance with the applicable provisions of this subpart and part 75 of this chapter.

(4) No owner or operator of a CAIR NO_X Ozone Season unit shall retire or permanently discontinue use of the continuous emission monitoring system, any component thereof, or any other approved monitoring system under this subpart, except under any one of the following circumstances:

(i) During the period that the unit is covered by an exemption under § 96.305 that is in effect;

(ii) The owner or operator is monitoring emissions from the unit with another certified monitoring system approved, in accordance with the applicable provisions of this subpart and part 75 of this chapter, by the permitting authority for use at that unit that provides emission data for the same pollutant or parameter as the retired or discontinued monitoring system; or

(iii) The CAIR designated representative submits notification of the date of certification testing of a replacement monitoring system for the retired or discontinued monitoring system in accordance with § 96.371(d)(3)(i).

(e) *Long-term cold storage.* The owner or operator of a CAIR NO_X Ozone Season unit is subject to the applicable provisions of part 75 of this chapter concerning units in long-term cold storage.

[70 FR 25382, May 12, 2005, as amended at 71 FR 25395, Apr. 28, 2006]

§ 96.371 Initial certification and recertification procedures.

(a) The owner or operator of a CAIR NO_X Ozone Season unit shall be exempt from the initial certification requirements of this section for a monitoring system under § 96.370(a)(1) if the following conditions are met:

(1) The monitoring system has been previously certified in accordance with part 75 of this chapter; and

(2) The applicable quality-assurance and quality-control requirements of § 75.21 of this chapter and appendix B, appendix D, and appendix E to part 75 of this chapter are fully met for the certified monitoring system described in paragraph (a)(1) of this section.

(b) The recertification provisions of this section shall apply to a monitoring system under § 96.370(a)(1) exempt from initial certification requirements under paragraph (a) of this section.

(c) If the Administrator has previously approved a petition under § 75.17(a) or (b) of this chapter for apportioning the NO_X emission rate measured in a common stack or a petition under § 75.66 of this chapter for an alternative to a requirement in § 75.12 or § 75.17 of this chapter, the CAIR designated representative shall resubmit the petition to the Administrator under § 96.375(a) to determine whether the approval applies under the CAIR NO_X Ozone Season Trading Program.

(d) Except as provided in paragraph (a) of this section, the owner or operator of a CAIR NO_X Ozone Season unit shall comply with the following initial certification and recertification procedures for a continuous monitoring system (i.e., a continuous emission monitoring system and an excepted monitoring system under appendices D and E to part 75 of this chapter) under § 96.370(a)(1). The owner or operator of a unit that qualifies to use the low mass

emissions excepted monitoring methodology under § 75.19 of this chapter or that qualifies to use an alternative monitoring system under subpart E of part 75 of this chapter shall comply with the procedures in paragraph (e) or (f) of this section respectively.

(1) *Requirements for initial certification.* The owner or operator shall ensure that each continuous monitoring system under § 96.370(a)(1)(including the automated data acquisition and handling system) successfully completes all of the initial certification testing required under § 75.20 of this chapter by the applicable deadline in § 96.370(b). In addition, whenever the owner or operator installs a monitoring system to meet the requirements of this subpart in a location where no such monitoring system was previously installed, initial certification in accordance with § 75.20 of this chapter is required.

(2) *Requirements for recertification.* Whenever the owner or operator makes a replacement, modification, or change in any certified continuous emission monitoring system under § 96.370(a)(1) that may significantly affect the ability of the system to accurately measure or record NO_X mass emissions or heat input rate or to meet the quality-assurance and quality-control requirements of § 75.21 of this chapter or appendix B to part 75 of this chapter, the owner or operator shall recertify the monitoring system in accordance with § 75.20(b) of this chapter. Furthermore, whenever the owner or operator makes a replacement, modification, or change to the flue gas handling system or the unit's operation that may significantly change the stack flow or concentration profile, the owner or operator shall recertify each continuous emission monitoring system whose accuracy is potentially affected by the change, in accordance with § 75.20(b) of this chapter. Examples of changes to a continuous emission monitoring system that require recertification include: replacement of the analyzer, complete replacement of an existing continuous emission monitoring system, or change in location or orientation of the sampling probe or site. Any fuel flowmeter systems, and any excepted NO_X monitoring system under appendix E to part 75 of this chapter, under § 96.370(a)(1) are subject to the recertification requirements in § 75.20(g)(6) of this chapter.

(3) *Approval process for initial certification and recertification.* Paragraphs (d)(3)(i) through (iv) of this section apply to both initial certification and recertification of a continuous monitoring system under § 96.370(a)(1). For recertifications, replace the words ''certification'' and ''initial certification'' with the word ''recertification'', replace the word ''certified'' with the word ''recertified,'' and follow the procedures in §§ 75.20(b)(5) and (g)(7) of this chapter in lieu of the procedures in paragraph (d)(3)(v) of this section.

(i) *Notification of certification.* The CAIR designated representative shall submit to the permitting authority, the appropriate EPA Regional Office, and the Administrator written notice of the dates of certification testing, in accordance with § 96.373.

(ii) *Certification application.* The CAIR designated representative shall submit to the permitting authority a certification application for each monitoring system. A complete certification application shall include the information specified in § 75.63 of this chapter.

(iii) *Provisional certification date.* The provisional certification date for a monitoring system shall be determined in accordance with § 75.20(a)(3) of this chapter. A provisionally certified monitoring system may be used under the CAIR NO_X Ozone Season Trading Program for a period not to exceed 120 days after receipt by the permitting authority of the complete certification application for the monitoring system under paragraph (d)(3)(ii) of this section. Data measured and recorded by the provisionally certified monitoring system, in accordance with the requirements of part 75 of this chapter, will be considered valid quality-assured data (retroactive to the date and time of provisional certification), provided that the permitting authority does not invalidate the provisional certification by issuing a notice of disapproval within 120 days of the date of receipt of the complete certification application by the permitting authority.

(iv) *Certification application approval process.* The permitting authority will issue a written notice of approval or

disapproval of the certification application to the owner or operator within 120 days of receipt of the complete certification application under paragraph (d)(3)(ii) of this section. In the event the permitting authority does not issue such a notice within such 120-day period, each monitoring system that meets the applicable performance requirements of part 75 of this chapter and is included in the certification application will be deemed certified for use under the CAIR NO_X Ozone Season Trading Program.

(A) *Approval notice.* If the certification application is complete and shows that each monitoring system meets the applicable performance requirements of part 75 of this chapter, then the permitting authority will issue a written notice of approval of the certification application within 120 days of receipt.

(B) *Incomplete application notice.* If the certification application is not complete, then the permitting authority will issue a written notice of incompleteness that sets a reasonable date by which the CAIR designated representative must submit the additional information required to complete the certification application. If the CAIR designated representative does not comply with the notice of incompleteness by the specified date, then the permitting authority may issue a notice of disapproval under paragraph (d)(3)(iv)(C) of this section. The 120-day review period shall not begin before receipt of a complete certification application.

(C) *Disapproval notice.* If the certification application shows that any monitoring system does not meet the performance requirements of part 75 of this chapter or if the certification application is incomplete and the requirement for disapproval under paragraph (d)(3)(iv)(B) of this section is met, then the permitting authority will issue a written notice of disapproval of the certification application. Upon issuance of such notice of disapproval, the provisional certification is invalidated by the permitting authority and the data measured and recorded by each uncertified monitoring system shall not be considered valid quality-assured data beginning with the date and hour of provisional certification (as defined under § 75.20(a)(3) of this chapter). The owner or operator shall follow the procedures for loss of certification in paragraph (d)(3)(v) of this section for each monitoring system that is disapproved for initial certification.

(D) *Audit decertification.* The permitting authority or, for a CAIR NO_X Ozone Season opt-in unit or a unit for which a CAIR opt-in permit application is submitted and not withdrawn and a CAIR opt-in permit is not yet issued or denied under subpart IIII of this part, the Administrator may issue a notice of disapproval of the certification status of a monitor in accordance with § 96.372(b).

(v) *Procedures for loss of certification.* If the permitting authority or the Administrator issues a notice of disapproval of a certification application under paragraph (d)(3)(iv)(C) of this section or a notice of disapproval of certification status under paragraph (d)(3)(iv)(D) of this section, then:

(A) The owner or operator shall substitute the following values, for each disapproved monitoring system, for each hour of unit operation during the period of invalid data specified under § 75.20(a)(4)(iii), § 75.20(g)(7), or § 75.21(e) of this chapter and continuing until the applicable date and hour specified under § 75.20(a)(5)(i) or (g)(7) of this chapter:

(*1*) For a disapproved NO_X emission rate (*i.e.*, NO_X-diluent) system, the maximum potential NO_X emission rate, as defined in § 72.2 of this chapter.

(*2*) For a disapproved NO_X pollutant concentration monitor and disapproved flow monitor, respectively, the maximum potential concentration of NO_X and the maximum potential flow rate, as defined in sections 2.1.2.1 and 2.1.4.1 of appendix A to part 75 of this chapter.

(*3*) For a disapproved moisture monitoring system and disapproved diluent gas monitoring system, respectively, the minimum potential moisture percentage and either the maximum potential CO_2 concentration or the minimum potential O_2 concentration (as applicable), as defined in sections 2.1.5, 2.1.3.1, and 2.1.3.2 of appendix A to part 75 of this chapter.

(*4*) For a disapproved fuel flowmeter system, the maximum potential fuel flow rate, as defined in section 2.4.2.1 of appendix D to part 75 of this chapter.

(*5*) For a disapproved excepted NO_X monitoring system under appendix E to part 75 of this chapter, the fuel-specific maximum potential NO_X emission rate, as defined in § 72.2 of this chapter.

(B) The CAIR designated representative shall submit a notification of certification retest dates and a new certification application in accordance with paragraphs (d)(3)(i) and (ii) of this section.

(C) The owner or operator shall repeat all certification tests or other requirements that were failed by the monitoring system, as indicated in the permitting authority's or the Administrator's notice of disapproval, no later than 30 unit operating days after the date of issuance of the notice of disapproval.

(e) *Initial certification and recertification procedures for units using the low mass emission excepted methodology under § 75.19 of this chapter*. The owner or operator of a unit qualified to use the low mass emissions (LME) excepted methodology under § 75.19 of this chapter shall meet the applicable certification and recertification requirements in §§ 75.19(a)(2) and 75.20(h) of this chapter. If the owner or operator of such a unit elects to certify a fuel flowmeter system for heat input determination, the owner or operator shall also meet the certification and recertification requirements in § 75.20(g) of this chapter.

(f) *Certification/recertification procedures for alternative monitoring systems*. The CAIR designated representative of each unit for which the owner or operator intends to use an alternative monitoring system approved by the Administrator and, if applicable, the permitting authority under subpart E of part 75 of this chapter shall comply with the applicable notification and application procedures of § 75.20(f) of this chapter.

[70 FR 25382, May 12, 2005, as amended at 71 FR 25395, Apr. 28, 2006; 71 FR 74794, Dec. 13, 2006]

§ 96.372 Out of control periods.

(a) Whenever any monitoring system fails to meet the quality-assurance and quality-control requirements or data validation requirements of part 75 of this chapter, data shall be substituted using the applicable missing data procedures in subpart D or subpart H of, or appendix D or appendix E to, part 75 of this chapter.

(b) *Audit decertification*. Whenever both an audit of a monitoring system and a review of the initial certification or recertification application reveal that any monitoring system should not have been certified or recertified because it did not meet a particular performance specification or other requirement under § 96.371 or the applicable provisions of part 75 of this chapter, both at the time of the initial certification or recertification application submission and at the time of the audit, the permitting authority or, for a CAIR NO_X Ozone Season opt-in unit or a unit for which a CAIR opt-in permit application is submitted and not withdrawn and a CAIR opt-in permit is not yet issued or denied under subpart IIII of this part, the Administrator will issue a notice of disapproval of the certification status of such monitoring system. For the purposes of this paragraph, an audit shall be either a field audit or an audit of any information submitted to the permitting authority or the Administrator. By issuing the notice of disapproval, the permitting authority or the Administrator revokes prospectively the certification status of the monitoring system. The data measured and recorded by the monitoring system shall not be considered valid quality-assured data from the date of issuance of the notification of the revoked certification status until the date and time that the owner or operator completes subsequently approved initial certification or recertification tests for the monitoring system. The owner or operator shall follow the applicable initial certification or recertification procedures in § 96.371 for each disapproved monitoring system.

§ 96.373 Notifications.

The CAIR designated representative for a CAIR NO_X Ozone Season unit

shall submit written notice to the permitting authority and the Administrator in accordance with § 75.61 of this chapter.

[70 FR 25382, May 12, 2005, as amended at 71 FR 25395, Apr. 28, 2006]

§ 96.374 Recordkeeping and reporting.

(a) *General provisions.* The CAIR designated representative shall comply with all recordkeeping and reporting requirements in this section, the applicable recordkeeping and reporting requirements under § 75.73 of this chapter, and the requirements of § 96.310(e)(1).

(b) *Monitoring plans.* The owner or operator of a CAIR NO_X Ozone Season unit shall comply with requirements of § 75.73(c) and (e) of this chapter and, for a unit for which a CAIR opt-in permit application is submitted and not withdrawn and a CAIR opt-in permit is not yet issued or denied under subpart IIII of this part, §§ 96.383 and 96.384(a).

(c) *Certification applications.* The CAIR designated representative shall submit an application to the permitting authority within 45 days after completing all initial certification or recertification tests required under § 96.371, including the information required under § 75.63 of this chapter.

(d) *Quarterly reports.* The CAIR designated representative shall submit quarterly reports, as follows:

(1) If the CAIR NO_X Ozone Season unit is subject to an Acid Rain emissions limitation or a CAIR NO_X emissions limitation or if the owner or operator of such unit chooses to report on an annual basis under this subpart, the CAIR designated representative shall meet the requirements of subpart H of part 75 of this chapter (concerning monitoring of NO_X mass emissions) for such unit for the entire year and shall report the NO_X mass emissions data and heat input data for such unit, in an electronic quarterly report in a format prescribed by the Administrator, for each calendar quarter beginning with:

(i) For a unit that commences commercial operation before July 1, 2007, the calendar quarter covering May 1, 2008 through June 30, 2008;

(ii) For a unit that commences commercial operation on or after July 1, 2007, the calendar quarter corresponding to the earlier of the date of provisional certification or the applicable deadline for initial certification under § 96.370(b), unless that quarter is the third or fourth quarter of 2007 or the first quarter of 2008, in which case reporting shall commence in the quarter covering May 1, 2008 through June 30, 2008;

(iii) Notwithstanding paragraphs (d)(1)(i) and (ii) of this section, for a unit for which a CAIR opt-in permit application is submitted and not withdrawn and a CAIR opt-in permit is not yet issued or denied under subpart IIII of this part, the calendar quarter corresponding to the date specified in § 96.384(b); and

(iv) Notwithstanding paragraphs (d)(1)(i) and (ii) of this section, for a CAIR NO_X Ozone Season opt-in unit under subpart IIII of this part, the calendar quarter corresponding to the date on which the CAIR NO_X Ozone Season opt-in unit enters the CAIR NO_X Ozone Season Trading Program as provided in § 96.384(g).

(2) If the CAIR NO_X Ozone Season unit is not subject to an Acid Rain emissions limitation or a CAIR NO_X emissions limitation, then the CAIR designated representative shall either:

(i) Meet the requirements of subpart H of part 75 (concerning monitoring of NO_X mass emissions) for such unit for the entire year and report the NO_X mass emissions data and heat input data for such unit in accordance with paragraph (d)(1) of this section; or

(ii) Meet the requirements of subpart H of part 75 for the control period (including the requirements in § 75.74(c) of this chapter) and report NO_X mass emissions data and heat input data (including the data described in § 75.74(c)(6) of this chapter) for such unit only for the control period of each year and report, in an electronic quarterly report in a format prescribed by the Administrator, for each calendar quarter beginning with:

(A) For a unit that commences commercial operation before July 1, 2007, the calendar quarter covering May 1, 2008 through June 30, 2008;

(B) For a unit that commences commercial operation on or after July 1, 2007, the calendar quarter corresponding to the earlier of the date of

provisional certification or the applicable deadline for initial certification under § 96.370(b), unless that date is not during a control period, in which case reporting shall commence in the quarter that includes May 1 through June 30 of the first control period after such date;.

(C) Notwithstanding paragraphs (d)(2)(ii)(A) and (2)(ii)(B) of this section, for a unit for which a CAIR opt-in permit application is submitted and not withdrawn and a CAIR opt-in permit is not yet issued or denied under subpart IIII of this part, the calendar quarter corresponding to the date specified in § 96.384(b); and

(D) Notwithstanding paragraphs (d)(2)(ii)(A) and (2)(ii)(B) of this section, for a CAIR NO_X Ozone Season opt-in unit under subpart IIII of this part, the calendar quarter corresponding to the date on which the CAIR NO_X Ozone Season opt-in unit enters the CAIR NO_X Ozone Season Trading Program as provided in § 96.384(g).

(2) The CAIR designated representative shall submit each quarterly report to the Administrator within 30 days following the end of the calendar quarter covered by the report. Quarterly reports shall be submitted in the manner specified in § 75.73(f) of this chapter.

(3) For CAIR NO_X Ozone Season units that are also subject to an Acid Rain emissions limitation or the CAIR NO_X Annual Trading Program or CAIR SO_2 Trading Program, quarterly reports shall include the applicable data and information required by subparts F through H of part 75 of this chapter as applicable, in addition to the NO_X mass emission data, heat input data, and other information required by this subpart.

(e) *Compliance certification.* The CAIR designated representative shall submit to the Administrator a compliance certification (in a format prescribed by the Administrator) in support of each quarterly report based on reasonable inquiry of those persons with primary responsibility for ensuring that all of the unit's emissions are correctly and fully monitored. The certification shall state that:

(1) The monitoring data submitted were recorded in accordance with the applicable requirements of this subpart and part 75 of this chapter, including the quality assurance procedures and specifications;

(2) For a unit with add-on NO_X emission controls and for all hours where NO_X data are substituted in accordance with § 75.34(a)(1) of this chapter, the add-on emission controls were operating within the range of parameters listed in the quality assurance/quality control program under appendix B to part 75 of this chapter and the substitute data values do not systematically underestimate NO_X emissions; and

(3) For a unit that is reporting on a control period basis under paragraph (d)(2)(ii) of this section, the NO_X emission rate and NO_X concentration values substituted for missing data under subpart D of part 75 of this chapter are calculated using only values from a control period and do not systematically underestimate NO_X emissions.

[70 FR 25382, May 12, 2005, as amended at 71 FR 25395, Apr. 28, 2006]

§ 96.375 Petitions.

(a) Except as provided in paragraph (b)(2) of this section, the CAIR designated representative of a CAIR NO_X Ozone Season unit that is subject to an Acid Rain emissions limitation may submit a petition under § 75.66 of this chapter to the Administrator requesting approval to apply an alternative to any requirement of this subpart. Application of an alternative to any requirement of this subpart is in accordance with this subpart only to the extent that the petition is approved in writing by the Administrator, in consultation with the permitting authority.

(b)(1) The CAIR designated representative of a CAIR NO_X Ozone Season unit that is not subject to an Acid Rain emissions limitation may submit a petition under § 75.66 of this chapter to the permitting authority and the Administrator requesting approval to apply an alternative to any requirement of this subpart. Application of an alternative to any requirement of this subpart is in accordance with this subpart only to the extent that the petition is approved in writing by both the permitting authority and the Administrator.

(2) The CAIR designated representative of a CAIR NO_X Ozone Season unit that is subject to an Acid Rain emissions limitation may submit a petition under § 75.66 of this chapter to the permitting authority and the Administrator requesting approval to apply an alternative to a requirement concerning any additional continuous emission monitoring system required under § 75.72 of this chapter. Application of an alternative to any such requirement is in accordance with this subpart only to the extent that the petition is approved in writing by both the permitting authority and the Administrator.

Subpart IIII—CAIR NO_X Ozone Season Opt-in Units

SOURCE: 70 FR 25382, May 12, 2005, unless otherwise noted.

§ 96.380 Applicability.

A CAIR NO_X Ozone Season opt-in unit must be a unit that:

(a) Is located in the State;

(b) Is not a CAIR NO_X Ozone Season unit under § 96.304 and is not covered by a retired unit exemption under § 96.305 that is in effect;

(c) Is not covered by a retired unit exemption under § 72.8 of this chapter that is in effect;

(d) Has or is required or qualified to have a title V operating permit or other federally enforceable permit; and

(e) Vents all of its emissions to a stack and can meet the monitoring, recordkeeping, and reporting requirements of subpart HHHH of this part.

§ 96.381 General.

(a) Except as otherwise provided in §§ 96.301 through 96.304, §§ 96.306 through 96.308, and subparts BBBB and CCCC and subparts FFFF through HHHH of this part, a CAIR NO_X Ozone Season opt-in unit shall be treated as a CAIR NO_X Ozone Season unit for purposes of applying such sections and subparts of this part.

(b) Solely for purposes of applying, as provided in this subpart, the requirements of subpart HHHH of this part to a unit for which a CAIR opt-in permit application is submitted and not withdrawn and a CAIR opt-in permit is not yet issued or denied under this subpart, such unit shall be treated as a CAIR NO_X Ozone Season unit before issuance of a CAIR opt-in permit for such unit.

§ 96.382 CAIR designated representative.

Any CAIR NO_X Ozone Season opt-in unit, and any unit for which a CAIR opt-in permit application is submitted and not withdrawn and a CAIR opt-in permit is not yet issued or denied under this subpart, located at the same source as one or more CAIR NO_X Ozone Season units shall have the same CAIR designated representative and alternate CAIR designated representative as such CAIR NO_X Ozone Season units.

§ 96.383 Applying for CAIR opt-in permit.

(a) *Applying for initial CAIR opt-in permit.* The CAIR designated representative of a unit meeting the requirements for a CAIR NO_X Ozone Season opt-in unit in § 96.380 may apply for an initial CAIR opt-in permit at any time, except as provided under § 96.386 (f) and (g), and, in order to apply, must submit the following:

(1) A complete CAIR permit application under § 96.322;

(2) A certification, in a format specified by the permitting authority, that the unit:

(i) Is not a CAIR NO_X Ozone Season unit under § 96.304 and is not covered by a retired unit exemption under § 96.305 that is in effect;

(ii) Is not covered by a retired unit exemption under § 72.8 of this chapter that is in effect;

(iii) Vents all of its emissions to a stack; and

(iv) Has documented heat input for more than 876 hours during the 6 months immediately preceding submission of the CAIR permit application under § 96.322;

(3) A monitoring plan in accordance with subpart HHHH of this part;

(4) A complete certificate of representation under § 96.313 consistent with § 96.382, if no CAIR designated representative has been previously designated for the source that includes the unit; and

(5) A statement, in a format specified by the permitting authority, whether

the CAIR designated representative requests that the unit be allocated CAIR NO_X Ozone Season allowances under § 96.388(b) or § 96.388(c) (subject to the conditions in §§ 96.384(h) and 96.386(g)). If allocation under § 96.388(c) is requested, this statement shall include a statement that the owners and operators of the unit intend to repower the unit before January 1, 2015 and that they will provide, upon request, documentation demonstrating such intent.

(b) *Duty to reapply.* (1) The CAIR designated representative of a CAIR NO_X Ozone Season opt-in unit shall submit a complete CAIR permit application under § 96.322 to renew the CAIR opt-in unit permit in accordance with the permitting authority's regulations for title V operating permits, or the permitting authority's regulations for other federally enforceable permits if applicable, addressing permit renewal.

(2) Unless the permitting authority issues a notification of acceptance of withdrawal of the CAIR NO_X Ozone Season opt-in unit from the CAIR NO_X Ozone Season Trading Program in accordance with § 96.186 or the unit becomes a CAIR NO_X Ozone Season unit under § 96.304, the CAIR NO_X opt-in unit shall remain subject to the requirements for a CAIR NO_X Ozone Season opt-in unit, even if the CAIR designated representative for the CAIR NO_X Ozone Season opt-in unit fails to submit a CAIR permit application that is required for renewal of the CAIR opt-in permit under paragraph (b)(1) of this section.

[70 FR 25382, May 12, 2005, as amended at 71 FR 25396, Apr. 28, 2006]

§ 96.384 Opt-in process.

The permitting authority will issue or deny a CAIR opt-in permit for a unit for which an initial application for a CAIR opt-in permit under § 96.383 is submitted in accordance with the following:

(a) *Interim review of monitoring plan.* The permitting authority and the Administrator will determine, on an interim basis, the sufficiency of the monitoring plan accompanying the initial application for a CAIR opt-in permit under § 96.383. A monitoring plan is sufficient, for purposes of interim review, if the plan appears to contain information demonstrating that the NO_X emissions rate and heat input of the unit and all other applicable parameters are monitored and reported in accordance with subpart HHHH of this part. A determination of sufficiency shall not be construed as acceptance or approval of the monitoring plan.

(b) *Monitoring and reporting.* (1)(i) If the permitting authority and the Administrator determine that the monitoring plan is sufficient under paragraph (a) of this section, the owner or operator shall monitor and report the NO_X emissions rate and the heat input of the unit and all other applicable parameters, in accordance with subpart HHHH of this part, starting on the date of certification of the appropriate monitoring systems under subpart HHHH of this part and continuing until a CAIR opt-in permit is denied under § 96.384(f) or, if a CAIR opt-in permit is issued, the date and time when the unit is withdrawn from the CAIR NO_X Ozone Season Trading Program in accordance with § 96.386.

(ii) The monitoring and reporting under paragraph (b)(1)(i) of this section shall include the entire control period immediately before the date on which the unit enters the CAIR NO_X Ozone Season Trading Program under § 96.384(g), during which period monitoring system availability must not be less than 90 percent under subpart HHHH of this part and the unit must be in full compliance with any applicable State or Federal emissions or emissions-related requirements.

(2) To the extent the NO_X emissions rate and the heat input of the unit are monitored and reported in accordance with subpart HHHH of this part for one or more control periods, in addition to the control period under paragraph (b)(1)(ii) of this section, during which control periods monitoring system availability is not less than 90 percent under subpart HHHH of this part and the unit is in full compliance with any applicable State or Federal emissions or emissions-related requirements and which control periods begin not more than 3 years before the unit enters the CAIR NO_X Ozone Season Trading Program under § 96.384(g), such information shall be used as provided in paragraphs (c) and (d) of this section.

(c) *Baseline heat input.* The unit's baseline heat input shall equal:

(1) If the unit's NO_X emissions rate and heat input are monitored and reported for only one control period, in accordance with paragraph (b)(1) of this section, the unit's total heat input (in mmBtu) for the control period; or

(2) If the unit's NO_X emissions rate and heat input are monitored and reported for more than one control period, in accordance with paragraphs (b)(1) and (2) of this section, the average of the amounts of the unit's total heat input (in mmBtu) for the control periods under paragraphs (b)(1)(ii) and (2) of this section.

(d) *Baseline NO_X emission rate.* The unit's baseline NO_X emission rate shall equal:

(1) If the unit's NO_X emissions rate and heat input are monitored and reported for only one control period, in accordance with paragraph (b)(1) of this section, the unit's NO_X emissions rate (in lb/mmBtu) for the control period;

(2) If the unit's NO_X emissions rate and heat input are monitored and reported for more than one control period, in accordance with paragraphs (b)(1) and (2) of this section, and the unit does not have add-on NO_X emission controls during any such control periods, the average of the amounts of the unit's NO_X emissions rate (in lb/mmBtu) for the control periods under paragraphs (b)(1)(ii) and (2) of this section; or

(3) If the unit's NO_X emissions rate and heat input are monitored and reported for more than one control period, in accordance with paragraphs (b)(1) and (2) of this section, and the unit has add-on NO_X emission controls during any such control periods, the average of the amounts of the unit's NO_X emissions rate (in lb/mmBtu) for such control periods during which the unit has add-on NO_X emission controls.

(e) *Issuance of CAIR opt-in permit.* After calculating the baseline heat input and the baseline NO_X emissions rate for the unit under paragraphs (c) and (d) of this section and if the permitting authority determines that the CAIR designated representative shows that the unit meets the requirements for a CAIR NO_X Ozone Season opt-in unit in § 96.380 and meets the elements certified in § 96.383(a)(2), the permitting authority will issue a CAIR opt-in permit. The permitting authority will provide a copy of the CAIR opt-in permit to the Administrator, who will then establish a compliance account for the source that includes the CAIR NO_X Ozone Season opt-in unit unless the source already has a compliance account.

(f) *Issuance of denial of CAIR opt-in permit.* Notwithstanding paragraphs (a) through (e) of this section, if at any time before issuance of a CAIR opt-in permit for the unit, the permitting authority determines that the CAIR designated representative fails to show that the unit meets the requirements for a CAIR NO_X Ozone Season opt-in unit in § 96.380 or meets the elements certified in § 96.383(a)(2), the permitting authority will issue a denial of a CAIR opt-in permit for the unit.

(g) *Date of entry into CAIR NO_X Ozone Season Trading Program.* A unit for which an initial CAIR opt-in permit is issued by the permitting authority shall become a CAIR NO_X Ozone Season opt-in unit, and a CAIR NO_X Ozone Season unit, as of the later of May 1, 2009 or May 1 of the first control period during which such CAIR opt-in permit is issued.

(h) *Repowered CAIR NO_X Ozone Season opt-in unit.* (1) If CAIR designated representative requests, and the permitting authority issues a CAIR opt-in permit providing for, allocation to a CAIR NO_X Ozone Season opt-in unit of CAIR NO_X Ozone Season allowances under § 96.388(c) and such unit is repowered after its date of entry into the CAIR NO_X Ozone Season Trading Program under paragraph (g) of this section, the repowered unit shall be treated as a CAIR NO_X Ozone Season opt-in unit replacing the original CAIR NO_X Ozone Season opt-in unit, as of the date of start-up of the repowered unit's combustion chamber.

(2) Notwithstanding paragraphs (c) and (d) of this section, as of the date of start-up under paragraph (h)(1) of this section, the repowered unit shall be deemed to have the same date of commencement of operation, date of commencement of commercial operation, baseline heat input, and baseline NO_X

emission rate as the original CAIR NO_X Ozone Season opt-in unit, and the original CAIR NO_X Ozone Season opt-in unit shall no longer be treated as a CAIR NO_X Ozone Season opt-in unit or a CAIR NO_X Ozone Season unit.

[70 FR 25382, May 12, 2005, as amended at 71 FR 25396, Apr. 28, 2006; 71 FR 74794, Dec. 13, 2006]

§ 96.385 CAIR opt-in permit contents.

(a) Each CAIR opt-in permit will contain:

(1) All elements required for a complete CAIR permit application under § 96.322;

(2) The certification in § 96.383(a)(2);

(3) The unit's baseline heat input under § 96.384(c);

(4) The unit's baseline NO_X emission rate under § 96.384(d);

(5) A statement whether the unit is to be allocated CAIR NO_X Ozone Season allowances under § 96.388(b) or § 96.388(c) (subject to the conditions in §§ 96.384(h) and 96.386(g));

(6) A statement that the unit may withdraw from the CAIR NO_X Ozone Season Trading Program only in accordance with § 96.386; and

(7) A statement that the unit is subject to, and the owners and operators of the unit must comply with, the requirements of § 96.387.

(b) Each CAIR opt-in permit is deemed to incorporate automatically the definitions of terms under § 96.302 and, upon recordation by the Administrator under subpart FFFF or GGGG of this part or this subpart, every allocation, transfer, or deduction of CAIR NO_X Ozone Season allowances to or from the compliance account of the source that includes a CAIR NO_X Ozone Season opt-in unit covered by the CAIR opt-in permit.

(c) The CAIR opt-in permit shall be included, in a format specified by the permitting authority, in the CAIR permit for the source where the CAIR NO_X Ozone Season opt-in unit is located and in a title V operating permit or other federally enforceable permit for the source.

[70 FR 25382, May 12, 2005, as amended at 71 FR 25396, Apr. 28, 2006]

§ 96.386 Withdrawal from CAIR NO_X Ozone Season Trading Program.

Except as provided under paragraph (g) of this section, a CAIR NO_X Ozone Season opt-in unit may withdraw from the CAIR NO_X Ozone Season Trading Program, but only if the permitting authority issues a notification to the CAIR designated representative of the CAIR NO_X Ozone Season opt-in unit of the acceptance of the withdrawal of the CAIR NO_X Ozone Season opt-in unit in accordance with paragraph (d) of this section.

(a) *Requesting withdrawal.* In order to withdraw a CAIR NO_X Ozone Season opt-on unit from the CAIR NO_X Ozone Season Trading Program, the CAIR designated representative of the CAIR NO_X Ozone Season opt-in unit shall submit to the permitting authority a request to withdraw effective as of midnight of September 30 of a specified calendar year, which date must be at least 4 years after September 30 of the year of entry into the CAIR NO_X Ozone Season Trading Program under § 96.384(g). The request must be submitted no later than 90 days before the requested effective date of withdrawal.

(b) *Conditions for withdrawal.* Before a CAIR NO_X Ozone Season opt-in unit covered by a request under paragraph (a) of this section may withdraw from the CAIR NO_X Ozone Season Trading Program and the CAIR opt-in permit may be terminated under paragraph (e) of this section, the following conditions must be met:

(1) For the control period ending on the date on which the withdrawal is to be effective, the source that includes the CAIR NO_X Ozone Season opt-in unit must meet the requirement to hold CAIR NO_X Ozone Season allowances under § 96.306(c) and cannot have any excess emissions.

(2) After the requirement for withdrawal under paragraph (b)(1) of this section is met, the Administrator will deduct from the compliance account of the source that includes the CAIR NO_X Ozone Season opt-in unit CAIR NO_X Ozone Season allowances equal in amount to and allocated for the same or a prior control period as any CAIR NO_X Ozone Season allowances allocated to the CAIR NO_X Ozone Season opt-in

unit under § 96.388 for any control period for which the withdrawal is to be effective. If there are no remaining CAIR NO_X Ozone Season units at the source, the Administrator will close the compliance account, and the owners and operators of the CAIR NO_X Ozone Season opt-in unit may submit a CAIR NO_X Ozone Season allowance transfer for any remaining CAIR NO_X Ozone Season allowances to another CAIR NO_X Ozone Season Allowance Tracking System in accordance with subpart GGGG of this part.

(c) *Notification.* (1) After the requirements for withdrawal under paragraphs (a) and (b) of this section are met (including deduction of the full amount of CAIR NO_X Ozone Season allowances required), the permitting authority will issue a notification to the CAIR designated representative of the CAIR NO_X Ozone Season opt-in unit of the acceptance of the withdrawal of the CAIR NO_X Ozone Season opt-in unit as of midnight on September 30 of the calendar year for which the withdrawal was requested.

(2) If the requirements for withdrawal under paragraphs (a) and (b) of this section are not met, the permitting authority will issue a notification to the CAIR designated representative of the CAIR NO_X Ozone Season opt-in unit that the CAIR NO_X Ozone Season opt-in unit's request to withdraw is denied. Such CAIR NO_X Ozone Season opt-in unit shall continue to be a CAIR NO_X Ozone Season opt-in unit.

(d) *Permit amendment.* After the permitting authority issues a notification under paragraph (c)(1) of this section that the requirements for withdrawal have been met, the permitting authority will revise the CAIR permit covering the CAIR NO_X Ozone Season opt-in unit to terminate the CAIR opt-in permit for such unit as of the effective date specified under paragraph (c)(1) of this section. The unit shall continue to be a CAIR NO_X Ozone Season opt-in unit until the effective date of the termination and shall comply with all requirements under the CAIR NO_X Ozone Season Trading Program concerning any control periods for which the unit is a CAIR NO_X Ozone Season opt-in unit, even if such requirements arise or must be complied with after the withdrawal takes effect.

(e) *Reapplication upon failure to meet conditions of withdrawal.* If the permitting authority denies the CAIR NO_X Ozone Season opt-in unit's request to withdraw, the CAIR designated representative may submit another request to withdraw in accordance with paragraphs (a) and (b) of this section.

(f) *Ability to reapply to the CAIR NO_X Ozone Season Trading Program.* Once a CAIR NO_X Ozone Season opt-in unit withdraws from the CAIR NO_X Ozone Season Trading Program and its CAIR opt-in permit is terminated under this section, the CAIR designated representative may not submit another application for a CAIR opt-in permit under § 96.383 for such CAIR NO_X Ozone Season opt-in unit before the date that is 4 years after the date on which the withdrawal became effective. Such new application for a CAIR opt-in permit will be treated as an initial application for a CAIR opt-in permit under § 96.384.

(g) *Inability to withdraw.* Notwithstanding paragraphs (a) through (f) of this section, a CAIR NO_X Ozone Season opt-in unit shall not be eligible to withdraw from the CAIR NO_X Ozone Season Trading Program if the CAIR designated representative of the CAIR NO_X Ozone Season opt-in unit requests, and the permitting authority issues a CAIR opt-in permit providing for, allocation to the CAIR NO_X Ozone Season opt-in unit of CAIR NO_X Ozone Season allowances under § 96.388(c).

[70 FR 25382, May 12, 2005, as amended at 71 FR 25396, Apr. 28, 2006]

§ 96.387 Change in regulatory status.

(a) *Notification.* If a CAIR NO_X Ozone Season opt-in unit becomes a CAIR NO_X Ozone Season unit under § 96.304, then the CAIR designated representative shall notify in writing the permitting authority and the Administrator of such change in the CAIR NO_X Ozone Season opt-in unit's regulatory status, within 30 days of such change.

(b) *Permitting authority's and Administrator's actions.* (1) If a CAIR NO_X Ozone Season opt-in unit becomes a CAIR NO_X Ozone Season unit under § 96.304, the permitting authority will revise the CAIR NO_X Ozone Season opt-in unit's CAIR opt-in permit to meet the

requirements of a CAIR permit under § 96.323, and remove the CAIR opt-in permit provisions, as of the date on which the CAIR NO_X Ozone Season opt-in unit becomes a CAIR NO_X Ozone Season unit under § 96.304.

(2)(i) The Administrator will deduct from the compliance account of the source that includes the CAIR NO_X Ozone Season opt-in unit that becomes a CAIR NO_X Ozone Season unit under § 96.304, CAIR NO_X Ozone Season allowances equal in amount to and allocated for the same or a prior control period as:

(A) Any CAIR NO_X Ozone Season allowances allocated to the CAIR NO_X Ozone Season opt-in unit under § 96.388 for any control period after the date on which the CAIR NO_X Ozone Season opt-in unit becomes a CAIR NO_X Ozone Season unit under § 96.304; and

(B) If the date on which the CAIR NO_X Ozone Season opt-in unit becomes a CAIR NO_X Ozone Season unit under § 96.304 is not September 30, the CAIR NO_X Ozone Season allowances allocated to the CAIR NO_X Ozone Season opt-in unit under § 96.388 for the control period that includes the date on which the CAIR NO_X Ozone Season opt-in unit becomes a CAIR NO_X Ozone Season unit under § 96.304, multiplied by the ratio of the number of days, in the control period, starting with the date on which the CAIR NO_X Ozone Season opt-in unit becomes a CAIR NO_X Ozone Season unit under § 96.304 divided by the total number of days in the control period and rounded to the nearest whole allowance as appropriate.

(ii) The CAIR designated representative shall ensure that the compliance account of the source that includes the CAIR NO_X Ozone Season opt-in unit that becomes a CAIR NO_X Ozone Season unit under § 96.304 contains the CAIR NO_X Ozone Season allowances necessary for completion of the deduction under paragraph (b)(2)(i) of this section.

(3)(i) For every control period after the date on which the CAIR NO_X Ozone Season opt-in unit becomes a CAIR NO_X Ozone Season unit under § 96.304, the CAIR NO_X Ozone Season opt-in unit will be allocated CAIR NO_X Ozone Season allowances under § 96.342.

(ii) If the date on which the CAIR NO_X Ozone Season opt-in unit becomes a CAIR NO_X Ozone Season unit under § 96.304 is not September 30, the following amount of CAIR NO_X Ozone Season allowances will be allocated to the CAIR NO_X Ozone Season opt-in unit (as a CAIR NO_X Ozone Season unit) under § 96.342 for the control period that includes the date on which the CAIR NO_X Ozone Season opt-in unit becomes a CAIR NO_X Ozone Season unit under § 96.304:

(A) The amount of CAIR NO_X Ozone Season allowances otherwise allocated to the CAIR NO_X Ozone Season opt-in unit (as a CAIR NO_X Ozone Season unit) under § 96.342 for the control period multiplied by;

(B) The ratio of the number of days, in the control period, starting with the date on which the CAIR NO_X Ozone Season opt-in unit becomes a CAIR NO_X Ozone Season unit under § 96.304, divided by the total number of days in the control period; and

(C) Rounded to the nearest whole allowance as appropriate.

[70 FR 25382, May 12, 2005, as amended at 71 FR 25396, Apr. 28, 2006; 71 FR 74794, Dec. 13, 2006]

§ 96.388 CAIR NO_X Ozone Season allowance allocations to CAIR NO_X Ozone Season opt-in units.

(a) *Timing requirements.* (1) When the CAIR opt-in permit is issued under § 96.384(e), the permitting authority will allocate CAIR NO_X Ozone Season allowances to the CAIR NO_X Ozone Season opt-in unit, and submit to the Administrator the allocation for the control period in which a CAIR NO_X Ozone Season opt-in unit enters the CAIR NO_X Ozone Season Trading Program under § 96.384(g), in accordance with paragraph (b) or (c) of this section.

(2) By no later than July 31 of the control period after the control period in which a CAIR NO_X Ozone Season opt-in unit enters the CAIR NO_X Ozone Season Trading Program under § 96.384(g) and July 31 of each year thereafter, the permitting authority will allocate CAIR NO_X Ozone Season allowances to the CAIR NO_X Ozone Season opt-in unit, and submit to the Administrator the allocation for the

control period that includes such submission deadline and in which the unit is a CAIR NO_X Ozone Season opt-in unit, in accordance with paragraph (b)or (c) of this section.

(b) *Calculation of allocation*. For each control period for which a CAIR NO_X Ozone Season opt-in unit is to be allocated CAIR NO_X Ozone Season allowances, the permitting authority will allocate in accordance with the following procedures:

(1) The heat input (in mmBtu) used for calculating the CAIR NO_X Ozone Season allowance allocation will be the lesser of:

(i) The CAIR NO_X Ozone Season opt-in unit's baseline heat input determined under § 96.384(c); or

(ii) The CAIR NO_X Ozone Season opt-in unit's heat input, as determined in accordance with subpart HHHH of this part, for the immediately prior control period, except when the allocation is being calculated for the control period in which the CAIR NO_X Ozone Season opt-in unit enters the CAIR NO_X Ozone Season Trading Program under § 96.384(g).

(2) The NO_X emission rate (in lb/mmBtu) used for calculating CAIR NO_X Ozone Season allowance allocations will be the lesser of:

(i) The CAIR NO_X Ozone Season opt-in unit's baseline NO_X emissions rate (in lb/mmBtu) determined under § 96.384(d) and multiplied by 70 percent; or

(ii) The most stringent State or Federal NO_X emissions limitation applicable to the CAIR NO_X Ozone Season opt-in unit at any time during the control period for which CAIR NO_X Ozone Season allowances are to be allocated.

(3) The permitting authority will allocate CAIR NO_X Ozone Season allowances to the CAIR NO_X Ozone Season opt-in unit in an amount equaling the heat input under paragraph (b)(1) of this section, multiplied by the NO_X emission rate under paragraph (b)(2) of this section, divided by 2,000 lb/ton, and rounded to the nearest whole allowance as appropriate.

(c) Notwithstanding paragraph (b) of this section and if the CAIR designated representative requests, and the permitting authority issues a CAIR opt-in permit'' (based on a demonstration of the intent to repower stated under § 96.383(a)(5)) providing for, allocation to a CAIR NO_X Ozone Season opt-in unit of CAIR NO_X Ozone Season allowances under this paragraph (subject to the conditions in §§ 96.384(h) and 96.386(g)), the permitting authority will allocate to the CAIR NO_X Ozone Season opt-in unit as follows:

(1) For each control period in 2009 through 2014 for which the CAIR NO_X Ozone Season opt-in unit is to be allocated CAIR NO_X Ozone Season allowances,

(i) The heat input (in mmBtu) used for calculating CAIR NO_X Ozone Season allowance allocations will be determined as described in paragraph (b)(1) of this section.

(ii) The NO_X emission rate (in lb/mmBtu) used for calculating CAIR NO_X Ozone Season allowance allocations will be the lesser of:

(A) The CAIR NO_X Ozone Season opt-in unit's baseline NO_X emissions rate (in lb/mmBtu) determined under § 96.384(d); or

(B) The most stringent State or Federal NO_X emissions limitation applicable to the CAIR NO_X Ozone Season opt-in unit at any time during the control period in which the CAIR NO_X Ozone Season opt-in unit enters the CAIR NO_X Ozone Season Trading Program under § 96.384(g).

(iii) The permitting authority will allocate CAIR NO_X Ozone Season allowances to the CAIR NO_X Ozone Season opt-in unit in an amount equaling the heat input under paragraph (c)(1)(i) of this section, multiplied by the NO_X emission rate under paragraph (c)(1)(ii) of this section, divided by 2,000 lb/ton, and rounded to the nearest whole allowance as appropriate.

(2) For each control period in 2015 and thereafter for which the CAIR NO_X Ozone Season opt-in unit is to be allocated CAIR NO_X Ozone Season allowances,

(i) The heat input (in mmBtu) used for calculating the CAIR NO_X Ozone Season allowance allocations will be determined as described in paragraph (b)(1) of this section.

(ii) The NO_X emission rate (in lb/mmBtu) used for calculating the CAIR NO_X Ozone Season allowance allocation will be the lesser of:

(A) 0.15 lb/mmBtu;

(B) The CAIR NO_X Ozone Season opt-in unit's baseline NO_X emissions rate (in lb/mmBtu) determined under § 96.384(d); or

(C) The most stringent State or Federal NO_X emissions limitation applicable to the CAIR NO_X Ozone Season opt-in unit at any time during the control period for which CAIR NO_X Ozone Season allowances are to be allocated.

(iii) The permitting authority will allocate CAIR NO_X Ozone Season allowances to the CAIR NO_X Ozone Season opt-in unit in an amount equaling the heat input under paragraph (c)(2)(i) of this section, multiplied by the NO_X emission rate under paragraph (c)(2)(ii) of this section, divided by 2,000 lb/ton, and rounded to the nearest whole allowance as appropriate.

(d) *Recordation*. (1) The Administrator will record, in the compliance account of the source that includes the CAIR NO_X Ozone Season opt-in unit, the CAIR NO_X Ozone Season allowances allocated by the permitting authority to the CAIR NO_X Ozone Season opt-in unit under paragraph (a)(1) of this section.

(2) By September 1, of the control period in which a CAIR NO_X Ozone Season opt-in unit enters the CAIR NO_X Ozone Season Trading Program under § 96.384(g), and September 1 of each year thereafter, the Administrator will record, in the compliance account of the source that includes the CAIR NO_X Ozone Season opt-in unit, the CAIR NO_X Ozone Season allowances allocated by the permitting authority to the CAIR NO_X Ozone Season opt-in unit under paragraph (a)(2) of this section.

[70 FR 25382, May 12, 2005, as amended at 71 FR 25396, Apr. 28, 2006]

PART 97—FEDERAL NO_X BUDGET TRADING PROGRAM AND CAIR NO_X AND SO_2 TRADING PROGRAMS

Subpart A—NO_X Budget Trading Program General Provisions

Sec.
97.1 Purpose.
97.2 Definitions.
97.3 Measurements, abbreviations, and acronyms.
97.4 Applicability.
97.5 Retired unit exemption.
97.6 Standard requirements.
97.7 Computation of time.

Subpart B—NO_X Authorized Account Representative for NO_X Budget Sources

97.10 Authorization and responsibilities of NO_X authorized account representative.
97.11 Alternate NO_X authorized account representative.
97.12 Changing NO_X authorized account representative and alternate NO_X authorized account representative; changes in owners and operators.
97.13 Account certificate of representation.
97.14 Objections concerning NO_X authorized account representative.

Subpart C—Permits

97.20 General NO_X Budget Trading Program permit requirements.
97.21 Submission of NO_X Budget permit applications.
97.22 Information requirements for NO_X Budget permit applications.
97.23 NO_X Budget permit contents.
97.24 NO_X Budget permit revisions.

Subpart D—Compliance Certification

97.30 Compliance certification report.
97.31 Administrator's action on compliance certifications.

Subpart E—NO_X Allowance Allocations

97.40 Trading program budget.
97.41 Timing requirements for NO_X allowance allocations.
97.42 NO_X allowance allocations.
97.43 Compliance supplement pool.

Subpart F—NO_X Allowance Tracking System

97.50 NO_X Allowance Tracking System accounts.
97.51 Establishment of accounts.
97.52 NO_X Allowance Tracking System responsibilities of NO_X authorized account representative.
97.53 Recordation of NO_X allowance allocations.
97.54 Compliance.
97.55 Banking.
97.56 Account error.
97.57 Closing of general accounts.

Subpart G—NO_X Allowance Transfers

97.60 Submission of NO_X allowance transfers.
97.61 EPA recordation.
97.62 Notification.

Subpart H—Monitoring and Reporting

97.70 General requirements.
97.71 Initial certification and recertification procedures.
97.72 Out of control periods.
97.73 Notifications.
97.74 Recordkeeping and reporting.
97.75 Petitions.
97.76 Additional requirements to provide heat input data.

Subpart I—Individual Unit Opt-ins

97.80 Applicability.
97.81 General.
97.82 NO_X authorized account representative.
97.83 Applying for NO_X Budget opt-in permit.
97.84 Opt-in process.
97.85 NO_X Budget opt-in permit contents.
97.86 Withdrawal from NO_X Budget Trading Program.
97.87 Change in regulatory status.
97.88 NO_X allowance allocations to opt-in units.

Subpart J—Appeal Procedures

97.90 Appeal procedures.

Subpart AA—CAIR NO_X Annual Trading Program General Provisions

97.101 Purpose.
97.102 Definitions.
97.103 Measurements, abbreviations, and acronyms.
97.104 Applicability.
97.105 Retired unit exemption.
97.106 Standard requirements.
97.107 Computation of time.
97.108 Appeal procedures.

Subpart BB—CAIR Designated Representative for CAIR NO_X Sources

97.110 Authorization and responsibilities of CAIR designated representative.
97.111 Alternate CAIR designated representative.
97.112 Changing CAIR designated representative and alternate CAIR designated representative; changes in owners and operators.
97.113 Certificate of representation.
97.114 Objections concerning CAIR designated representative.
97.115 Delegation by CAIR designated representative and alternate CAIR designated representative.

Subpart CC—Permits

97.120 General CAIR NO_X Annual Trading Program permit requirements.
97.121 Submission of CAIR permit applications.
97.122 Information requirements for CAIR permit applications.
97.123 CAIR permit contents and term.
97.124 CAIR permit revisions.

Subpart DD [Reserved]

Subpart EE—CAIR NO_X Allowance Allocations

97.140 State trading budgets.
97.141 Timing requirements for CAIR NO_X allowance allocations.
97.142 CAIR NO_X allowance allocations.
97.143 Compliance supplement pool.
97.144 Alternative of allocation of CAIR NO_X allowances and compliance supplement pool by permitting authority.
APPENDIX A TO SUBPART EE OF PART 97—STATES WITH APPROVED STATE IMPLEMENTATION PLAN REVISIONS CONCERNING ALLOCATIONS

Subpart FF— CAIR NO_X Allowance Tracking System

97.150 [Reserved]
97.151 Establishment of accounts.
97.152 Responsibilities of CAIR authorized account representative.
97.153 Recordation of CAIR NO_X allowance allocations.
97.154 Compliance with CAIR NO_X emissions limitation.
97.155 Banking.
97.156 Account error.
97.157 Closing of general accounts.

Subpart GG—CAIR NO_X Allowance Transfers

97.160 Submission of CAIR NO_X allowance transfers.
97.161 EPA recordation.
97.162 Notification.

Subpart HH—Monitoring and Reporting

97.170 General requirements.
97.171 Initial certification and recertification procedures.
97.172 Out of control periods.
97.173 Notifications.
97.174 Recordkeeping and reporting.
97.175 Petitions.

Subpart II—CAIR NO_X Opt-in Units

97.180 Applicability.
97.181 General.
97.182 CAIR designated representative.
97.183 Applying for CAIR opt-in permit.
97.184 Opt-in process.
97.185 CAIR opt-in permit contents.
97.186 Withdrawal from CAIR NO_X Annual Trading Program.

97.187 Change in regulatory status.
97.188 CAIR NO_X allowance allocations to CAIR NO_X opt-in units.

APPENDIX A TO SUBPART II OF PART 97—STATES WITH APPROVED STATE IMPLEMENTATION PLAN REVISIONS CONCERNING CAIR NO_X OPT-IN UNITS

Subpart AAA—CAIR SO_2 Trading Program General Provisions

97.201 Purpose.
97.202 Definitions.
97.203 Measurements, abbreviations, and acronyms.
97.204 Applicability.
97.205 Retired unit exemption.
97.206 Standard requirements.
97.207 Computation of time.
97.208 Appeal procedures.

Subpart BBB—CAIR Designated Representative for CAIR SO_2 Sources

97.210 Authorization and responsibilities of CAIR designated representative.
97.211 Alternate CAIR designated representative.
97.212 Changing CAIR designated representative and alternate CAIR designated representative; changes in owners and operators.
97.213 Certificate of representation.
97.214 Objections concerning CAIR designated representative.
97.215 Delegation by CAIR designated representative and alternate CAIR designated representative.

Subpart CCC—Permits

97.220 General CAIR SO_2 Trading Program permit requirements.
97.221 Submission of CAIR permit applications.
97.222 Information requirements for CAIR permit applications.
97.223 CAIR permit contents and term.
97.224 CAIR permit revisions.

Subparts DDD—EEE [Reserved]

Subpart FFF—CAIR SO_2 Allowance Tracking System

97.250 [Reserved]
97.251 Establishment of accounts.
97.252 Responsibilities of CAIR authorized account representative.
97.253 Recordation of CAIR SO_2 allowances.
97.254 Compliance with CAIR SO_2 emissions limitation.
97.255 Banking.
97.256 Account error.
97.257 Closing of general accounts.

Subpart GGG—CAIR SO_2 Allowance Transfers

97.260 Submission of CAIR SO_2 allowance transfers.
97.261 EPA recordation.
97.262 Notification.

Subpart HHH—Monitoring and Reporting

97.270 General requirements.
97.271 Initial certification and recertification procedures.
97.272 Out of control periods.
97.273 Notifications.
97.274 Recordkeeping and reporting.
97.275 Petitions.

Subpart III—CAIR SO_2 Opt-in Units

97.280 Applicability.
97.281 General.
97.282 CAIR designated representative.
97.283 Applying for CAIR opt-in permit.
97.284 Opt-in process.
97.285 CAIR opt-in permit contents.
97.286 Withdrawal from CAIR SO_2 Trading Program.
97.287 Change in regulatory status.
97.288 CAIR SO_2 allowance allocations to CAIR SO_2 opt-in units.

APPENDIX A TO SUBPART III OF PART 97—STATES WITH APPROVED STATE IMPLEMENTATION PLAN REVISIONS CONCERNING CAIR SO_2 OPT-IN UNITS

Subpart AAAA—CAIR NO_X Ozone Season Trading Program General Provisions

97.301 Purpose.
97.302 Definitions.
97.303 Measurements, abbreviations, and acronyms.
97.304 Applicability.
97.305 Retired unit exemption.
97.306 Standard requirements.
97.307 Computation of time.
97.308 Appeal procedures.

APPENDIX A TO SUBPART AAAA OF PART 97—STATES WITH APPROVED STATE IMPLEMENTATION PLAN REVISIONS CONCERNING APPLICABILITY

Subpart BBBB—CAIR Designated Representative for CAIR NO_X Ozone Season Sources

97.310 Authorization and responsibilities of CAIR designated representative.
97.311 Alternate CAIR designated representative.
97.312 Changing CAIR designated representative and alternate CAIR designated representative; changes in owners and operators.
97.313 Certificate of representation.

97.314 Objections concerning CAIR designated representative.
97.315 Delegation by CAIR designated representative and alternate CAIR designated representative.

Subpart CCCC—Permits

97.320 General CAIR NO_X Ozone Season Trading Program permit requirements.
97.321 Submission of CAIR permit applications.
97.322 Information requirements for CAIR permit applications.
97.323 CAIR permit contents and term.
97.324 CAIR permit revisions.

Subpart DDDD [Reserved]

Subpart EEEE—CAIR NO_X Ozone Season Allowance Allocations

97.340 State trading budgets.
97.341 Timing requirements for CAIR NO_X Ozone Season allowance allocations.
97.342 CAIR NO_X Ozone Season allowance allocations.
97.343 Alternative of allocation of CAIR NO_X Ozone Season allowances by permitting authority.
APPENDIX A TO SUBPART EEEE OF PART 97—STATES WITH APPROVED STATE IMPLEMENTATION PLAN REVISIONS CONCERNING ALLOCATIONS

Subpart FFFF—CAIR NO_X Ozone Season Allowance Tracking System

97.350 [Reserved]
97.351 Establishment of accounts.
97.352 Responsibilities of CAIR authorized account representative.
97.353 Recordation of CAIR NO_X Ozone Season allowance allocations.
97.354 Compliance with CAIR NO_X emissions limitation.
97.355 Banking.
97.356 Account error.
97.357 Closing of general accounts.

Subpart GGGG—CAIR NO_X Ozone Season Allowance Transfers

97.360 Submission of CAIR NO_X Ozone Season allowance transfers.
97.361 EPA recordation.
97.362 Notification.

Subpart HHHH—Monitoring and Reporting

97.370 General requirements.
97.371 Initial certification and recertification procedures.
97.372 Out of control periods.
97.373 Notifications.
97.374 Recordkeeping and reporting.
97.375 Petitions.

Subpart IIII—CAIR NO_X Ozone Season Opt-in Units

97.380 Applicability.
97.381 General.
97.382 CAIR designated representative.
97.383 Applying for CAIR opt-in permit.
97.384 Opt-in process.
97.385 CAIR opt-in permit contents.
97.386 Withdrawal from CAIR NO_X Ozone Season Trading Program.
97.387 Change in regulatory status.
97.388 CAIR NO_X Ozone Season allowance allocations to CAIR NO_X Ozone Season opt-in units.
APPENDIX A TO SUBPART IIII OF PART 97—STATES WITH APPROVED STATE IMPLEMENTATION PLAN REVISIONS CONCERNING CAIR NO_X OZONE SEASON OPT-IN UNITS
APPENDIX A TO PART 97—FINAL SECTION 126 RULE: EGU ALLOCATIONS, 2003–2007
APPENDIX B TO PART 97—FINAL SECTION 126 RULE: NON-EGU ALLOCATIONS, 2003–2007
APPENDIX C TO PART 97—FINAL SECTION 126 RULE: TRADING BUDGET, 2003–2007
APPENDIX D TO PART 97—FINAL SECTION 126 RULE: STATE COMPLIANCE SUPPLEMENT POOLS FOR THE SECTION 126 FINAL RULE (TONS)

AUTHORITY: 42 U.S.C. 7401, 7403, 7410, 7426, 7601, and 7651, *et seq.*

SOURCE: 65 FR 2727, Jan. 18, 2000, unless otherwise noted. 71 FR 25396, 25422, and 25443, Apr. 28, 2006

Subpart A—NO_X Budget Trading Program General Provisions

§97.1 Purpose.

This part establishes general provisions and the applicability, permitting, allowance, excess emissions, monitoring, and opt-in provisions for the federal NO_X Budget Trading Program, under section 126 of the CAA and §52.34 of this chapter, as a means of mitigating the interstate transport of ozone and nitrogen oxides, an ozone precursor.

§97.2 Definitions.

The terms used in this part shall have the meanings set forth in this section as follows:

Account number means the identification number given by the Administrator to each NO_X Allowance Tracking System account.

Acid Rain emissions limitation means, as defined in §72.2 of this chapter, a

limitation on emissions of sulfur dioxide or nitrogen oxides under the Acid Rain Program under title IV of the Clean Air Act.

Administrator means the Administrator of the United States Environmental Protection Agency or the Administrator's duly authorized representative.

Allocate or *allocation* means, with regard to NO_X allowances, the determination by the Administrator of the number of NO_X allowances to be initially credited to a NO_X Budget unit or an allocation set-aside.

Automated data acquisition and handling system or *DAHS* means that component of the CEMS, or other emissions monitoring system approved for use under subpart H of this part, designed to interpret and convert individual output signals from pollutant concentration monitors, flow monitors, diluent gas monitors, and other component parts of the monitoring system to produce a continuous record of the measured parameters in the measurement units required by subpart H of this part.

Boiler means an enclosed fossil or other fuel-fired combustion device used to produce heat and to transfer heat to recirculating water, steam, or other medium.

Clean Air Act means the Clean Air Act, 42 U.S.C. 7401 et seq.

Combined cycle system means a system comprised of one or more combustion turbines, heat recovery steam generators, and steam turbines configured to improve overall efficiency of electricity generation or steam production.

Combustion turbine means an enclosed fossil or other fuel-fired device that is comprised of a compressor, a combustor, and a turbine, and in which the flue gas resulting from the combustion of fuel in the combustor passes through the turbine, rotating the turbine.

Commence commercial operation means, with regard to a unit that serves a generator, to have begun to produce steam, gas, or other heated medium used to generate electricity for sale or use, including test generation. Except as provided in § 97.4(b), § 97.5, or subpart I of this part, for a unit that is a NO_X Budget unit under § 97.4(a) on the date the unit commences commercial operation, such date shall remain the unit's date of commencement of commercial operation even if the unit is subsequently modified, reconstructed, or repowered. Except as provided in § 97.4(b), § 97.5, or subpart I of this part, for a unit that is not a NO_X Budget unit under § 97.4(a) on the date the unit commences commercial operation, the date the unit becomes a NO_X Budget unit under § 97.4(a) shall be the unit's date of commencement of commercial operation.

Commence operation means to have begun any mechanical, chemical, or electronic process, including, with regard to a unit, start-up of a unit's combustion chamber. Except as provided in § 97.4(b), § 97.5, or subpart I of this part for a unit that is a NO_X Budget unit under § 97.4(a) on the date of commencement of operation, such date shall remain the unit's date of commencement of operation even if the unit is subsequently modified, reconstructed, or repowered. Except as provided in § 97.4(b), § 97.5, or subpart I of this part, for a unit that is not a NO_X Budget unit under § 97.4(a) on the date of commencement of operation, the date the unit becomes a NO_X Budget unit under § 97.4(a) shall be the unit's date of commencement of operation.

Common stack means a single flue through which emissions from two or more units are exhausted.

Compliance account means a NO_X Allowance Tracking System account, established by the Administrator for a NO_X Budget unit under subpart F of this part, in which the NO_X allowance allocations for the unit are initially recorded and in which are held NO_X allowances available for use by the unit for a control period for the purpose of meeting the unit's NO_X Budget emissions limitation.

Continuous emission monitoring system or *CEMS* means the equipment required under subpart H of this part to sample, analyze, measure, and provide, by means of readings taken at least once every 15 minutes (using an automated data acquisition and handling system (DAHS)), a permanent record of nitrogen oxides (NO_X) emissions, stack gas volumetric flow rate or stack gas moisture content (as applicable), in a manner consistent with part 75 of this

chapter. The following are the principal types of continuous emission monitoring systems required under subpart H of this part:

(1) A flow monitoring system, consisting of a stack flow rate monitor and an automated DAHS. A flow monitoring system provides a permanent, continuous record of stack gas volumetric flow rate, in units of standard cubic feet per hour (scfh);

(2) A nitrogen oxides concentration monitoring system, consisting of a NO_X pollutant concentration monitor and an automated DAHS. A NO_X concentration monitoring system provides a permanent, continuous record of NO_X emissions in units of parts per million (ppm);

(3) A nitrogen oxides emission rate (or NO_X-diluent) monitoring system, consisting of a NO_X pollutant concentration monitor, a diluent gas (CO_2 or O_2) monitor, and an automated DAHS. A NO_X concentration monitoring system provides a permanent, continuous record of: NO_X concentration in units of parts per million (ppm), diluent gas concentration in units of percent O_2 or CO_2 (percent O_2 or CO_2), and NO_X emission rate in units of pounds per million British thermal units (lb/mmBtu); and

(4) A moisture monitoring system, as defined in §75.11(b)(2) of this chapter. A moisture monitoring system provides a permanent, continuous record of the stack gas moisture content, in units of percent H_2O (percent H_2O).

Control period means the period beginning May 1 of a year and ending on September 30 of the same year, inclusive.

Electricity for sale under firm contract to the grid means electricity for sale where the capacity involved is intended to be available at all times during the period covered by a guaranteed commitment to deliver, even under adverse conditions.

Emissions means air pollutants exhausted from a unit or source into the atmosphere, as measured, recorded, and reported to the Administrator by the NO_X authorized account representative and as determined by the Administrator in accordance with subpart H of this part.

Energy Information Administration means the Energy Information Administration of the United States Department of Energy.

Excess emissions means any tonnage of nitrogen oxides emitted by a NO_X Budget unit during a control period that exceeds the NO_X Budget emissions limitation for the unit.

Fossil fuel means natural gas, petroleum, coal, or any form of solid, liquid, or gaseous fuel derived from such material.

Fossil fuel fired means, with regard to a unit:

(1) For units that commenced operation before January 1, 1996, the combustion of fossil fuel, alone or in combination with any other fuel, where fossil fuel actually combusted comprises more than 50 percent of the annual heat input on a Btu basis during 1995, or, if a unit had no heat input in 1995, during the last year of operation of the unit prior to 1995;

(2) For units that commenced operation on or after January 1, 1996 and before January 1, 1997, the combustion of fossil fuel, alone or in combination with any other fuel, where fossil fuel actually combusted comprises more than 50 percent of the annual heat input on a Btu basis during 1996; or

(3) For units that commence operation on or after January 1, 1997:

(i) The combination of fossil fuel, alone or in combustion with any other fuel, where fossil fuel actually combusted comprises more than 50 percent of the annual heat input on a Btu basis during any year; or

(ii) The combination of fossil fuel, alone or in combination with any other fuel, where fossil fuel is projected to comprise more than 50 percent of the annual heat input on a Btu basis during any year, provided that the unit shall be ''fossil fuel-fired'' as of the date, during such year, on which the unit begins combusting fossil fuel.

General account means a NO_X Allowance Tracking System account, established under subpart F of this part, that is not a compliance account or an overdraft account.

Generator means a device that produces electricity.

Heat input means, with regard to a specified period to time, the product

(in mmBtu/time) of the gross calorific value of the fuel (in Btu/lb) divided by 1,000,000 Btu/mmBtu and multiplied by the fuel feed rate into a combustion device (in lb of fuel/time), as measured, recorded, and reported to the Administrator by the NO_X authorized account representative and as determined by the Administrator in accordance with subpart H of this part. Heat input does not include the heat derived from preheated combustion air, recirculated flue gases, or exhaust from other sources.

Heat input rate means the amount of heat input (in mmBtu) divided by unit operating time (in hr) or, with regard to a specific fuel, the amount of heat input attributed to the fuel (in mmBtu) divided by the unit operating time (in hr) during which the unit combusts the fuel.

Life-of-the-unit, firm power contractual arrangement means a unit participation power sales agreement under which a utility or industrial customer reserves, or is entitled to receive, a specified amount or percentage of nameplate capacity and associated energy from any specified unit and pays its proportional amount of such unit's total costs, pursuant to a contract:

(1) For the life of the unit;

(2) For a cumulative term of no less than 30 years, including contracts that permit an election for early termination; or

(3) For a period equal to or greater than 25 years or 70 percent of the economic useful life of the unit determined as of the time the unit is built, with option rights to purchase or release some portion of the nameplate capacity and associated energy generated by the unit at the end of the period.

Maximum design heat input means the ability of a unit to combust a stated maximum amount of fuel per hour (in mmBtu/hr) on a steady state basis, as determined by the physical design and physical characteristics of the unit.

Maximum potential hourly heat input means an hourly heat input (in mmBtu/hr) used for reporting purposes when a unit lacks certified monitors to report heat input. If the unit intends to use appendix D of part 75 of this chapter to report heat input, this value should be calculated, in accordance with part 75 of this chapter, using the maximum fuel flow rate and the maximum gross calorific value. If the unit intends to use a flow monitor and a diluent gas monitor, this value should be reported, in accordance with part 75 of this chapter, using the maximum potential flowrate and either the maximum carbon dioxide concentration (in percent CO_2) or the minimum oxygen concentration (in percent O2).

Maximum potential NO_X emission rate means the emission rate of nitrogen oxides (in lb/mmBtu) calculated in accordance with section 3 of appendix F of part 75 of this chapter, using the maximum potential concentration of NO_X under section 2 of appendix A of part 75 of this chapter, and either the maximum oxygen concentration (in percent O2) or the minimum carbon dioxide concentration (in percent CO_2), under all operating conditions of the unit except for unit start up, shutdown, and upsets.

Maximum rated hourly heat input means a unit specific maximum hourly heat input (in mmBtu/hr) which is the higher of the manufacturer's maximum rated hourly heat input or the highest observed hourly heat input.

Monitoring system means any monitoring system that meets the requirements of subpart H of this part, including a continuous emissions monitoring system, an excepted monitoring system, or an alternative monitoring system.

Most stringent State or Federal NO_X emissions limitation means the lowest NO_X emissions limitation (in lb/mmBtu) that is applicable to the unit under State or Federal law, regardless of the averaging period to which the emissions limitation applies.

Nameplate capacity means the maximum electrical generating output (in MWe) that a generator can sustain over a specified period of time when not restricted by seasonal or other deratings as measured in accordance with the United States Department of Energy standards.

Non-title V permit means a federally enforceable permit administered by the permitting authority pursuant to the Clean Air Act and regulatory authority under the Clean Air Act, other than

title V of the Clean Air Act and part 70 or 71 of this chapter.

NO_X allowance means a limited authorization by the Administrator under the NO_X Budget Trading Program to emit up to one ton of nitrogen oxides during the control period of the specified year or of any year thereafter, except as provided under §97.54(f). No provision of the NO_X Budget Trading Program, the NO_X Budget permit application, the NO_X Budget permit, or an exemption under §97.4(b) or §97.5 and no provision of law shall be construed to limit the authority of the United States to terminate or limit such authorization, which does not constitute a property right. For purposes of all sections of this part except §97.40, §97.41, §97.42, §97.43, or §97.88, ''NO_X allowance'' also includes an authorization to emit up to one ton of nitrogen oxides during the control period of the specified year or of any year thereafter by the permitting authority or the Administrator in accordance with a State NO_X Budget Trading Program established, and approved and administered by the Administrator, pursuant to §51.121 of this chapter.

NO_X allowance deduction or *deduct NO_X allowances* means the permanent withdrawal of NO_X allowances by the Administrator from a NO_X Allowance Tracking System compliance account or overdraft account to account for the number of tons of NO_X emissions from a NO_X Budget unit for a control period, determined in accordance with subparts H and F of this part, or for any other NO_X allowance withdrawal requirement under this part.

NO_X Allowance Tracking System means the system by which the Administrator records allocations, deductions, and transfers of NO_X allowances under the NO_X Budget Trading Program.

NO_X Allowance Tracking System account means an account in the NO_X Allowance Tracking System established by the Administrator for purposes of recording the allocation, holding, transferring, or deducting of NO_X allowances.

NO_X allowance transfer deadline means midnight of November 30 or, if November 30 is not a business day, midnight of the first business day thereafter and is the deadline by which NO_X allowances must be submitted for recordation in a NO_X Budget unit's compliance account, or the overdraft account of the source where the unit is located, in order to meet the unit's NO_X Budget emissions limitation for the control period immediately preceding such deadline.

NO_X allowances held or *hold NO_X allowances* means the NO_X allowances recorded by the Administrator, or submitted to the Administrator for recordation, in accordance with subparts F and G of this part, in a NO_X Allowance Tracking System account.

NO_X authorized account representative means, for a NO_X Budget source or NO_X Budget unit at the source, the natural person who is authorized by the owners and operators of the source and all NO_X Budget units at the source, in accordance with subpart B of this part, to represent and legally bind each owner and operator in matters pertaining to the NO_X Budget Trading Program or, for a general account, the natural person who is authorized, in accordance with subpart F of this part, to transfer or otherwise dispose of NO_X allowances held in the general account.

NO_X Budget emissions limitation means, for a NO_X Budget unit, the tonnage equivalent of the NO_X allowances available for compliance deduction for the unit under §97.54(a), (b), (e), and (f) in a control period adjusted by deductions of such NO_X allowances to account for actual heat input under §97.42(e) for the control period or to account for excess emissions for a prior control period under §97.54(d) or to account for withdrawal from the NO_X Budget Trading Program, or for a change in regulatory status, of a NO_X Budget opt-in unit under §97.86 or §97.87.

NO_X Budget opt-in permit means a NO_X Budget permit covering a NO_X Budget opt-in unit.

NO_X Budget opt-in unit means a unit that has been elected to become a NO_X Budget unit under the NO_X Budget Trading Program and whose NO_X Budget opt-in permit has been issued and is in effect under subpart I of this part.

NO_X Budget permit means the legally binding and federally enforceable written document, or portion of such document, issued by the permitting authority under this part, including any permit revisions, specifying the NO_X Budget Trading Program requirements applicable to a NO_X Budget source, to each NO_X Budget unit at the NO_X Budget source, and to the owners and operators and the NO_X authorized account representative of the NO_X Budget source and each NO_X Budget unit.

NO_X Budget source means a source that includes one or more NO_X Budget units.

NO_X Budget Trading Program means a multistate nitrogen oxides air pollution control and emission reduction program established by the Administrator in accordance with this part and pursuant to § 52.34 of this chapter, as a means of mitigating the interstate transport of ozone and nitrogen oxides, an ozone precursor.

NO_X Budget unit means a unit that is subject to the NO_X Budget emissions limitation under § 97.4(a) or § 97.80.

Operating means, with regard to a unit under §§ 97.22(d)(2) and 97.80, having documented heat input for more than 876 hours in the 6 months immediately preceding the submission of an application for an initial NO_X Budget permit under § 97.83(a). The unit's documented heat input will be determined in accordance with part 75 of this chapter if the unit was otherwise subject to the requirements of part 75 of this chapter during that 6-month period or will be based on the best available data reported to the Administrator for the unit if the unit was not otherwise subject to the requirements of part 75 of this chapter during that 6-month period.

Operator means any person who operates, controls, or supervises a NO_X Budget unit, a NO_X Budget source, or a unit for which an application for a NO_X Budget opt-in permit under § 97.83 is submitted and not denied or withdrawn and shall include, but not be limited to, any holding company, utility system, or plant manager of such a unit or source.

Opt-in means to be elected to become a NO_X Budget unit under the NO_X Budget Trading Program through a final, effective NO_X Budget opt-in permit under subpart I of this part.

Overdraft account means the NO_X Allowance Tracking System account, established by the Administrator under subpart F of this part, for each NO_X Budget source where there are two or more NO_X Budget units.

Owner means any of the following persons:

(1) Any holder of any portion of the legal or equitable title in a NO_X Budget unit or in a unit for which an application for a NO_X Budget opt-in permit under § 97.83 is submitted and not denied or withdrawn; or

(2) Any holder of a leasehold interest in a NO_X Budget unit or in a unit for which an application for a NO_X Budget opt-in permit under § 97.83 is submitted and not denied or withdrawn; or

(3) Any purchaser of power from a NO_X Budget unit or from a unit for which an application for a NO_X Budget opt-in permit under § 97.83 is submitted and not denied or withdrawn under a life-of-the-unit, firm power contractual arrangement. However, unless expressly provided for in a leasehold agreement, owner shall not include a passive lessor, or a person who has an equitable interest through such lessor, whose rental payments are not based, either directly or indirectly, upon the revenues or income from the NO_X Budget unit or the unit for which an application for a NO_X Budget opt-in permit under § 97.83 is submitted and not denied or withdrawn; or

(4) With respect to any general account, any person who has an ownership interest with respect to the NO_X allowances held in the general account and who is subject to the binding agreement for the NO_X authorized account representative to represent that person's ownership interest with respect to the NO_X allowances.

Percent monitor data availability means, for purposes of § 97.43 (a)(1) and § 97.84(b), total unit operating hours for which quality-assured data were recorded under subpart H of this part in a control period, divided by the total number of unit operating hours in the control period, and multiplied by 100 percent.

Permitting authority means the State air pollution control agency, local

agency, other State agency, or other agency authorized by the Administrator to issue or revise permits to meet the requirements of the NO_X Budget Trading Program in accordance with subpart C of this part.

Potential electrical output capacity means 33 percent of a unit's maximum design heat input.

Receive or receipt of means, when referring to the permitting authority or the Administrator, to come into possession of a document, information, or correspondence (whether sent in writing or by authorized electronic transmission), as indicated in an official correspondence log, or by a notation made on the document, information, or correspondence, by the permitting authority or the Administrator in the regular course of business.

Recordation, record, or recorded means, with regard to NO_X allowances, the movement of NO_X allowances by the Administrator from one NO_X Allowance Tracking System account to another, for purposes of allocation, transfer, or deduction.

Reference method means any direct test method of sampling and analyzing for an air pollutant as specified in appendix A of part 60 of this chapter.

Serial number means, when referring to NO_X allowances, the unique identification number assigned to each NO_X allowance by the Administrator, under §97.53(c).

Source means any governmental, institutional, commercial, or industrial structure, installation, plant, building, or facility that emits or has the potential to emit any regulated air pollutant under the Clean Air Act. For purposes of section 502(c) of the Clean Air Act, a ''source,'' including a ''source'' with multiple units, shall be considered a single ''facility.''

State means one of the 48 contiguous States or a portion thereof or the District of Columbia that is specified in §52.34 of this chapter and in which are located units for which the Administrator makes an effective finding under §52.34 of this chapter.

Submit or *serve* means to send or transmit a document, information, or correspondence to the person specified in accordance with the applicable regulation:

(1) In person;

(2) By United States Postal Service; or

(3) By other means of dispatch or transmission and delivery. Compliance with any ''submission,'' ''service,'' or ''mailing'' deadline shall be determined by the date of dispatch, transmission, or mailing and not the date of receipt.

Title V operating permit means a permit issued under title V of the Clean Air Act and part 70 or part 71 of this chapter.

Title V operating permit regulations means the regulations that the Administrator has approved or issued as meeting the requirements of title V of the Clean Air Act and part 70 or 71 of this chapter.

Ton or *tonnage* means any ''short ton'' (i.e., 2,000 pounds). For the purpose of determining compliance with the NO_X Budget emissions limitation, total tons for a control period shall be calculated as the sum of all recorded hourly emissions (or the tonnage equivalent of the recorded hourly emissions rates) in accordance with subpart H of this part, with any remaining fraction of a ton equal to or greater than 0.50 ton deemed to equal one ton and any fraction of a ton less than 0.50 ton deemed to equal zero tons.

Unit means a fossil fuel-fired stationary boiler, combustion turbine, or combined cycle system.

Unit operating day means a calendar day in which a unit combusts any fuel.

Unit operating hour or *hour of unit operation* means any hour (or fraction of an hour) during which a unit combusts any fuel.

[65 FR 2727, Jan. 18, 2000, as amended at 69 FR 21645, Apr. 21, 2004]

§97.3 Measurements, abbreviations, and acronyms.

Measurements, abbreviations, and acronyms used in this part are defined as follows:

Btu-British thermal unit.
CO_2-carbon dioxide.
hr-hour.
kW-kilowatt electrical.
kWh-kilowatt hour.
lb-pounds.
mmBtu-million Btu.
MWe-megawatt electrical.
NO_X-nitrogen oxides.
O_2-oxygen.

ton-2000 pounds.

§ 97.4 Applicability.

(a) The following units in a State shall be a NO_X Budget unit, and any source that includes one or more such units shall be a NO_X Budget source, subject to the requirements of this part:

(1)(i) For units other than cogeneration units—

(A) For units commencing operation before January 1, 1997, a unit serving during 1995 or 1996 a generator—

(*1*) With a nameplate capacity greater than 25 MWe and

(*2*) Producing electricity for sale under a firm contract to the electric grid.

(B) For units commencing operation in 1997 or 1998, a unit serving during 1997 or 1998 a generator—

(*1*) With a nameplate capacity greater than 25 MWe and

(*2*) Producing electricity for sale under a firm contract to the electric grid.

(C) For units commencing operation on or after January 1, 1999, a unit serving at any time a generator—

(*1*) With a nameplate capacity greater than 25 MWe and

(*2*) Producing electricity for sale.

(ii) For cogeneration units—

(A) For units commencing operation before January 1, 1997, a unit serving during 1995 or 1996 a generator with a nameplate capacity greater than 25 MWe and failing to qualify as an unaffected unit under § 72.6(b)(4) of this chapter for 1995 or 1996 under the Acid Rain Program.

(B) For units commencing operation in 1997 or 1998, a unit serving during 1997 or 1998 a generator with a nameplate capacity grater than 25 MWe and failing to qualify as an unaffected unit under § 72.6(b)(4) of this chapter for 1997 or 1998 under the Acid Rain Program.

(C) For units commencing operation on or after January 1, 1999, a unit serving at any time a generator with a nameplate capacity greater than 25 MWe and failing to qualify as an unaffected unit under § 72.6(b)(4) of this chapter under the Acid Rain Program for any year.

(2)(i) For units other than cogeneration units—

(A) For units commencing operation before January 1, 1997, a unit—

(*1*) With a maximum design heat input greater than 250 mmBtu/hr and

(*2*) Not serving during 1995 or 1996 a generator producing electricity for sale under a firm contract to the electric grid.

(B) For units commencing operation in 1997 or 1998, a unit—

(*1*) With a maximum design heat input greater than 250 mmBtu/hr and

(*2*) Not serving during 1997 or 1998 a generator producing electricity for sale under a firm contract to the electric grid.

(C) For units commencing on or after January 1, 1999, a unit with a maximum design heat input greater than 250 mmBtu/hr:

(*1*) At no time serving a generator producing electricity for sale; or

(*2*) At any time serving a generator with a nameplate capacity of 25 MWe or less producing electricity for sale and with the potential to use no more than 50 percent of the potential electrical output capacity of the unit.

(ii) For cogeneration units—

(A) For units commencing operation before January 1, 1997, a unit with a maximum design heat input greater than 250 mmBtu/hr and qualifying as an unaffected unit under § 72.6(b)(4) of this chapter under the Acid Rain Program for 1995 and 1996.

(B) For units commencing operation in 1997 or 1998, a unit with a maximum design heat input greater than 250 mmBtu/hr and qualifying as an unaffected unit under § 72.6(b)(4) under the Acid Rain Program for 1997 and 1998.

(C) For units commencing on or after January 1, 1999, a unit with a maximum design heat input greater than 250 mmBtu/hr and qualifying as an unaffected unit under § 72.6(b)(4) of this chapter under the Acid Rain Program for each year.

(b)(1) Notwithstanding paragraph (a) of this section, a unit under paragraph (a)(1) or (a)(2) of this section that has a federally enforceable permit that restricts the unit to combusting only natural gas or fuel oil (as defined in § 75.2 of this chapter) during a control period includes a NO_X emission limitation restricting NO_X emissions during a

control period to 25 tons or less, and includes the special provisions in paragraph (b)(4) of this section shall be exempt from the requirements of the NO_X Budget Trading Program, except for the provisions of this paragraph (b), §97.2, §97.3, §97.4(a), §97.7, and subparts E, F, and G of this part. The NO_X emission limitation under this paragraph (b)(1) shall restrict NO_X emissions during the control period by limiting unit operating hours. The restriction on unit operating hours shall be calculated by dividing 25 tons by the unit's maximum potential hourly NO_X mass emissions, which shall equal the unit's maximum rated hourly heat input multiplied by the highest default NO_X emission rate otherwise applicable to the unit under §75.19 of this chapter.

(2) The exemption under paragraph (b)(1) of this section shall become effective as follows:

(i) The exemption shall become effective on the date on which the NO_X emission limitation and the special provisions in the permit under paragraph (b)(1) of this section become final; or

(ii) If the NO_X emission limitation and the special provisions in the permit under paragraph (b)(1) of this section become final during a control period and after the first date on which the unit operates during such control period, then the exemption shall become effective on May 1 of such control period, provided that such NO_X emission limitation and the special provisions apply to the unit as of such first date of operation. If such NO_X emission limitation and special provisions do not apply to the unit as of such first date of operation, then the exemption under paragraph (b)(1) of this section shall become effective on October 1 of the year during which such NO_X emission limitation and the special provisions become final.

(3) The permitting authority that issues a federally enforceable permit under paragraph (b)(1) of this section for a unit under paragraph (a)(1) or (a)(2) of this section will provide the Administrator written notice of the issuance of such permit and, upon request, a copy of the permit.

(4) *Special provisions.* (i) A unit exempt under paragraph (b)(1) of this section shall comply with the restriction on fuel use and unit operating hours described in paragraph (b)(1) of this section during the control period in each year.

(ii) The Administrator will allocate NO_X allowances to the unit under §§97.41(a) through (c) and 97.42(a) through (c). For each control period for which the unit is allocated NO_X allowances under §§97.41(a) through (c) and 97.42(a) through (c):

(A) The owners and operators of the unit must specify a general account, in which the Administrator will record the NO_X allowances; and

(B) After the Administrator records a NO_X allowance allocations under §§97.41(a) through (c) and 97.42(a) through (c), the Administrator will deduct, from the general account under paragraph (b)(4)(ii)(A) of this section, NO_X allowances that are allocated for the same or a prior control period as the NO_X allowances allocated to the unit under §§97.41(a) through (c) and 97.42(a) through (c) and that equal the NO_X emission limitation (in tons of NO_X) on which the unit's exemption under paragraph (b)(1) of this section is based. The NO_X authorized account representative shall ensure that such general account contains the NO_X allowances necessary for completion of such deduction.

(iii) A unit exempt under this paragraph (b) shall report hours of unit operation during the control period in each year to the permitting authority by November 1 of that year.

(iv) For a period of 5 years from the date the records are created, the owners and operators of a unit exempt under paragraph (b)(1) of this section shall retain, at the source that includes the unit, records demonstrating that the conditions of the federally enforceable permit under paragraph (b)(1) of this section were met, including the restriction on fuel use or unit operating hours. The 5-year period for keeping records may be extended for cause, at any time prior to the end of the period, in writing by the permitting authority or the Administrator. The owners and operators bear the burden of proof that the unit met the restriction on fuel use or unit operating hours.

(v) The owners and operators and, to the extent applicable, the NO_X authorized account representative of a unit exempt under paragraph (b)(1) of this section shall comply with the requirements of the NO_X Budget Trading Program concerning all periods for which the exemption is not in effect, even if such requirements arise, or must be complied with, after the exemption takes effect.

(vi) On the earlier of the following dates, a unit exempt under paragraph (b)(1) of this section shall lose its exemption:

(A) The date on which the restriction on fuel use or unit operating hours described in paragraph (b)(1) of this section is removed from the unit's federally enforceable permit or otherwise becomes no longer applicable to any control period starting in 2004; or

(B) The first date on which the unit fails to comply, or with regard to which the owners and operators fail to meet their burden of proving that the unit is complying, with the restriction on fuel use or unit operating hours described in paragraph (b)(1) of this section during any control period starting in 2004.

(vii) A unit that loses its exemption in accordance with paragraph (b)(4)(vi) of this section shall be subject to the requirements of this part. For the purpose of applying permitting requirements under subpart C of this part, allocating allowances under subpart E of this part, and applying monitoring requirements under subpart H of this part, the unit shall be treated as commencing operation and, if the unit is covered by paragraph (a)(1) of this section, commencing commercial operation on the date the unit loses its exemption.

(viii) A unit that is exempt under paragraph (b)(1) of this section is not eligible to be a NO_X Budget opt-in unit under subpart I of this part.

[65 FR 2727, Jan. 18, 2000, as amended at 67 FR 21529, Apr. 30, 2002; 69 FR 21645, Apr. 21, 2004]

§ 97.5 Retired unit exemption.

(a) This section applies to any NO_X Budget unit, other than a NO_X Budget opt-in unit, that is permanently retired.

(b)(1) Any NO_X Budget unit, other than a NO_X Budget opt-in unit, that is permanently retired shall be exempt from the NO_X Budget Trading Program, except for the provisions of this section, § 97.2, § 97.3, § 97.4, § 97.7, and subparts E, F, and G of this part.

(2) The exemption under paragraph (b)(1) of this section shall become effective the day on which the unit is permanently retired. Within 30 days of permanent retirement, the NO_X authorized account representative (authorized in accordance with subpart B of this part) shall submit a statement to the permitting authority otherwise responsible for administering any NO_X Budget permit for the unit. The NO_X authorized account representative shall submit a copy of the statement to the Administrator. The statement shall state, in a format prescribed by the permitting authority, that the unit is permanently retired and will comply with the requirements of paragraph (c) of this section.

(3) After receipt of the notice under paragraph (b)(2) of this section, the permitting authority will amend any permit covering the source at which the unit is located to add the provisions and requirements of the exemption under paragraphs (b)(1) and (c) of this section.

(c) *Special provisions.* (1) A unit exempt under this section shall not emit any nitrogen oxides, starting on the date that the exemption takes effect.

(2) The Administrator will allocate NO_X allowances under subpart E of this part to a unit exempt under this section. For each control period for which the unit is allocated one or more NO_X allowances, the owners and operators of the unit shall specify a general account, in which the Administrator will record such NO_X allowances.

(3) For a period of 5 years from the date the records are created, the owners and operators of a unit exempt under this section shall retain at the source that includes the unit, records demonstrating that the unit is permanently retired. The 5-year period for keeping records may be extended for cause, at any time prior to the end of the period, in writing by the permitting authority or the Administrator.

The owners and operators bear the burden of proof that the unit is permanently retired.

(4) The owners and operators and, to the extent applicable, the NO_X authorized account representative of a unit exempt under this section shall comply with the requirements of the NO_X Budget Trading Program concerning all periods for which the exemption is not in effect, even if such requirements arise, or must be complied with, after the exemption takes effect.

(5)(i) A unit exempt under this section and located at a source that is required, or but for this exemption would be required, to have a title V operating permit shall not resume operation unless the NO_X authorized account representative of the source submits a complete NO_X Budget permit application under §97.22 for the unit not less than 18 months (or such lesser time provided by the permitting authority) before the later of May 31, 2004 or the date on which the unit resumes operation.

(ii) A unit exempt under this section and located at a source that is required, or but for this exemption would be required, to have a non-title V permit shall not resume operation unless the NO_X authorized account representative of the source submits a complete NO_X Budget permit application under §97.22 for the unit not less than 18 months (or such lesser time provided by the permitting authority) before the later of May 31, 2004 or the date on which the unit is to first resume operation.

(6) On the earlier of the following dates, a unit exempt under paragraph (b) of this section shall lose its exemption:

(i) The date on which the NO_X authorized account representative submits a NO_X Budget permit application under paragraph (c)(5) of this section;

(ii) The date on which the NO_X authorized account representative is required under paragraph (c)(5) of this section to submit a NO_X Budget permit application; or

(iii) The date on which the unit resumes operation, if the unit is not required to submit a NO_X permit application.

(7) For the purpose of applying monitoring requirements under subpart H of this part, a unit that loses its exemption under this section shall be treated as a unit that commences operation or commercial operation on the first date on which the unit resumes operation.

(8) A unit that is exempt under this section is not eligible to be a NO_X Budget opt-in unit under subpart I of this part.

[65 FR 2727, Jan. 18, 2000, as amended at 67 FR 21529, Apr. 30, 2002; 69 FR 21646, Apr. 21, 2004]

§97.6 Standard requirements.

(a) *Permit requirements.* (1) The NO_X authorized account representative of each NO_X Budget source required to have a federally enforceable permit and each NO_X Budget unit required to have a federally enforceable permit at the source shall:

(i) Submit to the permitting authority a complete NO_X Budget permit application under §97.22 in accordance with the deadlines specified in §97.21(b) and (c);

(ii) Submit in a timely manner any supplemental information that the permitting authority determines is necessary in order to review a NO_X Budget permit application and issue or deny a NO_X Budget permit.

(2) The owners and operators of each NO_X Budget source required to have a federally enforceable permit and each NO_X Budget unit required to have a federally enforceable permit at the source shall have a NO_X Budget permit issued by the permitting authority and operate the unit in compliance with such NO_X Budget permit.

(3) The owners and operators of a NO_X Budget source that is not otherwise required to have a federally enforceable permit are not required to submit a NO_X Budget permit application, and to have a NO_X Budget permit, under subpart C of this part for such NO_X Budget source.

(b) *Monitoring requirements.* (1) The owners and operators and, to the extent applicable, the NO_X authorized account representative of each NO_X Budget source and each NO_X Budget unit at the source shall comply with the monitoring requirements of subpart H of this part.

(2) The emissions measurements recorded and reported in accordance with subpart H of this part shall be used to determine compliance by the unit with the NO_X Budget emissions limitation under paragraph (c) of this section.

(c) *Nitrogen oxides requirements.* (1) The owners and operators of each NO_X Budget source and each NO_X Budget unit at the source shall hold NO_X allowances available for compliance deductions under § 97.54(a), (b), (e), or (f) as of the NO_X allowance transfer deadline, in the unit's compliance account and the source's overdraft account in an amount not less than the total NO_X emissions for the control period from the unit, as determined in accordance with subpart H of this part, plus any amount necessary to account for actual heat input under § 97.42(e) for the control period or to account for excess emissions for a prior control period under § 97.54(d) or to account for withdrawal from the NO_X Budget Trading Program, or a change in regulatory status, of a NO_X Budget opt-in unit under § 97.86 or § 97.87.

(2) Each ton of nitrogen oxides emitted in excess of the NO_X Budget emissions limitation shall constitute a separate violation of this part, the Clean Air Act, and applicable State law.

(3) A NO_X Budget unit shall be subject to the requirements under paragraph (c)(1) of this section starting on the later of May 31, 2004 or the date on which the unit commences operation.

(4) NO_X allowances shall be held in, deducted from, or transferred among NO_X Allowance Tracking System accounts in accordance with subparts E, F, G, and I of this part.

(5) A NO_X allowance shall not be deducted, in order to comply with the requirements under paragraph (c)(1) of this section, for a control period in a year prior to the year for which the NO_X allowance was allocated.

(6) A NO_X allowance allocated by the Administrator under the NO_X Budget Trading Program is a limited authorization to emit one ton of nitrogen oxides in accordance with the NO_X Budget Trading Program. No provision of the NO_X Budget Trading Program, the NO_X Budget permit application, the NO_X Budget permit, or an exemption under § 97.4(b) or § 97.5 and no provision of law shall be construed to limit the authority of the United States to terminate or limit such authorization.

(7) A NO_X allowance allocated by the Administrator under the NO_X Budget Trading Program does not constitute a property right.

(8) Upon recordation by the Administrator under subpart F or G of this part, every allocation, transfer, or deduction of a NO_X allowance to or from a NO_X Budget unit's compliance account or the overdraft account of the source where the unit is located is incorporated automatically in any NO_X Budget permit of the NO_X Budget unit.

(d) *Excess emissions requirements.* (1) The owners and operators of a NO_X Budget unit that has excess emissions in any control period shall:

(i) Surrender the NO_X allowances required for deduction under § 97.54(d)(1); and

(ii) Pay any fine, penalty, or assessment or comply with any other remedy imposed under § 97.54(d)(3).

(e) *Recordkeeping and reporting requirements.* (1) Unless otherwise provided, the owners and operators of the NO_X Budget source and each NO_X Budget unit at the source shall keep on site at the source each of the following documents for a period of 5 years from the date the document is created. This period may be extended for cause, at any time prior to the end of 5 years, in writing by the permitting authority or the Administrator.

(i) The account certificate of representation under § 97.13 for the NO_X authorized account representative for the source and each NO_X Budget unit at the source and all documents that demonstrate the truth of the statements in the account certificate of representation; provided that the certificate and documents shall be retained on site at the source beyond such 5-year period until such documents are superseded because of the submission of a new account certificate of representation under § 97.13 changing the NO_X authorized account representative.

(ii) All emissions monitoring information, in accordance with subpart H of this part; provided that to the extent that subpart H of this part provides for a 3-year period for recordkeeping, the 3-year period shall apply.

(iii) Copies of all reports, compliance certifications, and other submissions and all records made or required under the NO_X Budget Trading Program.

(iv) Copies of all documents used to complete a NO_X Budget permit application and any other submission under the NO_X Budget Trading Program or to demonstrate compliance with the requirements of the NO_X Budget Trading Program.

(2) The NO_X authorized account representative of a NO_X Budget source and each NO_X Budget unit at the source shall submit the reports and compliance certifications required under the NO_X Budget Trading Program, including those under subpart D, H, or I of this part.

(f) *Liability*. (1) Any person who knowingly violates any requirement or prohibition of the NO_X Budget Trading Program, a NO_X Budget permit, or an exemption under §97.4(b) or §97.5 shall be subject to enforcement pursuant to applicable State or Federal law.

(2) Any person who knowingly makes a false material statement in any record, submission, or report under the NO_X Budget Trading Program shall be subject to criminal enforcement pursuant to the applicable State or Federal law.

(3) No permit revision shall excuse any violation of the requirements of the NO_X Budget Trading Program that occurs prior to the date that the revision takes effect.

(4) Each NO_X Budget source and each NO_X Budget unit shall meet the requirements of the NO_X Budget Trading Program.

(5) Any provision of the NO_X Budget Trading Program that applies to a NO_X Budget source or the NO_X authorized account representative of a NO_X Budget source shall also apply to the owners and operators of such source and of the NO_X Budget units at the source.

(6) Any provision of the NO_X Budget Trading Program that applies to a NO_X Budget unit or the NO_X authorized account representative of a NO_X budget unit shall also apply to the owners and operators of such unit. Except with regard to the requirements applicable to units with a common stack under subpart H of this part, the owners and operators and the NO_X authorized account representative of one NO_X Budget unit shall not be liable for any violation by any other NO_X Budget unit of which they are not owners or operators or the NO_X authorized account representative and that is located at a source of which they are not owners or operators or the NO_X authorized account representative.

(g) *Effect on other authorities*. No provision of the NO_X Budget Trading Program, a NO_X Budget permit application, a NO_X Budget permit, or an exemption under §97.4(b) or §97.5 shall be construed as exempting or excluding the owners and operators and, to the extent applicable, the NO_X authorized account representative of a NO_X Budget source or NO_X Budget unit from compliance with any other provision of the applicable, approved State implementation plan, a federally enforceable permit, or the Clean Air Act.

[65 FR 2727, Jan. 18, 2000, as amended at 67 FR 21529, Apr. 30, 2002]

§97.7 Computation of time.

(a) Unless otherwise stated, any time period scheduled, under the NO_X Budget Trading Program, to begin on the occurrence of an act or event shall begin on the day the act or event occurs.

(b) Unless otherwise stated, any time period scheduled, under the NO_X Budget Trading Program, to begin before the occurrence of an act or event shall be computed so that the period ends the day before the act or event occurs.

(c) Unless otherwise stated, if the final day of any time period, under the NO_X Budget Trading Program, falls on a weekend or a State or Federal holiday, the time period shall be extended to the next business day.

Subpart B—NO_X Authorized Account Representative for NO_X Budget Sources

§97.10 Authorization and responsibilities of NO_X authorized account representative.

(a) Except as provided under §97.11, each NO_X Budget source, including all NO_X Budget units at the source, shall have one and only one NO_X authorized account representative, with regard to

all matters under the NO_X Budget Trading Program concerning the source or any NO_X Budget unit at the source.

(b) The NO_X authorized account representative of the NO_X Budget source shall be selected by an agreement binding on the owners and operators of the source and all NO_X Budget units at the source.

(c) Upon receipt by the Administrator of a complete account certificate of representation under § 97.13, the NO_X authorized account representative of the source shall represent and, by his or her representations, actions, inactions, or submissions, legally bind each owner and operator of the NO_X Budget source represented and each NO_X Budget unit at the source in all matters pertaining to the NO_X Budget Trading Program, not withstanding any agreement between the NO_X authorized account representative and such owners and operators. The owners and operators shall be bound by any decision or order issued to the NO_X authorized account representative by the permitting authority, the Administrator, or a court regarding the source or unit.

(d) No NO_X Budget permit shall be issued, and no NO_X Allowance Tracking System account shall be established for a NO_X Budget unit at a source, until the Administrator has received a complete account certificate of representation under § 97.13 for a NO_X authorized account representative of the source and the NO_X Budget units at the source.

(e) (1) Each submission under the NO_X Budget Trading Program shall be submitted, signed, and certified by the NO_X authorized account representative for each NO_X Budget source on behalf of which the submission is made. Each such submission shall include the following certification statement by the NO_X authorized account representative: ''I am authorized to make this submission on behalf of the owners and operators of the NO_X Budget sources or NO_X Budget units for which the submission is made. I certify under penalty of law that I have personally examined, and am familiar with, the statements and information submitted in this document and all its attachments. Based on my inquiry of those individuals with primary responsibility for obtaining the information, I certify that the statements and information are to the best of my knowledge and belief true, accurate, and complete. I am aware that there are significant penalties for submitting false statements and information or omitting required statements and information, including the possibility of fine or imprisonment.''

(2) The permitting authority and the Administrator will accept or act on a submission made on behalf of owner or operators of a NO_X Budget source or a NO_X Budget unit only if the submission has been made, signed, and certified in accordance with paragraph (e)(1) of this section.

§ 97.11 Alternate NO_X authorized account representative.

(a) An account certificate of representation may designate one and only one alternate NO_X authorized account representative who may act on behalf of the NO_X authorized account representative. The agreement by which the alternate NO_X authorized account representative is selected shall include a procedure for authorizing the alternate NO_X authorized account representative to act in lieu of the NO_X authorized account representative.

(b) Upon receipt by the Administrator of a complete account certificate of representation under § 97.13, any representation, action, inaction, or submission by the alternate NO_X authorized account representative shall be deemed to be a representation, action, inaction, or submission by the NO_X authorized account representative.

(c) Except in this section and §§ 97.10(a), 97.12, 97.13, and 97.51, whenever the term ''NO_X authorized account representative'' is used in this part, the term shall be construed to include the alternate NO_X authorized account representative.

§ 97.12 Changing NO_X authorized account representative and alternate NO_X authorized account representative; changes in owners and operators.

(a) *Changing NO_X authorized account representative.* The NO_X authorized account representative may be changed

at any time upon receipt by the Administrator of a superseding complete account certificate of representation under §97.13. Notwithstanding any such change, all representations, actions, inactions, and submissions by the previous NO_X authorized account representative prior to the time and date when the Administrator receives the superseding account certificate of representation shall be binding on the new NO_X authorized account representative and the owners and operators of the NO_X Budget source and the NO_X Budget units at the source.

(b) *Changing alternate NO_X authorized account representative.* The alternate NO_X authorized account representative may be changed at any time upon receipt by the Administrator of a superseding complete account certificate of representation under §97.13. Notwithstanding any such change, all representations, actions, inactions, and submissions by the previous alternate NO_X authorized account representative prior to the time and date when the Administrator receives the superseding account certificate of representation shall be binding on the new alternate NO_X authorized account representative and the owners and operators of the NO_X Budget source and the NO_X Budget units at the source.

(c) *Changes in owners and operators.* (1) In the event a new owner or operator of a NO_X Budget source or a NO_X Budget unit is not included in the list of owners and operators submitted in the account certificate of representation under §97.13, such new owner or operator shall be deemed to be subject to and bound by the account certificate of representation, the representations, actions, inactions, and submissions of the NO_X authorized account representative and any alternate NO_X authorized account representative of the source or unit, and the decisions, orders, actions, and inactions of the permitting authority or the Administrator, as if the new owner or operator were included in such list.

(2) Within 30 days following any change in the owners and operators of a NO_X Budget source or a NO_X Budget unit, including the addition of a new owner or operator, the NO_X authorized account representative or alternate NO_X authorized account representative shall submit a revision to the account certificate of representation under §97.13 amending the list of owners and operators to include the change.

§97.13 Account certificate of representation.

(a) A complete account certificate of representation for a NO_X authorized account representative or an alternate NO_X authorized account representative shall include the following elements in a format prescribed by the Administrator:

(1) Identification of the NO_X Budget source and each NO_X Budget unit at the source for which the account certificate of representation is submitted.

(2) The name, address, e-mail address (if any), telephone number, and facsimile transmission number (if any) of the NO_X authorized account representative and any alternate NO_X authorized account representative.

(3) A list of the owners and operators of the NO_X Budget source and of each NO_X Budget unit at the source.

(4) The following certification statement by the NO_X authorized account representative and any alternate NO_X authorized account representative: ''I certify that I was selected as the NO_X authorized account representative or alternate NO_X authorized account representative, as applicable, by an agreement binding on the owners and operators of the NO_X Budget source and each NO_X Budget unit at the source. I certify that I have all the necessary authority to carry out my duties and responsibilities under the NO_X Budget Trading Program on behalf of the owners and operators of the NO_X Budget source and of each NO_X Budget unit at the source and that each such owner and operator shall be fully bound by my representations, actions, inactions, or submissions and by any decision or order issued to me by the permitting authority, the Administrator, or a court regarding the source or unit.''

(5) The signature of the NO_X authorized account representative and any alternate NO_X authorized account representative and the dates signed.

(b) Unless otherwise required by the permitting authority or the Administrator, documents of agreement referred to in the account certificate of representation shall not be submitted to the permitting authority or the Administrator. Neither the permitting authority nor the Administrator shall be under any obligation to review or evaluate the sufficiency of such documents, if submitted.

§ 97.14 Objections concerning NO_X authorized account representative.

(a) Once a complete account certificate of representation under § 97.13 has been submitted and received, the permitting authority and the Administrator will rely on the account certificate of representation unless and until a superseding complete account certificate of representation under § 97.13 is received by the Administrator.

(b) Except as provided in § 97.12 (a) or (b), no objection or other communication submitted to the permitting authority or the Administrator concerning the authorization, or any representation, action, inaction, or submission of the NO_X authorized account representative shall affect any representation, action, inaction, or submission of the NO_X authorized account representative or the finality of any decision or order by the permitting authority or the Administrator under the NO_X Budget Trading Program.

(c) Neither the permitting authority nor the Administrator will adjudicate any private legal dispute concerning the authorization or any representation, action, inaction, or submission of any NO_X authorized account representative, including private legal disputes concerning the proceeds of NO_X allowance transfers.

Subpart C—Permits

§ 97.20 General NO_X Budget Trading Program permit requirements.

(a) For each NO_X Budget source required to have a federally enforceable permit, such permit shall include a NO_X Budget permit administered by the permitting authority for the federally enforceable permit.

(1) For NO_X Budget sources required to have a title V operating permit, the NO_X Budget portion of the title V permit shall be administered in accordance with the permitting authority's title V operating permits regulations promulgated under part 70 or 71 of this chapter, except as provided otherwise by this subpart or subpart I of this part.

(2) For NO_X Budget sources required to have a non-title V permit, the NO_X Budget portion of the non-title V permit shall be administered in accordance with the permitting authority's regulations promulgated to administer non-title V permits, except as provided otherwise by this subpart or subpart I of this part.

(b) Each NO_X Budget permit shall contain all applicable NO_X Budget Trading Program requirements and shall be a complete and segregable portion of the permit under paragraph (a) of this section.

§ 97.21 Submission of NO_X Budget permit applications.

(a) *Duty to apply*. The NO_X authorized account representative of any NO_X Budget source required to have a federally enforceable permit shall submit to the permitting authority a complete NO_X Budget permit application under § 97.22 by the applicable deadline in paragraph (b) of this section.

(b)(1) For NO_X Budget sources required to have a title V operating permit:

(i) For any source, with one or more NO_X Budget units under § 97.4(a) that commence operation before January 1, 2001, the NO_X authorized account representative shall submit a complete NO_X Budget permit application under § 97.22 covering such NO_X Budget units to the permitting authority at least 18 months (or such lesser time provided by the permitting authority) before May 31, 2004.

(ii) For any source, with any NO_X Budget unit under § 97.4(a) that commences operation on or after January 1, 2001, the NO_X authorized account representative shall submit a complete NO_X Budget permit application under § 97.22 covering such NO_X Budget unit to the permitting authority at least 18 months (or such lesser time provided by the permitting authority) before the later of May 31, 2004 or the date on

which the NO_X Budget unit commences operation.

(2) For NO_X Budget sources required to have a non-title V permit:

(i) For any source, with one or more NO_X Budget units under §97.4(a) that commence operation before January 1, 2001, the NO_X authorized account representative shall submit a complete NO_X Budget permit application under §97.22 covering such NO_X Budget units to the permitting authority at least 18 months (or such lesser time provided by the permitting authority) before May 31, 2004.

(ii) For any source, with any NO_X Budget unit under §97.4(a) that commences operation on or after January 1, 2001, the NO_X authorized account representative shall submit a complete NO_X Budget permit application under §97.22 covering such NO_X Budget unit to the permitting authority at least 18 months (or such lesser time provided by the permitting authority) before the later of May 31, 2004 or the date on which the NO_X Budget unit commences operation.

(c) *Duty to reapply*. (1) For a NO_X Budget source required to have a title V operating permit, the NO_X authorized account representative shall submit a complete NO_X Budget permit application under §97.22 for the NO_X Budget source covering the NO_X Budget units at the source in accordance with the permitting authority's title V operating permits regulations addressing operating permit renewal.

(2) For a NO_X Budget source required to have a non-title V permit, the NO_X authorized account representative shall submit a complete NO_X Budget permit application under §97.22 for the NO_X Budget source covering the NO_X Budget units at the source in accordance with the permitting authority's non-title V permits regulations addressing permit renewal.

[65 FR 2727, Jan. 18, 2000, as amended at 67 FR 21529, Apr. 30, 2002]

§97.22 Information requirements for NO_X Budget permit applications.

A complete NO_X Budget permit application shall include the following elements concerning the NO_X Budget source for which the application is submitted, in a format prescribed by the permitting authority:

(a) Identification of the NO_X Budget source, including plant name and the ORIS (Office of Regulatory Information Systems) or facility code assigned to the source by the Energy Information Administration, if applicable;

(b) Identification of each NO_X Budget unit at the NO_X Budget source and whether it is a NO_X Budget unit under §97.4(a) or under subpart I of this part;

(c) The standard requirements under §97.6; and

(d) For each NO_X Budget opt-in unit at the NO_X Budget source, the following certification statements by the NO_X authorized account representative:

(1) ''I certify that each unit for which this permit application is submitted under subpart I of this part is not a NO_X Budget unit under 40 CFR 97.4(a) and is not covered by an exemption under 40 CFR 97.4(b) or 97.5 that is in effect.''

(2) If the application is for an initial NO_X Budget opt-in permit, ''I certify that each unit for which this permit application is submitted under subpart I of 40 CFR part 97 is operating, as that term is defined under 40 CFR 97.2.''

§97.23 NO_X Budget permit contents.

(a) Each NO_X Budget permit will contain, in a format prescribed by the permitting authority, all elements required for a complete NO_X Budget permit application under §97.22.

(b) Each NO_X Budget permit is deemed to incorporate automatically the definitions of terms under §97.2 and, upon recordation by the Administrator under subpart F or G of this part, every allocation, transfer, or deduction of a NO_X allowance to or from the compliance accounts of the NO_X Budget units covered by the permit or the overdraft account of the NO_X Budget source covered by the permit.

§97.24 NO_X Budget permit revisions.

(a) For a NO_X Budget source with a title V operating permit, except as provided in §97.23(b), the permitting authority will revise the NO_X Budget permit, as necessary, in accordance with the permitting authority's title V operating permits regulations addressing permit revisions.

(b) For a NO_X Budget source with a non-title V permit, except as provided in § 97.23(b), the permitting authority will revise the NO_X Budget permit, as necessary, in accordance with the permitting authority's non-title V permits regulations addressing permit revisions.

Subpart D—Compliance Certification

§ 97.30 Compliance certification report.

(a) *Applicability and deadline.* For each control period in which one or more NO_X Budget units at a source are subject to the NO_X Budget emissions limitation, the NO_X authorized account representative of the source shall submit to the permitting authority and the Administrator by November 30 of that year, a compliance certification report for each source covering all such units.

(b) *Contents of report.* The NO_X authorized account representative shall include in the compliance certification report under paragraph (a) of this section the following elements, in a format prescribed by the Administrator, concerning each unit at the source and subject to the NO_X Budget emissions limitation for the control period covered by the report:

(1) Identification of each NO_X Budget unit;

(2) At the NO_X authorized account representative's option, the serial numbers of the NO_X allowances that are to be deducted from each unit's compliance account under § 97.54 for the control period;

(3) At the NO_X authorized account representative's option, for units sharing a common stack and having NO_X emissions that are not monitored separately or apportioned in accordance with subpart H of this part, the percentage of allowances that is to be deducted from each unit's compliance account under § 97.54(e); and

(4) The compliance certification under paragraph (c) of this section.

(c) *Compliance certification.* In the compliance certification report under paragraph (a) of this section, the NO_X authorized account representative shall certify, based on reasonable inquiry of those persons with primary responsibility for operating the source and the NO_X Budget units at the source in compliance with the NO_X Budget Trading Program, whether each NO_X Budget unit for which the compliance certification is submitted was operated during the calendar year covered by the report in compliance with the requirements of the NO_X Budget Trading Program applicable to the unit, including:

(1) Whether the unit was operated in compliance with the NO_X Budget emissions limitation;

(2) Whether the monitoring plan that governs the unit has been maintained to reflect the actual operation and monitoring of the unit and contains all information necessary to attribute NO_X emissions to the unit, in accordance with subpart H of this part;

(3) Whether all the NO_X emissions from the unit, or a group of units (including the unit) using a common stack, were monitored or accounted for through the missing data procedures and reported in the quarterly monitoring reports, including whether conditional data were reported in the quarterly reports in accordance with subpart H of this part. If conditional data were reported, the owner or operator shall indicate whether the status of all conditional data has been resolved and all necessary quarterly report resubmissions have been made;

(4) Whether the facts that form the basis for certification under subpart H of this part of each monitor at the unit or a group of units (including the unit) using a common stack, or for using an excepted monitoring method or alternative monitoring method approved under subpart H of this part, if any, have changed; and

(5) If a change is required to be reported under paragraph (c)(4) of this section, specify the nature of the change, the reason for the change, when the change occurred, and how the unit's compliance status was determined subsequent to the change, including what method was used to determine emissions when a change mandated the need for monitor recertification.

§ 97.31 Administrator's action on compliance certifications.

(a) The Administrator may review and conduct independent audits concerning any compliance certification or any other submission under the NO_X Budget Trading Program and make appropriate adjustments of the information in the compliance certifications or other submissions.

(b) The Administrator may deduct NO_X allowances from or transfer NO_X allowances to a unit's compliance account or a source's overdraft account based on the information in the compliance certifications or other submissions, as adjusted under paragraph (a) of this section.

Subpart E—NO_X Allowance Allocations

§ 97.40 Trading program budget.

In accordance with §§ 97.41 and 97.42, the Administrator will allocate to the NO_X Budget units under § 97.4(a) in a State, for each control period specified in § 97.41, a total number of NO_X allowances equal to the trading budget for the State, as set forth in appendix C of this part, less the sum of the NO_X emission limitations (in tons) for each unit exempt under § 97.4(b) that is not allocated any NO_X allowances under § 97.42 (b) or (c) for the control period and whose NO_X emission limitation (in tons of NO_X) is not included in the amount calculated under § 97.42(d)(5)(ii)(B) for the control period.

[65 FR 2727, Jan. 18, 2000, as amended at 69 FR 21646, Apr. 21, 2004]

§ 97.41 Timing requirements for NO_X allowance allocations.

(a) The NO_X allowance allocations, determined in accordance with §§ 97.42(a) through (c), for the control periods in 2004 through 2007 are set forth in appendices A and B of this part.

(b) By April 1, 2005, the Administrator will determine by order the NO_X allowance allocations, in accordance with §§ 97.42 (a) through (c), for the control periods in 2008 through 2012.

(c) By April 1, 2010, by April 1 of 2015, and thereafter by April 1 of the year that is 5 years after the last year for which NO_X allowances allocations are determined, the Administrator will determine by order the NO_X allowance allocations, in accordance with §§ 97.42(a) through (c), for the control periods in the years that are 3, 4, 5, 6, and 7 years after the applicable deadline under this paragraph (c).

(d) By April 1, 2004 and April 1 of each year thereafter, the Administrator will determine by order the NO_X allowance allocations, in accordance with § 97.42(d), for the control period in the year of the applicable deadline under this paragraph (d).

(e) The Administrator will make available to the public each determination of NO_X allowance allocations under paragraph (b), (c), or (d) of this section and will provide an opportunity for submission of objections to the determination. Objections shall be limited to addressing whether the determination is in accordance with § 97.42. Based on any such objections, the Administrator will adjust each determination to the extent necessary to ensure that it is in accordance with § 97.42.

[65 FR 2727, Jan. 18, 2000, as amended at 67 FR 21529, Apr. 30, 2002]

§ 97.42 NO_X allowance allocations.

(a)(1) The heat input (in mmBtu) used for calculating NO_X allowance allocations for each NO_X Budget unit under § 97.4(a) will be:

(i) For a NO_X allowance allocation under § 97.41(a):

(A) For a unit under § 97.4(a)(1), the average of the two highest amounts of the unit's heat input for the control periods in 1995 through 1998; or

(B) For a unit under § 97.4(a)(2), the control period in 1995 or, if the Administrator determines that reasonably reliable data are available for control periods in 1996 through 1998, the average of the two highest amounts of the unit's heat input for the control periods in 1995 through 1998.

(ii) For a NO_X allowance allocation under § 97.41(b), the unit's average heat input for the control periods in 2002 through 2004.

(iii) For a NO_X allowance allocation under § 97.41(c), the unit's average heat input for the control period in the

years that are 4, 5, 6, 7, and 8 years before the first year for which the allocation is being calculated.

(2) The unit's heat input for the control period in each year specified under paragraph (a)(1) of this section will be determined in accordance with part 75 of this chapter. Notwithstanding the first sentence of this paragraph (a)(2):

(i) For a NO_X allowance allocation under § 97.41(a), such heat input will be determined using the best available data reported to the Administrator for the unit if the unit was not otherwise subject to the requirements of part 75 of this chapter for the control period.

(ii) For a NO_X allowance allocation under § 97.41(b) or (c) for a unit exempt under § 97.4(b), such heat input shall be treated as zero if the unit is exempt under § 97.4(b) during the control period.

(b) For each group of control periods specified in § 97.41(a) through (c), the Administrator will allocate to all NO_X Budget units in a given State under § 97.4(a)(1) that commenced operation before May 1, 1997 for allocations under § 97.41(a), May 1, 2003 for allocations under § 97.41(b), and May 1 of the year 5 years before the first year for which the allocation under § 97.41(c) is being calculated, a total number of NO_X allowances equal to 95 percent of the portion of the State's trading program budget under § 97.40 covering such units. The Administrator will allocate in accordance with the following procedures:

(1) The Administrator will allocate NO_X allowances to each NO_X Budget unit under § 97.4(a)(1) for each control period in an amount equaling 0.15 lb/mmBtu multiplied by the heat input determined under paragraph (a) of this section, divided by 2,000 lb/ton, and rounded to the nearest whole number of NO_X allowances as appropriate.

(2) If the initial total number of NO_X allowances allocated to all NO_X Budget units under § 97.4(a)(1) in the State for a control period under paragraph (b)(1) of this section does not equal 95 percent of the portion of the State's trading program budget under § 97.40 covering such units, the Administrator will adjust the total number of NO_X allowances allocated to all such NO_X Budget units for the control period under paragraph (b)(1) of this section so that the total number of NO_X allowances allocated equals 95 percent of such portion of the State's trading program budget. This adjustment will be made by: multiplying each unit's allocation by 95 percent of such portion of the State's trading program budget; dividing by the total number of NO_X allowances allocated under paragraph (b)(1) of this section for the control period; and rounding to the nearest whole number of NO_X allowances as appropriate.

(c) For each group of control periods specified in § 97.41(a) through (c), the Administrator will allocate to all NO_X Budget units in a given State under § 97.4(a)(2) that commenced operation before May 1, 1997 for allocations under § 97.41(a), May 1, 2003 for allocations under § 97.41(b), and May 1 of the year 5 years before the first year for which the allocation under § 97.41(c) is being calculated, a total number of NO_X allowances equal to 95 percent of the portion of the State's trading program budget under § 97.40 covering such units. The Administrator will allocate in accordance with the following procedures:

(1) The Administrator will allocate NO_X allowances to each NO_X Budget unit under § 97.4(a)(2) for each control period in an amount equaling 0.17 lb/mmBtu multiplied by the heat input determined under paragraph (a) of this section, divided by 2,000 lb/ton, and rounded to the nearest whole number of NO_X allowances as appropriate.

(2) If the initial total number of NO_X allowances allocated to all NO_X Budget units under § 97.4(a)(2) in the State for a control period under paragraph (c)(1) of this section does not equal 95 percent of the portion of the State's trading program budget under § 97.40 covering such units, the Administrator will adjust the total number of NO_X allowances allocated to all such NO_X Budget units for the control period under paragraph (a)(1) of this section so that the total number of NO_X allowances allocated equals 95 percent of the portion of the State's trading program budget under § 97.40 covering such units. This adjustment will be made by: multiplying each unit's allocation by 95 percent of the portion of the

State's trading program budget under §97.40 covering such units; dividing by the total number of NO_X allowances allocated under paragraph (c)(1) of this section for the control period; and rounding to the nearest whole number of NO_X allowances as appropriate.

(d) For each control period specified in §97.41(d), the Administrator will allocate NO_X allowances to NO_X Budget units in a given State under §97.4(a) (except for units exempt under §97.4(b)) that commence operation, or are projected to commence operation, on or after: May 1, 1997 (for control periods under §97.41(a)); May 1, 2003, (for control periods under §97.41(b)); and May 1 of the year 5 years before the beginning of the group of 5 years that includes the control period (for control periods under §97.41(c)). The Administrator will make the allocations under this paragraph (d) in accordance with the following procedures:

(1) The Administrator will establish one allocation set-aside for each control period. Each allocation set-aside will be allocated NO_X allowances equal to 5 percent of the tons of NO_X emission in the State's trading program budget under §97.40, rounded to the nearest whole number of NO_X allowances as appropriate.

(2) The NO_X authorized account representative of a NO_X Budget unit specified in this paragraph (d) may submit to the Administrator a request, in a format specified by the Administrator, to be allocated NO_X allowances for the control period. The NO_X allowance allocation request must be received by the Administrator on or after the date on which the State permitting authority issues a permit to construct the unit and by January 1 before the control period for which NO_X allowances are requested.

(3) In a NO_X allowance allocation request under paragraph (d)(2) of this section, the NO_X authorized account representative for a NO_X Budget unit under §97.4(a)(1) may request for the control period NO_X allowances in an amount that does not exceed the lesser of:

(i) 0.15 lb/mmBtu multiplied by the unit's maximum design heat input, multiplied by the lesser of 3,672 hours or the number of hours remaining in the control period starting with the day in the control period on which the unit commences operation or is projected to commence operation, divided by 2,000 lb/ton, and rounded to the nearest whole number of NO_X allowances as appropriate; or

(ii) The unit's most stringent State or Federal NO_X emission limitation multiplied by the unit's maximum design heat input, multiplied by the lesser of 3,672 hours or the number of hours remaining in the control period starting with the day in the control period on which the unit commences operation or is projected to commence operation, divided by 2,000 lb/ton, and rounded to the nearest whole number of NO_X allowances as appropriate.

(4) In a NO_X allowance allocation request under paragraph (d)(2) of this section, the NO_X authorized account representative for a NO_X Budget unit under §97.4(a)(2) may request for the control period NO_X allowances in an amount that does not exceed the lesser of:

(i) 0.17 lb/mmBtu multiplied by the unit's maximum design heat input, multiplied by the lesser of 3,672 hours or the number of hours remaining in the control period starting with the day in the control period on which the unit commences operation or is projected to commence operation, divided by 2,000 lb/ton, and rounded to the nearest whole number of NO_X allowances as appropriate; or

(ii) The unit's most stringent State or Federal NO_X emission limitation multiplied by the unit's maximum design heat input, multiplied by the lesser of 3,672 hours or the number of hours remaining in the control period starting with the day in the control period on which the unit commences operation or is projected to commence operation, divided by 2,000 lb/ton, and rounded to the nearest whole number of NO_X allowances as appropriate.

(5) The Administrator will review each NO_X allowance allocation request submitted in accordance with paragraph (d)(2) of this section and will allocate NO_X allowances pursuant to such request as follows:

(i) Upon receipt of the NO_X allowance allocation request, the Administrator will make any necessary adjustments

to the request to ensure that the requirements of paragraphs (d) introductory text, (d)(2), (d)(3), and (d)(4) are met.

(ii) The Administrator will determine the following amounts:

(A) The sum of the NO_X allowances requested (as adjusted under paragraph (d)(5)(i) of this section) in all NO_X allowance allocation requests under paragraph (d)(2) of this section for the control period; and

(B) For units exempt under § 97.4(b) in the State that commenced operation, or are projected to commence operation, on or after May 1, 1997 (for control periods under § 97.41(a)); May 1, 2003, (for control periods under § 97.41(b)); and May 1 of the year 5 years before beginning of the group of 5 years that includes the control period (for control periods under § 97.41(c)), the sum of the NO_X emission limitations (in tons of NO_X) on which each unit's exemption under § 97.4(b) is based.

(iii) If the number of NO_X allowances in the allocation set-aside for the control period less the amount under paragraph (d)(5)(ii)(B) of this section is not less than the amount determined under paragraph (d)(5)(ii)(A) of this section, the Administrator will allocate the amount of the NO_X allowances requested (as adjusted under paragraph (d)(5)(i) of this section) to the NO_X Budget unit for which the allocation request was submitted.

(iv) If the number of NO_X allowances in the allocation set-aside for the control period less the amount under paragraph (d)(5)(ii)(B) of this section is less than the amount determined under paragraph (d)(5)(ii)(A) of this section, the Administrator will allocate, to the NO_X Budget unit for which the allocation request was submitted, the amount of NO_X allowances requested (as adjusted under paragraph (d)(5)(i) of this section) multiplied by the number of NO_X allowances in the allocation set-aside for the control period less the amount determined under paragraph (d)(5)(ii)(B) of this section, divided by the amount determined under paragraph (d)(5)(ii)(A) of this section, and rounded to the nearest whole number of NO_X allowances as appropriate.

(e)(1) For a NO_X Budget unit that is allocated NO_X allowances under paragraph (d) of this section for a control period, the Administrator will deduct NO_X allowances under § 97.54(b), (e), or (f) to account for the actual heat input of the unit during the control period. The Administrator will calculate the number of NO_X allowances to be deducted to account for the unit's actual heat input using the following formulas and rounding to the nearest whole number of NO_X allowance as appropriate, provided that the number of NO_X allowances to be deducted shall be zero if the number calculated is less than zero:

NO_X allowances deducted for actual heat input for a unit under § 97.4(a)(1) = Unit's NO_X allowances allocated for control period − (Unit's actual control period heat input× the lesser of 0.15 lb/mmBtu the unit's most stringent State or Federal emission limitation × 2,000 lb/ton); and NO_X allowances deducted for actual heat input for a unit under § 97.4(a)(2) = Unit's NO_X allowances allocated for control period − (Unit's actual control period heat input × the lesser of 0.17 lb/mmBtu the unit's most stringent State or Federal emission limitation ×2,000 lb/ton)

Where:

''Unit's NO_X allowances allocated for control period'' is the number of NO_X allowances allocated to the unit for the control period under paragraph (d) of this section; and

''Unit's actual control period heat input'' is the heat input (in mmBtu) of the unit during the control period.

(2) The Administrator will transfer any NO_X allowances deducted under paragraph (e)(1) of this section to the allocation set-aside for the control period for which they were allocated.

(f) After making the deductions for compliance under § 97.54(b), (e), or (f) for a control period, the Administrator will determine whether any NO_X allowances remain in the allocation set-aside for the control period. The Administrator will allocate any such NO_X allowances to the NO_X Budget units in the State using the following formula and rounding to the nearest whole number of NO_X allowances as appropriate:

Unit's share of NO_X allowances remaining in allocation set-aside = Total

NO_X allowances remaining in allocation set-aside × (Unit's NO_X allowance allocation ÷ State's trading program budget excluding allocation set-aside)

Where:

''Total NO_X allowances remaining in allocation set-aside'' is the total number of NO_X allowances remaining in the allocation set-aside for the control period;

''Unit's NO_X allowance allocation'' is the number of NO_X allowances allocated under paragraph (b) or (c) of this section to the unit for the control period to which the allocation set-aside applies; and

''State's trading program budget excluding allocation set-aside'' is the State's trading program budget under §97.40 for the control period to which the allocation set-aside applies multiplied by 95 percent, rounded to the nearest whole number of NO_X allowances as appropriate.

(g) If the Administrator determines that NO_X allowances were allocated under paragraph (b), (c), or (d) of this section for a control period and the recipient of the allocation is not actually a NO_X Budget unit under §97.4(a), the Administrator will notify the NO_X authorized account representative and then will act in accordance with the following procedures:

(1)(i) The Administrator will not record such NO_X allowances for the control period in an account under §97.53;

(ii) If the Administrator already recorded such NO_X allowances for the control period in an account under §97.53 and if the Administrator makes such determination before making all deductions pursuant to §97.54 (except deductions pursuant to §97.54(d)(2)) for the control period, then the Administrator will deduct from the account NO_X allowances equal in number to and allocated for the same or a prior control period as the NO_X allowances allocated to such recipient for the control period. The NO_X authorized account representative shall ensure that the account contains the NO_X allowances necessary for completion of such deduction. If account does not contain the necessary NO_X allowances, the Administrator will deduct the required number of NO_X allowances, regardless of the control period for which they were allocated, whenever NO_X allowances are recorded in the account; or

(iii) If the Administrator already recorded such NO_X allowances for the control period in an account under §97.53 and if the Administrator makes such determination after making all deductions pursuant to §97.54 (except deductions pursuant to §97.54(d)(2)) for the control period, then the Administrator will apply paragraph (g)(1)(ii) of this section to any subsequent control period for which NO_X allowances were allocated to such recipient.

(2) The Administrator will transfer the NO_X allowances that are not recorded, or that are deducted, pursuant to paragraph (g)(1) of this section to an allocation set-aside for the State in which such source is located.

[65 FR 2727, Jan. 18, 2000, as amended at 67 FR 21529, Apr. 30, 2002; 69 FR 21646, Apr. 21, 2004]

§97.43 Compliance Supplement Pool.

(a) For any NO_X Budget unit that reduces its NO_X emission rate in the 2001 through 2003 control period, the owners and operators may request early reduction credits in accordance with the following requirements:

(1) Each NO_X Budget unit for which the owners and operators intend to request, or request, any early reduction credits in accordance with paragraph (a)(4) of this section shall monitor and report NO_X emissions in accordance with subpart H of this part starting in the 2000 control period and for each control period for which such early reduction credits are requested. The unit's percent monitor data availability shall not be less than 90 percent during the 2000 control period, and the unit must be in full compliance with any applicable State or Federal NO_X emission control requirements during 2000 through 2002.

(2) NO_X emission rate and heat input under paragraphs (a)(3) and (4) of this section shall be determined in accordance with subpart H of this part.

(3) Each NO_X Budget unit for which the owners and operators intend to request, or request, any early reduction credits under paragraph (a)(4) of this section shall reduce its NO_X emission rate, for each control period for which early reduction credits are requested, to less than both 0.25 lb/mmBtu and 80

percent of the unit's NO_X emission rate in the 2000 control period.

(4) The NO_X authorized account representative of a NO_X Budget unit that meets the requirements of paragraphs (a) (1) and (3) of this section may submit to the Administrator a request for early reduction credits for the unit based on NO_X emission rate reductions made by the unit in the control period for 2001 through 2003.

(i) In the early reduction credit request, the NO_X authorized account may request early reduction credits for such control period in an amount equal to the unit's heat input for such control period multiplied by the difference between 0.25 lb/mmBtu and the unit's NO_X emission rate for such control period, divided by 2000 lb/ton, and rounded to the nearest whole number of tons.

(ii) The early reduction credit request must be submitted, in a format specified by the Administrator, by February 1, 2004.

(b) For any NO_X Budget unit that is subject to the Ozone Transport Commission NO_X Budget Program under title I of the Clean Air Act, the owners and operators may request early reduction credits in accordance with the following requirements:

(1) The NO_X authorized account representative of the unit may submit to the Administrator a request for early reduction credits in an amount equal to the amount of banked allowances under the Ozone Transport Commission NO_X Budget Program that were allocated for the control period in 2001 through 2003 and are held by the unit, in accordance with the Ozone Transport Commission NO_X Budget Program, as of the date of submission of the request. During the entire control period in 2001 through 2003 for which the allowances were allocated, the unit must have monitored and reported NO_X emissions in accordance with part 75 (except for subpart H) of this chapter and the Guidance for Implementation of Emission Monitoring Requirements for the NO_X Budget Program (January 28, 1997).

(2) The early reduction credit request under paragraph (b)(1) must be submitted, in a format specified by the Administrator, by February 1, 2004.

(3) The NO_X authorized account representative of the unit shall not submit a request for early reduction credits under paragraph (b)(1) of this section for banked allowances under the Ozone Transport Commission NO_X Budget Program that were allocated for any control period during which the unit made NO_X emission reductions for which he or she submits a request for early reduction credits under paragraph (a) of this section for the unit.

(c) The Administrator will review each early reduction credit request submitted in accordance with paragraph (a) or (b) of this section and will allocate NO_X allowances to NO_X Budget units in a given State and covered by such request as follows:

(1) Upon receipt of each early reduction credit request, the Administrator will make any necessary adjustments to the request to ensure that the amount of the early reduction credits requested meets the requirements of paragraph (a) or (b) of this section.

(2) After February 1, 2004, the Administrator will make available to the public a statement of the total number of early reduction credits requested by NO_X Budget units in the State.

(3) If the State's compliance supplement pool set forth in appendix D of this part has a number of NO_X allowances not less than the amount of early reduction credits in all early reduction credit requests under paragraph (a) or (b) of this section for 2001 through 2003 (as adjusted under paragraph (c)(1) of this section) submitted by February 1, 2004, the Administrator will allocate to each NO_X Budget unit covered by such requests one allowance for each early reduction credit requested (as adjusted under paragraph (c)(1) of this section).

(4) If the State's compliance supplement pool set forth in appendix D of this part has a smaller number of NO_X allowances than the amount of early reduction credits in all early reduction credit requests under paragraph (a) or (b) of this section for 2001 through 2003 (as adjusted under paragraph (c)(1) of this section) submitted by February 1, 2004, the Administrator will allocate NO_X allowances to each NO_X Budget

unit covered by such requests according to the following formula and rounding to the nearest whole number of NO_X allowances as appropriate:

Unit's allocation for early reduction credits = Unit's adjusted early reduction credits × (State's compliance supplement pool ÷ Total adjusted early reduction credits for all units)

Where:

''Unit's allocation for early reduction credits'' is the number of NO_X allowances allocated to the unit for early reduction credits.

''Unit's adjusted early reduction credits'' is the amount of early reduction credits requested for the unit for 2001 and 2002 in early reduction credit requests under paragraph (a) or (b) of this section, as adjusted under paragraph (c)(1) of this section.

''State's compliance supplement pool'' is the number of NO_X allowances in the State's compliance supplement pool set forth in appendix D of this part.

''Total adjusted early reduction credits for all units'' is the amount of early reduction credits requested for all units for 2001 and 2002 in early reduction credit requests under paragraph (a) or (b) of this section, as adjusted under paragraph (c)(1) of this section.

(5) By April 1, 2004, the Administrator will determine by order the allocations under paragraph (c)(3) or (4) of this section. The Administrator will make available to the public each determination of NO_X allowance allocations and will provide an opportunity for submission of objections to the determination. Objections shall be limited to addressing whether the determination is in accordance with paragraph (c)(1), (3), or (4) of this section. Based on any such objections, the Administrator will adjust each determination to the extent necessary to ensure that it is in accordance with paragraph (c)(1), (3), or (4) of this section.

(6) By May 1, 2004, the Administrator will record the allocations under paragraph (c)(3) or (4) of this section.

(7) NO_X allowances recorded under paragraph (c)(6) of this section may be deducted for compliance under §97.54 for the control period in 2004 or 2005. Notwithstanding §97.55(a), the Administrator will deduct as retired any NO_X allowance that is recorded under paragraph (c)(6) of this section and that is not deducted for compliance under §97.54 for the control period in 2003 or 2004.

[65 FR 2727, Jan. 18, 2000, as amended at 67 FR 21529, Apr. 30, 2002; 69 FR 21646, Apr. 21, 2004]

Subpart F—NO_X Allowance Tracking System

§97.50 NO_X Allowance Tracking System accounts.

(a) *Nature and function of compliance accounts and overdraft accounts.* Consistent with §97.51(a), the Administrator will establish one compliance account for each NO_X Budget unit and one overdraft account for each source with two or more NO_X Budget units. Allocations of NO_X allowances pursuant to subpart E of this part or §97.88, and deductions or transfers of NO_X allowances pursuant to §97.31, §96.54, §96.56, subpart G of this part, or subpart I of this part will be recorded in compliance accounts or overdraft accounts in accordance with this subpart.

(b) *Nature and function of general accounts.* Consistent with §97.51(b), the Administrator will establish, upon request, a general account for any person. Allocations of NO_X allowances pursuant to §97.4(b)(4)(ii) or §97.5(c)(2) and transfers of allowances pursuant to subpart G of this part will be recorded in general accounts in accordance with this subpart.

§97.51 Establishment of accounts.

(a) *Compliance accounts and overdraft accounts.* Upon receipt of a complete account certificate of representation under §97.13, the Administrator will establish:

(1) A compliance account for each NO_X Budget unit for which the account certificate of representation was submitted; and

(2) An overdraft account for each source for which the account certificate of representation was submitted and that has two or more NO_X Budget units.

(b) *General accounts*—(1) *Application for general account.* (i) Any person may apply to open a general account for the purpose of holding and transferring allowances. An application for a general account may designate one and only

one NO_X authorized account representative and one and only one alternate NO_X authorized account representative who may act on behalf of the NO_X authorized account representative. The agreement by which the alternate NO_X authorized account representative is selected shall include a procedure for authorizing the alternate NO_X authorized account representative to act in lieu of the NO_X authorized account representative. A complete application for a general account shall be submitted to the Administrator and shall include the following elements in a format prescribed by the Administrator:

(A) Name, mailing address, e-mail address (if any), telephone number, and facsimile transmission number (if any) of the NO_X authorized account representative and any alternate NO_X authorized account representative;

(B) At the option of the NO_X authorized account representative, organization name and type of organization;

(C) A list of all persons subject to a binding agreement for the NO_X authorized account representative and any alternate NO_X authorized account representative to represent their ownership interest with respect to the allowances held in the general account;

(D) The following certification statement by the NO_X authorized account representative and any alternate NO_X authorized account representative: ''I certify that I was selected as the NO_X authorized account representative or the NO_X alternate authorized account representative, as applicable, by an agreement that is binding on all persons who have an ownership interest with respect to NO_X allowances held in the general account. I certify that I have all the necessary authority to carry out my duties and responsibilities under the NO_X Budget Trading Program on behalf of such persons and that each such person shall be fully bound by my representations, actions, inactions, or submissions and by any order or decision issued to me by the Administrator or a court regarding the general account.;''

(E) The signature of the NO_X authorized account representative and any alternate NO_X authorized account representative and the dates signed.

(ii) Unless otherwise required by the permitting authority or the Administrator, documents of agreement referred to in the application for a general account shall not be submitted to the permitting authority or the Administrator. Neither the permitting authority nor the Administrator shall be under any obligation to review or evaluate the sufficiency of such documents, if submitted.

(2) *Authorization of NO_X authorized account representative.* Upon receipt by the Administrator of a complete application for a general account under paragraph (b)(1) of this section:

(i) The Administrator will establish a general account for the person or persons for whom the application is submitted.

(ii) The NO_X authorized account representative and any alternate NO_X authorized account representative for the general account shall represent and, by his or her representations, actions, inactions, or submissions, legally bind each person who has an ownership interest with respect to NO_X allowances held in the general account in all matters pertaining to the NO_X Budget Trading Program, not withstanding any agreement between the NO_X authorized account representative or any alternate NO_X authorized account representative and such person. Any such person shall be bound by any order or decision issued to the NO_X authorized account representative or any alternate NO_X authorized account representative by the Administrator or a court regarding the general account.

(iii) Any representation, action, inaction, or submission by any alternate NO_X authorized account representative shall be deemed to be a representation, action, inaction, or submission by the NO_X authorized account representative.

(iv) Each submission concerning the general account shall be submitted, signed, and certified by the NO_X authorized account representative or any alternate NO_X authorized account representative for the persons having an ownership interest with respect to NO_X allowances held in the general account. Each such submission shall include the following certification statement by the NO_X authorized account representative or any alternate NO_X authorizing

account representative: ''I am authorized to make this submission on behalf of the persons having an ownership interest with respect to the NO_X allowances held in the general account. I certify under penalty of law that I have personally examined, and am familiar with, the statements and information submitted in this document and all its attachments. Based on my inquiry of those individuals with primary responsibility for obtaining the information, I certify that the statements and information are to the best of my knowledge and belief true, accurate, and complete. I am aware that there are significant penalties for submitting false statements and information or omitting required statements and information, including the possibility of fine or imprisonment.''

(v) The Administrator will accept or act on a submission concerning the general account only if the submission has been made, signed, and certified in accordance with paragraph (b)(2)(iv) of this section.

(3) *Changing NO_X authorized account representative and alternate NO_X authorized account representative; changes in persons with ownership interest.* (i) The NO_X authorized account representative for a general account may be changed at any time upon receipt by the Administrator of a superseding complete application for a general account under paragraph (b)(1) of this section. Notwithstanding any such change, all representations, actions, inactions, and submissions by the previous NO_X authorized account representative prior to the time and date when the Administrator receives the superseding application for a general account shall be binding on the new NO_X authorized account representative and the persons with an ownership interest with respect to the NO_X allowances in the general account.

(ii) The alternate NO_X authorized account representative for a general account may be changed at any time upon receipt by the Administrator of a superseding complete application for a general account under paragraph (b)(1) of this section. Notwithstanding any such change, all representations, actions, inactions, and submissions by the previous alternate NO_X authorized account representative prior to the time and date when the Administrator receives the superseding application for a general account shall be binding on the new alternate NO_X authorized account representative and the persons with an ownership interest with respect to the NO_X allowances in the general account.

(iii)(A) In the event a new person having an ownership interest with respect to NO_X allowances in the general account is not included in the list of such persons in the account certificate of representation, such new person shall be deemed to be subject to and bound by the account certificate of representation, the representation, actions, inactions, and submissions of the NO_X authorized account representative and any alternate NO_X authorized account representative of the source or unit, and the decisions, orders, actions, and inactions of the Administrator, as if the new person were included in such list.

(B) Within 30 days following any change in the persons having an ownership interest with respect to NO_X allowances in the general account, including the addition of persons, the NO_X authorized account representative or any alternate NO_X authorized account representative shall submit a revision to the application for a general account amending the list of persons having an ownership interest with respect to the NO_X allowances in the general account to include the change.

(4) *Objections concerning NO_X authorized account representative.* (i) Once a complete application for a general account under paragraph (b)(1) of this section has been submitted and received, the Administrator will rely on the application unless and until a superseding complete application for a general account under paragraph (b)(1) of this section is received by the Administrator.

(ii) Except as provided in paragraph (b)(3)(i) or (ii) of this section, no objection or other communication submitted to the Administrator concerning the authorization, or any representation, action, inaction, or submission of the NO_X authorized account representative or any alternative NO_X authorized account representative for a

general account shall affect any representation, action, inaction, or submission of the NO_X authorized account representative or any alternative NO_X authorized account representative or the finality of any decision or order by the Administrator under the NO_X Budget Trading Program.

(iii) The Administrator will not adjudicate any private legal dispute concerning the authorization or any representation, action, inaction, or submission of the NO_X authorized account representative or any alternative NO_X authorized account representative for a general account, including private legal disputes concerning the proceeds of NO_X allowance transfers.

(c) *Account identification.* The Administrator will assign a unique identifying number to each account established under paragraph (a) or (b) of this section.

[65 FR 2727, Jan. 18, 2000, as amended at 69 FR 21646, Apr. 21, 2004]

§ 97.52 NO_X Allowance Tracking System responsibilities of NO_X authorized account representative.

(a) Following the establishment of a NO_X Allowance Tracking System account, all submissions to the Administrator pertaining to the account, including, but not limited to, submissions concerning the deduction or transfer of NO_X allowances in the account, shall be made only by the NO_X authorized account representative for the account.

(b) *Authorized account representative identification.* The Administrator will assign a unique identifying number to each NO_X authorized account representative.

§ 97.53 Recordation of NO_X allowance allocations.

(a) The Administrator will record the NO_X allowances for 2004 for a NO_X Budget unit allocated under subpart E of this part in the unit's compliance account, except for NO_X allowances under § 97.4(b)(4)(ii) or § 97.5(c)(2), which will be recorded in the general account specified by the owners and operators of the unit. The Administrator will record NO_X allowances for 2004 for a NO_X Budget opt-in unit in the unit's compliance account as allocated under § 97.88(a).

(b) By May 1, 2003, the Administrator will record the NO_X allowances for 2005 for a NO_X Budget unit allocated under subpart E of this part in the unit's compliance account, except for NO_X allowances under § 97.4(b)(4)(ii) or § 97.5(c)(2), which will be recorded in the general account specified by the owners and operators of the unit. The Administrator will record NO_X allowances for 2005 for a NO_X Budget opt-in unit in the unit's compliance account as allocated under § 97.88(a).

(c) By May 1, 2003, the Administrator will record the NO_X allowances for 2006 for a NO_X Budget unit allocated under subpart E of this part in the unit's compliance account, except for NO_X allowances under § 97.4(b)(4)(ii) or § 97.5(c)(2), which will be recorded in the general account specified by the owners and operators of the unit. The Administrator will record NO_X allowances for 2006 for a NO_X Budget opt-in unit in the unit's compliance account as allocated under § 97.88(a).

(d) By May 1, 2004, the Administrator will record the NO_X allowances for 2007 for a NO_X Budget unit allocated under subpart E of this part in the unit's compliance account, except for NO_X allowances under § 97.4(b)(4)(ii) or § 97.5(c)(2), which will be recorded in the general account specified by the owners and operators of the unit. The Administrator will record NO_X allowances for 2007 for a NO_X Budget opt-in unit in the unit's compliance account as allocated under § 97.88(a).

(e) Each year starting with 2005, after the Administrator has made all deductions from a NO_X Budget unit's compliance account and the overdraft account pursuant to § 97.54 (except deductions pursuant to § 97.54(d)(2)), the Administrator will record:

(1) NO_X allowances, in the compliance account, as allocated to the unit under subpart E of this part for the third year after the year of the control period for which such deductions were or could have been made;

(2) NO_X allowances, in the general account specified by the owners and operators of the unit, as allocated under § 97.4(b)(4)(ii) or § 97.5(c)(2) for the third

year after the year of the control period for which such deductions are or could have been made; and

(3) NO_X allowances, in the compliance account, as allocated to the unit under §97.88(a).

(f) *Serial numbers for allocated NO_X allowances.* When allocating NO_X allowances to a NO_X Budget unit and recording them in an account, the Administrator will assign each NO_X allowance a unique identification number that will include digits identifying the year for which the NO_X allowance is allocated.

[65 FR 2727, Jan. 18, 2000, as amended at 67 FR 21530, Apr. 30, 2002]

§97.54 Compliance.

(a) NO_X allowance transfer deadline. The NO_X allowances are available to be deducted for compliance with a unit's NO_X Budget emissions limitation for a control period in a given year only if the NO_X allowances:

(1) Were allocated for a control period in a prior year or the same year; and

(2) Are held in the unit's compliance account, or the overdraft account of the source where the unit is located, as of the NO_X allowance transfer deadline for that control period or are transferred into the compliance account or overdraft account by a NO_X allowance transfer correctly submitted for recordation under §97.60 by the NO_X allowance transfer deadline for that control period.

(b) *Deductions for compliance.* (1) Following the recordation, in accordance with §97.61, of NO_X allowance transfers submitted for recordation in the unit's compliance account or the overdraft account of the source where the unit is located by the NO_X allowance transfer deadline for a control period, the Administrator will deduct NO_X allowances available under paragraph (a) of this section to cover the unit's NO_X emissions (as determined in accordance with subpart H of this part), or to account for actual heat input under §97.42(e), for the control period:

(i) From the compliance account; and

(ii) Only if no more NO_X allowances available under paragraph (a) of this section remain in the compliance account, from the overdraft account. In deducting allowances for units at the source from the overdraft account, the Administrator will begin with the unit having the compliance account with the lowest account number and end with the unit having the compliance account with the highest account number (with account numbers sorted beginning with the left-most character and ending with the right-most character and the letter characters assigned values in alphabetical order and less than all numeric characters).

(2) The Administrator will deduct NO_X allowances first under paragraph (b)(1)(i) of this section and then under paragraph (b)(1)(ii) of this section:

(i) Until the number of NO_X allowances deducted for the control period equals the number of tons of NO_X emissions, determined in accordance with subpart H of this part, from the unit for the control period for which compliance is being determined, plus the number of NO_X allowances required for deduction to account for actual heat input under §97.42(e) for the control period; or

(ii) Until no more NO_X allowances available under paragraph (a) of this section remain in the respective account.

(c)(1) *Identification of NO_X allowances by serial number.* The NO_X authorized account representative for each compliance account may identify by serial number the NO_X allowances to be deducted from the unit's compliance account under paragraph (b), (d), (e), or (f) of this section. Such identification shall be made in the compliance certification report submitted in accordance with §97.30.

(2) *First-in, first-out.* The Administrator will deduct NO_X allowances for a control period from the compliance account, in the absence of an identification or in the case of a partial identification of NO_X allowances by serial number under paragraph (c)(1) of this section, or the overdraft account on a first-in, first-out (FIFO) accounting basis in the following order:

(i) Those NO_X allowances that were allocated for the control period to the unit under subpart E or I of this part;

(ii) Those NO_X allowances that were allocated for the control period to any unit and transferred and recorded in the account pursuant to subpart G of

this part, in order of their date of recordation;

(iii) Those NO_X allowances that were allocated for a prior control period to the unit under subpart E or I of this part; and

(iv) Those NO_X allowances that were allocated for a prior control period to any unit and transferred and recorded in the account pursuant to subpart G of this part, in order of their date of recordation.

(d) *Deductions for excess emissions.* (1) After making the deductions for compliance under paragraph (b) of this section, the Administrator will deduct from the unit's compliance account or the overdraft account of the source where the unit is located a number of NO_X allowances, allocated for a control period after the control period in which the unit has excess emissions, equal to three times the number of the unit's excess emissions.

(2) If the compliance account or overdraft account does not contain sufficient NO_X allowances, the Administrator will deduct the required number of NO_X allowances, regardless of the control period for which they were allocated, whenever NO_X allowances are recorded in either account.

(3) Any allowance deduction required under paragraph (d) of this section shall not affect the liability of the owners and operators of the NO_X Budget unit for any fine, penalty, or assessment, or their obligation to comply with any other remedy, for the same violation, as ordered under the Clean Air Act or applicable State law. The following guidelines will be followed in assessing fines, penalties or other obligations:

(i) For purposes of determining the number of days of violation, if a NO_X Budget unit has excess emissions for a control period, each day in the control period (153 days) constitutes a day in violation unless the owners and operators of the unit demonstrate that a lesser number of days should be considered.

(ii) Each ton of excess emissions is a separate violation.

(e) *Deductions for units sharing a common stack.* In the case of units sharing a common stack and having emissions that are not separately monitored or apportioned in accordance with subpart H of this part:

(1) The NO_X authorized account representative of the units may identify the percentage of NO_X allowances to be deducted from each such unit's compliance account to cover the unit's share of NO_X emissions from the common stack for a control period. Such identification shall be made in the compliance certification report submitted in accordance with § 97.30.

(2) Notwithstanding paragraph (b)(2)(i) of this section, the Administrator will deduct NO_X allowances for each such unit until the number of NO_X allowances deducted equals the unit's identified percentage under paragraph (e)(1) of this section or, if no percentage is identified, an equal percentage for each unit multiplied by the number of tons of NO_X emissions, as determined in accordance with subpart H of this part, from the common stack for the control period for which compliance is being determined. In addition to the deductions under the first sentence of this paragraph (e)(1), the Administrator will deduct NO_X allowances for each such unit until the number of NO_X allowances deducted equals the number of NO_X allowances required to account for actual heat input under § 97.42(e) for the unit for the control period.

(f) *Deduction of banked allowances.* Each year starting in 2006, after the Administrator has completed the designation of banked NO_X allowances under § 97.55(b) and before May 1 of the year, the Administrator will determine the extent to which banked NO_X allowances otherwise available under paragraph (a) of this section are available for compliance in the control period for the current year, as follows. For each State NO_X Budget Trading Program that is established, and approved and administered by the Administrator pursuant to § 51.121 of this chapter, the terms ''compliance account'' or ''compliance accounts'', ''overdraft account'' or ''overdraft accounts'', ''general account'' or ''general accounts'', ''States'', and ''trading program budgets under § 97.40'' in paragraphs (f)(1) through (f)(3) of this section shall be read to include respectively: A compliance account or compliance accounts

established under such State NO_X Budget Trading Program; an overdraft account or overdraft accounts established under such State NO_X Budget Trading Program; a general account or general accounts established under such State NO_X Budget Trading Program; the State or portion of a State covered by such State NO_X Budget Trading Program; and the trading program budget of the State or portion of a State covered by such State NO_X Budget Trading Program.

(1) The Administrator will determine the total number of banked NO_X allowances held in compliance accounts, overdraft accounts, or general accounts.

(2) If the total number of banked NO_X allowances determined, under paragraph (f)(1) of this section, to be held in compliance accounts, overdraft accounts, or general accounts is less than or equal to 10 percent of the sum of the trading program budgets under §97.40 for all States for the control period, any banked NO_X allowance may be deducted for compliance in accordance with paragraphs (a) through (e) of this section.

(3) If the total number of banked NO_X allowances determined, under paragraph (f)(1) of this section, to be held in compliance accounts, overdraft accounts, or general accounts exceeds 10 percent of the sum of the trading program budgets under §97.40 for all States for the control period, any banked allowance may be deducted for compliance in accordance with paragraphs (a) through (e) of this section, except as follows:

(i) The Administrator will determine the following ratio: 0.10 multiplied by the sum of the trading program budgets under §97.40 for all States for the control period and divided by the total number of banked NO_X allowances determined, under paragraph (f)(1) of this section, to be held in compliance accounts, overdraft accounts, or general accounts.

(ii) The Administrator will multiply the number of banked NO_X allowances in each compliance account or overdraft account by the ratio determined under paragraph (f)(3)(i) of this section. The resulting product is the number of banked NO_X allowances in the account that may be deducted for compliance in accordance with paragraphs (a) through (e) of this section. Any banked NO_X allowances in excess of the resulting product may be deducted for compliance in accordance with paragraphs (a) through (e) of this section, except that, if such NO_X allowances are used to make a deduction under paragraph (b) or (e) of this section, two (rather than one) such NO_X allowances shall authorize up to one ton of NO_X emissions during the control period and must be deducted for each deduction of one NO_X allowance required under paragraph (b) or (e) of this section.

(g) *Recordation of deductions.* The Administrator will record in the appropriate compliance account or overdraft account all deductions from such an account pursuant to paragraph (b), (d), (e), or (f) of this section.

[65 FR 2727, Jan. 18, 2000, as amended at 67 FR 21530, Apr. 30, 2002; 69 FR 21646, Apr. 21, 2004]

§97.55 Banking.

NO_X allowances may be banked for future use or transfer in a compliance account, an overdraft account, or a general account, as follows:

(a) Any NO_X allowance that is held in a compliance account, an overdraft account, or a general account will remain in such account unless and until the NO_X allowance is deducted or transferred under §97.31, §97.54, §97.56, or subpart G or I of this part.

(b) The Administrator will designate, as a ''banked'' NO_X allowance, any NO_X allowance that remains in a compliance account, an overdraft account, or a general account after the Administrator has made all deductions for a given control period from the compliance account or overdraft account pursuant to §97.54 (except deductions pursuant to §97.54(d)(2)) and that was allocated for that control period or a control period in a prior year.

§97.56 Account error.

The Administrator may, at his or her sole discretion and on his or her own motion, correct any error in any NO_X Allowance Tracking System account. Within 10 business days of making such

correction, the Administrator will notify the NO_X authorized account representative for the account.

§ 97.57 Closing of general accounts.

(a) The NO_X authorized account representative of a general account may instruct the Administrator to close the account by submitting a statement requesting deletion of the account from the NO_X Allowance Tracking System and by correctly submitting for recordation under § 97.60 an allowance transfer of all NO_X allowances in the account to one or more other NO_X Allowance Tracking System accounts.

(b) If a general account shows no activity for a period of a year or more and does not contain any NO_X allowances, the Administrator may notify the NO_X authorized account representative for the account that the account will be closed and deleted from the NO_X Allowance Tracking System following 20 business days after the notice is sent. The account will be closed after the 20-day period unless before the end of the 20-day period the Administrator receives a correctly submitted transfer of NO_X allowances into the account under § 97.60 or a statement submitted by the NO_X authorized account representative demonstrating to the satisfaction of the Administrator good cause as to why the account should not be closed.

Subpart G—NO_X Allowance Transfers

§ 97.60 Submission of NO_X allowance transfers.

The NO_X authorized account representatives seeking recordation of a NO_X allowance transfer shall submit the transfer to the Administrator. To be considered correctly submitted, the NO_X allowance transfer shall include the following elements in a format specified by the Administrator:

(a) The numbers identifying both the transferor and transferee accounts;

(b) A specification by serial number of each NO_X allowance to be transferred; and

(c) The printed name and signature of the NO_X authorized account representative of the transferor account and the date signed.

§ 97.61 EPA recordation.

(a) Within 5 business days of receiving a NO_X allowance transfer, except as provided in paragraph (b) of this section, the Administrator will record a NO_X allowance transfer by moving each NO_X allowance from the transferor account to the transferee account as specified by the request, provided that:

(1) The transfer is correctly submitted under § 97.60; and

(2) The transferor account includes each NO_X allowance identified by serial number in the transfer.

(b) A NO_X allowance transfer that is submitted for recordation following the NO_X allowance transfer deadline and that includes any NO_X allowances allocated for a control period prior to or the same as the control period to which the NO_X allowance transfer deadline applies will not be recorded until after the Administrator completes the recordation of NO_X allowance allocations under § 97.53 for the control period in the fourth year after the control period to which the NO_X allowance transfer deadline applies.

(c) Where a NO_X allowance transfer submitted for recordation fails to meet the requirements of paragraph (a) of this section, the Administrator will not record such transfer.

[65 FR 2727, Jan. 18, 2000, as amended at 69 FR 21647, Apr. 21, 2004]

§ 97.62 Notification.

(a) *Notification of recordation.* Within 5 business days of recordation of a NO_X allowance transfer under § 97.61, the Administrator will notify the NO_X authorized account representatives of both the transferor and transferee accounts.

(b) *Notification of non-recordation.* Within 10 business days of receipt of a NO_X allowance transfer that fails to meet the requirements of § 97.61(a), the Administrator will notify the NO_X authorized account representatives of both accounts subject to the transfer of:

(1) A decision not to record the transfer; and

(2) The reasons for such non-recordation.

(c) Nothing in this section shall preclude the submission of a NO_X allowance transfer for recordation following notification of non-recordation.

Subpart H—Monitoring and Reporting

§97.70 General requirements.

The owners and operators, and to the extent applicable, the NO_X authorized account representative of a NO_X Budget unit, shall comply with the monitoring, recordkeeping, and reporting requirements as provided in this subpart and in subpart H of part 75 of this chapter. For purposes of complying with such requirements, the definitions in §97.2 and in §72.2 of this chapter shall apply, and the terms ''affected unit,'' ''designated representative,'' and ''continuous emission monitoring system'' (or ''CEMS'') in part 75 of this chapter shall be deemed to refer to the terms ''NO_X Budget unit,'' ''NO_X authorized account representative,'' and ''continuous emission monitoring system'' (or ''CEMS'') respectively, as defined in §97.2. The owner or operator of a unit that is not a NO_X Budget unit but that is monitored under §75.72(b)(2)(ii) of this chapter shall comply with the monitoring, recordkeeping, and reporting requirements for a NO_X Budget unit under this part.

(a) *Requirements for installation, certification, and data accounting.* The owner or operator of each NO_X Budget unit shall meet the following requirements. These provisions shall also apply to a unit for which an application for a NO_X Budget opt-in permit is submitted and not denied or withdrawn, as provided in subpart I of this part:

(1) Install all monitoring systems required under this subpart for monitoring NO_X mass emissions. This includes all systems required to monitor NO_X emission rate, NO_X concentration, heat input rate, and stack flow rate, in accordance with §§75.71 and 75.72 of this chapter.

(2) Install all monitoring systems for monitoring heat input rate.

(3) Successfully complete all certification tests required under §97.71 and meet all other requirements of this subpart and part 75 of this chapter applicable to the monitoring systems under paragraphs (a)(1) and (2) of this section.

(4) Record, report, and quality-assure the data from the monitoring systems under paragraphs (a)(1) and (2) of this section.

(b) *Compliance deadlines.* The owner or operator shall meet the certification and other requirements of paragraphs (a)(1) through (a)(3) of this section on or before the following dates. The owner or operator shall record, report and quality-assure the data from the monitoring systems under paragraphs (a)(1) and (a)(2) of this section on and after the following dates.

(1) For the owner or operator of a NO_X Budget unit for which the owner or operator intends to apply for early reduction credits under §97.43, by May 1, 2001. If the owner or operator of a NO_X Budget unit fails to meet this deadline, he or she is not eligible to apply for early reduction credits and is subject to the deadline under paragraph (b)(2) of this section.

(2) For the owner or operator of a NO_X Budget unit under §97.4(a) that commences operation before January 1, 2003 and that is not subject to or does not meet the deadline under paragraph (b)(1) of this section, by May 1, 2003.

(3) For the owner or operator of a NO_X Budget unit under §97.4(a) that commences operation on or after January 1, 2003 and that reports on an annual basis under §97.74(d) by the following dates:

(i) The earlier of 90 unit operating days after the date on which the unit commences commercial operation or 180 calendar days after the date on which the unit commences commercial operation; or

(ii) May 1, 2003, if the compliance date under paragraph (b)(3)(i) of this section is before May 1, 2003.

(4) For the owner or operator of a NO_X Budget unit under §97.4(a) that commences operation on or after January 1, 2003 and that reports on a control period basis under §97.74(d)(2)(ii), by the following dates:

(i) The earlier of 90 unit operating days or 180 calendar days after the date on which the unit commences commercial operation, if this compliance date is during a control period; or

(ii) May 1 immediately following the compliance date under paragraph (b)(4)(i) of this section, if such compliance date is not during a control period.

(5) For the owner or operator of a NO_X Budget unit that has a new stack or flue or add-on NO_X emission controls for which construction is completed after the applicable deadline under paragraph (b)(1), (b)(2), (b)(3), or (b)(4) of this section or under subpart I of this part and that reports on an annual basis under § 97.74(d), by the earlier of 90 unit operating days or 180 calendar days after the date on which emissions first exit to the atmosphere through the new stack or flue or add-on NO_X emission controls.

(6) For the owner or operator of a NO_X Budget unit that has a new stack or flue or add-on NO_X emission controls for which construction is completed after the applicable deadline under paragraph (b)(1), (b)(2), (b)(3), or (b)(4) of this section or under subpart I of this part and that reports on a control period basis under § 97.74(d)(2)(ii), by the following dates:

(i) The earlier of 90 unit operating days or 180 calendar days after the date on which emissions first exit to the atmosphere through the new stack or flue or add-on NO_X emission controls, if this compliance date is during a control period; or

(ii) May 1 immediately following the compliance date under paragraph (b)(6)(i) of this section, if such compliance date is not during a control period.

(7) For the owner or operator of a unit for which an application for a NO_X Budget opt-in permit is submitted and not denied or withdrawn, by the date specified under subpart I of this part.

(c) *Commencement of data reporting.* (1) The owner or operator of NO_X Budget units under paragraph (b)(1) or (b)(2) of this section shall determine, record and report NO_X mass emissions, heat input rate, and any other values required to determine NO_X mass emissions (*e.g.*, NO_X emission rate and heat input rate, or NO_X concentration and stack flow rate) in accordance with § 75.70(g) of this chapter, beginning on the first hour of the applicable compliance deadline in paragraph (b)(1) or (b)(2) of this section.

(2) The owner or operator of a NO_X Budget unit under paragraph (b)(3) or (b)(4) of this section shall determine, record and report NO_X mass emissions, heat input rate, and any other values required to determine NO_X mass emissions (*e.g.*, NO_X emission rate and heat input rate, or NO_X concentration and stack flow rate) and electric and thermal output in accordance with § 75.70(g) of this chapter, beginning on:

(i) The date and hour on which the unit commences operation, if the date and hour on which the unit commences operation is during a control period; or

(ii) The first hour on May 1 of the first control period after the date and hour on which the unit commences operation, if the date and hour on which the unit commences operation is not during a control period.

(3) Notwithstanding paragraphs (c)(2)(i) and (c)(2)(ii) of this section, the owner or operator may begin reporting NO_X mass emission data and heat input data before the date and hour under paragraph (c)(2)(i) or (c)(2)(ii) of this section if the unit reports on an annual basis and if the required monitoring systems are certified before the applicable date and hour under paragraph (c)(1) or (c)(2) of this section.

(d) *Prohibitions.* (1) No owner or operator of a NO_X Budget unit shall use any alternative monitoring system, alternative reference method, or any other alternative for the required continuous emission monitoring system without having obtained prior written approval in accordance with § 97.75.

(2) No owner or operator of a NO_X Budget unit shall operate the unit so as to discharge, or allow to be discharged, NO_X emissions to the atmosphere without accounting for all such emissions in accordance with the applicable provisions of this subpart and part 75 of this chapter, except as provided in § 75.74 of this chapter.

(3) No owner or operator of a NO_X Budget unit shall disrupt the continuous emission monitoring system, any portion thereof, or any other approved emission monitoring method, and thereby avoid monitoring and recording NO_X mass emissions discharged into the atmosphere, except for periods

of recertification or periods when calibration, quality assurance testing, or maintenance is performed in accordance with the applicable provisions of this subpart and part 75 of this chapter or except as provided in §75.74 of this chapter.

(4) No owner or operator of a NO_X Budget unit shall retire or permanently discontinue use of the continuous emission monitoring system, any component thereof, or any other approved emission monitoring system under this subpart, except under any one of the following circumstances:

(i) During the period that the unit is covered by an exemption under §97.4(b) or §97.5 that is in effect;

(ii) The owner or operator is monitoring emissions from the unit with another certified monitoring system approved, in accordance with the applicable provisions of this subpart and part 75 of this chapter, by the permitting authority for use at that unit that provides emission data for the same pollutant or parameter as the retired or discontinued monitoring system; or

(iii) The NO_X authorized account representative submits notification of the date of certification testing of a replacement monitoring system for the retired or discontinued monitoring system in accordance with §97.71(b)(2).

[65 FR 2727, Jan. 18, 2000, as amended at 67 FR 21530, Apr. 30, 2002; 69 FR 21647, Apr. 21, 2004]

§97.71 Initial certification and recertification procedures.

(a) The owner or operator of a NO_X Budget unit that is subject to an Acid Rain emissions limitation shall comply with the initial certification and recertification procedures of part 75 of this chapter for NO_X-diluent CEMS, flow monitors, NO_X concentration CEMS, or excepted monitoring systems under appendix E of part 75 of this chapter for NO_X. under appendix D for heat input, or under §75.19 for NO_X and heat input, except that:

(1) If, prior to January 1, 1998, the Administrator approved a petition under §75.17(a) or (b) of this chapter for apportioning the NO_X emission rate measured in a common stack or a petition under §75.66 of this chapter for an alternative to a requirement in §75.17 of this chapter, the NO_X authorized account representative shall resubmit the petition to the Administrator under §97.75(a) to determine if the approval applies under the NO_X Budget Trading Program.

(2) For any additional CEMS required under the common stack provisions in §75.72 of this chapter or for any NO_X concentration CEMS used under the provisions of §75.71(a)(2) of this chapter, the owner or operator shall meet the requirements of paragraph (b) of this section.

(b) The owner or operator of a NO_X Budget unit that is not subject to an Acid Rain emissions limitation shall comply with the following initial certification and recertification procedures. The owner or operator of such a unit that qualifies to use the low mass emissions excepted monitoring methodology under §75.19 of this chapter or that qualifies to use an alternative monitoring system under subpart E of part 75 of this chapter shall comply with the following procedures, as modified by paragraph (c) or (d) of this section. The owner or operator of a NO_X Budget unit that is subject to an Acid Rain emissions limitation and that requires additional CEMS under the common stack provisions in §75.72 of this chapter or uses a NO_X concentration CEMS under §75.71(a)(2) of this chapter shall comply with the following procedures.

(1) *Requirements for initial certification.* The owner or operator shall ensure that each emission monitoring system required by subpart H of part 75 of this chapter (which includes the automated data acquisition and handling system) successfully completes all of the initial certification testing required under §75.20 of this chapter by the applicable deadline in §97.70(b). In addition, whenever the owner or operator installs an emission monitoring system in order to meet the requirements of this part in a location where no such emission monitoring system was previously installed, initial certification in accordance with §75.20 of this chapter is required.

(2) *Requirements for recertification.* Whenever the owner or operator makes a replacement, modification, or change in a certified emission monitoring system that may significantly affect the

ability of the system to accurately measure or record NO_X mass emissions or heat input rate or to meet the requirements of § 75.21 of this chapter or appendix B to part 75 of this chapter, the owner or operator shall recertify the emission monitoring system in accordance with § 75.20(b) of this chapter. Furthermore, whenever the owner or operator makes a replacement, modification, or change to the flue gas handling system or the unit's operation that may significantly change the stack flow or concentration profile, the owner or operator shall recertify the continuous emissions monitoring system in accordance with § 75.20(b) of this chapter. Examples of changes that require recertification include: replacement of the analyzer, complete replacement of an existing continuous emission monitoring system, or change in location or orientation of the sampling probe or site.

(3) *Certification approval process for initial certification and recertification*—(i) *Notification of certification*. The NO_X authorized account representative shall submit to the Administrator, the appropriate EPA Regional Office and the permitting authority written notice of the dates of certification in accordance with § 97.73.

(ii) *Certification application*. The NO_X authorized account representative shall submit to the Administrator, the appropriate EPA Regional Office and the permitting authority a certification application for each emission monitoring system required under subpart H of part 75 of this chapter. A complete certification application shall include the information specified in subpart H of part 75 of this chapter.

(iii) Except for units using the low mass emission excepted methodology under § 75.19 of this chapter, the provisional certification date for a monitor shall be determined in accordance with § 75.20(a)(3) of this chapter. A provisionally certified monitor may be used under the NO_X Budget Trading Program for a period not to exceed 120 days after receipt by the Administrator of the complete certification application for the monitoring system under paragraph (b)(3)(ii) of this section. Data measured and recorded by the provisionally certified monitoring system, in accordance with the requirements of part 75 of this chapter, will be considered valid quality-assured data (retroactive to the date and time of provisional certification), provided that the Administrator does not invalidate the provisional certification by issuing a notice of disapproval within 120 days of receipt of the complete certification application by the Administrator.

(iv) *Certification application formal approval process*. The Administrator will issue a written notice of approval or disapproval of the certification application to the owner or operator within 120 days of receipt of the complete certification application under paragraph (b)(3)(ii) of this section. In the event the Administrator does not issue such a notice within such 120-day period, each monitoring system that meets the applicable performance requirements of part 75 of this chapter and is included in the certification application will be deemed certified for use under the NO_X Budget Trading Program.

(A) *Approval notice*. If the certification application is complete and shows that each monitoring system meets the applicable performance requirements of part 75 of this chapter, then the Administrator will issue a written notice of approval of the certification application within 120 days of receipt.

(B) *Incomplete application notice*. A certification application will be considered complete when all of the applicable information required to be submitted under paragraph (b)(3)(ii) of this section has been received by the Administrator. If the certification application is not complete, then the Administrator will issue a written notice of incompleteness that sets a reasonable date by which the NO_X authorized account representative must submit the additional information required to complete the certification application. If the NO_X authorized account representative does not comply with the notice of incompleteness by the specified date, then the Administrator may issue a notice of disapproval under paragraph (b)(3)(iv)(C) of this section. The 120-day review period shall not begin prior to receipt of a complete certification application.

(C) *Disapproval notice.* If the certification application shows that any monitoring system or component thereof does not meet the performance requirements of this part, or if the certification application is incomplete and the requirement for disapproval under paragraph (b)(3)(iv)(B) of this section has been met, then the Administrator will issue a written notice of disapproval of the certification application. Upon issuance of such notice of disapproval, the provisional certification is invalidated by the Administrator and the data measured and recorded by each uncertified monitoring system shall not be considered valid quality-assured data beginning with the date and hour of provisional certification (as defined under §75.20(a)(3) of this chapter). The owner or operator shall follow the procedures for loss of certification in paragraph (b)(3)(v) of this section for each monitoring system that is disapproved for initial certification.

(D) *Audit decertification.* The Administrator may issue a notice of disapproval of the certification status of a monitor in accordance with §97.72(b).

(v) *Procedures for loss of certification.* If the Administrator issues a notice of disapproval of a certification application under paragraph (b)(3)(iv)(C) of this section or a notice of disapproval of certification status under paragraph (b)(3)(iv)(D) of this section, then:

(A) The owner or operator shall substitute the following values, for each hour of unit operation during the period of invalid data specified under §75.20(a)(4)(iii), §75.20(b)(5), §75.20(h)(4), or §75.21(e) and continuing until the date and hour specified under §75.20(a)(5)(i) of this chapter:

(*1*) For units that the owner or operator intends to monitor or monitors for NO_X emission rate and heat input rate or intends to determine or determines NO_X mass emissions using the low mass emission excepted methodology under §75.19 of this chapter, the maximum potential NO_X emission rate and the maximum potential hourly heat input of the unit; and

(*2*) For units that the owner or operator intends to monitor or monitors for NO_X mass emissions using a NO_X pollutant concentration monitor and a flow monitor, the maximum potential concentration of NO_X and the maximum potential flow rate of the unit under section 2 of appendix A of part 75 of this chapter.

(B) The NO_X authorized account representative shall submit a notification of certification retest dates and a new certification application in accordance with paragraphs (b)(3)(i) and (ii) of this section.

(C) The owner or operator shall repeat all certification tests or other requirements that were failed by the monitoring system, as indicated in the Administrator's notice of disapproval, no later than 30 unit operating days after the date of issuance of the notice of disapproval.

(c) *Initial certification and recertification procedures for low mass emission units using the excepted methodologies under §75.19 of this chapter.* The owner or operator of a gas-fired or oil-fired unit using the low mass emissions excepted methodology under §75.19 of this chapter and not subject to an Acid Rain emissions limitation shall meet the applicable general operating requirements of §75.10 of this chapter and the applicable requirements of §75.19 of this chapter. The owner or operator of such a unit shall also meet the applicable certification and recertification procedures of paragraph (b) of this section, except that the excepted methodology shall be deemed provisionally certified for use under the NO_X Budget Trading Program as of the date on which a complete certification application is received by the Administrator. The methodology shall be considered to be certified either upon receipt of a written notice of approval from the Administrator or, if such notice is not provided, at the end of the Administrator's 120 day review period. However, a provisionally certified or certified low mass emissions excepted methodology shall not be used to report data under the NO_X Budget Trading Program prior to the applicable commencement date specified in §75.19(a)(1)(ii) of this chapter.

(d) *Certification/recertification procedures for alternative monitoring systems.* The NO_X authorized account representative of each unit not subject to an Acid Rain emissions limitation for

which the owner or operator intends to use an alternative monitoring system approved by the Administrator under subpart E of part 75 of this chapter shall comply with the applicable certification procedures of paragraph (b) of this section before using the system under the NO_X Budget Trading Program. The NO_X authorized account representative shall also comply with the applicable recertification procedures of paragraph (b) of this section. Section 75.20(f) of this chapter shall apply to such alternative monitoring system.

[65 FR 2727, Jan. 18, 2000, as amended at 69 FR 21647, Apr. 21, 2004]

§ 97.72 Out of control periods.

(a) Whenever any emission monitoring system fails to meet the quality assurance or data validation requirements of part 75 of this chapter, data shall be substituted using the applicable procedures in subpart D, subpart H, appendix D, or appendix E of part 75 of this chapter.

(b) *Audit decertification.* Whenever both an audit of an emission monitoring system and a review of the initial certification or recertification application reveal that any system should not have been certified or recertified because it did not meet a particular performance specification or other requirement under § 97.71 or the applicable provisions of part 75 of this chapter, both at the time of the initial certification or recertification application submission and at the time of the audit, the Administrator will issue a notice of disapproval of the certification status of such system. For the purposes of this paragraph, an audit shall be either a field audit or an audit of any information submitted to the permitting authority or the Administrator. By issuing the notice of disapproval, the Administrator revokes prospectively the certification status of the system. The data measured and recorded by the system shall not be considered valid quality-assured data from the date of issuance of the notification of the revoked certification status until the date and time that the owner or operator completes subsequently approved initial certification or recertification tests for the system. The owner or operator shall follow the initial certification or recertification procedures in § 97.71 for each disapproved system.

[65 FR 2727, Jan. 18, 2000, as amended at 69 FR 21648, Apr. 21, 2004]

§ 97.73 Notifications.

(a) The NO_X authorized account representative for a NO_X Budget unit shall submit written notice to the Administrator, the appropriate EPA Regional Office, and the permitting authority in accordance with § 75.61 of this chapter.

(b) For any unit that does not have an Acid Rain emissions limitation, the permitting authority may waive the requirement to notify the permitting authority in paragraph (a) of this section.

§ 97.74 Recordkeeping and reporting.

(a) *General provisions.* (1) The NO_X authorized account representative shall comply with all recordkeeping and reporting requirements in this section, with the recordkeeping and reporting requirements under § 75.73 of this chapter, and with the requirements of § 97.10(e)(1).

(2) If the NO_X authorized account representative for a NO_X Budget unit subject to an Acid Rain emission limitation who signed and certified any submission that is made under subpart F or G of part 75 of this chapter and that includes data and information required under this subpart or subpart H of part 75 of this chapter is not the same person as the designated representative or the alternative designated representative for the unit under part 72 of this chapter, then the submission must also be signed by the designated representative or the alternative designated representative.

(b) *Monitoring plans.* (1) The owner or operator of a unit subject to an Acid Rain emissions limitation shall comply with requirements of § 75.62 of this chapter, except that the monitoring plan shall also include all of the information required by subpart H of part 75 of this chapter.

(2) The owner or operator of a unit that is not subject to an Acid Rain emissions limitation shall comply with requirements of § 75.62 of this chapter, except that the monitoring plan is only

required to include the information required by subpart H of part 75 of this chapter.

(c) *Certification applications*. The NO_X authorized account representative shall submit an application to the Administrator, the appropriate EPA Regional Office, and the permitting authority within 45 days after completing all initial certification or recertification tests required under §97.71 including the information required under subpart H of part 75 of this chapter.

(d) *Quarterly reports*. The NO_X authorized account representative shall submit quarterly reports, as follows:

(1) If a unit is subject to an Acid Rain emission limitation or if the owner or operator of the NO_X budget unit chooses to meet the annual reporting requirements of this subpart H, the NO_X authorized account representative shall submit a quarterly report for each calendar quarter beginning with:

(i) For a unit for which the owner or operator intends to apply or applies for the early reduction credits under §97.43, the calendar quarter that covers May 1, 2000 through June 30, 2000. The NO_X mass emission data shall be recorded and reported from the first hour on May 1, 2000; or

(ii) For a unit that commences operation before January 1, 2003 and that is not subject to paragraph (d)(1)(i) of this section, the calendar quarter covering May 1, 2003 through June 30, 2003. The NO_X mass emission data shall be recorded and reported from the first hour on May 1, 2003; or

(iii) For a unit that commences operation on or after January 1, 2003:

(A) The calendar quarter in which the unit commences operation, if unit operation commences during a control period. The NO_X mass emission data shall be recorded and reported from the date and hour when the unit commences operation; or

(B) The calendar quarter which includes May 1 through June 30 of the first control period following the date on which the unit commences operation, if the unit does not commence operation during a control period. The NO_X mass emission data shall be recorded and reported from the first hour on May 1 of that control period; or

(iv) A calendar quarter before the quarter specified in paragraph (d)(1)(i), (d)(1)(ii), or (d)(1)(iii)(B) of this section, if the owner or operator elects to begin reporting early under §97.70(c)(3).

(2) If a NO_X budget unit is not subject to an Acid Rain emission limitation, then the NO_X authorized account representative shall either:

(i) Meet all of the requirements of part 75 related to monitoring and reporting NO_X mass emissions during the entire year and meet the deadlines specified in paragraph (d)(1) of this section; or

(ii) Submit quarterly reports, documenting NO_X mass emissions from the unit, only for the period from May 1 through September 30 of each year and including the data described in §75.74(c)(6) of this chapter. The NO_X authorized account representative shall submit such quarterly reports, beginning with:

(A) For a unit for which the owner or operator intends to apply or applies for the early reduction credits under §97.43, the calendar quarter that covers May 1, 2000 through June 30, 2000. The NO_X mass emission data shall be recorded and reported from the first hour on May 1, 2000; or

(B) For a unit that commences operation before January 1, 2003 and that is not subject to paragraph (d)(2)(ii)(A) of this section, the calendar quarter covering May 1, 2003 through June 30, 2003. The NO_X mass emission data shall be recorded and reported from the first hour on May 1, 2003; or

(C) For a unit that commences operation on or after January 1, 2003 and during a control period, the calendar quarter in which the unit commences operation. The NO_X mass emission data shall be recorded and reported from the date and hour when the unit commences operation; or

(D) For a unit that commences operation on or after January 1, 2003 and not during a control period, the calendar quarter which includes May 1 through June 30 of the first control period following the date on which the unit commences operation. The NO_X mass emission data shall be recorded and reported from the first hour on May 1 of that control period.

(3) The NO_X authorized account representative shall submit each quarterly report to the Administrator within 30 days following the end of the calendar quarter covered by the report. Quarterly reports shall be submitted in the manner specified in subpart H of part 75 of this chapter and § 75.64 of this chapter.

(i) For units subject to an Acid Rain emissions limitation, quarterly reports shall include all of the data and information required in subpart H of part 75 of this chapter for each NO_X Budget unit (or group of units using a common stack) and the data and information required in subpart G of part 75 of this chapter.

(ii) For units not subject to an Acid Rain emissions limitation, quarterly reports are only required to include all of the data and information required in subpart H of part 75 of this chapter for each NO_X Budget unit (or group of units using a common stack).

(4) *Compliance certification.* The NO_X authorized account representative shall submit to the Administrator a compliance certification in support of each quarterly report based on reasonable inquiry of those persons with primary responsibility for ensuring that all of the unit's emissions are correctly and fully monitored. The certification shall state that:

(i) The monitoring data submitted were recorded in accordance with the applicable requirements of this subpart and part 75 of this chapter, including the quality assurance procedures and specifications;

(ii) For a unit with add-on NO_X emission controls and for all hours where data are substituted in accordance with § 75.34(a)(1) of this chapter, the add-on emission controls were operating within the range of parameters listed in the quality assurance/quality control program under appendix B of part 75 of this chapter and the substitute values do not systematically underestimate NO_X emissions; and

(iii) For a unit that is reporting on a control period basis under paragraph (d)(2)(ii) of this section, the NO_X emission rate and NO_X concentration values substituted for missing data under subpart D of part 75 of this chapter are calculated using only values from a control period and do not systematically underestimate NO_X emissions.

[65 FR 2727, Jan. 18, 2000, as amended at 67 FR 21530, Apr. 30, 2002; 69 FR 21648, Apr. 21, 2004]

§ 97.75 Petitions.

(a) The NO_X authorized account representative of a NO_X Budget unit may submit a petition under § 75.66 of this chapter to the Administrator requesting approval to apply an alternative to any requirement of this subpart.

(b) Application of an alternative to any requirement of this subpart is in accordance with this subpart only to the extent that the petition is approved by the Administrator under § 75.66 of this chapter.

§ 97.76 Additional requirements to provide heat input data.

The owner or operator of a NO_X Budget unit that monitors and reports NO_X mass emissions using a NO_X concentration system and a flow system shall also monitor and report heat input rate at the unit level using the procedures set forth in part 75 of this chapter.

Subpart I—Individual Unit Opt-ins.

§ 97.80 Applicability.

A unit that is in a State (as defined in § 97.2), is not a NO_X Budget unit under § 97.4(a), is not a unit exempt under § 97.4(b), vents all of its emissions to a stack, and is operating, may qualify to be a NO_X Budget opt-in unit under this subpart. A unit that is a NO_X Budget unit under § 97.4(a), is covered by an exemption under § 97.4(b) or § 97.5 that is in effect, or is not operating is not eligible to be a NO_X Budget opt-in unit.

§ 97.81 General.

Except otherwise as provided in this part, a NO_X Budget opt-in unit shall be treated as a NO_X Budget unit for purposes of applying subparts A through H of this part.

§ 97.82 NO_X authorized account representative.

A unit for which an application for a NO_X Budget opt-in permit is submitted,

or a NO_X Budget opt-in unit, located at the same source as one or more NO_X Budget units, shall have the same NO_X authorized account representative as such NO_X Budget units.

§ 97.83 Applying for NO_X Budget opt-in permit.

(a) *Applying for initial NO_X Budget opt-in permit.* In order to apply for an initial NO_X Budget opt-in permit, the NO_X authorized account representative of a unit qualified under § 97.80 may submit to the Administrator and the permitting authority at any time, except as provided under § 97.86(g):

(1) A complete NO_X Budget permit application under § 97.22;

(2) A monitoring plan submitted in accordance with subpart H of this part; and

(3) A complete account certificate of representation under § 97.13, if no NO_X authorized account representative has been previously designated for the unit.

(b) *Duty to reapply.* Unless the NO_X Budget opt-in permit is terminated or revised under § 97.86(e) or § 97.87(b)(1)(i), the NO_X authorized account representative of a NO_X Budget opt-in unit shall submit to the Administrator and permitting authority a complete NO_X Budget permit application under § 97.22 to renew the NO_X Budget opt-in permit in accordance with § 97.21(c) and, if applicable, an updated monitoring plan in accordance with subpart H of this part.

§ 97.84 Opt-in process.

The permitting authority will issue or deny an initial NO_X Budget opt-in permit for a unit for which an application for a NO_X Budget opt-in permit under § 97.83 is submitted, in accordance with § 97.20 and the following:

(a) *Interim review of monitoring plan.* The Administrator will determine, on an interim basis, the sufficiency of the monitoring plan accompanying the initial application for a NO_X Budget opt-in permit under § 97.83. A monitoring plan is sufficient, for purposes of interim review, if the plan appears to contain information demonstrating that the NO_X emissions rate and heat input rate of the unit are monitored and reported in accordance with subpart H of this part. A determination of sufficiency shall not be construed as acceptance or approval of the unit's monitoring plan.

(b) If the Administrator determines that the unit's monitoring plan is sufficient under paragraph (a) of this section and after completion of monitoring system certification under subpart H of this part, the NO_X emissions rate and the heat input of the unit shall be monitored and reported in accordance with subpart H of this part for one full control period during which percent monitor data availability is not less than 90 percent and during which the unit is in full compliance with any applicable State or Federal emissions or emissions-related requirements. Solely for purposes of applying the requirements in the prior sentence, the unit shall be treated as a "NO_X Budget unit" prior to issuance of a NO_X Budget opt-in permit covering the unit.

(c) Based on the information monitored and reported under paragraph (b) of this section, the Administrator will calculate the unit's baseline heat input, which will equal the unit's total heat input (in mmBtu) for the control period, and the unit's baseline NO_X emissions rate, which will equal the unit's total NO_X mass emissions (in lb) for the control period divided by the unit's baseline heat input.

(d) *Issuance of draft NO_X Budget opt-in permit for public comment.* The permitting authority will issue a draft NO_X Budget opt-in permit for public comment in accordance with § 97.20.

(e) Not withstanding paragraphs (a) through (d) of this section, if at any time before issuance of a draft NO_X Budget opt-in permit for public comment for the unit, the Administrator or the permitting authority determines that the unit does not qualify as a NO_X Budget opt-in unit under § 97.80, the permitting authority will issue a draft denial of a NO_X Budget opt-in permit for public comment for the unit in accordance with § 97.20.

(f) *Withdrawal of application for NO_X Budget opt-in permit.* A NO_X authorized account representative of a unit may withdraw its application for an initial NO_X Budget opt-in permit under § 97.83 at any time prior to the issuance of the initial NO_X Budget opt-in permit. Once the application for a NO_X Budget opt-in

permit is withdrawn, a NO_X authorized account representative wanting to reapply must submit a new application for an initial NO_X Budget permit under § 97.83.

(g) The unit shall be a NO_X Budget opt-in unit and a NO_X Budget unit starting May 1 of the first control period starting after the issuance of the initial NO_X Budget opt-in permit by the permitting authority.

§ 97.85 NO_X Budget opt-in permit contents.

(a) Each NO_X Budget opt-in permit will contain all elements required for a complete NO_X Budget opt-in permit application under § 97.22.

(b) Each NO_X Budget opt-in permit is deemed to incorporate automatically the definitions of terms under § 97.2 and, upon recordation by the Administrator under subpart F or G of this part, every allocation, transfer, or deduction of NO_X allowances to or from the compliance accounts of each NO_X Budget opt-in unit covered by the NO_X Budget opt-in permit or the overdraft account of the NO_X Budget source where the NO_X Budget opt-in unit is located.

§ 97.86 Withdrawal from NO_X Budget Trading Program.

(a) *Requesting withdrawal.* To withdraw from the NO_X Budget Trading Program, the NO_X authorized account representative of a NO_X Budget opt-in unit shall submit to the Administrator and the permitting authority a request to withdraw effective as of a specified date prior to May 1 or after September 30. The submission shall be made no later than 90 days prior to the requested effective date of withdrawal.

(b) *Conditions for withdrawal.* Before a NO_X Budget opt-in unit covered by a request under paragraph (a) of this section may withdraw from the NO_X Budget Trading Program and the NO_X Budget opt-in permit may be terminated under paragraph (e) of this section, the following conditions must be met:

(1) For the control period immediately before the withdrawal is to be effective, the NO_X authorized account representative must submit or must have submitted to the Administrator and the permitting authority an annual compliance certification report in accordance with § 97.30.

(2) If the NO_X Budget opt-in unit has excess emissions for the control period immediately before the withdrawal is to be effective, the Administrator will deduct or has deducted from the NO_X Budget opt-in unit's compliance account, or the overdraft account of the NO_X Budget source where the NO_X Budget opt-in unit is located, the full amount required under § 97.54(d) for the control period.

(3) After the requirements for withdrawal under paragraphs (b)(1) and (2) of this section are met, the Administrator will deduct from the NO_X Budget opt-in unit's compliance account, or the overdraft account of the NO_X Budget source where the NO_X Budget opt-in unit is located, NO_X allowances equal in number to and allocated for the same or a prior control period as any NO_X allowances allocated to that source under § 97.88 for any control period for which the withdrawal is to be effective. The Administrator will close the NO_X Budget opt-in unit's compliance account and transfer any remaining allowances to a general account specified by the owners and operators of the NO_X Budget opt-in unit.

(c) A NO_X Budget opt-in unit that withdraws from the NO_X Budget Trading Program shall comply with all requirements under the NO_X Budget Trading Program concerning all years for which such NO_X Budget opt-in unit was a NO_X Budget opt-in unit, even if such requirements arise or must be complied with after the withdrawal takes effect.

(d) *Notification.* (1) After the requirements for withdrawal under paragraphs (a) and (b) of this section are met (including deduction of the full amount of NO_X allowances required), the Administrator will issue a notification to the permitting authority and the NO_X authorized account representative of the NO_X Budget opt-in unit of the acceptance of the withdrawal of the NO_X Budget opt-in unit as of a specified effective date that is after such requirements have been met and that is prior to May 1 or after September 30.

(2) If the requirements for withdrawal under paragraphs (a) and (b) of

this section are not met, the Administrator will issue a notification to the permitting authority and the NO_X authorized account representative of the NO_X Budget opt-in unit that the request to withdraw is denied. If the NO_X Budget opt-in unit's request to withdraw is denied, the NO_X Budget opt-in unit shall remain subject to the requirements for a NO_X Budget opt-in unit.

(e) *Permit revision.* After the Administrator issues a notification under paragraph (d)(1) of this section that the requirements for withdrawal have been met, the permitting authority will revise the NO_X Budget permit covering the NO_X Budget opt-in unit to terminate the NO_X Budget opt-in permit as of the effective date specified under paragraph (d)(1) of this section. A NO_X Budget opt-in unit shall continue to be a NO_X Budget opt-in unit until the effective date of the termination.

(f) *Reapplication upon failure to meet conditions of withdrawal.* If the Administrator denies the request to withdraw the NO_X Budget opt-in unit, the NO_X authorized account representative may submit another request to withdraw in accordance with paragraphs (a) and (b) of this section.

(g) *Ability to return to the NO_X Budget Trading Program.* Once a NO_X Budget opt-in unit withdraws from the NO_X Budget Trading Program and its NO_X Budget opt-in permit is terminated under paragraph (e) of this section, the NO_X authorized account representative may not submit another application for a NO_X Budget opt-in permit under §97.83 for the unit prior to the date that is 4 years after the date on which the terminated NO_X Budget opt-in permit became effective.

§97.87 Change in regulatory status.

(a) *Notification.* When a NO_X Budget opt-in unit becomes a NO_X Budget unit under §97.4(a), the NO_X authorized account representative shall notify in writing the permitting authority and the Administrator of such change in the NO_X Budget opt-in unit's regulatory status, within 30 days of such change.

(b) *Permitting authority's and Administrator's action.* (1)(i) When the NO_X Budget opt-in unit becomes a NO_X Budget unit under §97.4(a), the permitting authority will revise the NO_X Budget opt-in unit's NO_X Budget opt-in permit to meet the requirements of a NO_X Budget permit under §97.23 as of an effective date that is the date on which such NO_X Budget opt-in unit becomes a NO_X Budget unit under §97.4(a).

(ii)(A) The Administrator will deduct from the compliance account for the NO_X Budget unit under paragraph (b)(1)(i) of this section, or the overdraft account of the NO_X Budget source where the unit is located, NO_X allowances equal in number to and allocated for the same or a prior control period as:

(*1*) Any NO_X allowances allocated to the NO_X Budget unit (as a NO_X Budget opt-in unit) under §97.88 for any control period after the last control period during which the unit's NO_X Budget opt-in permit was effective; and

(*2*) If the effective date of the NO_X Budget permit revision under paragraph (b)(1)(i) of this section is during a control period, the NO_X allowances allocated to the NO_X Budget unit (as a NO_X Budget opt-in unit) under §97.88 for the control period multiplied by the number of days in the control period starting with the effective date of the permit revision under paragraph (b)(1)(i) of this section, divided by the total number of days in the control period, and rounded to the nearest whole number of NO_X allowances as appropriate.

(B) The NO_X authorized account representative shall ensure that the compliance account of the NO_X Budget unit under paragraph (b)(1)(i) of this section, or the overdraft account of the NO_X Budget source where the unit is located, contains the NO_X allowances necessary for completion of the deduction under paragraph (b)(1)(ii)(A) of this section. If the compliance account or overdraft account does not contain the necessary NO_X allowances, the Administrator will deduct the required number of NO_X allowances, regardless of the control period for which they were allocated, whenever NO_X allowances are recorded in either account.

(iii)(A) For every control period during which the NO_X Budget permit revised under paragraph (b)(1)(i) of this

section is in effect, the NO_X Budget unit under paragraph (b)(1)(i) of this section will be treated, solely for purposes of NO_X allowance allocations under § 97.42, as a unit that commenced operation on the effective date of the NO_X Budget permit revision under paragraph (b)(1)(i) of this section and will be allocated NO_X allowances under § 97.42. The unit's deadline under § 97.84(b) for meeting monitoring requirements in accordance with subpart H of this part shall not be changed by the change in the unit's regulatory status or by the revision of the NO_X Budget permit under paragraph (b)(1)(i) of this section.

(B) Notwithstanding paragraph (b)(1)(iii)(A) of this section, if the effective date of the NO_X Budget permit revision under paragraph (b)(1)(i) of this section is during a control period, the following number of NO_X allowances will be allocated to the NO_X Budget unit under paragraph (b)(1)(i) of this section under § 97.42 for the control period: the number of NO_X allowances otherwise allocated to the NO_X Budget unit under § 97.42 for the control period multiplied by the number of days in the control period starting with the effective date of the permit revision under paragraph (b)(1)(i) of this section, divided by the total number of days in the control period, and rounded to the nearest whole number of NO_X allowances as appropriate.

(2)(i) When the NO_X authorized account representative of a NO_X Budget opt-in unit does not renew its NO_X Budget opt-in permit under § 97.83(b), the Administrator will deduct from the NO_X Budget opt-in unit's compliance account, or the overdraft account of the NO_X Budget source where the NO_X Budget opt-in unit is located, NO_X allowances equal in number to and allocated for the same or a prior control period as any NO_X allowances allocated to the NO_X Budget opt-in unit under § 97.88 for any control period after the last control period for which the NO_X Budget opt-in permit is effective. The NO_X authorized account representative shall ensure that the NO_X Budget opt-in unit's compliance account or the overdraft account of the NO_X Budget source where the NO_X Budget opt-in unit is located contains the NO_X allowances necessary for completion of such deduction. If the compliance account or overdraft account does not contain the necessary NO_X allowances, the Administrator will deduct the required number of NO_X allowances, regardless of the control period for which they were allocated, whenever NO_X allowances are recorded in either account.

(ii) After the deduction under paragraph (b)(2)(i) of this section is completed, the Administrator will close the NO_X Budget opt-in unit's compliance account. If any NO_X allowances remain in the compliance account after completion of such deduction and any deduction under § 97.54, the Administrator will close the NO_X Budget opt-in unit's compliance account and transfer any remaining allowances to a general account specified by the owners and operators of the NO_X Budget opt-in unit.

[65 FR 2727, Jan. 18, 2000, as amended at 69 FR 21648, Apr. 21, 2004]

§ 97.88 NO_X allowance allocations to opt-in units.

(a) *NO_X allotment allocation.* (1) By April 1 immediately before the first control period for which the NO_X Budget opt-in permit is effective, the Administrator will determine by order the NO_X allowance allocations for the NO_X Budget opt-in unit for the control period in accordance with paragraph (b) of this section.

(2) By no later than April 1, after the first control period for which the NO_X Budget opt-in permit is in effect, and April 1 of each year thereafter, the Administrator will determine by order the NO_X allowance allocations for the NO_X Budget opt-in unit for the next control period, in accordance with paragraph (b) of this section.

(3) The Administrator will make available to the public each determination of NO_X allowance allocations under paragraph (a)(1) or (2) of this section and will provide an opportunity for submission of objections to the determination. Objections shall be limited to addressing whether the determination is in accordance with paragraph (b) of this section. Based on any such objections, the Administrator will adjust each determination to the extent necessary to ensure that it is in

accordance with paragraph (b) of this section.

(b) For each control period for which the NO_X Budget opt-in unit has an approved NO_X Budget opt-in permit, the NO_X Budget opt-in unit will be allocated NO_X allowances in accordance with the following procedures:

(1) The heat input (in mmBtu) used for calculating NO_X allowance allocations will be the lesser of:

(i) The unit's baseline heat input determined pursuant to § 97.84(c); or

(ii) The unit's heat input, as determined in accordance with subpart H of this part, for the control period in the year prior to the year of the control period for which the NO_X allocations are being calculated.

(2) The Administrator will allocate NO_X allowances to the unit in an amount equaling the heat input determined under paragraph (b)(1) of this section multiplied by the lesser of the unit's baseline NO_X emissions rate determined under § 97.84(c) or the most stringent State or federal NO_X emissions limitation applicable to the unit during the control period, divided by 2,000 lb/ton, and rounded to the nearest whole number of NO_X allowances as appropriate.

Subpart J—Appeal Procedures

§ 97.90 Appeal procedures.

The appeal procedures for the NO_X Budget Trading Program are set forth in part 78 of this chapter.

[69 FR 21648, Apr. 21, 2004]

Subpart AA—CAIR NO_X Annual Trading Program General Provisions

§ 97.101 Purpose.

This subpart and subparts BB through II set forth the general provisions and the designated representative, permitting, allowance, monitoring, and opt-in provisions for the Federal Clean Air Interstate Rule (CAIR) NO_X Annual Trading Program, under section 110 of the Clean Air Act and § 52.35 of this chapter, as a means of mitigating interstate transport of fine particulates and nitrogen oxides.

§ 97.102 Definitions.

The terms used in this subpart and subparts BB through II shall have the meanings set forth in this section as follows:

Account number means the identification number given by the Administrator to each CAIR NO_X Allowance Tracking System account.

Acid Rain emissions limitation means a limitation on emissions of sulfur dioxide or nitrogen oxides under the Acid Rain Program.

Acid Rain Program means a multistate sulfur dioxide and nitrogen oxides air pollution control and emission reduction program established by the Administrator under title IV of the CAA and parts 72 through 78 of this chapter.

Actual weighted average NO_X emission rate means, for a NO_X averaging plan under § 76.11 of this chapter and for a year:

(1) The sum of the products of the actual annual average NO_X emission rate and actual annual heat input (as determined in accordance with part 75 of this chapter) for all units in the NO_X averaging plan for the year; divided by

(2) The sum of the actual annual heat input (as determined in accordance with part 75 of this chapter) for all units in the NO_X averaging plan for the year.

Administrator means the Administrator of the United States Environmental Protection Agency or the Administrator's duly authorized representative.

Allocate or *allocation* means, with regard to CAIR NO_X allowances, the determination by a permitting authority or the Administrator of the amount of such CAIR NO_X allowances to be initially credited to a CAIR NO_X unit, a new unit set-aside, or other entity.

Allowance transfer deadline means, for a control period, midnight of March 1 (if it is a business day), or midnight of the first business day thereafter (if March 1 is not a business day), immediately following the control period and is the deadline by which a CAIR NO_X allowance transfer must be submitted for recordation in a CAIR NO_X source's compliance account in order to be used to meet the source's CAIR NO_X emissions limitation for such control period in accordance with § 97.154.

Alternate CAIR designated representative means, for a CAIR NO_X source and each CAIR NO_X unit at the source, the natural person who is authorized by the owners and operators of the source and all such units at the source, in accordance with subparts BB and II of this part, to act on behalf of the CAIR designated representative in matters pertaining to the CAIR NO_X Annual Trading Program. If the CAIR NO_X source is also a CAIR SO_2 source, then this natural person shall be the same person as the alternate CAIR designated representative under the CAIR SO_2 Trading Program. If the CAIR NO_X source is also a CAIR NO_X Ozone Season source, then this natural person shall be the same person as the alternate CAIR designated representative under the CAIR NO_X Ozone Season Trading Program. If the CAIR NO_X source is also subject to the Acid Rain Program, then this natural person shall be the same person as the alternate designated representative under the Acid Rain Program. If the CAIR NO_X source is also subject to the Hg Budget Trading Program, then this natural person shall be the same person as the alternate Hg designated representative under the Hg Budget Trading Program.

Automated data acquisition and handling system or *DAHS* means that component of the continuous emission monitoring system, or other emissions monitoring system approved for use under subpart HH of this part, designed to interpret and convert individual output signals from pollutant concentration monitors, flow monitors, diluent gas monitors, and other component parts of the monitoring system to produce a continuous record of the measured parameters in the measurement units required by subpart HH of this part.

Biomass means—

(1) Any organic material grown for the purpose of being converted to energy;

(2) Any organic byproduct of agriculture that can be converted into energy; or

(3) Any material that can be converted into energy and is nonmerchantable for other purposes, that is segregated from other nonmerchantable material, and that is;

(i) A forest-related organic resource, including mill residues, precommercial thinnings, slash, brush, or byproduct from conversion of trees to merchantable material; or

(ii) A wood material, including pallets, crates, dunnage, manufacturing and construction materials (other than pressure-treated, chemically-treated, or painted wood products), and landscape or right-of-way tree trimmings.

Boiler means an enclosed fossil- or other-fuel-fired combustion device used to produce heat and to transfer heat to recirculating water, steam, or other medium.

Bottoming-cycle cogeneration unit means a cogeneration unit in which the energy input to the unit is first used to produce useful thermal energy and at least some of the reject heat from the useful thermal energy application or process is then used for electricity production.

CAIR authorized account representative means, with regard to a general account, a responsible natural person who is authorized, in accordance with subparts BB, FF, and II of this part, to transfer and otherwise dispose of CAIR NO_X allowances held in the general account and, with regard to a compliance account, the CAIR designated representative of the source.

CAIR designated representative means, for a CAIR NO_X source and each CAIR NO_X unit at the source, the natural person who is authorized by the owners and operators of the source and all such units at the source, in accordance with subparts BB and II of this part, to represent and legally bind each owner and operator in matters pertaining to the CAIR NO_X Annual Trading Program. If the CAIR NO_X source is also a CAIR SO_2 source, then this natural person shall be the same person as the CAIR designated representative under the CAIR SO_2 Trading Program. If the CAIR NO_X source is also a CAIR NO_X Ozone Season source, then this natural person shall be the same person as the CAIR designated representative under the CAIR NO_X Ozone Season Trading Program. If the CAIR NO_X source is also subject to the Acid Rain Program, then this natural person shall be the

same person as the designated representative under the Acid Rain Program. If the CAIR NO_X source is also subject to the Hg Budget Trading Program, then this natural person shall be the same person as the Hg designated representative under the Hg Budget Trading Program.

CAIR NO_X allowance means a limited authorization issued by a permitting authority or the Administrator under subpart EE of this part or § 97.188, or under provisions of a State implementation plan that are approved under § 51.123(o)(1) or (2) or (p) of this chapter, to emit one ton of nitrogen oxides during a control period of the specified calendar year for which the authorization is allocated or of any calendar year thereafter under the CAIR NO_X Program. An authorization to emit nitrogen oxides that is not issued under subpart EE of this part, § 97.188, or provisions of a State implementation plan that are approved under § 51.123(o)(1) or (2) or (p) of this chapter shall not be a CAIR NO_X allowance.

CAIR NO_X allowance deduction or deduct CAIR NO_X allowances means the permanent withdrawal of CAIR NO_X allowances by the Administrator from a compliance account, *e.g.*, in order to account for a specified number of tons of total nitrogen oxides emissions from all CAIR NO_X units at a CAIR NO_X source for a control period, determined in accordance with subpart HH of this part, or to account for excess emissions.

CAIR NO_X Allowance Tracking System means the system by which the Administrator records allocations, deductions, and transfers of CAIR NO_X allowances under the CAIR NO_X Annual Trading Program. Such allowances will be allocated, held, deducted, or transferred only as whole allowances.

CAIR NO_X Allowance Tracking System account means an account in the CAIR NO_X Allowance Tracking System established by the Administrator for purposes of recording the allocation, holding, transferring, or deducting of CAIR NO_X allowances.

CAIR NO_X allowances held or *hold CAIR NO_X allowances* means the CAIR NO_X allowances recorded by the Administrator, or submitted to the Administrator for recordation, in accordance with subparts FF, GG, and II of this part, in a CAIR NO_X Allowance Tracking System account.

CAIR NO_X Annual Trading Program means a multi-state nitrogen oxides air pollution control and emission reduction program established by the Administrator in accordance with subparts AA through II of this part and §§ 51.123(p) and 52.35 of this chapter or approved and administered by the Administrator in accordance with subparts AA through II of part 96 of this chapter and § 51.123(o)(1) or (2) of this chapter, as a means of mitigating interstate transport of fine particulates and nitrogen oxides.

CAIR NO_X emissions limitation means, for a CAIR NO_X source, the tonnage equivalent, in NO_X emissions in a control period, of the CAIR NO_X allowances available for deduction for the source under § 97.154 (a) and (b) for the control period.

CAIR NO_X Ozone Season source means a source that is subject to the CAIR NO_X Ozone Season Trading Program.

CAIR NO_X Ozone Season Trading Program means a multi-state nitrogen oxides air pollution control and emission reduction program established by the Administrator in accordance with subparts AAAA through IIII of this part and §§ 51.123(ee) and 52.35 of this chapter or approved and administered by the Administrator in accordance with subparts AAAA through IIII of part 96 and § 51.123(aa)(1) or (2) (and (bb)(1)), (bb)(2), or (dd) of this chapter, as a means of mitigating interstate transport of ozone and nitrogen oxides.

CAIR NO_X source means a source that includes one or more CAIR NO_X units.

CAIR NO_X unit means a unit that is subject to the CAIR NO_X Annual Trading Program under § 97.104 and, except for purposes of § 97.105 and subpart EE of this part, a CAIR NO_X opt-in unit under subpart II of this part.

CAIR permit means the legally binding and federally enforceable written document, or portion of such document, issued by the permitting authority under subpart CC of this part, including any permit revisions, specifying the CAIR NO_X Annual Trading Program requirements applicable to a CAIR NO_X source, to each CAIR NO_X unit at the source, and to the owners

and operators and the CAIR designated representative of the source and each such unit.

CAIR SO_2 source means a source that is subject to the CAIR SO_2 Trading Program.

CAIR SO_2 Trading Program means a multi-state sulfur dioxide air pollution control and emission reduction program established by the Administrator in accordance with subparts AAA through III of this part and §§ 51.124(r) and 52.36 of this chapter or approved and administered by the Administrator in accordance with subparts AAA through III of part 96 of this chapter and § 51.124(o)(1) or (2) of this chapter, as a means of mitigating interstate transport of fine particulates and sulfur dioxide.

Certifying official means:

(1) For a corporation, a president, secretary, treasurer, or vice-president or the corporation in charge of a principal business function or any other person who performs similar policy or decision-making functions for the corporation;

(2) For a partnership or sole proprietorship, a general partner or the proprietor respectively; or

(3) For a local government entity or State, Federal, or other public agency, a principal executive officer or ranking elected official.

Clean Air Act or *CAA* means the Clean Air Act, 42 U.S.C. 7401, *et seq*.

Coal means any solid fuel classified as anthracite, bituminous, subbituminous, or lignite.

Coal-derived fuel means any fuel (whether in a solid, liquid, or gaseous state) produced by the mechanical, thermal, or chemical processing of coal.

Coal-fired means:

(1) Except for purposes of subpart EE of this part, combusting any amount of coal or coal-derived fuel, alone or in combination with any amount of any other fuel, during any year; or

(2) For purposes of subpart EE of this part, combusting any amount of coal or coal-derived fuel, alone or in combination with any amount of any other fuel, during a specified year.

Cogeneration unit means a stationary, fossil-fuel-fired boiler or stationary, fossil-fuel-fired combustion turbine:

(1) Having equipment used to produce electricity and useful thermal energy for industrial, commercial, heating, or cooling purposes through the sequential use of energy; and

(2) Producing during the 12-month period starting on the date the unit first produces electricity and during any calendar year after the calendar year in which the unit first produces electricity—

(i) For a topping-cycle cogeneration unit, (A) Useful thermal energy not less than 5 percent of total energy output; and

(B) Useful power that, when added to one-half of useful thermal energy produced, is not less then 42.5 percent of total energy input, if useful thermal energy produced is 15 percent or more of total energy output, or not less than 45 percent of total energy input, if useful thermal energy produced is less than 15 percent of total energy output.

(ii) For a bottoming-cycle cogeneration unit, useful power not less than 45 percent of total energy input;

(3) Provided that the total energy input under paragraphs (2)(i)(B) and (2)(ii) of this definition shall equal the unit's total energy input from all fuel except biomass if the unit is a boiler.

Combustion turbine means:

(1) An enclosed device comprising a compressor, a combustor, and a turbine and in which the flue gas resulting from the combustion of fuel in the combustor passes through the turbine, rotating the turbine; and

(2) If the enclosed device under paragraph (1) of this definition is combined cycle, any associated duct burner, heat recovery steam generator, and steam turbine.

Commence commercial operation means, with regard to a unit:

(1) To have begun to produce steam, gas, or other heated medium used to generate electricity for sale or use, including test generation, except as provided in § 97.105 and § 97.184(h).

(i) For a unit that is a CAIR NO_X unit under § 97.104 on the later of November 15, 1990 or the date the unit commences commercial operation as defined in paragraph (1) of this definition and that subsequently undergoes a physical change (other than replacement of the unit by a unit at the same source),

such date shall remain the date of commencement of commercial operation of the unit, which shall continue to be treated as the same unit.

(ii) For a unit that is a CAIR NO_X unit under § 97.104 on the later of November 15, 1990 or the date the unit commences commercial operation as defined in paragraph (1) of this definition and that is subsequently replaced by a unit at the same source (*e.g.*, repowered), such date shall remain the replaced unit's date of commencement of commercial operation, and the replacement unit shall be treated as a separate unit with a separate date for commencement of commercial operation as defined in paragraph (1) or (2) of this definition as appropriate.

(2) Notwithstanding paragraph (1) of this definition and except as provided in § 97.105, for a unit that is not a CAIR NO_X unit under § 97.104 on the later of November 15, 1990 or the date the unit commences commercial operation as defined in paragraph (1) of this definition, the unit's date for commencement of commercial operation shall be the date on which the unit becomes a CAIR NO_X unit under § 97.104.

(i) For a unit with a date for commencement of commercial operation as defined in paragraph (2) of this definition and that subsequently undergoes a physical change (other than replacement of the unit by a unit at the same source), such date shall remain the date of commencement of commercial operation of the unit, which shall continue to be treated as the same unit.

(ii) For a unit with a date for commencement of commercial operation as defined in paragraph (2) of this definition and that is subsequently replaced by a unit at the same source (*e.g.*, repowered), such date shall remain the replaced unit's date of commencement of commercial operation, and the replacement unit shall be treated as a separate unit with a separate date for commencement of commercial operation as defined in paragraph (1) or (2) of this definition as appropriate.

Commence operation means:

(1) To have begun any mechanical, chemical, or electronic process, including, with regard to a unit, start-up of a unit's combustion chamber, except as provided in § 97.184(h).

(2) For a unit that undergoes a physical change (other than replacement of the unit by a unit at the same source) after the date the unit commences operation as defined in paragraph (1) of this definition, such date shall remain the date of commencement of operation of the unit, which shall continue to be treated as the same unit.

(3) For a unit that is replaced by a unit at the same source (*e.g.*, repowered) after the date the unit commences operation as defined in paragraph (1) of this definition, such date shall remain the replaced unit's date of commencement of operation, and the replacement unit shall be treated as a separate unit with a separate date for commencement of operation as defined in paragraph (1), (2), or (3) of this definition as appropriate, except as provided in § 97.184(h).

Common stack means a single flue through which emissions from 2 or more units are exhausted.

Compliance account means a CAIR NO_X Allowance Tracking System account, established by the Administrator for a CAIR NO_X source under subpart FF or II of this part, in which any CAIR NO_X allowance allocations for the CAIR NO_X units at the source are initially recorded and in which are held any CAIR NO_X allowances available for use for a control period in order to meet the source's CAIR NO_X emissions limitation in accordance with § 97.154.

Continuous emission monitoring system or *CEMS* means the equipment required under subpart HH of this part to sample, analyze, measure, and provide, by means of readings recorded at least once every 15 minutes (using an automated data acquisition and handling system (DAHS)), a permanent record of nitrogen oxides emissions, stack gas volumetric flow rate, stack gas moisture content, and oxygen or carbon dioxide concentration (as applicable), in a manner consistent with part 75 of this chapter. The following systems are the principal types of continuous emission monitoring systems required under subpart HH of this part:

(1) A flow monitoring system, consisting of a stack flow rate monitor and an automated data acquisition and

handling system and providing a permanent, continuous record of stack gas volumetric flow rate, in standard cubic feet per hour (scfh);

(2) A nitrogen oxides concentration monitoring system, consisting of a NO_X pollutant concentration monitor and an automated data acquisition and handling system and providing a permanent, continuous record of NO_X emissions, in parts per million (ppm);

(3) A nitrogen oxides emission rate (or NO_X-diluent) monitoring system, consisting of a NO_X pollutant concentration monitor, a diluent gas (CO_2 or O_2) monitor, and an automated data acquisition and handling system and providing a permanent, continuous record of NO_X concentration, in parts per million (ppm), diluent gas concentration, in percent CO_2 or O_2, and NO_X emission rate, in pounds per million British thermal units (lb/mmBtu);

(4) A moisture monitoring system, as defined in §75.11(b)(2) of this chapter and providing a permanent, continuous record of the stack gas moisture content, in percent H_2O;

(5) A carbon dioxide monitoring system, consisting of a CO_2 pollutant concentration monitor (or an oxygen monitor plus suitable mathematical equations from which the CO_2 concentration is derived) and an automated data acquisition and handling system and providing a permanent, continuous record of CO_2 emissions, in percent CO_2; and

(6) An oxygen monitoring system, consisting of an O_2 concentration monitor and an automated data acquisition and handling system and providing a permanent, continuous record of O_2, in percent O_2.

Control period means the period beginning January 1 of a calendar year, except as provided in §97.106(c)(2), and ending on December 31 of the same year, inclusive.

Emissions means air pollutants exhausted from a unit or source into the atmosphere, as measured, recorded, and reported to the Administrator by the CAIR designated representative and as determined by the Administrator in accordance with subpart HH of this part.

Excess emissions means any ton of nitrogen oxides emitted by the CAIR NO_X units at a CAIR NO_X source during a control period that exceeds the CAIR NO_X emissions limitation for the source.

Fossil fuel means natural gas, petroleum, coal, or any form of solid, liquid, or gaseous fuel derived from such material.

Fossil-fuel-fired means, with regard to a unit, combusting any amount of fossil fuel in any calendar year.

Fuel oil means any petroleum-based fuel (including diesel fuel or petroleum derivatives such as oil tar) and any recycled or blended petroleum products or petroleum by-products used as a fuel whether in a liquid, solid, or gaseous state.

General account means a CAIR NO_X Allowance Tracking System account, established under subpart FF of this part, that is not a compliance account.

Generator means a device that produces electricity.

Gross electrical output means, with regard to a cogeneration unit, electricity made available for use, including any such electricity used in the power production process (which process includes, but is not limited to, any on-site processing or treatment of fuel combusted at the unit and any on-site emission controls).

Heat input means, with regard to a specified period of time, the product (in mmBtu/time) of the gross calorific value of the fuel (in Btu/lb) divided by 1,000,000 Btu/mmBtu and multiplied by the fuel feed rate into a combustion device (in lb of fuel/time), as measured, recorded, and reported to the Administrator by the CAIR designated representative and determined by the Administrator in accordance with subpart HH of this part and excluding the heat derived from preheated combustion air, recirculated flue gases, or exhaust from other sources.

Heat input rate means the amount of heat input (in mmBtu) divided by unit operating time (in hr) or, with regard to a specific fuel, the amount of heat input attributed to the fuel (in mmBtu) divided by the unit operating time (in hr) during which the unit combusts the fuel.

Hg Budget Trading Program means a multi-state Hg air pollution control

and emission reduction program approved and administered by the Administrator in accordance subpart HHHH of part 60 of this chapter and § 60.24(h)(6), or established by the Administrator under section 111 of the Clean Air Act, as a means of reducing national Hg emissions.

Life-of-the-unit, firm power contractual arrangement means a unit participation power sales agreement under which a utility or industrial customer reserves, or is entitled to receive, a specified amount or percentage of nameplate capacity and associated energy generated by any specified unit and pays its proportional amount of such unit's total costs, pursuant to a contract:

(1) For the life of the unit;

(2) For a cumulative term of no less than 30 years, including contracts that permit an election for early termination; or

(3) For a period no less than 25 years or 70 percent of the economic useful life of the unit determined as of the time the unit is built, with option rights to purchase or release some portion of the nameplate capacity and associated energy generated by the unit at the end of the period.

Maximum design heat input means the maximum amount of fuel per hour (in Btu/hr) that a unit is capable of combusting on a steady state basis as of the initial installation of the unit as specified by the manufacturer of the unit.

Monitoring system means any monitoring system that meets the requirements of subpart HH of this part, including a continuous emissions monitoring system, an alternative monitoring system, or an excepted monitoring system under part 75 of this chapter.

Most stringent State or Federal NO_X emissions limitation means, with regard to a unit, the lowest NO_X emissions limitation (in terms of lb/mmBtu) that is applicable to the unit under State or Federal law, regardless of the averaging period to which the emissions limitation applies.

Nameplate capacity means, starting from the initial installation of a generator, the maximum electrical generating output (in MWe) that the generator is capable of producing on a steady state basis and during continuous operation (when not restricted by seasonal or other deratings) as of such installation as specified by the manufacturer of the generator or, starting from the completion of any subsequent physical change in the generator resulting in an increase in the maximum electrical generating output (in MWe) that the generator is capable of producing on a steady state basis and during continuous operation (when not restricted by seasonal or other deratings), such increased maximum amount as of such completion as specified by the person conducting the physical change.

Oil-fired means, for purposes of subpart EE of this part, combusting fuel oil for more than 15.0 percent of the annual heat input in a specified year and not qualifying as coal-fired.

Operator means any person who operates, controls, or supervises a CAIR NO_X unit or a CAIR NO_X source and shall include, but not be limited to, any holding company, utility system, or plant manager of such a unit or source.

Owner means any of the following persons:

(1) With regard to a CAIR NO_X source or a CAIR NO_X unit at a source, respectively:

(i) Any holder of any portion of the legal or equitable title in a CAIR NO_X unit at the source or the CAIR NO_X unit;

(ii) Any holder of a leasehold interest in a CAIR NO_X unit at the source or the CAIR NO_X unit; or

(iii) Any purchaser of power from a CAIR NO_X unit at the source or the CAIR NO_X unit under a life-of-the-unit, firm power contractual arrangement; provided that, unless expressly provided for in a leasehold agreement, owner shall not include a passive lessor, or a person who has an equitable interest through such lessor, whose rental payments are not based (either directly or indirectly) on the revenues or income from such CAIR NO_X unit; or

(2) With regard to any general account, any person who has an ownership interest with respect to the CAIR NO_X allowances held in the general account and who is subject to the binding

agreement for the CAIR authorized account representative to represent the person's ownership interest with respect to CAIR NO_X allowances.

Permitting authority means the State air pollution control agency, local agency, other State agency, or other agency authorized by the Administrator to issue or revise permits to meet the requirements of the CAIR NO_X Annual Trading Program or, if no such agency has been so authorized, the Administrator.

Potential electrical output capacity means 33 percent of a unit's maximum design heat input, divided by 3,413 Btu/kWh, divided by 1,000 kWh/MWh, and multiplied by 8,760 hr/yr.

Receive or receipt of means, when referring to the permitting authority or the Administrator, to come into possession of a document, information, or correspondence (whether sent in hard copy or by authorized electronic transmission), as indicated in an official log, or by a notation made on the document, information, or correspondence, by the permitting authority or the Administrator in the regular course of business.

Recordation, *record*, or *recorded* means, with regard to CAIR NO_X allowances, the movement of CAIR NO_X allowances by the Administrator into or between CAIR NO_X Allowance Tracking System accounts, for purposes of allocation, transfer, or deduction.

Reference method means any direct test method of sampling and analyzing for an air pollutant as specified in § 75.22 of this chapter.

Replacement, *replace*, or *replaced* means, with regard to a unit, the demolishing of a unit, or the permanent shutdown and permanent disabling of a unit, and the construction of another unit (the replacement unit) to be used instead of the demolished or shutdown unit (the replaced unit).

Repowered means, with regard to a unit, replacement of a coal-fired boiler with one of the following coal-fired technologies at the same source as the coal-fired boiler:

(1) Atmospheric or pressurized fluidized bed combustion;

(2) Integrated gasification combined cycle;

(3) Magnetohydrodynamics;

(4) Direct and indirect coal-fired turbines;

(5) Integrated gasification fuel cells; or

(6) As determined by the Administrator in consultation with the Secretary of Energy, a derivative of one or more of the technologies under paragraphs (1) through (5) of this definition and any other coal-fired technology capable of controlling multiple combustion emissions simultaneously with improved boiler or generation efficiency and with significantly greater waste reduction relative to the performance of technology in widespread commercial use as of January 1, 2005.

Sequential use of energy means:

(1) For a topping-cycle cogeneration unit, the use of reject heat from electricity production in a useful thermal energy application or process; or

(2) For a bottoming-cycle cogeneration unit, the use of reject heat from useful thermal energy application or process in electricity production.

Serial number means, for a CAIR NO_X allowance, the unique identification number assigned to each CAIR NO_X allowance by the Administrator.

Solid waste incineration unit means a stationary, fossil-fuel-fired boiler or stationary, fossil-fuel-fired combustion turbine that is a ''solid waste incineration unit'' as defined in section 129(g)(1) of the Clean Air Act.

Source means all buildings, structures, or installations located in one or more contiguous or adjacent properties under common control of the same person or persons. For purposes of section 502(c) of the Clean Air Act, a ''source,'' including a ''source'' with multiple units, shall be considered a single ''facility.''

State means one of the States or the District of Columbia that is subject to the CAIR NO_X Annual Trading Program pursuant to § 52.35 of this chapter.

Submit or serve means to send or transmit a document, information, or correspondence to the person specified in accordance with the applicable regulation:

(1) In person;

(2) By United States Postal Service; or

(3) By other means of dispatch or transmission and delivery. Compliance

with any ''submission'' or ''service'' deadline shall be determined by the date of dispatch, transmission, or mailing and not the date of receipt.

Title V operating permit means a permit issued under title V of the Clean Air Act and part 70 or part 71 of this chapter.

Title V operating permit regulations means the regulations that the Administrator has approved or issued as meeting the requirements of title V of the Clean Air Act and part 70 or 71 of this chapter.

Ton means 2,000 pounds. For the purpose of determining compliance with the CAIR NO_X emissions limitation, total tons of nitrogen oxides emissions for a control period shall be calculated as the sum of all recorded hourly emissions (or the mass equivalent of the recorded hourly emission rates) in accordance with subpart HH of this part, but with any remaining fraction of a ton equal to or greater than 0.50 tons deemed to equal one ton and any remaining fraction of a ton less than 0.50 tons deemed to equal zero tons.

Topping-cycle cogeneration unit means a cogeneration unit in which the energy input to the unit is first used to produce useful power, including electricity, and at least some of the reject heat from the electricity production is then used to provide useful thermal energy.

Total energy input means, with regard to a cogeneration unit, total energy of all forms supplied to the cogeneration unit, excluding energy produced by the cogeneration unit itself. Each form of energy supplied shall be measured by the lower heating value of that form of energy calculated as follows:

$$LHV = HHV - 10.55(W + 9H)$$

Where:

LHV = lower heating value of fuel in Btu/lb,
HHV = higher heating value of fuel in Btu/lb,
W = Weight % of moisture in fuel, and
H = Weight % of hydrogen in fuel.

Total energy output means, with regard to a cogeneration unit, the sum of useful power and useful thermal energy produced by the cogeneration unit.

Unit means a stationary, fossil-fuel-fired boiler or combustion turbine or other stationary, fossil-fuel-fired combustion device.

Unit operating day means a calendar day in which a unit combusts any fuel.

Unit operating hour or *hour of unit operation* means an hour in which a unit combusts any fuel.

Useful power means, with regard to a cogeneration unit, electricity or mechanical energy made available for use, excluding any such energy used in the power production process (which process includes, but is not limited to, any on-site processing or treatment of fuel combusted at the unit and any on-site emission controls).

Useful thermal energy means, with regard to a cogeneration unit, thermal energy that is:

(1) Made available to an industrial or commercial process (not a power production process), excluding any heat contained in condensate return or makeup water;

(2) Used in a heating application (*e.g.*, space heating or domestic hot water heating); or

(3) Used in a space cooling application (*i.e.*, thermal energy used by an absorption chiller).

Utility power distribution system means the portion of an electricity grid owned or operated by a utility and dedicated to delivering electricity to customers.

[65 FR 2727, Jan. 18, 2000, as amended at 71 FR 74795, Dec. 13, 2006; 72 FR 59206, Oct. 19, 2007]

§ 97.103 Measurements, abbreviations, and acronyms.

Measurements, abbreviations, and acronyms used in this subpart and subparts BB through II are defined as follows:

Btu—British thermal unit
CO_2—carbon dioxide
H_2O—water
Hg—mercury
hr—hour
kW—kilowatt electrical
kWh—kilowatt hour
lb—pound
mmBtu—million Btu
MWe—megawatt electrical
MWh—megawatt hour
NO_X—nitrogen oxides
O_2—oxygen
ppm—parts per million
scfh—standard cubic feet per hour
SO_2—sulfur dioxide
yr—year

§ 97.104 Applicability

(a) Except as provided in paragraph (b) of this section:

(1) The following units in a State shall be CAIR NO_X units, and any source that includes one or more such units shall be a CAIR NO_X source, subject to the requirements of this subpart and subparts BB through HH of this part: any stationary, fossil-fuel-fired boiler or stationary, fossil-fuel-fired combustion turbine serving at any time, since the later of November 15, 1990 or the start-up of the unit's combustion chamber, a generator with nameplate capacity of more than 25 MWe producing electricity for sale.

(2) If a stationary boiler or stationary combustion turbine that, under paragraph (a)(1) of this section, is not a CAIR NO_X unit begins to combust fossil fuel or to serve a generator with nameplate capacity of more than 25 MWe producing electricity for sale, the unit shall become a CAIR NO_X unit as provided in paragraph (a)(1) of this section on the first date on which it both combusts fossil fuel and serves such generator.

(b) The units in a State that meet the requirements set forth in paragraph (b)(1)(i), (b)(2)(i), or (b)(2)(ii) of this section shall not be CAIR NO_X units:

(1)(i) Any unit that is a CAIR NO_X unit under paragraph (a)(1) or (2) of this section:

(A) Qualifying as a cogeneration unit during the 12-month period starting on the date the unit first produces electricity and continuing to qualify as a cogeneration unit; and

(B) Not serving at any time, since the later of November 15, 1990 or the start-up of the unit's combustion chamber, a generator with nameplate capacity of more than 25 MWe supplying in any calendar year more than one-third of the unit's potential electric output capacity or 219,000 MWh, whichever is greater, to any utility power distribution system for sale.

(ii) If a unit qualifies as a cogeneration unit during the 12-month period starting on the date the unit first produces electricity and meets the requirements of paragraphs (b)(1)(i) of this section for at least one calendar year, but subsequently no longer meets all such requirements, the unit shall become a CAIR NO_X unit starting on the earlier of January 1 after the first calendar year during which the unit first no longer qualifies as a cogeneration unit or January 1 after the first calendar year during which the unit no longer meets the requirements of paragraph (b)(1)(i)(B) of this section.

(2)(i) Any unit that is a CAIR NO_X unit under paragraph (a)(1) or (2) of this section commencing operation before January 1, 1985:

(A) Qualifying as a solid waste incineration unit; and

(B) With an average annual fuel consumption of non-fossil fuel for 1985–1987 exceeding 80 percent (on a Btu basis) and an average annual fuel consumption of non-fossil fuel for any 3 consecutive calendar years after 1990 exceeding 80 percent (on a Btu basis).

(ii) Any unit that is a CAIR NO_X unit under paragraph (a)(1) or (2) of this section commencing operation on or after January 1, 1985:

(A) Qualifying as a solid waste incineration unit; and

(B) With an average annual fuel consumption of non-fossil fuel for the first 3 calendar years of operation exceeding 80 percent (on a Btu basis) and an average annual fuel consumption of non-fossil fuel for any 3 consecutive calendar years after 1990 exceeding 80 percent (on a Btu basis).

(iii) If a unit qualifies as a solid waste incineration unit and meets the requirements of paragraph (b)(2)(i) or (ii) of this section for at least 3 consecutive calendar years, but subsequently no longer meets all such requirements, the unit shall become a CAIR NO_X unit starting on the earlier of January 1 after the first calendar year during which the unit first no longer qualifies as a solid waste incineration unit or January 1 after the first 3 consecutive calendar years after 1990 for which the unit has an average annual fuel consumption of fossil fuel of 20 percent or more.

(c) A certifying official of an owner or operator of any unit may petition the Administrator at any time for a determination concerning the applicability, under paragraphs (a) and (b) of this section, of the CAIR NO_X Annual Trading Program to the unit.

(1) *Petition content*. The petition shall be in writing and include the identification of the unit and the relevant facts about the unit. The petition and any other documents provided to the Administrator in connection with the petition shall include the following certification statement, signed by the certifying official: ''I am authorized to make this submission on behalf of the owners and operators of the unit for which the submission is made. I certify under penalty of law that I have personally examined, and am familiar with, the statements and information submitted in this document and all its attachments. Based on my inquiry of those individuals with primary responsibility for obtaining the information, I certify that the statements and information are to the best of my knowledge and belief true, accurate, and complete. I am aware that there are significant penalties for submitting false statements and information or omitting required statements and information, including the possibility of fine or imprisonment.''

(2) *Submission*. The petition and any other documents provided in connection with the petition shall be submitted to the Director of the Clean Air Markets Division (or its successor), U.S. Environmental Protection Agency, who will act on the petition as the Administrator's duly authorized representative.

(3) *Response*. The Administrator will issue a written response to the petition and may request supplemental information relevant to such petition. The Administrator's determination concerning the applicability, under paragraphs (a) and (b) of this section, of the CAIR NO_X Annual Trading Program to the unit shall be binding on the permitting authority unless the petition or other information or documents provided in connection with the petition are found to have contained significant, relevant errors or omissions.

§ 97.105 Retired unit exemption.

(a)(1) Any CAIR NO_X unit that is permanently retired and is not a CAIR NO_X opt-in unit under subpart II of this part shall be exempt from the CAIR NO_X Annual Trading Program, except for the provisions of this section, §§ 97.102, 97.103, 97.104, 97.106(c)(4) through (7), 97.107, 97.108, and subparts BB and EE through GG of this part.

(2) The exemption under paragraph (a)(1) of this section shall become effective the day on which the CAIR NO_X unit is permanently retired. Within 30 days of the unit's permanent retirement, the CAIR designated representative shall submit a statement to the permitting authority otherwise responsible for administering any CAIR permit for the unit and shall submit a copy of the statement to the Administrator. The statement shall state, in a format prescribed by the permitting authority, that the unit was permanently retired on a specific date and will comply with the requirements of paragraph (b) of this section.

(3) After receipt of the statement under paragraph (a)(2) of this section, the permitting authority will amend any permit under subpart CC of this part covering the source at which the unit is located to add the provisions and requirements of the exemption under paragraphs (a)(1) and (b) of this section.

(b) *Special provisions*. (1) A unit exempt under paragraph (a) of this section shall not emit any nitrogen oxides, starting on the date that the exemption takes effect.

(2) The Administrator or the permitting authority will allocate CAIR NO_X allowances under subpart EE of this part to a unit exempt under paragraph (a) of this section.

(3) For a period of 5 years from the date the records are created, the owners and operators of a unit exempt under paragraph (a) of this section shall retain, at the source that includes the unit, records demonstrating that the unit is permanently retired. The 5-year period for keeping records may be extended for cause, at any time before the end of the period, in writing by the permitting authority or the Administrator. The owners and operators bear the burden of proof that the unit is permanently retired.

(4) The owners and operators and, to the extent applicable, the CAIR designated representative of a unit exempt under paragraph (a) of this section shall comply with the requirements of

the CAIR NO_X Annual Trading Program concerning all periods for which the exemption is not in effect, even if such requirements arise, or must be complied with, after the exemption takes effect.

(5) A unit exempt under paragraph (a) of this section and located at a source that is required, or but for this exemption would be required, to have a title V operating permit shall not resume operation unless the CAIR designated representative of the source submits a complete CAIR permit application under § 97.122 for the unit not less than 18 months (or such lesser time provided by the permitting authority) before the later of January 1, 2009 or the date on which the unit resumes operation.

(6) On the earlier of the following dates, a unit exempt under paragraph (a) of this section shall lose its exemption:

(i) The date on which the CAIR designated representative submits a CAIR permit application for the unit under paragraph (b)(5) of this section;

(ii) The date on which the CAIR designated representative is required under paragraph (b)(5) of this section to submit a CAIR permit application for the unit; or

(iii) The date on which the unit resumes operation, if the CAIR designated representative is not required to submit a CAIR permit application for the unit.

(7) For the purpose of applying monitoring, reporting, and recordkeeping requirements under subpart HH of this part, a unit that loses its exemption under paragraph (a) of this section shall be treated as a unit that commences commercial operation on the first date on which the unit resumes operation.

§ 97.106 Standard requirements.

(a) *Permit requirements.* (1) The CAIR designated representative of each CAIR NO_X source required to have a title V operating permit and each CAIR NO_X unit required to have a title V operating permit at the source shall:

(i) Submit to the permitting authority a complete CAIR permit application under § 97.122 in accordance with the deadlines specified in § 97.121; and

(ii) Submit in a timely manner any supplemental information that the permitting authority determines is necessary in order to review a CAIR permit application and issue or deny a CAIR permit.

(2) The owners and operators of each CAIR NO_X source required to have a title V operating permit and each CAIR NO_X unit required to have a title V operating permit at the source shall have a CAIR permit issued by the permitting authority under subpart CC of this part for the source and operate the source and the unit in compliance with such CAIR permit.

(3) Except as provided in subpart II of this part, the owners and operators of a CAIR NO_X source that is not otherwise required to have a title V operating permit and each CAIR NO_X unit that is not otherwise required to have a title V operating permit are not required to submit a CAIR permit application, and to have a CAIR permit, under subpart CC of this part for such CAIR NO_X source and such CAIR NO_X unit.

(b) *Monitoring, reporting, and recordkeeping requirements.* (1) The owners and operators, and the CAIR designated representative, of each CAIR NO_X source and each CAIR NO_X unit at the source shall comply with the monitoring, reporting, and recordkeeping requirements of subpart HH of this part.

(2) The emissions measurements recorded and reported in accordance with subpart HH of this part shall be used to determine compliance by each CAIR NO_X source with the CAIR NO_X emissions limitation under paragraph (c) of this section.

(c) *Nitrogen oxides emission requirements.* (1) As of the allowance transfer deadline for a control period, the owners and operators of each CAIR NO_X source and each CAIR NO_X unit at the source shall hold, in the source's compliance account, CAIR NO_X allowances available for compliance deductions for the control period under § 97.154(a) in an amount not less than the tons of total nitrogen oxides emissions for the control period from all CAIR NO_X units at the source, as determined in accordance with subpart HH of this part.

(2) A CAIR NO_X unit shall be subject to the requirements under paragraph

(c)(1) of this section for the control period starting on the later of January 1, 2009 or the deadline for meeting the unit's monitor certification requirements under § 97.170(b)(1), (2), or (5) and for each control period thereafter.

(3) A CAIR NO_X allowance shall not be deducted, for compliance with the requirements under paragraph (c)(1) of this section, for a control period in a calendar year before the year for which the CAIR NO_X allowance was allocated.

(4) CAIR NO_X allowances shall be held in, deducted from, or transferred into or among CAIR NO_X Allowance Tracking System accounts in accordance with subparts EE, FF, GG, and II of this part.

(5) A CAIR NO_X allowance is a limited authorization to emit one ton of nitrogen oxides in accordance with the CAIR NO_X Annual Trading Program. No provision of the CAIR NO_X Annual Trading Program, the CAIR permit application, the CAIR permit, or an exemption under § 97.105 and no provision of law shall be construed to limit the authority of the United States to terminate or limit such authorization.

(6) A CAIR NO_X allowance does not constitute a property right.

(7) Upon recordation by the Administrator under subpart EE, FF, GG, or II of this part, every allocation, transfer, or deduction of a CAIR NO_X allowance to or from a CAIR NO_X source's compliance account is incorporated automatically in any CAIR permit of the source.

(d) *Excess emissions requirements.* If a CAIR NO_X source emits nitrogen oxides during any control period in excess of the CAIR NO_X emissions limitation, then:

(1) The owners and operators of the source and each CAIR NO_X unit at the source shall surrender the CAIR NO_X allowances required for deduction under § 97.154(d)(1) and pay any fine, penalty, or assessment or comply with any other remedy imposed, for the same violations, under the Clean Air Act or applicable State law; and

(2) Each ton of such excess emissions and each day of such control period shall constitute a separate violation of this subpart, the Clean Air Act, and applicable State law.

(e) *Recordkeeping and reporting requirements.* (1) Unless otherwise provided, the owners and operators of the CAIR NO_X source and each CAIR NO_X unit at the source shall keep on site at the source each of the following documents for a period of 5 years from the date the document is created. This period may be extended for cause, at any time before the end of 5 years, in writing by the permitting authority or the Administrator.

(i) The certificate of representation under § 97.113 for the CAIR designated representative for the source and each CAIR NO_X unit at the source and all documents that demonstrate the truth of the statements in the certificate of representation; provided that the certificate and documents shall be retained on site at the source beyond such 5-year period until such documents are superseded because of the submission of a new certificate of representation under § 97.113 changing the CAIR designated representative.

(ii) All emissions monitoring information, in accordance with subpart HH of this part, provided that to the extent that subpart HH of this part provides for a 3-year period for recordkeeping, the 3-year period shall apply.

(iii) Copies of all reports, compliance certifications, and other submissions and all records made or required under the CAIR NO_X Annual Trading Program.

(iv) Copies of all documents used to complete a CAIR permit application and any other submission under the CAIR NO_X Annual Trading Program or to demonstrate compliance with the requirements of the CAIR NO_X Annual Trading Program.

(2) The CAIR designated representative of a CAIR NO_X source and each CAIR NO_X unit at the source shall submit the reports required under the CAIR NO_X Annual Trading Program, including those under subpart HH of this part.

(f) *Liability.* (1) Each CAIR NO_X source and each CAIR NO_X unit shall meet the requirements of the CAIR NO_X Annual Trading Program.

(2) Any provision of the CAIR NO_X Annual Trading Program that applies to a CAIR NO_X source or the CAIR designated representative of a CAIR NO_X source shall also apply to the owners

and operators of such source and of the CAIR NO_X units at the source.

(3) Any provision of the CAIR NO_X Annual Trading Program that applies to a CAIR NO_X unit or the CAIR designated representative of a CAIR NO_X unit shall also apply to the owners and operators of such unit.

(g) *Effect on other authorities.* No provision of the CAIR NO_X Annual Trading Program, a CAIR permit application, a CAIR permit, or an exemption under § 97.105 shall be construed as exempting or excluding the owners and operators, and the CAIR designated representative, of a CAIR NO_X source or CAIR NO_X unit from compliance with any other provision of the applicable, approved State implementation plan, a federally enforceable permit, or the Clean Air Act.

§ 97.107 Computation of time.

(a) Unless otherwise stated, any time period scheduled, under the CAIR NO_X Annual Trading Program, to begin on the occurrence of an act or event shall begin on the day the act or event occurs.

(b) Unless otherwise stated, any time period scheduled, under the CAIR NO_X Annual Trading Program, to begin before the occurrence of an act or event shall be computed so that the period ends the day before the act or event occurs.

(c) Unless otherwise stated, if the final day of any time period, under the CAIR NO_X Annual Trading Program, falls on a weekend or a State or Federal holiday, the time period shall be extended to the next business day.

§ 97.108 Appeal procedures.

The appeal procedures for decisions of the Administrator under the CAIR NO_X Annual Trading Program are set forth in part 78 of this chapter.

Subpart BB—CAIR Designated Representative for CAIR NO_X Sources

§ 97.110 Authorization and responsibilities of CAIR designated representative.

(a) Except as provided under § 97.111, each CAIR NO_X source, including all CAIR NO_X units at the source, shall have one and only one CAIR designated representative, with regard to all matters under the CAIR NO_X Annual Trading Program concerning the source or any CAIR NO_X unit at the source.

(b) The CAIR designated representative of the CAIR NO_X source shall be selected by an agreement binding on the owners and operators of the source and all CAIR NO_X units at the source and shall act in accordance with the certification statement in § 97.113(a)(4)(iv).

(c) Upon receipt by the Administrator of a complete certificate of representation under § 97.113, the CAIR designated representative of the source shall represent and, by his or her representations, actions, inactions, or submissions, legally bind each owner and operator of the CAIR NO_X source represented and each CAIR NO_X unit at the source in all matters pertaining to the CAIR NO_X Annual Trading Program, notwithstanding any agreement between the CAIR designated representative and such owners and operators. The owners and operators shall be bound by any decision or order issued to the CAIR designated representative by the permitting authority, the Administrator, or a court regarding the source or unit.

(d) No CAIR permit will be issued, no emissions data reports will be accepted, and no CAIR NO_X Allowance Tracking System account will be established for a CAIR NO_X unit at a source, until the Administrator has received a complete certificate of representation under § 97.113 for a CAIR designated representative of the source and the CAIR NO_X units at the source.

(e)(1) Each submission under the CAIR NO_X Annual Trading Program shall be submitted, signed, and certified by the CAIR designated representative for each CAIR NO_X source on behalf of which the submission is made. Each such submission shall include the following certification statement by the CAIR designated representative: ''I am authorized to make this submission on behalf of the owners and operators of the source or units for which the submission is made. I certify under penalty of law that I have personally examined, and am familiar with, the statements and information

submitted in this document and all its attachments. Based on my inquiry of those individuals with primary responsibility for obtaining the information, I certify that the statements and information are to the best of my knowledge and belief true, accurate, and complete. I am aware that there are significant penalties for submitting false statements and information or omitting required statements and information, including the possibility of fine or imprisonment.''

(2) The permitting authority and the Administrator will accept or act on a submission made on behalf of owner or operators of a CAIR NO_X source or a CAIR NO_X unit only if the submission has been made, signed, and certified in accordance with paragraph (e)(1) of this section.

§ 97.111 Alternate CAIR designated representative.

(a) A certificate of representation under § 97.113 may designate one and only one alternate CAIR designated representative, who may act on behalf of the CAIR designated representative. The agreement by which the alternate CAIR designated representative is selected shall include a procedure for authorizing the alternate CAIR designated representative to act in lieu of the CAIR designated representative.

(b) Upon receipt by the Administrator of a complete certificate of representation under § 97.113, any representation, action, inaction, or submission by the alternate CAIR designated representative shall be deemed to be a representation, action, inaction, or submission by the CAIR designated representative.

(c) Except in this section and §§ 97.102, 97.110(a) and (d), 97.112, 97.113, 97.115, 97.151 and 97.182, whenever the term ''CAIR designated representative'' is used in subparts AA through II of this part, the term shall be construed to include the CAIR designated representative or any alternate CAIR designated representative.

§ 97.112 Changing CAIR designated representative and alternate CAIR designated representative; changes in owners and operators.

(a) *Changing CAIR designated representative.* The CAIR designated representative may be changed at any time upon receipt by the Administrator of a superseding complete certificate of representation under § 97.113. Notwithstanding any such change, all representations, actions, inactions, and submissions by the previous CAIR designated representative before the time and date when the Administrator receives the superseding certificate of representation shall be binding on the new CAIR designated representative and the owners and operators of the CAIR NO_X source and the CAIR NO_X units at the source.

(b) *Changing alternate CAIR designated representative.* The alternate CAIR designated representative may be changed at any time upon receipt by the Administrator of a superseding complete certificate of representation under § 97.113. Notwithstanding any such change, all representations, actions, inactions, and submissions by the previous alternate CAIR designated representative before the time and date when the Administrator receives the superseding certificate of representation shall be binding on the new alternate CAIR designated representative and the owners and operators of the CAIR NO_X source and the CAIR NO_X units at the source.

(c) *Changes in owners and operators.* (1) In the event an owner or operator of a CAIR NO_X source or a CAIR NO_X unit is not included in the list of owners and operators in the certificate of representation under § 97.113, such owner or operator shall be deemed to be subject to and bound by the certificate of representation, the representations, actions, inactions, and submissions of the CAIR designated representative and any alternate CAIR designated representative of the source or unit, and the decisions and orders of the permitting authority, the Administrator, or a court, as if the owner or operator were included in such list.

(2) Within 30 days following any change in the owners and operators of a CAIR NO_X source or a CAIR NO_X unit,

including the addition of a new owner or operator, the CAIR designated representative or any alternate CAIR designated representative shall submit a revision to the certificate of representation under § 97.113 amending the list of owners and operators to include the change.

§ 97.113 Certificate of representation.

(a) A complete certificate of representation for a CAIR designated representative or an alternate CAIR designated representative shall include the following elements in a format prescribed by the Administrator:

(1) Identification of the CAIR NO_X source, and each CAIR NO_X unit at the source, for which the certificate of representation is submitted, including identification and nameplate capacity of each generator served by each such unit.

(2) The name, address, e-mail address (if any), telephone number, and facsimile transmission number (if any) of the CAIR designated representative and any alternate CAIR designated representative.

(3) A list of the owners and operators of the CAIR NO_X source and of each CAIR NO_X unit at the source.

(4) The following certification statements by the CAIR designated representative and any alternate CAIR designated representative—

(i) ''I certify that I was selected as the CAIR designated representative or alternate CAIR designated representative, as applicable, by an agreement binding on the owners and operators of the source and each CAIR NO_X unit at the source.''

(ii) ''I certify that I have all the necessary authority to carry out my duties and responsibilities under the CAIR NO_X Annual Trading Program on behalf of the owners and operators of the source and of each CAIR NO_X unit at the source and that each such owner and operator shall be fully bound by my representations, actions, inactions, or submissions.''

(iii) ''I certify that the owners and operators of the source and of each CAIR NO_X unit at the source shall be bound by any order issued to me by the Administrator, the permitting authority, or a court regarding the source or unit.''

(iv) Where there are multiple holders of a legal or equitable title to, or a leasehold interest in, a CAIR NO_X unit, or where a utility or industrial customer purchases power from a CAIR NO_X unit under a life-of-the-unit, firm power contractual arrangement, I certify that: I have given a written notice of my selection as the 'CAIR designated representative' or 'alternate CAIR designated representative', as applicable, and of the agreement by which I was selected to each owner and operator of the source and of each CAIR NO_X unit at the source; and CAIR NO_X allowances and proceeds of transactions involving CAIR NO_X allowances will be deemed to be held or distributed in proportion to each holder's legal, equitable, leasehold, or contractual reservation or entitlement, except that, if such multiple holders have expressly provided for a different distribution of CAIR NO_X allowances by contract, CAIR NO_X allowances and proceeds of transactions involving CAIR NO_X allowances will be deemed to be held or distributed in accordance with the contract.''

(5) The signature of the CAIR designated representative and any alternate CAIR designated representative and the dates signed.

(b) Unless otherwise required by the permitting authority or the Administrator, documents of agreement referred to in the certificate of representation shall not be submitted to the permitting authority or the Administrator. Neither the permitting authority nor the Administrator shall be under any obligation to review or evaluate the sufficiency of such documents, if submitted.

[65 FR 2727, Jan. 18, 2000, as amended at 71 FR 74795, Dec. 13, 2006]

§ 97.114 Objections concerning CAIR designated representative.

(a) Once a complete certificate of representation under § 97.113 has been submitted and received, the permitting authority and the Administrator will rely on the certificate of representation unless and until a superseding complete certificate of representation

under §97.113 is received by the Administrator.

(b) Except as provided in §97.112(a) or (b), no objection or other communication submitted to the permitting authority or the Administrator concerning the authorization, or any representation, action, inaction, or submission, of the CAIR designated representative shall affect any representation, action, inaction, or submission of the CAIR designated representative or the finality of any decision or order by the permitting authority or the Administrator under the CAIR NO_X Annual Trading Program.

(c) Neither the permitting authority nor the Administrator will adjudicate any private legal dispute concerning the authorization or any representation, action, inaction, or submission of any CAIR designated representative, including private legal disputes concerning the proceeds of CAIR NO_X allowance transfers.

§97.115 Delegation by CAIR designated representative and alternate CAIR designated representative.

(a) A CAIR designated representative may delegate, to one or more natural persons, his or her authority to make an electronic submission to the Administrator provided for or required under this part.

(b) An alternate CAIR designated representative may delegate, to one or more natural persons, his or her authority to make an electronic submission to the Administrator provided for or required under this part.

(c) In order to delegate authority to make an electronic submission to the Administrator in accordance with paragraph (a) or (b) of this section, the CAIR designated representative or alternate CAIR designated representative, as appropriate, must submit to the Administrator a notice of delegation, in a format prescribed by the Administrator, that includes the following elements:

(1) The name, address, e-mail address, telephone number, and facsimile transmission number (if any) of such CAIR designated representative or alternate CAIR designated representative;

(2) The name, address, e-mail address, telephone number, and facsimile transmission number (if any) of each such natural person (referred to as an ''agent'');

(3) For each such natural person, a list of the type or types of electronic submissions under paragraph (a) or (b) of this section for which authority is delegated to him or her; and

(4) The following certification statements by such CAIR designated representative or alternate CAIR designated representative:

(i) ''I agree that any electronic submission to the Administrator that is by an agent identified in this notice of delegation and of a type listed for such agent in this notice of delegation and that is made when I am a CAIR designated representative or alternate CAIR designated representative, as appropriate, and before this notice of delegation is superseded by another notice of delegation under 40 CFR 97.115(d) shall be deemed to be an electronic submission by me.''

(ii) ''Until this notice of delegation is superseded by another notice of delegation under 40 CFR 97.115(d), I agree to maintain an e-mail account and to notify the Administrator immediately of any change in my e-mail address unless all delegation of authority by me under 40 CFR 97.115 is terminated.''.

(d) A notice of delegation submitted under paragraph (c) of this section shall be effective, with regard to the CAIR designated representative or alternate CAIR designated representative identified in such notice, upon receipt of such notice by the Administrator and until receipt by the Administrator of a superseding notice of delegation submitted by such CAIR designated representative or alternate CAIR designated representative, as appropriate. The superseding notice of delegation may replace any previously identified agent, add a new agent, or eliminate entirely any delegation of authority.

(e) Any electronic submission covered by the certification in paragraph

(c)(4)(i) of this section and made in accordance with a notice of delegation effective under paragraph (d) of this section shall be deemed to be an electronic submission by the CAIR designated representative or alternate CAIR designated representative submitting such notice of delegation.

Subpart CC—Permits

§ 97.120 General CAIR NO_X Annual Trading Program permit requirements.

(a) For each CAIR NO_X source required to have a title V operating permit or required, under subpart II of this part, to have a title V operating permit or other federally enforceable permit, such permit shall include a CAIR permit administered by the permitting authority for the title V operating permit or the federally enforceable permit as applicable. The CAIR portion of the title V permit or other federally enforceable permit as applicable shall be administered in accordance with the permitting authority's title V operating permits regulations promulgated under part 70 or 71 of this chapter or the permitting authority's regulations for other federally enforceable permits as applicable, except as provided otherwise by § 97.105, this subpart, and subpart II of this part.

(b) Each CAIR permit shall contain, with regard to the CAIR NO_X source and the CAIR NO_X units at the source covered by the CAIR permit, all applicable CAIR NO_X Annual Trading Program, CAIR NO_X Ozone Season Trading Program, and CAIR SO_2 Trading Program requirements and shall be a complete and separable portion of the title V operating permit or other federally enforceable permit under paragraph (a) of this section.

§ 97.121 Submission of CAIR permit applications.

(a) *Duty to apply*. The CAIR designated representative of any CAIR NO_X source required to have a title V operating permit shall submit to the permitting authority a complete CAIR permit application under § 97.122 for the source covering each CAIR NO_X unit at the source at least 18 months (or such lesser time provided by the permitting authority) before the later of January 1, 2009 or the date on which the CAIR NO_X unit commences commercial operation, except as provided in § 97.183(a).

(b) *Duty to reapply*. For a CAIR NO_X source required to have a title V operating permit, the CAIR designated representative shall submit a complete CAIR permit application under § 97.122 for the source covering each CAIR NO_X unit at the source to renew the CAIR permit in accordance with the permitting authority's title V operating permits regulations addressing permit renewal, except as provided in § 97.183(b).

§ 97.122 Information requirements for CAIR permit applications.

A complete CAIR permit application shall include the following elements concerning the CAIR NO_X source for which the application is submitted, in a format prescribed by the permitting authority:

(a) Identification of the CAIR NO_X source;

(b) Identification of each CAIR NO_X unit at the CAIR NO_X source; and

(c) The standard requirements under § 97.106.

§ 97.123 CAIR permit contents and term.

(a) Each CAIR permit will contain, in a format prescribed by the permitting authority, all elements required for a complete CAIR permit application under § 97.122.

(b) Each CAIR permit is deemed to incorporate automatically the definitions of terms under § 97.102 and, upon recordation by the Administrator under subpart EE, FF, GG, or II of this part, every allocation, transfer, or deduction of a CAIR NO_X allowance to or from the compliance account of the CAIR NO_X source covered by the permit.

(c) The term of the CAIR permit will be set by the permitting authority, as necessary to facilitate coordination of the renewal of the CAIR permit with issuance, revision, or renewal of the CAIR NO_X source's title V operating permit or other federally enforceable permit as applicable.

§ 97.124 CAIR permit revisions.

Except as provided in § 97.123(b), the permitting authority will revise the CAIR permit, as necessary, in accordance with the permitting authority's title V operating permits regulations or the permitting authority's regulations for other federally enforceable permits as applicable addressing permit revisions.

Subpart DD [Reserved]

Subpart EE—CAIR NO_X Allowance Allocations

§ 97.140 State trading budgets.

The State trading budgets for annual allocations of CAIR NO_X allowances for the control periods in 2009 through 2014 and in 2015 and thereafter are respectively as follows:

State	State trading budget for 2009–2014 (tons)	State trading budget for 2015 and thereafter (tons)
Alabama	69,020	57,517
Delaware	4,166	3,472
District of Columbia	144	120
Florida	99,445	82,871
Georgia	66,321	55,268
Illinois	76,230	63,525
Indiana	108,935	90,779
Iowa	32,692	27,243
Kentucky	83,205	69,337
Louisiana	35,512	29,593
Maryland	27,724	23,104
Michigan	65,304	54,420
Minnesota	31,443	26,203
Mississippi	17,807	14,839
Missouri	59,871	49,892
New Jersey	12,670	10,558
New York	45,617	38,014
North Carolina	62,183	51,819
Ohio	108,667	90,556
Pennsylvania	99,049	82,541
South Carolina	32,662	27,219
Tennessee	50,973	42,478
Texas	181,014	150,845
Virginia	36,074	30,062
West Virginia	74,220	61,850
Wisconsin	40,759	33,966
Total	1,521,707	1,268,091

§ 97.141 Timing requirements for CAIR NO_X allowance allocations.

(a) The Administrator will determine by order the CAIR NO_X allowance allocations, in accordance with § 97.142(a) and (b), for the control periods in 2009, 2010, 2011, 2012, 2013, and 2014.

(b) By July 31, 2011 and July 31 of each year thereafter, the Administrator will determine by order the CAIR NO_X allowance allocations, in accordance with § 97.142(a) and (b), for the control period in the fourth year after the year of the applicable deadline for determination under this paragraph.

(c) By July 31, 2009 and July 31 of each year thereafter, the Administrator will determine by order the CAIR NO_X allowance allocations, in accordance with § 97.142(a),(c), and (d), for the control period in the year of the applicable deadline for determination under this paragraph.

(d) The Administrator will make available to the public each determination of CAIR NO_X allowances under paragraph (a), (b), or (c) of this section and will provide an opportunity for submission of objections to the determination. Objections shall be limited to addressing whether the determination is in accordance with § 97.142. Based on any such objections, the Administrator will adjust each determination to the extent necessary to ensure that it is in accordance with § 97.142.

§ 97.142 CAIR NO_X allowance allocations.

(a)(1) The baseline heat input (in mmBtu) used with respect to CAIR NO_X allowance allocations under paragraph (b) of this section for each CAIR NO_X unit will be:

(i) For units commencing operation before January 1, 2001 the average of the 3 highest amounts of the unit's adjusted control period heat input for 2000 through 2004, with the adjusted control period heat input for each year calculated as follows:

(A) If the unit is coal-fired during the year, the unit's control period heat input for such year is multiplied by 100 percent;

(B) If the unit is oil-fired during the year, the unit's control period heat input for such year is multiplied by 60 percent; and

(C) If the unit is not subject to paragraph (a)(1)(i)(A) or (B) of this section, the unit's control period heat input for such year is multiplied by 40 percent.

(ii) For units commencing operation on or after January 1, 2001 and operating each calendar year during a period of 5 or more consecutive calendar years, the average of the 3 highest amounts of the unit's total converted control period heat input over the first such 5 years.

(2)(i) A unit's control period heat input, and a unit's status as coal-fired or oil-fired, for a calendar year under paragraph (a)(1)(i) of this section, and a unit's total tons of NO_X emissions during a calendar year under paragraph (c)(3) of this section, will be determined in accordance with part 75 of this chapter, to the extent the unit was otherwise subject to the requirements of part 75 of this chapter for the year, or will be based on the best available data reported to the Administrator for the unit (in a format prescribed by the Administrator), to the extent the unit was not otherwise subject to the requirements of part 75 of this chapter for the year.

(ii) A unit's converted control period heat input for a calendar year specified under paragraph (a)(1)(ii) of this section equals:

(A) Except as provided in paragraph (a)(2)(ii)(B) or (C) of this section, the control period gross electrical output of the generator or generators served by the unit multiplied by 7,900 Btu/kWh, if the unit is coal-fired for the year, or 6,675 Btu/kWh, if the unit is not coal-fired for the year, and divided by 1,000,000 Btu/mmBtu, provided that if a generator is served by 2 or more units, then the gross electrical output of the generator will be attributed to each unit in proportion to the unit's share of the total control period heat input of such units for the year;

(B) For a unit that is a boiler and has equipment used to produce electricity and useful thermal energy for industrial, commercial, heating, or cooling purposes through the sequential use of energy, the total heat energy (in Btu) of the steam produced by the boiler during the control period, divided by 0.8 and by 1,000,000 Btu/mmBtu; or

(C) For a unit that is a combustion turbine and has equipment used to produce electricity and useful thermal energy for industrial, commercial, heating, or cooling purposes through the sequential use of energy, the control period gross electrical output of the enclosed device comprising the compressor, combustor, and turbine multiplied by 3,413 Btu/kWh, plus the total heat energy (in Btu) of the steam produced by any associated heat recovery steam generator during the control period divided by 0.8, and with the sum divided by 1,000,000 Btu/mmBtu.

(iii) Gross electrical output and total heat energy under paragraph (a)(2)(ii) of this section will be determined based on the best available data reported to the Administrator for the unit (in a format prescribed by the Administrator).

(3) The Administrator will determine what data are the best available data under paragraph (a)(2) of this section by weighing the likelihood that data are accurate and reliable and giving greater weight to data submitted to a governmental entity in compliance with legal requirements or substantiated by an independent entity.

(b)(1) For each control period in 2009 and thereafter, the Administrator will allocate to all CAIR NO_X units in a State that have a baseline heat input (as determined under paragraph (a) of this section) a total amount of CAIR NO_X allowances equal to 95 percent for a control period during 2009 through 2014, and 97 percent for a control period during 2015 and thereafter, of the tons of NO_X emissions in the applicable State trading budget under § 97.140 (except as provided in paragraphs (d) and (e) of this section).

(2) The Administrator will allocate CAIR NO_X allowances to each CAIR NO_X unit under paragraph (b)(1) of this section in an amount determined by multiplying the total amount of CAIR NO_X allowances allocated under paragraph (b)(1) of this section by the ratio of the baseline heat input of such CAIR NO_X unit to the total amount of baseline heat input of all such CAIR NO_X units in the State and rounding to the nearest whole allowance as appropriate.

(c) For each control period in 2009 and thereafter, the Administrator will allocate CAIR NO_X allowances to CAIR NO_X units in a State that are not allocated CAIR NO_X allowances under paragraph (b) of this section because

the units do not yet have a baseline heat input under paragraph (a) of this section or because the units have a baseline heat input but all CAIR NO_X allowances available under paragraph (b) of this section for the control period are already allocated, in accordance with the following procedures:

(1) The Administrator will establish a separate new unit set-aside for each control period. Each new unit set-aside will be allocated CAIR NO_X allowances equal to 5 percent for a control period in 2009 through 2014, and 3 percent for a control period in 2015 and thereafter, of the amount of tons of NO_X emissions in the applicable State trading budget under § 97.140.

(2) The CAIR designated representative of such a CAIR NO_X unit may submit to the Administrator a request, in a format specified by the Administrator, to be allocated CAIR NO_X allowances, starting with the later of the control period in 2009 or the first control period after the control period in which the CAIR NO_X unit commences commercial operation and until the first control period for which the unit is allocated CAIR NO_X allowances under paragraph (b) of this section. A separate CAIR NO_X allowance allocation request for each control period for which CAIR NO_X allowances are sought must be submitted on or before May 1 of such control period and after the date on which the CAIR NO_X unit commences commercial operation.

(3) In a CAIR NO_X allowance allocation request under paragraph (c)(2) of this section, the CAIR designated representative may request for a control period CAIR NO_X allowances in an amount not exceeding the CAIR NO_X unit's total tons of NO_X emissions during the calendar year immediately before such control period.

(4) The Administrator will review each CAIR NO_X allowance allocation request under paragraph (c)(2) of this section and will allocate CAIR NO_X allowances for each control period pursuant to such request as follows:

(i) The Administrator will accept an allowance allocation request only if the request meets, or is adjusted by the Administrator as necessary to meet, the requirements of paragraphs (c)(2) and (3) of this section.

(ii) On or after May 1 of the control period, the Administrator will determine the sum of the CAIR NO_X allowances requested (as adjusted under paragraph (c)(4)(i) of this section) in all allowance allocation requests accepted under paragraph (c)(4)(i) of this section for the control period.

(iii) If the amount of CAIR NO_X allowances in the new unit set-aside for the control period is greater than or equal to the sum under paragraph (c)(4)(ii) of this section, then the Administrator will allocate the amount of CAIR NO_X allowances requested (as adjusted under paragraph (c)(4)(i) of this section) to each CAIR NO_X unit covered by an allowance allocation request accepted under paragraph (c)(4)(i) of this section.

(iv) If the amount of CAIR NO_X allowances in the new unit set-aside for the control period is less than the sum under paragraph (c)(4)(ii) of this section, then the Administrator will allocate to each CAIR NO_X unit covered by an allowance allocation request accepted under paragraph (c)(4)(i) of this section the amount of the CAIR NO_X allowances requested (as adjusted under paragraph (c)(4)(i) of this section), multiplied by the amount of CAIR NO_X allowances in the new unit set-aside for the control period, divided by the sum determined under paragraph (c)(4)(ii) of this section, and rounded to the nearest whole allowance as appropriate.

(v) The Administrator will notify each CAIR designated representative that submitted an allowance allocation request of the amount of CAIR NO_X allowances (if any) allocated for the control period to the CAIR NO_X unit covered by the request.

(d) If, after completion of the procedures under paragraph (c)(4) of this section for a control period, any unallocated CAIR NO_X allowances remain in the new unit set-aside under paragraph (c) of this section for a State for the control period, the Administrator will allocate to each CAIR NO_X unit that was allocated CAIR NO_X allowances under paragraph (b) of this section in the State an amount of CAIR NO_X allowances equal to the total amount of such remaining unallocated CAIR NO_X allowances, multiplied by the unit's allocation

under paragraph (b) of this section, divided by 95 percent for a control period during 2009 through 2014, and 97 percent for a control period during 2015 and thereafter, of the amount of tons of NO_X emissions in the applicable State trading budget under § 97.140, and rounded to the nearest whole allowance as appropriate.

(e) If the Administrator determines that CAIR NO_X allowances were allocated under paragraphs (a) and (b) of this section, paragraphs (a) and (c) of this section, or paragraph (d) of this section for a control period and that the recipient of the allocation is not actually a CAIR NO_X unit under § 97.104 in such control period, then the Administrator will notify the CAIR designated representative and will act in accordance with the following procedures:

(1) Except as provided in paragraph (e)(2) or (3) of this section, the Administrator will not record such CAIR NO_X allowances under § 97.153.

(2) If the Administrator already recorded such CAIR NO_X allowances under § 97.153 and if the Administrator makes such determination before making deductions for the source that includes such recipient under § 97.154(b) for the control period, then the Administrator will deduct from the account in which such CAIR NO_X allowances were recorded under § 97.153 an amount of CAIR NO_X allowances allocated for the same or a prior control period equal to the amount of such already recorded CAIR NO_X allowances. The CAIR designated representative shall ensure that there are sufficient CAIR NO_X allowances in such account for completion of the deduction.

(3) If the Administrator already recorded such CAIR NO_X allowances under § 97.153 and if the Administrator makes such determination after making deductions for the source that includes such recipient under § 97.154(b) for the control period, then the Administrator will apply paragraph (e)(1) or (2) of this section, as appropriate, to any subsequent control period for which CAIR NO_X allowances were allocated to such recipient.

(4) The Administrator will transfer the CAIR NO_X allowances that are not recorded, or that are deducted, in accordance with paragraphs (e)(1), (2), and (3) of this section to a new unit set-aside for the State in which such recipient is located.

§ 97.143 Compliance supplement pool.

(a) In addition to the CAIR NO_X allowances allocated under § 97.142, the Administrator may allocate for the control period in 2009 up to the following amount of CAIR NO_X allowances to CAIR NO_X units in the respective State:

State	Compliance supplement pool
Alabama	10,166
Delaware	843
District of Columbia	0
Florida	8,335
Georgia	12,397
Illinois	11,299
Indiana	20,155
Iowa	6,978
Kentucky	14,935
Louisiana	2,251
Maryland	4,670
Michigan	8,347
Minnesota	6,528
Mississippi	3,066
Missouri	9,044
New Jersey	660
New York	0
North Carolina	0
Ohio	25,037
Pennsylvania	16,009
South Carolina	2,600
Tennessee	8,944
Texas	772
Virginia	5,134
West Virginia	16,929
Wisconsin	4,898
Total	199,997

(b) For any CAIR NO_X unit in a State, if the unit's average annual NO_X emission rate for 2007 or 2008 is less than 0.25 lb/mmBtu and, where such unit is included in a NO_X averaging plan under § 76.11 of this chapter under the Acid Rain Program for such year, the unit's NO_X averaging plan has an actual weighted average NO_X emission rate for such year equal to or less than the actual weighted average NO_X emission rate for the year before such year and if the unit achieves NO_X emission reductions in 2007 and 2008, the CAIR designated representative of the unit may request early reduction credits, and allocation of CAIR NO_X allowances from the compliance supplement pool under paragraph (a) of this section for

such early reduction credits, in accordance with the following:

(1) The owners and operators of such CAIR NO_X unit shall monitor and report the NO_X emissions rate and the heat input of the unit in accordance with subpart HH of this part in each control period for which early reduction credit is requested.

(2) The CAIR designated representative of such CAIR NO_X unit shall submit to the Administrator by May 1, 2009 a request, in a format specified by the Administrator, for allocation of an amount of CAIR NO_X allowances from the compliance supplement pool not exceeding the sum of the unit's heat input for the control period in 2007 multiplied by the difference (if any greater than zero) between 0.25 lb/mmBtu and the unit's NO_X emission rate for the control period in 2007 plus the unit's heat input for the control period in 2008 multiplied by the difference (if any greater than zero) between 0.25 lb/mmBtu and the unit's NO_X emission rate for the control period in 2008, determined in accordance with subpart HH of this part and with the sum divided by 2,000 lb/ton and rounded to the nearest whole number of tons as appropriate.

(c) For any CAIR NO_X unit in a State whose compliance with the CAIR NO_X emissions limitation for the control period in 2009 would create an undue risk to the reliability of electricity supply during such control period, the CAIR designated representative of the unit may request the allocation of CAIR NO_X allowances from the compliance supplement pool under paragraph (a) of this section, in accordance with the following:

(1) The CAIR designated representative of such CAIR NO_X unit shall submit to the Administrator by May 1, 2009 a request, in a format specified by the Administrator, for allocation of an amount of CAIR NO_X allowances from the compliance supplement pool not exceeding the minimum amount of CAIR NO_X allowances necessary to remove such undue risk to the reliability of electricity supply.

(2) In the request under paragraph (c)(1) of this section, the CAIR designated representative of such CAIR NO_X unit shall demonstrate that, in the absence of allocation to the unit of the amount of CAIR NO_X allowances requested, the unit's compliance with the CAIR NO_X emissions limitation for the control period in 2009 would create an undue risk to the reliability of electricity supply during such control period. This demonstration must include a showing that it would not be feasible for the owners and operators of the unit to:

(i) Obtain a sufficient amount of electricity from other electricity generation facilities, during the installation of control technology at the unit for compliance with the CAIR NO_X emissions limitation, to prevent such undue risk; or

(ii) Obtain under paragraphs (b) and (d) of this section, or otherwise obtain, a sufficient amount of CAIR NO_X allowances to prevent such undue risk.

(d) The Administrator will review each request under paragraph (b) or (c) of this section submitted by May 1, 2009 and will allocate CAIR NO_X allowances for the control period in 2009 to CAIR NO_X units in a State and covered by such request as follows:

(1) Upon receipt of each such request, the Administrator will make any necessary adjustments to the request to ensure that the amount of the CAIR NO_X allowances requested meets the requirements of paragraph (b) or (c) of this section.

(2) If the State's compliance supplement pool under paragraph (a) of this section has an amount of CAIR NO_X allowances not less than the total amount of CAIR NO_X allowances in all such requests (as adjusted under paragraph (d)(1) of this section), the Administrator will allocate to each CAIR NO_X unit covered by such requests the amount of CAIR NO_X allowances requested (as adjusted under paragraph (d)(1) of this section).

(3) If the State's compliance supplement pool under paragraph (a) of this section has a smaller amount of CAIR NO_X allowances than the total amount of CAIR NO_X allowances in all such requests (as adjusted under paragraph (d)(1) of this section), the Administrator will allocate CAIR NO_X allowances to each CAIR NO_X unit covered by such requests according to the following formula and rounding to the

nearest whole allowance as appropriate:

Unit's allocation = Unit's adjusted allocation × (State's compliance supplement pool ÷ Total adjusted allocations for all units)

Where:

''Unit's allocation'' is the amount of CAIR NO_X allowances allocated to the unit from the State's compliance supplement pool.

''Unit's adjusted allocation'' is the amount of CAIR NO_X allowances requested for the unit under paragraph (b) or (c) of this section, as adjusted under paragraph (d)(1) of this section.

''State's compliance supplement pool'' is the amount of CAIR NO_X allowances in the State's compliance supplement pool.

''Total adjusted allocations for all units'' is the sum of the amounts of allocations requested for all units under paragraph (b) or (c) of this section, as adjusted under paragraph (d)(1) of this section.

(4) By July 31, 2009, the Administrator will determine by order the allocations under paragraph (d)(2) or (3) of this section. The Administrator will make available to the public each determination of CAIR NO_X allowances under such paragraph and will provide an opportunity for submission of objections to the determination. Objections shall be limited to addressing whether the determination is in accordance with paragraph (b) or (c) of this section and paragraph (d)(2) or (3) of this section, as appropriate. Based on any such objections, the Administrator will adjust each determination to the extent necessary to ensure that it is in accordance with such paragraphs.

(5) By January 1, 2010, the Administrator will record the allocations under paragraph (d)(4) of this section.

[65 FR 2727, Jan. 18, 2000, as amended at 71 FR 74795, Dec. 13, 2006]

§ 97.144 Alternative of allocation of CAIR NO_X allowances and compliance supplement pool by permitting authority.

(a) Notwithstanding §§ 97.141, 97.142, and 97.153 if a State submits, and the Administrator approves, a State implementation plan revision in accordance with § 51.123(p)(1) of this chapter providing for allocation of CAIR NO_X allowances by the permitting authority, then the permitting authority shall make such allocations in accordance with such approved State implementation plan revision, the Administrator will not make allocations under §§ 97.141 and 97.142 for the CAIR NO_X units in the State, and under § 97.153, the Administrator will record the allocations made under such approved State implementation plan revision instead of allocations made under §§ 97.141 and 97.142.

(b) Notwithstanding § 97.143, if a State submits, and the Administrator approves, a State implementation plan revision in accordance with § 51.123(p)(2) of this chapter providing for allocation of the State's compliance supplement pool by the permitting authority, then the permitting authority shall make such allocations in accordance with such approved State implementation plan revision, the Administrator will not make allocations under § 97.143(d)(4) for the CAIR NO_X units in the State, and under § 97.143(d)(5), the Administrator will record the allocations of the State's compliance supplement pool made under such approved State implementation plan revision instead of allocations made under § 97.143(d)(4).

(c)(1) In implementing paragraph (a) of this section and §§ 97.141, 97.142, and 97.153, the Administrator will ensure that the total amount of CAIR NO_X allowances allocated, under such provisions and under a State's State implementation plan revision approved in accordance with § 51.123(p)(1) of this chapter, for a control period for CAIR NO_X sources in the State or for other entities specified by the permitting authority will not exceed the State's State trading budget for the year of the control period.

(2) In implementing paragraph (b) of this section and § 97.143, the Administrator will ensure that the total amount of CAIR NO_X allowances allocated, under such provisions and under a State's State implementation plan revision approved in accordance with § 51.123(p)(2), for CAIR NO_X sources in the State will not exceed the State's compliance supplement pool.

[65 FR 2727, Jan. 18, 2000, as amended at 71 FR 74795, Dec. 13, 2006]

APPENDIX A TO SUBPART EE OF PART 97—STATES WITH APPROVED STATE IMPLEMENTATION PLAN REVISIONS CONCERNING ALLOCATIONS

1. The following States have State Implementation Plan revisions under §51.123(p)(1) of this chapter approved by the Administrator and providing for allocation of CAIR NO_X allowances by the permitting authority under §97.144(a):

Indiana
Louisiana
Michigan
New Jersey
North Carolina
Ohio
South Carolina
Tennessee
Texas (for control periods 2009–2014)
West Virginia (for control periods 2009–2014)
Wisconsin

2. The following States have State Implementation Plan revisions under §51.123(p)(2) of this chapter approved by the Administrator and providing for allocation of the Compliance Supplement Pool by the permitting authority under §97.144(b):

Indiana
Michigan
New Jersey
Ohio
South Carolina
Texas

[65 FR 2727, Jan. 18, 2000, as amended at 72 FR 41459, July 30, 2007; 72 FR 46394, Aug. 20, 2007; 72 FR 52293, Sept. 13, 2007; 72 FR 55068, Sept. 28, 2007; 72 FR 55672, Oct. 1, 2007; 72 FR 56920, Oct. 5, 2007; 72 FR 57215, Oct. 9, 2007; 72 FR 58546, Oct. 16, 2007; 72 FR 59487, Oct. 22, 2007; 72 FR 71579, Dec. 18, 2007; 72 FR 72262, Dec. 20, 2007; 73 FR 6040, Feb. 1, 2008]

Subpart FF—CAIR NO_X Allowance Tracking System

§97.150 [Reserved]

§97.151 Establishment of accounts.

(a) *Compliance accounts.* Except as provided in §97.184(e), upon receipt of a complete certificate of representation under §97.113, the Administrator will establish a compliance account for the CAIR NO_X source for which the certificate of representation was submitted, unless the source already has a compliance account.

(b) *General accounts*—(1) *Application for general account.* (i) Any person may apply to open a general account for the purpose of holding and transferring CAIR NO_X allowances. An application for a general account may designate one and only one CAIR authorized account representative and one and only one alternate CAIR authorized account representative who may act on behalf of the CAIR authorized account representative. The agreement by which the alternate CAIR authorized account representative is selected shall include a procedure for authorizing the alternate CAIR authorized account representative to act in lieu of the CAIR authorized account representative.

(ii) A complete application for a general account shall be submitted to the Administrator and shall include the following elements in a format prescribed by the Administrator:

(A) Name, mailing address, e-mail address (if any), telephone number, and facsimile transmission number (if any) of the CAIR authorized account representative and any alternate CAIR authorized account representative;

(B) Organization name and type of organization, if applicable;

(C) A list of all persons subject to a binding agreement for the CAIR authorized account representative and any alternate CAIR authorized account representative to represent their ownership interest with respect to the CAIR NO_X allowances held in the general account;

(D) The following certification statement by the CAIR authorized account representative and any alternate CAIR authorized account representative: ''I certify that I was selected as the CAIR authorized account representative or the alternate CAIR authorized account representative, as applicable, by an agreement that is binding on all persons who have an ownership interest with respect to CAIR NO_X allowances held in the general account. I certify that I have all the necessary authority to carry out my duties and responsibilities under the CAIR NO_X Annual Trading Program on behalf of such persons and that each such person shall be fully bound by my representations, actions, inactions, or submissions and by any order or decision issued to me by the Administrator or a court regarding the general account.''

(E) The signature of the CAIR authorized account representative and

any alternate CAIR authorized account representative and the dates signed.

(iii) Unless otherwise required by the permitting authority or the Administrator, documents of agreement referred to in the application for a general account shall not be submitted to the permitting authority or the Administrator. Neither the permitting authority nor the Administrator shall be under any obligation to review or evaluate the sufficiency of such documents, if submitted.

(2) *Authorization of CAIR authorized account representative and alternate CAIR authorized account representative.* (i) Upon receipt by the Administrator of a complete application for a general account under paragraph (b)(1) of this section:

(A) The Administrator will establish a general account for the person or persons for whom the application is submitted.

(B) The CAIR authorized account representative and any alternate CAIR authorized account representative for the general account shall represent and, by his or her representations, actions, inactions, or submissions, legally bind each person who has an ownership interest with respect to CAIR NO_X allowances held in the general account in all matters pertaining to the CAIR NO_X Annual Trading Program, notwithstanding any agreement between the CAIR authorized account representative or any alternate CAIR authorized account representative and such person. Any such person shall be bound by any order or decision issued to the CAIR authorized account representative or any alternate CAIR authorized account representative by the Administrator or a court regarding the general account.

(C) Any representation, action, inaction, or submission by any alternate CAIR authorized account representative shall be deemed to be a representation, action, inaction, or submission by the CAIR authorized account representative.

(ii) Each submission concerning the general account shall be submitted, signed, and certified by the CAIR authorized account representative or any alternate CAIR authorized account representative for the persons having an ownership interest with respect to CAIR NO_X allowances held in the general account. Each such submission shall include the following certification statement by the CAIR authorized account representative or any alternate CAIR authorized account representative: ''I am authorized to make this submission on behalf of the persons having an ownership interest with respect to the CAIR NO_X allowances held in the general account. I certify under penalty of law that I have personally examined, and am familiar with, the statements and information submitted in this document and all its attachments. Based on my inquiry of those individuals with primary responsibility for obtaining the information, I certify that the statements and information are to the best of my knowledge and belief true, accurate, and complete. I am aware that there are significant penalties for submitting false statements and information or omitting required statements and information, including the possibility of fine or imprisonment.''

(iii) The Administrator will accept or act on a submission concerning the general account only if the submission has been made, signed, and certified in accordance with paragraph (b)(2)(ii) of this section.

(3) *Changing CAIR authorized account representative and alternate CAIR authorized account representative; changes in persons with ownership interest.* (i) The CAIR authorized account representative for a general account may be changed at any time upon receipt by the Administrator of a superseding complete application for a general account under paragraph (b)(1) of this section. Notwithstanding any such change, all representations, actions, inactions, and submissions by the previous CAIR authorized account representative before the time and date when the Administrator receives the superseding application for a general account shall be binding on the new CAIR authorized account representative and the persons with an ownership interest with respect to the CAIR NO_X allowances in the general account.

(ii) The alternate CAIR authorized account representative for a general account may be changed at any time

upon receipt by the Administrator of a superseding complete application for a general account under paragraph (b)(1) of this section. Notwithstanding any such change, all representations, actions, inactions, and submissions by the previous alternate CAIR authorized account representative before the time and date when the Administrator receives the superseding application for a general account shall be binding on the new alternate CAIR authorized account representative and the persons with an ownership interest with respect to the CAIR NO_X allowances in the general account.

(iii)(A) In the event a person having an ownership interest with respect to CAIR NO_X allowances in the general account is not included in the list of such persons in the application for a general account, such person shall be deemed to be subject to and bound by the application for a general account, the representation, actions, inactions, and submissions of the CAIR authorized account representative and any alternate CAIR authorized account representative of the account, and the decisions and orders of the Administrator or a court, as if the person were included in such list.

(B) Within 30 days following any change in the persons having an ownership interest with respect to CAIR NO_X allowances in the general account, including the addition of a new person, the CAIR authorized account representative or any alternate CAIR authorized account representative shall submit a revision to the application for a general account amending the list of persons having an ownership interest with respect to the CAIR NO_X allowances in the general account to include the change.

(4) *Objections concerning CAIR authorized account representative and alternate CAIR authorized account representative.* (i) Once a complete application for a general account under paragraph (b)(1) of this section has been submitted and received, the Administrator will rely on the application unless and until a superseding complete application for a general account under paragraph (b)(1) of this section is received by the Administrator.

(ii) Except as provided in paragraph (b)(3)(i) or (ii) of this section, no objection or other communication submitted to the Administrator concerning the authorization, or any representation, action, inaction, or submission of the CAIR authorized account representative or any alternate CAIR authorized account representative for a general account shall affect any representation, action, inaction, or submission of the CAIR authorized account representative or any alternate CAIR authorized account representative or the finality of any decision or order by the Administrator under the CAIR NO_X Annual Trading Program.

(iii) The Administrator will not adjudicate any private legal dispute concerning the authorization or any representation, action, inaction, or submission of the CAIR authorized account representative or any alternate CAIR authorized account representative for a general account, including private legal disputes concerning the proceeds of CAIR NO_X allowance transfers.

(5) *Delegation by CAIR authorized account representative and alternate CAIR authorized account representative.* (i) A CAIR authorized account representative may delegate, to one or more natural persons, his or her authority to make an electronic submission to the Administrator provided for or required under subparts FF and GG of this part.

(ii) An alternate CAIR authorized account representative may delegate, to one or more natural persons, his or her authority to make an electronic submission to the Administrator provided for or required under subparts FF and GG of this part.

(iii) In order to delegate authority to make an electronic submission to the Administrator in accordance with paragraph (b)(5)(i) or (ii) of this section, the CAIR authorized account representative or alternate CAIR authorized account representative, as appropriate, must submit to the Administrator a notice of delegation, in a format prescribed by the Administrator, that includes the following elements:

(A) The name, address, e-mail address, telephone number, and facsimile transmission number (if any) of such

CAIR authorized account representative or alternate CAIR authorized account representative;

(B) The name, address, e-mail address, telephone number, and facsimile transmission number (if any) of each such natural person (referred to as an ''agent'');

(C) For each such natural person, a list of the type or types of electronic submissions under paragraph (b)(5)(i) or (ii) of this section for which authority is delegated to him or her;

(D) The following certification statement by such CAIR authorized account representative or alternate CAIR authorized account representative: ''I agree that any electronic submission to the Administrator that is by an agent identified in this notice of delegation and of a type listed for such agent in this notice of delegation and that is made when I am a CAIR authorized account representative or alternate CAIR authorized representative, as appropriate, and before this notice of delegation is superseded by another notice of delegation under 40 CFR 97.151(b)(5)(iv) shall be deemed to be an electronic submission by me.''; and

(E) The following certification statement by such CAIR authorized account representative or alternate CAIR authorized account representative: ''Until this notice of delegation is superseded by another notice of delegation under 40 CFR 97.151(b)(5)(iv), I agree to maintain an e-mail account and to notify the Administrator immediately of any change in my e-mail address unless all delegation of authority by me under 40 CFR 97.151(b)(5) is terminated.''.

(iv) A notice of delegation submitted under paragraph (b)(5)(iii) of this section shall be effective, with regard to the CAIR authorized account representative or alternate CAIR authorized account representative identified in such notice, upon receipt of such notice by the Administrator and until receipt by the Administrator of a superseding notice of delegation submitted by such CAIR authorized account representative or alternate CAIR authorized account representative, as appropriate. The superseding notice of delegation may replace any previously identified agent, add a new agent, or eliminate entirely any delegation of authority.

(v) Any electronic submission covered by the certification in paragraph (b)(5)(iii)(D) of this section and made in accordance with a notice of delegation effective under paragraph (b)(5)(iv) of this section shall be deemed to be an electronic submission by the CAIR designated representative or alternate CAIR designated representative submitting such notice of delegation.

(c) *Account identification.* The Administrator will assign a unique identifying number to each account established under paragraph (a) or (b) of this section.

§ 97.152 Responsibilities of CAIR authorized account representative.

Following the establishment of a CAIR NO_X Allowance Tracking System account, all submissions to the Administrator pertaining to the account, including, but not limited to, submissions concerning the deduction or transfer of CAIR NO_X allowances in the account, shall be made only by the CAIR authorized account representative for the account.

§ 97.153 Recordation of CAIR NO_X allowance allocations.

(a) By September 30, 2007, the Administrator will record in the CAIR NO_X source's compliance account the CAIR NO_X allowances allocated for the CAIR NO_X units at the source in accordance with § 97.142(a) and (b) for the control period in 2009.

(b) By September 30, 2008, the Administrator will record in the CAIR NO_X source's compliance account the CAIR NO_X allowances allocated for the CAIR NO_X units at the source in accordance with § 97.142(a) and (b) for the control period in 2010.

(c) By September 30, 2009, the Administrator will record in the CAIR NO_X source's compliance account the CAIR NO_X allowances allocated for the CAIR NO_X units at the source in accordance with § 97.142(a) and (b) for the control periods in 2011, 2012, and 2013.

(d) By December 1, 2010 and December 1 of each year thereafter, the Administrator will record in the CAIR NO_X source's compliance account the CAIR NO_X allowances allocated for the CAIR

NO_X units at the source in accordance with § 97.142(a) and (b) for the control period in the fourth year after the year of the applicable deadline for recordation under this paragraph.

(e) By December 1, 2009 and December 1 of each year thereafter, the Administrator will record in the CAIR NO_X source's compliance account the CAIR NO_X allowances allocated for the CAIR NO_X units at the source in accordance with § 97.142(a) and (c) for the control period in the year of the applicable deadline for recordation under this paragraph.

(f) *Serial numbers for allocated CAIR NO_X allowances*. When recording the allocation of CAIR NO_X allowances for a CAIR NO_X unit in a compliance account, the Administrator will assign each CAIR NO_X allowance a unique identification number that will include digits identifying the year of the control period for which the CAIR NO_X allowance is allocated.

§ 97.154 Compliance with CAIR NO_X emissions limitation.

(a) *Allowance transfer deadline*. The CAIR NO_X allowances are available to be deducted for compliance with a source's CAIR NO_X emissions limitation for a control period in a given calendar year only if the CAIR NO_X allowances:

(1) Were allocated for the control period in the year or a prior year; and

(2) Are held in the compliance account as of the allowance transfer deadline for the control period or are transferred into the compliance account by a CAIR NO_X allowance transfer correctly submitted for recordation under §§ 97.160 and 97.161 by the allowance transfer deadline for the control period.

(b) *Deductions for compliance*. Following the recordation, in accordance with § 97.161, of CAIR NO_X allowance transfers submitted for recordation in a source's compliance account by the allowance transfer deadline for a control period, the Administrator will deduct from the compliance account CAIR NO_X allowances available under paragraph (a) of this section in order to determine whether the source meets the CAIR NO_X emissions limitation for the control period, as follows:

(1) Until the amount of CAIR NO_X allowances deducted equals the number of tons of total nitrogen oxides emissions, determined in accordance with subpart HH of this part, from all CAIR NO_X units at the source for the control period; or

(2) If there are insufficient CAIR NO_X allowances to complete the deductions in paragraph (b)(1) of this section, until no more CAIR NO_X allowances available under paragraph (a) of this section remain in the compliance account.

(c)(1) *Identification of CAIR NO_X allowances by serial number*. The CAIR authorized account representative for a source's compliance account may request that specific CAIR NO_X allowances, identified by serial number, in the compliance account be deducted for emissions or excess emissions for a control period in accordance with paragraph (b) or (d) of this section. Such request shall be submitted to the Administrator by the allowance transfer deadline for the control period and include, in a format prescribed by the Administrator, the identification of the CAIR NO_X source and the appropriate serial numbers.

(2) *First-in, first-out*. The Administrator will deduct CAIR NO_X allowances under paragraph (b) or (d) of this section from the source's compliance account, in the absence of an identification or in the case of a partial identification of CAIR NO_X allowances by serial number under paragraph (c)(1) of this section, on a first-in, first-out (FIFO) accounting basis in the following order:

(i) Any CAIR NO_X allowances that were allocated to the units at the source, in the order of recordation; and then

(ii) Any CAIR NO_X allowances that were allocated to any entity and transferred and recorded in the compliance account pursuant to subpart GG of this part, in the order of recordation.

(d) *Deductions for excess emissions*. (1) After making the deductions for compliance under paragraph (b) of this section for a control period in a calendar year in which the CAIR NO_X source has excess emissions, the Administrator will deduct from the source's compliance account an amount of CAIR NO_X allowances, allocated for the control

period in the immediately following calendar year, equal to 3 times the number of tons of the source's excess emissions.

(2) Any allowance deduction required under paragraph (d)(1) of this section shall not affect the liability of the owners and operators of the CAIR NO_X source or the CAIR NO_X units at the source for any fine, penalty, or assessment, or their obligation to comply with any other remedy, for the same violations, as ordered under the Clean Air Act or applicable State law.

(e) *Recordation of deductions.* The Administrator will record in the appropriate compliance account all deductions from such an account under paragraphs (b) and (d) of this section and subpart II.

(f) *Administrator's action on submissions.* (1) The Administrator may review and conduct independent audits concerning any submission under the CAIR NO_X Annual Trading Program and make appropriate adjustments of the information in the submissions.

(2) The Administrator may deduct CAIR NO_X allowances from or transfer CAIR NO_X allowances to a source's compliance account based on the information in the submissions, as adjusted under paragraph (f)(1) of this section, and record such deductions and transfers.

§ 97.155 Banking.

(a) CAIR NO_X allowances may be banked for future use or transfer in a compliance account or a general account in accordance with paragraph (b) of this section.

(b) Any CAIR NO_X allowance that is held in a compliance account or a general account will remain in such account unless and until the CAIR NO_X allowance is deducted or transferred under § 97.142, § 97.154, § 97.156, or subpart GG or II of this part.

§ 97.156 Account error.

The Administrator may, at his or her sole discretion and on his or her own motion, correct any error in any CAIR NO_X Allowance Tracking System account. Within 10 business days of making such correction, the Administrator will notify the CAIR authorized account representative for the account.

§ 97.157 Closing of general accounts.

(a) The CAIR authorized account representative of a general account may submit to the Administrator a request to close the account, which shall include a correctly submitted allowance transfer under §§ 97.160 and 97.161 for any CAIR NO_X allowances in the account to one or more other CAIR NO_X Allowance Tracking System accounts.

(b) If a general account has no allowance transfers in or out of the account for a 12-month period or longer and does not contain any CAIR NO_X allowances, the Administrator may notify the CAIR authorized account representative for the account that the account will be closed following 20 business days after the notice is sent. The account will be closed after the 20-day period unless, before the end of the 20-day period, the Administrator receives a correctly submitted transfer of CAIR NO_X allowances into the account under §§ 97.160 and 97.161 or a statement submitted by the CAIR authorized account representative demonstrating to the satisfaction of the Administrator good cause as to why the account should not be closed.

Subpart GG—CAIR NO_X Allowance Transfers

§ 97.160 Submission of CAIR NO_X allowance transfers.

A CAIR authorized account representative seeking recordation of a CAIR NO_X allowance transfer shall submit the transfer to the Administrator. To be considered correctly submitted, the CAIR NO_X allowance transfer shall include the following elements, in a format specified by the Administrator:

(a) The account numbers for both the transferor and transferee accounts;

(b) The serial number of each CAIR NO_X allowance that is in the transferor account and is to be transferred; and

(c) The name and signature of the CAIR authorized account representative of the transferor account and the date signed.

§ 97.161 EPA recordation.

(a) Within 5 business days (except as provided in paragraph (b) of this section) of receiving a CAIR NO_X allowance transfer, the Administrator will record a CAIR NO_X allowance transfer by moving each CAIR NO_X allowance from the transferor account to the transferee account as specified by the request, provided that:

(1) The transfer is correctly submitted under § 97.160; and

(2) The transferor account includes each CAIR NO_X allowance identified by serial number in the transfer.

(b) A CAIR NO_X allowance transfer that is submitted for recordation after the allowance transfer deadline for a control period and that includes any CAIR NO_X allowances allocated for any control period before such allowance transfer deadline will not be recorded until after the Administrator completes the deductions under § 97.154 for the control period immediately before such allowance transfer deadline.

(c) Where a CAIR NO_X allowance transfer submitted for recordation fails to meet the requirements of paragraph (a) of this section, the Administrator will not record such transfer.

§ 97.162 Notification.

(a) *Notification of recordation.* Within 5 business days of recordation of a CAIR NO_X allowance transfer under § 97.161, the Administrator will notify the CAIR authorized account representatives of both the transferor and transferee accounts.

(b) *Notification of non-recordation.* Within 10 business days of receipt of a CAIR NO_X allowance transfer that fails to meet the requirements of § 97.161(a), the Administrator will notify the CAIR authorized account representatives of both accounts subject to the transfer of:

(1) A decision not to record the transfer, and

(2) The reasons for such non-recordation.

(c) Nothing in this section shall preclude the submission of a CAIR NO_X allowance transfer for recordation following notification of non-recordation.

Subpart HH—Monitoring and Reporting

§ 97.170 General requirements.

The owners and operators, and to the extent applicable, the CAIR designated representative, of a CAIR NO_X unit, shall comply with the monitoring, recordkeeping, and reporting requirements as provided in this subpart and in subpart H of part 75 of this chapter. For purposes of complying with such requirements, the definitions in § 97.102 and in § 72.2 of this chapter shall apply, and the terms ''affected unit,'' ''designated representative,'' and ''continuous emission monitoring system'' or ''CEMS'') in part 75 of this chapter shall be deemed to refer to the terms ''CAIR NO_X unit,'' ''CAIR designated representative,'' and ''continuous emission monitoring system'' (or ''CEMS'') respectively, as defined in § 97.102. The owner or operator of a unit that is not a CAIR NO_X unit but that is monitored under § 75.72(b)(2)(ii) of this chapter shall comply with the same monitoring, recordkeeping, and reporting requirements as a CAIR NO_X unit.

(a) *Requirements for installation, certification, and data accounting.* The owner or operator of each CAIR NO_X unit shall:

(1) Install all monitoring systems required under this subpart for monitoring NO_X mass emissions and individual unit heat input (including all systems required to monitor NO_X emission rate, NO_X concentration, stack gas moisture content, stack gas flow rate, CO_2 or O_2 concentration, and fuel flow rate, as applicable, in accordance with (§§ 75.71 and 75.72 of this chapter);

(2) Successfully complete all certification tests required under § 97.171 and meet all other requirements of this subpart and part 75 of this chapter applicable to the monitoring systems under paragraph (a)(1) of this section; and

(3) Record, report, and quality-assure the data from the monitoring systems under paragraph (a)(1) of this section.

(b) *Compliance deadlines.* Except as provided in paragraph (e) of this section, the owner or operator shall meet the monitoring system certification and other requirements of paragraphs

(a)(1) and (2) of this section on or before the following dates. The owner or operator shall record, report, and quality-assure the data from the monitoring systems under paragraph (a)(1) of this section on and after the following dates.

(1) For the owner or operator of a CAIR NO_X unit that commences commercial operation before July 1, 2007, by January 1, 2008.

(2) For the owner or operator of a CAIR NO_X unit that commences commercial operation on or after July 1, 2007, by the later of the following dates:

(i) January 1, 2008; or

(ii) 90 unit operating days or 180 calendar days, whichever occurs first, after the date on which the unit commences commercial operation.

(3) For the owner or operator of a CAIR NO_X unit for which construction of a new stack or flue or installation of add-on NO_X emission controls is completed after the applicable deadline under paragraph (b)(1), (2), (4), or (5) of this section, by 90 unit operating days or 180 calendar days, whichever occurs first, after the date on which emissions first exit to the atmosphere through the new stack or flue or add-on NO_X emissions controls.

(4) Notwithstanding the dates in paragraphs (b)(1) and (2) of this section, for the owner or operator of a unit for which a CAIR opt-in permit application is submitted and not withdrawn and a CAIR opt-in permit is not yet issued or denied under subpart II of this part, by the date specified in § 97.184(b).

(5) Notwithstanding the dates in paragraphs (b)(1) and (2) of this section, for the owner or operator of a CAIR NO_X opt-in unit under subpart II of this part, by the date on which the CAIR NO_X opt-in unit enters the CAIR NO_X Annual Trading Program as provided in § 97.184(g).

(c) *Reporting data.* The owner or operator of a CAIR NO_X unit that does not meet the applicable compliance date set forth in paragraph (b) of this section for any monitoring system under paragraph (a)(1) of this section shall, for each such monitoring system, determine, record, and report maximum potential (or, as appropriate, minimum potential) values for NO_X concentration, NO_X emission rate, stack gas flow rate, stack gas moisture content, fuel flow rate, and any other parameters required to determine NO_X mass emissions and heat input in accordance with § 75.31(b)(2) or (c)(3) of this chapter, section 2.4 of appendix D to part 75 of this chapter, or section 2.5 of appendix E to part 75 of this chapter, as applicable.

(d) *Prohibitions.* (1) No owner or operator of a CAIR NO_X unit shall use any alternative monitoring system, alternative reference method, or any other alternative to any requirement of this subpart without having obtained prior written approval in accordance with § 97.175.

(2) No owner or operator of a CAIR NO_X unit shall operate the unit so as to discharge, or allow to be discharged, NO_X emissions to the atmosphere without accounting for all such emissions in accordance with the applicable provisions of this subpart and part 75 of this chapter.

(3) No owner or operator of a CAIR NO_X unit shall disrupt the continuous emission monitoring system, any portion thereof, or any other approved emission monitoring method, and thereby avoid monitoring and recording NO_X mass emissions discharged into the atmosphere or heat input, except for periods of recertification or periods when calibration, quality assurance testing, or maintenance is performed in accordance with the applicable provisions of this subpart and part 75 of this chapter.

(4) No owner or operator of a CAIR NO_X unit shall retire or permanently discontinue use of the continuous emission monitoring system, any component thereof, or any other approved monitoring system under this subpart, except under any one of the following circumstances:

(i) During the period that the unit is covered by an exemption under § 97.105 that is in effect;

(ii) The owner or operator is monitoring emissions from the unit with another certified monitoring system approved, in accordance with the applicable provisions of this subpart and part

75 of this chapter, by the Administrator for use at that unit that provides emission data for the same pollutant or parameter as the retired or discontinued monitoring system; or

(iii) The CAIR designated representative submits notification of the date of certification testing of a replacement monitoring system for the retired or discontinued monitoring system in accordance with §97.171(d)(3)(i).

(e) *Long-term cold storage.* The owner or operator of a CAIR NO_X unit is subject to the applicable provisions of part 75 of this chapter concerning units in long-term cold storage.

§97.171 Initial certification and recertification procedures.

(a) The owner or operator of a CAIR NO_X unit shall be exempt from the initial certification requirements of this section for a monitoring system under §97.170(a)(1) if the following conditions are met:

(1) The monitoring system has been previously certified in accordance with part 75 of this chapter; and

(2) The applicable quality-assurance and quality-control requirements of §75.21 of this chapter and appendix B, appendix D, and appendix E to part 75 of this chapter are fully met for the certified monitoring system described in paragraph (a)(1) of this section.

(b) The recertification provisions of this section shall apply to a monitoring system under §97.170(a)(1) exempt from initial certification requirements under paragraph (a) of this section.

(c) If the Administrator has previously approved a petition under §75.17(a) or (b) of this chapter for apportioning the NO_X emission rate measured in a common stack or a petition under §75.66 of this chapter for an alternative to a requirement in §75.12 or §75.17 of this chapter, the CAIR designated representative shall resubmit the petition to the Administrator under §97.175 to determine whether the approval applies under the CAIR NO_X Annual Trading Program.

(d) Except as provided in paragraph (a) of this section, the owner or operator of a CAIR NO_X unit shall comply with the following initial certification and recertification procedures for a continuous monitoring system (*i.e.*, a continuous emission monitoring system and an excepted monitoring system under appendices D and E to part 75 of this chapter) under §97.170(a)(1). The owner or operator of a unit that qualifies to use the low mass emissions excepted monitoring methodology under §75.19 of this chapter or that qualifies to use an alternative monitoring system under subpart E of part 75 of this chapter shall comply with the procedures in paragraph (e) or (f) of this section respectively.

(1) *Requirements for initial certification.* The owner or operator shall ensure that each continuous monitoring system under §97.170(a)(1) (including the automated data acquisition and handling system) successfully completes all of the initial certification testing required under §75.20 of this chapter by the applicable deadline in §97.170(b). In addition, whenever the owner or operator installs a monitoring system to meet the requirements of this subpart in a location where no such monitoring system was previously installed, initial certification in accordance with §75.20 of this chapter is required.

(2) *Requirements for recertification.* Whenever the owner or operator makes a replacement, modification, or change in any certified continuous emission monitoring system under §97.170(a)(1) that may significantly affect the ability of the system to accurately measure or record NO_X mass emissions or heat input rate or to meet the quality-assurance and quality-control requirements of §75.21 of this chapter or appendix B to part 75 of this chapter, the owner or operator shall recertify the monitoring system in accordance with §75.20(b) of this chapter. Furthermore, whenever the owner or operator makes a replacement, modification, or change to the flue gas handling system or the unit's operation that may significantly change the stack flow or concentration profile, the owner or operator shall recertify each continuous emission monitoring system whose accuracy is potentially affected by the change, in accordance with §75.20(b) of this chapter. Examples of changes to a continuous

emission monitoring system that require recertification include replacement of the analyzer, complete replacement of an existing continuous emission monitoring system, or change in location or orientation of the sampling probe or site. Any fuel flowmeter system, and any excepted NO_X monitoring system under appendix E to part 75 of this chapter, under § 97.170(a)(1) are subject to the recertification requirements in § 75.20(g)(6) of this chapter.

(3) *Approval process for initial certification and recertification.* Paragraphs (d)(3)(i) through (iv) of this section apply to both initial certification and recertification of a continuous monitoring system under § 97.170(a)(1). For recertifications, replace the words ''certification'' and ''initial certification'' with the word ''recertification'', replace the word ''certified'' with the word ''recertified'', and follow the procedures in §§ 75.20(b)(5) and (g)(7) of this chapter in lieu of the procedures in paragraph (d)(3)(v) of this section.

(i) *Notification of certification.* The CAIR designated representative shall submit to the appropriate EPA Regional Office and the Administrator written notice of the dates of certification testing, in accordance with § 97.173.

(ii) *Certification application.* The CAIR designated representative shall submit to the Administrator a certification application for each monitoring system. A complete certification application shall include the information specified in § 75.63 of this chapter.

(iii) *Provisional certification date.* The provisional certification date for a monitoring system shall be determined in accordance with § 75.20(a)(3) of this chapter. A provisionally certified monitoring system may be used under the CAIR NO_X Annual Trading Program for a period not to exceed 120 days after receipt by the Administrator of the complete certification application for the monitoring system under paragraph (d)(3)(ii) of this section. Data measured and recorded by the provisionally certified monitoring system, in accordance with the requirements of part 75 of this chapter, will be considered valid quality-assured data (retroactive to the date and time of provisional certification), provided that the Administrator does not invalidate the provisional certification by issuing a notice of disapproval within 120 days of the date of receipt of the complete certification application by the Administrator.

(iv) *Certification application approval process.* The Administrator will issue a written notice of approval or disapproval of the certification application to the owner or operator within 120 days of receipt of the complete certification application under paragraph (d)(3)(ii) of this section. In the event the Administrator does not issue such a notice within such 120-day period, each monitoring system that meets the applicable performance requirements of part 75 of this chapter and is included in the certification application will be deemed certified for use under the CAIR NO_X Annual Trading Program.

(A) *Approval notice.* If the certification application is complete and shows that each monitoring system meets the applicable performance requirements of part 75 of this chapter, then the Administrator will issue a written notice of approval of the certification application within 120 days of receipt.

(B) *Incomplete application notice.* If the certification application is not complete, then the Administrator will issue a written notice of incompleteness that sets a reasonable date by which the CAIR designated representative must submit the additional information required to complete the certification application. If the CAIR designated representative does not comply with the notice of incompleteness by the specified date, then the Administrator may issue a notice of disapproval under paragraph (d)(3)(iv)(C) of this section. The 120-day review period shall not begin before receipt of a complete certification application.

(C) *Disapproval notice.* If the certification application shows that any monitoring system does not meet the performance requirements of part 75 of this chapter or if the certification application is incomplete and the requirement for disapproval under paragraph (d)(3)(iv)(B) of this section is met, then the Administrator will issue

a written notice of disapproval of the certification application. Upon issuance of such notice of disapproval, the provisional certification is invalidated by the Administrator and the data measured and recorded by each uncertified monitoring system shall not be considered valid quality-assured data beginning with the date and hour of provisional certification (as defined under § 75.20(a)(3) of this chapter). The owner or operator shall follow the procedures for loss of certification in paragraph (d)(3)(v) of this section for each monitoring system that is disapproved for initial certification.

(D) *Audit decertification.* The Administrator may issue a notice of disapproval of the certification status of a monitor in accordance with § 97.172(b).

(v) *Procedures for loss of certification.* If the Administrator issues a notice of disapproval of a certification application under paragraph (d)(3)(iv)(C) of this section or a notice of disapproval of certification status under paragraph (d)(3)(iv)(D) of this section, then:

(A) The owner or operator shall substitute the following values, for each disapproved monitoring system, for each hour of unit operation during the period of invalid data specified under § 75.20(a)(4)(iii), § 75.20(g)(7), or § 75.21(e) of this chapter and continuing until the applicable date and hour specified under § 75.20(a)(5)(i) or (g)(7) of this chapter:

(*1*) For a disapproved NO_X emission rate (*i.e.*,, NO_X-diluent) system, the maximum potential NO_X emission rate, as defined in § 72.2 of this chapter.

(*2*) For a disapproved NO_X pollutant concentration monitor and disapproved flow monitor, respectively, the maximum potential concentration of NO_X and the maximum potential flow rate, as defined in sections 2.1.2.1 and 2.1.4.1 of appendix A to part 75 of this chapter.

(*3*) For a disapproved moisture monitoring system and disapproved diluent gas monitoring system, respectively, the minimum potential moisture percentage and either the maximum potential CO_2 concentration or the minimum potential O_2 concentration (as applicable), as defined in sections 2.1.5, 2.1.3.1, and 2.1.3.2 of appendix A to part 75 of this chapter.

(*4*) For a disapproved fuel flowmeter system, the maximum potential fuel flow rate, as defined in section 2.4.2.1 of appendix D to part 75 of this chapter.

(*5*) For a disapproved excepted NO_X monitoring system under appendix E to part 75 of this chapter, the fuel-specific maximum potential NO_X emission rate, as defined in § 72.2 of this chapter.

(B) The CAIR designated representative shall submit a notification of certification retest dates and a new certification application in accordance with paragraphs (d)(3)(i) and (ii) of this section.

(C) The owner or operator shall repeat all certification tests or other requirements that were failed by the monitoring system, as indicated in the Administrator's notice of disapproval, no later than 30 unit operating days after the date of issuance of the notice of disapproval.

(e) *Initial certification and recertification procedures for units using the low mass emission excepted methodology under § 75.19 of this chapter.* The owner or operator of a unit qualified to use the low mass emissions (LME) excepted methodology under § 75.19 of this chapter shall meet the applicable certification and recertification requirements in §§ 75.19(a)(2) and 75.20(h) of this chapter. If the owner or operator of such a unit elects to certify a fuel flowmeter system for heat input determination, the owner or operator shall also meet the certification and recertification requirements in § 75.20(g) of this chapter.

(f) *Certification/recertification procedures for alternative monitoring systems.* The CAIR designated representative of each unit for which the owner or operator intends to use an alternative monitoring system approved by the Administrator under subpart E of part 75 of this chapter shall comply with the applicable notification and application procedures of § 75.20(f) of this chapter.

§ 97.172 Out of control periods.

(a) Whenever any monitoring system fails to meet the quality-assurance and quality-control requirements or data validation requirements of part 75 of this chapter, data shall be substituted using the applicable missing data procedures in subpart D or subpart H of, or

appendix D or appendix E to, part 75 of this chapter.

(b) *Audit decertification*. Whenever both an audit of a monitoring system and a review of the initial certification or recertification application reveal that any monitoring system should not have been certified or recertified because it did not meet a particular performance specification or other requirement under § 97.171 or the applicable provisions of part 75 of this chapter, both at the time of the initial certification or recertification application submission and at the time of the audit, the Administrator will issue a notice of disapproval of the certification status of such monitoring system. For the purposes of this paragraph, an audit shall be either a field audit or an audit of any information submitted to the permitting authority or the Administrator. By issuing the notice of disapproval, the Administrator revokes prospectively the certification status of the monitoring system. The data measured and recorded by the monitoring system shall not be considered valid quality-assured data from the date of issuance of the notification of the revoked certification status until the date and time that the owner or operator completes subsequently approved initial certification or recertification tests for the monitoring system. The owner or operator shall follow the applicable initial certification or recertification procedures in § 97.171 for each disapproved monitoring system.

§ 97.173 Notifications.

The CAIR designated representative for a CAIR NO_X unit shall submit written notice to the Administrator in accordance with § 75.61 of this chapter.

§ 97.174 Recordkeeping and reporting.

(a) *General provisions*. The CAIR designated representative shall comply with all recordkeeping and reporting requirements in this section, the applicable recordkeeping and reporting requirements under § 75.73 of this chapter, and the requirements of § 97.110(e)(1).

(b) *Monitoring plans*. The owner or operator of a CAIR NO_X unit shall comply with requirements of § 75.73(c) and (e) of this chapter and, for a unit for which a CAIR opt-in permit application is submitted and not withdrawn and a CAIR opt-in permit is not yet issued or denied under subpart II of this part, §§ 97.183 and 97.184(a).

(c) *Certification applications*. The CAIR designated representative shall submit an application to the Administrator within 45 days after completing all initial certification or recertification tests required under § 97.171, including the information required under § 75.63 of this chapter.

(d) *Quarterly reports*. The CAIR designated representative shall submit quarterly reports, as follows:

(1) The CAIR designated representative shall report the NO_X mass emissions data and heat input data for the CAIR NO_X unit, in an electronic quarterly report in a format prescribed by the Administrator, for each calendar quarter beginning with:

(i) For a unit that commences commercial operation before July 1, 2007, the calendar quarter covering January 1, 2008 through March 31, 2008;

(ii) For a unit that commences commercial operation on or after July 1, 2007, the calendar quarter corresponding to the earlier of the date of provisional certification or the applicable deadline for initial certification under § 97.170(b), unless that quarter is the third or fourth quarter of 2007, in which case reporting shall commence in the quarter covering January 1, 2008 through March 31, 2008;

(iii) Notwithstanding paragraphs (d)(1)(i) and (ii) of this section, for a unit for which a CAIR opt-in permit application is submitted and not withdrawn and a CAIR opt-in permit is not yet issued or denied under subpart II of this part, the calendar quarter corresponding to the date specified in § 97.184(b); and

(iv) Notwithstanding paragraphs (d)(1)(i) and (ii) of this section, for a CAIR NO_X opt-in unit under subpart II of this part, the calendar quarter corresponding to the date on which the CAIR NO_X opt-in unit enters the CAIR NO_X Annual Trading Program as provided in § 97.184(g).

(2) The CAIR designated representative shall submit each quarterly report to the Administrator within 30 days

following the end of the calendar quarter covered by the report. Quarterly reports shall be submitted in the manner specified in §75.73(f) of this chapter.

(3) For CAIR NO_X units that are also subject to an Acid Rain emissions limitation or the CAIR NO_X Ozone Season Trading Program, CAIR SO_2 Trading Program, or Hg Budget Trading Program, quarterly reports shall include the applicable data and information required by subparts F through I of part 75 of this chapter as applicable, in addition to the NO_X mass emission data, heat input data, and other information required by this subpart.

(e) *Compliance certification*. The CAIR designated representative shall submit to the Administrator a compliance certification (in a format prescribed by the Administrator) in support of each quarterly report based on reasonable inquiry of those persons with primary responsibility for ensuring that all of the unit's emissions are correctly and fully monitored. The certification shall state that:

(1) The monitoring data submitted were recorded in accordance with the applicable requirements of this subpart and part 75 of this chapter, including the quality assurance procedures and specifications; and

(2) For a unit with add-on NO_X emission controls and for all hours where NO_X data are substituted in accordance with §75.34(a)(1) of this chapter, the add-on emission controls were operating within the range of parameters listed in the quality assurance/quality control program under appendix B to part 75 of this chapter and the substitute data values do not systematically underestimate NO_X emissions.

§97.175 Petitions.

The CAIR designated representative of a CAIR NO_X unit may submit a petition under §75.66 of this chapter to the Administrator requesting approval to apply an alternative to any requirement of this subpart. Application of an alternative to any requirement of this subpart is in accordance with this subpart only to the extent that the petition is approved in writing by the Administrator, in consultation with the permitting authority.

Subpart II—CAIR NO_X Opt-In Units

§97.180 Applicability.

A CAIR NO_X opt-in unit must be a unit that:

(a) Is located in a State that submits, and for which the Administrator approves, a State implementation plan revision in accordance with §51.123(p)(3)(i), (ii), or (iii) of this chapter establishing procedures concerning CAIR opt-in units;

(b) Is not a CAIR NO_X unit under §97.104 and is not covered by a retired unit exemption under §97.105 that is in effect;

(c) Is not covered by a retired unit exemption under §72.8 of this chapter that is in effect;

(d) Has or is required or qualified to have a title V operating permit or other federally enforceable permit; and

(e) Vents all of its emissions to a stack and can meet the monitoring, recordkeeping, and reporting requirements of subpart HH of this part.

§97.181 General.

(a) Except as otherwise provided in §§97.101 through 97.104, §§97.106 through 97.108, and subparts BB and CC and subparts FF through HH of this part, a CAIR NO_X opt-in unit shall be treated as a CAIR NO_X unit for purposes of applying such sections and subparts of this part.

(b) Solely for purposes of applying, as provided in this subpart, the requirements of subpart HH of this part to a unit for which a CAIR opt-in permit application is submitted and not withdrawn and a CAIR opt-in permit is not yet issued or denied under this subpart, such unit shall be treated as a CAIR NO_X unit before issuance of a CAIR opt-in permit for such unit.

§97.182 CAIR designated representative.

Any CAIR NO_X opt-in unit, and any unit for which a CAIR opt-in permit application is submitted and not withdrawn and a CAIR opt-in permit is not yet issued or denied under this subpart, located at the same source as one or more CAIR NO_X units shall have the same CAIR designated representative and alternate CAIR designated representative as such CAIR NO_X units.

§ 97.183 Applying for CAIR opt-in permit.

(a) *Applying for initial CAIR opt-in permit.* The CAIR designated representative of a unit meeting the requirements for a CAIR NO_X opt-in unit in § 97.180 may apply for an initial CAIR opt-in permit at any time, except as provided under § 97.186(f) and (g), and, in order to apply, must submit the following:

(1) A complete CAIR permit application under § 97.122;

(2) A certification, in a format specified by the permitting authority, that the unit:

(i) Is not a CAIR NO_X unit under § 97.104 and is not covered by a retired unit exemption under § 97.105 that is in effect;

(ii) Is not covered by a retired unit exemption under § 72.8 of this chapter that is in effect;

(iii) Vents all of its emissions to a stack; and

(iv) Has documented heat input for more than 876 hours during the 6 months immediately preceding submission of the CAIR permit application under § 97.122;

(3) A monitoring plan in accordance with subpart HH of this part;

(4) A complete certificate of representation under § 97.113 consistent with § 97.182, if no CAIR designated representative has been previously designated for the source that includes the unit; and

(5) A statement, in a format specified by the permitting authority, whether the CAIR designated representative requests that the unit be allocated CAIR NO_X allowances under § 97.188(b) or § 97.188(c) (subject to the conditions in §§ 97.184(h) and 97.186(g)), to the extent such allocation is provided in a State implementation plan revision submitted in accordance with § 51.123(p)(3)(i), (ii), or (iii) of this chapter and approved by the Administrator. If allocation under § 97.188(c) is requested, this statement shall include a statement that the owners and operators of the unit intend to repower the unit before January 1, 2015 and that they will provide, upon request, documentation demonstrating such intent.

(b) *Duty to reapply.* (1) The CAIR designated representative of a CAIR NO_X opt-in unit shall submit a complete CAIR permit application under § 97.122 to renew the CAIR opt-in unit permit in accordance with the permitting authority's regulations for title V operating permits, or the permitting authority's regulations for other federally enforceable permits if applicable, addressing permit renewal.

(2) Unless the permitting authority issues a notification of acceptance of withdrawal of the CAIR NO_X opt-in unit from the CAIR NO_X Annual Trading Program in accordance with § 97.186 or the unit becomes a CAIR NO_X unit under § 97.104, the CAIR NO_X opt-in unit shall remain subject to the requirements for a CAIR NO_X opt-in unit, even if the CAIR designated representative for the CAIR NO_X opt-in unit fails to submit a CAIR permit application that is required for renewal of the CAIR opt-in permit under paragraph (b)(1) of this section.

§ 97.184 Opt-in process.

The permitting authority will issue or deny a CAIR opt-in permit for a unit for which an initial application for a CAIR opt-in permit under § 97.183 is submitted in accordance with the following, to the extent provided in a State implementation plan revision submitted in accordance with § 51.123(p)(3)(i), (ii), or (iii) of this chapter and approved by the Administrator:

(a) *Interim review of monitoring plan.* The permitting authority and the Administrator will determine, on an interim basis, the sufficiency of the monitoring plan accompanying the initial application for a CAIR opt-in permit under § 97.183. A monitoring plan is sufficient, for purposes of interim review, if the plan appears to contain information demonstrating that the NO_X emissions rate and heat input of the unit and all other applicable parameters are monitored and reported in accordance with subpart HH of this part. A determination of sufficiency shall not be construed as acceptance or approval of the monitoring plan.

(b) *Monitoring and reporting.* (1)(i) If the permitting authority and the Administrator determine that the monitoring plan is sufficient under paragraph (a) of this section, the owner or operator shall monitor and report the NO_X emissions rate and the heat input

of the unit and all other applicable parameters, in accordance with subpart HH of this part, starting on the date of certification of the appropriate monitoring systems under subpart HH of this part and continuing until a CAIR opt-in permit is denied under §97.184(f) or, if a CAIR opt-in permit is issued, the date and time when the unit is withdrawn from the CAIR NO_X Annual Trading Program in accordance with §97.186.

(ii) The monitoring and reporting under paragraph (b)(1)(i) of this section shall include the entire control period immediately before the date on which the unit enters the CAIR NO_X Annual Trading Program under §97.184(g), during which period monitoring system availability must not be less than 90 percent under subpart HH of this part and the unit must be in full compliance with any applicable State or Federal emissions or emissions-related requirements.

(2) To the extent the NO_X emissions rate and the heat input of the unit are monitored and reported in accordance with subpart HH of this part for one or more control periods, in addition to the control period under paragraph (b)(1)(ii) of this section, during which control periods monitoring system availability is not less than 90 percent under subpart HH of this part and the unit is in full compliance with any applicable State or Federal emissions or emissions-related requirements and which control periods begin not more than 3 years before the unit enters the CAIR NO_X Annual Trading Program under §97.184(g), such information shall be used as provided in paragraphs (c) and (d) of this section.

(c) *Baseline heat input*. The unit's baseline heat input shall equal:

(1) If the unit's NO_X emissions rate and heat input are monitored and reported for only one control period, in accordance with paragraph (b)(1) of this section, the unit's total heat input (in mmBtu) for the control period; or

(2) If the unit's NO_X emissions rate and heat input are monitored and reported for more than one control period, in accordance with paragraphs (b)(1) and (2) of this section, the average of the amounts of the unit's total heat input (in mmBtu) for the control periods under paragraphs (b)(1)(ii) and (2) of this section.

(d) *Baseline* NO_X *emission rate*. The unit's baseline NO_X emission rate shall equal:

(1) If the unit's NO_X emissions rate and heat input are monitored and reported for only one control period, in accordance with paragraph (b)(1) of this section, the unit's NO_X emissions rate (in lb/mmBtu) for the control period;

(2) If the unit's NO_X emissions rate and heat input are monitored and reported for more than one control period, in accordance with paragraphs (b)(1) and (2) of this section, and the unit does not have add-on NO_X emission controls during any such control periods, the average of the amounts of the unit's NO_X emissions rate (in lb/mmBtu) for the control periods under paragraphs (b)(1)(ii) and (2) of this section; or

(3) If the unit's NO_X emissions rate and heat input are monitored and reported for more than one control period, in accordance with paragraphs (b)(1) and (2) of this section, and the unit has add-on NO_X emission controls during any such control periods, the average of the amounts of the unit's NO_X emissions rate (in lb/mmBtu) for such control periods during which the unit has add-on NO_X emission controls.

(e) *Issuance of CAIR opt-in permit*. After calculating the baseline heat input and the baseline NO_X emissions rate for the unit under paragraphs (c) and (d) of this section and if the permitting authority determines that the CAIR designated representative shows that the unit meets the requirements for a CAIR NO_X opt-in unit in §97.180 and meets the elements certified in §97.183(a)(2), the permitting authority will issue a CAIR opt-in permit. The permitting authority will provide a copy of the CAIR opt-in permit to the Administrator, who will then establish a compliance account for the source that includes the CAIR NO_X opt-in unit unless the source already has a compliance account.

(f) *Issuance of denial of CAIR opt-in permit*. Notwithstanding paragraphs (a) through (e) of this section, if at any time before issuance of a CAIR opt-in

permit for the unit, the permitting authority determines that the CAIR designated representative fails to show that the unit meets the requirements for a CAIR NO_X opt-in unit in § 97.180 or meets the elements certified in § 97.183(a)(2), the permitting authority will issue a denial of a CAIR opt-in permit for the unit.

(g) *Date of entry into CAIR* NO_X *Annual Trading Program.* A unit for which an initial CAIR opt-in permit is issued by the permitting authority shall become a CAIR NO_X opt-in unit, and a CAIR NO_X unit, as of the later of January 1, 2009 or January 1 of the first control period during which such CAIR opt-in permit is issued.

(h) *Repowered CAIR* NO_X *opt-in unit.* (1) If CAIR designated representative requests, and the permitting authority issues a CAIR opt-in permit providing for, allocation to a CAIR NO_X opt-in unit of CAIR NO_X allowances under § 97.188(c) and such unit is repowered after its date of entry into the CAIR NO_X Annual Trading Program under paragraph (g) of this section, the repowered unit shall be treated as a CAIR NO_X opt-in unit replacing the original CAIR NO_X opt-in unit, as of the date of start-up of the repowered unit's combustion chamber.

(2) Notwithstanding paragraphs (c) and (d) of this section, as of the date of start-up under paragraph (h)(1) of this section, the repowered unit shall be deemed to have the same date of commencement of operation, date of commencement of commercial operation, baseline heat input, and baseline NO_X emission rate as the original CAIR NO_X opt-in unit, and the original CAIR NO_X opt-in unit shall no longer be treated as a CAIR NO_X opt-in unit or a CAIR NO_X unit.

[65 FR 2727, Jan. 18, 2000, as amended at 71 FR 74795, Dec. 13, 2006]

§ 97.185 CAIR opt-in permit contents.

(a) Each CAIR opt-in permit will contain:

(1) All elements required for a complete CAIR permit application under § 97.122;

(2) The certification in § 97.183(a)(2);

(3) The unit's baseline heat input under § 97.184(c);

(4) The unit's baseline NO_X emission rate under § 97.184(d);

(5) A statement whether the unit is to be allocated CAIR NO_X allowances under § 97.188(b) or § 97.188(c) (subject to the conditions in §§ 97.184(h) and 97.186(g));

(6) A statement that the unit may withdraw from the CAIR NO_X Annual Trading Program only in accordance with § 97.186; and

(7) A statement that the unit is subject to, and the owners and operators of the unit must comply with, the requirements of § 97.187.

(b) Each CAIR opt-in permit is deemed to incorporate automatically the definitions of terms under § 97.102 and, upon recordation by the Administrator under subpart FF or GG of this part or this subpart, every allocation, transfer, or deduction of CAIR NO_X allowances to or from the compliance account of the source that includes a CAIR NO_X opt-in unit covered by the CAIR opt-in permit.

(c) The CAIR opt-in permit shall be included, in a format specified by the permitting authority, in the CAIR permit for the source where the CAIR NO_X opt-in unit is located and in a title V operating permit or other federally enforceable permit for the source.

§ 97.186 Withdrawal from CAIR NO_X Annual Trading Program.

Except as provided under paragraph (g) of this section, a CAIR NO_X opt-in unit may withdraw from the CAIR NO_X Annual Trading Program, but only if the permitting authority issues a notification to the CAIR designated representative of the CAIR NO_X opt-in unit of the acceptance of the withdrawal of the CAIR NO_X opt-in unit in accordance with paragraph (d) of this section.

(a) *Requesting withdrawal.* In order to withdraw a CAIR NO_X opt-in unit from the CAIR NO_X Annual Trading Program, the CAIR designated representative of the CAIR NO_X opt-in unit shall submit to the permitting authority a request to withdraw effective as of midnight of December 31 of a specified calendar year, which date must be at least 4 years after December 31 of the year of entry into the CAIR NO_X Annual Trading Program under § 97.184(g).

The request must be submitted no later than 90 days before the requested effective date of withdrawal.

(b) *Conditions for withdrawal.* Before a CAIR NO_X opt-in unit covered by a request under paragraph (a) of this section may withdraw from the CAIR NO_X Annual Trading Program and the CAIR opt-in permit may be terminated under paragraph (e) of this section, the following conditions must be met:

(1) For the control period ending on the date on which the withdrawal is to be effective, the source that includes the CAIR NO_X opt-in unit must meet the requirement to hold CAIR NO_X allowances under § 97.106(c) and cannot have any excess emissions.

(2) After the requirement for withdrawal under paragraph (b)(1) of this section is met, the Administrator will deduct from the compliance account of the source that includes the CAIR NO_X opt-in unit CAIR NO_X allowances equal in amount to and allocated for the same or a prior control period as any CAIR NO_X allowances allocated to the CAIR NO_X opt-in unit under § 97.188 for any control period for which the withdrawal is to be effective. If there are no remaining CAIR NO_X units at the source, the Administrator will close the compliance account, and the owners and operators of the CAIR NO_X opt-in unit may submit a CAIR NO_X allowance transfer for any remaining CAIR NO_X allowances to another CAIR NO_X Allowance Tracking System in accordance with subpart GG of this part.

(c) *Notification.* (1) After the requirements for withdrawal under paragraphs (a) and (b) of this section are met (including deduction of the full amount of CAIR NO_X allowances required), the permitting authority will issue a notification to the CAIR designated representative of the CAIR NO_X opt-in unit of the acceptance of the withdrawal of the CAIR NO_X opt-in unit as of midnight on December 31 of the calendar year for which the withdrawal was requested.

(2) If the requirements for withdrawal under paragraphs (a) and (b) of this section are not met, the permitting authority will issue a notification to the CAIR designated representative of the CAIR NO_X opt-in unit that the CAIR NO_X opt-in unit's request to withdraw is denied. Such CAIR NO_X opt-in unit shall continue to be a CAIR NO_X opt-in unit.

(d) *Permit amendment.* After the permitting authority issues a notification under paragraph (c)(1) of this section that the requirements for withdrawal have been met, the permitting authority will revise the CAIR permit covering the CAIR NO_X opt-in unit to terminate the CAIR opt-in permit for such unit as of the effective date specified under paragraph (c)(1) of this section. The unit shall continue to be a CAIR NO_X opt-in unit until the effective date of the termination and shall comply with all requirements under the CAIR NO_X Annual Trading Program concerning any control periods for which the unit is a CAIR NO_X opt-in unit, even if such requirements arise or must be complied with after the withdrawal takes effect.

(e) *Reapplication upon failure to meet conditions of withdrawal.* If the permitting authority denies the CAIR NO_X opt-in unit's request to withdraw, the CAIR designated representative may submit another request to withdraw in accordance with paragraphs (a) and (b) of this section.

(f) *Ability to reapply to the CAIR NO_X Annual Trading Program.* Once a CAIR NO_X opt-in unit withdraws from the CAIR NO_X Annual Trading Program and its CAIR opt-in permit is terminated under this section, the CAIR designated representative may not submit another application for a CAIR opt-in permit under § 97.183 for such CAIR NO_X opt-in unit before the date that is 4 years after the date on which the withdrawal became effective. Such new application for a CAIR opt-in permit will be treated as an initial application for a CAIR opt-in permit under § 97.184.

(g) *Inability to withdraw.* Notwithstanding paragraphs (a) through (f) of this section, a CAIR NO_X opt-in unit shall not be eligible to withdraw from the CAIR NO_X Annual Trading Program if the CAIR designated representative of the CAIR NO_X opt-in unit requests, and the permitting authority issues a CAIR NO_X opt-in permit providing for, allocation to the CAIR NO_X opt-in unit of CAIR NO_X allowances under § 97.188(c).

§ 97.187 Change in regulatory status.

(a) *Notification.* If a CAIR NO_X opt-in unit becomes a CAIR NO_X unit under § 97.104, then the CAIR designated representative shall notify in writing the permitting authority and the Administrator of such change in the CAIR NO_X opt-in unit's regulatory status, within 30 days of such change.

(b) *Permitting authority's and Administrator's actions.* (1) If a CAIR NO_X opt-in unit becomes a CAIR NO_X unit under § 97.104, the permitting authority will revise the CAIR NO_X opt-in unit's CAIR opt-in permit to meet the requirements of a CAIR permit under § 97.123, and remove the CAIR opt-in permit provisions, as of the date on which the CAIR NO_X opt-in unit becomes a CAIR NO_X unit under § 97.104.

(2)(i) The Administrator will deduct from the compliance account of the source that includes the CAIR NO_X opt-in unit that becomes a CAIR NO_X unit under § 97.104, CAIR NO_X allowances equal in amount to and allocated for the same or a prior control period as:

(A) Any CAIR NO_X allowances allocated to the CAIR NO_X opt-in unit under § 97.188 for any control period after the date on which the CAIR NO_X opt-in unit becomes a CAIR NO_X unit under § 97.104; and

(B) If the date on which the CAIR NO_X opt-in unit becomes a CAIR NO_X unit under § 97.104 is not December 31, the CAIR NO_X allowances allocated to the CAIR NO_X opt-in unit under § 97.188 for the control period that includes the date on which the CAIR NO_X opt-in unit becomes a CAIR NO_X unit under § 97.104, multiplied by the ratio of the number of days, in the control period, starting with the date on which the CAIR NO_X opt-in unit becomes a CAIR NO_X unit under § 97.104 divided by the total number of days in the control period and rounded to the nearest whole allowance as appropriate.

(ii) The CAIR designated representative shall ensure that the compliance account of the source that includes the CAIR NO_X opt-in unit that becomes a CAIR NO_X unit under § 97.104 contains the CAIR NO_X allowances necessary for completion of the deduction under paragraph (b)(2)(i) of this section.

(3)(i) For every control period after the date on which the CAIR NO_X opt-in unit becomes a CAIR NO_X unit under § 97.104, the CAIR NO_X opt-in unit will be allocated CAIR NO_X allowances under § 97.142.

(ii) If the date on which the CAIR NO_X opt-in unit becomes a CAIR NO_X unit under § 97.104 is not December 31, the following amount of CAIR NO_X allowances will be allocated to the CAIR NO_X opt-in unit (as a CAIR NO_X unit) under (97.142 for the control period that includes the date on which the CAIR NO_X opt-in unit becomes a CAIR NO_X unit under § 97.104:

(A) The amount of CAIR NO_X allowances otherwise allocated to the CAIR NO_X opt-in unit (as a CAIR NO_X unit) under § 97.142 for the control period multiplied by;

(B) The ratio of the number of days, in the control period, starting with the date on which the CAIR NO_X opt-in unit becomes a CAIR NO_X unit under § 97.104, divided by the total number of days in the control period; and

(C) Rounded to the nearest whole allowance as appropriate.

[65 FR 2727, Jan. 18, 2000, as amended at 71 FR 74795, Dec. 13, 2006]

§ 97.188 CAIR NO_X allowance allocations to CAIR NO_X opt-in units.

(a) *Timing requirements.* (1) When the CAIR opt-in permit is issued under § 97.184(e), the permitting authority will allocate CAIR NO_X allowances to the CAIR NO_X opt-in unit, and submit to the Administrator the allocation for the control period in which a CAIR NO_X opt-in unit enters the CAIR NO_X Annual Trading Program under § 97.184(g), in accordance with paragraph (b) or (c) of this section.

(2) By no later than October 31 of the control period after the control period in which a CAIR NO_X opt-in unit enters the CAIR NO_X Annual Trading Program under § 97.184(g) and October 31 of each year thereafter, the permitting authority will allocate CAIR NO_X allowances to the CAIR NO_X opt-in unit, and submit to the Administrator the allocation for the control period that includes such submission deadline and in which the unit is a CAIR NO_X opt-in unit, in accordance with paragraph (b) or (c) of this section.

(b) *Calculation of allocation.* For each control period for which a CAIR NO_X

opt-in unit is to be allocated CAIR NO_X allowances, the permitting authority will allocate in accordance with the following procedures, if provided in a State implementation plan revision submitted in accordance with § 51.123(p)(3)(i), (ii), or (iii) of this chapter and approved by the Administrator:

(1) The heat input (in mmBtu) used for calculating the CAIR NO_X allowance allocation will be the lesser of:

(i) The CAIR NO_X opt-in unit's baseline heat input determined under § 97.184(c); or

(ii) The CAIR NO_X opt-in unit's heat input, as determined in accordance with subpart HH of this part, for the immediately prior control period, except when the allocation is being calculated for the control period in which the CAIR NO_X opt-in unit enters the CAIR NO_X Annual Trading Program under § 97.184(g).

(2) The NO_X emission rate (in lb/mmBtu) used for calculating CAIR NO_X allowance allocations will be the lesser of:

(i) The CAIR NO_X opt-in unit's baseline NO_X emissions rate (in lb/mmBtu) determined under § 97.184(d) and multiplied by 70 percent; or

(ii) The most stringent State or Federal NO_X emissions limitation applicable to the CAIR NO_X opt-in unit at any time during the control period for which CAIR NO_X allowances are to be allocated.

(3) The permitting authority will allocate CAIR NO_X allowances to the CAIR NO_X opt-in unit in an amount equaling the heat input under paragraph (b)(1) of this section, multiplied by the NO_X emission rate under paragraph (b)(2) of this section, divided by 2,000 lb/ton, and rounded to the nearest whole allowance as appropriate.

(c) Notwithstanding paragraph (b) of this section and if the CAIR designated representative requests, and the permitting authority issues a CAIR opt-in permit (based on a demonstration of the intent to repower stated under § 97.183(a)(5)) providing for, allocation to a CAIR NO_X opt-in unit of CAIR NO_X allowances under this paragraph (subject to the conditions in §§ 97.184(h) and 97.186(g)), the permitting authority will allocate to the CAIR NO_X opt-in unit as follows, if provided in a State implementation plan revision submitted in accordance with (51.123(p)(3)(i), (ii), or (iii) of this chapter and approved by the Administrator:

(1) For each control period in 2009 through 2014 for which the CAIR NO_X opt-in unit is to be allocated CAIR NO_X allowances,

(i) The heat input (in mmBtu) used for calculating CAIR NO_X allowance allocations will be determined as described in paragraph (b)(1) of this section.

(ii) The NO_X emission rate (in lb/mmBtu) used for calculating CAIR NO_X allowance allocations will be the lesser of:

(A) The CAIR NO_X opt-in unit's baseline NO_X emissions rate (in lb/mmBtu) determined under § 97.184(d); or

(B) The most stringent State or Federal NO_X emissions limitation applicable to the CAIR NO_X opt-in unit at any time during the control period in which the CAIR NO_X opt-in unit enters the CAIR NO_X Annual Trading Program under § 97.184(g).

(iii) The permitting authority will allocate CAIR NO_X allowances to the CAIR NO_X opt-in unit in an amount equaling the heat input under paragraph (c)(1)(i) of this section, multiplied by the NO_X emission rate under paragraph (c)(1)(ii) of this section, divided by 2,000 lb/ton, and rounded to the nearest whole allowance as appropriate.

(2) For each control period in 2015 and thereafter for which the CAIR NO_X opt-in unit is to be allocated CAIR NO_X allowances,

(i) The heat input (in mmBtu) used for calculating the CAIR NO_X allowance allocations will be determined as described in paragraph (b)(1) of this section.

(ii) The NO_X emission rate (in lb/mmBtu) used for calculating the CAIR NO_X allowance allocation will be the lesser of:

(A) 0.15 lb/mmBtu;

(B) The CAIR NO_X opt-in unit's baseline NO_X emissions rate (in lb/mmBtu) determined under § 97.184(d); or

(C) The most stringent State or Federal NO_X emissions limitation applicable to the CAIR NO_X opt-in unit at any time during the control period for

which CAIR NO_X allowances are to be allocated.

(iii) The permitting authority will allocate CAIR NO_X allowances to the CAIR NO_X opt-in unit in an amount equaling the heat input under paragraph (c)(2)(i) of this section, multiplied by the NO_X emission rate under paragraph (c)(2)(ii) of this section, divided by 2,000 lb/ton, and rounded to the nearest whole allowance as appropriate.

(d) *Recordation*. If provided in a State implementation plan revision submitted in accordance with § 51.123(p)(3)(i), (ii), or (iii) of this chapter and approved by the Administrator:

(1) The Administrator will record, in the compliance account of the source that includes the CAIR NO_X opt-in unit, the CAIR NO_X allowances allocated by the permitting authority to the CAIR NO_X opt-in unit under paragraph (a)(1) of this section.

(2) By December 1 of the control period in which a CAIR NO_X opt-in unit enters the CAIR NO_X Annual Trading Program under § 97.184(g) and December 1 of each year thereafter, the Administrator will record, in the compliance account of the source that includes the CAIR NO_X opt-in unit, the CAIR NO_X allowances allocated by the permitting authority to the CAIR NO_X opt-in unit under paragraph (a)(2) of this section.

APPENDIX A TO SUBPART II OF PART 97—STATES WITH APPROVED STATE IMPLEMENTATION PLAN REVISIONS CONCERNING CAIR NO_X OPT-IN UNITS

1. The following States have State Implementation Plan revisions under § 51.123(p)(3) of this chapter approved by the Administrator and establishing procedures providing for CAIR NO_X opt-in units under subpart II of this part and allocation of CAIR NO_X allowances to such units under § 97.188(b):

Indiana
Michigan
North Carolina
Ohio
South Carolina
Tennessee

2. The following States have State Implementation Plan revisions under § 51.123(p)(3) of this chapter approved by the Administrator and establishing procedures providing for CAIR NO_X opt-in units under subpart II of this part and allocation of CAIR NO_X allowances to such units under § 97.188(c):

Indiana
Michigan
Ohio
North Carolina
South Carolina
Tennessee

[65 FR 2727, Jan. 18, 2000, as amended at 72 FR 46394, Aug. 20, 2007; 72 FR 56920, Oct. 5, 2007; 72 FR 57215, Oct. 9, 2007; 72 FR 59487, Oct. 22, 2007; 72 FR 72262, Dec. 20, 2007; 73 FR 6040, Feb. 1, 2008]

Subpart AAA—CAIR SO_2 Trading Program General Provisions

§ 97.201 Purpose.

This subpart and subparts BBB through III set forth the general provisions and the designated representative, permitting, allowance, monitoring, and opt-in provisions for the Federal Clean Air Interstate Rule (CAIR) SO_2 Trading Program, under section 110 of the Clean Air Act and § 52.36 of this chapter, as a means of mitigating interstate transport of fine particulates and sulfur dioxide.

§ 97.202 Definitions.

The terms used in this subpart and subparts BBB through III shall have the meanings set forth in this section as follows:

Account number means the identification number given by the Administrator to each CAIR SO_2 Allowance Tracking System account.

Acid Rain emissions limitation means a limitation on emissions of sulfur dioxide or nitrogen oxides under the Acid Rain Program.

Acid Rain Program means a multistate sulfur dioxide and nitrogen oxides air pollution control and emission reduction program established by the Administrator under title IV of the CAA and parts 72 through 78 of this chapter.

Administrator means the Administrator of the United States Environmental Protection Agency or the Administrator's duly authorized representative.

Allocate or *allocation* means, with regard to CAIR SO_2 allowances issued under the Acid Rain Program, the determination by the Administrator of the amount of such CAIR SO_2 allowances to be initially credited to a CAIR SO_2 unit or other entity and, with regard to CAIR SO_2 allowances issued

under § 97.288 or provisions of a State implementation plan that are approved under § 51.124(o)(1) or (2) or (r) of this chapter, the determination by a permitting authority of the amount of such CAIR SO_2 allowances to be initially credited to a CAIR SO_2 unit or other entity.

Allowance transfer deadline means, for a control period, midnight of March 1 (if it is a business day), or midnight of the first business day thereafter (if March 1 is not a business day), immediately following the control period and is the deadline by which a CAIR SO_2 allowance transfer must be submitted for recordation in a CAIR SO_2 source's compliance account in order to be used to meet the source's CAIR SO_2 emissions limitation for such control period in accordance with § 97.254.

Alternate CAIR designated representative means, for a CAIR SO_2 source and each CAIR SO_2 unit at the source, the natural person who is authorized by the owners and operators of the source and all such units at the source, in accordance with subparts BBB and III of this part, to act on behalf of the CAIR designated representative in matters pertaining to the CAIR SO_2 Trading Program. If the CAIR SO_2 source is also a CAIR NO_X source, then this natural person shall be the same person as the alternate CAIR designated representative under the CAIR NO_X Annual Trading Program. If the CAIR SO_2 source is also a CAIR NO_X Ozone Season source, then this natural person shall be the same person as the alternate CAIR designated representative under the CAIR NO_X Ozone Season Trading Program. If the CAIR SO_2 source is also subject to the Acid Rain Program, then this natural person shall be the same person as the alternate designated representative under the Acid Rain Program. If the CAIR SO_2 source is also subject to the Hg Budget Trading Program, then this natural person shall be the same person as the alternate Hg designated representative under the Hg Budget Trading Program.

Automated data acquisition and handling system or *DAHS* means that component of the continuous emission monitoring system, or other emissions monitoring system approved for use under subpart HHH of this part, designed to interpret and convert individual output signals from pollutant concentration monitors, flow monitors, diluent gas monitors, and other component parts of the monitoring system to produce a continuous record of the measured parameters in the measurement units required by subpart HHH of this part.

Biomass means—

(1) Any organic material grown for the purpose of being converted to energy;

(2) Any organic byproduct of agriculture that can be converted into energy; or

(3) Any material that can be converted into energy and is nonmerchantable for other purposes, that is segregated from other nonmerchantable material, and that is;

(i) A forest-related organic resource, including mill residues, precommercial thinnings, slash, brush, or byproduct from conversion of trees to merchantable material; or

(ii) A wood material, including pallets, crates, dunnage, manufacturing and construction materials (other than pressure-treated, chemically-treated, or painted wood products), and landscape or right-of-way tree trimmings.

Boiler means an enclosed fossil- or other-fuel-fired combustion device used to produce heat and to transfer heat to recirculating water, steam, or other medium.

Bottoming-cycle cogeneration unit means a cogeneration unit in which the energy input to the unit is first used to produce useful thermal energy and at least some of the reject heat from the useful thermal energy application or process is then used for electricity production.

CAIR authorized account representative means, with regard to a general account, a responsible natural person who is authorized, in accordance with subparts BBB, FFF, and III of this part, to transfer and otherwise dispose of CAIR SO_2 allowances held in the general account and, with regard to a compliance account, the CAIR designated representative of the source.

CAIR designated representative means, for a CAIR SO_2 source and each CAIR

SO_2 unit at the source, the natural person who is authorized by the owners and operators of the source and all such units at the source, in accordance with subparts BBB and III of this part, to represent and legally bind each owner and operator in matters pertaining to the CAIR SO_2 Trading Program. If the CAIR SO_2 source is also a CAIR NO_X source, then this natural person shall be the same person as the CAIR designated representative under the CAIR NO_X Annual Trading Program. If the CAIR SO_2 source is also a CAIR NO_X Ozone Season source, then this natural person shall be the same person as the CAIR designated representative under the CAIR NO_X Ozone Season Trading Program. If the CAIR SO_2 source is also subject to the Acid Rain Program, then this natural person shall be the same person as the designated representative under the Acid Rain Program. If the CAIR SO_2 source is also subject to the Hg Budget Trading Program, then this natural person shall be the same person as the Hg designated representative under the Hg Budget Trading Program.

CAIR NO_X Annual Trading Program means a multi-state nitrogen oxides air pollution control and emission reduction program established by the Administrator in accordance with subparts AA through II of this part and § 51.123(p) and 52.35 of this chapter or approved and administered by the Administrator in accordance with subparts AA through II of part 96 of this chapter and § 51.123(o)(1) or (2) of this chapter, as a means of mitigating interstate transport of fine particulates and nitrogen oxides.

CAIR NO_X Ozone Season source means a source that is subject to the CAIR NO_X Ozone Season Trading Program.

CAIR NO_X Ozone Season Trading Program means a multi-state nitrogen oxides air pollution control and emission reduction program established by the Administrator in accordance with subparts AAAA through IIII of this part and § 51.123(ee) and 52.35 of this chapter or approved and administered by the Administrator in accordance with subparts AAAA through IIII of part 96 and § 51.123(aa)(1) or (2) (and (bb)(1)), (bb)(2), or (dd) of this chapter, as a means of mitigating interstate transport of ozone and nitrogen oxides.

CAIR NO_X source means a source that is subject to the CAIR NO_X Annual Trading Program.

CAIR permit means the legally binding and federally enforceable written document, or portion of such document, issued by the permitting authority under subpart CCC of this part, including any permit revisions, specifying the CAIR SO_2 Trading Program requirements applicable to a CAIR SO_2 source, to each CAIR SO_2 unit at the source, and to the owners and operators and the CAIR designated representative of the source and each such unit.

CAIR SO_2 allowance means a limited authorization issued by the Administrator under the Acid Rain Program, by a permitting authority under § 97.288, or by a permitting authority under provisions of a State implementation plan that are approved under § 51.124(o)(1) or (2) or (r) of this chapter, to emit sulfur dioxide during the control period of the specified calendar year for which the authorization is allocated or of any calendar year thereafter under the CAIR SO_2 Trading Program as follows:

(1) For one CAIR SO_2 allowance allocated for a control period in a year before 2010, one ton of sulfur dioxide, except as provided in § 97.254(b);

(2) For one CAIR SO_2 allowance allocated for a control period in 2010 through 2014, 0.50 ton of sulfur dioxide, except as provided in § 97.254(b); and

(3) For one CAIR SO_2 allowance allocated for a control period in 2015 or later, 0.35 ton of sulfur dioxide, except as provided in § 97.254(b).

(4) An authorization to emit sulfur dioxide that is not issued under the Acid Rain Program, § 97.288, or provisions of a State implementation plan that are approved under § 51.124(o)(1) or (2) or (r) of this chapter shall not be a CAIR SO_2 allowance.

CAIR SO_2 allowance deduction or *deduct CAIR SO_2 allowances* means the permanent withdrawal of CAIR SO_2 allowances by the Administrator from a compliance account, *e.g.*, in order to account for a specified number of tons of total sulfur dioxide emissions from all CAIR SO_2 units at a CAIR SO_2

source for a control period, determined in accordance with subpart HHH of this part, or to account for excess emissions.

CAIR SO_2 Allowance Tracking System means the system by which the Administrator records allocations, deductions, and transfers of CAIR SO_2 allowances under the CAIR SO_2 Trading Program. This is the same system as the Allowance Tracking System under § 72.2 of this chapter by which the Administrator records allocations, deduction, and transfers of Acid Rain SO_2 allowances under the Acid Rain Program.

CAIR SO_2 Allowance Tracking System account means an account in the CAIR SO_2 Allowance Tracking System established by the Administrator for purposes of recording the allocation, holding, transferring, or deducting of CAIR SO_2 allowances. Such allowances will be allocated, held, deducted, or transferred only as whole allowances.

CAIR SO_2 allowances held or *hold CAIR SO_2 allowances* means the CAIR SO_2 allowances recorded by the Administrator, or submitted to the Administrator for recordation, in accordance with subparts FFF, GGG, and III of this part or part 73 of this chapter, in a CAIR SO_2 Allowance Tracking System account.

CAIR SO_2 emissions limitation means, for a CAIR SO_2 source, the tonnage equivalent, in SO_2 emissions in a control period, of the CAIR SO_2 allowances available for deduction for the source under § 97.254(a) and (b) for the control period.

CAIR SO_2 source means a source that includes one or more CAIR SO_2 units.

CAIR SO_2 Trading Program means a multi-state sulfur dioxide air pollution control and emission reduction program established by the Administrator in accordance with subparts AAA through III of this part and §§ 51.124(r) and 52.36 of this chapter or approved and administered by the Administrator in accordance with subparts AAA through III of part 96 of this chapter and § 51.124(o) (1) or (2) of this chapter, as a means of mitigating interstate transport of fine particulates and sulfur dioxide.

CAIR SO_2 unit means a unit that is subject to the CAIR SO_2 Trading Program under § 97.204 and, except for purposes of § 97.205, a CAIR SO_2 opt-in unit under subpart III of this part.

Certifying official means:

(1) For a corporation, a president, secretary, treasurer, or vice-president or the corporation in charge of a principal business function or any other person who performs similar policy or decision-making functions for the corporation;

(2) For a partnership or sole proprietorship, a general partner or the proprietor respectively; or

(3) For a local government entity or State, Federal, or other public agency, a principal executive officer or ranking elected official.

Clean Air Act or *CAA* means the Clean Air Act, 42 U.S.C. 7401, *et seq.*

Coal means any solid fuel classified as anthracite, bituminous, subbituminous, or lignite.

Coal-derived fuel means any fuel (whether in a solid, liquid, or gaseous state) produced by the mechanical, thermal, or chemical processing of coal.

Coal-fired means combusting any amount of coal or coal-derived fuel, alone, or in combination with any amount of any other fuel.

Cogeneration unit means a stationary, fossil-fuel-fired boiler or stationary, fossil-fuel-fired combustion turbine:

(1) Having equipment used to produce electricity and useful thermal energy for industrial, commercial, heating, or cooling purposes through the sequential use of energy; and

(2) Producing during the 12-month period starting on the date the unit first produces electricity and during any calendar year after the calendar year in which the unit first produces electricity—

(i) For a topping-cycle cogeneration unit,

(A) Useful thermal energy not less than 5 percent of total energy output; and

(B) Useful power that, when added to one-half of useful thermal energy produced, is not less then 42.5 percent of total energy input, if useful thermal energy produced is 15 percent or more of total energy output, or not less than

45 percent of total energy input, if useful thermal energy produced is less than 15 percent of total energy output.

(ii) For a bottoming-cycle cogeneration unit, useful power not less than 45 percent of total energy input;

(3) Provided that the total energy input under paragraphs (2)(i)(B) and (2)(ii) of this definition shall equal the unit's total energy input from all fuel except biomass if the unit is a boiler.

Combustion turbine means:

(1) An enclosed device comprising a compressor, a combustor, and a turbine and in which the flue gas resulting from the combustion of fuel in the combustor passes through the turbine, rotating the turbine; and

(2) If the enclosed device under paragraph (1) of this definition is combined cycle, any associated duct burner, heat recovery steam generator, and steam turbine.

Commence commercial operation means, with regard to a unit:

(1) To have begun to produce steam, gas, or other heated medium used to generate electricity for sale or use, including test generation, except as provided in § 97.205 and § 97.284(h).

(i) For a unit that is a CAIR SO_2 unit under § 97.204 on the later of November 15, 1990 or the date the unit commences commercial operation as defined in paragraph (1) of this definition and that subsequently undergoes a physical change (other than replacement of the unit by a unit at the same source), such date shall remain the date of commencement of commercial operation of the unit, which shall continue to be treated as the same unit.

(ii) For a unit that is a CAIR SO_2 unit under § 97.204 on the later of November 15, 1990 or the date the unit commences commercial operation as defined in paragraph (1) of this definition and that is subsequently replaced by a unit at the same source (*e.g.*, repowered), such date shall remain the replaced unit's date of commencement of commercial operation, and the replacement unit shall be treated as a separate unit with a separate date for commencement of commercial operation as defined in paragraph (1) or (2) of this definition as appropriate.

(2) Notwithstanding paragraph (1) of this definition and except as provided in § 97.205, for a unit that is not a CAIR SO_2 unit under § 97.204 on the later of November 15, 1990 or the date the unit commences commercial operation as defined in paragraph (1) of this definition, the unit's date for commencement of commercial operation shall be the date on which the unit becomes a CAIR SO_2 unit under § 97.204.

(i) For a unit with a date for commencement of commercial operation as defined in paragraph (2) of this definition and that subsequently undergoes a physical change (other than replacement of the unit by a unit at the same source), such date shall remain the date of commencement of commercial operation of the unit, which shall continue to be treated as the same unit.

(ii) For a unit with a date for commencement of commercial operation as defined in paragraph (2) of this definition and that is subsequently replaced by a unit at the same source (*e.g.*, repowered), such date shall remain the replaced unit's date of commencement of commercial operation, and the replacement unit shall be treated as a separate unit with a separate date for commencement of commercial operation as defined in paragraph (1) or (2) of this definition as appropriate.

Commence operation means:

(1) To have begun any mechanical, chemical, or electronic process, including, with regard to a unit, start-up of a unit's combustion chamber, except as provided in § 97.284(h).

(2) For a unit that undergoes a physical change (other than replacement of the unit by a unit at the same source) after the date the unit commences operation as defined in paragraph (1) of this definition, such date shall remain the date of commencement of operation of the unit, which shall continue to be treated as the same unit.

(3) For a unit that is replaced by a unit at the same source (*e.g.*, repowered) after the date the unit commences operation as defined in paragraph (1) of this definition, such date shall remain the replaced unit's date of commencement of operation, and the replacement unit shall be treated as a separate unit with a separate date for commencement of operation as defined

in paragraph (1), (2), or (3) of this definition as appropriate, except as provided in § 97.284(h).

Common stack means a single flue through which emissions from 2 or more units are exhausted.

Compliance account means a CAIR SO_2 Allowance Tracking System account, established by the Administrator for a CAIR SO_2 source subject to an Acid Rain emissions limitations under § 73.31(a) or (b) of this chapter or for any other CAIR SO_2 source under subpart FFF or III of this part, in which any CAIR SO_2 allowance allocations for the CAIR SO_2 units at the source are initially recorded and in which are held any CAIR SO_2 allowances available for use for a control period in order to meet the source's CAIR SO_2 emissions limitation in accordance with § 97.254.

Continuous emission monitoring system or *CEMS* means the equipment required under subpart HHH of this part to sample, analyze, measure, and provide, by means of readings recorded at least once every 15 minutes (using an automated data acquisition and handling system (DAHS)), a permanent record of sulfur dioxide emissions, stack gas volumetric flow rate, stack gas moisture content, and oxygen or carbon dioxide concentration (as applicable), in a manner consistent with part 75 of this chapter. The following systems are the principal types of continuous emission monitoring systems required under subpart HHH of this part:

(1) A flow monitoring system, consisting of a stack flow rate monitor and an automated data acquisition and handling system and providing a permanent, continuous record of stack gas volumetric flow rate, in standard cubic feet per hour (scfh);

(2) A sulfur dioxide monitoring system, consisting of a SO_2 pollutant concentration monitor and an automated data acquisition and handling system and providing a permanent, continuous record of SO_2 emissions, in parts per million (ppm);

(3) A moisture monitoring system, as defined in § 75.11(b)(2) of this chapter and providing a permanent, continuous record of the stack gas moisture content, in percent H_2O;

(4) A carbon dioxide monitoring system, consisting of a CO_2 pollutant concentration monitor (or an oxygen monitor plus suitable mathematical equations from which the CO_2 concentration is derived) and an automated data acquisition and handling system and providing a permanent, continuous record of CO_2 emissions, in percent CO_2; and

(5) An oxygen monitoring system, consisting of an O_2 concentration monitor and an automated data acquisition and handling system and providing a permanent, continuous record of O_2 in percent O_2.

Control period means the period beginning January 1 of a calendar year, except as provided in § 97.206(c)(2), and ending on December 31 of the same year, inclusive.

Emissions means air pollutants exhausted from a unit or source into the atmosphere, as measured, recorded, and reported to the Administrator by the CAIR designated representative and as determined by the Administrator in accordance with subpart HHH of this part.

Excess emissions means any ton, or portion of a ton, of sulfur dioxide emitted by the CAIR SO_2 units at a CAIR SO_2 source during a control period that exceeds the CAIR SO_2 emissions limitation for the source, provided that any portion of a ton of excess emissions shall be treated as one ton of excess emissions.

Fossil fuel means natural gas, petroleum, coal, or any form of solid, liquid, or gaseous fuel derived from such material.

Fossil-fuel-fired means, with regard to a unit, combusting any amount of fossil fuel in any calendar year.

General account means a CAIR SO_2 Allowance Tracking System account, established under subpart FFF of this part, that is not a compliance account.

Generator means a device that produces electricity.

Heat input means, with regard to a specified period of time, the product (in mmBtu/time) of the gross calorific value of the fuel (in Btu/lb) divided by 1,000,000 Btu/mmBtu and multiplied by the fuel feed rate into a combustion device (in lb of fuel/time), as measured,

recorded, and reported to the Administrator by the CAIR designated representative and determined by the Administrator in accordance with subpart HHH of this part and excluding the heat derived from preheated combustion air, recirculated flue gases, or exhaust from other sources.

Heat input rate means the amount of heat input (in mmBtu) divided by unit operating time (in hr) or, with regard to a specific fuel, the amount of heat input attributed to the fuel (in mmBtu) divided by the unit operating time (in hr) during which the unit combusts the fuel.

Hg Budget Trading Program means a multi-state Hg air pollution control and emission reduction program approved and administered by the Administrator in accordance subpart HHHH of part 60 of this chapter and § 60.24(h)(6), or established by the Administrator under section 111 of the Clean Air Act, as a means of reducing national Hg emissions.

Life-of-the-unit, firm power contractual arrangement means a unit participation power sales agreement under which a utility or industrial customer reserves, or is entitled to receive, a specified amount or percentage of nameplate capacity and associated energy generated by any specified unit and pays its proportional amount of such unit's total costs, pursuant to a contract:

(1) For the life of the unit;

(2) For a cumulative term of no less than 30 years, including contracts that permit an election for early termination; or

(3) For a period no less than 25 years or 70 percent of the economic useful life of the unit determined as of the time the unit is built, with option rights to purchase or release some portion of the nameplate capacity and associated energy generated by the unit at the end of the period.

Maximum design heat input means the maximum amount of fuel per hour (in Btu/hr) that a unit is capable of combusting on a steady state basis as of the initial installation of the unit as specified by the manufacturer of the unit.

Monitoring system means any monitoring system that meets the requirements of subpart HHH of this part, including a continuous emissions monitoring system, an alternative monitoring system, or an excepted monitoring system under part 75 of this chapter.

Most stringent State or Federal SO^2 emissions limitation means, with regard to a unit, the lowest SO_2 emissions limitation (in terms of lb/mmBtu) that is applicable to the unit under State or Federal law, regardless of the averaging period to which the emissions limitation applies.

Nameplate capacity means, starting from the initial installation of a generator, the maximum electrical generating output (in MWe) that the generator is capable of producing on a steady state basis and during continuous operation (when not restricted by seasonal or other deratings) as of such installation as specified by the manufacturer of the generator or, starting from the completion of any subsequent physical change in the generator resulting in an increase in the maximum electrical generating output (in MWe) that the generator is capable of producing on a steady state basis and during continuous operation (when not restricted by seasonal or other deratings), such increased maximum amount as of such completion as specified by the person conducting the physical change.

Operator means any person who operates, controls, or supervises a CAIR SO_2 unit or a CAIR SO_2 source and shall include, but not be limited to, any holding company, utility system, or plant manager of such a unit or source.

Owner means any of the following persons:

(1) With regard to a CAIR SO_2 source or a CAIR SO_2 unit at a source, respectively:

(i) Any holder of any portion of the legal or equitable title in a CAIR SO_2 unit at the source or the CAIR SO_2 unit;

(ii) Any holder of a leasehold interest in a CAIR SO_2 unit at the source or the CAIR SO_2 unit; or

(iii) Any purchaser of power from a CAIR SO_2 unit at the source or the CAIR SO_2 unit under a life-of-the-unit, firm power contractual arrangement;

provided that, unless expressly provided for in a leasehold agreement, owner shall not include a passive lessor, or a person who has an equitable interest through such lessor, whose rental payments are not based (either directly or indirectly) on the revenues or income from such CAIR SO_2 unit; or

(2) With regard to any general account, any person who has an ownership interest with respect to the CAIR SO_2 allowances held in the general account and who is subject to the binding agreement for the CAIR authorized account representative to represent the person's ownership interest with respect to CAIR SO_2 allowances.

Permitting authority means the State air pollution control agency, local agency, other State agency, or other agency authorized by the Administrator to issue or revise permits to meet the requirements of the CAIR SO_2 Trading Program or, if no such agency has been so authorized, the Administrator.

Potential electrical output capacity means 33 percent of a unit's maximum design heat input, divided by 3,413 Btu/kWh, divided by 1,000 kWh/MWh, and multiplied by 8,760 hr/yr.

Receive or receipt of means, when referring to the permitting authority or the Administrator, to come into possession of a document, information, or correspondence (whether sent in hard copy or by authorized electronic transmission), as indicated in an official log, or by a notation made on the document, information, or correspondence, by the permitting authority or the Administrator in the regular course of business.

Recordation, *record*, or *recorded* means, with regard to CAIR SO_2 allowances, the movement of CAIR SO_2 allowances by the Administrator into or between CAIR SO_2 Allowance Tracking System accounts, for purposes of allocation, transfer, or deduction.

Reference method means any direct test method of sampling and analyzing for an air pollutant as specified in § 75.22 of this chapter.

Replacement, *replace*, or *replaced* means, with regard to a unit, the demolishing of a unit, or the permanent shutdown and permanent disabling of a unit, and the construction of another unit (the replacement unit) to be used instead of the demolished or shutdown unit (the replaced unit).

Repowered means, with regard to a unit, replacement of a coal-fired boiler with one of the following coal-fired technologies at the same source as the coal-fired boiler:

(1) Atmospheric or pressurized fluidized bed combustion;

(2) Integrated gasification combined cycle;

(3) Magnetohydrodynamics;

(4) Direct and indirect coal-fired turbines;

(5) Integrated gasification fuel cells; or

(6) As determined by the Administrator in consultation with the Secretary of Energy, a derivative of one or more of the technologies under paragraphs (1) through (5) of this definition and any other coal-fired technology capable of controlling multiple combustion emissions simultaneously with improved boiler or generation efficiency and with significantly greater waste reduction relative to the performance of technology in widespread commercial use as of January 1, 2005.

Sequential use of energy means:

(1) For a topping-cycle cogeneration unit, the use of reject heat from electricity production in a useful thermal energy application or process; or

(2) For a bottoming-cycle cogeneration unit, the use of reject heat from useful thermal energy application or process in electricity production.

Serial number means, for a CAIR SO_2 allowance, the unique identification number assigned to each CAIR SO_2 allowance by the Administrator.

Solid waste incineration unit means a stationary, fossil-fuel-fired boiler or stationary, fossil-fuel-fired combustion turbine that is a ''solid waste incineration unit'' as defined in section 129(g)(1) of the Clean Air Act.

Source means all buildings, structures, or installations located in one or more contiguous or adjacent properties under common control of the same person or persons. For purposes of section 502(c) of the Clean Air Act, a ''source,'' including a ''source'' with multiple units, shall be considered a single ''facility.''

State means one of the States or the District of Columbia that is subject to the CAIR SO_2 Trading Program pursuant to § 52.35 of this chapter.

Submit or serve means to send or transmit a document, information, or correspondence to the person specified in accordance with the applicable regulation:

(1) In person;

(2) By United States Postal Service; or

(3) By other means of dispatch or transmission and delivery. Compliance with any ''submission'' or ''service'' deadline shall be determined by the date of dispatch, transmission, or mailing and not the date of receipt.

Title V operating permit means a permit issued under title V of the Clean Air Act and part 70 or part 71 of this chapter.

Title V operating permit regulations means the regulations that the Administrator has approved or issued as meeting the requirements of title V of the Clean Air Act and part 70 or 71 of this chapter.

Ton means 2,000 pounds. For the purpose of determining compliance with the CAIR SO_2 emissions limitation, total tons of sulfur dioxide emissions for a control period shall be calculated as the sum of all recorded hourly emissions (or the mass equivalent of the recorded hourly emission rates) in accordance with subpart HHH of this part, but with any remaining fraction of a ton equal to or greater than 0.50 tons deemed to equal one ton and any remaining fraction of a ton less than 0.50 tons deemed to equal zero tons.

Topping-cycle cogeneration unit means a cogeneration unit in which the energy input to the unit is first used to produce useful power, including electricity, and at least some of the reject heat from the electricity production is then used to provide useful thermal energy.

Total energy input means, with regard to a cogeneration unit, total energy of all forms supplied to the cogeneration unit, excluding energy produced by the cogeneration unit itself. Each form of energy supplied shall be measured by the lower heating value of that form of energy calculated as follows:

$$LHV = HHV - 10.55(W + 9H)$$

Where:

LHV = lower heating value of fuel in Btu/lb,
HHV = higher heating value of fuel in Btu/lb,
W = Weight % of moisture in fuel, and
H = Weight % of hydrogen in fuel.

Total energy output means, with regard to a cogeneration unit, the sum of useful power and useful thermal energy produced by the cogeneration unit.

Unit means a stationary, fossil-fuel-fired boiler or combustion turbine or other stationary, fossil-fuel-fired combustion device. *Unit operating day* means a calendar day in which a unit combusts any fuel.

Unit operating hour or *hour of unit operation* means an hour in which a unit combusts any fuel.

Useful power means, with regard to a cogeneration unit, electricity or mechanical energy made available for use, excluding any such energy used in the power production process (which process includes, but is not limited to, any on-site processing or treatment of fuel combusted at the unit and any on-site emission controls).

Useful thermal energy means, with regard to a cogeneration unit, thermal energy that is:

(1) Made available to an industrial or commercial process (not a power production process), excluding any heat contained in condensate return or makeup water;

(2) Used in a heating application (*e.g.*, space heating or domestic hot water heating); or

(3) Used in a space cooling application (*i.e.*, thermal energy used by an absorption chiller).

Utility power distribution system means the portion of an electricity grid owned or operated by a utility and dedicated to delivering electricity to customers.

[65 FR 2727, Jan 18, 2000, as amended by 71 FR 74795, Dec. 13, 2006; 72 FR 59207, Oct. 19, 2007]

§ 97.203 Measurements, abbreviations, and acronyms.

Measurements, abbreviations, and acronyms used in this subpart and subparts BBB through III are defined as follows:

Btu—British thermal unit.
CO_2—carbon dioxide.
H_2O—water.
Hg—mercury.
hr—hour.

kW—kilowatt electrical.
kWh—kilowatt hour.
lb—pound.
mmBtu—million Btu.
MWe—megawatt electrical.
MWh—megawatt hour.
NO_X—nitrogen oxides.
O_2—oxygen.
ppm—parts per million.
scfh—standard cubic feet per hour.
SO_2—sulfur dioxide.
yr—year.

§ 97.204 Applicability.

(a) Except as provided in paragraph (b) of this section:

(1) The following units in a State shall be CAIR SO_2 units, and any source that includes one or more such units shall be a CAIR SO_2 source, subject to the requirements of this subpart and subparts BBB through HHH of this part: any stationary, fossil-fuel-fired boiler or stationary, fossil-fuel-fired combustion turbine serving at any time, since the later of November 15, 1990 or the start-up of the unit's combustion chamber, a generator with nameplate capacity of more than 25 MWe producing electricity for sale.

(2) If a stationary boiler or stationary combustion turbine that, under paragraph (a)(1) of this section, is not a CAIR SO_2 unit begins to combust fossil fuel or to serve a generator with nameplate capacity of more than 25 MWe producing electricity for sale, the unit shall become a CAIR SO_2 unit as provided in paragraph (a)(1) of this section on the first date on which it both combusts fossil fuel and serves such generator.

(b) The units in a State that meet the requirements set forth in paragraph (b)(1)(i), (b)(2)(i), or (b)(2)(ii) of this section shall not be CAIR SO_2 units:

(1)(i) Any unit that is a CAIR SO_2 unit under paragraph (a)(1) or (2) of this section:

(A) Qualifying as a cogeneration unit during the 12-month period starting on the date the unit first produces electricity and continuing to qualify as a cogeneration unit; and

(B) Not serving at any time, since the later of November 15, 1990 or the start-up of the unit's combustion chamber, a generator with nameplate capacity of more than 25 MWe supplying in any calendar year more than one-third of the unit's potential electric output capacity or 219,000 MWh, whichever is greater, to any utility power distribution system for sale.

(ii) If a unit qualifies as a cogeneration unit during the 12-month period starting on the date the unit first produces electricity and meets the requirements of paragraphs (b)(1)(i) of this section for at least one calendar year, but subsequently no longer meets all such requirements, the unit shall become a CAIR SO_2 unit starting on the earlier of January 1 after the first calendar year during which the unit first no longer qualifies as a cogeneration unit or January 1 after the first calendar year during which the unit no longer meets the requirements of paragraph (b)(1)(i)(B) of this section.

(2)(i) Any unit that is a CAIR SO_2 unit under paragraph (a)(1) or (2) of this section commencing operation before January 1, 1985:

(A) Qualifying as a solid waste incineration unit; and

(B) With an average annual fuel consumption of non-fossil fuel for 1985–1987 exceeding 80 percent (on a Btu basis) and an average annual fuel consumption of non-fossil fuel for any 3 consecutive calendar years after 1990 exceeding 80 percent (on a Btu basis).

(ii) Any unit that is a CAIR SO_2 unit under paragraph (a)(1) or (2) of this section commencing operation on or after January 1, 1985:

(A) Qualifying as a solid waste incineration unit; and

(B) With an average annual fuel consumption of non-fossil fuel for the first 3 calendar years of operation exceeding 80 percent (on a Btu basis) and an average annual fuel consumption of non-fossil fuel for any 3 consecutive calendar years after 1990 exceeding 80 percent (on a Btu basis).

(iii) If a unit qualifies as a solid waste incineration unit and meets the requirements of paragraph (b)(2)(i) or (ii) of this section for at least 3 consecutive calendar years, but subsequently no longer meets all such requirements, the unit shall become a CAIR SO_2 unit starting on the earlier of January 1 after the first calendar year during which the unit first no

longer qualifies as a solid waste incineration unit or January 1 after the first 3 consecutive calendar years after 1990 for which the unit has an average annual fuel consumption of fossil fuel of 20 percent or more.

(c) A certifying official of an owner or operator of any unit may petition the Administrator at any time for a determination concerning the applicability, under paragraphs (a) and (b) of this section, of the CAIR SO_2 Trading Program to the unit.

(1) *Petition content*. The petition shall be in writing and include the identification of the unit and the relevant facts about the unit. The petition and any other documents provided to the Administrator in connection with the petition shall include the following certification statement, signed by the certifying official: ''I am authorized to make this submission on behalf of the owners and operators of the unit for which the submission is made. I certify under penalty of law that I have personally examined, and am familiar with, the statements and information submitted in this document and all its attachments. Based on my inquiry of those individuals with primary responsibility for obtaining the information, I certify that the statements and information are to the best of my knowledge and belief true, accurate, and complete. I am aware that there are significant penalties for submitting false statements and information or omitting required statements and information, including the possibility of fine or imprisonment.''

(2) *Submission*. The petition and any other documents provided in connection with the petition shall be submitted to the Director of the Clean Air Markets Division (or its successor), U.S. Environmental Protection Agency, who will act on the petition as the Administrator's duly authorized representative.

(3) *Response*. The Administrator will issue a written response to the petition and may request supplemental information relevant to such petition. The Administrator's determination concerning the applicability, under paragraphs (a) and (b) of this section, of the CAIR SO_2 Trading Program to the unit shall be binding on the permitting authority unless the petition or other information or documents provided in connection with the petition are found to have contained significant, relevant errors or omissions.

§ 97.205 Retired unit exemption.

(a)(1) Any CAIR SO_2 unit that is permanently retired and is not a CAIR SO_2 opt-in unit under subpart III of this part shall be exempt from the CAIR SO_2 Trading Program, except for the provisions of this section, §§ 97.202, 97.203, 97.204, 97.206(c)(4) through (7), 97.207, 97.208, and subparts BBB, FFF, and GGG of this part.

(2) The exemption under paragraph (a)(1) of this section shall become effective the day on which the CAIR SO_2 unit is permanently retired. Within 30 days of the unit's permanent retirement, the CAIR designated representative shall submit a statement to the permitting authority otherwise responsible for administering any CAIR permit for the unit and shall submit a copy of the statement to the Administrator. The statement shall state, in a format prescribed by the permitting authority, that the unit was permanently retired on a specific date and will comply with the requirements of paragraph (b) of this section.

(3) After receipt of the statement under paragraph (a)(2) of this section, the permitting authority will amend any permit under subpart CCC of this part covering the source at which the unit is located to add the provisions and requirements of the exemption under paragraphs (a)(1) and (b) of this section.

(b) *Special provisions*. (1) A unit exempt under paragraph (a) of this section shall not emit any sulfur dioxide, starting on the date that the exemption takes effect.

(2) For a period of 5 years from the date the records are created, the owners and operators of a unit exempt under paragraph (a) of this section shall retain, at the source that includes the unit, records demonstrating that the unit is permanently retired. The 5-year period for keeping records may be extended for cause, at any time before the end of the period, in writing by the permitting authority or the Administrator. The owners and operators

bear the burden of proof that the unit is permanently retired.

(3) The owners and operators and, to the extent applicable, the CAIR designated representative of a unit exempt under paragraph (a) of this section shall comply with the requirements of the CAIR SO_2 Trading Program concerning all periods for which the exemption is not in effect, even if such requirements arise, or must be complied with, after the exemption takes effect.

(4) A unit exempt under paragraph (a) of this section and located at a source that is required, or but for this exemption would be required, to have a title V operating permit shall not resume operation unless the CAIR designated representative of the source submits a complete CAIR permit application under § 97.222 for the unit not less than 18 months (or such lesser time provided by the permitting authority) before the later of January 1, 2010 or the date on which the unit resumes operation.

(5) On the earlier of the following dates, a unit exempt under paragraph (a) of this section shall lose its exemption:

(i) The date on which the CAIR designated representative submits a CAIR permit application for the unit under paragraph (b)(4) of this section;

(ii) The date on which the CAIR designated representative is required under paragraph (b)(4) of this section to submit a CAIR permit application for the unit; or

(iii) The date on which the unit resumes operation, if the CAIR designated representative is not required to submit a CAIR permit application for the unit.

(6) For the purpose of applying monitoring, reporting, and recordkeeping requirements under subpart HHH of this part, a unit that loses its exemption under paragraph (a) of this section shall be treated as a unit that commences commercial operation on the first date on which the unit resumes operation.

§ 97.206 Standard requirements.

(a) *Permit requirements.* (1) The CAIR designated representative of each CAIR SO_2 source required to have a title V operating permit and each CAIR SO_2 unit required to have a title V operating permit at the source shall:

(i) Submit to the permitting authority a complete CAIR permit application under § 97.222 in accordance with the deadlines specified in § 97.221; and

(ii) Submit in a timely manner any supplemental information that the permitting authority determines is necessary in order to review a CAIR permit application and issue or deny a CAIR permit.

(2) The owners and operators of each CAIR SO_2 source required to have a title V operating permit and each CAIR SO_2 unit required to have a title V operating permit at the source shall have a CAIR permit issued by the permitting authority under subpart CCC of this part for the source and operate the source and the unit in compliance with such CAIR permit.

(3) Except as provided in subpart III of this part, the owners and operators of a CAIR SO_2 source that is not otherwise required to have a title V operating permit and each CAIR SO_2 unit that is not otherwise required to have a title V operating permit are not required to submit a CAIR permit application, and to have a CAIR permit, under subpart CCC of this part for such CAIR SO_2 source and such CAIR SO_2 unit.

(b) *Monitoring, reporting, and recordkeeping requirements.* (1) The owners and operators, and the CAIR designated representative, of each CAIR SO_2 source and each CAIR SO_2 unit at the source shall comply with the monitoring, reporting, and recordkeeping requirements of subpart HHH of this part.

(2) The emissions measurements recorded and reported in accordance with subpart HHH of this part shall be used to determine compliance by each CAIR SO_2 source with the CAIR SO_2 emissions limitation under paragraph (c) of this section.

(c) *Sulfur dioxide emission requirements.* (1) As of the allowance transfer deadline for a control period, the owners and operators of each CAIR SO_2 source and each CAIR SO_2 unit at the source shall hold, in the source's compliance account, a tonnage equivalent in CAIR SO_2 allowances available for compliance deductions for the control

period, as determined in accordance with § 97.254(a) and (b), not less than the tons of total sulfur dioxide emissions for the control period from all CAIR SO_2 units at the source, as determined in accordance with subpart HHH of this part.

(2) A CAIR SO_2 unit shall be subject to the requirements under paragraph (c)(1) of this section for the control period starting on the later of January 1, 2010 or the deadline for meeting the unit(s monitor certification requirements under § 97.270(b)(1),(2), or (5) and for each control period thereafter.

(3) A CAIR SO_2 allowance shall not be deducted, for compliance with the requirements under paragraph (c)(1) of this section, for a control period in a calendar year before the year for which the CAIR SO_2 allowance was allocated.

(4) CAIR SO_2 allowances shall be held in, deducted from, or transferred into or among CAIR SO_2 Allowance Tracking System accounts in accordance with subparts FFF, GGG, and III of this part.

(5) A CAIR SO_2 allowance is a limited authorization to emit sulfur dioxide in accordance with the CAIR SO_2 Trading Program. No provision of the CAIR SO_2 Trading Program, the CAIR permit application, the CAIR permit, or an exemption under § 97.205 and no provision of law shall be construed to limit the authority of the United States to terminate or limit such authorization.

(6) A CAIR SO_2 allowance does not constitute a property right.

(7) Upon recordation by the Administrator under subpart FFF, GGG, or III of this part, every allocation, transfer, or deduction of a CAIR SO_2 allowance to or from a CAIR SO_2 source's compliance account is incorporated automatically in any CAIR permit of the source.

(d) *Excess emissions requirements.* If a CAIR SO_2 source emits sulfur dioxide during any control period in excess of the CAIR SO_2 emissions limitation, then:

(1) The owners and operators of the source and each CAIR SO_2 unit at the source shall surrender the CAIR SO_2 allowances required for deduction under § 97.254(d)(1) and pay any fine, penalty, or assessment or comply with any other remedy imposed, for the same violations, under the Clean Air Act or applicable State law; and

(2) Each ton of such excess emissions and each day of such control period shall constitute a separate violation of this subpart, the Clean Air Act, and applicable State law.

(e) *Recordkeeping and reporting requirements.* (1) Unless otherwise provided, the owners and operators of the CAIR SO_2 source and each CAIR SO_2 unit at the source shall keep on site at the source each of the following documents for a period of 5 years from the date the document is created. This period may be extended for cause, at any time before the end of 5 years, in writing by the permitting authority or the Administrator.

(i) The certificate of representation under § 97.213 for the CAIR designated representative for the source and each CAIR SO_2 unit at the source and all documents that demonstrate the truth of the statements in the certificate of representation; provided that the certificate and documents shall be retained on site at the source beyond such 5-year period until such documents are superseded because of the submission of a new certificate of representation under § 97.213 changing the CAIR designated representative.

(ii) All emissions monitoring information, in accordance with subpart HHH of this part, provided that to the extent that subpart HHH of this part provides for a 3-year period for recordkeeping, the 3-year period shall apply.

(iii) Copies of all reports, compliance certifications, and other submissions and all records made or required under the CAIR SO_2 Trading Program.

(iv) Copies of all documents used to complete a CAIR permit application and any other submission under the CAIR SO_2 Trading Program or to demonstrate compliance with the requirements of the CAIR SO_2 Trading Program.

(2) The CAIR designated representative of a CAIR SO_2 source and each CAIR SO_2 unit at the source shall submit the reports required under the CAIR SO_2 Trading Program, including those under subpart HHH of this part.

(f) *Liability.* (1) Each CAIR SO_2 source and each CAIR SO_2 unit shall meet the

requirements of the CAIR SO_2 Trading Program.

(2) Any provision of the CAIR SO_2 Trading Program that applies to a CAIR SO_2 source or the CAIR designated representative of a CAIR SO_2 source shall also apply to the owners and operators of such source and of the CAIR SO_2 units at the source.

(3) Any provision of the CAIR SO_2 Trading Program that applies to a CAIR SO_2 unit or the CAIR designated representative of a CAIR SO_2 unit shall also apply to the owners and operators of such unit.

(g) *Effect on other authorities.* No provision of the CAIR SO_2 Trading Program, a CAIR permit application, a CAIR permit, or an exemption under § 97.205 shall be construed as exempting or excluding the owners and operators, and the CAIR designated representative, of a CAIR SO_2 source or CAIR SO_2 unit from compliance with any other provision of the applicable, approved State implementation plan, a federally enforceable permit, or the Clean Air Act.

§ 97.207 Computation of time.

(a) Unless otherwise stated, any time period scheduled, under the CAIR SO_2 Trading Program, to begin on the occurrence of an act or event shall begin on the day the act or event occurs.

(b) Unless otherwise stated, any time period scheduled, under the CAIR SO_2 Trading Program, to begin before the occurrence of an act or event shall be computed so that the period ends the day before the act or event occurs.

(c) Unless otherwise stated, if the final day of any time period, under the CAIR SO_2 Trading Program, falls on a weekend or a State or Federal holiday, the time period shall be extended to the next business day.

§ 97.208 Appeal procedures.

The appeal procedures for decisions of the Administrator under the CAIR SO_2 Trading Program are set forth in part 78 of this chapter.

Subpart BBB—CAIR Designated Representative for CAIR SO_2 Sources

§ 97.210 Authorization and responsibilities of CAIR designated representative.

(a) Except as provided under § 97.211, each CAIR SO_2 source, including all CAIR SO_2 units at the source, shall have one and only one CAIR designated representative, with regard to all matters under the CAIR SO_2 Trading Program concerning the source or any CAIR SO_2 unit at the source.

(b) The CAIR designated representative of the CAIR SO_2 source shall be selected by an agreement binding on the owners and operators of the source and all CAIR SO_2 units at the source and shall act in accordance with the certification statement in § 97.213(a)(4)(iv).

(c) Upon receipt by the Administrator of a complete certificate of representation under § 97.213, the CAIR designated representative of the source shall represent and, by his or her representations, actions, inactions, or submissions, legally bind each owner and operator of the CAIR SO_2 source represented and each CAIR SO_2 unit at the source in all matters pertaining to the CAIR SO_2 Trading Program, notwithstanding any agreement between the CAIR designated representative and such owners and operators. The owners and operators shall be bound by any decision or order issued to the CAIR designated representative by the permitting authority, the Administrator, or a court regarding the source or unit.

(d) No CAIR permit will be issued, no emissions data reports will be accepted, and no CAIR SO_2 Allowance Tracking System account will be established for a CAIR SO_2 unit at a source, until the Administrator has received a complete certificate of representation under § 97.213 for a CAIR designated representative of the source and the CAIR SO_2 units at the source.

(e)(1) Each submission under the CAIR SO_2 Trading Program shall be submitted, signed, and certified by the CAIR designated representative for each CAIR SO_2 source on behalf of which the submission is made. Each such submission shall include the following certification statement by the

CAIR designated representative: ''I am authorized to make this submission on behalf of the owners and operators of the source or units for which the submission is made. I certify under penalty of law that I have personally examined, and am familiar with, the statements and information submitted in this document and all its attachments. Based on my inquiry of those individuals with primary responsibility for obtaining the information, I certify that the statements and information are to the best of my knowledge and belief true, accurate, and complete. I am aware that there are significant penalties for submitting false statements and information or omitting required statements and information, including the possibility of fine or imprisonment.''

(2) The permitting authority and the Administrator will accept or act on a submission made on behalf of owner or operators of a CAIR SO_2 source or a CAIR SO_2 unit only if the submission has been made, signed, and certified in accordance with paragraph (e)(1) of this section.

§ 97.211 Alternate CAIR designated representative.

(a) A certificate of representation under § 97.213 may designate one and only one alternate CAIR designated representative, who may act on behalf of the CAIR designated representative. The agreement by which the alternate CAIR designated representative is selected shall include a procedure for authorizing the alternate CAIR designated representative to act in lieu of the CAIR designated representative.

(b) Upon receipt by the Administrator of a complete certificate of representation under § 97.213, any representation, action, inaction, or submission by the alternate CAIR designated representative shall be deemed to be a representation, action, inaction, or submission by the CAIR designated representative.

(c) Except in this section and §§ 97.202, 97.210(a) and (d), 97.212, 97.213, 97.215, 97.251 and 97.282, whenever the term ''CAIR designated representative'' is used in subparts AAA through III of this part, the term shall be construed to include the CAIR designated representative or any alternate CAIR designated representative.

§ 97.212 Changing CAIR designated representative and alternate CAIR designated representative; changes in owners and operators.

(a) *Changing CAIR designated representative.* The CAIR designated representative may be changed at any time upon receipt by the Administrator of a superseding complete certificate of representation under § 97.213. Notwithstanding any such change, all representations, actions, inactions, and submissions by the previous CAIR designated representative before the time and date when the Administrator receives the superseding certificate of representation shall be binding on the new CAIR designated representative and the owners and operators of the CAIR SO_2 source and the CAIR SO_2 units at the source.

(b) *Changing alternate CAIR designated representative.* The alternate CAIR designated representative may be changed at any time upon receipt by the Administrator of a superseding complete certificate of representation under § 97.213. Notwithstanding any such change, all representations, actions, inactions, and submissions by the previous alternate CAIR designated representative before the time and date when the Administrator receives the superseding certificate of representation shall be binding on the new alternate CAIR designated representative and the owners and operators of the CAIR SO_2 source and the CAIR SO_2 units at the source.

(c) *Changes in owners and operators.* (1) In the event an owner or operator of a CAIR SO_2 source or a CAIR SO_2 unit is not included in the list of owners and operators in the certificate of representation under § 97.213, such owner or operator shall be deemed to be subject to and bound by the certificate of representation, the representations, actions, inactions, and submissions of the CAIR designated representative and any alternate CAIR designated representative of the source or unit, and the decisions and orders of the permitting authority, the Administrator, or a court, as if the owner or operator were included in such list.

(2) Within 30 days following any change in the owners and operators of a CAIR SO_2 source or a CAIR SO_2 unit, including the addition of a new owner or operator, the CAIR designated representative or any alternate CAIR designated representative shall submit a revision to the certificate of representation under §97.213 amending the list of owners and operators to include the change.

§97.213 Certificate of representation.

(a) A complete certificate of representation for a CAIR designated representative or an alternate CAIR designated representative shall include the following elements in a format prescribed by the Administrator:

(1) Identification of the CAIR SO_2 source, and each CAIR SO_2 unit at the source, for which the certificate of representation is submitted, including identification and nameplate capacity of each generator served by each such unit.

(2) The name, address, e-mail address (if any), telephone number, and facsimile transmission number (if any) of the CAIR designated representative and any alternate CAIR designated representative.

(3) A list of the owners and operators of the CAIR SO_2 source and of each CAIR SO_2 unit at the source.

(4) The following certification statements by the CAIR designated representative and any alternate CAIR designated representative—

(i) ''I certify that I was selected as the CAIR designated representative or alternate CAIR designated representative, as applicable, by an agreement binding on the owners and operators of the source and each CAIR SO_2 unit at the source.''

(ii) ''I certify that I have all the necessary authority to carry out my duties and responsibilities under the CAIR SO_2 Trading Program on behalf of the owners and operators of the source and of each CAIR SO_2 unit at the source and that each such owner and operator shall be fully bound by my representations, actions, inactions, or submissions.''

(iii) ''I certify that the owners and operators of the source and of each CAIR SO_2 unit at the source shall be bound by any order issued to me by the Administrator, the permitting authority, or a court regarding the source or unit.''

(iv) ''Where there are multiple holders of a legal or equitable title to, or a leasehold interest in, a CAIR SO_2 unit, or where a utility or industrial customer purchases power from a CAIR SO_2 unit under a life-of-the-unit, firm power contractual arrangement, I certify that: I have given a written notice of my selection as the 'CAIR designated representative' or 'alternate CAIR designated representative', as applicable, and of the agreement by which I was selected to each owner and operator of the source and of each CAIR SO_2 unit at the source; and CAIR SO_2 allowances and proceeds of transactions involving CAIR SO_2 allowances will be deemed to be held or distributed in proportion to each holder's legal, equitable, leasehold, or contractual reservation or entitlement, except that, if such multiple holders have expressly provided for a different distribution of CAIR SO_2 allowances by contract, CAIR SO_2 allowances and proceeds of transactions involving CAIR SO_2 allowances will be deemed to be held or distributed in accordance with the contract.''

(5) The signature of the CAIR designated representative and any alternate CAIR designated representative and the dates signed.

(b) Unless otherwise required by the permitting authority or the Administrator, documents of agreement referred to in the certificate of representation shall not be submitted to the permitting authority or the Administrator. Neither the permitting authority nor the Administrator shall be under any obligation to review or evaluate the sufficiency of such documents, if submitted.

§97.214 Objections concerning CAIR designated representative.

(a) Once a complete certificate of representation under §97.213 has been submitted and received, the permitting authority and the Administrator will rely on the certificate of representation unless and until a superseding complete certificate of representation

under § 97.213 is received by the Administrator.

(b) Except as provided in § 97.212(a) or (b), no objection or other communication submitted to the permitting authority or the Administrator concerning the authorization, or any representation, action, inaction, or submission, of the CAIR designated representative shall affect any representation, action, inaction, or submission of the CAIR designated representative or the finality of any decision or order by the permitting authority or the Administrator under the CAIR SO_2 Trading Program.

(c) Neither the permitting authority nor the Administrator will adjudicate any private legal dispute concerning the authorization or any representation, action, inaction, or submission of any CAIR designated representative, including private legal disputes concerning the proceeds of CAIR SO_2 allowance transfers.

§ 97.215 Delegation by CAIR designated representative and alternate CAIR designated representative.

(a) A CAIR designated representative may delegate, to one or more natural persons, his or her authority to make an electronic submission to the Administrator provided for or required under this part.

(b) An alternate CAIR designated representative may delegate, to one or more natural persons, his or her authority to make an electronic submission to the Administrator provided for or required under this part.

(c) In order to delegate authority to make an electronic submission to the Administrator in accordance with paragraph (a) or (b) of this section, the CAIR designated representative or alternate CAIR designated representative, as appropriate, must submit to the Administrator a notice of delegation, in a format prescribed by the Administrator, that includes the following elements:

(1) The name, address, e-mail address, telephone number, and facsimile transmission number (if any) of such CAIR designated representative or alternate CAIR designated representative;

(2) The name, address, e-mail address, telephone number, and facsimile transmission number (if any) of each such natural person (referred to as an ''agent'');

(3) For each such natural person, a list of the type or types of electronic submissions under paragraph (a) or (b) of this section for which authority is delegated to him or her; and

(4) The following certification statements by such CAIR designated representative or alternate CAIR designated representative:

(i) ''I agree that any electronic submission to the Administrator that is by an agent identified in this notice of delegation and of a type listed for such agent in this notice of delegation and that is made when I am a CAIR designated representative or alternate CAIR designated representative, as appropriate, and before this notice of delegation is superseded by another notice of delegation under 40 CFR 97.215(d) shall be deemed to be an electronic submission by me.''

(ii) ''Until this notice of delegation is superseded by another notice of delegation under 40 CFR 97.215(d), I agree to maintain an e-mail account and to notify the Administrator immediately of any change in my e-mail address unless all delegation of authority by me under 40 CFR 97.215 is terminated.''.

(d) A notice of delegation submitted under paragraph (c) of this section shall be effective, with regard to the CAIR designated representative or alternate CAIR designated representative identified in such notice, upon receipt of such notice by the Administrator and until receipt by the Administrator of a superseding notice of delegation submitted by such CAIR designated representative or alternate CAIR designated representative, as appropriate. The superseding notice of delegation may replace any previously identified agent, add a new agent, or eliminate entirely any delegation of authority.

(e) Any electronic submission covered by the certification in paragraph

(c)(4)(i) of this section and made in accordance with a notice of delegation effective under paragraph (d) of this section shall be deemed to be an electronic submission by the CAIR designated representative or alternate CAIR designated representative submitting such notice of delegation.

Subpart CCC—Permits

§ 97.220 General CAIR SO_2 Trading Program permit requirements.

(a) For each CAIR SO_2 source required to have a title V operating permit or required, under subpart III of this part, to have a title V operating permit or other federally enforceable permit, such permit shall include a CAIR permit administered by the permitting authority for the title V operating permit or the federally enforceable permit as applicable. The CAIR portion of the title V permit or other federally enforceable permit as applicable shall be administered in accordance with the permitting authority's title V operating permits regulations promulgated under part 70 or 71 of this chapter or the permitting authority's regulations for other federally enforceable permits as applicable, except as provided otherwise by § 97.205, this subpart, and subpart III of this part.

(b) Each CAIR permit shall contain, with regard to the CAIR SO_2 source and the CAIR SO_2 units at the source covered by the CAIR permit, all applicable CAIR SO_2 Trading Program, CAIR NO_X Annual Trading Program, and CAIR NO_X Ozone Season Trading Program requirements and shall be a complete and separable portion of the title V operating permit or other federally enforceable permit under paragraph (a) of this section.

§ 97.221 Submission of CAIR permit applications.

(a) *Duty to apply*. The CAIR designated representative of any CAIR SO_2 source required to have a title V operating permit shall submit to the permitting authority a complete CAIR permit application under § 97.222 for the source covering each CAIR SO_2 unit at the source at least 18 months (or such lesser time provided by the permitting authority) before the later of January 1, 2010 or the date on which the CAIR SO_2 unit commences commercial operation, except as provided in § 97.283(a).

(b) *Duty to reapply*. For a CAIR SO_2 source required to have a title V operating permit, the CAIR designated representative shall submit a complete CAIR permit application under § 97.222 for the source covering each CAIR SO_2 unit at the source to renew the CAIR permit in accordance with the permitting authority's title V operating permits regulations addressing permit renewal, except as provided in § 97.283(b).

§ 97.222 Information requirements for CAIR permit applications.

A complete CAIR permit application shall include the following elements concerning the CAIR SO_2 source for which the application is submitted, in a format prescribed by the permitting authority:

(a) Identification of the CAIR SO_2 source;

(b) Identification of each CAIR SO_2 unit at the CAIR SO_2 source; and

(c) The standard requirements under § 97.206.

§ 97.223 CAIR permit contents and term.

(a) Each CAIR permit will contain, in a format prescribed by the permitting authority, all lements required for a complete CAIR permit application under § 97.222.

(b) Each CAIR permit is deemed to incorporate automatically the definitions of terms under § 97.202 and, upon recordation by the Administrator under subpart FFF, GGG, or III of this part, every allocation, transfer, or deduction of a CAIR SO_2 allowance to or from the compliance account of the CAIR SO_2 source covered by the permit.

(c) The term of the CAIR permit will be set by the permitting authority, as necessary to facilitate coordination of the renewal of the CAIR permit with issuance, revision, or renewal of the CAIR SO_2 source's title V operating permit or other federally enforceable permit as applicable.

§ 97.224 CAIR permit revisions.

Except as provided in § 97.223(b), the permitting authority will revise the

CAIR permit, as necessary, in accordance with the permitting authority's title V operating permits regulations or the permitting authority's regulations for other federally enforceable permits as applicable addressing permit revisions.

Subparts DDD—EEE [Reserved]

Subpart FFF—CAIR SO_2 Allowance Tracking System

§ 97.250 [Reserved]

§ 97.251 Establishment of accounts.

(a) *Compliance accounts.* Except as provided in § 97.284(e), upon receipt of a complete certificate of representation under § 97.213, the Administrator will establish a compliance account for the CAIR SO_2 source for which the certificate of representation was submitted, unless the source already has a compliance account.

(b) *General accounts*—(1) *Application for general account.* (i) Any person may apply to open a general account for the purpose of holding and transferring CAIR SO_2 allowances. An application for a general account may designate one and only one CAIR authorized account representative and one and only one alternate CAIR authorized account representative who may act on behalf of the CAIR authorized account representative. The agreement by which the alternate CAIR authorized account representative is selected shall include a procedure for authorizing the alternate CAIR authorized account representative to act in lieu of the CAIR authorized account representative.

(ii) A complete application for a general account shall be submitted to the Administrator and shall include the following elements in a format prescribed by the Administrator:

(A) Name, mailing address, e-mail address (if any), telephone number, and facsimile transmission number (if any) of the CAIR authorized account representative and any alternate CAIR authorized account representative;

(B) Organization name and type of organization, if applicable;

(C) A list of all persons subject to a binding agreement for the CAIR authorized account representative and any alternate CAIR authorized account representative to represent their ownership interest with respect to the CAIR SO_2 allowances held in the general account;

(D) The following certification statement by the CAIR authorized account representative and any alternate CAIR authorized account representative: "I certify that I was selected as the CAIR authorized account representative or the alternate CAIR authorized account representative, as applicable, by an agreement that is binding on all persons who have an ownership interest with respect to CAIR SO_2 allowances held in the general account. I certify that I have all the necessary authority to carry out my duties and responsibilities under the CAIR SO_2 Trading Program on behalf of such persons and that each such person shall be fully bound by my representations, actions, inactions, or submissions and by any order or decision issued to me by the Administrator or a court regarding the general account."

(E) The signature of the CAIR authorized account representative and any alternate CAIR authorized account representative and the dates signed.

(iii) Unless otherwise required by the permitting authority or the Administrator, documents of agreement referred to in the application for a general account shall not be submitted to the permitting authority or the Administrator. Neither the permitting authority nor the Administrator shall be under any obligation to review or evaluate the sufficiency of such documents, if submitted.

(2) *Authorization of CAIR authorized account representative and alternate CAIR authorized account representative.* (i) Upon receipt by the Administrator of a complete application for a general account under paragraph (b)(1) of this section:

(A) The Administrator will establish a general account for the person or persons for whom the application is submitted.

(B) The CAIR authorized account representative and any alternate CAIR authorized account representative for the general account shall represent and, by his or her representations, actions, inactions, or submissions, legally bind

each person who has an ownership interest with respect to CAIR SO_2 allowances held in the general account in all matters pertaining to the CAIR SO_2 Trading Program, notwithstanding any agreement between the CAIR authorized account representative or any alternate CAIR authorized account representative and such person. Any such person shall be bound by any order or decision issued to the CAIR authorized account representative or any alternate CAIR authorized account representative by the Administrator or a court regarding the general account.

(C) Any representation, action, inaction, or submission by any alternate CAIR authorized account representative shall be deemed to be a representation, action, inaction, or submission by the CAIR authorized account representative.

(ii) Each submission concerning the general account shall be submitted, signed, and certified by the CAIR authorized account representative or any alternate CAIR authorized account representative for the persons having an ownership interest with respect to CAIR SO_2 allowances held in the general account. Each such submission shall include the following certification statement by the CAIR authorized account representative or any alternate CAIR authorized account representative: ''I am authorized to make this submission on behalf of the persons having an ownership interest with respect to the CAIR SO_2 *allowances held in the general account*. I certify under penalty of law that I have personally examined, and am familiar with, the statements and information submitted in this document and all its attachments. Based on my inquiry of those individuals with primary responsibility for obtaining the information, I certify that the statements and information are to the best of my knowledge and belief true, accurate, and complete. I am aware that there are significant penalties for submitting false statements and information or omitting required statements and information, including the possibility of fine or imprisonment.''

(iii) The Administrator will accept or act on a submission concerning the general account only if the submission has been made, signed, and certified in accordance with paragraph (b)(2)(ii) of this section.

(3) *Changing CAIR authorized account representative and alternate CAIR authorized account representative; changes in persons with ownership interest*. (i) The CAIR authorized account representative for a general account may be changed at any time upon receipt by the Administrator of a superseding complete application for a general account under paragraph (b)(1) of this section. Notwithstanding any such change, all representations, actions, inactions, and submissions by the previous CAIR authorized account representative before the time and date when the Administrator receives the superseding application for a general account shall be binding on the new CAIR authorized account representative and the persons with an ownership interest with respect to the CAIR SO_2 allowances in the general account.

(ii) The alternate CAIR authorized account representative for a general account may be changed at any time upon receipt by the Administrator of a superseding complete application for a general account under paragraph (b)(1) of this section. Notwithstanding any such change, all representations, actions, inactions, and submissions by the previous alternate CAIR authorized account representative before the time and date when the Administrator receives the superseding application for a general account shall be binding on the new alternate CAIR authorized account representative and the persons with an ownership interest with respect to the CAIR SO_2 allowances in the general account.

(iii)(A) In the event a person having an ownership interest with respect to CAIR SO_2 allowances in the general account is not included in the list of such persons in the application for a general account, such person shall be deemed to be subject to and bound by the application for a general account, the representation, actions, inactions, and submissions of the CAIR authorized account representative and any alternate CAIR authorized account representative of the account, and the decisions and orders of the Administrator or a

court, as if the person were included in such list.

(B) Within 30 days following any change in the persons having an ownership interest with respect to CAIR SO_2 allowances in the general account, including the addition of a new person, the CAIR authorized account representative or any alternate CAIR authorized account representative shall submit a revision to the application for a general account amending the list of persons having an ownership interest with respect to the CAIR SO_2 allowances in the general account to include the change.

(4) *Objections concerning CAIR authorized account representative and alternate CAIR authorized account representative.* (i) Once a complete application for a general account under paragraph (b)(1) of this section has been submitted and received, the Administrator will rely on the application unless and until a superseding complete application for a general account under paragraph (b)(1) of this section is received by the Administrator.

(ii) Except as provided in paragraph (b)(3)(i) or (ii) of this section, no objection or other communication submitted to the Administrator concerning the authorization, or any representation, action, inaction, or submission of the CAIR authorized account representative or any alternate CAIR authorized account representative for a general account shall affect any representation, action, inaction, or submission of the CAIR authorized account representative or any alternate CAIR authorized account representative or the finality of any decision or order by the Administrator under the CAIR SO_2 Trading Program.

(iii) The Administrator will not adjudicate any private legal dispute concerning the authorization or any representation, action, inaction, or submission of the CAIR authorized account representative or any alternate CAIR authorized account representative for a general account, including private legal disputes concerning the proceeds of CAIR SO_2 allowance transfers.

(5) *Delegation by CAIR authorized account representative and alternate CAIR authorized account representative.* (i) A CAIR authorized account representative may delegate, to one or more natural persons, his or her authority to make an electronic submission to the Administrator provided for or required under subparts FFF and GGG of this part.

(ii) An alternate CAIR authorized account representative may delegate, to one or more natural persons, his or her authority to make an electronic submission to the Administrator provided for or required under subparts FFF and GGG of this part.

(iii) In order to delegate authority to make an electronic submission to the Administrator in accordance with paragraph (b)(5)(i) or (ii) of this section, the CAIR authorized account representative or alternate CAIR authorized account representative, as appropriate, must submit to the Administrator a notice of delegation, in a format prescribed by the Administrator, that includes the following elements:

(A) The name, address, e-mail address, telephone number, and facsimile transmission number (if any) of such CAIR authorized account representative or alternate CAIR authorized account representative;

(B) The name, address, e-mail address, telephone number, and, facsimile transmission number (if any) of each such natural person (referred to as an ''agent'');

(C) For each such natural person, a list of the type or types of electronic submissions under paragraph (b)(5)(i) or (ii) of this section for which authority is delegated to him or her;

(D) The following certification statement by such CAIR authorized account representative or alternate CAIR authorized account representative: ''I agree that any electronic submission to the Administrator that is by an agent identified in this notice of delegation and of a type listed for such agent in this notice of delegation and that is made when I am a CAIR authorized account representative or alternate CAIR authorized representative, as appropriate, and before this notice of delegation is superseded by another notice of delegation under 40 CFR 97.251(b)(5)(iv) shall be deemed to be an electronic submission by me.''; and

(E) The following certification statement by such CAIR authorized account representative or alternate CAIR authorized account representative: ''Until this notice of delegation is superseded by another notice of delegation under 40 CFR 97.251 (b)(5)(iv), I agree to maintain an e-mail account and to notify the Administrator immediately of any change in my e-mail address, unless all delegation of authority by me under 40 CFR 97.251 (b)(5) is terminated.''.

(iv) A notice of delegation submitted under paragraph (b)(5)(iii) of this section shall be effective, with regard to the CAIR authorized account representative or alternate CAIR authorized account representative identified in such notice, upon receipt of such notice by the Administrator and until receipt by the Administrator of a superseding notice of delegation submitted by such CAIR authorized account representative or alternate CAIR authorized account representative, as appropriate. The superseding notice of delegation may replace any previously identified agent, add a new agent, or eliminate entirely any delegation of authority.

(v) Any electronic submission covered by the certification in paragraph (b)(5)(iii)(D) of this section and made in accordance with a notice of delegation effective under paragraph (b)(5)(iv) of this section shall be deemed to be an electronic submission by the CAIR designated representative or alternate CAIR designated representative submitting such notice of delegation.

(c) *Account identification.* The Administrator will assign a unique identifying number to each account established under paragraph (a) or (b) of this section.

§ 97.252 Responsibilities of CAIR authorized account representative.

Following the establishment of a CAIR SO_2 Allowance Tracking System account, all submissions to the Administrator pertaining to the account, including, but not limited to, submissions concerning the deduction or transfer of CAIR SO_2 allowances in the account, shall be made only by the CAIR authorized account representative for the account.

§ 97.253 Recordation of CAIR SO_2 allowances.

(a)(1) After a compliance account is established under § 97.251(a) or § 73.31(a) or (b) of this chapter, the Administrator will record in the compliance account any CAIR SO_2 allowance allocated to any CAIR SO_2 unit at the source for each of the 30 years starting the later of 2010 or the year in which the compliance account is established and any CAIR SO_2 allowance allocated for each of the 30 years starting the later of 2010 or the year in which the compliance account is established and transferred to the source in accordance with subpart GGG of this part or subpart D of part 73 of this chapter.

(2) In 2011 and each year thereafter, after Administrator has completed all deductions under § 97.254(b), the Administrator will record in the compliance account any CAIR SO_2 allowance allocated to any CAIR SO_2 unit at the source for the new 30th year (*i.e.*, the year that is 30 years after the calendar year for which such deductions are or could be made) and any CAIR SO_2 allowance allocated for the new 30th year and transferred to the source in accordance with subpart GGG of this part or subpart D of part 73 of this chapter.

(b)(1) After a general account is established under § 97.251(b) or § 73.31(c) of this chapter, the Administrator will record in the general account any CAIR SO_2 allowance allocated for each of the 30 years starting the later of 2010 or the year in which the general account is established and transferred to the general account in accordance with subpart GGG of this part or subpart D of part 73 of this chapter.

(2) In 2011 and each year thereafter, after Administrator has completed all deductions under § 97.254(b), the Administrator will record in the general account any CAIR SO_2 allowance allocated for the new 30th year (*i.e.*, the year that is 30 years after the calendar year for which such deductions are or could be made) and transferred to the general account in accordance with subpart GGG of this part or subpart D of part 73 of this chapter.

(c) *Serial numbers for allocated CAIR SO_2 allowances.* When recording the allocation of CAIR SO_2 allowances issued by a permitting authority under

§ 97.288, the Administrator will assign each such CAIR SO_2 allowance a unique identification number that will include digits identifying the year of the control period for which the CAIR SO_2 allowance is allocated.

§ 97.254 Compliance with CAIR SO_2 emissions limitation.

(a) *Allowance transfer deadline.* The CAIR SO_2 allowances are available to be deducted for compliance with a source's CAIR SO_2 emissions limitation for a control period in a given calendar year only if the CAIR SO_2 allowances:

(1) Were allocated for the control period in the year or a prior year; and

(2) Are held in the compliance account as of the allowance transfer deadline for the control period or are transferred into the compliance account by a CAIR SO_2 allowance transfer correctly submitted for recordation under §§ 97.260 and 97.261 by the allowance transfer deadline for the control period.

(b) *Deductions for compliance.* Following the recordation, in accordance with § 97.261, of CAIR SO_2 allowance transfers submitted for recordation in a source's compliance account by the allowance transfer deadline for a control period, the Administrator will deduct from the compliance account CAIR SO_2 allowances available under paragraph (a) of this section in order to determine whether the source meets the CAIR SO_2 emissions limitation for the control period as follows:

(1) For a CAIR SO_2 source subject to an Acid Rain emissions limitation, the Administrator will, in the following order:

(i) Deduct the amount of CAIR SO_2 allowances, available under paragraph (a) of this section and not issued by a permitting authority under § 97.288, that is required under §§ 73.35(b) and (c) of this part. If there are sufficient CAIR SO_2 allowances to complete this deduction, the deduction will be treated as satisfying the requirements of §§ 73.35(b) and (c) of this chapter.

(ii) Deduct the amount of CAIR SO_2 allowances, not issued by a permitting authority under § 97.288, that is required under §§ 73.35(d) and 77.5 of this part. If there are sufficient CAIR SO_2 allowances to complete this deduction, the deduction will be treated as satisfying the requirements of §§ 73.35(d) and 77.5 of this chapter.

(iii) Treating the CAIR SO_2 allowances deducted under paragraph (b)(1)(i) of this section as also being deducted under this paragraph (b)(1)(iii), deduct CAIR SO_2 allowances available under paragraph (a) of this section (including any issued by a permitting authority under § 97.288) in order to determine whether the source meets the CAIR SO_2 emissions limitation for the control period, as follows:

(A) Until the tonnage equivalent of the CAIR SO_2 allowances deducted equals, or exceeds in accordance with paragraphs (c)(1) and (2) of this section, the number of tons of total sulfur dioxide emissions, determined in accordance with subpart HHH of this part, from all CAIR SO_2 units at the source for the control period; or

(B) If there are insufficient CAIR SO_2 allowances to complete the deductions in paragraph (b)(1)(iii)(A) of this section, until no more CAIR SO_2 allowances available under paragraph (a) of this section (including any issued by a permitting authority under § 97.288) remain in the compliance account.

(2) For a CAIR SO_2 source not subject to an Acid Rain emissions limitation, the Administrator will deduct CAIR SO_2 allowances available under paragraph (a) of this section (including any issued by a permitting authority under § 97.288) in order to determine whether the source meets the CAIR SO_2 emissions limitation for the control period, as follows:

(i) Until the tonnage equivalent of the CAIR SO_2 allowances deducted equals, or exceeds in accordance with paragraphs (c)(1) and (2) of this section, the number of tons of total sulfur dioxide emissions, determined in accordance with subpart HHH of this part, from all CAIR SO_2 units at the source for the control period; or

(ii) If there are insufficient CAIR SO_2 allowances to complete the deductions in paragraph (b)(2)(i) of this section, until no more CAIR SO_2 allowances available under paragraph (a) of this section (including any issued by a permitting authority under § 97.288) remain in the compliance account.

(c)(1) *Identification of CAIR SO_2 allowances by serial number.* The CAIR authorized account representative for a source's compliance account may request that specific CAIR SO_2 allowances, identified by serial number, in the compliance account be deducted for emissions or excess emissions for a control period in accordance with paragraph (b) or (d) of this section. Such request shall be submitted to the Administrator by the allowance transfer deadline for the control period and include, in a format prescribed by the Administrator, the identification of the CAIR SO_2 source and the appropriate serial numbers.

(2) *First-in, first-out.* The Administrator will deduct CAIR SO_2 allowances under paragraph (b) or (d) of this section from the source's compliance account, in the absence of an identification or in the case of a partial identification of CAIR SO_2 allowances by serial number under paragraph (c)(1) of this section, on a first-in, first-out (FIFO) accounting basis in the following order:

(i) Any CAIR SO_2 allowances that were allocated to the units at the source for a control period before 2010, in the order of recordation;

(ii) Any CAIR SO_2 allowances that were allocated to any entity for a control period before 2010 and transferred and recorded in the compliance account pursuant to subpart GGG of this part or subpart D of part 73 of this chapter, in the order of recordation;

(iii) Any CAIR SO_2 allowances that were allocated to the units at the source for a control period during 2010 through 2014, in the order of recordation;

(iv) Any CAIR SO_2 allowances that were allocated to any entity for a control period during 2010 through 2014 and transferred and recorded in the compliance account pursuant to subpart GGG of this part or subpart D of part 73 of this chapter, in the order of recordation;

(v) Any CAIR SO_2 allowances that were allocated to the units at the source for a control period in 2015 or later, in the order of recordation; and

(vi) Any CAIR SO_2 allowances that were allocated to any entity for a control period in 2015 or later and transferred and recorded in the compliance account pursuant to subpart GGG of this part or subpart D of part 73 of this chapter, in the order of recordation.

(d) *Deductions for excess emissions.* (1) After making the deductions for compliance under paragraph (b) of this section for a control period in a calendar year in which the CAIR SO_2 source has excess emissions, the Administrator will deduct from the source's compliance account the tonnage equivalent in CAIR SO_2 allowances, allocated for the control period in the immediately following calendar year (including any issued by a permitting authority under § 97.288), equal to, or exceeding in accordance with paragraphs (c)(1) and (2) of this section 3 times the following amount: the number of tons of the source's excess emissions minus, if the source is subject to an Acid Rain emissions limitation, the amount of the CAIR SO_2 allowances required to be deducted under paragraph (b)(1)(ii) of this section.

(2) Any allowance deduction required under paragraph (d)(1) of this section shall not affect the liability of the owners and operators of the CAIR SO_2 source or the CAIR SO_2 units at the source for any fine, penalty, or assessment, or their obligation to comply with any other remedy, for the same violations, as ordered under the Clean Air Act or applicable State law.

(e) *Recordation of deductions.* The Administrator will record in the appropriate compliance account all deductions from such an account under paragraphs (b) and (d) of this section and subpart III.

(f) *Administrator's action on submissions.* (1) The Administrator may review and conduct independent audits concerning any submission under the CAIR SO_2 Trading Program and make appropriate adjustments of the information in the submissions.

(2) The Administrator may deduct CAIR SO_2 allowances from or transfer CAIR SO_2 allowances to a source's compliance account based on the information in the submissions, as adjusted under paragraph (f)(1) of this section, and record such deductions and transfers.

§ 97.255 Banking.

(a) CAIR SO_2 allowances may be banked for future use or transfer in a compliance account or a general account in accordance with paragraph (b) of this section.

(b) Any CAIR SO_2 allowance that is held in a compliance account or a general account will remain in such account unless and until the CAIR SO_2 allowance is deducted or transferred under § 97.254, § 97.256, or subpart GGG or III of this part.

§ 97.256 Account error.

The Administrator may, at his or her sole discretion and on his or her own motion, correct any error in any CAIR SO_2 Allowance Tracking System account. Within 10 business days of making such correction, the Administrator will notify the CAIR authorized account representative for the account.

§ 97.257 Closing of general accounts.

(a) The CAIR authorized account representative of a general account may submit to the Administrator a request to close the account, which shall include a correctly submitted allowance transfer under §§ 97.260 and 97.261 for any CAIR SO_2 allowances in the account to one or more other CAIR SO_2 Allowance Tracking System accounts.

(b) If a general account has no allowance transfers in or out of the account for a 12-month period or longer and does not contain any CAIR SO_2 allowances, the Administrator may notify the CAIR authorized account representative for the account that the account will be closed following 20 business days after the notice is sent. The account will be closed after the 20-day period unless, before the end of the 20-day period, the Administrator receives a correctly submitted transfer of CAIR SO_2 allowances into the account under §§ 97.260 and 97.261 or a statement submitted by the CAIR authorized account representative demonstrating to the satisfaction of the Administrator good cause as to why the account should not be closed.

Subpart GGG—CAIR SO_2 Allowance Transfers

§ 97.260 Submission of CAIR SO_2 allowance transfers.

(a) A CAIR authorized account representative seeking recordation of a CAIR SO_2 allowance transfer shall submit the transfer to the Administrator. To be considered correctly submitted, the CAIR SO_2 allowance transfer shall include the following elements, in a format specified by the Administrator:

(1) The account numbers of both the transferor and transferee accounts;

(2) The serial number of each CAIR SO_2 allowance that is in the transferor account and is to be transferred; and

(3) The name and signature of the CAIR authorized account representatives of the transferor and transferee accounts and the dates signed.

(b)(1) The CAIR authorized account representative for the transferee account can meet the requirements in paragraph (a)(3) of this section by submitting, in a format prescribed by the Administrator, a statement signed by the CAIR authorized account representative and identifying each account into which any transfer of allowances, submitted on or after the date on which the Administrator receives such statement, is authorized. Such authorization shall be binding on any CAIR authorized account representative for such account and shall apply to all transfers into the account that are submitted on or after such date of receipt, unless and until the Administrator receives a statement signed by the CAIR authorized account representative retracting the authorization for the account.

(2) The statement under paragraph (b)(1) of this section shall include the following: ''By this signature I authorize any transfer of allowances into each account listed herein, except that I do not waive any remedies under State or Federal law to obtain correction of any erroneous transfers into such accounts. This authorization shall be binding on any CAIR authorized account representative for such account unless and until a statement signed by the CAIR

authorized account representative retracting this authorization for the account is received by the Administrator.''

§ 97.261 EPA recordation.

(a) Within 5 business days (except as necessary to perform a transfer in perpetuity of CAIR SO_2 allowances allocated to a CAIR SO_2 unit or as provided in paragraph (b) of this section) of receiving a CAIR SO_2 allowance transfer, the Administrator will record a CAIR SO_2 allowance transfer by moving each CAIR SO_2 allowance from the transferor account to the transferee account as specified by the request, provided that:

(1) The transfer is correctly submitted under § 97.260;

(2) The transferor account includes each CAIR SO_2 allowance identified by serial number in the transfer; and

(3) The transfer is in accordance with the limitation on transfer under § 74.42 of this chapter and § 74.47(c) of this chapter, as applicable.

(b) A CAIR SO_2 allowance transfer that is submitted for recordation after the allowance transfer deadline for a control period and that includes any CAIR SO_2 allowances allocated for any control period before such allowance transfer deadline will not be recorded until after the Administrator completes the deductions under § 97.254 for the control period immediately before such allowance transfer deadline.

(c) Where a CAIR SO_2 allowance transfer submitted for recordation fails to meet the requirements of paragraph (a) of this section, the Administrator will not record such transfer.

§ 97.262 Notification.

(a) *Notification of recordation.* Within 5 business days of recordation of a CAIR SO_2 allowance transfer under § 97.261, the Administrator will notify the CAIR authorized account representatives of both the transferor and transferee accounts.

(b) *Notification of non-recordation.* Within 10 business days of receipt of a CAIR SO_2 allowance transfer that fails to meet the requirements of § 97.261(a), the Administrator will notify the CAIR authorized account representatives of both accounts subject to the transfer of:

(1) A decision not to record the transfer, and

(2) The reasons for such non-recordation.

(c) Nothing in this section shall preclude the submission of a CAIR SO_2 allowance transfer for recordation following notification of non-recordation.

Subpart HHH—Monitoring and Reporting

§ 97.270 General requirements.

The owners and operators, and to the extent applicable, the CAIR designated representative, of a CAIR SO_2 unit, shall comply with the monitoring, recordkeeping, and reporting requirements as provided in this subpart and in subparts F and G of part 75 of this chapter. For purposes of complying with such requirements, the definitions in § 97.202 and in § 72.2 of this chapter shall apply, and the terms ''affected unit,'' ''designated representative,'' and ''continuous emission monitoring system'' (or ''CEMS'') in part 75 of this chapter shall be deemed to refer to the terms ''CAIR SO_2 unit,'' ''CAIR designated representative,'' and ''continuous emission monitoring system'' or (''CEMS'') respectively, as defined in § 97.202. The owner or operator of a unit that is not a CAIR SO_2 unit but that is monitored under § 75.16(b)(2) of this chapter shall comply with the same monitoring, recordkeeping, and reporting requirements as a CAIR SO_2 unit.

(a) *Requirements for installation, certification, and data accounting.* The owner or operator of each CAIR SO_2 unit shall:

(1) Install all monitoring systems required under this subpart for monitoring SO_2 mass emissions and individual unit heat input (including all systems required to monitor SO_2 concentration, stack gas moisture content, stack gas flow rate, CO_2 or O_2 concentration, and fuel flow rate, as applicable, in accordance with §§ 75.11 and 75.16 of this chapter);

(2) Successfully complete all certification tests required under § 97.271 and meet all other requirements of this subpart and part 75 of this chapter applicable to the monitoring systems

under paragraph (a)(1) of this section; and

(3) Record, report, and quality-assure the data from the monitoring systems under paragraph (a)(1) of this section.

(b) *Compliance deadlines.* Except as provided in paragraph (e) of this section, the owner or operator shall meet the monitoring system certification and other requirements of paragraphs (a)(1) and (2) of this section on or before the following dates. The owner or operator shall record, report, and quality-assure the data from the monitoring systems under paragraph (a)(1) of this section on and after the following dates.

(1) For the owner or operator of a CAIR SO_2 unit that commences commercial operation before July 1, 2008, by January 1, 2009.

(2) For the owner or operator of a CAIR SO_2 unit that commences commercial operation on or after July 1, 2008, by the later of the following dates:

(i) January 1, 2009; or

(ii) 90 unit operating days or 180 calendar days, whichever occurs first, after the date on which the unit commences commercial operation.

(3) For the owner or operator of a CAIR SO_2 unit for which construction of a new stack or flue or installation of add-on SO_2 emission controls is completed after the applicable deadline under paragraph (b)(1), (2), (4), or (5) of this section, by 90 unit operating days or 180 calendar days, whichever occurs first, after the date on which emissions first exit to the atmosphere through the new stack or flue or add-on SO_2 emissions controls.

(4) Notwithstanding the dates in paragraphs (b)(1) and (2) of this section, for the owner or operator of a unit for which a CAIR opt-in permit application is submitted and not withdrawn and a CAIR opt-in permit is not yet issued or denied under subpart III of this part, by the date specified in § 97.284(b).

(5) Notwithstanding the dates in paragraphs (b)(1) and (2) of this section, for the owner or operator of a CAIR SO_2 opt-in unit under subpart III of this part, by the date on which the CAIR SO_2 opt-in unit enters the CAIR SO_2 Trading Program as provided in § 97.284(g).

(c) *Reporting data.* The owner or operator of a CAIR SO_2 unit that does not meet the applicable compliance date set forth in paragraph (b) of this section for any monitoring system under paragraph (a)(1) of this section shall, for each such monitoring system, determine, record, and report maximum potential (or, as appropriate, minimum potential) values for SO_2 concentration, stack gas flow rate, stack gas moisture content, fuel flow rate, and any other parameters required to determine SO_2 mass emissions and heat input in accordance with § 75.31(b)(2) or (c)(3) of this chapter or section 2.4 of appendix D to part 75 of this chapter, as applicable.

(d) *Prohibitions.* (1) No owner or operator of a CAIR SO_2 unit shall use any alternative monitoring system, alternative reference method, or any other alternative to any requirement of this subpart without having obtained prior written approval in accordance with § 97.275.

(2) No owner or operator of a CAIR SO_2 unit shall operate the unit so as to discharge, or allow to be discharged, SO_2 emissions to the atmosphere without accounting for all such emissions in accordance with the applicable provisions of this subpart and part 75 of this chapter.

(3) No owner or operator of a CAIR SO_2 unit shall disrupt the continuous emission monitoring system, any portion thereof, or any other approved emission monitoring method, and thereby avoid monitoring and recording SO_2 mass emissions discharged into the atmosphere or heat input, except for periods of recertification or periods when calibration, quality assurance testing, or maintenance is performed in accordance with the applicable provisions of this subpart and part 75 of this chapter.

(4) No owner or operator of a CAIR SO_2 unit shall retire or permanently discontinue use of the continuous emission monitoring system, any component thereof, or any other approved monitoring system under this subpart, except under any one of the following circumstances:

(i) During the period that the unit is covered by an exemption under § 97.205 that is in effect;

(ii) The owner or operator is monitoring emissions from the unit with another certified monitoring system approved, in accordance with the applicable provisions of this subpart and part 75 of this chapter, by the Administrator for use at that unit that provides emission data for the same pollutant or parameter as the retired or discontinued monitoring system; or

(iii) The CAIR designated representative submits notification of the date of certification testing of a replacement monitoring system for the retired or discontinued monitoring system in accordance with § 97.271(d)(3)(i).

(e) *Long-term cold storage.* The owner or operator of a CAIR SO_2 unit is subject to the applicable provisions of part 75 of this chapter concerning units in long-term cold storage.

§ 97.271 Initial certification and recertification procedures.

(a) The owner or operator of a CAIR SO_2 unit shall be exempt from the initial certification requirements of this section for a monitoring system under § 97.270(a)(1) if the following conditions are met:

(1) The monitoring system has been previously certified in accordance with part 75 of this chapter; and

(2) The applicable quality-assurance and quality-control requirements of § 75.21 of this chapter and appendix B and appendix D to part 75 of this chapter are fully met for the certified monitoring system described in paragraph (a)(1) of this section.

(b) The recertification provisions of this section shall apply to a monitoring system under § 97.270(a)(1) exempt from initial certification requirements under paragraph (a) of this section.

(c) [Reserved]

(d) Except as provided in paragraph (a) of this section, the owner or operator of a CAIR SO_2 unit shall comply with the following initial certification and recertification procedures, for a continuous monitoring system (*i.e.*, a continuous emission monitoring system and an excepted monitoring system under appendix D to part 75 of this chapter) under § 97.270(a)(1). The owner or operator of a unit that qualifies to use the low mass emissions excepted monitoring methodology under § 75.19 of this chapter or that qualifies to use an alternative monitoring system under subpart E of part 75 of this chapter shall comply with the procedures in paragraph (e) or (f) of this section respectively.

(1) *Requirements for initial certification.* The owner or operator shall ensure that each continuous monitoring system under § 97.270(a)(1) (including the automated data acquisition and handling system) successfully completes all of the initial certification testing required under § 75.20 of this chapter by the applicable deadline in § 97.270(b). In addition, whenever the owner or operator installs a monitoring system to meet the requirements of this subpart in a location where no such monitoring system was previously installed, initial certification in accordance with § 75.20 of this chapter is required.

(2) *Requirements for recertification.* Whenever the owner or operator makes a replacement, modification, or change in any certified continuous emission monitoring system under § 97.270(a)(1) that may significantly affect the ability of the system to accurately measure or record SO_2 mass emissions or heat input rate or to meet the quality-assurance and quality-control requirements of § 75.21 of this chapter or appendix B to part 75 of this chapter, the owner or operator shall recertify the monitoring system in accordance with § 75.20(b) of this chapter. Furthermore, whenever the owner or operator makes a replacement, modification, or change to the flue gas handling system or the unit's operation that may significantly change the stack flow or concentration profile, the owner or operator shall recertify each continuous emission monitoring system whose accuracy is potentially affected by the change, in accordance with § 75.20(b) of this chapter. Examples of changes to a continuous emission monitoring system that require recertification include: replacement of the analyzer, complete replacement of an existing continuous emission monitoring system, or change in location or orientation of the sampling probe or site. Any fuel flowmeter system under § 97.270(a)(1) is subject to the recertification requirements in § 75.20(g)(6) of this chapter.

(3) *Approval process for initial certification and recertification.* Paragraphs (d)(3)(i) through (iv) of this section apply to both initial certification and recertification of a continuous monitoring system under § 97.270(a)(1). For recertifications, replace the words ''certification'' and ''initial certification'' with the word ''recertification'', replace the word ''certified'' with the word ''recertified,'' and follow the procedures in §§ 75.20(b)(5) and (g)(7) of this chapter in lieu of the procedures in paragraph (d)(3)(v) of this section.

(i) *Notification of certification.* The CAIR designated representative shall submit to the appropriate EPA Regional Office and the Administrator written notice of the dates of certification testing, in accordance with § 97.273.

(ii) *Certification application.* The CAIR designated representative shall submit to the Administrator a certification application for each monitoring system. A complete certification application shall include the information specified in § 75.63 of this chapter.

(iii) *Provisional certification date.* The provisional certification date for a monitoring system shall be determined in accordance with § 75.20(a)(3) of this chapter. A provisionally certified monitoring system may be used under the CAIR SO_2 Trading Program for a period not to exceed 120 days after receipt by the Administrator of the complete certification application for the monitoring system under paragraph (d)(3)(ii) of this section. Data measured and recorded by the provisionally certified monitoring system, in accordance with the requirements of part 75 of this chapter, will be considered valid quality-assured data (retroactive to the date and time of provisional certification), provided that the Administrator does not invalidate the provisional certification by issuing a notice of disapproval within 120 days of the date of receipt of the complete certification application by the Administrator.

(iv) *Certification application approval process.* The Administrator will issue a written notice of approval or disapproval of the certification application to the owner or operator within 120 days of receipt of the complete certification application under paragraph (d)(3)(ii) of this section. In the event the Administrator does not issue such a notice within such 120-day period, each monitoring system that meets the applicable performance requirements of part 75 of this chapter and is included in the certification application will be deemed certified for use under the CAIR SO_2 Trading Program.

(A) *Approval notice.* If the certification application is complete and shows that each monitoring system meets the applicable performance requirements of part 75 of this chapter, then the Administrator will issue a written notice of approval of the certification application within 120 days of receipt.

(B) *Incomplete application notice.* If the certification application is not complete, then the Administrator will issue a written notice of incompleteness that sets a reasonable date by which the CAIR designated representative must submit the additional information required to complete the certification application. If the CAIR designated representative does not comply with the notice of incompleteness by the specified date, then the Administrator may issue a notice of disapproval under paragraph (d)(3)(iv)(C) of this section. The 120-day review period shall not begin before receipt of a complete certification application.

(C) *Disapproval notice.* If the certification application shows that any monitoring system does not meet the performance requirements of part 75 of this chapter or if the certification application is incomplete and the requirement for disapproval under paragraph (d)(3)(iv)(B) of this section is met, then the Administrator will issue a written notice of disapproval of the certification application. Upon issuance of such notice of disapproval, the provisional certification is invalidated by the Administrator and the data measured and recorded by each uncertified monitoring system shall not be considered valid quality-assured data beginning with the date and hour of provisional certification (as defined under § 75.20(a)(3) of this chapter). The owner or operator shall follow the procedures for loss of certification in paragraph (d)(3)(v) of this section for each

monitoring system that is disapproved for initial certification.

(D) *Audit decertification*. The Administrator may issue a notice of disapproval of the certification status of a monitor in accordance with § 97.272(b).

(v) *Procedures for loss of certification*. If the Administrator issues a notice of disapproval of a certification application under paragraph (d)(3)(iv)(C) of this section or a notice of disapproval of certification status under paragraph (d)(3)(iv)(D) of this section, then:

(A) The owner or operator shall substitute the following values, for each disapproved monitoring system, for each hour of unit operation during the period of invalid data specified under § 75.20(a)(4)(iii), § 75.20(g)(7), or § 75.21(e) of this chapter and continuing until the applicable date and hour specified under § 75.20(a)(5)(i) or (g)(7) of this chapter:

(*1*) For a disapproved SO_2 pollutant concentration monitor and disapproved flow monitor, respectively, the maximum potential concentration of SO_2 and the maximum potential flow rate, as defined in sections 2.1.1.1 and 2.1.4.1 of appendix A to part 75 of this chapter.

(*2*) For a disapproved moisture monitoring system and disapproved diluent gas monitoring system, respectively, the minimum potential moisture percentage and either the maximum potential CO_2 concentration or the minimum potential O_2 concentration (as applicable), as defined in sections 2.1.5, 2.1.3.1, and 2.1.3.2 of appendix A to part 75 of this chapter.

(*3*) For a disapproved fuel flowmeter system, the maximum potential fuel flow rate, as defined in section 2.4.2.1 of appendix D to part 75 of this chapter.

(B) The CAIR designated representative shall submit a notification of certification retest dates and a new certification application in accordance with paragraphs (d)(3)(i) and (ii) of this section.

(C) The owner or operator shall repeat all certification tests or other requirements that were failed by the monitoring system, as indicated in the Administrator's notice of disapproval, no later than 30 unit operating days after the date of issuance of the notice of disapproval.

(e) *Initial certification and recertification procedures for units using the low mass emission excepted methodology under § 75.19 of this chapter*. The owner or operator of a unit qualified to use the low mass emissions (LME) excepted methodology under § 75.19 of this chapter shall meet the applicable certification and recertification requirements in §§ 75.19(a)(2) and 75.20(h) of this chapter. If the owner or operator of such a unit elects to certify a fuel flowmeter system for heat input determination, the owner or operator shall also meet the certification and recertification requirements in § 75.20(g) of this chapter.

(f) *Certification/recertification procedures for alternative monitoring systems*. The CAIR designated representative of each unit for which the owner or operator intends to use an alternative monitoring system approved by the Administrator under subpart E of part 75 of this chapter shall comply with the applicable notification and application procedures of § 75.20(f) of this chapter.

§ 97.272 Out of control periods.

(a) Whenever any monitoring system fails to meet the quality-assurance and quality-control requirements or data validation requirements of part 75 of this chapter, data shall be substituted using the applicable missing data procedures in subpart D of appendix D to part 75 of this chapter.

(b) *Audit decertification*. Whenever both an audit of a monitoring system and a review of the initial certification or recertification application reveal that any monitoring system should not have been certified or recertified because it did not meet a particular performance specification or other requirement under § 97.271 or the applicable provisions of part 75 of this chapter, both at the time of the initial certification or recertification application submission and at the time of the audit, the Administrator will issue a notice of disapproval of the certification status of such monitoring system. For the purposes of this paragraph, an audit shall be either a field audit or an audit of any information submitted to the permitting authority or the Administrator. By issuing the

notice of disapproval, the Administrator revokes prospectively the certification status of the monitoring system. The data measured and recorded by the monitoring system shall not be considered valid quality-assured data from the date of issuance of the notification of the revoked certification status until the date and time that the owner or operator completes subsequently approved initial certification or recertification tests for the monitoring system. The owner or operator shall follow the applicable initial certification or recertification procedures in § 97.271 for each disapproved monitoring system.

§ 97.273 Notifications.

The CAIR designated representative for a CAIR SO_2 unit shall submit written notice to the Administrator in accordance with § 75.61 of this chapter.

§ 97.274 Recordkeeping and reporting.

(a) *General provisions.* The CAIR designated representative shall comply with all recordkeeping and reporting requirements in this section, the applicable recordkeeping and reporting requirements in subparts F and G of part 75 of this chapter, and the requirements of § 97.210(e)(1).

(b) *Monitoring Plans.* The owner or operator of a CAIR SO_2 unit shall comply with requirements of § 75.62 of this chapter and, for a unit for which a CAIR opt-in permit application is submitted and not withdrawn and a CAIR opt-in permit is not yet issued or denied under subpart III of this part, §§ 97.283 and 97.284(a).

(c) *Certification Applications.* The CAIR designated representative shall submit an application to the Administrator within 45 days after completing all initial certification or recertification tests required under § 97.271, including the information required under § 75.63 of this chapter.

(d) *Quarterly reports.* The CAIR designated representative shall submit quarterly reports, as follows:

(1) The CAIR designated representative shall report the SO_2 mass emissions data and heat input data for the CAIR SO_2 unit, in an electronic quarterly report in a format prescribed by the Administrator, for each calendar quarter beginning with:

(i) For a unit that commences commercial operation before July 1, 2008, the calendar quarter covering January 1, 2009 through March 31, 2009;

(ii) For a unit that commences commercial operation on or after July 1, 2008, the calendar quarter corresponding to the earlier of the date of provisional certification or the applicable deadline for initial certification under § 97.270(b), unless that quarter is the third or fourth quarter of 2008, in which case reporting shall commence in the quarter covering January 1, 2009 through March 31, 2009;

(iii) Notwithstanding paragraphs (d)(1)(i) and (ii) of this section, for a unit for which a CAIR opt-in permit application is submitted and not withdrawn and a CAIR opt-in permit is not yet issued or denied under subpart III of this part, the calendar quarter corresponding to the date specified in § 97.284(b); and

(iv) Notwithstanding paragraphs (d)(1)(i) and (ii) of this section, for a CAIR SO_2 opt-in unit under subpart III of this part, the calendar quarter corresponding to the date on which the CAIR SO_2 opt-in unit enters the CAIR SO_2 Trading Program as provided in § 97.284(g).

(2) The CAIR designated representative shall submit each quarterly report to the Administrator within 30 days following the end of the calendar quarter covered by the report. Quarterly reports shall be submitted in the manner specified in § 75.64 of this chapter.

(3) For CAIR SO_2 units that are also subject to an Acid Rain emissions limitation or the CAIR NO_X Annual Trading Program, CAIR NO_X Ozone Season Trading Program, or Hg Budget Trading Program, quarterly reports shall include the applicable data and information required by subparts F through I of part 75 of this chapter as applicable, in addition to the SO_2 mass emission data, heat input data, and other information required by this subpart.

(e) *Compliance certification.* The CAIR designated representative shall submit to the Administrator a compliance certification (in a format prescribed by the Administrator) in support of each quarterly report based on reasonable inquiry of those persons with primary responsibility for ensuring that all of

the unit's emissions are correctly and fully monitored. The certification shall state that:

(1) The monitoring data submitted were recorded in accordance with the applicable requirements of this subpart and part 75 of this chapter, including the quality assurance procedures and specifications; and

(2) For a unit with add-on SO_2 emission controls and for all hours where SO_2 data are substituted in accordance with § 75.34(a)(1) of this chapter, the add-on emission controls were operating within the range of parameters listed in the quality assurance/quality control program under appendix B to part 75 of this chapter and the substitute data values do not systematically underestimate SO_2 emissions.

§ 97.275 Petitions.

The CAIR designated representative of a CAIR SO_2 unit may submit a petition under § 75.66 of this chapter to the Administrator requesting approval to apply an alternative to any requirement of this subpart. Application of an alternative to any requirement of this subpart is in accordance with this subpart only to the extent that the petition is approved in writing by the Administrator, in consultation with the permitting authority.

Subpart III—CAIR SO_2 Opt-in Units

§ 97.280 Applicability.

A CAIR SO_2 opt-in unit must be a unit that:

(a) Is located in a State that submits, and for which the Administrator approves, a State implementation plan revision in accordance with § 51.124(r)(1), (2), or (3) of this chapter establishing procedures concerning CAIR opt-in units;

(b) Is not a CAIR SO_2 unit under § 97.204 and is not covered by a retired unit exemption under § 97.205 that is in effect;

(c) Is not covered by a retired unit exemption under § 72.8 of this chapter that is in effect and is not an opt-in source under part 74 of this chapter;

(d) Has or is required or qualified to have a title V operating permit or other federally enforceable permit; and

(e) Vents all of its emissions to a stack and can meet the monitoring, recordkeeping, and reporting requirements of subpart HH of this part.

§ 97.281 General.

(a) Except as otherwise provided in §§ 97.201 through 97.204, §§ 97.206 through 97.208, and subparts BBB and CCC and subparts FFF through HHH of this part, a CAIR SO_2 opt-in unit shall be treated as a CAIR SO_2 unit for purposes of applying such sections and subparts of this part.

(b) Solely for purposes of applying, as provided in this subpart, the requirements of subpart HHH of this part to a unit for which a CAIR opt-in permit application is submitted and not withdrawn and a CAIR opt-in permit is not yet issued or denied under this subpart, such unit shall be treated as a CAIR SO_2 unit before issuance of a CAIR opt-in permit for such unit.

§ 97.282 CAIR designated representative.

Any CAIR SO_2 opt-in unit, and any unit for which a CAIR opt-in permit application is submitted and not withdrawn and a CAIR opt-in permit is not yet issued or denied under this subpart, located at the same source as one or more CAIR SO_2 units shall have the same CAIR designated representative and alternate CAIR designated representative as such CAIR SO_2 units.

§ 97.283 Applying for CAIR opt-in permit.

(a) *Applying for initial CAIR opt-in permit.* The CAIR designated representative of a unit meeting the requirements for a CAIR SO_2 opt-in unit in § 97.280 may apply for an initial CAIR opt-in permit at any time, except as provided under § 97.286(f) and (g), and, in order to apply, must submit the following:

(1) A complete CAIR permit application under § 97.222;

(2) A certification, in a format specified by the permitting authority, that the unit:

(i) Is not a CAIR SO_2 unit under § 97.204 and is not covered by a retired unit exemption under § 97.205 that is in effect;

(ii) Is not covered by a retired unit exemption under § 72.8 of this chapter that is in effect;

(iii) Is not and, so long as the unit is a CAIR SO_2 opt-in unit, will not become, an opt-in source under part 74 of this chapter;

(iv) Vents all of its emissions to a stack; and

(v) Has documented heat input for more than 876 hours during the 6 months immediately preceding submission of the CAIR permit application under § 97.222;

(3) A monitoring plan in accordance with subpart HHH of this part;

(4) A complete certificate of representation under § 97.213 consistent with § 97.282, if no CAIR designated representative has been previously designated for the source that includes the unit; and

(5) A statement, in a format specified by the permitting authority, whether the CAIR designated representative requests that the unit be allocated CAIR SO_2 allowances under § 97.288(b) or § 97.288(c) (subject to the conditions in §§ 97.284(h) and 97.286(g)), to the extent such allocation is provided in a State implementation plan revision submitted in accordance with § 51.124(r)(1), (2), or (3) of this chapter and approved by the Administrator. If allocation under § 97.288(c) is requested, this statement shall include a statement that the owners and operators of the unit intend to repower the unit before January 1, 2015 and that they will provide, upon request, documentation demonstrating such intent.

(b) *Duty to reapply*. (1) The CAIR designated representative of a CAIR SO_2 opt-in unit shall submit a complete CAIR permit application under § 97.222 to renew the CAIR opt-in unit permit in accordance with the permitting authority's regulations for title V operating permits, or the permitting authority's regulations for other federally enforceable permits if applicable, addressing permit renewal.

(2) Unless the permitting authority issues a notification of acceptance of withdrawal of the CAIR SO_2 opt-in unit from the CAIR SO_2 Trading Program in accordance with § 97.286 or the unit becomes a CAIR SO_2 unit under § 97.204, the CAIR SO_2 opt-in unit shall remain subject to the requirements for a CAIR SO_2 opt-in unit, even if the CAIR designated representative for the CAIR SO_2 opt-in unit fails to submit a CAIR permit application that is required for renewal of the CAIR opt-in permit under paragraph (b)(1) of this section.

[65 FR 2727, Jan 18, 2000, as amended by 71 FR 74795, Dec. 13, 2006]

§ 97.284 Opt-in process.

The permitting authority will issue or deny a CAIR opt-in permit for a unit for which an initial application for a CAIR opt-in permit under § 97.183 is submitted in accordance with the following, to the extent provided in a State implementation plan revision submitted in accordance with § 51.124(r)(1), (2), or (3) of this chapter and approved by the Administrator:

(a) *Interim review of monitoring plan*. The permitting authority and the Administrator will determine, on an interim basis, the sufficiency of the monitoring plan accompanying the initial application for a CAIR opt-in permit under § 97.283. A monitoring plan is sufficient, for purposes of interim review, if the plan appears to contain information demonstrating that the SO_2 emissions rate and heat input of the unit and all other applicable parameters are monitored and reported in accordance with subpart HHH of this part. A determination of sufficiency shall not be construed as acceptance or approval of the monitoring plan.

(b) *Monitoring and reporting*. (1)(i) If the permitting authority and the Administrator determine that the monitoring plan is sufficient under paragraph (a) of this section, the owner or operator shall monitor and report the SO_2 emissions rate and the heat input of the unit and all other applicable parameters, in accordance with subpart HHH of this part, starting on the date of certification of the appropriate monitoring systems under subpart HHH of this part and continuing until a CAIR opt-in permit is denied under § 97.284(f) or, if a CAIR opt-in permit is issued, the date and time when the unit is withdrawn from the CAIR SO_2 Trading Program in accordance with § 97.286.

(ii) The monitoring and reporting under paragraph (b)(1)(i) of this section shall include the entire control period

immediately before the date on which the unit enters the CAIR SO_2 Trading Program under § 97.284(g), during which period monitoring system availability must not be less than 90 percent under subpart HHH of this part and the unit must be in full compliance with any applicable State or Federal emissions or emissions-related requirements.

(2) To the extent the SO_2 emissions rate and the heat input of the unit are monitored and reported in accordance with subpart HHH of this part for one or more control periods, in addition to the control period under paragraph (b)(1)(ii) of this section, during which control periods monitoring system availability is not less than 90 percent under subpart HHH of this part and the unit is in full compliance with any applicable State or Federal emissions or emissions-related requirements and which control periods begin not more than 3 years before the unit enters the CAIR SO_2 Trading Program under § 97.284(g), such information shall be used as provided in paragraphs (c) and (d) of this section.

(c) *Baseline heat input*. The unit's baseline heat input shall equal:

(1) If the unit's SO_2 emissions rate and heat input are monitored and reported for only one control period, in accordance with paragraph (b)(1) of this section, the unit's total heat input (in mmBtu) for the control period; or

(2) If the unit's SO_2 emissions rate and heat input are monitored and reported for more than one control period, in accordance with paragraphs (b)(1) and (2) of this section, the average of the amounts of the unit's total heat input (in mmBtu) for the control periods under paragraphs (b)(1)(ii) and (2) of this section.

(d) *Baseline SO_2 emission rate*. The unit's baseline SO_2 emission rate shall equal:

(1) If the unit's SO_2 emissions rate and heat input are monitored and reported for only one control period, in accordance with paragraph (b)(1) of this section, the unit's SO_2 emissions rate (in lb/mmBtu) for the control period;

(2) If the unit's SO_2 emissions rate and heat input are monitored and reported for more than one control period, in accordance with paragraphs (b)(1) and (2) of this section, and the unit does not have add-on SO_2 emission controls during any such control periods, the average of the amounts of the unit's SO_2 emissions rate (in lb/mmBtu) for the control periods under paragraphs (b)(1)(ii) and (2) of this section; or

(3) If the unit's SO_2 emissions rate and heat input are monitored and reported for more than one control period, in accordance with paragraphs (b)(1) and (2) of this section, and the unit has add-on SO_2 emission controls during any such control periods, the average of the amounts of the unit's SO_2 emissions rate (in lb/mmBtu) for such control periods during which the unit has add-on SO_2 emission controls.

(e) *Issuance of CAIR opt-in permit*. After calculating the baseline heat input and the baseline SO_2 emissions rate for the unit under paragraphs (c) and (d) of this section and if the permitting authority determines that the CAIR designated representative shows that the unit meets the requirements for a CAIR SO_2 opt-in unit in § 97.280 and meets the elements certified in § 97.283(a)(2), the permitting authority will issue a CAIR opt-in permit. The permitting authority will provide a copy of the CAIR opt-in permit to the Administrator, who will then establish a compliance account for the source that includes the CAIR SO_2 opt-in unit unless the source already has a compliance account.

(f) *Issuance of denial of CAIR opt-in permit*. Notwithstanding paragraphs (a) through (e) of this section, if at any time before issuance of a CAIR opt-in permit for the unit, the permitting authority determines that the CAIR designated representative fails to show that the unit meets the requirements for a CAIR SO_2 opt-in unit in § 97.280 or meets the elements certified in § 97.283(a)(2), the permitting authority will issue a denial of a CAIR opt-in permit for the unit.

(g) *Date of entry into CAIR SO_2 Trading Program*. A unit for which an initial CAIR opt-in permit is issued by the permitting authority shall become a CAIR SO_2 opt-in unit, and a CAIR SO_2 unit, as of the later of January 1, 2010 or January 1 of the first control period

during which such CAIR opt-in permit is issued.

(h) *Repowered CAIR SO_2 opt-in unit.* (1) If CAIR designated representative requests, and the permitting authority issues a CAIR opt-in permit providing for, allocation to a CAIR SO_2 opt-in unit of CAIR SO_2 allowances under § 97.288(c) and such unit is repowered after its date of entry into the CAIR SO_2 Trading Program under paragraph (g) of this section, the repowered unit shall be treated as a CAIR SO_2 opt-in unit replacing the original CAIR SO_2 opt-in unit, as of the date of start-up of the repowered unit's combustion chamber.

(2) Notwithstanding paragraphs (c) and (d) of this section, as of the date of start-up under paragraph (h)(1) of this section, the repowered unit shall be deemed to have the same date of commencement of operation, date of commencement of commercial operation, baseline heat input, and baseline SO_2 emission rate as the original CAIR SO_2 opt-in unit, and the original CAIR SO_2 opt-in unit shall no longer be treated as a CAIR SO_2 opt-in unit or a CAIR SO_2 unit.

[65 FR 2727, Jan. 18, 2000, as amended at 71 FR 74795, Dec. 13, 2006]

§ 97.285 CAIR opt-in permit contents.

(a) Each CAIR opt-in permit will contain:

(1) All elements required for a complete CAIR permit application under § 97.222;

(2) The certification in § 97.283(a)(2);

(3) The unit's baseline heat input under § 97.284(c);

(4) The unit's baseline SO_2 emission rate under § 97.284(d);

(5) A statement whether the unit is to be allocated CAIR SO_2 allowances under § 97.288(b) or § 97.288(c) (subject to the conditions in §§ 97.284(h) and 97.286(g));

(6) A statement that the unit may withdraw from the CAIR SO_2 Trading Program only in accordance with § 97.286; and

(7) A statement that the unit is subject to, and the owners and operators of the unit must comply with, the requirements of § 97.287.

(b) Each CAIR opt-in permit is deemed to incorporate automatically the definitions of terms under § 97.202 and, upon recordation by the Administrator under subpart FFF or GGG of this part or this subpart, every allocation, transfer, or deduction of CAIR SO_2 allowances to or from the compliance account of the source that includes a CAIR SO_2 opt-in unit covered by the CAIR opt-in permit.

(c) The CAIR opt-in permit shall be included, in a format specified by the permitting authority, in the CAIR permit for the source where the CAIR SO_2 opt-in unit is located and in a title V operating permit or other federally enforceable permit for the source.

§ 97.286 Withdrawal from CAIR SO_2 Trading Program.

Except as provided under paragraph (g) of this section, a CAIR SO_2 opt-in unit may withdraw from the CAIR SO_2 Trading Program, but only if the permitting authority issues a notification to the CAIR designated representative of the CAIR SO_2 opt-in unit of the acceptance of the withdrawal of the CAIR SO_2 opt-in unit in accordance with paragraph (d) of this section.

(a) *Requesting withdrawal.* In order to withdraw a CAIR SO_2 opt-in unit from the CAIR SO_2 Trading Program, the CAIR designated representative of the CAIR SO_2 opt-in unit shall submit to the permitting authority a request to withdraw effective as of midnight of December 31 of a specified calendar year, which date must be at least 4 years after December 31 of the year of entry into the CAIR SO_2 Trading Program under § 97.284(g). The request must be submitted no later than 90 days before the requested effective date of withdrawal.

(b) *Conditions for withdrawal.* Before a CAIR SO_2 opt-in unit covered by a request under paragraph (a) of this section may withdraw from the CAIR SO_2 Trading Program and the CAIR opt-in permit may be terminated under paragraph (e) of this section, the following conditions must be met:

(1) For the control period ending on the date on which the withdrawal is to be effective, the source that includes the CAIR SO_2 opt-in unit must meet the requirement to hold CAIR SO_2 allowances under § 97.206(c) and cannot have any excess emissions.

(2) After the requirement for withdrawal under paragraph (b)(1) of this section is met, the Administrator will deduct from the compliance account of the source that includes the CAIR SO_2 opt-in unit CAIR SO_2 allowances equal in amount to and allocated for the same or a prior control period as any CAIR SO_2 allowances allocated to the CAIR SO_2 opt-in unit under § 97.288 for any control period for which the withdrawal is to be effective. If there are no remaining CAIR SO_2 units at the source, the Administrator will close the compliance account, and the owners and operators of the CAIR SO_2 opt-in unit may submit a CAIR SO_2 allowance transfer for any remaining CAIR SO_2 allowances to another CAIR SO_2 Allowance Tracking System in accordance with subpart GGG of this part.

(c) *Notification*. (1) After the requirements for withdrawal under paragraphs (a) and (b) of this section are met (including deduction of the full amount of CAIR SO_2 allowances required), the permitting authority will issue a notification to the CAIR designated representative of the CAIR SO_2 opt-in unit of the acceptance of the withdrawal of the CAIR SO_2 opt-in unit as of midnight on December 31 of the calendar year for which the withdrawal was requested.

(2) If the requirements for withdrawal under paragraphs (a) and (b) of this section are not met, the permitting authority will issue a notification to the CAIR designated representative of the CAIR SO_2 opt-in unit that the CAIR SO_2 opt-in unit's request to withdraw is denied. Such CAIR SO_2 opt-in unit shall continue to be a CAIR SO_2 opt-in unit.

(d) *Permit amendment*. After the permitting authority issues a notification under paragraph (c)(1) of this section that the requirements for withdrawal have been met, the permitting authority will revise the CAIR permit covering the CAIR SO_2 opt-in unit to terminate the CAIR opt-in permit for such unit as of the effective date specified under paragraph (c)(1) of this section. The unit shall continue to be a CAIR SO_2 opt-in unit until the effective date of the termination and shall comply with all requirements under the CAIR SO_2 Trading Program concerning any control periods for which the unit is a CAIR SO_2 opt-in unit, even if such requirements arise or must be complied with after the withdrawal takes effect.

(e) *Reapplication upon failure to meet conditions of withdrawal*. If the permitting authority denies the CAIR SO_2 opt-in unit's request to withdraw, the CAIR designated representative may submit another request to withdraw in accordance with paragraphs (a) and (b) of this section.

(f) *Ability to reapply to the CAIR SO_2 Trading Program*. Once a CAIR SO_2 opt-in unit withdraws from the CAIR SO_2 Trading Program and its CAIR opt-in permit is terminated under this section, the CAIR designated representative may not submit another application for a CAIR opt-in permit under § 97.283 for such CAIR SO_2 opt-in unit before the date that is 4 years after the date on which the withdrawal became effective. Such new application for a CAIR opt-in permit will be treated as an initial application for a CAIR opt-in permit under § 97.284.

(g) *Inability to withdraw*. Notwithstanding paragraphs (a) through (f) of this section, a CAIR SO_2 opt-in unit shall not be eligible to withdraw from the CAIR SO_2 Trading Program if the CAIR designated representative of the CAIR SO_2 opt-in unit requests, and the permitting authority issues a CAIR opt-in permit providing for, allocation to the CAIR SO_2 opt-in unit of CAIR SO_2 allowances under § 97.288(c).

§ 97.287 Change in regulatory status.

(a) *Notification*. If a CAIR SO_2 opt-in unit becomes a CAIR SO_2 unit under § 97.204, then the CAIR designated representative shall notify in writing the permitting authority and the Administrator of such change in the CAIR SO_2 opt-in unit's regulatory status, within 30 days of such change.

(b) *Permitting authority's and Administrator's actions*. (1) If a CAIR SO_2 opt-in unit becomes a CAIR SO_2 unit under § 97.204, the permitting authority will revise the CAIR SO_2 opt-in unit's CAIR opt-in permit to meet the requirements of a CAIR permit under § 97.223, and remove the CAIR opt-in permit provisions, as of the date on which the CAIR SO_2 opt-in unit becomes a CAIR SO_2 unit under § 97.204.

(2)(i) The Administrator will deduct from the compliance account of the source that includes the CAIR SO_2 opt-in unit that becomes a CAIR SO_2 unit under § 97.204, CAIR SO_2 allowances equal in amount to and allocated for the same or a prior control period as:

(A) Any CAIR SO_2 allowances allocated to the CAIR SO_2 opt-in unit under § 97.288 for any control period after the date on which the CAIR SO_2 opt-in unit becomes a CAIR SO_2 unit under § 97.204; and

(B) If the date on which the CAIR SO_2 opt-in unit becomes a CAIR SO_2 unit under § 97.204 is not December 31, the CAIR SO_2 allowances allocated to the CAIR SO_2 opt-in unit under § 97.288 for the control period that includes the date on which the CAIR SO_2 opt-in unit becomes a CAIR SO_2 unit under § 97.204, multiplied by the ratio of the number of days, in the control period, starting with the date on which the CAIR SO_2 opt-in unit becomes a CAIR SO_2 unit under § 97.204 divided by the total number of days in the control period and rounded to the nearest whole allowance as appropriate.

(ii) The CAIR designated representative shall ensure that the compliance account of the source that includes the CAIR SO_2 opt-in unit that becomes a CAIR SO_2 unit under § 97.204 contains the CAIR SO_2 allowances necessary for completion of the deduction under paragraph (b)(2)(i) of this section.

[65 FR 2727, Jan. 18, 2000, as amended at 71 FR 74795, Dec. 13, 2006]

§ 97.288 CAIR SO_2 allowance allocations to CAIR SO_2 opt-in units.

(a) *Timing requirements.* (1) When the CAIR opt-in permit is issued under § 97.284(e), the permitting authority will allocate CAIR SO_2 allowances to the CAIR SO_2 opt-in unit, and submit to the Administrator the allocation for the control period in which a CAIR SO_2 opt-in unit enters the CAIR SO_2 Trading Program under § 97.284(g), in accordance with paragraph (b) or (c) of this section.

(2) By no later than October 31 of the control period after the control period in which a CAIR SO_2 opt-in unit enters the CAIR SO_2 Trading Program under § 97.284(g) and October 31 of each year thereafter, the permitting authority will allocate CAIR SO_2 allowances to the CAIR SO_2 opt-in unit, and submit to the Administrator the allocation for the control period that includes such submission deadline and in which the unit is a CAIR SO_2 opt-in unit, in accordance with paragraph (b) or (c) of this section.

(b) *Calculation of allocation.* For each control period for which a CAIR SO_2 opt-in unit is to be allocated CAIR SO_2 allowances, the permitting authority will allocate in accordance with the following procedures, if provided in a State implementation plan revision submitted in accordance with § 51.124(r)(1), (2), or (3) of this chapter and approved by the Administrator:

(1) The heat input (in mmBtu) used for calculating the CAIR SO_2 allowance allocation will be the lesser of:

(i) The CAIR SO_2 opt-in unit's baseline heat input determined under § 97.284(c); or

(ii) The CAIR SO_2 opt-in unit's heat input, as determined in accordance with subpart HHH of this part, for the immediately prior control period, except when the allocation is being calculated for the control period in which the CAIR SO_2 opt-in unit enters the CAIR SO_2 Trading Program under § 97.284(g).

(2) The SO_2 emission rate (in lb/mmBtu) used for calculating CAIR SO_2 allowance allocations will be the lesser of:

(i) The CAIR SO_2 opt-in unit's baseline SO_2 emissions rate (in lb/mmBtu) determined under § 97.284(d) and multiplied by 70 percent; or

(ii) The most stringent State or Federal SO_2 emissions limitation applicable to the CAIR SO_2 opt-in unit at any time during the control period for which CAIR SO_2 allowances are to be allocated.

(3) The permitting authority will allocate CAIR SO_2 allowances to the CAIR SO_2 opt-in unit with a tonnage equivalent equal to, or less than by the smallest possible amount, the heat input under paragraph (b)(1) of this section, multiplied by the SO_2 emission rate under paragraph (b)(2) of this section, and divided by 2,000 lb/ton.

(c) Notwithstanding paragraph (b) of this section and if the CAIR designated

representative requests, and the permitting authority issues a CAIR opt-in permit (based on a demonstration of the intent to repower stated under §97.283(a)(5)) providing for, allocation to a CAIR SO_2 opt-in unit of CAIR SO_2 allowances under this paragraph (subject to the conditions in §§97.284(h) and 97.286(g)), the permitting authority will allocate to the CAIR SO_2 opt-in unit as follows, if provided in a State implementation plan revision submitted in accordance with §51.124(r)(1), (2), or (3) of this chapter and approved by the Administrator:

(1) For each control period in 2010 through 2014 for which the CAIR SO_2 opt-in unit is to be allocated CAIR SO_2 allowances,

(i) The heat input (in mmBtu) used for calculating CAIR SO_2 allowance allocations will be determined as described in paragraph (b)(1) of this section.

(ii) The SO_2 emission rate (in lb/mmBtu) used for calculating CAIR SO_2 allowance allocations will be the lesser of:

(A) The CAIR SO_2 opt-in unit's baseline SO_2 emissions rate (in lb/mmBtu) determined under §97.284(d); or

(B) The most stringent State or Federal SO_2 emissions limitation applicable to the CAIR SO_2 opt-in unit at any time during the control period in which the CAIR SO_2 opt-in unit enters the CAIR SO_2 Trading Program under §97.284(g).

(iii) The permitting authority will allocate CAIR SO_2 allowances to the CAIR SO_2 opt-in unit with a tonnage equivalent equal to, or less than by the smallest possible amount, the heat input under paragraph (c)(1)(i) of this section, multiplied by the SO_2 emission rate under paragraph (c)(1)(ii) of this section, and divided by 2,000 lb/ton.

(2) For each control period in 2015 and thereafter for which the CAIR SO_2 opt-in unit is to be allocated CAIR SO_2 allowances,

(i) The heat input (in mmBtu) used for calculating the CAIR SO_2 allowance allocations will be determined as described in paragraph (b)(1) of this section.

(ii) The SO_2 emission rate (in lb/mmBtu) used for calculating the CAIR SO_2 allowance allocation will be the lesser of:

(A) The CAIR SO_2 opt-in unit's baseline SO_2 emissions rate (in lb/mmBtu) determined under §97.284(d) multiplied by 10 percent; or

(B) The most stringent State or Federal SO_2 emissions limitation applicable to the CAIR SO_2 opt-in unit at any time during the control period for which CAIR SO_2 allowances are to be allocated.

(iii) The permitting authority will allocate CAIR SO_2 allowances to the CAIR SO_2 opt-in unit with a tonnage equivalent equal to, or less than by the smallest possible amount, the heat input under paragraph (c)(2)(i) of this section, multiplied by the SO_2 emission rate under paragraph (c)(2)(ii) of this section, and divided by 2,000 lb/ton.

(d) *Recordation*. If provided in a State implementation plan revision submitted in accordance with §51.124(r)(1), (2), or (3) of this chapter and approved by the Administrator:

(1) The Administrator will record, in the compliance account of the source that includes the CAIR SO_2 opt-in unit, the CAIR SO_2 allowances allocated by the permitting authority to the CAIR SO_2 opt-in unit under paragraph (a)(1) of this section.

(2) By December 1 of the control period in which a CAIR SO_2 opt-in unit enters the CAIR SO_2 Trading Program under §97.284(g) and December 1 of each year thereafter, the Administrator will record, in the compliance account of the source that includes the CAIR SO_2 opt-in unit, the CAIR SO_2 allowances allocated by the permitting authority to the CAIR SO_2 opt-in unit under paragraph (a)(2) of this section.

APPENDIX A TO SUBPART III OF PART 97—STATES WITH APPROVED STATE IMPLEMENTATION PLAN REVISIONS CONCERNING CAIR SO_2 OPT-IN UNITS

1. The following States have State Implementation Plan revisions under §51.124(r) of this chapter approved by the Administrator and establishing procedures providing for CAIR SO_2 opt-in units under subpart III of this part and allocation of CAIR SO_2 allowances to such units under §97.288(b):

Indiana
North Carolina
Ohio

South Carolina
Tennessee

2. The following States have State Implementation Plan revisions under § 51.124(r) of this chapter approved by the Administrator and establishing procedures providing for CAIR SO_2 opt-in units under subpart III of this part and allocation of CAIR SO_2 allowances to such units under § 97.288(c):

Indiana
North Carolina
Ohio
South Carolina
Tennessee

[65 FR 2727, Jan. 18, 2000, as amended at 72 FR 46394, Aug. 20, 2007; 72 FR 56920, Oct. 5, 2007; 72 FR 57215, Oct. 9, 2007; 72 FR 59487, Oct. 22, 2007; 73 FR 6041, Feb. 1, 2008]

Subpart AAAA—CAIR NO_X Ozone Season Trading Program General Provisions

§ 97.301 Purpose.

This subpart and subparts BBBB through IIII set forth the general provisions and the designated representative, permitting, allowance, monitoring, and opt-in provisions for the Federal Clean Air Interstate Rule (CAIR) NO_X Ozone Season Trading Program, under section 110 of the Clean Air Act and § 52.35 of this chapter, as a means of mitigating interstate transport of ozone and nitrogen oxides.

§ 97.302 Definitions.

The terms used in this subpart and subparts BBBB through IIII shall have the meanings set forth in this section as follows:

Account number means the identification number given by the Administrator to each CAIR NO_X Ozone Season Allowance Tracking System account.

Acid Rain emissions limitation means a limitation on emissions of sulfur dioxide or nitrogen oxides under the Acid Rain Program.

Acid Rain Program means a multistate sulfur dioxide and nitrogen oxides air pollution control and emission reduction program established by the Administrator under title IV of the CAA and parts 72 through 78 of this chapter.

Administrator means the Administrator of the United States Environmental Protection Agency or the Administrator's duly authorized representative.

Allocate or *allocation* means, with regard to CAIR NO_X Ozone Season allowances, the determination by a permitting authority or the Administrator of the amount of such CAIR NO_X Ozone Season allowances to be initially credited to a CAIR NO_X Ozone Season unit, a new unit set-aside, or other entity.

Allowance transfer deadline means, for a control period, midnight of November 30 (if it is a business day), or midnight of the first business day thereafter (if November 30 is not a business day), immediately following the control period and is the deadline by which a CAIR NO_X Ozone Season allowance transfer must be submitted for recordation in a CAIR NO_X Ozone Season source's compliance account in order to be used to meet the source's CAIR NO_X Ozone Season emissions limitation for such control period in accordance with § 97.354.

Alternate CAIR designated representative means, for a CAIR NO_X Ozone Season source and each CAIR NO_X Ozone Season unit at the source, the natural person who is authorized by the owners and operators of the source and all such units at the source, in accordance with subparts BBBB and IIII of this part, to act on behalf of the CAIR designated representative in matters pertaining to the CAIR NO_X Ozone Season Trading Program. If the CAIR NO_X Ozone Season source is also a CAIR NO_X source, then this natural person shall be the same person as the alternate CAIR designated representative under the CAIR NO_X Annual Trading Program. If the CAIR NO_X Ozone Season source is also a CAIR SO_2 source, then this natural person shall be the same person as the alternate CAIR designated representative under the CAIR SO_2 Trading Program. If the CAIR NO_X Ozone Season source is also subject to the Acid Rain Program, then this natural person shall be the same person as the alternate designated representative under the Acid Rain Program. If the CAIR NO_X Ozone Season source is also subject to the Hg Budget Trading Program, then this natural person shall be the same person as the alternate Hg designated representative under the Hg Budget Trading Program.

Automated data acquisition and handling system or *DAHS* means that component of the continuous emission monitoring system, or other emissions monitoring system approved for use under subpart HHHH of this part, designed to interpret and convert individual output signals from pollutant concentration monitors, flow monitors, diluent gas monitors, and other component parts of the monitoring system to produce a continuous record of the measured parameters in the measurement units required by subpart HHHH of this part.

Biomass means—

(1) Any organic material grown for the purpose of being converted to energy;

(2) Any organic byproduct of agriculture that can be converted into energy; or

(3) Any material that can be converted into energy and is nonmerchantable for other purposes, that is segregated from other nonmerchantable material, and that is;

(i) A forest-related organic resource, including mill residues, precommercial thinnings, slash, brush, or byproduct from conversion of trees to merchantable material; or

(ii) A wood material, including pallets, crates, dunnage, manufacturing and construction materials (other than pressure-treated, chemically-treated, or painted wood products), and landscape or right-of-way tree trimmings.

Boiler means an enclosed fossil-or other-fuel-fired combustion device used to produce heat and to transfer heat to recirculating water, steam, or other medium.

Bottoming-cycle cogeneration unit means a cogeneration unit in which the energy input to the unit is first used to produce useful thermal energy and at least some of the reject heat from the useful thermal energy application or process is then used for electricity production.

CAIR authorized account representative means, with regard to a general account, a responsible natural person who is authorized, in accordance with subparts BBBB, FFFF, and IIII of this part, to transfer and otherwise dispose of CAIR NO_X Ozone Season allowances held in the general account and, with regard to a compliance account, the CAIR designated representative of the source.

CAIR designated representative means, for a CAIR NO_X Ozone Season source and each CAIR NO_X Ozone Season unit at the source, the natural person who is authorized by the owners and operators of the source and all such units at the source, in accordance with subparts BBBB and IIII of this part, to represent and legally bind each owner and operator in matters pertaining to the CAIR NO_X Ozone Season Trading Program. If the CAIR NO_X Ozone Season source is also a CAIR NO_X source, then this natural person shall be the same person as the CAIR designated representative under the CAIR NO_X Annual Trading Program. If the CAIR NO_X Ozone Season source is also a CAIR SO_2 source, then this natural person shall be the same person as the CAIR designated representative under the CAIR SO_2 Trading Program. If the CAIR NO_X Ozone Season source is also subject to the Acid Rain Program, then this natural person shall be the same person as the designated representative under the Acid Rain Program. If the CAIR NO_X Ozone Season source is also subject to the Hg Budget Trading Program, then this natural person shall be the same person as the Hg designated representative under the Hg Budget Trading Program.

CAIR NO_X Annual Trading Program means a multi-state nitrogen oxides air pollution control and emission reduction program established by the Administrator in accordance with subparts AA through II of this part and §§ 51.123(p) and 52.35 of this chapter or approved and administered by the Administrator in accordance with subparts AA through II of part 96 of this chapter and § 51.123(o)(1) or (2) of this chapter, as a means of mitigating interstate transport of fine particulates and nitrogen oxides.

CAIR NO_X Ozone Season allowance means a limited authorization issued by a permitting authority or the Administrator under subpart EEEE of this part, § 97.388, or provisions of a State implementation plan that are approved under § 51.123(aa)(1) or (2) (and (bb)(1)), (bb)(2), (dd), or (ee) of this chapter, to emit one ton of nitrogen

oxides during a control period of the specified calendar year for which the authorization is allocated or of any calendar year thereafter under the CAIR NO_X Ozone Season Trading Program or a limited authorization issued by a permitting authority for a control period during 2003 through 2008 under the NO_X Budget Trading Program in accordance with § 51.121(p) of this chapter to emit one ton of nitrogen oxides during a control period, provided that the provision in § 51.121(b)(2)(ii)(E) of this chapter shall not be used in applying this definition and the limited authorization shall not have been used to meet the allowance-holding requirement under the NO_X Budget Trading Program. An authorization to emit nitrogen oxides that is not issued under subpart EEEE of this part, § 97.388, or provisions of a State implementation plan that are approved under § 51.123(aa)(1) or (2) (and (bb)(1)), (bb)(2), (dd), or (ee) of this chapter or under the NO_X Budget Trading Program as described in the prior sentence shall not be a CAIR NO_X Ozone Season allowance.

CAIR NO_X Ozone Season allowance deduction or *deduct CAIR NO_X Ozone Season allowances* means the permanent withdrawal of CAIR NO_X Ozone Season allowances by the Administrator from a compliance account, *e.g.*, in order to account for a specified number of tons of total nitrogen oxides emissions from all CAIR NO_X Ozone Season units at a CAIR NO_X Ozone Season source for a control period, determined in accordance with subpart HHHH of this part, or to account for excess emissions.

CAIR NO_X Ozone Season Allowance Tracking System means the system by which the Administrator records allocations, deductions, and transfers of CAIR NO_X Ozone Season allowances under the CAIR NO_X Ozone Season Trading Program. Such allowances will be allocated, held, deducted, or transferred only as whole allowances.

CAIR NO_X Ozone Season Allowance Tracking System account means an account in the CAIR NO_X Ozone Season Allowance Tracking System established by the Administrator for purposes of recording the allocation, holding, transferring, or deducting of CAIR NO_X Ozone Season allowances.

CAIR NO_X Ozone Season allowances held or *hold CAIR NO_X Ozone Season allowances* means the CAIR NO_X Ozone Season allowances recorded by the Administrator, or submitted to the Administrator for recordation, in accordance with subparts FFFF, GGGG, and IIII of this part, in a CAIR NO_X Ozone Season Allowance Tracking System account.

CAIR NO_X Ozone Season emissions limitation means, for a CAIR NO_X Ozone Season source, the tonnage equivalent, in NO_X emissions in a control period, of the CAIR NO_X Ozone Season allowances available for deduction for the source under § 97.354(a) and (b) for the control period.

CAIR NO_X Ozone Season source means a source that includes one or more CAIR NO_X Ozone Season units.

CAIR NO_X Ozone Season Trading Program means a multi-state nitrogen oxides air pollution control and emission reduction program established by the Administrator in accordance with subparts AAAA through IIII of part 96 of this part and §§ 51.123(ee) and 52.35 of this chapter or approved and administered by the Administrator in accordance with under subparts AAAA through IIII and § 51.123(aa)(1) or (2) (and (bb)(1)), (bb)(2), or (dd) of this chapter, as a means of mitigating interstate transport of ozone and nitrogen oxides.

CAIR NO_X Ozone Season unit means a unit that is subject to the CAIR NO_X Ozone Season Trading Program under § 97.304 and, except for purposes of § 97.305 and subpart EEEE of this part, a CAIR NO_X Ozone Season opt-in unit under subpart IIII of this part.

CAIR NO_X source means a source that is subject to the CAIR NO_X Annual Trading Program.

CAIR permit means the legally binding and federally enforceable written document, or portion of such document, issued by the permitting authority under subpart CCCC of this part, including any permit revisions, specifying the CAIR NO_X Ozone Season Trading Program requirements applicable to a CAIR NO_X Ozone Season

source, to each CAIR NO_X Ozone Season unit at the source, and to the owners and operators and the CAIR designated representative of the source and each such unit.

CAIR SO_2 source means a source that is subject to the CAIR SO_2 Trading Program.

CAIR SO_2 Trading Program means a multi-state sulfur dioxide air pollution control and emission reduction program established by the Administrator in accordance with subparts AAA through III of this part and §§ 51.124(r) and 52.36 of this chapter or approved and administered by the Administrator in accordance with subparts AAA through III of part 96 of this chapter and § 51.124(o)(1) or (2) of this chapter, as a means of mitigating interstate transport of fine particulates and sulfur dioxide.

Certifying official means:

(1) For a corporation, a president, secretary, treasurer, or vice-president or the corporation in charge of a principal business function or any other person who performs similar policy or decision-making functions for the corporation;

(2) For a partnership or sole proprietorship, a general partner or the proprietor respectively; or

(3) For a local government entity or State, Federal, or other public agency, a principal executive officer or ranking elected official.

Clean Air Act or *CAA* means the Clean Air Act, 42 U.S.C. 7401, *et seq*.

Coal means any solid fuel classified as anthracite, bituminous, subbituminous, or lignite.

Coal-derived fuel means any fuel (whether in a solid, liquid, or gaseous state) produced by the mechanical, thermal, or chemical processing of coal.

Coal-fired means:

(1) Except for purposes of subpart EEEE of this part, combusting any amount of coal or coal-derived fuel, alone or in combination with any amount of any other fuel, during any year; or

(2) For purposes of subpart EEEE of this part, combusting any amount of coal or coal-derived fuel, alone or in combination with any amount of any other fuel, during a specified year.

Cogeneration unit means a stationary, fossil-fuel-fired boiler or stationary, fossil-fuel-fired combustion turbine:

(1) Having equipment used to produce electricity and useful thermal energy for industrial, commercial, heating, or cooling purposes through the sequential use of energy; and

(2) Producing during the 12-month period starting on the date the unit first produces electricity and during any calendar year after the calendar year in which the unit first produces electricity—

(i) For a topping-cycle cogeneration unit,

(A) Useful thermal energy not less than 5 percent of total energy output; and

(B) Useful power that, when added to one-half of useful thermal energy produced, is not less then 42.5 percent of total energy input, if useful thermal energy produced is 15 percent or more of total energy output, or not less than 45 percent of total energy input, if useful thermal energy produced is less than 15 percent of total energy output.

(ii) For a bottoming-cycle cogeneration unit, useful power not less than 45 percent of total energy input;

(3) Provided that the total energy input under paragraphs (2)(i)(B) and (2)(ii) of this definition shall equal the unit's total energy input from all fuel except biomass if the unit is a boiler.

Combustion turbine means:

(1) An enclosed device comprising a compressor, a combustor, and a turbine and in which the flue gas resulting from the combustion of fuel in the combustor passes through the turbine, rotating the turbine; and

(2) If the enclosed device under paragraph (1) of this definition is combined cycle, any associated duct burner, heat recovery steam generator, and steam turbine.

Commence commercial operation means, with regard to a unit:

(1) To have begun to produce steam, gas, or other heated medium used to generate electricity for sale or use, including test generation, except as provided in § 97.305 and § 97.384(h).

(i) For a unit that is a CAIR NO_X Ozone Season unit under § 97.304 on the later of November 15, 1990 or the date

the unit commences commercial operation as defined in paragraph (1) of this definition and that subsequently undergoes a physical change (other than replacement of the unit by a unit at the same source), such date shall remain the date of commencement of commercial operation of the unit, which shall continue to be treated as the same unit.

(ii) For a unit that is a CAIR NO_X Ozone Season unit under § 97.304 on the later of November 15, 1990 or the date the unit commences commercial operation as defined in paragraph (1) of this definition and that is subsequently replaced by a unit at the same source (*e.g.*, repowered), such date shall remain the replaced unit's date of commencement of commercial operation, and the replacement unit shall be treated as a separate unit with a separate date for commencement of commercial operation as defined in paragraph (1), (2), or (3) of this definition as appropriate.

(2) Notwithstanding paragraph (1) of this definition and except as provided in § 97.305, for a unit that is not a CAIR NO_X Ozone Season unit under § 97.304 on the later of November 15, 1990 or the date the unit commences commercial operation as defined in paragraph (1) of this definition, the unit's date for commencement of commercial operation shall be the date on which the unit becomes a CAIR NO_X Ozone Season unit under § 97.304.

(i) For a unit with a date for commencement of commercial operation as defined in paragraph (2) of this definition and that subsequently undergoes a physical change (other than replacement of the unit by a unit at the same source), such date shall remain the date of commencement of commercial operation of the unit, which shall continue to be treated as the same unit.

(ii) For a unit with a date for commencement of commercial operation as defined in paragraph (2) of this definition and that is subsequently replaced by a unit at the same source (*e.g.*, repowered), such date shall remain the replaced unit's date of commencement of commercial operation, and the replacement unit shall be treated as a separate unit with a separate date for commencement of commercial operation as defined in paragraph (1), (2), or (3) of this definition as appropriate.

(3) Notwithstanding paragraphs (1) and (2) of this definition, for a unit not serving a generator producing electricity for sale, the unit's date of commencement of operation shall also be the unit's date of commencement of commercial operation.

Commence operation means:

(1) To have begun any mechanical, chemical, or electronic process, including, with regard to a unit, start-up of a unit's combustion chamber, except as provided in § 97.384(h).

(i) For a unit that undergoes a physical change (other than replacement of the unit by a unit at the same source) after the date the unit commences operation as defined in paragraph (1) of this definition, such date shall remain the date of commencement of operation of the unit, which shall continue to be treated as the same unit.

(ii) For a unit that is replaced by a unit at the same source (*e.g.*, repowered) after the date the unit commences operation as defined in paragraph (1) of this definition, such date shall remain the replaced unit's date of commencement of operation, and the replacement unit shall be treated as a separate unit with a separate date for commencement of operation as defined in paragraph (1) or (2) of this definition as appropriate, except as provided in § 97.384(h).

(2) Notwithstanding paragraph (1) of this definition and solely for purposes of subpart HHHH of this part, for a unit that is not a CAIR NO_X Ozone Season unit under § 97.304(d) on the later of November 15, 1990 or the date the unit commences operation as defined in paragraph (1) of this definition and subsequently becomes such a CAIR NO_X Ozone Season unit, the unit's date for commencement of operation shall be the date on which the unit becomes a CAIR NO_X Ozone Season unit under § 97.304(d).

(i) For a unit with a date for commencement of operation as defined in paragraph (2) of this definition and that subsequently undergoes a physical change (other than replacement of the unit by a unit at the same source), such date shall remain the date of commencement of operation of the unit,

which shall continue to be treated as the same unit.

(ii) For a unit with a date for commencement of operation as defined in paragraph (2) of this definition and that is subsequently replaced by a unit at the same source (*e.g.*, repowered), such date shall remain the replaced unit's date of commencement of operation, and the replacement unit shall be treated as a separate unit with a separate date for commencement of operation as defined in paragraph (1) or (2) of this definition as appropriate.

Common stack means a single flue through which emissions from 2 or more units are exhausted.

Compliance account means a CAIR NO_X Ozone Season Allowance Tracking System account, established by the Administrator for a CAIR NO_X Ozone Season source under subpart FFFF or IIII of this part, in which any CAIR NO_X Ozone Season allowance allocations for the CAIR NO_X Ozone Season units at the source are initially recorded and in which are held any CAIR NO_X Ozone Season allowances available for use for a control period in order to meet the source's CAIR NO_X Ozone Season emissions limitation in accordance with § 97.354.

Continuous emission monitoring system or *CEMS* means the equipment required under subpart HHHH of this part to sample, analyze, measure, and provide, by means of readings recorded at least once every 15 minutes (using an automated data acquisition and handling system (DAHS)), a permanent record of nitrogen oxides emissions, stack gas volumetric flow rate, stack gas moisture content, and oxygen or carbon dioxide concentration (as applicable), in a manner consistent with part 75 of this chapter. The following systems are the principal types of continuous emission monitoring systems required under subpart HHHH of this part:

(1) A flow monitoring system, consisting of a stack flow rate monitor and an automated data acquisition and handling system and providing a permanent, continuous record of stack gas volumetric flow rate, in standard cubic feet per hour (scfh);

(2) A nitrogen oxides concentration monitoring system, consisting of a NO_X pollutant concentration monitor and an automated data acquisition and handling system and providing a permanent, continuous record of NO_X emissions, in parts per million (ppm);

(3) A nitrogen oxides emission rate (or NO_X-diluent) monitoring system, consisting of a NO_X pollutant concentration monitor, a diluent gas (CO_2 or O_2) monitor, and an automated data acquisition and handling system and providing a permanent, continuous record of NO_X concentration, in parts per million (ppm), diluent gas concentration, in percent CO_2 or O_2, and NO_X emission rate, in pounds per million British thermal units (lb/mmBtu);

(4) A moisture monitoring system, as defined in § 75.11(b)(2) of this chapter and providing a permanent, continuous record of the stack gas moisture content, in percent H_2O;

(5) A carbon dioxide monitoring system, consisting of a CO_2 pollutant concentration monitor (or an oxygen monitor plus suitable mathematical equations from which the CO_2 concentration is derived) and an automated data acquisition and handling system and providing a permanent, continuous record of CO_2 emissions, in percent CO_2; and

(6) An oxygen monitoring system, consisting of an O_2 concentration monitor and an automated data acquisition and handling system and providing a permanent, continuous record of O_2, in percent O_2.

Control period or *ozone season* means the period beginning May 1 of a calendar year, except as provided in § 97.306(c)(2) and ending on September 30 of the same year, inclusive.

Emissions means air pollutants exhausted from a unit or source into the atmosphere, as measured, recorded, and reported to the Administrator by the CAIR designated representative and as determined by the Administrator in accordance with subpart HHHH of this part.

Excess emissions means any ton of nitrogen oxides emitted by the CAIR NO_X Ozone Season units at a CAIR NO_X Ozone Season source during a control period that exceeds the CAIR NO_X Ozone Season emissions limitation for the source.

Fossil fuel means natural gas, petroleum, coal, or any form of solid, liquid,

or gaseous fuel derived from such material.

Fossil-fuel-fired means, with regard to a unit, combusting any amount of fossil fuel in any calendar year.

Fuel oil means any petroleum-based fuel (including diesel fuel or petroleum derivatives such as oil tar) and any recycled or blended petroleum products or petroleum by-products used as a fuel whether in a liquid, solid, or gaseous state.

General account means a CAIR NO_X Ozone Season Allowance Tracking System account, established under subpart FFFF of this part, that is not a compliance account.

Generator means a device that produces electricity.

Gross electrical output means, with regard to a cogeneration unit, electricity made available for use, including any such electricity used in the power production process (which process includes, but is not limited to, any on-site processing or treatment of fuel combusted at the unit and any on-site emission controls).

Heat input means, with regard to a specified period of time, the product (in mmBtu/time) of the gross calorific value of the fuel (in Btu/lb) divided by 1,000,000 Btu/mmBtu and multiplied by the fuel feed rate into a combustion device (in lb of fuel/time), as measured, recorded, and reported to the Administrator by the CAIR designated representative and determined by the Administrator in accordance with subpart HHHH of this part and excluding the heat derived from preheated combustion air, recirculated flue gases, or exhaust from other sources.

Heat input rate means the amount of heat input (in mmBtu) divided by unit operating time (in hr) or, with regard to a specific fuel, the amount of heat input attributed to the fuel (in mmBtu) divided by the unit operating time (in hr) during which the unit combusts the fuel.

Hg Budget Trading Program means a multi-state Hg air pollution control and emission reduction program approved and administered by the Administrator in accordance subpart HHHH of part 60 of this chapter and § 60.24(h)(6), or established by the Administrator under section 111 of the Clean Air Act, as a means of reducing national Hg emissions.

Life-of-the-unit, firm power contractual arrangement means a unit participation power sales agreement under which a utility or industrial customer reserves, or is entitled to receive, a specified amount or percentage of nameplate capacity and associated energy generated by any specified unit and pays its proportional amount of such unit's total costs, pursuant to a contract:

(1) For the life of the unit;

(2) For a cumulative term of no less than 30 years, including contracts that permit an election for early termination; or

(3) For a period no less than 25 years or 70 percent of the economic useful life of the unit determined as of the time the unit is built, with option rights to purchase or release some portion of the nameplate capacity and associated energy generated by the unit at the end of the period.

Maximum design heat input means the maximum amount of fuel per hour (in Btu/hr) that a unit is capable of combusting on a steady state basis as of the initial installation of the unit as specified by the manufacturer of the unit.

Monitoring system means any monitoring system that meets the requirements of subpart HHHH of this part, including a continuous emissions monitoring system, an alternative monitoring system, or an excepted monitoring system under part 75 of this chapter.

Most stringent State or Federal NO_X emissions limitation means, with regard to a unit, the lowest NO_X emissions limitation (in terms of lb/mmBtu) that is applicable to the unit under State or Federal law, regardless of the averaging period to which the emissions limitation applies.

Nameplate capacity means, starting from the initial installation of a generator, the maximum electrical generating output (in MWe) that the generator is capable of producing on a steady state basis and during continuous operation (when not restricted by seasonal or other deratings) as of such installation as specified by the manufacturer of the generator or, starting from the completion of any subsequent

physical change in the generator resulting in an increase in the maximum electrical generating output (in MWe) that the generator is capable of producing on a steady state basis and during continuous operation (when not restricted by seasonal or other deratings), such increased maximum amount as of such completion as specified by the person conducting the physical change.

Oil-fired means, for purposes of subpart EEEE of this part, combusting fuel oil for more than 15.0 percent of the annual heat input in a specified year and not qualifying as coal-fired.

Operator means any person who operates, controls, or supervises a CAIR NO_X Ozone Season unit or a CAIR NO_X Ozone Season source and shall include, but not be limited to, any holding company, utility system, or plant manager of such a unit or source.

Owner means any of the following persons:

(1) With regard to a CAIR NO_X Ozone Season source or a CAIR NO_X Ozone Season unit at a source, respectively:

(i) Any holder of any portion of the legal or equitable title in a CAIR NO_X Ozone Season unit at the source or the CAIR NO_X Ozone Season unit;

(ii) Any holder of a leasehold interest in a CAIR NO_X Ozone Season unit at the source or the CAIR NO_X Ozone Season unit; or

(iii) Any purchaser of power from a CAIR NO_X Ozone Season unit at the source or the CAIR NO_X Ozone Season unit under a life-of-the-unit, firm power contractual arrangement; provided that, unless expressly provided for in a leasehold agreement, owner shall not include a passive lessor, or a person who has an equitable interest through such lessor, whose rental payments are not based (either directly or indirectly) on the revenues or income from such CAIR NO_X Ozone Season unit; or

(2) With regard to any general account, any person who has an ownership interest with respect to the CAIR NO_X Ozone Season allowances held in the general account and who is subject to the binding agreement for the CAIR authorized account representative to represent the person's ownership interest with respect to CAIR NO_X Ozone Season allowances.

Permitting authority means the State air pollution control agency, local agency, other State agency, or other agency authorized by the Administrator to issue or revise permits to meet the requirements of the CAIR NO_X Ozone Season Trading Program or, if no such agency has been so authorized, the Administrator.

Potential electrical output capacity means 33 percent of a unit(s maximum design heat input, divided by 3,413 Btu/kWh, divided by 1,000 kWh/MWh, and multiplied by 8,760 hr/yr.

Receive or receipt of means, when referring to the permitting authority or the Administrator, to come into possession of a document, information, or correspondence (whether sent in hard copy or by authorized electronic transmission), as indicated in an official log, or by a notation made on the document, information, or correspondence, by the permitting authority or the Administrator in the regular course of business.

Recordation, *record*, or *recorded* means, with regard to CAIR NO_X Ozone Season allowances, the movement of CAIR NO_X Ozone Season allowances by the Administrator into or between CAIR NO_X Ozone Season Allowance Tracking System accounts, for purposes of allocation, transfer, or deduction.

Reference method means any direct test method of sampling and analyzing for an air pollutant as specified in § 75.22 of this chapter.

Replacement, *replace*, or *replaced* means, with regard to a unit, the demolishing of a unit, or the permanent shutdown and permanent disabling of a unit, and the construction of another unit (the replacement unit) to be used instead of the demolished or shutdown unit (the replaced unit).

Repowered means, with regard to a unit, replacement of a coal-fired boiler with one of the following coal-fired technologies at the same source as the coal-fired boiler:

(1) Atmospheric or pressurized fluidized bed combustion;

(2) Integrated gasification combined cycle;

(3) Magnetohydrodynamics;

(4) Direct and indirect coal-fired turbines;

(5) Integrated gasification fuel cells; or

(6) As determined by the Administrator in consultation with the Secretary of Energy, a derivative of one or more of the technologies under paragraphs (1) through (5) of this definition and any other coal-fired technology capable of controlling multiple combustion emissions simultaneously with improved boiler or generation efficiency and with significantly greater waste reduction relative to the performance of technology in widespread commercial use as of January 1, 2005.

Sequential use of energy means:

(1) For a topping-cycle cogeneration unit, the use of reject heat from electricity production in a useful thermal energy application or process; or

(2) For a bottoming-cycle cogeneration unit, the use of reject heat from useful thermal energy application or process in electricity production.

Serial number means, for a CAIR NO_X Ozone Season allowance, the unique identification number assigned to each CAIR NO_X Ozone Season allowance by the Administrator.

Solid waste incineration unit means a stationary, fossil-fuel-fired boiler or stationary, fossil-fuel-fired combustion turbine that is a ''solid waste incineration unit'' as defined in section 129(g)(1) of the Clean Air Act.

Source means all buildings, structures, or installations located in one or more contiguous or adjacent properties under common control of the same person or persons. For purposes of section 502(c) of the Clean Air Act, a ''source,'' including a ''source'' with multiple units, shall be considered a single ''facility.''

State means one of the States or the District of Columbia that is subject to the CAIR NO_X Ozone Season Trading Program pursuant to § 52.35 of this chapter.

Submit or serve means to send or transmit a document, information, or correspondence to the person specified in accordance with the applicable regulation:

(1) In person;

(2) By United States Postal Service; or

(3) By other means of dispatch or transmission and delivery. Compliance with any ''submission'' or ''service'' deadline shall be determined by the date of dispatch, transmission, or mailing and not the date of receipt.

Title V operating permit means a permit issued under title V of the Clean Air Act and part 70 or part 71 of this chapter.

Title V operating permit regulations means the regulations that the Administrator has approved or issued as meeting the requirements of title V of the Clean Air Act and part 70 or 71 of this chapter.

Ton means 2,000 pounds. For the purpose of determining compliance with the CAIR NO_X Ozone Season emissions limitation, total tons of nitrogen oxides emissions for a control period shall be calculated as the sum of all recorded hourly emissions (or the mass equivalent of the recorded hourly emission rates) in accordance with subpart HHHH of this part, but with any remaining fraction of a ton equal to or greater than 0.50 tons deemed to equal one ton and any remaining fraction of a ton less than 0.50 tons deemed to equal zero tons.

Topping-cycle cogeneration unit means a cogeneration unit in which the energy input to the unit is first used to produce useful power, including electricity, and at least some of the reject heat from the electricity production is then used to provide useful thermal energy.

Total energy input means, with regard to a cogeneration unit, total energy of all forms supplied to the cogeneration unit, excluding energy produced by the cogeneration unit itself. Each form of energy supplied shall be measured by the lower heating value of that form of energy calculated as follows:

$$LHV = HHV - 10.55(W + 9H)$$

Where:

LHV = lower heating value of fuel in Btu/lb,
HHV = higher heating value of fuel in Btu/lb,
W = Weight % of moisture in fuel, and
H = Weight % of hydrogen in fuel.

Total energy output means, with regard to a cogeneration unit, the sum of useful power and useful thermal energy produced by the cogeneration unit.

Unit means a stationary, fossil-fuel-fired boiler or combustion turbine or other stationary, fossil-fuel-fired combustion device.

Unit operating day means a calendar day in which a unit combusts any fuel.

Unit operating hour or *hour of unit operation* means an hour in which a unit combusts any fuel.

Useful power means, with regard to a cogeneration unit, electricity or mechanical energy made available for use, excluding any such energy used in the power production process (which process includes, but is not limited to, any on-site processing or treatment of fuel combusted at the unit and any on-site emission controls).

Useful thermal energy means, with regard to a cogeneration unit, thermal energy that is:

(1) Made available to an industrial or commercial process (not a power production process), excluding any heat contained in condensate return or makeup water;

(2) Used in a heating application (*e.g.*, space heating or domestic hot water heating); or

(3) Used in a space cooling application (*i.e.*, thermal energy used by an absorption chiller).

Utility power distribution system means the portion of an electricity grid owned or operated by a utility and dedicated to delivering electricity to customers.

[65 FR 2727, Jan. 18, 2000, as amended at 71 FR 74795, Dec. 13, 2006; 72 FR 59207, Oct. 19, 2007]

§ 97.303 Measurements, abbreviations, and acronyms.

Measurements, abbreviations, and acronyms used in this subpart and subparts BBBB through IIII are defined as follows:

Btu—British thermal unit.
CO_2—carbon dioxide.
H_2O—water.
Hg—mercury.
hr—hour.
kW—kilowatt electrical.
kWh—kilowatt hour.
lb—pound.
mmBtu—million Btu.
MWe—megawatt electrical.
MWh—megawatt hour.
NO_X—nitrogen oxides.
O_2—oxygen.
ppm—parts per million.
scfh—standard cubic feet per hour.
SO_2—sulfur dioxide.
yr—year.

§ 97.304 Applicability.

(a) Except as provided in paragraph (b) of this section:

(1) The following units in a State shall be CAIR NO_X Ozone Season units, and any source that includes one or more such units shall be a CAIR NO_X Ozone Season source, subject to the requirements of this subpart and subparts BBBB through HHHH of this part: any stationary, fossil-fuel-fired boiler or stationary, fossil-fuel-fired combustion turbine serving at any time, since the later of November 15, 1990 or the start-up of the unit(s combustion chamber, a generator with nameplate capacity of more than 25 MWe producing electricity for sale.

(2) If a stationary boiler or stationary combustion turbine that, under paragraph (a)(1) of this section, is not a CAIR NO_X Ozone Season unit begins to combust fossil fuel or to serve a generator with nameplate capacity of more than 25 MWe producing electricity for sale, the unit shall become a CAIR NO_X Ozone Season unit as provided in paragraph (a)(1) of this section on the first date on which it both combusts fossil fuel and serves such generator.

(b) The units in a State that meet the requirements set forth in paragraph (b)(1)(i), (b)(2)(i), or (b)(2)(ii) of this section shall not be CAIR NO_X Ozone Season units:

(1)(i) Any unit that is a CAIR NO_X Ozone Season unit under paragraph (a)(1) or (2) of this section:

(A) Qualifying as a cogeneration unit during the 12-month period starting on the date the unit first produces electricity and continuing to qualify as a cogeneration unit; and

(B) Not serving at any time, since the later of November 15, 1990 or the start-up of the unit's combustion chamber, a generator with nameplate capacity of more than 25 MWe supplying in any calendar year more than one-third of the unit(s potential electric output capacity or 219,000 MWh, whichever is greater, to any utility power distribution system for sale.

(ii) If a unit qualifies as a cogeneration unit during the 12-month period starting on the date the unit first produces electricity and meets the requirements of paragraphs (b)(1)(i) of this section for at least one calendar year, but subsequently no longer meets all such requirements, the unit shall become a CAIR NO_X Ozone Season unit starting on the earlier of January 1 after the first calendar year during which the unit first no longer qualifies as a cogeneration unit or January 1 after the first calendar year during which the unit no longer meets the requirements of paragraph (b)(1)(i)(B) of this section.

(2)(i) Any unit that is a CAIR NO_X Ozone Season unit under paragraph (a)(1) or (2) of this section commencing operation before January 1, 1985:

(A) Qualifying as a solid waste incineration unit; and

(B) With an average annual fuel consumption of non-fossil fuel for 1985–1987 exceeding 80 percent (on a Btu basis) and an average annual fuel consumption of non-fossil fuel for any 3 consecutive calendar years after 1990 exceeding 80 percent (on a Btu basis).

(ii) Any unit that is a CAIR NO_X Ozone Season unit under paragraph (a)(1) or (2) of this section commencing operation on or after January 1, 1985:

(A) Qualifying as a solid waste incineration unit; and

(B) With an average annual fuel consumption of non-fossil fuel for the first 3 calendar years of operation exceeding 80 percent (on a Btu basis) and an average annual fuel consumption of non-fossil fuel for any 3 consecutive calendar years after 1990 exceeding 80 percent (on a Btu basis).

(iii) If a unit qualifies as a solid waste incineration unit and meets the requirements of paragraph (b)(2)(i) or (ii) of this section for at least 3 consecutive calendar years, but subsequently no longer meets all such requirements, the unit shall become a CAIR NO_X Ozone Season unit starting on the earlier of January 1 after the first calendar year during which the unit first no longer qualifies as a solid waste incineration unit or January 1 after the first 3 consecutive calendar years after 1990 for which the unit has an average annual fuel consumption of fossil fuel of 20 percent or more.

(c) A certifying official of an owner or operator of any unit may petition the Administrator at any time for a determination concerning the applicability, under paragraphs (a) and (b) of this section, of the CAIR NO_X Ozone Season Trading Program to the unit.

(1) *Petition content.* The petition shall be in writing and include the identification of the unit and the relevant facts about the unit. The petition and any other documents provided to the Administrator in connection with the petition shall include the following certification statement, signed by the certifying official: ''I am authorized to make this submission on behalf of the owners and operators of the unit for which the submission is made. I certify under penalty of law that I have personally examined, and am familiar with, the statements and information submitted in this document and all its attachments. Based on my inquiry of those individuals with primary responsibility for obtaining the information, I certify that the statements and information are to the best of my knowledge and belief true, accurate, and complete. I am aware that there are significant penalties for submitting false statements and information or omitting required statements and information, including the possibility of fine or imprisonment.''

(2) *Submission.* The petition and any other documents provided in connection with the petition shall be submitted to the Director of the Clean Air Markets Division (or its successor), U.S. Environmental Protection Agency, who will act on the petition as the Administrator's duly authorized representative.

(3) *Response.* The Administrator will issue a written response to the petition and may request supplemental information relevant to such petition. The Administrator's determination concerning the applicability, under paragraphs (a) and (b) of this section, of the CAIR NO_X Ozone Season Trading Program to the unit shall be binding on the permitting authority unless the petition or other information or documents provided in connection with the petition are found to have contained

significant, relevant errors or omissions.

(d) Notwithstanding paragraphs (a) and (b) of this section, if a State submits, and the Administrator approves, a State implementation plan revision in accordance with § 51.123(ee)(1) of this chapter providing for the inclusion in the CAIR NO_X Ozone Season Trading Program of all units that are not otherwise CAIR NO_X Ozone Season units under paragraphs (a) and (b) of this section and that are NO_X Budget units covered by the State's emissions trading program approved under § 51.121(p) of this chapter, such units shall be CAIR NO_X Ozone Season units as of the first date that they are NO_X Budget units under the NO_X Budget Trading Program under § 51.121(p) of this chapter.

§ 97.305 Retired unit exemption.

(a)(1) Any CAIR NO_X Ozone Season unit that is permanently retired and is not a CAIR NO_X Ozone Season opt-in unit under subpart IIII of this part shall be exempt from the CAIR NO_X Ozone Season Trading Program, except for the provisions of this section, §§ 97.302, 97.303, 97.304, 97.306(c)(4) through (7), 97.307, 97.308, and subparts BBBB and EEEE through GGGG of this part.

(2) The exemption under paragraph (a)(1) of this section shall become effective the day on which the CAIR NO_X Ozone Season unit is permanently retired. Within 30 days of the unit's permanent retirement, the CAIR designated representative shall submit a statement to the permitting authority otherwise responsible for administering any CAIR permit for the unit and shall submit a copy of the statement to the Administrator. The statement shall state, in a format prescribed by the permitting authority, that the unit was permanently retired on a specific date and will comply with the requirements of paragraph (b) of this section.

(3) After receipt of the statement under paragraph (a)(2) of this section, the permitting authority will amend any permit under subpart CCCC of this part covering the source at which the unit is located to add the provisions and requirements of the exemption under paragraphs (a)(1) and (b) of this section.

(b) *Special provisions.* (1) A unit exempt under paragraph (a) of this section shall not emit any nitrogen oxides, starting on the date that the exemption takes effect.

(2) The Administrator or the permitting authority will allocate CAIR NO_X Ozone Season allowances under subpart EEEE of this part to a unit exempt under paragraph (a) of this section.

(3) For a period of 5 years from the date the records are created, the owners and operators of a unit exempt under paragraph (a) of this section shall retain at the source that includes the unit, records demonstrating that the unit is permanently retired. The 5-year period for keeping records may be extended for cause, at any time before the end of the period, in writing by the permitting authority or the Administrator. The owners and operators bear the burden of proof that the unit is permanently retired.

(4) The owners and operators and, to the extent applicable, the CAIR designated representative of a unit exempt under paragraph (a) of this section shall comply with the requirements of the CAIR NO_X Ozone Season Trading Program concerning all periods for which the exemption is not in effect, even if such requirements arise, or must be complied with, after the exemption takes effect.

(5) A unit exempt under paragraph (a) of this section and located at a source that is required, or but for this exemption would be required, to have a title V operating permit shall not resume operation unless the CAIR designated representative of the source submits a complete CAIR permit application under § 97.322 for the unit not less than 18 months (or such lesser time provided by the permitting authority) before the later of January 1, 2009 or the date on which the unit resumes operation.

(6) On the earlier of the following dates, a unit exempt under paragraph (a) of this section shall lose its exemption:

(i) The date on which the CAIR designated representative submits a CAIR permit application for the unit under paragraph (b)(5) of this section;

(ii) The date on which the CAIR designated representative is required under paragraph (b)(5) of this section to submit a CAIR permit application for the unit; or

(iii) The date on which the unit resumes operation, if the CAIR designated representative is not required to submit a CAIR permit application for the unit.

(7) For the purpose of applying monitoring, reporting, and recordkeeping requirements under subpart HHHH of this part, a unit that loses its exemption under paragraph (a) of this section shall be treated as a unit that commences commercial operation on the first date on which the unit resumes operation.

§ 97.306 Standard requirements.

(a) *Permit requirements.* (1) The CAIR designated representative of each CAIR NO_X Ozone Season source required to have a title V operating permit and each CAIR NO_X Ozone Season unit required to have a title V operating permit at the source shall:

(i) Submit to the permitting authority a complete CAIR permit application under § 97.322 in accordance with the deadlines specified in § 97.321; and

(ii) Submit in a timely manner any supplemental information that the permitting authority determines is necessary in order to review a CAIR permit application and issue or deny a CAIR permit.

(2) The owners and operators of each CAIR NO_X Ozone Season source required to have a title V operating permit and each CAIR NO_X Ozone Season unit required to have a title V operating permit at the source shall have a CAIR permit issued by the permitting authority under subpart CCCC of this part for the source and operate the source and the unit in compliance with such CAIR permit.

(3) Except as provided in subpart IIII of this part, the owners and operators of a CAIR NO_X Ozone Season source that is not otherwise required to have a title V operating permit and each CAIR NO_X Ozone Season unit that is not otherwise required to have a title V operating permit are not required to submit a CAIR permit application, and to have a CAIR permit, under subpart CCCC of this part for such CAIR NO_X Ozone Season source and such CAIR NO_X Ozone Season unit.

(b) *Monitoring, reporting, and recordkeeping requirements.* (1) The owners and operators, and the CAIR designated representative, of each CAIR NO_X Ozone Season source and each CAIR NO_X Ozone Season unit at the source shall comply with the monitoring, reporting, and recordkeeping requirements of subpart HHHH of this part.

(2) The emissions measurements recorded and reported in accordance with subpart HHHH of this part shall be used to determine compliance by each CAIR NO_X Ozone Season source with the CAIR NO_X Ozone Season emissions limitation under paragraph (c) of this section.

(c) *Nitrogen oxides ozone season emission requirements.* (1) As of the allowance transfer deadline for a control period, the owners and operators of each CAIR NO_X Ozone Season source and each CAIR NO_X Ozone Season unit at the source shall hold, in the source's compliance account, CAIR NO_X Ozone Season allowances available for compliance deductions for the control period under § 97.354(a) in an amount not less than the tons of total nitrogen oxides emissions for the control period from all CAIR NO_X Ozone Season units at the source, as determined in accordance with subpart HHHH of this part.

(2) A CAIR NO_X Ozone Season unit shall be subject to the requirements under paragraph (c)(1) of this section for the control period starting on the later of May 1, 2009 or the deadline for meeting the unit's monitor certification requirements under § 97.370(b)(1), (2), (3), or (7) and for each control period thereafter.

(3) A CAIR NO_X Ozone Season allowance shall not be deducted, for compliance with the requirements under paragraph (c)(1) of this section, for a control period in a calendar year before the year for which the CAIR NO_X Ozone Season allowance was allocated.

(4) CAIR NO_X Ozone Season allowances shall be held in, deducted from, or transferred into or among CAIR NO_X Ozone Season Allowance Tracking System accounts in accordance with subparts EEEE, FFFF, GGGG, and IIII of this part.

(5) A CAIR NO_X Ozone Season allowance is a limited authorization to emit one ton of nitrogen oxides in accordance with the CAIR NO_X Ozone Season Trading Program. No provision of the CAIR NO_X Ozone Season Trading Program, the CAIR permit application, the CAIR permit, or an exemption under § 97.305 and no provision of law shall be construed to limit the authority of the United States to terminate or limit such authorization.

(6) A CAIR NO_X Ozone Season allowance does not constitute a property right.

(7) Upon recordation by the Administrator under subpart EEEE, FFFF, GGGG, or IIII of this part, every allocation, transfer, or deduction of a CAIR NO_X Ozone Season allowance to or from a CAIR NO_X Ozone Season source's compliance account is incorporated automatically in any CAIR permit of the source.

(d) *Excess emissions requirements.* If a CAIR NO_X Ozone Season source emits nitrogen oxides during any control period in excess of the CAIR NO_X Ozone Season emissions limitation, then:

(1) The owners and operators of the source and each CAIR NO_X Ozone Season unit at the source shall surrender the CAIR NO_X Ozone Season allowances required for deduction under § 97.354(d)(1) and pay any fine, penalty, or assessment or comply with any other remedy imposed, for the same violations, under the Clean Air Act or applicable State law; and

(2) Each ton of such excess emissions and each day of such control period shall constitute a separate violation of this subpart, the Clean Air Act, and applicable State law.

(e) *Recordkeeping and reporting requirements.* (1) Unless otherwise provided, the owners and operators of the CAIR NO_X Ozone Season source and each CAIR NO_X Ozone Season unit at the source shall keep on site at the source each of the following documents for a period of 5 years from the date the document is created. This period may be extended for cause, at any time before the end of 5 years, in writing by the permitting authority or the Administrator.

(i) The certificate of representation under § 97.313 for the CAIR designated representative for the source and each CAIR NO_X Ozone Season unit at the source and all documents that demonstrate the truth of the statements in the certificate of representation; provided that the certificate and documents shall be retained on site at the source beyond such 5-year period until such documents are superseded because of the submission of a new certificate of representation under § 97.313 changing the CAIR designated representative.

(ii) All emissions monitoring information, in accordance with subpart HHHH of this part, provided that to the extent that subpart HHHH of this part provides for a 3-year period for recordkeeping, the 3-year period shall apply.

(iii) Copies of all reports, compliance certifications, and other submissions and all records made or required under the CAIR NO_X Ozone Season Trading Program.

(iv) Copies of all documents used to complete a CAIR permit application and any other submission under the CAIR NO_X Ozone Season Trading Program or to demonstrate compliance with the requirements of the CAIR NO_X Ozone Season Trading Program.

(2) The CAIR designated representative of a CAIR NO_X Ozone Season source and each CAIR NO_X Ozone Season unit at the source shall submit the reports required under the CAIR NO_X Ozone Season Trading Program, including those under subpart HHHH of this part.

(f) *Liability.* (1) Each CAIR NO_X Ozone Season source and each CAIR NO_X Ozone Season unit shall meet the requirements of the CAIR NO_X Ozone Season Trading Program.

(2) Any provision of the CAIR NO_X Ozone Season Trading Program that applies to a CAIR NO_X Ozone Season source or the CAIR designated representative of a CAIR NO_X Ozone Season source shall also apply to the owners and operators of such source and of the CAIR NO_X Ozone Season units at the source.

(3) Any provision of the CAIR NO_X Ozone Season Trading Program that applies to a CAIR NO_X Ozone Season unit or the CAIR designated representative of a CAIR NO_X Ozone Season unit

shall also apply to the owners and operators of such unit.

(g) *Effect on other authorities.* No provision of the CAIR NO_X Ozone Season Trading Program, a CAIR permit application, a CAIR permit, or an exemption under § 97.305 shall be construed as exempting or excluding the owners and operators, and the CAIR designated representative, of a CAIR NO_X Ozone Season source or CAIR NO_X Ozone Season unit from compliance with any other provision of the applicable, approved State implementation plan, a federally enforceable permit, or the Clean Air Act.

§ 97.307 Computation of time.

(a) Unless otherwise stated, any time period scheduled, under the CAIR NO_X Ozone Season Trading Program, to begin on the occurrence of an act or event shall begin on the day the act or event occurs.

(b) Unless otherwise stated, any time period scheduled, under the CAIR NO_X Ozone Season Trading Program, to begin before the occurrence of an act or event shall be computed so that the period ends the day before the act or event occurs.

(c) Unless otherwise stated, if the final day of any time period, under the CAIR NO_X Ozone Season Trading Program, falls on a weekend or a State or Federal holiday, the time period shall be extended to the next business day.

§ 97.308 Appeal procedures.

The appeal procedures for decisions of the Administrator under the CAIR NO_X Ozone Season Trading Program are set forth in part 78 of this chapter.

APPENDIX A TO SUBPART AAAA OF PART 97—STATES WITH APPROVED STATE IMPLEMENTATION PLAN REVISIONS CONCERNING APPLICABILITY

The following States have State Implementation Plan revisions under § 51.123(ee)(1) of this chapter approved by the Administrator and providing for expansion of the applicability provisions to include all non-EGUs subject to the respective State's emission trading program approved under § 51.121(p) of this chapter:

Michigan

Tennessee

[65 FR 2727, Jan. 18, 2000, as amended at 72 FR 72262, Dec. 20, 2007; 74 FR 61537, Nov. 25, 2009]

Subpart BBBB—CAIR Designated Representative for CAIR NO_X Ozone Season Sources

§ 97.310 Authorization and responsibilities of CAIR designated representative.

(a) Except as provided under § 97.311, each CAIR NO_X Ozone Season source, including all CAIR NO_X Ozone Season units at the source, shall have one and only one CAIR designated representative, with regard to all matters under the CAIR NO_X Ozone Season Trading Program concerning the source or any CAIR NO_X Ozone Season unit at the source.

(b) The CAIR designated representative of the CAIR NO_X Ozone Season source shall be selected by an agreement binding on the owners and operators of the source and all CAIR NO_X Ozone Season units at the source and shall act in accordance with the certification statement in § 97.313(a)(4)(iv).

(c) Upon receipt by the Administrator of a complete certificate of representation under § 97.313, the CAIR designated representative of the source shall represent and, by his or her representations, actions, inactions, or submissions, legally bind each owner and operator of the CAIR NO_X Ozone Season source represented and each CAIR NO_X Ozone Season unit at the source in all matters pertaining to the CAIR NO_X Ozone Season Trading Program, notwithstanding any agreement between the CAIR designated representative and such owners and operators. The owners and operators shall be bound by any decision or order issued to the CAIR designated representative by the permitting authority, the Administrator, or a court regarding the source or unit.

(d) No CAIR permit will be issued, no emissions data reports will be accepted, and no CAIR NO_X Ozone Season Allowance Tracking System account will be established for a CAIR NO_X Ozone Season unit at a source, until the Administrator has received a complete certificate of representation under

§ 97.313 for a CAIR designated representative of the source and the CAIR NO_X Ozone Season units at the source.

(e)(1) Each submission under the CAIR NO_X Ozone Season Trading Program shall be submitted, signed, and certified by the CAIR designated representative for each CAIR NO_X Ozone Season source on behalf of which the submission is made. Each such submission shall include the following certification statement by the CAIR designated representative: ''I am authorized to make this submission on behalf of the owners and operators of the source or units for which the submission is made. I certify under penalty of law that I have personally examined, and am familiar with, the statements and information submitted in this document and all its attachments. Based on my inquiry of those individuals with primary responsibility for obtaining the information, I certify that the statements and information are to the best of my knowledge and belief true, accurate, and complete. I am aware that there are significant penalties for submitting false statements and information or omitting required statements and information, including the possibility of fine or imprisonment.''

(2) The permitting authority and the Administrator will accept or act on a submission made on behalf of owner or operators of a CAIR NO_X Ozone Season source or a CAIR NO_X Ozone Season unit only if the submission has been made, signed, and certified in accordance with paragraph (e)(1) of this section.

§ 97.311 Alternate CAIR designated representative.

(a) A certificate of representation under § 97.313 may designate one and only one alternate CAIR designated representative, who may act on behalf of the CAIR designated representative. The agreement by which the alternate CAIR designated representative is selected shall include a procedure for authorizing the alternate CAIR designated representative to act in lieu of the CAIR designated representative.

(b) Upon receipt by the Administrator of a complete certificate of representation under § 97.313, any representation, action, inaction, or submission by the alternate CAIR designated representative shall be deemed to be a representation, action, inaction, or submission by the CAIR designated representative.

(c) Except in this section and §§ 97.302, 97.310(a) and (d), 97.312, 97.313, 97.315, 97.351, and 97.382, whenever the term ''CAIR designated representative'' is used in subparts AAAA through IIII of this part, the term shall be construed to include the CAIR designated representative or any alternate CAIR designated representative.

§ 97.312 Changing CAIR designated representative and alternate CAIR designated representative; changes in owners and operators.

(a) *Changing CAIR designated representative.* The CAIR designated representative may be changed at any time upon receipt by the Administrator of a superseding complete certificate of representation under § 97.313. Notwithstanding any such change, all representations, actions, inactions, and submissions by the previous CAIR designated representative before the time and date when the Administrator receives the superseding certificate of representation shall be binding on the new CAIR designated representative and the owners and operators of the CAIR NO_X Ozone Season source and the CAIR NO_X Ozone Season units at the source.

(b) *Changing alternate CAIR designated representative.* The alternate CAIR designated representative may be changed at any time upon receipt by the Administrator of a superseding complete certificate of representation under § 97.313. Notwithstanding any such change, all representations, actions, inactions, and submissions by the previous alternate CAIR designated representative before the time and date when the Administrator receives the superseding certificate of representation shall be binding on the new alternate CAIR designated representative and the owners and operators of the CAIR NO_X Ozone Season source and the CAIR NO_X Ozone Season units at the source.

(c) *Changes in owners and operators.* (1) In the event an owner or operator of a CAIR NO_X Ozone Season source or a

CAIR NO_X Ozone Season unit is not included in the list of owners and operators in the certificate of representation under § 97.313, such owner or operator shall be deemed to be subject to and bound by the certificate of representation, the representations, actions, inactions, and submissions of the CAIR designated representative and any alternate CAIR designated representative of the source or unit, and the decisions and orders of the permitting authority, the Administrator, or a court, as if the owner or operator were included in such list.

(2) Within 30 days following any change in the owners and operators of a CAIR NO_X Ozone Season source or a CAIR NO_X Ozone Season unit, including the addition of a new owner or operator, the CAIR designated representative or any alternate CAIR designated representative shall submit a revision to the certificate of representation under § 97.313 amending the list of owners and operators to include the change.

§ 97.313 Certificate of representation.

(a) A complete certificate of representation for a CAIR designated representative or an alternate CAIR designated representative shall include the following elements in a format prescribed by the Administrator:

(1) Identification of the CAIR NO_X Ozone Season source, and each CAIR NO_X Ozone Season unit at the source, for which the certificate of representation is submitted, including identification and nameplate capacity of each generator served by each such unit.

(2) The name, address, e-mail address (if any), telephone number, and facsimile transmission number (if any) of the CAIR designated representative and any alternate CAIR designated representative.

(3) A list of the owners and operators of the CAIR NO_X Ozone Season source and of each CAIR NO_X Ozone Season unit at the source.

(4) The following certification statements by the CAIR designated representative and any alternate CAIR designated representative—

(i) ''I certify that I was selected as the CAIR designated representative or alternate CAIR designated representative, as applicable, by an agreement binding on the owners and operators of the source and each CAIR NO_X Ozone Season unit at the source.''

(ii) ''I certify that I have all the necessary authority to carry out my duties and responsibilities under the CAIR NO_X Ozone Season Trading Program on behalf of the owners and operators of the source and of each CAIR NO_X Ozone Season unit at the source and that each such owner and operator shall be fully bound by my representations, actions, inactions, or submissions.''

(iii) ''I certify that the owners and operators of the source and of each CAIR NO_X Ozone Season unit at the source shall be bound by any order issued to me by the Administrator, the permitting authority, or a court regarding the source or unit.''

(iv) ''Where there are multiple holders of a legal or equitable title to, or a leasehold interest in, a CAIR NO_X Ozone Season unit, or where a utility or industrial customer purchases power from a CAIR NO_X Ozone Season unit under a life-of-the-unit, firm power contractual arrangement, I certify that: I have given a written notice of my selection as the 'CAIR designated representative' or 'alternate CAIR designated representative', as applicable, and of the agreement by which I was selected to each owner and operator of the source and of each CAIR NO_X Ozone Season unit at the source; and CAIR NO_X Ozone Season allowances and proceeds of transactions involving CAIR NO_X Ozone Season allowances will be deemed to be held or distributed in proportion to each holder's legal, equitable, leasehold, or contractual reservation or entitlement, except that, if such multiple holders have expressly provided for a different distribution of CAIR NO_X Ozone Season allowances by contract, CAIR NO_X Ozone Season allowances and proceeds of transactions involving CAIR NO_X Ozone Season allowances will be deemed to be held or distributed in accordance with the contract.''

(5) The signature of the CAIR designated representative and any alternate CAIR designated representative and the dates signed.

(b) Unless otherwise required by the permitting authority or the Administrator, documents of agreement referred to in the certificate of representation shall not be submitted to the permitting authority or the Administrator. Neither the permitting authority nor the Administrator shall be under any obligation to review or evaluate the sufficiency of such documents, if submitted.

§ 97.314 Objections concerning CAIR designated representative.

(a) Once a complete certificate of representation under § 97.313 has been submitted and received, the permitting authority and the Administrator will rely on the certificate of representation unless and until a superseding complete certificate of representation under § 97.313 is received by the Administrator.

(b) Except as provided in § 97.312(a) or (b), no objection or other communication submitted to the permitting authority or the Administrator concerning the authorization, or any representation, action, inaction, or submission, of the CAIR designated representative shall affect any representation, action, inaction, or submission of the CAIR designated representative or the finality of any decision or order by the permitting authority or the Administrator under the CAIR NO_X Ozone Season Trading Program.

(c) Neither the permitting authority nor the Administrator will adjudicate any private legal dispute concerning the authorization or any representation, action, inaction, or submission of any CAIR designated representative, including private legal disputes concerning the proceeds of CAIR NO_X Ozone Season allowance transfers.

§ 97.315 Delegation by CAIR designated representative and alternate CAIR designated representative.

(a) A CAIR designated representative may delegate, to one or more natural persons, his or her authority to make an electronic submission to the Administrator provided for or required under this part.

(b) An alternate CAIR designated representative may delegate, to one or more natural persons, his or her authority to make an electronic submission to the Administrator provided for or required under this part.

(c) In order to delegate authority to make an electronic submission to the Administrator in accordance with paragraph (a) or (b) of this section, the CAIR designated representative or alternate CAIR designated representative, as appropriate, must submit to the Administrator a notice of delegation, in a format prescribed by the Administrator, that includes the following elements:

(1) The name, address, e-mail address, telephone number, and facsimile transmission number (if any) of such CAIR designated representative or alternate CAIR designated representative;

(2) The name, address, e-mail address, telephone number, and facsimile transmission number (if any) of each such natural person (referred to as an ''agent'');

(3) For each such natural person, a list of the type or types of electronic submissions under paragraph (a) or (b) of this section for which authority is delegated to him or her; and

(4) The following certification statements by such CAIR designated representative or alternate CAIR designated representative:

(i) ''I agree that any electronic submission to the Administrator that is by an agent identified in this notice of delegation and of a type listed for such agent in this notice of delegation and that is made when I am a CAIR designated representative or alternate CAIR designated representative, as appropriate, and before this notice of delegation is superseded by another notice of delegation under 40 CFR 97.315(d) shall be deemed to be an electronic submission by me.''

(ii) ''Until this notice of delegation is superseded by another notice of delegation under 40 CFR 97.315(d), I agree to maintain an e-mail account and to notify the Administrator immediately of any change in my e-mail address unless all delegation of authority by me under 40 CFR 97.315 is terminated.''.

(d) A notice of delegation submitted under paragraph (c) of this section shall be effective, with regard to the

CAIR designated representative or alternate CAIR designated representative identified in such notice, upon receipt of such notice by the Administrator and until receipt by the Administrator of a superseding notice of delegation submitted by such CAIR designated representative or alternate CAIR designated representative, as appropriate. The superseding notice of delegation may replace any previously identified agent, add a new agent, or eliminate entirely any delegation of authority.

(e) Any electronic submission covered by the certification in paragraph (c)(4)(i) of this section and made in accordance with a notice of delegation effective under paragraph (d) of this section shall be deemed to be an electronic submission by the CAIR designated representative or alternate CAIR designated representative submitting such notice of delegation.

Subpart CCCC—Permits

§ 97.320 General CAIR NO_X Ozone Season Trading Program permit requirements.

(a) For each CAIR NO_X Ozone Season source required to have a title V operating permit or required, under subpart IIII of this part, to have a title V operating permit or other federally enforceable permit, such permit shall include a CAIR permit administered by the permitting authority for the title V operating permit or the federally enforceable permit as applicable. The CAIR portion of the title V permit or other federally enforceable permit as applicable shall be administered in accordance with the permitting authority's title V operating permits regulations promulgated under part 70 or 71 of this chapter or the permitting authority's regulations for other federally enforceable permits as applicable, except as provided otherwise by § 97.305, this subpart, and subpart IIII of this part.

(b) Each CAIR permit shall contain, with regard to the CAIR NO_X Ozone Season source and the CAIR NO_X Ozone Season units at the source covered by the CAIR permit, all applicable CAIR NO_X Ozone Season Trading Program, CAIR NO_X Annual Trading Program, and CAIR SO_2 Trading Program requirements and shall be a complete and separable portion of the title V operating permit or other federally enforceable permit under paragraph (a) of this section.

§ 97.321 Submission of CAIR permit applications.

(a) *Duty to apply*. The CAIR designated representative of any CAIR NO_X Ozone Season source required to have a title V operating permit shall submit to the permitting authority a complete CAIR permit application under § 97.322 for the source covering each CAIR NO_X Ozone Season unit at the source at least 18 months (or such lesser time provided by the permitting authority) before the later of January 1, 2009 or the date on which the CAIR NO_X Ozone Season unit commences commercial operation, except as provided in § 97.383(a).

(b) *Duty to reapply*. For a CAIR NO_X Ozone Season source required to have a title V operating permit, the CAIR designated representative shall submit a complete CAIR permit application under § 97.322 for the source covering each CAIR NO_X Ozone Season unit at the source to renew the CAIR permit in accordance with the permitting authority's title V operating permits regulations addressing permit renewal, except as provided in § 97.383(b).

§ 97.322 Information requirements for CAIR permit applications.

A complete CAIR permit application shall include the following elements concerning the CAIR NO_X Ozone Season source for which the application is submitted, in a format prescribed by the permitting authority:

(a) Identification of the CAIR NO_X Ozone Season source;

(b) Identification of each CAIR NO_X Ozone Season unit at the CAIR NO_X Ozone Season source; and

(c) The standard requirements under § 97.306.

§ 97.323 CAIR permit contents and term.

(a) Each CAIR permit will contain, in a format prescribed by the permitting authority, all elements required for a complete CAIR permit application under § 97.322.

(b) Each CAIR permit is deemed to incorporate automatically the definitions of terms under § 97.302 and, upon recordation by the Administrator under subpart EEEE, FFFF, GGGG, or IIII of this part, every allocation, transfer, or deduction of a CAIR NO_X Ozone Season allowance to or from the compliance account of the CAIR NO_X Ozone Season source covered by the permit.

(c) The term of the CAIR permit will be set by the permitting authority, as necessary to facilitate coordination of the renewal of the CAIR permit with issuance, revision, or renewal of the CAIR NO_X Ozone Season source's title V operating permit or other federally enforceable permit as applicable.

§ 97.324 CAIR permit revisions.

Except as provided in § 97.323(b), the permitting authority will revise the CAIR permit, as necessary, in accordance with the permitting authority's title V operating permits regulations or the permitting authority's regulations for other federally enforceable permits as applicable addressing permit revisions.

Subpart DDDD [Reserved]

Subpart EEEE—CAIR NO_X Ozone Season Allowance Allocations

§ 97.340 State trading budgets.

(a) Except as provided in paragraph (b) of this section, the State trading budgets for annual allocations of CAIR NO_X Ozone Season allowances for the control periods in 2009 through 2014 and in 2015 and thereafter are respectively as follows:

State	State trading budget for 2009–2014 (tons)	State trading budget for 2015 and thereafter (tons)
Alabama	32,182	26,818
Arkansas	11,515	9,597
Connecticut	2,559	2,559
Delaware	2,226	1,855
District of Columbia	112	94
Florida	47,912	39,926
Illinois	30,701	28,981
Indiana	45,952	39,273
Iowa	14,263	11,886
Kentucky	36,045	30,587
Louisiana	17,085	14,238
Maryland	12,834	10,695
Massachusetts	7,551	6,293
Michigan	28,971	24,142
Mississippi	8,714	7,262
Missouri	26,678	22,231
New Jersey	6,654	5,545
New York	20,632	17,193
North Carolina	28,392	23,660
Ohio	45,664	39,945
Pennsylvania	42,171	35,143
South Carolina	15,249	12,707
Tennessee	22,842	19,035
Virginia	15,994	13,328
West Virginia	26,859	26,525
Wisconsin	17,987	14,989

(b) Upon approval by the Administrator of a State's State implementation plan revision under § 51.123(ee)(1) of this chapter providing for the inclusion in the CAIR NO_X Ozone Season Trading Program of all units that are not otherwise CAIR NO_X Ozone Season units under § 97.304(a) and (b) and that are NO_X Budget units covered by the State's emissions trading program approved under § 51.121(p), the amount in the State trading budget for a control period in a calendar year will be the sum of the amount set forth for the State and for the year in paragraph (a) of this section and the amount of additional CAIR NO_X Ozone Season allowance allocations issued under § 51.123(ee)(1)(ii)(A) of this chapter for the year.

§ 97.341 Timing requirements for CAIR NO_X Ozone Season allowance allocations.

(a) The Administrator will determine by order the CAIR NO_X Ozone Season allowance allocations, in accordance with § 97.342(a) and (b), for the control periods in 2009, 2010, 2011, 2012, 2013, and 2014.

(b) By July 31, 2011 and July 31 of each year thereafter, the Administrator will determine by order the CAIR NO_X Ozone Season allowance allocations, in accordance with § 97.342(a) and (b), for the control period in the fourth year after the year of the applicable deadline for determination under this paragraph.

(c) By April 30, 2009 and April 30 of each year thereafter, the Administrator will determine by order the

CAIR NO_X Ozone Season allowance allocations, in accordance with § 97.342(a), (c), and (d), for the control period in the year of the applicable deadline for determination under this paragraph.

(d) The Administrator will make available to the public each determination of CAIR NO_X Ozone Season allowances under paragraph (a), (b), or (c) of this section and will provide an opportunity for submission of objections to the determination. Objections shall be limited to addressing whether the determination is in accordance with § 97.342. Based on any such objections, the Administrator will adjust each determination to the extent necessary to ensure that it is in accordance with § 97.342.

§ 97.342 CAIR NO_X Ozone Season allowance allocations.

(a)(1) The baseline heat input (in mmBtu) used with respect to CAIR NO_X Ozone Season allowance allocations under paragraph (b) of this section for each CAIR NO_X Ozone Season unit will be:

(i) For units commencing operation before January 1, 2001 the average of the 3 highest amounts of the unit's adjusted control period heat input for 2000 through 2004, with the adjusted control period heat input for each year calculated as follows:

(A) If the unit is coal-fired during the year, the unit's control period heat input for such year is multiplied by 100 percent;

(B) If the unit is oil-fired during the year, the unit's control period heat input for such year is multiplied by 60 percent; and

(C) If the unit is not subject to paragraph (a)(1)(i)(A) or (B) of this section, the unit's control period heat input for such year is multiplied by 40 percent.

(ii) For units commencing operation on or after January 1, 2001 and operating each calendar year during a period of 5 or more consecutive calendar years, the average of the 3 highest amounts of the unit's total converted control period heat input over the first such 5 years.

(2)(i) A unit's control period heat input, and a unit's status as coal-fired or oil-fired, for a calendar year under paragraph (a)(1)(i) of this section, and a unit's total tons of NO_X emissions during a control period in a calendar year under paragraph (c)(3) of this section, will be determined in accordance with part 75 of this chapter, to the extent the unit was otherwise subject to the requirements of part 75 of this chapter for the year, or will be based on the best available data reported to the Administrator for the unit (in a format prescribed by the Administrator), to the extent the unit was not otherwise subject to the requirements of part 75 of this chapter for the year.

(ii) A unit's converted control period heat input for a calendar year specified under paragraph (a)(1)(ii) of this section equals:

(A) Except as provided in paragraph (a)(2)(ii)(B) or (C) of this section, the control period gross electrical output of the generator or generators served by the unit multiplied by 7,900 Btu/kWh, if the unit is coal-fired for the year, or 6,675 Btu/kWh, if the unit is not coal-fired for the year, and divided by 1,000,000 Btu/mmBtu, provided that if a generator is served by 2 or more units, then the gross electrical output of the generator will be attributed to each unit in proportion to the unit's share of the total control period heat input of such units for the year;

(B) For a unit that is a boiler and has equipment used to produce electricity and useful thermal energy for industrial, commercial, heating, or cooling purposes through the sequential use of energy, the total heat energy (in Btu) of the steam produced by the boiler during the control period, divided by 0.8 and by 1,000,000 Btu/mmBtu; or

(C) For a unit that is a combustion turbine and has equipment used to produce electricity and useful thermal energy for industrial, commercial, heating, or cooling purposes through the sequential use of energy, the control period gross electrical output of the enclosed device comprising the compressor, combustor, and turbine multiplied by 3,413 Btu/kWh, plus the total heat energy (in Btu) of the steam produced by any associated heat recovery steam generator during the control period divided by 0.8, and with the sum divided by 1,000,000 Btu/mmBtu.

(iii) Gross electrical output and total heat energy under paragraph (a)(2)(ii) of this section will be determined based on the best available data reported to the Administrator for the unit (in a format prescribed by the Administrator).

(3) The Administrator will determine what data are the best available data under paragraph (a)(2) of this section by weighing the likelihood that data are accurate and reliable and giving greater weight to data submitted to a governmental entity in compliance with legal requirements or substantiated by an independent entity.

(b)(1) For each control period in 2009 and thereafter, the Administrator will allocate to all CAIR NO_X Ozone Season units in a State that have a baseline heat input (as determined under paragraph (a) of this section) a total amount of CAIR NO_X Ozone Season allowances equal to 95 percent for a control period during 2009 through 2014, and 97 percent for a control period during 2015 and thereafter, of the tons of NO_X emissions in the applicable State trading budget under § 97.340 (except as provided in paragraphs (d) and (e) of this section).

(2) The Administrator will allocate CAIR NO_X Ozone Season allowances to each CAIR NO_X Ozone Season unit under paragraph (b)(1) of this section in an amount determined by multiplying the total amount of CAIR NO_X Ozone Season allowances allocated under paragraph (b)(1) of this section by the ratio of the baseline heat input of such CAIR NO_X Ozone Season unit to the total amount of baseline heat input of all such CAIR NO_X Ozone Season units in the State and rounding to the nearest whole allowance as appropriate.

(c) For each control period in 2009 and thereafter, the Administrator will allocate CAIR NO_X Ozone Season allowances to CAIR NO_X Ozone Season units in a State that are not allocated CAIR NO_X Ozone Season allowances under paragraph (b) of this section because the units do not yet have a baseline heat input under paragraph (a) of this section or because the units have a baseline heat input but all CAIR NO_X Ozone Season allowances available under paragraph (b) of this section for the control period are already allocated, in accordance with the following procedures:

(1) The Administrator will establish a separate new unit set-aside for each control period. Each new unit set-aside will be allocated CAIR NO_X Ozone Season allowances equal to 5 percent for a control period in 2009 through 2014, and 3 percent for a control period in 2015 and thereafter, of the amount of tons of NO_X emissions in the applicable State trading budget under § 97.340.

(2) The CAIR designated representative of such a CAIR NO_X Ozone Season unit may submit to the Administrator a request, in a format specified by the Administrator, to be allocated CAIR NO_X Ozone Season allowances, starting with the later of the control period in 2009 or the first control period after the control period in which the CAIR NO_X Ozone Season unit commences commercial operation and until the first control period for which the unit is allocated CAIR NO_X Ozone Season allowances under paragraph (b) of this section. A separate CAIR NO_X Ozone Season allowance allocation request for each control period for which CAIR NO_X Ozone Season allowances are sought must be submitted on or before February 1 before such control period and after the date on which the CAIR NO_X Ozone Season unit commences commercial operation.

(3) In a CAIR NO_X Ozone Season allowance allocation request under paragraph (c)(2) of this section, the CAIR designated representative may request for a control period CAIR NO_X Ozone Season allowances in an amount not exceeding the CAIR NO_X Ozone Season unit(s total tons of NO_X emissions during the control period immediately before such control period.

(4) The Administrator will review each CAIR NO_X Ozone Season allowance allocation request under paragraph (c)(2) of this section and will allocate CAIR NO_X Ozone Season allowances for each control period pursuant to such request as follows:

(i) The Administrator will accept an allowance allocation request only if the request meets, or is adjusted by the Administrator as necessary to meet, the requirements of paragraphs (c)(2) and (3) of this section.

(ii) On or after February 1 before the control period, the Administrator will determine the sum of the CAIR NO_X Ozone Season allowances requested (as adjusted under paragraph (c)(4)(i) of this section) in all allowance allocation requests accepted under paragraph (c)(4)(i) of this section for the control period.

(iii) If the amount of CAIR NO_X Ozone Season allowances in the new unit set-aside for the control period is greater than or equal to the sum under paragraph (c)(4)(ii) of this section, then the Administrator will allocate the amount of CAIR NO_X Ozone Season allowances requested (as adjusted under paragraph (c)(4)(i) of this section) to each CAIR NO_X Ozone Season unit covered by an allowance allocation request accepted under paragraph (c)(4)(i) of this section.

(iv) If the amount of CAIR NO_X Ozone Season allowances in the new unit set-aside for the control period is less than the sum under paragraph (c)(4)(ii) of this section, then the Administrator will allocate to each CAIR NO_X Ozone Season unit covered by an allowance allocation request accepted under paragraph (c)(4)(i) of this section the amount of the CAIR NO_X Ozone Season allowances requested (as adjusted under paragraph (c)(4)(i) of this section), multiplied by the amount of CAIR NO_X Ozone Season allowances in the new unit set-aside for the control period, divided by the sum determined under paragraph (c)(4)(ii) of this section, and rounded to the nearest whole allowance as appropriate.

(v) The Administrator will notify each CAIR designated representative that submitted an allowance allocation request of the amount of CAIR NO_X Ozone Season allowances (if any) allocated for the control period to the CAIR NO_X Ozone Season unit covered by the request.

(d) If, after completion of the procedures under paragraph (c)(4) of this section for a control period, any unallocated CAIR NO_X Ozone Season allowances remain in the new unit set-aside under paragraph (c) of this section for a State for the control period, the Administrator will allocate to each CAIR NO_X Ozone Season unit that was allocated CAIR NO_X Ozone Season allowances under paragraph (b) of this section in the State an amount of CAIR NO_X Ozone Season allowances equal to the total amount of such remaining unallocated CAIR NO_X Ozone Season allowances, multiplied by the unit's allocation under paragraph (b) of this section, divided by 95 percent for a control period during 2009 through 2014, and 97 percent for a control period during 2015 and thereafter, of the amount of tons of NO_X emissions in the applicable State trading budget under § 97.340, and rounded to the nearest whole allowance as appropriate.

(e) If the Administrator determines that CAIR NO_X Ozone Season allowances were allocated under paragraphs (a) and (b) of this section, paragraphs (a) and (c) of this section, or paragraph (d) of this section for a control period and that the recipient of the allocation is not actually a CAIR NO_X Ozone Season unit under § 97.304 in such control period, then the Administrator will notify the CAIR designated representative and will act in accordance with the following procedures:

(1) Except as provided in paragraph (e)(2) or (3) of this section, the Administrator will not record such CAIR NO_X Ozone Season allowances under § 97.353.

(2) If the Administrator already recorded such CAIR NO_X Ozone Season allowances under § 97.353 and if the Administrator makes such determinations before making deductions for the source that includes such recipient under § 97.354(b) for the control period, then the Administrator will deduct from the account in which such CAIR NO_X Ozone Season allowances were recorded under § 97.353 an amount of CAIR NO_X Ozone Season allowances allocated for the same or a prior control period equal to the amount of such already recorded CAIR NO_X Ozone Season allowances. The CAIR designated representative shall ensure that there are sufficient CAIR NO_X Ozone Season allowances in such account for completion of the deduction.

(3) If the Administrator already recorded such CAIR NO_X Ozone Season allowances under § 97.353 and if the Administrator makes such determinations after making deductions for the source that includes such recipient under § 97.354(b) for the control period,

then the Administrator will apply paragraph (e)(1) or (2) of this section, as appropriate, to any subsequent control period for which CAIR NO_X Ozone Season allowances were allocated to such recipient.

(4) The Administrator will transfer the CAIR NO_X Ozone Season allowances that are not recorded, or that are deducted, in accordance with paragraphs (e)(1), (2), and (3) of this section to a new unit set-aside for the State in which such recipient is located.

§ 97.343 Alternative of allocation of CAIR NO_X Ozone Season allowances by permitting authority.

(a) Notwithstanding §§ 97.341, 97.342, and 97.353 if a State submits, and the Administrator approves, a State implementation plan revision in accordance with § 51.123(ee)(2) of this chapter providing for allocation of CAIR NO_X Ozone Season allowances by the permitting authority, then the permitting authority shall make such allocations in accordance with such approved State implementation plan revision, the Administrator will not make allocations under §§ 97.341 and 97.342 for the CAIR NO_X Ozone Season units in the State, and under § 97.353, the Administrator will record allocations made under such approved State implementation plan revision instead of allocations under §§ 97.341 and 97.342.

(b) In implementing paragraph (a) of this section and §§ 97.341, 97.342, and 97.353, the Administrator will ensure that the total amount of CAIR NO_X Ozone Season allowances allocated, under such provisions and under a State's State implementation plan revision approved in accordance with § 51.123(ee)(2) of this chapter, for a control period for CAIR NO_X Ozone Season sources in the State or for other entities specified by the permitting authority will not exceed the State's State trading budget for the year of the control period.

APPENDIX A TO SUBPART EEEE OF PART 97—STATES WITH APPROVED STATE IMPLEMENTATION PLAN REVISIONS CONCERNING ALLOCATIONS

The following States have State Implementation Plan revisions under § 51.123(ee)(2) of this chapter approved by the Administrator and providing for allocation of CAIR NO_X Ozone Season allowances by the permitting authority under § 97.343(a):

Indiana
Louisiana
Michigan
New Jersey
North Carolina
Ohio
South Carolina
Tennessee
West Virginia (for control periods 2009–2014)
Wisconsin

[65 FR 2727, Jan. 18, 2000, as amended at 72 FR 46394, Aug. 20, 2007; 72 FR 52293, Sept. 13, 2007; 72 FR 55068, Sept. 28, 2007; 72 FR 55659, 55672, Oct. 1, 2007; 72 FR 56920, Oct. 5, 2007; 72 FR 57215, Oct. 9, 2007; 72 FR 58546, Oct. 16, 2007; 72 FR 59487, Oct. 22, 2007; 72 FR 71579, Dec. 18, 2007; 72 FR 72263, Dec. 20, 2007; 73 FR 6041, Feb. 1, 2008]

Subpart FFFF—CAIR NO_X Ozone Season Allowance Tracking System

§ 97.350 [Reserved]

§ 97.351 Establishment of accounts.

(a) *Compliance accounts.* Except as provided in § 97.384(e), upon receipt of a complete certificate of representation under § 97.313, the Administrator will establish a compliance account for the CAIR NO_X Ozone Season source for which the certificate of representation was submitted, unless the source already has a compliance account.

(b) *General accounts*—(1) *Application for general account.* (i) Any person may apply to open a general account for the purpose of holding and transferring CAIR NO_X Ozone Season allowances. An application for a general account may designate one and only one CAIR authorized account representative and one and only one alternate CAIR authorized account representative who may act on behalf of the CAIR authorized account representative. The agreement by which the alternate CAIR authorized account representative is selected shall include a procedure for authorizing the alternate CAIR authorized account representative to act in lieu of the CAIR authorized account representative.

(ii) A complete application for a general account shall be submitted to the Administrator and shall include the

following elements in a format prescribed by the Administrator:

(A) Name, mailing address, e-mail address (if any), telephone number, and facsimile transmission number (if any) of the CAIR authorized account representative and any alternate CAIR authorized account representative;

(B) Organization name and type of organization, if applicable;

(C) A list of all persons subject to a binding agreement for the CAIR authorized account representative and any alternate CAIR authorized account representative to represent their ownership interest with respect to the CAIR NO_X Ozone Season allowances held in the general account;

(D) The following certification statement by the CAIR authorized account representative and any alternate CAIR authorized account representative: ''I certify that I was selected as the CAIR authorized account representative or the alternate CAIR authorized account representative, as applicable, by an agreement that is binding on all persons who have an ownership interest with respect to CAIR NO_X Ozone Season allowances held in the general account. I certify that I have all the necessary authority to carry out my duties and responsibilities under the CAIR NO_X Ozone Season Trading Program on behalf of such persons and that each such person shall be fully bound by my representations, actions, inactions, or submissions and by any order or decision issued to me by the Administrator or a court regarding the general account.''

(E) The signature of the CAIR authorized account representative and any alternate CAIR authorized account representative and the dates signed.

(iii) Unless otherwise required by the permitting authority or the Administrator, documents of agreement referred to in the application for a general account shall not be submitted to the permitting authority or the Administrator. Neither the permitting authority nor the Administrator shall be under any obligation to review or evaluate the sufficiency of such documents, if submitted.

(2) *Authorization of CAIR authorized account representative and alternate CAIR authorized account representative.*

(i) Upon receipt by the Administrator of a complete application for a general account under paragraph (b)(1) of this section:

(A) The Administrator will establish a general account for the person or persons for whom the application is submitted.

(B) The CAIR authorized account representative and any alternate CAIR authorized account representative for the general account shall represent and, by his or her representations, actions, inactions, or submissions, legally bind each person who has an ownership interest with respect to CAIR NO_X Ozone Season allowances held in the general account in all matters pertaining to the CAIR NO_X Ozone Season Trading Program, notwithstanding any agreement between the CAIR authorized account representative or any alternate CAIR authorized account representative and such person. Any such person shall be bound by any order or decision issued to the CAIR authorized account representative or any alternate CAIR authorized account representative by the Administrator or a court regarding the general account.

(C) Any representation, action, inaction, or submission by any alternate CAIR authorized account representative shall be deemed to be a representation, action, inaction, or submission by the CAIR authorized account representative.

(ii) Each submission concerning the general account shall be submitted, signed, and certified by the CAIR authorized account representative or any alternate CAIR authorized account representative for the persons having an ownership interest with respect to CAIR NO_X Ozone Season allowances held in the general account. Each such submission shall include the following certification statement by the CAIR authorized account representative or any alternate CAIR authorized account representative: ''I am authorized to make this submission on behalf of the persons having an ownership interest with respect to the CAIR NO_X Ozone Season allowances held in the general account. I certify under penalty of law that I have personally examined, and am familiar with, the statements and

information submitted in this document and all its attachments. Based on my inquiry of those individuals with primary responsibility for obtaining the information, I certify that the statements and information are to the best of my knowledge and belief true, accurate, and complete. I am aware that there are significant penalties for submitting false statements and information or omitting required statements and information, including the possibility of fine or imprisonment.''

(iii) The Administrator will accept or act on a submission concerning the general account only if the submission has been made, signed, and certified in accordance with paragraph (b)(2)(ii) of this section.

(3) *Changing CAIR authorized account representative and alternate CAIR authorized account representative; changes in persons with ownership interest.* (i) The CAIR authorized account representative for a general account may be changed at any time upon receipt by the Administrator of a superseding complete application for a general account under paragraph (b)(1) of this section. Notwithstanding any such change, all representations, actions, inactions, and submissions by the previous CAIR authorized account representative before the time and date when the Administrator receives the superseding application for a general account shall be binding on the new CAIR authorized account representative and the persons with an ownership interest with respect to the CAIR NO_X Ozone Season allowances in the general account.

(ii) The alternate CAIR authorized account representative for a general account may be changed at any time upon receipt by the Administrator of a superseding complete application for a general account under paragraph (b)(1) of this section. Notwithstanding any such change, all representations, actions, inactions, and submissions by the previous alternate CAIR authorized account representative before the time and date when the Administrator receives the superseding application for a general account shall be binding on the new alternate CAIR authorized account representative and the persons with an ownership interest with respect to the CAIR NO_X Ozone Season allowances in the general account.

(iii)(A) In the event a person having an ownership interest with respect to CAIR NO_X Ozone Season allowances in the general account is not included in the list of such persons in the application for a general account, such person shall be deemed to be subject to and bound by the application for a general account, the representation, actions, inactions, and submissions of the CAIR authorized account representative and any alternate CAIR authorized account representative of the account, and the decisions and orders of the Administrator or a court, as if the person were included in such list.

(B) Within 30 days following any change in the persons having an ownership interest with respect to CAIR NO_X Ozone Season allowances in the general account, including the addition of a new person, the CAIR authorized account representative or any alternate CAIR authorized account representative shall submit a revision to the application for a general account amending the list of persons having an ownership interest with respect to the CAIR NO_X Ozone Season allowances in the general account to include the change.

(4) *Objections concerning CAIR authorized account representative and alternate CAIR authorized account representative.* (i) Once a complete application for a general account under paragraph (b)(1) of this section has been submitted and received, the Administrator will rely on the application unless and until a superseding complete application for a general account under paragraph (b)(1) of this section is received by the Administrator.

(ii) Except as provided in paragraph (b)(3)(i) or (ii) of this section, no objection or other communication submitted to the Administrator concerning the authorization, or any representation, action, inaction, or submission of the CAIR authorized account representative or any alternate CAIR authorized account representative for a general account shall affect any representation, action, inaction, or submission of the CAIR authorized account representative or any alternate CAIR authorized account representative or the finality of any decision or

order by the Administrator under the CAIR NO_X Ozone Season Trading Program.

(iii) The Administrator will not adjudicate any private legal dispute concerning the authorization or any representation, action, inaction, or submission of the CAIR authorized account representative or any alternate CAIR authorized account representative for a general account, including private legal disputes concerning the proceeds of CAIR NO_X Ozone Season allowance transfers.

(5) *Delegation by CAIR authorized account representative and alternate CAIR authorized account representative.* (i) A CAIR authorized account representative may delegate, to one or more natural persons, his or her authority to make an electronic submission to the Administrator provided for or required under subparts FFFF and GGGG of this part.

(ii) An alternate CAIR authorized account representative may delegate, to one or more natural persons, his or her authority to make an electronic submission to the Administrator provided for or required under subparts FFFF and GGGG of this part.

(iii) In order to delegate authority to make an electronic submission to the Administrator in accordance with paragraph (b)(5)(i) or (ii) of this section, the CAIR authorized account representative or alternate CAIR authorized account representative, as appropriate, must submit to the Administrator a notice of delegation, in a format prescribed by the Administrator, that includes the following elements:

(A) The name, address, e-mail address, telephone number, and facsimile transmission number (if any) of such CAIR authorized account representative or alternate CAIR authorized account representative;

(B) The name, address, e-mail address, telephone number, and facsimile transmission number (if any) of each such natural person (referred to as an ''agent'');

(C) For each such natural person, a list of the type or types of electronic submissions under paragraph (b)(5)(i) or (ii) of this section for which authority is delegated to him or her;

(D) The following certification statement by such CAIR authorized account representative or alternate CAIR authorized account representative: ''I agree that any electronic submission to the Administrator that is by an agent identified in this notice of delegation and of a type listed for such agent in this notice of delegation and that is made when I am a CAIR authorized account representative or alternate CAIR authorized representative, as appropriate, and before this notice of delegation is superseded by another notice of delegation under 40 CFR 97.351(b)(5)(iv) shall be deemed to be an electronic submission by me.''; and

(E) The following certification statement by such CAIR authorized account representative or alternate CAIR authorized account representative: Until this notice of delegation is superseded by another notice of delegation under 40 CFR 97.351(b)(5)(iv), I agree to maintain an e-mail account and to notify the Administrator immediately of any change in my e-mail address unless all delegation of authority by me under 40 CFR 97.351(b)(5) is terminated.''.

(iv) A notice of delegation submitted under paragraph (b)(5)(iii) of this section shall be effective, with regard to the CAIR authorized account representative or alternate CAIR authorized account representative identified in such notice, upon receipt of such notice by the Administrator and until receipt by the Administrator of a superseding notice of delegation submitted by such CAIR authorized account representative or alternate CAIR authorized account representative, as appropriate. The superseding notice of delegation may replace any previously identified agent, add a new agent, or eliminate entirely any delegation of authority.

(v) Any electronic submission covered by the certification in paragraph (b)(5)(iii)(D) of this section and made in accordance with a notice of delegation effective under paragraph (b)(5)(iv) of this section shall be deemed to be an electronic submission by the CAIR designated representative or alternate CAIR designated representative submitting such notice of delegation.

(c) *Account identification.* The Administrator will assign a unique identifying number to each account established under paragraph (a) or (b) of this section.

§ 97.352 Responsibilities of CAIR authorized account representative.

Following the establishment of a CAIR NO_X Ozone Season Allowance Tracking System account, all submissions to the Administrator pertaining to the account, including, but not limited to, submissions concerning the deduction or transfer of CAIR NO_X Ozone Season allowances in the account, shall be made only by the CAIR authorized account representative for the account.

§ 97.353 Recordation of CAIR NO_X Ozone Season allowance allocations.

(a) By September 30, 2007, the Administrator will record in the CAIR NO_X Ozone Season sources compliance account the CAIR NO_X Ozone Season allowances allocated for the CAIR NO_X Ozone Season units at the source in accordance with § 97.342(a) and (b) for the control period in 2009.

(b) By September 30, 2008, the Administrator will record in the CAIR NO_X Ozone Season source's compliance account the CAIR NO_X Ozone Season allowances allocated for the CAIR NO_X Ozone Season units at the source in accordance with § 97.342(a) and (b) for the control period in 2010.

(c) By September 30, 2009, the Administrator will record in the CAIR NO_X Ozone Season source's compliance account the CAIR Ozone Season NO_X allowances allocated for the CAIR NO_X Ozone Season units at the source in accordance with § 97.342(a) and (b) for the control periods in 2011, 2012, and 2013.

(d) By December 1, 2010 and December 1 of each year thereafter, the Administrator will record in the CAIR NO_X Ozone Season source's compliance account the CAIR NO_X Ozone Season allowances allocated for the CAIR NO_X Ozone Season units at the source in accordance with § 97.342(a) and (b) for the control period in the fourth year after the year of the applicable deadline for recordation under this paragraph.

(e) By September 1, 2009 and September 1 of each year thereafter, the Administrator will record in the CAIR NO_X Ozone Season source's compliance account the CAIR NO_X Ozone Season allowances allocated for the CAIR NO_X Ozone Season units at the source in accordance with § 97.342(a) and (c) for the control period in the year of the applicable deadline for recordation under this paragraph.

(f) *Serial numbers for allocated CAIR NO_X Ozone Season allowances.* When recording the allocation of CAIR NO_X Ozone Season allowances for a CAIR NO_X Ozone Season unit in a compliance account, the Administrator will assign each CAIR NO_X Ozone Season allowance a unique identification number that will include digits identifying the year of the control period for which the CAIR NO_X Ozone Season allowance is allocated.

§ 97.354 Compliance with CAIR NO_X emissions limitation.

(a) *Allowance transfer deadline.* The CAIR NO_X Ozone Season allowances are available to be deducted for compliance with a source's CAIR NO_X Ozone Season emissions limitation for a control period in a given calendar year only if the CAIR NO_X Ozone Season allowances:

(1) Were allocated for the control period in the year or a prior year; and

(2) Are held in the compliance account as of the allowance transfer deadline for the control period or are transferred into the compliance account by a CAIR NO_X Ozone Season allowance transfer correctly submitted for recordation under §§ 97.360 and 97.361 by the allowance transfer deadline for the control period.

(b) *Deductions for compliance.* Following the recordation, in accordance with § 97.361, of CAIR NO_X Ozone Season allowance transfers submitted for recordation in a source's compliance account by the allowance transfer deadline for a control period, the Administrator will deduct from the compliance account CAIR NO_X Ozone Season allowances available under paragraph (a) of this section in order to determine whether the source meets the CAIR NO_X Ozone Season emissions limitation for the control period, as follows:

(1) Until the amount of CAIR NO_X Ozone Season allowances deducted

equals the number of tons of total nitrogen oxides emissions, determined in accordance with subpart HHHH of this part, from all CAIR NO_X Ozone Season units at the source for the control period; or

(2) If there are insufficient CAIR NO_X Ozone Season allowances to complete the deductions in paragraph (b)(1) of this section, until no more CAIR NO_X Ozone Season allowances available under paragraph (a) of this section remain in the compliance account.

(c)(1) *Identification of CAIR NO_X Ozone Season allowances by serial number.* The CAIR authorized account representative for a source's compliance account may request that specific CAIR NO_X Ozone Season allowances, identified by serial number, in the compliance account be deducted for emissions or excess emissions for a control period in accordance with paragraph (b) or (d) of this section. Such request shall be submitted to the Administrator by the allowance transfer deadline for the control period and include, in a format prescribed by the Administrator, the identification of the CAIR NO_X Ozone Season source and the appropriate serial numbers.

(2) *First-in, first-out.* The Administrator will deduct CAIR NO_X Ozone Season allowances under paragraph (b) or (d) of this section from the source's compliance account, in the absence of an identification or in the case of a partial identification of CAIR NO_X Ozone Season allowances by serial number under paragraph (c)(1) of this section, on a first-in, first-out (FIFO) accounting basis in the following order:

(i) Any CAIR NO_X Ozone Season allowances that were allocated to the units at the source, in the order of recordation; and then

(ii) Any CAIR NO_X Ozone Season allowances that were allocated to any entity and transferred and recorded in the compliance account pursuant to subpart GGGG of this part, in the order of recordation.

(d) *Deductions for excess emissions.* (1) After making the deductions for compliance under paragraph (b) of this section for a control period in a calendar year in which the CAIR NO_X Ozone Season source has excess emissions, the Administrator will deduct from the source's compliance account an amount of CAIR NO_X Ozone Season allowances, allocated for the control period in the immediately following calendar year, equal to 3 times the number of tons of the source's excess emissions.

(2) Any allowance deduction required under paragraph (d)(1) of this section shall not affect the liability of the owners and operators of the CAIR NO_X Ozone Season source or the CAIR NO_X Ozone Season units at the source for any fine, penalty, or assessment, or their obligation to comply with any other remedy, for the same violations, as ordered under the Clean Air Act or applicable State law.

(e) *Recordation of deductions.* The Administrator will record in the appropriate compliance account all deductions from such an account under paragraphs (b) and (d) of this section and subpart IIII.

(f) *Administrator(s action on submissions.* (1) The Administrator may review and conduct independent audits concerning any submission under the CAIR NO_X Ozone Season Trading Program and make appropriate adjustments of the information in the submissions.

(2) The Administrator may deduct CAIR NO_X Ozone Season allowances from or transfer CAIR NO_X Ozone Season allowances to a source's compliance account based on the information in the submissions, as adjusted under paragraph (f)(1) of this section, and record such deductions and transfers.

§ 97.355 Banking.

(a) CAIR NO_X Ozone Season allowances may be banked for future use or transfer in a compliance account or a general account in accordance with paragraph (b) of this section.

(b) Any CAIR NO_X Ozone Season allowance that is held in a compliance account or a general account will remain in such account unless and until the CAIR NO_X Ozone Season allowance is deducted or transferred under § 97.342, § 97.354, § 97.356, or subpart GGGG or IIII of this part.

§ 97.356 Account error.

The Administrator may, at his or her sole discretion and on his or her own

motion, correct any error in any CAIR NO_X Ozone Season Allowance Tracking System account. Within 10 business days of making such correction, the Administrator will notify the CAIR authorized account representative for the account.

§ 97.357 Closing of general accounts.

(a) The CAIR authorized account representative of a general account may submit to the Administrator a request to close the account, which shall include a correctly submitted allowance transfer under §§ 97.360 and 97.361 for any CAIR NO_X Ozone Season allowances in the account to one or more other CAIR NO_X Ozone Season Allowance Tracking System accounts.

(b) If a general account has no allowance transfers in or out of the account for a 12-month period or longer and does not contain any CAIR NO_X Ozone Season allowances, the Administrator may notify the CAIR authorized account representative for the account that the account will be closed following 20 business days after the notice is sent. The account will be closed after the 20-day period unless, before the end of the 20-day period, the Administrator receives a correctly submitted transfer of CAIR NO_X Ozone Season allowances into the account under §§ 97.360 and 97.361 or a statement submitted by the CAIR authorized account representative demonstrating to the satisfaction of the Administrator good cause as to why the account should not be closed.

Subpart GGGG—CAIR NO_X Ozone Season Allowance Transfers

§ 97.360 Submission of CAIR NO_X Ozone Season allowance transfers.

A CAIR authorized account representative seeking recordation of a CAIR NO_X Ozone Season allowance transfer shall submit the transfer to the Administrator. To be considered correctly submitted, the CAIR NO_X Ozone Season allowance transfer shall include the following elements, in a format specified by the Administrator:

(a) The account numbers for both the transferor and transferee accounts;

(b) The serial number of each CAIR NO_X Ozone Season allowance that is in the transferor account and is to be transferred; and

(c) The name and signature of the CAIR authorized account representative of the transferor account and the date signed.

§ 97.361 EPA recordation.

(a) Within 5 business days (except as provided in paragraph (b) of this section) of receiving a CAIR NO_X Ozone Season allowance transfer, the Administrator will record a CAIR NO_X Ozone Season allowance transfer by moving each CAIR NO_X Ozone Season allowance from the transferor account to the transferee account as specified by the request, provided that:

(1) The transfer is correctly submitted under § 97.360; and

(2) The transferor account includes each CAIR NO_X Ozone Season allowance identified by serial number in the transfer.

(b) A CAIR NO_X Ozone Season allowance transfer that is submitted for recordation after the allowance transfer deadline for a control period and that includes any CAIR NO_X Ozone Season allowances allocated for any control period before such allowance transfer deadline will not be recorded until after the Administrator completes the deductions under § 97.354 for the control period immediately before such allowance transfer deadline.

(c) Where a CAIR NO_X Ozone Season allowance transfer submitted for recordation fails to meet the requirements of paragraph (a) of this section, the Administrator will not record such transfer.

§ 97.362 Notification.

(a) *Notification of recordation.* Within 5 business days of recordation of a CAIR NO_X Ozone Season allowance transfer under § 97.361, the Administrator will notify the CAIR authorized account representatives of both the transferor and transferee accounts.

(b) *Notification of non-recordation.* Within 10 business days of receipt of a CAIR NO_X Ozone Season allowance transfer that fails to meet the requirements of § 97.361(a), the Administrator will notify the CAIR authorized account representatives of both accounts subject to the transfer of:

(1) A decision not to record the transfer, and

(2) The reasons for such non-recordation.

(c) Nothing in this section shall preclude the submission of a CAIR NO_X Ozone Season allowance transfer for recordation following notification of non-recordation.

Subpart HHHH—Monitoring and Reporting

§ 97.370 General requirements.

The owners and operators, and to the extent applicable, the CAIR designated representative, of a CAIR NO_X Ozone Season unit, shall comply with the monitoring, recordkeeping, and reporting requirements as provided in this subpart and in subpart H of part 75 of this chapter. For purposes of complying with such requirements, the definitions in § 97.302 and in § 72.2 of this chapter shall apply, and the terms ''affected unit,'' ''designated representative,'' and ''continuous emission monitoring system'' (or ''CEMS'') in part 75 of this chapter shall be deemed to refer to the terms ''CAIR NO_X Ozone Season unit,'' ''CAIR designated representative,'' and ''continuous emission monitoring system'' (or ''CEMS'') respectively, as defined in § 97.302. The owner or operator of a unit that is not a CAIR NO_X Ozone Season unit but that is monitored under § 75.72(b)(2)(ii) of this chapter shall comply with the same monitoring, recordkeeping, and reporting requirements as a CAIR NO_X Ozone Season unit.

(a) *Requirements for installation, certification, and data accounting.* The owner or operator of each CAIR NO_X Ozone Season unit shall:

(1) Install all monitoring systems required under this subpart for monitoring NO_X mass emissions and individual unit heat input (including all systems required to monitor NO_X emission rate, NO_X concentration, stack gas moisture content, stack gas flow rate, CO_2 or O_2 concentration, and fuel flow rate, as applicable, in accordance with §§ 75.71 and 75.72 of this chapter);

(2) Successfully complete all certification tests required under § 97.371 and meet all other requirements of this subpart and part 75 of this chapter applicable to the monitoring systems under paragraph (a)(1) of this section; and

(3) Record, report, and quality-assure the data from the monitoring systems under paragraph (a)(1) of this section.

(b) *Compliance deadlines.* Except as provided in paragraph (e) of this section, the owner or operator shall meet the monitoring system certification and other requirements of paragraphs (a)(1) and (2) of this section on or before the following dates. The owner or operator shall record, report, and quality-assure the data from the monitoring systems under paragraph (a)(1) of this section on and after the following dates.

(1) For the owner or operator of a CAIR NO_X Ozone Season unit that commences commercial operation before July 1, 2007, by May 1, 2008.

(2) For the owner or operator of a CAIR NO_X Ozone Season unit that commences commercial operation on or after July 1, 2007 and that reports on an annual basis under § 97.374(d), by the later of the following dates:

(i) 90 unit operating days or 180 calendar days, whichever occurs first, after the date on which the unit commences commercial operation; or

(ii) May 1, 2008.

(3) For the owner or operator of a CAIR NO_X Ozone Season unit that commences commercial operation on or after July 1, 2007 and that reports on a control period basis under § 97.374(d)(2)(ii), by the later of the following dates:

(i) 90 unit operating days or 180 calendar days, whichever occurs first, after the date on which the unit commences commercial operation; or

(ii) If the compliance date under paragraph (b)(3)(i) of this section is not during a control period, May 1 immediately following the compliance date under paragraph (b)(3)(i) of this section.

(4) For the owner or operator of a CAIR NO_X Ozone Season unit for which construction of a new stack or flue or installation of add-on NO_X emission controls is completed after the applicable deadline under paragraph (b)(1), (2), (6), or (7) of this section and that reports on an annual basis under § 97.374(d), by 90 unit operating days or

180 calendar days, whichever occurs first, after the date on which emissions first exit to the atmosphere through the new stack or flue or add-on NO_X emissions controls.

(5) For the owner or operator of a CAIR NO_X Ozone Season unit for which construction of a new stack or flue or installation of add-on NO_X emission controls is completed after the applicable deadline under paragraph (b)(1), (3), (6), or (7) of this section and that reports on a control period basis under § 97.374(d)(2)(ii), by the later of the following dates:

(i) 90 unit operating days or 180 calendar days, whichever occurs first, after the date on which emissions first exit to the atmosphere through the new stack or flue or add-on NO_X emissions controls; or

(ii) If the compliance date under paragraph (b)(5)(i) of this section is not during a control period, May 1 immediately following the compliance date under paragraph (b)(5)(i) of this section.

(6) Notwithstanding the dates in paragraphs (b)(1), (2), and (3) of this section, for the owner or operator of a unit for which a CAIR NO_X Ozone Season opt-in permit application is submitted and not withdrawn and a CAIR opt-in permit is not yet issued or denied under subpart IIII of this part, by the date specified in § 97.384(b).

(7) Notwithstanding the dates in paragraphs (b)(1), (2), and (3) of this section, for the owner or operator of a CAIR NO_X Ozone Season opt-in unit under subpart IIII of this part, by the date on which the CAIR NO_X Ozone Season opt-in unit enters the CAIR NO_X Ozone Season Trading Program as provided in § 97.384(g).

(c) *Reporting data.* The owner or operator of a CAIR NO_X Ozone Season unit that does not meet the applicable compliance date set forth in paragraph (b) of this section for any monitoring system under paragraph (a)(1) of this section shall, for each such monitoring system, determine, record, and report maximum potential (or, as appropriate, minimum potential) values for NO_X concentration, NO_X emission rate, stack gas flow rate, stack gas moisture content, fuel flow rate, and any other parameters required to determine NO_X mass emissions and heat input in accordance with § 75.31(b)(2) or (c)(3) of this chapter, section 2.4 of appendix D to part 75 of this chapter, or section 2.5 of appendix E to part 75 of this chapter, as applicable.

(d) *Prohibitions.* (1) No owner or operator of a CAIR NO_X Ozone Season unit shall use any alternative monitoring system, alternative reference method, or any other alternative to any requirement of this subpart without having obtained prior written approval in accordance with § 97.375.

(2) No owner or operator of a CAIR NO_X Ozone Season unit shall operate the unit so as to discharge, or allow to be discharged, NO_X emissions to the atmosphere without accounting for all such emissions in accordance with the applicable provisions of this subpart and part 75 of this chapter.

(3) No owner or operator of a CAIR NO_X Ozone Season unit shall disrupt the continuous emission monitoring system, any portion thereof, or any other approved emission monitoring method, and thereby avoid monitoring and recording NO_X mass emissions discharged into the atmosphere or heat input, except for periods of recertification or periods when calibration, quality assurance testing, or maintenance is performed in accordance with the applicable provisions of this subpart and part 75 of this chapter.

(4) No owner or operator of a CAIR NO_X Ozone Season unit shall retire or permanently discontinue use of the continuous emission monitoring system, any component thereof, or any other approved monitoring system under this subpart, except under any one of the following circumstances:

(i) During the period that the unit is covered by an exemption under § 97.305 that is in effect;

(ii) The owner or operator is monitoring emissions from the unit with another certified monitoring system approved, in accordance with the applicable provisions of this subpart and part 75 of this chapter, by the Administrator for use at that unit that provides emission data for the same pollutant or parameter as the retired or discontinued monitoring system; or

(iii) The CAIR designated representative submits notification of the date of

certification testing of a replacement monitoring system for the retired or discontinued monitoring system in accordance with § 97.371(d)(3)(i).

(e) *Long-term cold storage.* The owner or operator of a CAIR NO_X Ozone Season unit is subject to the applicable provisions of part 75 of this chapter concerning units in long-term cold storage.

§ 97.371 Initial certification and recertification procedures.

(a) The owner or operator of a CAIR NO_X Ozone Season unit shall be exempt from the initial certification requirements of this section for a monitoring system under § 97.370(a)(1) if the following conditions are met:

(1) The monitoring system has been previously certified in accordance with part 75 of this chapter; and

(2) The applicable quality-assurance and quality-control requirements of § 75.21 of this chapter and appendix B, appendix D, and appendix E to part 75 of this chapter are fully met for the certified monitoring system described in paragraph (a)(1) of this section.

(b) The recertification provisions of this section shall apply to a monitoring system under § 97.370(a)(1) exempt from initial certification requirements under paragraph (a) of this section.

(c) If the Administrator has previously approved a petition under § 75.17(a) or (b) of this chapter for apportioning the NO_X emission rate measured in a common stack or a petition under § 75.66 of this chapter for an alternative to a requirement in § 75.12 or § 75.17 of this chapter, the CAIR designated representative shall resubmit the petition to the Administrator under § 97.375 to determine whether the approval applies under the CAIR NO_X Ozone Season Trading Program.

(d) Except as provided in paragraph (a) of this section, the owner or operator of a CAIR NO_X Ozone Season unit shall comply with the following initial certification and recertification procedures for a continuous monitoring system (*i.e.*, a continuous emission monitoring system and an excepted monitoring system under appendices D and E to part 75 of this chapter) under § 97.370(a)(1). The owner or operator of a unit that qualifies to use the low mass emissions excepted monitoring methodology under § 75.19 of this chapter or that qualifies to use an alternative monitoring system under subpart E of part 75 of this chapter shall comply with the procedures in paragraph (e) or (f) of this section respectively.

(1) *Requirements for initial certification.* The owner or operator shall ensure that each continuous monitoring system under § 97.370(a)(1) (including the automated data acquisition and handling system) successfully completes all of the initial certification testing required under § 75.20 of this chapter by the applicable deadline in § 97.370(b). In addition, whenever the owner or operator installs a monitoring system to meet the requirements of this subpart in a location where no such monitoring system was previously installed, initial certification in accordance with § 75.20 of this chapter is required.

(2) *Requirements for recertification.* Whenever the owner or operator makes a replacement, modification, or change in any certified continuous emission monitoring system under § 97.370(a)(1) that may significantly affect the ability of the system to accurately measure or record NO_X mass emissions or heat input rate or to meet the quality-assurance and quality-control requirements of § 75.21 of this chapter or appendix B to part 75 of this chapter, the owner or operator shall recertify the monitoring system in accordance with § 75.20(b) of this chapter. Furthermore, whenever the owner or operator makes a replacement, modification, or change to the flue gas handling system or the unit's operation that may significantly change the stack flow or concentration profile, the owner or operator shall recertify each continuous emission monitoring system whose accuracy is potentially affected by the change, in accordance with § 75.20(b) of this chapter. Examples of changes to a continuous emission monitoring system that require recertification include: replacement of the analyzer, complete replacement of an existing continuous emission monitoring system, or change in location or orientation of the sampling probe or site. Any fuel flowmeter systems, and any excepted NO_X monitoring system under appendix E to part

75 of this chapter, under § 97.370(a)(1) are subject to the recertification requirements in § 75.20(g)(6) of this chapter.

(3) *Approval process for initial certification and recertification.* Paragraphs (d)(3)(i) through (iv) of this section apply to both initial certification and recertification of a continuous monitoring system under § 97.370(a)(1). For recertifications, replace the words ''certification'' and ''initial certification'' with the word ''recertification'', replace the word ''certified'' with the word ''recertified,'' and follow the procedures in §§ 75.20(b)(5) and (g)(7) of this chapter in lieu of the procedures in paragraph (d)(3)(v) of this section.

(i) *Notification of certification.* The CAIR designated representative shall submit to the appropriate EPA Regional Office and the Administrator written notice of the dates of certification testing, in accordance with § 97.373.

(ii) *Certification application.* The CAIR designated representative shall submit to the Administrator a certification application for each monitoring system. A complete certification application shall include the information specified in § 75.63 of this chapter.

(iii) *Provisional certification date.* The provisional certification date for a monitoring system shall be determined in accordance with § 75.20(a)(3) of this chapter. A provisionally certified monitoring system may be used under the CAIR NO_X Ozone Season Trading Program for a period not to exceed 120 days after receipt by the Administrator of the complete certification application for the monitoring system under paragraph (d)(3)(ii) of this section. Data measured and recorded by the provisionally certified monitoring system, in accordance with the requirements of part 75 of this chapter, will be considered valid quality-assured data (retroactive to the date and time of provisional certification), provided that the Administrator does not invalidate the provisional certification by issuing a notice of disapproval within 120 days of the date of receipt of the complete certification application by the Administrator.

(iv) *Certification application approval process.* The Administrator will issue a written notice of approval or disapproval of the certification application to the owner or operator within 120 days of receipt of the complete certification application under paragraph (d)(3)(ii) of this section. In the event the Administrator does not issue such a notice within such 120-day period, each monitoring system that meets the applicable performance requirements of part 75 of this chapter and is included in the certification application will be deemed certified for use under the CAIR NO_X Ozone Season Trading Program.

(A) *Approval notice.* If the certification application is complete and shows that each monitoring system meets the applicable performance requirements of part 75 of this chapter, then the Administrator will issue a written notice of approval of the certification application within 120 days of receipt.

(B) *Incomplete application notice.* If the certification application is not complete, then the Administrator will issue a written notice of incompleteness that sets a reasonable date by which the CAIR designated representative must submit the additional information required to complete the certification application. If the CAIR designated representative does not comply with the notice of incompleteness by the specified date, then the Administrator may issue a notice of disapproval under paragraph (d)(3)(iv)(C) of this section. The 120-day review period shall not begin before receipt of a complete certification application.

(C) *Disapproval notice.* If the certification application shows that any monitoring system does not meet the performance requirements of part 75 of this chapter or if the certification application is incomplete and the requirement for disapproval under paragraph (d)(3)(iv)(B) of this section is met, then the Administrator will issue a written notice of disapproval of the certification application. Upon issuance of such notice of disapproval, the provisional certification is invalidated by the Administrator and the data measured and recorded by each uncertified monitoring system shall not be considered valid quality-assured data beginning with the date and hour

of provisional certification (as defined under § 75.20(a)(3) of this chapter). The owner or operator shall follow the procedures for loss of certification in paragraph (d)(3)(v) of this section for each monitoring system that is disapproved for initial certification.

(D) *Audit decertification.* The Administrator may issue a notice of disapproval of the certification status of a monitor in accordance with § 97.372(b).

(v) *Procedures for loss of certification.* If the Administrator issues a notice of disapproval of a certification application under paragraph (d)(3)(iv)(C) of this section or a notice of disapproval of certification status under paragraph (d)(3)(iv)(D) of this section, then:

(A) The owner or operator shall substitute the following values, for each disapproved monitoring system, for each hour of unit operation during the period of invalid data specified under § 75.20(a)(4)(iii), § 75.20(g)(7), or § 75.21(e) of this chapter and continuing until the applicable date and hour specified under § 75.20(a)(5)(i) or (g)(7) of this chapter:

(*1*) For a disapproved NO_X emission rate (*i.e.,* NO_X-diluent) system, the maximum potential NO_X emission rate, as defined in (72.2 of this chapter.

(*2*) For a disapproved NO_X pollutant concentration monitor and disapproved flow monitor, respectively, the maximum potential concentration of NO_X and the maximum potential flow rate, as defined in sections 2.1.2.1 and 2.1.4.1 of appendix A to part 75 of this chapter.

(*3*) For a disapproved moisture monitoring system and disapproved diluent gas monitoring system, respectively, the minimum potential moisture percentage and either the maximum potential CO_2 concentration or the minimum potential O_2 concentration (as applicable), as defined in sections 2.1.5, 2.1.3.1, and 2.1.3.2 of appendix A to part 75 of this chapter.

(*4*) For a disapproved fuel flowmeter system, the maximum potential fuel flow rate, as defined in section 2.4.2.1 of appendix D to part 75 of this chapter.

(*5*) For a disapproved excepted NO_X monitoring system under appendix E to part 75 of this chapter, the fuel-specific maximum potential NO_X emission rate, as defined in (72.2 of this chapter.

(B) The CAIR designated representative shall submit a notification of certification retest dates and a new certification application in accordance with paragraphs (d)(3)(i) and (ii) of this section.

(C) The owner or operator shall repeat all certification tests or other requirements that were failed by the monitoring system, as indicated in the Administrator's notice of disapproval, no later than 30 unit operating days after the date of issuance of the notice of disapproval.

(e) *Initial certification and recertification procedures for units using the low mass emission excepted methodology under § 75.19 of this chapter.* The owner or operator of a unit qualified to use the low mass emissions (LME) excepted methodology under § 75.19 of this chapter shall meet the applicable certification and recertification requirements in §§ 75.19(a)(2) and 75.20(h) of this chapter. If the owner or operator of such a unit elects to certify a fuel flowmeter system for heat input determination, the owner or operator shall also meet the certification and recertification requirements in § 75.20(g) of this chapter.

(f) *Certification/recertification procedures for alternative monitoring systems.* The CAIR designated representative of each unit for which the owner or operator intends to use an alternative monitoring system approved by the Administrator under subpart E of part 75 of this chapter shall comply with the applicable notification and application procedures of § 75.20(f) of this chapter.

[65 FR 2727, Jan 18, 2000, as amended by 71 FR 74795, Dec. 13, 2006]

§ 97.372 Out of control periods.

(a) Whenever any monitoring system fails to meet the quality-assurance and quality-control requirements or data validation requirements of part 75 of this chapter, data shall be substituted using the applicable missing data procedures in subpart D or subpart H of, or appendix D or appendix E to, part 75 of this chapter.

(b) *Audit decertification.* Whenever both an audit of a monitoring system and a review of the initial certification or recertification application reveal that any monitoring system should not

have been certified or recertified because it did not meet a particular performance specification or other requirement under § 97.371 or the applicable provisions of part 75 of this chapter, both at the time of the initial certification or recertification application submission and at the time of the audit, the Administrator will issue a notice of disapproval of the certification status of such monitoring system. For the purposes of this paragraph, an audit shall be either a field audit or an audit of any information submitted to the permitting authority or the Administrator. By issuing the notice of disapproval, the Administrator revokes prospectively the certification status of the monitoring system. The data measured and recorded by the monitoring system shall not be considered valid quality-assured data from the date of issuance of the notification of the revoked certification status until the date and time that the owner or operator completes subsequently approved initial certification or recertification tests for the monitoring system. The owner or operator shall follow the applicable initial certification or recertification procedures in § 97.371 for each disapproved monitoring system.

§ 97.373 Notifications.

The CAIR designated representative for a CAIR NO_X Ozone Season unit shall submit written notice to the Administrator in accordance with § 75.61 of this chapter.

§ 97.374 Recordkeeping and reporting.

(a) *General provisions*. The CAIR designated representative shall comply with all recordkeeping and reporting requirements in this section, the applicable recordkeeping and reporting requirements under § 75.73 of this chapter, and the requirements of § 97.310(e)(1).

(b) *Monitoring Plans*. The owner or operator of a CAIR NO_X Ozone Season unit shall comply with requirements of § 75.73 (c) and (e) of this chapter and, for a unit for which a CAIR opt-in permit application is submitted and not withdrawn and a CAIR opt-in permit is not yet issued or denied under subpart IIII of this part, §§ 97.383 and 97.384(a).

(c) *Certification Applications*. The CAIR designated representative shall submit an application to the Administrator within 45 days after completing all initial certification or recertification tests required under § 97.371, including the information required under § 75.63 of this chapter.

(d) *Quarterly reports*. The CAIR designated representative shall submit quarterly reports, as follows:

(1) If the CAIR NO_X Ozone Season unit is subject to an Acid Rain emissions limitation or a CAIR NO_X emissions limitation or if the owner or operator of such unit chooses to report on an annual basis under this subpart, the CAIR designated representative shall meet the requirements of subpart H of part 75 of this chapter (concerning monitoring of NO_X mass emissions) for such unit for the entire year and shall report the NO_X mass emissions data and heat input data for such unit, in an electronic quarterly report in a format prescribed by the Administrator, for each calendar quarter beginning with:

(i) For a unit that commences commercial operation before July 1, 2007, the calendar quarter covering May 1, 2008 through June 30, 2008;

(ii) For a unit that commences commercial operation on or after July 1, 2007, the calendar quarter corresponding to the earlier of the date of provisional certification or the applicable deadline for initial certification under § 97.370(b), unless that quarter is the third or fourth quarter of 2007 or the first quarter of 2008, in which case reporting shall commence in the quarter covering May 1, 2008 through June 30, 2008;

(iii) Notwithstanding paragraphs (d)(1) (i) and (ii) of this section, for a unit for which a CAIR opt-in permit application is submitted and not withdrawn and a CAIR opt-in permit is not yet issued or denied under subpart IIII of this part, the calendar quarter corresponding to the date specified in § 97.384(b); and

(iv) Notwithstanding paragraphs (d)(1) (i) and (ii) of this section, for a CAIR NO_X Ozone Season opt-in unit under subpart IIII of this part, the calendar quarter corresponding to the date on which the CAIR NO_X Ozone Season opt-in unit enters the CAIR

NO_X Ozone Season Trading Program as provided in § 97.384(g).

(2) If the CAIR NO_X Ozone Season unit is not subject to an Acid Rain emissions limitation or a CAIR NO_X emissions limitation, then the CAIR designated representative shall either:

(i) Meet the requirements of subpart H of part 75 (concerning monitoring of NO_X mass emissions) for such unit for the entire year and report the NO_X mass emissions data and heat input data for such unit in accordance with paragraph (d)(1) of this section; or

(ii) Meet the requirements of subpart H of part 75 for the control period (including the requirements in § 75.74(c) of this chapter) and report NO_X mass emissions data and heat input data (including the data described in § 75.74(c)(6) of this chapter) for such unit only for the control period of each year and report, in an electronic quarterly report in a format prescribed by the Administrator, for each calendar quarter beginning with:

(A) For a unit that commences commercial operation before July 1, 2007, the calendar quarter covering May 1, 2008 through June 30, 2008;

(B) For a unit that commences commercial operation on or after July 1, 2007, the calendar quarter corresponding to the earlier of the date of provisional certification or the applicable deadline for initial certification under § 97.370(b), unless that date is not during a control period, in which case reporting shall commence in the quarter that includes May 1 through June 30 of the first control period after such date;

(C) Notwithstanding paragraphs (d)(2)(ii)(A) and (2)(ii)(B) of this section, for a unit for which a CAIR opt-in permit application is submitted and not withdrawn and a CAIR opt-in permit is not yet issued or denied under subpart IIII of this part, the calendar quarter corresponding to the date specified in § 97.384(b); and

(D) Notwithstanding paragraphs (d)(2)(ii)(A) and (2)(ii)(B) of this section, for a CAIR NO_X Ozone Season opt-in unit under subpart IIII of this part, the calendar quarter corresponding to the date on which the CAIR NO_X Ozone Season opt-in unit enters the CAIR NO_X Ozone Season Trading Program as provided in § 97.384(g).

(3) The CAIR designated representative shall submit each quarterly report to the Administrator within 30 days following the end of the calendar quarter covered by the report. Quarterly reports shall be submitted in the manner specified in § 75.73(f) of this chapter.

(4) For CAIR NO_X Ozone Season units that are also subject to an Acid Rain emissions limitation or the CAIR NO_X Annual Trading Program, CAIR SO_2 Trading Program, or Hg Budget Trading Program, quarterly reports shall include the applicable data and information required by subparts F through I of part 75 of this chapter as applicable, in addition to the NO_X mass emission data, heat input data, and other information required by this subpart.

(e) *Compliance certification*. The CAIR designated representative shall submit to the Administrator a compliance certification (in a format prescribed by the Administrator) in support of each quarterly report based on reasonable inquiry of those persons with primary responsibility for ensuring that all of the unit's emissions are correctly and fully monitored. The certification shall state that:

(1) The monitoring data submitted were recorded in accordance with the applicable requirements of this subpart and part 75 of this chapter, including the quality assurance procedures and specifications;

(2) For a unit with add-on NO_X emission controls and for all hours where NO_X data are substituted in accordance with § 75.34(a)(1) of this chapter, the add-on emission controls were operating within the range of parameters listed in the quality assurance/quality control program under appendix B to part 75 of this chapter and the substitute data values do not systematically underestimate NO_X emissions; and

(3) For a unit that is reporting on a control period basis under paragraph (d)(2)(ii) of this section, the NO_X emission rate and NO_X concentration values substituted for missing data under subpart D of part 75 of this chapter are calculated using only values from a control period and do not systematically underestimate NO_X emissions.

§ 97.375 Petitions.

The CAIR designated representative of a CAIR NO_X Ozone Season unit may submit a petition under § 75.66 of this chapter to the Administrator requesting approval to apply an alternative to any requirement of this subpart. Application of an alternative to any requirement of this subpart is in accordance with this subpart only to the extent that the petition is approved in writing by the Administrator, in consultation with the permitting authority.

Subpart IIII—CAIR NO_X Ozone Season Opt-in Units

§ 97.380 Applicability.

A CAIR NO_X Ozone Season opt-in unit must be a unit that:

(a) Is located in a State that submits, and for which the Administrator approves, a State implementation plan revision in accordance with § 51.123(ee)(3) (i), (ii), or (iii) of this chapter establishing procedures concerning CAIR Ozone Season opt-in units;

(b) Is not a CAIR NO_X Ozone Season unit under § 97.304 and is not covered by a retired unit exemption under § 97.305 that is in effect;

(c) Is not covered by a retired unit exemption under § 72.8 of this chapter that is in effect;

(d) Has or is required or qualified to have a title V operating permit or other federally enforceable permit; and

(e) Vents all of its emissions to a stack and can meet the monitoring, recordkeeping, and reporting requirements of subpart HHHH of this part.

§ 97.381 General.

(a) Except as otherwise provided in §§ 97.301 through 97.304, §§ 97.306 through 97.308, and subparts BBBB and CCCC and subparts FFFF through HHHH of this part, a CAIR NO_X Ozone Season opt-in unit shall be treated as a CAIR NO_X Ozone Season unit for purposes of applying such sections and subparts of this part.

(b) Solely for purposes of applying, as provided in this subpart, the requirements of subpart HHHH of this part to a unit for which a CAIR opt-in permit application is submitted and not withdrawn and a CAIR opt-in permit is not yet issued or denied under this subpart, such unit shall be treated as a CAIR NO_X Ozone Season unit before issuance of a CAIR opt-in permit for such unit.

§ 97.382 CAIR designated representative.

Any CAIR NO_X Ozone Season opt-in unit, and any unit for which a CAIR opt-in permit application is submitted and not withdrawn and a CAIR opt-in permit is not yet issued or denied under this subpart, located at the same source as one or more CAIR NO_X Ozone Season units shall have the same CAIR designated representative and alternate CAIR designated representative as such CAIR NO_X Ozone Season units.

§ 97.383 Applying for CAIR opt-in permit.

(a) *Applying for initial CAIR opt-in permit.* The CAIR designated representative of a unit meeting the requirements for a CAIR NO_X Ozone Season opt-in unit in § 97.380 may apply for an initial CAIR opt-in permit at any time, except as provided under § 97.386 (f) and (g), and, in order to apply, must submit the following:

(1) A complete CAIR permit application under § 97.322;

(2) A certification, in a format specified by the permitting authority, that the unit:

(i) Is not a CAIR NO_X Ozone Season unit under § 97.304 and is not covered by a retired unit exemption under § 97.305 that is in effect;

(ii) Is not covered by a retired unit exemption under § 72.8 of this chapter that is in effect;

(iii) Vents all of its emissions to a stack; and

(iv) Has documented heat input for more than 876 hours during the 6 months immediately preceding submission of the CAIR permit application under § 97.322;

(3) A monitoring plan in accordance with subpart HHHH of this part;

(4) A complete certificate of representation under § 97.313 consistent with § 97.382, if no CAIR designated representative has been previously designated for the source that includes the unit; and

(5) A statement, in a format specified by the permitting authority, whether the CAIR designated representative requests that the unit be allocated CAIR NO_X Ozone Season allowances under § 97.380(b) or § 97.388(c) (subject to the conditions in §§ 97.384(h) and 97.386(g)), to the extent such allocation is provided in a State implementation plan revision submitted in accordance with § 51.123(ee)(3)(i), (ii), or (iii) of this chapter and approved by the Administrator. If allocation under § 97.388(c) is requested, this statement shall include a statement that the owners and operators intend to repower the unit before January 1, 2015 and that they will provide, upon request, documentation demonstrating such intent.

(b) *Duty to reapply.* (1) The CAIR designated representative of a CAIR NO_X Ozone Season opt-in unit shall submit a complete CAIR permit application under § 97.322 to renew the CAIR opt-in unit permit in accordance with the permitting authority's regulations for title V operating permits, or the permitting authority's regulations for other federally enforceable permits if applicable, addressing permit renewal.

(2) Unless the permitting authority issues a notification of acceptance of withdrawal of the CAIR NO_X Ozone Season opt-in unit from the CAIR NO_X Ozone Season Trading Program in accordance with § 97.386 or the unit becomes a CAIR NO_X Ozone Season unit under § 97.304, the CAIR NO_X Ozone Season opt-in unit shall remain subject to the requirements for a CAIR NO_X Ozone Season opt-in unit, even if the CAIR designated representative for the CAIR NO_X Ozone Season opt-in unit fails to submit a CAIR permit application that is required for renewal of the CAIR opt-in permit under paragraph (b)(1) of this section.

§ 97.384 Opt-in process.

The permitting authority will issue or deny a CAIR opt-in permit for a unit for which an initial application for a CAIR opt-in permit under § 97.383 is submitted in accordance with the following, to the extent provided in a State implementation plan revision submitted in accordance with § 51.123(ee)(3)(i), (ii), or (iii) of this chapter and approved by the Administrator:

(a) *Interim review of monitoring plan.* The permitting authority and the Administrator will determine, on an interim basis, the sufficiency of the monitoring plan accompanying the initial application for a CAIR opt-in permit under § 97.383. A monitoring plan is sufficient, for purposes of interim review, if the plan appears to contain information demonstrating that the NO_X emissions rate and heat input of the unit and all other applicable parameters are monitored and reported in accordance with subpart HHHH of this part. A determination of sufficiency shall not be construed as acceptance or approval of the monitoring plan.

(b) *Monitoring and reporting.* (1)(i) If the permitting authority and the Administrator determine that the monitoring plan is sufficient under paragraph (a) of this section, the owner or operator shall monitor and report the NO_X emissions rate and the heat input of the unit and all other applicable parameters, in accordance with subpart HHHH of this part, starting on the date of certification of the appropriate monitoring systems under subpart HHHH of this part and continuing until a CAIR opt-in permit is denied under § 97.384(f) or, if a CAIR opt-in permit is issued, the date and time when the unit is withdrawn from the CAIR NO_X Ozone Season Trading Program in accordance with § 97.386.

(ii) The monitoring and reporting under paragraph (b)(1)(i) of this section shall include the entire control period immediately before the date on which the unit enters the CAIR NO_X Ozone Season Trading Program under § 97.384(g), during which period monitoring system availability must not be less than 90 percent under subpart HHHH of this part and the unit must be in full compliance with any applicable State or Federal emissions or emissions-related requirements.

(2) To the extent the NO_X emissions rate and the heat input of the unit are monitored and reported in accordance with subpart HHHH of this part for one or more control periods, in addition to the control period under paragraph (b)(1)(ii) of this section, during which control periods monitoring system

availability is not less than 90 percent under subpart HHHH of this part and the unit is in full compliance with any applicable State or Federal emissions or emissions-related requirements and which control periods begin not more than 3 years before the unit enters the CAIR NO_X Ozone Season Trading Program under § 97.384(g), such information shall be used as provided in paragraphs (c) and (d) of this section.

(c) *Baseline heat input.* The unit's baseline heat input shall equal:

(1) If the unit's NO_X emissions rate and heat input are monitored and reported for only one control period, in accordance with paragraph (b)(1) of this section, the unit's total heat input (in mmBtu) for the control period; or

(2) If the unit's NO_X emissions rate and heat input are monitored and reported for more than one control period, in accordance with paragraphs (b)(1) and (2) of this section, the average of the amounts of the unit's total heat input (in mmBtu) for the control periods under paragraphs (b)(1)(ii) and (2) of this section.

(d) *Baseline NO_X emission rate.* The unit's baseline NO_X emission rate shall equal:

(1) If the unit's NO_X emissions rate and heat input are monitored and reported for only one control period, in accordance with paragraph (b)(1) of this section, the unit's NO_X emissions rate (in lb/mmBtu) for the control period;

(2) If the unit's NO_X emissions rate and heat input are monitored and reported for more than one control period, in accordance with paragraphs (b)(1) and (2) of this section, and the unit does not have add-on NO_X emission controls during any such control periods, the average of the amounts of the unit's NO_X emissions rate (in lb/mmBtu) for the control periods under paragraphs (b)(1)(ii) and (2) of this section; or

(3) If the unit's NO_X emissions rate and heat input are monitored and reported for more than one control period, in accordance with paragraphs (b)(1) and (2) of this section, and the unit has add-on NO_X emission controls during any such control periods, the average of the amounts of the unit's NO_X emissions rate (in lb/mmBtu) for such control periods during which the unit has add-on NO_X emission controls.

(e) *Issuance of CAIR opt-in permit.* After calculating the baseline heat input and the baseline NO_X emissions rate for the unit under paragraphs (c) and (d) of this section and if the permitting authority determines that the CAIR designated representative shows that the unit meets the requirements for a CAIR NO_X Ozone Season opt-in unit in § 97.380 and meets the elements certified in § 97.383(a)(2), the permitting authority will issue a CAIR opt-in permit. The permitting authority will provide a copy of the CAIR opt-in permit to the Administrator, who will then establish a compliance account for the source that includes the CAIR NO_X Ozone Season opt-in unit unless the source already has a compliance account.

(f) *Issuance of denial of CAIR opt-in permit.* Notwithstanding paragraphs (a) through (e) of this section, if at any time before issuance of a CAIR opt-in permit for the unit, the permitting authority determines that the CAIR designated representative fails to show that the unit meets the requirements for a CAIR NO_X Ozone Season opt-in unit in § 97.380 or meets the elements certified in § 97.383(a)(2), the permitting authority will issue a denial of a CAIR opt-in permit for the unit.

(g) *Date of entry into CAIR NO_X* Ozone Season Trading Program. A unit for which an initial CAIR opt-in permit is issued by the permitting authority shall become a CAIR NO_X Ozone Season opt-in unit, and a CAIR NO_X Ozone Season unit, as of the later of May 1, 2009 or May 1 of the first control period during which such CAIR opt-in permit is issued.

(h) *Repowered CAIR NO_X* Ozone Season opt-in unit. (1) If CAIR designated representative requests, and the permitting authority issues a CAIR opt-in permit providing for, allocation to a CAIR NO_X Ozone Season opt-in unit of CAIR NO_X Ozone Season allowances under § 97.388(c) and such unit is repowered after its date of entry into the CAIR NO_X Ozone Season Trading Program under paragraph (g) of this section, the repowered unit shall be treated as a CAIR NO_X Ozone Season opt-in unit replacing the original CAIR NO_X

Ozone Season opt-in unit, as of the date of start-up of the repowered unit's combustion chamber.

(2) Notwithstanding paragraphs (c) and (d) of this section, as of the date of start-up under paragraph (h)(1) of this section, the repowered unit shall be deemed to have the same date of commencement of operation, date of commencement of commercial operation, baseline heat input, and baseline NO_X emission rate as the original CAIR NO_X Ozone Season opt-in unit, and the original CAIR NO_X Ozone Season opt-in unit shall no longer be treated as a CAIR NO_X Ozone Season opt-in unit or a CAIR NO_X Ozone Season unit.

[65 FR 2727, Jan. 18, 2000, as amended at 71 FR 74795, Dec. 13, 2006]

§ 97.385 CAIR opt-in permit contents.

(a) Each CAIR opt-in permit will contain:

(1) All elements required for a complete CAIR permit application under § 97.322;

(2) The certification in § 97.383(a)(2);

(3) The unit's baseline heat input under § 97.384(c);

(4) The unit's baseline NO_X emission rate under § 97.384(d);

(5) A statement whether the unit is to be allocated CAIR NO_X Ozone Season allowances under § 97.388(b) or § 97.388(c) (subject to the conditions in §§ 97.384(h) and 97.386(g));

(6) A statement that the unit may withdraw from the CAIR NO_X Ozone Season Trading Program only in accordance with § 97.386; and

(7) A statement that the unit is subject to, and the owners and operators of the unit must comply with, the requirements of § 97.387.

(b) Each CAIR opt-in permit is deemed to incorporate automatically the definitions of terms under § 97.302 and, upon recordation by the Administrator under subpart FFFF or GGGG of this part or this subpart, every allocation, transfer, or deduction of CAIR NO_X Ozone Season allowances to or from the compliance account of the source that includes a CAIR NO_X Ozone Season opt-in unit covered by the CAIR opt-in permit.

(c) The CAIR opt-in permit shall be included, in a format specified by the permitting authority, in the CAIR permit for the source where the CAIR NO_X Ozone Season opt-in unit is located and in a title V operating permit or other federally enforceable permit for the source.

§ 97.386 Withdrawal from CAIR NO_X Ozone Season Trading Program.

Except as provided under paragraph (g) of this section, a CAIR NO_X Ozone Season opt-in unit may withdraw from the CAIR NO_X Ozone Season Trading Program, but only if the permitting authority issues a notification to the CAIR designated representative of the CAIR NO_X Ozone Season opt-in unit of the acceptance of the withdrawal of the CAIR NO_X Ozone Season opt-in unit in accordance with paragraph (d) of this section.

(a) *Requesting withdrawal.* In order to withdraw a CAIR NO_X Ozone Season opt-in unit from the CAIR NO_X Ozone Season Trading Program, the CAIR designated representative of the CAIR NO_X Ozone Season opt-in unit shall submit to the permitting authority a request to withdraw effective as of midnight of September 30 of a specified calendar year, which date must be at least 4 years after September 30 of the year of entry into the CAIR NO_X Ozone Season Trading Program under § 97.384(g). The request must be submitted no later than 90 days before the requested effective date of withdrawal.

(b) *Conditions for withdrawal.* Before a CAIR NO_X Ozone Season opt-in unit covered by a request under paragraph (a) of this section may withdraw from the CAIR NO_X Ozone Season Trading Program and the CAIR opt-in permit may be terminated under paragraph (e) of this section, the following conditions must be met:

(1) For the control period ending on the date on which the withdrawal is to be effective, the source that includes the CAIR NO_X Ozone Season opt-in unit must meet the requirement to hold CAIR NO_X Ozone Season allowances under § 97.306(c) and cannot have any excess emissions.

(2) After the requirement for withdrawal under paragraph (b)(1) of this section is met, the Administrator will deduct from the compliance account of the source that includes the CAIR NO_X Ozone Season opt-in unit CAIR NO_X

Ozone Season allowances equal in amount to and allocated for the same or a prior control period as any CAIR NO_X Ozone Season allowances allocated to the CAIR NO_X Ozone Season opt-in unit under § 97.388 for any control period for which the withdrawal is to be effective. If there are no remaining CAIR NO_X Ozone Season units at the source, the Administrator will close the compliance account, and the owners and operators of the CAIR NO_X Ozone Season opt-in unit may submit a CAIR NO_X Ozone Season allowance transfer for any remaining CAIR NO_X Ozone Season allowances to another CAIR NO_X Ozone Season Allowance Tracking System in accordance with subpart GGGG of this part.

(c) *Notification.* (1) After the requirements for withdrawal under paragraphs (a) and (b) of this section are met (including deduction of the full amount of CAIR NO_X Ozone Season allowances required), the permitting authority will issue a notification to the CAIR designated representative of the CAIR NO_X Ozone Season opt-in unit of the acceptance of the withdrawal of the CAIR NO_X Ozone Season opt-in unit as of midnight on September 30 of the calendar year for which the withdrawal was requested.

(2) If the requirements for withdrawal under paragraphs (a) and (b) of this section are not met, the permitting authority will issue a notification to the CAIR designated representative of the CAIR NO_X Ozone Season opt-in unit that the CAIR NO_X Ozone Season opt-in unit's request to withdraw is denied. Such CAIR NO_X Ozone Season opt-in unit shall continue to be a CAIR NO_X Ozone Season opt-in unit.

(d) *Permit amendment.* After the permitting authority issues a notification under paragraph (c)(1) of this section that the requirements for withdrawal have been met, the permitting authority will revise the CAIR permit covering the CAIR NO_X Ozone Season opt-in unit to terminate the CAIR opt-in permit for such unit as of the effective date specified under paragraph (c)(1) of this section. The unit shall continue to be a CAIR NO_X Ozone Season opt-in unit until the effective date of the termination and shall comply with all requirements under the CAIR NO_X Ozone Season Trading Program concerning any control periods for which the unit is a CAIR NO_X Ozone Season opt-in unit, even if such requirements arise or must be complied with after the withdrawal takes effect.

(e) *Reapplication upon failure to meet conditions of withdrawal.* If the permitting authority denies the CAIR NO_X Ozone Season opt-in unit's request to withdraw, the CAIR designated representative may submit another request to withdraw in accordance with paragraphs (a) and (b) of this section.

(f) *Ability to reapply to the CAIR NO_X Ozone Season Trading Program.* Once a CAIR NO_X Ozone Season opt-in unit withdraws from the CAIR NO_X Ozone Season Trading Program and its CAIR opt-in permit is terminated under this section, the CAIR designated representative may not submit another application for a CAIR opt-in permit under § 97.383 for such CAIR NO_X Ozone Season opt-in unit before the date that is 4 years after the date on which the withdrawal became effective. Such new application for a CAIR opt-in permit will be treated as an initial application for a CAIR opt-in permit under § 97.384.

(g) *Inability to withdraw.* Notwithstanding paragraphs (a) through (f) of this section, a CAIR NO_X Ozone Season opt-in unit shall not be eligible to withdraw from the CAIR NO_X Ozone Season Trading Program if the CAIR designated representative of the CAIR NO_X Ozone Season opt-in unit requests, and the permitting authority issues a CAIR opt-in permit providing for, allocation to the CAIR NO_X Ozone Season opt-in unit of CAIR NO_X Ozone Season allowances under § 97.388(c).

§ 97.387 Change in regulatory status.

(a) *Notification.* If a CAIR NO_X Ozone Season opt-in unit becomes a CAIR NO_X Ozone Season unit under § 97.304, then the CAIR designated representative shall notify in writing the permitting authority and the Administrator of such change in the CAIR NO_X Ozone Season opt-in unit's regulatory status, within 30 days of such change.

(b) *Permitting authority's and Administrator's actions.* (1) If a CAIR NO_X Ozone Season opt-in unit becomes a CAIR NO_X Ozone Season unit under § 97.304, the permitting authority will revise

the CAIR NO_X Ozone Season opt-in unit's CAIR opt-in permit to meet the requirements of a CAIR permit under § 97.323, and remove the CAIR opt-in permit provisions, as of the date on which the CAIR NO_X Ozone Season opt-in unit becomes a CAIR NO_X Ozone Season unit under § 97.304.

(2)(i) The Administrator will deduct from the compliance account of the source that includes the CAIR NO_X Ozone Season opt-in unit that becomes a CAIR NO_X Ozone Season unit under § 97.304, CAIR NO_X Ozone Season allowances equal in amount to and allocated for the same or a prior control period as:

(A) Any CAIR NO_X Ozone Season allowances allocated to the CAIR NO_X Ozone Season opt-in unit under § 97.388 for any control period after the date on which the CAIR NO_X Ozone Season opt-in unit becomes a CAIR NO_X Ozone Season unit under § 97.304; and

(B) If the date on which the CAIR NO_X Ozone Season opt-in unit becomes a CAIR NO_X Ozone Season unit under § 97.304 is not September 30, the CAIR NO_X Ozone Season allowances allocated to the CAIR NO_X Ozone Season opt-in unit under § 97.388 for the control period that includes the date on which the CAIR NO_X Ozone Season opt-in unit becomes a CAIR NO_X Ozone Season unit under § 97.304, multiplied by the ratio of the number of days, in the control period, starting with the date on which the CAIR NO_X Ozone Season opt-in unit becomes a CAIR NO_X Ozone Season unit under § 97.304 divided by the total number of days in the control period and rounded to the nearest whole allowance as appropriate.

(ii) The CAIR designated representative shall ensure that the compliance account of the source that includes the CAIR NO_X Ozone Season opt-in unit that becomes a CAIR NO_X Ozone Season unit under § 97.304 contains the CAIR NO_X Ozone Season allowances necessary for completion of the deduction under paragraph (b)(2)(i) of this section.

(3)(i) For every control period after the date on which the CAIR NO_X Ozone Season opt-in unit becomes a CAIR NO_X Ozone Season unit under § 97.304, the CAIR NO_X Ozone Season opt-in unit will be allocated CAIR NO_X Ozone Season allowances under § 97.342.

(ii) If the date on which the CAIR NO_X Ozone Season opt-in unit becomes a CAIR NO_X Ozone Season unit under § 97.304 is not September 30, the following amount of CAIR NO_X Ozone Season allowances will be allocated to the CAIR NO_X Ozone Season opt-in unit (as a CAIR NO_X Ozone Season unit) under § 97.342 for the control period that includes the date on which the CAIR NO_X Ozone Season opt-in unit becomes a CAIR NO_X Ozone Season unit under § 97.304:

(A) The amount of CAIR NO_X Ozone Season allowances otherwise allocated to the CAIR NO_X Ozone Season opt-in unit (as a CAIR NO_X Ozone Season unit) under § 97.342 for the control period multiplied by;

(B) The ratio of the number of days, in the control period, starting with the date on which the CAIR NO_X Ozone Season opt-in unit becomes a CAIR NO_X Ozone Season unit under § 97.304, divided by the total number of days in the control period; and

(C) Rounded to the nearest whole allowance as appropriate.

[65 FR 2727, Jan. 18, 2000, as amended at 71 FR 74795, Dec. 13, 2006]

§ 97.388 CAIR NO_X Ozone Season allowance allocations to CAIR NO_X Ozone Season opt-in units.

(a) *Timing requirements.* (1) When the CAIR opt-in permit is issued under § 97.384(e), the permitting authority will allocate CAIR NO_X Ozone Season allowances to the CAIR NO_X Ozone Season opt-in unit, and submit to the Administrator the allocation for the control period in which a CAIR NO_X Ozone Season opt-in unit enters the CAIR NO_X Ozone Season Trading Program under § 97.384(g), in accordance with paragraph (b) or (c) of this section.

(2) By no later than July 31 of the control period after the control period in which a CAIR NO_X Ozone Season opt-in unit enters the CAIR NO_X Ozone Season Trading Program under § 97.384(g) and July 31 of each year thereafter, the permitting authority will allocate CAIR NO_X Ozone Season allowances to the CAIR NO_X Ozone Season opt-in unit, and submit to the

Administrator the allocation for the control period that includes such submission deadline and in which the unit is a CAIR NO_X Ozone Season opt-in unit, in accordance with paragraph (b) or (c) of this section.

(b) *Calculation of allocation.* For each control period for which a CAIR NO_X Ozone Season opt-in unit is to be allocated CAIR NO_X Ozone Season allowances, the permitting authority will allocate in accordance with the following procedures, if provided in a State implementation plan revision submitted in accordance with § 51.123(ee)(3)(i), (ii), or (iii) of this chapter and approved by the Administrator:

(1) The heat input (in mmBtu) used for calculating the CAIR NO_X Ozone Season allowance allocation will be the lesser of:

(i) The CAIR NO_X Ozone Season opt-in unit's baseline heat input determined under § 97.384(c); or

(ii) The CAIR NO_X Ozone Season opt-in unit's heat input, as determined in accordance with subpart HHHH of this part, for the immediately prior control period, except when the allocation is being calculated for the control period in which the CAIR NO_X Ozone Season opt-in unit enters the CAIR NO_X Ozone Season Trading Program under § 97.384(g).

(2) The NO_X emission rate (in lb/mmBtu) used for calculating CAIR NO_X Ozone Season allowance allocations will be the lesser of:

(i) The CAIR NO_X Ozone Season opt-in unit's baseline NO_X emissions rate (in lb/mmBtu) determined under § 97.384(d) and multiplied by 70 percent; or

(ii) The most stringent State or Federal NO_X emissions limitation applicable to the CAIR NO_X Ozone Season opt-in unit at any time during the control period for which CAIR NO_X Ozone Season allowances are to be allocated.

(3) The permitting authority will allocate CAIR NO_X Ozone Season allowances to the CAIR NO_X Ozone Season opt-in unit in an amount equaling the heat input under paragraph (b)(1) of this section, multiplied by the NO_X emission rate under paragraph (b)(2) of this section, divided by 2,000 lb/ton, and rounded to the nearest whole allowance as appropriate.

(c) Notwithstanding paragraph (b) of this section and if the CAIR designated representative requests, and the permitting authority issues a CAIR opt-in permit (based on a demonstration of the intent to repower stated under § 97.383 (a)(5)) providing for, allocation to a CAIR NO_X Ozone Season opt-in unit of CAIR NO_X Ozone Season allowances under this paragraph (subject to the conditions in §§ 97.384(h) and 97.386(g)), the permitting authority will allocate to the CAIR NO_X Ozone Season opt-in unit as follows, if provided in a State implementation plan revision submitted in accordance with § 51.123(ee)(3)(i), (ii), or (iii) of this chapter and approved by the Administrator:

(1) For each control period in 2009 through 2014 for which the CAIR NO_X Ozone Season opt-in unit is to be allocated CAIR NO_X Ozone Season allowances,

(i) The heat input (in mmBtu) used for calculating CAIR NO_X Ozone Season allowance allocations will be determined as described in paragraph (b)(1) of this section.

(ii) The NO_X emission rate (in lb/mmBtu) used for calculating CAIR NO_X Ozone Season allowance allocations will be the lesser of:

(A) The CAIR NO_X Ozone Season opt-in unit's baseline NO_X emissions rate (in lb/mmBtu) determined under § 97.384(d); or

(B) The most stringent State or Federal NO_X emissions limitation applicable to the CAIR NO_X Ozone Season opt-in unit at any time during the control period in which the CAIR NO_X Ozone Season opt-in unit enters the CAIR NO_X Ozone Season Trading Program under § 97.384(g).

(iii) The permitting authority will allocate CAIR NO_X Ozone Season allowances to the CAIR NO_X Ozone Season opt-in unit in an amount equaling the heat input under paragraph (c)(1)(i) of this section, multiplied by the NO_X emission rate under paragraph (c)(1)(ii) of this section, divided by 2,000 lb/ton, and rounded to the nearest whole allowance as appropriate.

(2) For each control period in 2015 and thereafter for which the CAIR NO_X

Ozone Season opt-in unit is to be allocated CAIR NO_X Ozone Season allowances,

(i) The heat input (in mmBtu) used for calculating the CAIR NO_X Ozone Season allowance allocations will be determined as described in paragraph (b)(1) of this section.

(ii) The NO_X emission rate (in lb/mmBtu) used for calculating the CAIR NO_X Ozone Season allowance allocation will be the lesser of:

(A) 0.15 lb/mmBtu;

(B) The CAIR NO_X Ozone Season opt-in unit's baseline NO_X emissions rate (in lb/mmBtu) determined under §97.384(d); or

(C) The most stringent State or Federal NO_X emissions limitation applicable to the CAIR NO_X Ozone Season opt-in unit at any time during the control period for which CAIR NO_X Ozone Season allowances are to be allocated.

(iii) The permitting authority will allocate CAIR NO_X Ozone Season allowances to the CAIR NO_X Ozone Season opt-in unit in an amount equaling the heat input under paragraph (c)(2)(i) of this section, multiplied by the NO_X emission rate under paragraph (c)(2)(ii) of this section, divided by 2,000 lb/ton, and rounded to the nearest whole allowance as appropriate.

(d) *Recordation*. If provided in a State implementation plan revision submitted in accordance with §51.123(ee)(3)(i), (ii), or (iii) of this chapter and approved by the Administrator:

(1) The Administrator will record, in the compliance account of the source that includes the CAIR NO_X Ozone Season opt-in unit, the CAIR NO_X Ozone Season allowances allocated by the permitting authority to the CAIR NO_X Ozone Season opt-in unit under paragraph (a)(1) of this section.

(2) By September 1 of the control period in which a CAIR NO_X Ozone Season opt-in unit enters the CAIR NO_X Ozone Season Trading Program under §97.384(g) and September 1 of each year thereafter, the Administrator will record, in the compliance account of the source that includes the CAIR NO_X Ozone Season opt-in unit, the CAIR NO_X Ozone Season allowances allocated by the permitting authority to the CAIR NO_X Ozone Season opt-in unit under paragraph (a)(2) of this section.

APPENDIX A TO SUBPART IIII OF PART 97—STATES WITH APPROVED STATE IMPLEMENTATION PLAN REVISIONS CONCERNING CAIR NO_X OZONE SEASON OPT-IN UNITS

1. The following States have State Implementation Plan revisions under §51.123(ee)(3) of this chapter approved by the Administrator and establishing procedures providing for CAIR NO_X Ozone Season opt-in units under subpart IIII of this part and allocation of CAIR NO_X Ozone Season allowances to such units under §97.388(b):

Indiana
Michigan
North Carolina
Ohio
South Carolina
Tennessee

2. The following States have State Implementation Plan revisions under §51.123(ee)(3) of this chapter approved by the Administrator and establishing procedures providing for CAIR NO_X Ozone Season opt-in units under subpart IIII of this part and allocation of CAIR NO_X Ozone Season allowances to such units under §97.388(c):

Indiana
Michigan
North Carolina
Ohio
South Carolina
Tennessee

[65 FR 2727, Jan. 18, 2000, as amended at 72 FR 46394, Aug. 20, 2007; 72 FR 56920, Oct. 5, 2007; 72 FR 57215, Oct. 9, 2007; 72 FR 59487, Oct. 22, 2007; 72 FR 72263, Dec. 20, 2007; 73 FR 6041, Feb. 1, 2008]

APPENDIX A TO PART 97—FINAL SECTION 126 RULE: EGU ALLOCATIONS, 2004–2007

ST	Plant	Plant_id	Point_id	NO_X allocation for EGUs
DC	BENNING	603	15	80
DC	BENNING	603	16	117
DE	CHRISTIANA SUB	591	11	5
DE	CHRISTIANA SUB	591	14	5
DE	DELAWARE CITY	52193	B4	141
DE	DELAWARE CITY	52193	ST___	155

ST	Plant	Plant_id	Point_id	NO_X allocation for EGUs
DE	DELAWARE CITY	52193	ST___	159
DE	DELAWARE CITY	52193	ST___	158
DE	EDGE MOOR	593	3	234
DE	EDGE MOOR	593	4	401
DE	EDGE MOOR	593	5	602
DE	HAY ROAD	7153	**3	184
DE	HAY ROAD	7153	—1	235
DE	HAY ROAD	7153	—2	207
DE	INDIAN RIVER	594	1	187
DE	INDIAN RIVER	594	2	194
DE	INDIAN RIVER	594	3	369
DE	INDIAN RIVER	594	4	729
DE	MCKEE RUN	599	3	119
DE	VAN SANT STATION	7318	**11	7
IN	ANDERSON	7336	—ACT1	5
IN	ANDERSON	7336	—ACT2	5
IN	CLIFTY CREEK	983	1	558
IN	CLIFTY CREEK	983	2	543
IN	CLIFTY CREEK	983	3	564
IN	CLIFTY CREEK	983	4	525
IN	CLIFTY CREEK	983	5	561
IN	CLIFTY CREEK	983	6	509
IN	CONNERSVILLE	1002	1	1
IN	CONNERSVILLE	1002	2	1
IN	GALLAGHER	1008	1	290
IN	GALLAGHER	1008	2	276
IN	GALLAGHER	1008	3	347
IN	GALLAGHER	1008	4	329
IN	NOBLESVILLE	1007	1	48
IN	NOBLESVILLE	1007	2	45
IN	NOBLESVILLE	1007	3	45
IN	RICHMOND	7335	—RCT1	5
IN	RICHMOND	7335	—RCT2	5
IN	TANNERS CREEK	988	U1	297
IN	TANNERS CREEK	988	U2	235
IN	TANNERS CREEK	988	U3	387
IN	TANNERS CREEK	988	U4	906
IN	WHITEWATER VALLEY	1040	1	74
IN	WHITEWATER VALLEY	1040	2	173
KY	BIG SANDY	1353	BSU1	565
KY	BIG SANDY	1353	BSU2	1,741
KY	CANE RUN	1363	4	397
KY	CANE RUN	1363	5	332
KY	CANE RUN	1363	6	430
KY	COOPER	1384	1	183
KY	COOPER	1384	2	367
KY	DALE	1385	3	161
KY	DALE	1385	4	158
KY	E W BROWN	1355	1	193
KY	E W BROWN	1355	10	37
KY	E W BROWN	1355	2	317
KY	E W BROWN	1355	3	863
KY	E W BROWN	1355	8	34
KY	E W BROWN	1355	9	34
KY	E.W. BROWN	1355	11	21
KY	EAST BEND	6018	2	1,413
KY	GHENT	1356	1	1,232
KY	GHENT	1356	2	1,081
KY	GHENT	1356	3	1,104
KY	GHENT	1356	4	1,132
KY	H L SPURLOCK	6041	1	697
KY	H L SPURLOCK	6041	2	1,589
KY	MILL CREEK	1364	1	528
KY	MILL CREEK	1364	2	600
KY	MILL CREEK	1364	3	941
KY	MILL CREEK	1364	4	1,096
KY	PADDY'S RUN	1366	12	8
KY	PINEVILLE	1360	3	67
KY	TRIMBLE COUNTY	6071	1	1,221
KY	TYRONE	1361	1	3
KY	TYRONE	1361	2	3
KY	TYRONE	1361	3	3
KY	TYRONE	1361	4	3

ST	Plant	Plant_id	Point_id	NO_X allocation for EGUs
KY	TYRONE	1361	5	117
MD	BRANDON SHORES	602	1	1,827
MD	BRANDON SHORES	602	2	1,713
MD	C P CRANE	1552	1	434
MD	C P CRANE	1552	2	463
MD	CHALK POINT	1571	—GT2	1
MD	CHALK POINT	1571	—GT3	36
MD	CHALK POINT	1571	—GT4	39
MD	CHALK POINT	1571	—GT5	55
MD	CHALK POINT	1571	—GT6	60
MD	CHALK POINT	1571	—SGT1	24
MD	CHALK POINT	1571	1	833
MD	CHALK POINT	1571	2	861
MD	CHALK POINT	1571	3	585
MD	CHALK POINT	1571	4	522
MD	DICKERSON	1572	—GT2	36
MD	DICKERSON	1572	—GT3	66
MD	DICKERSON	1572	1	447
MD	DICKERSON	1572	2	441
MD	DICKERSON	1572	3	481
MD	GOULD STREET	1553	3	81
MD	HERBERT A WAGNER	1554	1	134
MD	HERBERT A WAGNER	1554	2	399
MD	HERBERT A WAGNER	1554	3	723
MD	HERBERT A WAGNER	1554	4	301
MD	MORGANTOWN	1573	—GT3	9
MD	MORGANTOWN	1573	—GT4	9
MD	MORGANTOWN	1573	—GT5	9
MD	MORGANTOWN	1573	—GT6	8
MD	MORGANTOWN	1573	1	1,151
MD	MORGANTOWN	1573	2	1,375
MD	PANDA BRANDYWINE	54832	1	95
MD	PANDA BRANDYWINE	54832	2	84
MD	PERRYMAN	1556	**51	56
MD	PERRYMAN	1556	—GT1	8
MD	PERRYMAN	1556	—GT2	9
MD	PERRYMAN	1556	—GT3	6
MD	PERRYMAN	1556	—GT4	10
MD	R P SMITH	1570	11	143
MD	R P SMITH	1570	9	11
MD	RIVERSIDE	1559	—GT6	11
MD	RIVERSIDE	1559	4	40
MD	VIENNA	1564	8	169
MD	WESTPORT	1560	—GT5	28
MI	ADA COGEN LTD	10819	CA_Ltd	23
MI	BELLE RIVER	6034	1	1,589
MI	BELLE RIVER	6034	2	1,672
MI	DAN E KARN	1702	1	552
MI	DAN E KARN	1702	2	530
MI	DAN E KARN	1702	3	288
MI	DAN E KARN	1702	4	310
MI	ECKERT STATION	1831	1	52
MI	ECKERT STATION	1831	2	47
MI	ECKERT STATION	1831	3	65
MI	ECKERT STATION	1831	4	116
MI	ECKERT STATION	1831	5	154
MI	ECKERT STATION	1831	6	131
MI	ENDICOTT GENERATING STATION	4259	1	98
MI	ERICKSON	1832	1	381
MI	GREENWOOD	6035	1	373
MI	HANCOCK	1730	5	3
MI	HANCOCK	1730	6	3
MI	HARBOR BEACH	1731	1	97
MI	J C WEADOCK	1720	7	346
MI	J C WEADOCK	1720	8	342
MI	J R WHITING	1723	1	225
MI	J R WHITING	1723	2	204
MI	J R WHITING	1723	3	249
MI	JAMES DE YOUNG	1830	5	69
MI	MARYSVILLE	1732	10	22
MI	MARYSVILLE	1732	11	16
MI	MARYSVILLE	1732	12	17
MI	MARYSVILLE	1732	9	17

ST	Plant	Plant_id	Point_id	NO_X allocation for EGUs
MI	MIDLAND COGENERATION VENTURE	10745	003	269
MI	MIDLAND COGENERATION VENTURE	10745	004	276
MI	MIDLAND COGENERATION VENTURE	10745	005	271
MI	MIDLAND COGENERATION VENTURE	10745	006	273
MI	MIDLAND COGENERATION VENTURE	10745	007	280
MI	MIDLAND COGENERATION VENTURE	10745	008	277
MI	MIDLAND COGENERATION VENTURE	10745	009	273
MI	MIDLAND COGENERATION VENTURE	10745	010	271
MI	MIDLAND COGENERATION VENTURE	10745	011	274
MI	MIDLAND COGENERATION VENTURE	10745	012	269
MI	MIDLAND COGENERATION VENTURE	10745	013	275
MI	MIDLAND COGENERATION VENTURE	10745	014	269
MI	MISTERSKY	1822	5	33
MI	MISTERSKY	1822	6	155
MI	MISTERSKY	1822	7	98
MI	MONROE	1733	1	1,902
MI	MONROE	1733	2	1,555
MI	MONROE	1733	3	1,574
MI	MONROE	1733	4	1,822
MI	RIVER ROUGE	1740	1	0
MI	RIVER ROUGE	1740	2	627
MI	RIVER ROUGE	1740	3	652
MI	ROUGE POWERHOUSE #1	10272	1	232
MI	ST CLAIR	1743	1	339
MI	ST CLAIR	1743	2	304
MI	ST CLAIR	1743	3	351
MI	ST CLAIR	1743	4	349
MI	ST CLAIR	1743	5	0
MI	ST CLAIR	1743	6	646
MI	ST CLAIR	1743	7	733
MI	TRENTON CHANNEL	1745	16	132
MI	TRENTON CHANNEL	1745	17	124
MI	TRENTON CHANNEL	1745	18	130
MI	TRENTON CHANNEL	1745	19	126
MI	TRENTON CHANNEL	1745	9A	968
MI	WYANDOTTE	1866	5	8
MI	WYANDOTTE	1866	7	81
MI	WYANDOTTE	1866	8	36
NC	ASHEVILLE	2706	1	491
NC	ASHEVILLE	2706	2	479
NC	BELEWS CREEK	8042	1	2,306
NC	BELEWS CREEK	8042	2	2,688
NC	BUCK	2720	5	59
NC	BUCK	2720	6	65
NC	BUCK	2720	7	69
NC	BUCK	2720	8	284
NC	BUCK	2720	9	300
NC	BUTLER WARNER GEN PL	1016	—1	40
NC	BUTLER WARNER GEN PL	1016	—2	40
NC	BUTLER WARNER GEN PL	1016	—3	40
NC	BUTLER WARNER GEN PL	1016	—6	42
NC	BUTLER WARNER GEN PL	1016	—7	40
NC	BUTLER WARNER GEN PL	1016	—8	40
NC	BUTLER WARNER GEN PL	1016	—9	103
NC	CAPE FEAR	2708	5	255
NC	CAPE FEAR	2708	6	361
NC	CLIFFSIDE	2721	1	67
NC	CLIFFSIDE	2721	2	73
NC	CLIFFSIDE	2721	3	95
NC	CLIFFSIDE	2721	4	107
NC	CLIFFSIDE	2721	5	1,180
NC	COGENTRIX-ROCKY MOUNT	50468	ST_unt	303
NC	COGENTRIX ELIZABETHTOWN	10380	ST_OWN	111
NC	COGENTRIX KENANSVILLE	10381	ST_LLE	102
NC	COGENTRIX LUMBERTON	10382	ST_TON	111
NC	COGENTRIX ROXBORO	10379	ST_ORO	166
NC	COGENTRIX SOUTHPORT	10378	ST_ORT	335
NC	DAN RIVER	2723	1	117
NC	DAN RIVER	2723	2	128
NC	DAN RIVER	2723	3	271
NC	G G ALLEN	2718	1	311
NC	G G ALLEN	2718	2	316
NC	G G ALLEN	2718	3	525

ST	Plant	Plant_id	Point_id	NO_X allocation for EGUs
NC	G G ALLEN	2718	4	470
NC	G G ALLEN	2718	5	514
NC	L V SUTTON	2713	1	162
NC	L V SUTTON	2713	2	176
NC	L V SUTTON	2713	3	717
NC	L V SUTTON	2713	CT2B	2
NC	LEE	2709	1	129
NC	LEE	2709	2	142
NC	LEE	2709	3	414
NC	LEE	2709	CT4	1
NC	LINCOLN	7277	1	33
NC	LINCOLN	7277	10	31
NC	LINCOLN	7277	11	33
NC	LINCOLN	7277	12	31
NC	LINCOLN	7277	13	26
NC	LINCOLN	7277	14	26
NC	LINCOLN	7277	15	25
NC	LINCOLN	7277	16	25
NC	LINCOLN	7277	2	33
NC	LINCOLN	7277	3	31
NC	LINCOLN	7277	4	31
NC	LINCOLN	7277	5	29
NC	LINCOLN	7277	6	30
NC	LINCOLN	7277	7	24
NC	LINCOLN	7277	8	25
NC	LINCOLN	7277	9	32
NC	MARSHALL	2727	1	899
NC	MARSHALL	2727	2	940
NC	MARSHALL	2727	3	1,588
NC	MARSHALL	2727	4	1,570
NC	MAYO	6250	1A	893
NC	MAYO	6250	1B	875
NC	PANDA-ROSEMARY	50555	CT_ary	62
NC	PANDA-ROSEMARY	50555	CW_ary	47
NC	RIVERBEND	2732	10	266
NC	RIVERBEND	2732	7	193
NC	RIVERBEND	2732	8	200
NC	RIVERBEND	2732	9	253
NC	ROANOKE VALLEY	50254	1	440
NC	ROANOKE VALLEY	50254	2	140
NC	ROXBORO	2712	1	766
NC	ROXBORO	2712	2	1,426
NC	ROXBORO	2712	3A	792
NC	ROXBORO	2712	3B	785
NC	ROXBORO	2712	4A	778
NC	ROXBORO	2712	4B	733
NC	TOBACCOVILLE	50221	1	53
NC	TOBACCOVILLE	50221	2	53
NC	TOBACCOVILLE	50221	3	53
NC	TOBACCOVILLE	50221	4	53
NC	UNC—CHAPEL HILL	54276	ST_ill	14
NC	W H WEATHERSPOON	2716	1	76
NC	W H WEATHERSPOON	2716	2	86
NC	W H WEATHERSPOON	2716	3	161
NC	W H WEATHERSPOON	2716	CT–1	4
NC	W H WEATHERSPOON	2716	CT–2	3
NC	W H WEATHERSPOON	2716	CT–3	2
NC	W H WEATHERSPOON	2716	CT–4	4
NJ	B L ENGLAND	2378	1	353
NJ	B L ENGLAND	2378	2	417
NJ	B L ENGLAND	2378	3	114
NJ	BAYONNE	50497	1	139
NJ	BAYONNE	50497	2	143
NJ	BAYONNE	50497	3	140
NJ	BERGEN	2398	1101	152
NJ	BERGEN	2398	1201	157
NJ	BERGEN	2398	1301	155
NJ	BERGEN	2398	1401	152
NJ	BURLINGTON	2399	101	30
NJ	BURLINGTON	2399	102	34
NJ	BURLINGTON	2399	103	39
NJ	BURLINGTON	2399	104	47
NJ	BURLINGTON	2399	11–1	2

ST	Plant	Plant_id	Point_id	NO_X allocation for EGUs
NJ	BURLINGTON	2399	11–2	2
NJ	BURLINGTON	2399	11–3	2
NJ	BURLINGTON	2399	11–4	2
NJ	BURLINGTON	2399	7	17
NJ	BURLINGTON	2399	9–1	4
NJ	BURLINGTON	2399	9–2	4
NJ	BURLINGTON	2399	9–3	4
NJ	BURLINGTON	2399	9–4	4
NJ	CAMDEN	10751	1	378
NJ	CARLL'S CORNER STATION	2379	1	2
NJ	CARLL'S CORNER STATION	2379	2	16
NJ	CARNEYS POINT (CCLP) NUG	10566	ST_NUG	527
NJ	CEDAR STATION	2380	1E&W	5
NJ	CUMBERLAND	5083	—GT1	40
NJ	DEEPWATER	2384	1	49
NJ	DEEPWATER	2384	4	5
NJ	DEEPWATER	2384	6	42
NJ	DEEPWATER	2384	8	195
NJ	EDISON	2400	1–1A&B	3
NJ	EDISON	2400	1–2A&B	3
NJ	EDISON	2400	1–3A&B	3
NJ	EDISON	2400	1–4A&B	3
NJ	EDISON	2400	2–1A&B	7
NJ	EDISON	2400	2–2A&B	7
NJ	EDISON	2400	2–3A&B	7
NJ	EDISON	2400	2–4A&B	7
NJ	EDISON	2400	3–1A&B	7
NJ	EDISON	2400	3–2A&B	7
NJ	EDISON	2400	3–3A&B	7
NJ	EDISON	2400	3–4A&B	7
NJ	ESSEX	2401	10–1A&B	10
NJ	ESSEX	2401	10–2A&B	10
NJ	ESSEX	2401	10–3A&B	10
NJ	ESSEX	2401	10–4A&B	10
NJ	ESSEX	2401	11–1A&B	11
NJ	ESSEX	2401	11–2A&B	11
NJ	ESSEX	2401	11–3A&B	11
NJ	ESSEX	2401	11–4A&B	11
NJ	ESSEX	2401	12–1A&B	13
NJ	ESSEX	2401	12–2A&B	13
NJ	ESSEX	2401	12–3A&B	13
NJ	ESSEX	2401	12–4A&B	13
NJ	ESSEX	2401	9	66
NJ	FORKED RIVER	7138	—1	17
NJ	FORKED RIVER	7138	—2	17
NJ	GILBERT	2393	03	47
NJ	GILBERT	2393	04	64
NJ	GILBERT	2393	05	63
NJ	GILBERT	2393	06	61
NJ	GILBERT	2393	07	63
NJ	GILBERT	2393	1	4
NJ	GILBERT	2393	2	4
NJ	GILBERT	2393	CT–9	61
NJ	HUDSON	2403	1	175
NJ	HUDSON	2403	2	884
NJ	HUDSON	2403	3	3
NJ	KEARNY	2404	10	26
NJ	KEARNY	2404	11	34
NJ	KEARNY	2404	12–1	8
NJ	KEARNY	2404	12–2	8
NJ	KEARNY	2404	12–3	8
NJ	KEARNY	2404	12–4	8
NJ	KEARNY	2404	7	35
NJ	KEARNY	2404	8	16
NJ	LINDEN	2406	11	16
NJ	LINDEN	2406	12	11
NJ	LINDEN	2406	13	20
NJ	LINDEN	2406	2	52
NJ	LINDEN	2406	6	2
NJ	LINDEN	2406	7	60
NJ	LINDEN	2406	8	70
NJ	LINDEN COGEN	50006	100	276
NJ	LINDEN COGEN	50006	200	280

ST	Plant	Plant_id	Point_id	NO_X allocation for EGUs
NJ	LINDEN COGEN	50006	300	274
NJ	LINDEN COGEN	50006	400	272
NJ	LINDEN COGEN	50006	500	278
NJ	LOGAN GENERATING PLANT	10043	1	424
NJ	MERCER	2408	1	489
NJ	MERCER	2408	2	558
NJ	MICKELTON	8008	1	28
NJ	MIDDLE ST	2382	3	4
NJ	MILFORD POWER LP	10616	1	44
NJ	MOBIL NUG	n114	CT_NUG	40
NJ	NEWARK BAY COGEN	50385	1	9
NJ	NEWARK BAY COGEN	50385	2	9
NJ	NORTH JERSEY ENERGY ASSOCIATES	10308	1	19
NJ	NORTH JERSEY ENERGY ASSOCIATES	10308	2	19
NJ	O'BRIEN (NEWARK) COGENERATION, INC.	50797	1	8
NJ	O'BRIEN (PARLIN) COGENERATION, INC.	50799	1	8
NJ	O'BRIEN (PARLIN) COGENERATION, INC.	50799	2	8
NJ	PEDRICKTOWN COGEN	10099	1	13
NJ	PRIME ENERGY LP	50852	1	178
NJ	SALEM	2410	3A&B	3
NJ	SAYREVILLE	2390	07	40
NJ	SAYREVILLE	2390	08	51
NJ	SAYREVILLE	2390	C–1	16
NJ	SAYREVILLE	2390	C–2	13
NJ	SAYREVILLE	2390	C–3	11
NJ	SAYREVILLE	2390	C–4	13
NJ	SEWAREN	2411	1	42
NJ	SEWAREN	2411	2	45
NJ	SEWAREN	2411	3	58
NJ	SEWAREN	2411	4	91
NJ	SEWAREN	2411	6	2
NJ	SHERMAN	7288	CT–1	37
NJ	VINELAND VCLP NUG	54807	GT_NUG	40
NJ	WERNER	2385	04	14
NJ	WERNER	2385	C–1	7
NJ	WERNER	2385	C–2	6
NJ	WERNER	2385	C–3	7
NJ	WERNER	2385	C–4	7
NJ	WEST STAT	6776	1	10
NY	59TH STREET	2503	114	41
NY	59TH STREET	2503	115	32
NY	74TH STREET	2504	120	70
NY	74TH STREET	2504	121	80
NY	74TH STREET	2504	122	65
NY	ARTHUR KILL	2490	20	524
NY	ARTHUR KILL	2490	30	380
NY	ASTORIA	8906	30	557
NY	ASTORIA	8906	40	505
NY	ASTORIA	8906	50	561
NY	ASTORIA	8906	GT2–1	9
NY	ASTORIA	8906	GT2–2	9
NY	ASTORIA	8906	GT2–3	9
NY	ASTORIA	8906	GT2–4	9
NY	ASTORIA	8906	GT3–1	9
NY	ASTORIA	8906	GT3–2	9
NY	ASTORIA	8906	GT3–3	9
NY	ASTORIA	8906	GT3–4	9
NY	ASTORIA	8906	GT4–1	9
NY	ASTORIA	8906	GT4–2	9
NY	ASTORIA	8906	GT4–3	9
NY	ASTORIA	8906	GT4–4	9
NY	BOWLINE POINT	2625	1	749
NY	BOWLINE POINT	2625	2	566
NY	BROOKLYN NAVY YARD	54914	1	239
NY	BROOKLYN NAVY YARD	54914	2	220
NY	CHARLES POLETTI	2491	001	883
NY	DANSKAMMER	2480	1	34
NY	DANSKAMMER	2480	2	45
NY	DANSKAMMER	2480	3	229
NY	DANSKAMMER	2480	4	449
NY	EF BARRETT	2511	10	285
NY	EF BARRETT	2511	20	287
NY	EAST RIVER	2493	50	33

ST	Plant	Plant_id	Point_id	NO_X allocation for EGUs
NY	EAST RIVER	2493	60	319
NY	EAST RIVER	2493	70	113
NY	FAR ROCKAWAY	2513	40	138
NY	GLENWOOD	2514	40	151
NY	GLENWOOD	2514	50	124
NY	GLENWOOD	2514	U00020	1
NY	GLENWOOD	2514	U00021	1
NY	HUDSON AVENUE	2496	100	162
NY	LOVETT	2629	3	74
NY	LOVETT	2629	4	304
NY	LOVETT	2629	5	380
NY	NISSEQUOGUE COGEN PARTNERS	4931	1	86
NY	NORTHPORT	2516	1	343
NY	NORTHPORT	2516	2	533
NY	NORTHPORT	2516	3	375
NY	NORTHPORT	2516	4	582
NY	O&R HILLBURN GT	2628	1	2
NY	O&R SHOEMAKER GT	2632	1	10
NY	PORT JEFFERSON	2517	3	270
NY	PORT JEFFERSON	2517	4	253
NY	RAVENSWOOD	2500	10	299
NY	RAVENSWOOD	2500	20	363
NY	RAVENSWOOD	2500	30	1,360
NY	RAVENSWOOD	2500	GT2–1	3
NY	RAVENSWOOD	2500	GT2–2	3
NY	RAVENSWOOD	2500	GT2–3	3
NY	RAVENSWOOD	2500	GT2–4	3
NY	RAVENSWOOD	2500	GT3–1	3
NY	RAVENSWOOD	2500	GT3–2	3
NY	RAVENSWOOD	2500	GT3–3	3
NY	RAVENSWOOD	2500	GT3–4	3
NY	RICHARD M FLYNN	7314	NA1	246
NY	RICHARD M FLYNN	7314	NA2	25
NY	ROSETON	8006	1	479
NY	ROSETON	8006	2	595
NY	TRIGEN-NDEC	52056	4	105
NY	WADING RIVER	7146	1	8
NY	WADING RIVER	7146	2	8
NY	WADING RIVER	7146	3	8
NY	WADING RIVER	7146	UGT013	1
NY	WATERSIDE	2502	61	84
NY	WATERSIDE	2502	62	91
NY	WATERSIDE	2502	80	208
NY	WATERSIDE	2502	90	208
NY	WEST BABYLON	2521	1	2
OH	ASHTABULA	2835	10	75
OH	ASHTABULA	2835	11	80
OH	ASHTABULA	2835	7	333
OH	ASHTABULA	2835	8	70
OH	ASHTABULA	2835	9	66
OH	AVON LAKE	2836	10	139
OH	AVON LAKE	2836	12	1,040
OH	AVON LAKE	2836	9	41
OH	AVON LAKE	2836	CT10	3
OH	BAY SHORE	2878	1	208
OH	BAY SHORE	2878	2	229
OH	BAY SHORE	2878	3	213
OH	BAY SHORE	2878	4	330
OH	CARDINAL	2828	1	1,030
OH	CARDINAL	2828	2	1,083
OH	CARDINAL	2828	3	1,079
OH	CONESVILLE	2840	1	214
OH	CONESVILLE	2840	2	203
OH	CONESVILLE	2840	3	212
OH	CONESVILLE	2840	4	1,119
OH	CONESVILLE	2840	5	731
OH	CONESVILLE	2840	6	736
OH	DICKS CREEK	2831	1	7
OH	EASTLAKE	2837	1	214
OH	EASTLAKE	2837	2	230
OH	EASTLAKE	2837	3	251
OH	EASTLAKE	2837	4	371
OH	EASTLAKE	2837	5	974

ST	Plant	Plant_id	Point_id	NO_X allocation for EGUs
OH	EASTLAKE	2837	6	1
OH	EDGEWATER	2857	13	65
OH	EDGEWATER	2857	A	1
OH	EDGEWATER	2857	B	1
OH	FRANK M TAIT	2847	GT1	23
OH	FRANK M TAIT	2847	GT2	25
OH	GEN J M GAVIN	8102	1	2,744
OH	GEN J M GAVIN	8102	2	2,981
OH	HAMILTON	2917	9	110
OH	J M STUART	2850	1	1,054
OH	J M STUART	2850	2	1,228
OH	J M STUART	2850	3	1,074
OH	J M STUART	2850	4	1,106
OH	KILLEN STATION	6031	2	1,706
OH	KYGER CREEK	2876	1	471
OH	KYGER CREEK	2876	2	471
OH	KYGER CREEK	2876	3	478
OH	KYGER CREEK	2876	4	465
OH	KYGER CREEK	2876	5	455
OH	LAKE SHORE	2838	18	195
OH	MAD RIVER	2860	A	2
OH	MAD RIVER	2860	B	2
OH	MIAMI FORT	2832	5–1	35
OH	MIAMI FORT	2832	5–2	35
OH	MIAMI FORT	2832	6	398
OH	MIAMI FORT	2832	7	1,044
OH	MIAMI FORT	2832	8	1,015
OH	MIAMI FORT	2832	CT2	1
OH	MUSKINGUM RIVER	2872	1	309
OH	MUSKINGUM RIVER	2872	2	316
OH	MUSKINGUM RIVER	2872	3	347
OH	MUSKINGUM RIVER	2872	4	349
OH	MUSKINGUM RIVER	2872	5	1,105
OH	NILES	2861	1	212
OH	NILES	2861	2	160
OH	NILES	2861	A	2
OH	O H HUTCHINGS	2848	H–1	24
OH	O H HUTCHING	2848	H–2	37
OH	O H HUTCHINGS	2848	H–3	64
OH	O H HUTCHINGS	2848	H–4	68
OH	O H HUTCHINGS	2848	H–5	62
OH	O H HUTCHINGS	2848	H–6	69
OH	O H HUTCHINGS	2848	H–7	1
OH	PICWAY	2843	9	141
OH	R E BURGER	2864	1	0
OH	R E BURGER	2864	2	0
OH	R E BURGER	2864	3	0
OH	R E BURGER	2864	4	0
OH	R E BURGER	2864	5	14
OH	R E BURGER	2864	6	13
OH	R E BURGER	2864	7	337
OH	R E BURGER	2864	8	274
OH	RICHARD GORSUCH	7286	1	146
OH	RICHARD GORSUCH	7286	2	138
OH	RICHARD GORSUCH	7286	3	144
OH	RICHARD GORSUCH	7286	4	146
OH	W H SAMMIS	2866	1	402
OH	W H SAMMIS	2866	2	418
OH	W H SAMMIS	2866	3	400
OH	W H SAMMIS	2866	4	415
OH	W H SAMMIS	2866	5	631
OH	W H SAMMIS	2866	6	1,221
OH	W H SAMMIS	2866	7	1,259
OH	W H ZIMMER	6019	1	2,918
OH	WALTER C BECKJORD	2830	1	167
OH	WALTER C BECKJORD	2830	2	198
OH	WALTER C BECKJORD	2830	3	281
OH	WALTER C BECKJORD	2830	4	347
OH	WALTER C BECKJORD	2830	5	481
OH	WALTER C BECKJORD	2830	6	850
OH	WALTER C BECKJORD	2830	CT1	3
OH	WALTER C BECKJORD	2830	CT2	3
OH	WALTER C BECKJORD	2830	CT3	4

ST	Plant	Plant_id	Point_id	NO_X allocation for EGUs
OH	WALTER C BECKJORD	2830	CT4	2
OH	WEST LORAIN	2869	1A	0
OH	WEST LORAIN	2869	1B	0
OH	WOODSDALE	7158	—GT1	30
OH	WOODSDALE	7158	—GT2	30
OH	WOODSDALE	7158	—GT3	39
OH	WOODSDALE	7158	—GT4	37
OH	WOODSDALE	7158	—GT5	40
OH	WOODSDALE	7158	—GT6	39
PA	AES BEAVER VALLEY	10676	032	144
PA	AES BEAVER VALLEY	10676	033	131
PA	AES BEAVER VALLEY	10676	034	133
PA	AES BEAVER VALLEY	10676	035	67
PA	ARMSTRONG	3178	1	363
PA	ARMSTRONG	3178	2	383
PA	BRUCE MANSFIELD	6094	1	1,657
PA	BRUCE MANSFIELD	6094	2	1,672
PA	BRUCE MANSFIELD	6094	3	1,636
PA	BRUNNER ISLAND	3140	1	568
PA	BRUNNER ISLAND	3140	2	718
PA	BRUNNER ISLAND	3140	3	1,539
PA	BRUNOT ISLAND	3096	2A	0
PA	BRUNOT ISLAND	3096	2B	0
PA	BRUNOT ISLAND	3096	3	0
PA	CAMBRIA COGEN	10641	1	155
PA	CAMBRIA COGEN	10641	2	161
PA	CHESWICK	8226	1	1,119
PA	COLVER POWER PROJECT	10143	1	291
PA	CONEMAUGH	3118	1	2,167
PA	CONEMAUGH	3118	2	1,995
PA	CROMBY	3159	1	377
PA	CROMBY	3159	2	201
PA	DELAWARE	3160	71	61
PA	DELAWARE	3160	81	56
PA	EBENSBURG POWER	10603	1	191
PA	EDDYSTONE	3161	1	565
PA	EDDYSTONE	3161	2	636
PA	EDDYSTONE	3161	3	207
PA	EDDYSTONE	3161	4	237
PA	ELRAMA	3098	1	214
PA	ELRAMA	3098	2	209
PA	ELRAMA	3098	3	208
PA	ELRAMA	3098	4	428
PA	FOSTER WHEELER MT. CARMEL	10343	AB_NUG	152
PA	GILBERTON POWER NUG	010113	AB_NUG	273
PA	GPU GENCO WAYNE	3134	1	8
PA	HATFIELD'S FERRY	3179	1	1,155
PA	HATFIELD'S FERRY	3179	2	1,029
PA	HATFIELD'S FERRY	3179	3	1,087
PA	HOLTWOOD	3145	17	246
PA	HOMER CITY	3122	1	1,471
PA	HOMER CITY	3122	2	1,553
PA	HOMER CITY	3122	3	1,437
PA	HUNLOCK PWR STATION	3176	6	131
PA	KEYSTONE	3136	1	2,154
PA	KEYSTONE	3136	2	2,133
PA	KIMBERLY-CLARK	3157	10	211
PA	MARTINS CREEK	3148	1	314
PA	MARTINS CREEK	3148	2	293
PA	MARTINS CREEK	3148	3	543
PA	MARTINS CREEK	3148	4	500
PA	MITCHELL	3181	1	10
PA	MITCHELL	3181	2	6
PA	MITCHELL	3181	3	9
PA	MITCHELL	3181	33	556
PA	MONTOUR	3149	1	1,560
PA	MONTOUR	3149	2	1,673
PA	MOUNTAIN	3111	1	5
PA	MOUNTAIN	3111	2	5
PA	NEW CASTLE	3138	3	190
PA	NEW CASTLE	3138	4	195
PA	NEW CASTLE	3138	5	245
PA	NORCON POWER PARTNERS LP	54571	1	103

ST	Plant	Plant_id	Point_id	NO_X allocation for EGUs
PA	NORCON POWER PARTNERS LP	54571	2	109
PA	NORTHAMPTION GENERATING	50888	1	291
PA	NORTHEASTERN POWER	50039		188
PA	PANTHER CREEK	50776	1	134
PA	PANTHER CREEK	50776	2	130
PA	PECO ENERGY CROYDEN	8012	11	11
PA	PECO ENERGY CROYDEN	8012	12	9
PA	PECO ENERGY CROYDEN	8012	21	5
PA	PECO ENERGY CROYDEN	8012	22	11
PA	PECO ENERGY CROYDEN	8012	31	13
PA	PECO ENERGY CROYDEN	8012	32	6
PA	PECO ENERGY CROYDEN	8012	41	11
PA	PECO ENERGY CROYDEN	8012	42	9
PA	PECO ENERGY RICHMOND	3168	91	10
PA	PECO ENERGY RICHMOND	3168	92	9
PA	PHILLIPS POWER STATION	3099	3	0
PA	PHILLIPS POWER STATION	3099	4	0
PA	PHILLIPS POWER STATION	3099	5	0
PA	PHILLIPS POWER STATION	3099	6	0
PA	PINEY CREEK	54144	1	102
PA	PORTLAND	3113	—5	48
PA	PORTLAND	3113	1	266
PA	PORTLAND	3113	2	412
PA	SCHUYLKILL	3169	1	84
PA	SCHUYLKILL ENERGY RESOURCES	880010	1	289
PA	SCHUYLKILL STATION (TURBI	50607	AB_NUG	701
PA	SCRUBGRASS GENERATING PLANT	50974	1	124
PA	SCRUBGRASS GENERATING PLANT	50974	2	123
PA	SEWARD	3130	12	64
PA	SEWARD	3130	14	72
PA	SEWARD	3130	15	355
PA	SHAWVILLE	3131	1	295
PA	SHAWVILLE	3131	2	294
PA	SHAWVILLE	3131	3	380
PA	SHAWVILLE	3131	4	392
PA	SUNBURY	3152	1A	134
PA	SUNBURY	3152	1B	122
PA	SUNBURY	3152	2A	130
PA	SUNBURY	3152	2B	134
PA	SUNBURY	3152	3	263
PA	SUNBURY	3152	4	302
PA	TITUS	3115	1	161
PA	TITUS	3115	2	152
PA	TITUS	3115	3	151
PA	TOLNA	3116	1	3
PA	TOLNA	3116	2	4
PA	TRIGEN ENERGY SANSOM	880006	1	12
PA	TRIGEN ENERGY SANSOM	880006	2	10
PA	TRIGEN ENERGY SANSOM	880006	3	5
PA	TRIGEN ENERGY SANSOM	880006	4	6
PA	WARREN	3132	1	47
PA	WARREN	3132	2	32
PA	WARREN	3132	3	40
PA	WARREN	3132	4	42
PA	WARREN	3132	CT1	14
PA	WESTWOOD ENERGY PROPERTIE	50611	031	98
PA	WHEELABRATOR FRACKVILLE E	50879	GEN1	161
PA	WILLIAMS GEN—HAZELTON	10870	HRSG	16
PA	WILLIAMS GEN—HAZELTON	10870	TURBN	141
VA	BELLMEADE	7696	1	76
VA	BELLMEADE	7696	2	88
VA	BREMO BLUFF	3796	3	137
VA	BREMO BLUFF	3796	4	386
VA	CHESAPEAKE	3803	1	298
VA	CHESAPEAKE	3803	2	308
VA	CHESAPEAKE	3803	3	370
VA	CHESAPEAKE	3803	4	571
VA	CHESAPEAKE CORP.	10017	ST_rp.	59
VA	CHESTERFIELD	3797	—8	263
VA	CHESTERFIELD	3797	3	232
VA	CHESTERFIELD	3797	4	389
VA	CHESTERFIELD	3797	5	769
VA	CHESTERFIELD	3797	6	1,348

ST	Plant	Plant_id	Point_id	NO_X allocation for EGUs
VA	CHESTERFIELD	3797	7	316
VA	CLINCH RIVER	3775	1	548
VA	CLINCH RIVER	3775	2	520
VA	CLINCH RIVER	3775	3	575
VA	CLOVER	7213	1	1,033
VA	CLOVER	7213	2	1,118
VA	COGENTRIX—HOPEWELL	10377	ST_ell	327
VA	COGENTRIX—PORTSMOUTH	10071	ST_uth	356
VA	COGENTRIX RICHMOND 1	54081	ST_d 1	299
VA	COGENTRIX RICHMOND 2	54081	ST_d 2	209
VA	COMMONWEALTH ATLANTIC LP	52087	GT_LP	35
VA	DARBYTOWN	7212	—1	29
VA	DARBYTOWN	7212	—2	28
VA	DARBYTOWN	7212	—3	30
VA	DARBYTOWN	7212	—4	29
VA	DOSWELL #1	52019	CA_#1	46
VA	DOSWELL #1	52019	CT_#1	94
VA	DOSWELL #2	52019	CA_#2	46
VA	DOSWELL #2	52019	CT_#2	94
VA	GLEN LYN	3776	51	101
VA	GLEN LYN	3776	52	110
VA	GLEN LYN	3776	6	487
VA	GORDONSVILLE 1	54844	CA_e 1	16
VA	GORDONSVILLE 1	54844	CT_e 1	33
VA	GORDONSVILLE 2	54844	CA_Xe 2	17
VA	GORDONSVILLE 2	54844	CT_e 2	34
VA	GRAVEL NECK	7032	—3	21
VA	GRAVEL NECK	7032	—X4	24
VA	GRAVEL NECK	7032	—5	14
VA	GRAVEL NECK	7032	—6	18
VA	HOPEWELL COGEN, INC.	10633	CT_nc.	102
VA	HOPEWELL COGEN, INC.	10633	CW_nc.	53
VA	LG&E-WESTMORELAND ALTAVISTA	10773	1	18
VA	LG&E-WESTMORELAND ALTAVISTA	10773	2	18
VA	LG&E-WESTMORELAND HOPEWELL	10771	1	17
VA	LG&E-WESTMORELAND HOPEWELL	10771	2	16
VA	LG&E-WESTMORELAND SOUTHAMPTON	10774	1	23
VA	LG&E-WESTMORELAND SOUTHAMPTON	10774	2	29
VA	MECKLENBURG	52007	ST_urg	234
VA	POSSUM POINT	3804	3	221
VA	POSSUM POINT	3804	4	528
VA	POSSUM POINT	3804	5	322
VA	POTOMAC RIVER	3788	1	203
VA	POTOMAC RIVER	3788	2	139
VA	POTOMAC RIVER	3788	3	232
VA	POTOMAC RIVER	3788	4	223
VA	POTOMAC RIVER	3788	5	222
VA	SEI BIRCHWOOD	12	1	305
VA	TASLEY	3785	10	6
VA	YORKTOWN	3809	1	386
VA	YORKTOWN	3809	2	419
VA	YORKTOWN	3809	3	764
WV	ALBRIGHT	3942	1	76
WV	ALBRIGHT	3942	2	71
WV	ALBRIGHT	3942	3	241
WV	FORT MARTIN	3943	1	887
WV	FORT MARTIN	3943	2	868
WV	GRANT TOWN	10151	ST_own	156
WV	HARRISON	3944	1	1,385
WV	HARRISON	3944	2	1,444
WV	HARRISON	3944	3	1,505
WV	JOHN E AMOS	3935	1	1,254
WV	JOHN E AMOS	3935	2	1,198
WV	JOHN E AMOS	3935	3	1,859
WV	KAMMER	3947	1	399
WV	KAMMER	3947	2	418
WV	KAMMER	3947	3	447
WV	KANAWHA RIVER	3936	1	336
WV	KANAWHA RIVER	3936	2	323
WV	MITCHELL	3948	1	1,288
WV	MITCHELL	3948	2	1,191
WV	MORGANTOWN ENERGY ASSOCIATES	27	1	80
WV	MORGANTOWN ENERGY ASSOCIATES	27	2	80

ST	Plant	Plant_id	Point_id	NO_X allocation for EGUs
WV	MOUNTAINEER (1301)	6264	1	1,952
WV	MT STORM	3954	1	1,048
WV	MT STORM	3954	2	1,127
WV	MT STORM	3954	3	1,236
WV	NORTH BRANCH	7537	1A	51
WV	NORTH BRANCH	7537	1B	53
WV	PHIL SPORN	3938	11	239
WV	PHIL SPORN	3938	21	215
WV	PHIL SPORN	3938	31	239
WV	PHIL SPORN	3938	41	230
WV	PHIL SPORN	3938	51	708
WV	PLEASANTS	6004	1	1,296
WV	PLEASANTS	6004	2	1,165
WV	RIVESVILLE	3945	7	38
WV	RIVESVILLE	3945	8	88
WV	WILLOW ISLAND	3946	1	79
WV	WILLOW ISLAND	3946	2	246

[6 FR 2727, Jan. 18, 2000, as amended at 66 FR 48575, Sept. 21, 2001]

APPENDIX B TO PART 97—FINAL SECTION 126 RULE: NON-EGU ALLOCATIONS, 2004–2007

State	County	Plant	Plant ID	Point ID	NO_X allocation for non-EGUs
DC	Washington	GSA CENTRAL HEATING PLANT	0025	003	0
DC	Washington	GSA CENTRAL HEATING PLANT	0025	004	0
DC	Washington	GSA CENTRAL HEATING PLANT	0025	005	0
DC	Washington	GSA CENTRAL HEATING PLANT	0025	006	0
DC	Washington	GSA WEST HEATING PLANT	0024	003	13
DC	Washington	GSA WEST HEATING PLANT	0024	005	12
DE	Kent	KRAFT FOODS INC	0007	001	0
DE	New Castle	MOTIVA ENTERPRISES (FORMERLY STAR ENTERPRISE, DELAWARE CITY PLANT).	0016	002	102
DE	New Castle	MOTIVA ENTERPRISES (FORMERLY STAR ENTERPRISE, DELAWARE CITY PLANT).	0016	012	118
KY	Boyd	ASHLAND OIL INC	0004	061	23
KY	Lawrence	KENTUCKY POWER CO	0003	004	0
MD	Baltimore	BETHLEHEM STEEL	0147	016	75
MD	Baltimore	BETHLEHEM STEEL	0147	017	75
MD	Baltimore	BETHLEHEM STEEL	0147	018	75
MD	Baltimore	BETHLEHEM STEEL	0147	019	75
MD	Allegany	WESTVACO	0011	001	289
MD	Allegany	WESTVACO	0011	002	373
MI	Wayne	DETROIT EDISON CO	B2810	0003	31
MI	Midland	DOW CHEMICAL USA	A4033	0401	6
MI	Midland	DOW CHEMICAL USA	A4033	0402	0
MI	Wayne	DSC LTD	B3680	0006	30
MI	Genesee	GENERAL MOTORS CORP	A1178	0501	63
MI	Genesee	GENERAL MOTORS CORP	A1178	0502	47
MI	Oakland	GENERAL MOTORS CORP	B4031	0506	22
MI	Genesee	GENERAL MOTORS CORP	A1178	0507	20
MI	Oakland	GENERAL MOTORS CORP	B4032	0510	4
MI	Kalamazoo	GEORGIA PACIFIC CORP	B4209	0005	6
MI	Kalamazoo	JAMES RIVER PAPER CO INC	B1678	0003	90
MI	Wayne	MARATHON OIL COMPANY	A9831	0001	109
MI	Allegan	MENASHA CORP	A0023	0024	71
MI	Allegan	MENASHA CORP	A0023	0025	69
MI	Ingham	MICHIGAN STATE UNIVERSITY	K3249	0053	110
MI	Ingham	MICHIGAN STATE UNIVERSITY	K3249	0054	118
MI	Ingham	MICHIGAN STATE UNIVERSITY	K3249	0055	77
MI	Ingham	MICHIGAN STATE UNIVERSITY	K3249	0056	73
MI	Washtenaw	THE REGENTS OF THE UNIVERSITY OF MICHIGAN.	M0675	0001	40
MI	Washtenaw	THE REGENTS OF THE UNIVERSITY OF MICHIGAN.	M0675	0002	37
MI	Oakland	WILLIAM BEAUMONT HOSPITAL	G5067	0010	0
MI	Oakland	WILLIAM BEAUMONT HOSPITAL	G5067	0011	0
NC	Haywood	BLUE RIDGE PAPER PRODUCTS INC	0159	005	129
NC	Haywood	CHAMPION INT CORP	0159	001	98

State	County	Plant	Plant ID	Point ID	NO_X allocation for non-EGUs
NC	Haywood	CHAMPION INT CORP	0159	002	88
NC	Haywood	CHAMPION INT CORP	0159	003	200
NC	Haywood	CHAMPION INT CORP	0159	004	176
NC	Halifax	CHAMPION INTERNATIONAL CORP. ROANOKE RAP.	0007	001	340
NC	Guilford	CONE MILLS CORP—WHITE OAK PLANT	0863	004	50
NC	Cabarrus	FIELDCREST—CANNON PLT 1 KANNAPOLIS	0006	001	77
NC	Columbus	INTERNATIONAL PAPER: RIEGELWOOD	0036	003	90
NC	Columbus	INTERNATIONAL PAPER: RIEGELWOOD	0036	004	228
NC	Martin	WEYERHAEUSER PAPER CO. PLYMOUTH	0069	001	265
NC	Craven	WEYERHAUSER COMPANY NEW BERN MILL	0104	005	205
NC	Craven	WEYERHAEUSER COMPANY NEW BERN MILL	0104	006	72
NC	Martin	WEYERHAEUSER COMPANY PLYMOUTH	0069	009	25
NJ	Middlesex	BALL—INCON GLASS PACKAGING	15035	001	46
NJ	Hudson	BEST FOODS CPC INTERNATIONAL I	10003	003	27
NJ	Middlesex	CHEVRON U.S.A., INC	15023	001	17
NJ	Middlesex	CHEVRON U.S.A., INC	15023	043	55
NJ	Gloucester	COASTAL EAGLE POINT OIL COMPAN	55004	001	3
NJ	Gloucester	COASTAL EAGLE POINT OIL COMPAN	55004	038	11
NJ	Gloucester	COASTAL EAGLE POINT OIL COMPAN	55004	039	11
NJ	Gloucester	COASTAL EAGLE POINT OIL COMPAN	55004	040	11
NJ	Gloucester	COASTAL EAGLE POINT OIL COMPAN	55004	064	38
NJ	Gloucester	COASTAL EAGLE POINT OIL COMPAN	55004	123	37
NJ	Middlesex	DEGUSSA CORPORATION-METZ DIVIS	15305	009	15
NJ	Union	EXXON CORPORATION	40003	001	57
NJ	Union	EXXON CORPORATION	40003	007	22
NJ	Union	EXXON CORPORATION	40003	014	98
NJ	Union	EXXON CORPORATION	40003	015	14
NJ	Middlesex	HERCULES INCORPORATED	15017	001	38
NJ	Middlesex	HERCULES INCORPORATED	15017	002	37
NJ	Warren	HOFFMAN LAROCHE INC	85010	034	45
NJ	Mercer	HOMASCTE COMPANY	60018	001	290
NJ	Mercer	HOMASCTE COMPANY	60018	002	312
NJ	Passaic	INTERNATIONAL VEILING CORPORAT	30098	001	22
NJ	Bergen	MALT PRODUCTS CORPORATION	00322	001	27
NJ	Atlantic	MARINA ASSOCIATES	70009	001	330
NJ	Atlantic	MARINA ASSOCIATES	70009	002	329
NJ	Atlantic	MARINA ASSOCIATES	70009	003	990
NJ	Union	MERCK & CO., INC	40009	001	66
NJ	Union	MERCK & CO., INC	40009	002	61
NJ	Union	MERCK & CO., INC	40009	003	56
NJ	Union	MERCK & CO., INC	40009	004	75
NJ	Union	MERCK & CO., INC	40009	005	89
NJ	Union	MERCK & CO., INC	40009	006	103
NJ	Gloucester	MOBIL OIL CORPORATION	55006	001	54
NJ	Gloucester	MOBIL OIL CORPORATION	55006	002	54
NJ	Gloucester	MOBIL OIL CORPORATION	55006	003	54
NJ	Gloucester	MOBIL OIL CORPORATION	55006	004	49
NJ	Gloucester	MOBIL OIL CORPORATION	55006	005	16
NJ	Gloucester	MOBIL OIL CORPORATION	55006	006	105
NJ	Gloucester	MOBIL OIL CORPORATION	55006	027	0
NJ	Gloucester	MOBIL OIL CORPORATION	55006	270	14
NJ	Monmouth	NESTLE CO., INC., THE	20004	006	13
NJ	Monmouth	NESTLE CO., INC., THE	20004	007	13
NJ	Middlesex	NEW JERSEY STEEL CORPORATION	15076	001	18
NJ	Gloucester	PETROLEUM RECYCLING, INC	55180	020	169
NJ	Atlantic	SCOTT PAPER COMPANY	70011	002	89
NJ	Atlantic	SCOTT PAPER COMPANY	70011	003	75
NJ	Atlantic	SCOTT PAPER COMPANY	70011	004	99
NJ	Mercer	STONY BROOK REGIONAL SEWERAGE	60248	001	55
NJ	Mercer	STONY BROOK REGIONAL SEWERAGE	60248	002	55
NY	Kings	HUDSON AVENUE	2496	B71	19
NY	Kings	HUDSON AVENUE	2496	B72	19
NY	Kings	HUDSON AVENUE	2496	B81	19
NY	Kings	HUDSON AVENUE	2496	B82	19
NY	Queens	RAVENSWOOD-A-HOUSE	CE03	B01	15
NY	Queens	RAVENSWOOD-A-HOUSE	CE03	B02	15
NY	Queens	RAVENSWOOD-A-HOUSE	CE03	B03	21
NY	Queens	RAVENSWOOD-A-HOUSE	CE03	B04	21
OH	Butler	AK STEEL (FORMERLY ARMCO STEEL CO.)	1409010006	P009	66
OH	Butler	AK STEEL (FORMERLY ARMCO STEEL CO.)	1409010006	P010	66
OH	Butler	AK STEEL (FORMERLY ARMCO STEEL CO.)	1409010006	P011	66

State	County	Plant	Plant ID	Point ID	NO_X allocation for non-EGUs
OH	Butler	AK STEEL (FORMERLY ARMCO STEEL CO.)	1409010006	P012	66
OH	Stark	ASHLAND PETROLEUM COMPANY	1576000301	B015	18
OH	Lucas	BP OIL COMPANY, TOLEDO REFINERY	0448020007	B004	39
OH	Lucas	BP OIL COMPANY, TOLEDO REFINERY	0448020007	B020	102
OH	Montgomery	CARGILL INCORPORATED	0857041124	B004	133
OH	Montgomery	CARGILL INCORPORATED	0857041124	B006	1
OH	Butler	CHAMPION INTERNATIONAL CORP	1409040212	B010	267
OH	Summit	GOODYEAR TIRE & RUBBER COMPANY	1677010193	B001	101
OH	Summit	GOODYEAR TIRE & RUBBER COMPANY	1677010193	B002	108
OH	Hamilton	HENKEL CORP.—EMERY GROUP	1431070035	B027	209
OH	Cuyahoga	LTV STEEL COMPANY, INC	1318001613	B001	139
OH	Cuyahoga	LTV STEEL COMPANY, INC	1318001613	B002	150
OH	Cuyahoga	LTV STEEL COMPANY, INC	1318001613	B003	159
OH	Cuyahoga	LTV STEEL COMPANY, INC	1318001613	B004	158
OH	Cuyahoga	LTV STEEL COMPANY, INC	1318001613	B007	155
OH	Cuyahoga	LTV STEEL COMPANY, INC	1318001613	B905	14
OH	Ross	MEAD CORPORATION	0671010028	B001	185
OH	Ross	MEAD CORPORATION	0671010028	B002	208
OH	Ross	MEAD CORPORATION	0671010028	B003	251
OH	Scioto	NEW BOSTON COKE CORP	0773010004	B008	20
OH	Scioto	NEW BOSTON COKE CORP	0773010004	B009	15
OH	Hamilton	PROCTER & GAMBLE CO	1431390903	B021	72
OH	Hamilton	PROCTER & GAMBLE CO	1431390903	B022	296
OH	Lorain	REPUBLIC ENGINEERED STEELS, INC. (FORMERLY USS/KOBE STEEL—LORAIN WORKS).	0247080229	B013	159
OH	Lawrence	SOUTH POINT ETHANOL	0744000009	B003	107
OH	Lawrence	SOUTH POINT ETHANOL	0744000009	B004	107
OH	Lawrence	SOUTH POINT ETHANOL	0744000009	B007	107
OH	Lucas	SUN REFINING & MARKETING CO, TOLEDO REF	0448010246	B044	47
OH	Lucas	SUN REFINING & MARKETING CO, TOLEDO REF	0448010246	B046	34
OH	Lucas	SUN REFINING & MARKETING CO, TOLEDO REF	0448010246	B047	18
OH	Trumbull	W C I STEEL, INC	0278000463	B001	113
OH	Trumbull	W C I STEEL, INC	0278000463	B004	142
PA	Northampton	BETHLEHEM STEEL CORP	0048	041	100
PA	Northampton	BETHLEHEM STEEL CORP	0048	042	66
PA	Northampton	BETHLEHEM STEEL CORP	0048	067	165
PA	Armstrong	BMG ASPHALT CO	0004	101	0
PA	Erie	GENERAL ELECTRIC	0009	032	16
PA	York	GLATFELTER, P. H. CO	0016	031	0
PA	York	GLATFELTER, P. H. CO	0016	034	137
PA	York	GLATFELTER, P. H. CO	0016	035	112
PA	York	GLATFELTER, P. H. CO	0016	036	211
PA	Clinton	INTERNATIONAL PAPER: LOCKHAVEN	0008	033	101
PA	Clinton	INTERNATIONAL PAPER: LOCKHAVEN	0008	034	90
PA	Delaware	KIMBERLY CLARK (FORMERLY SCOTT PAPER CO.).	0016	034	1
PA	Delaware	KIMBERLY CLARK (FORMERLY SCOTT PAPER CO.).	0016	035	345
PA	Allegheny	LTV STEEL COMPANY—PITTSBURGH WORKS	0022	015	25
PA	Allegheny	LTV STEEL COMPANY—PITTSBURGH WORKS	0022	017	15
PA	Allegheny	LTV STEEL COMPANY—PITTSBURGH WORKS	0022	019	29
PA	Allegheny	LTV STEEL COMPANY—PITTSBURGH WORKS	0022	021	55
PA	Montgomery	MERCK SHARP & DOHME	0028	039	126
PA	Westmoreland	MONESSEN INC	0007	031	0
PA	Bucks	PECO	0055	043	15
PA	Bucks	PECO	0055	045	32
PA	Bucks	PECO	0055	044	77
PA	Wyoming	PROCTER & GAMBLE CO	0009	035	187
PA	Allegheny	SHENANGO IRON & COKE WORKS	0050	006	18
PA	Allegheny	SHENANGO IRON & COKE WORKS	0050	009	15
PA	Delaware	SUN REFINING & MARKETING CO	0025	089	102
PA	Delaware	SUN REFINING & MARKETING CO	0025	090	163
PA	Philadelphia	SUN REFINING AND MARKETING 1 O	1501	020	49
PA	Philadelphia	SUN REFINING AND MARKETING 1 O	1501	021	83
PA	Philadelphia	SUN REFINING AND MARKETING 1 O	1501	022	105
PA	Philadelphia	SUN REFINING AND MARKETING 1 O	1501	023	127
PA	Philadelphia	SUNOCO (FORMERLY ALLIED CHEMICAL CORP)	1551	052	86
PA	Perry	TEXAS EASTERN GAS PIPELINE COMPANY	0001	031	0
PA	Berks	TEXAS EASTERN GAS PIPELINE COMPANY	0087	031	98
PA	Delaware	TOSCO REFINING (FORMERLY BP OIL, INC.)	0030	032	71
PA	Delaware	TOSCO REFINING (FORMERLY BP OIL, INC.)	0030	033	80
PA	Philadelphia	U.S. NAVAL BASE	9702	016	0

State	County	Plant	Plant ID	Point ID	NO_X allocation for non-EGUs
PA	Philadelphia	U.S. NAVAL BASE	9702	017	1
PA	Philadelphia	U.S. NAVAL BASE	9702	098	0
PA	Philadelphia	U.S. NAVAL BASE	9702	099	0
PA	Elk	WILLAMETTE INDUSTRIES (FORMERLY PENNTECH PAPERS, INC.	0005	040	90
PA	Elk	WILLAMETTE INDUSTRIES (FORMERLY PENNTECH PAPERS, INC.	0005	041	89
PA	Beaver	ZINC CORPORATION OF AMERICA	0032	034	176
PA	Beaver	ZINC CORPORATION OF AMERICA	0032	035	180
VA	Hopewell	ALLIED-SIGNAL INC	0026	002	499
VA	York	AMOCO OIL CO	0004	001	25
VA	Giles	CELANESE ACETATE LLC (FORMERLY HOECHST CELANESE CORP).	0004	007	148
VA	Giles	CELANESE ACETATE LLC (FORMERLY HOECHST CELANESE CORP).	0004	014	56
VA	Pittsylvania	DAN RIVER INC. (SCHOOLFIELD DIV)	0002	003	49
VA	Bedford	GEORGIA-PACIFIC—BIG ISLAND MILL	0003	002	86
VA	Isle Of Wight	INTERNATIONAL PAPER—FRANKLIN (FORMERLY UNION CAMP CORP/FINE PAPER DIV).	0006	003	272
VA	Hopewell	JAMES RIVER COGENERATION (COGE	0055	001	511
VA	Hopewell	JAMES RIVER COGENERATION (COGE	0055	002	512
VA	King William	ST. LAURENT PAPER PRODUCTS CORP.	0001	003	253
VA	Alleghany	WESTVACO CORP	0003	001	253
VA	Alleghany	WESTVACO CORP	0003	002	130
VA	Alleghany	WESTVACO CORP	0003	003	195
VA	Alleghany	WESTVACO CORP	0003	004	373
VA	Alleghany	WESTVACO CORP	0003	005	170
VA	Alleghany	WESTVACO CORP	0003	011	105
WV	Kanawha	AVENTIS CROPSCIENCE	00007	010	113
WV	Kanawha	AVENTIS CROPSCIENCE	00007	011	102
WV	Kanawha	AVENTIS CROPSCIENCE	00007	012	105
WV	Kanawha	DUPONT—BELLE	00001	612	54
WV	Fayette	ELKEM METALS COMPANY L.P.—ALLOY P PLANT.	00001	006	116
WV	Marshall	PPG INDUSTRIES, INC	00002	001	195
WV	Marshall	PPG INDUSTRIES, INC	00002	003	419
WV	Kanawha	RHONE-POLUENC	00007	070	8
WV	Kanawha	RHONE-POLUENC	00007	071	73
WV	Kanawha	RHONE-POLUENC	00007	080	7
WV	Kanawha	RHONE-POLUENC	00007	081	66
WV	Kanawha	RHONE-POLUENC	00007	090	8
WV	Kanawha	RHONE-POLUENC	00007	091	68
WV	Kanawha	UNION CARBIDE—SOUTH CHARLESTON PLANT	00003	0B6	66
WV	Kanawha	UNION CARBIDE—SOUTH CHARLESTON PLANT	0003	0B6	92
WV	Kanawha	UNION CARBIDE—SOUTH CHARLESTON PLANT	0003	0B7	45
WV	Hancock	WEIRTON STEEL CORPORATION	00001	030	31
WV	Hancock	WEIRTON STEEL CORPORATION	00001	088	30
WV	Hancock	WEIRTON STEEL CORPORATION	00001	089	2
WV	Hancock	WEIRTON STEEL CORPORATION	00001	090	110
WV	Hancock	WEIRTON STEEL CORPORATION	00001	091	253
WV	Hancock	WEIRTON STEEL CORPORATION	00001	092	208
WV	Hancock	WEIRTON STEEL CORPORATION	00001	093	200

[65 FR 2727, Jan. 18, 2000, as amended at 66 FR 48576, Sept. 21, 2001]

APPENDIX C TO PART 97—FINAL SECTION 126 RULE: TRADING BUDGET

ST	F126–EGU	F126–NEGU	Total
DC	207	26	233
DE	4,306	232	4,538
IN	7,088	82	7,170
KY	19,654	53	19,707
MD	14,519	1,013	15,532
MI	25,689	2,166	27,855
NC	31,212	2,329	33,541
NJ	9,716	4,838	14,554
NY	16,081	156	16,237
OH	45,432	4,103	49,535
PA	47,224	3,619	50,843
VA	17,091	4,104	21,195

ST	F126–EGU	F126–NEGU	Total
WV	26,859	2,184	29,043
Total	265,078	24,905	289,983

APPENDIX D TO PART 97—FINAL SECTION 126 RULE: STATE COMPLIANCE SUPPLEMENT POOLS FOR THE SECTION 126 FINAL RULE (TONS)

State	Compliance supplement pool
Delaware	168
District of Columbia	0
Indiana	2,454
Kentucky	7,314
Maryland	3,882
Michigan	9,398
New Jersey	1,550
New York	1,379
North Carolina	10,737
Ohio	22,301
Pennsylvania	15,763
Virginia	5,504
West Virginia	16,709
Total	97,159

PART 98—MANDATORY GREENHOUSE GAS REPORTING

Subpart A—General Provisions

Sec.
98.1 Purpose and scope.
98.2 Who must report?
98.3 What are the general monitoring, reporting, recordkeeping and verification requirements of this part?
98.4 Authorization and responsibilities of the designated representative.
98.5 How is the report submitted?
98.6 Definitions.
98.7 What standardized methods are incorporated by reference into this part?
98.8 What are the compliance and enforcement provisions of this part?
98.9 Addresses.
TABLE A–1 TO SUBPART A OF PART 98—GLOBAL WARMING POTENTIALS (100-YEAR TIME HORIZON)
TABLE A–2 TO SUBPART A OF PART 98—UNITS OF MEASURE CONVERSIONS

Subpart B [Reserved]

Subpart C—General Stationary Fuel Combustion Sources

98.30 Definition of the source category.
98.31 Reporting threshold.
98.32 GHGs to report.
98.33 Calculating GHG emissions.
98.34 Monitoring and QA/QC requirements.
98.35 Procedures for estimating missing data.
98.36 Data reporting requirements.
98.37 Records that must be retained.
98.38 Definitions.
TABLE C–1 TO SUBPART C OF PART 98—DEFAULT CO_2 EMISSION FACTORS AND HIGH HEAT VALUES FOR VARIOUS TYPES OF FUEL
TABLE C–2 TO SUBPART C OF PART 98—DEFAULT CH_4 AND N_2O EMISSION FACTORS FOR VARIOUS TYPES OF FUEL
TABLE C–2 TO SUBPART C OF PART 98—DEFAULT CH_4 AND N_2O EMISSION FACTORS FOR VARIOUS TYPES OF FUEL

Subpart D—Electricity Generation

98.40 Definition of the source category.
98.41 Reporting threshold.
98.42 GHGs to report.
98.43 Calculating GHG emissions.
98.44 Monitoring and QA/QC requirements.
98.45 Procedures for estimating missing data.
98.46 Data reporting requirements.
98.47 Records that must be retained.
98.48 Definitions.

Subpart E—Adipic Acid Production

98.50 Definition of source category.
98.51 Reporting threshold.
98.52 GHGs to report.
98.53 Calculating GHG emissions.
98.54 Monitoring and QA/QC requirements.
98.55 Procedures for estimating missing data.
98.56 Data reporting requirements.
98.57 Records that must be retained.
98.58 Definitions.

Subpart F—Aluminum Production

98.60 Definition of the source category.
98.61 Reporting threshold.
98.62 GHGs to report.
98.63 Calculating GHG emissions.
98.64 Monitoring and QA/QC requirements.
98.65 Procedures for estimating missing data.
98.66 Data reporting requirements.
98.67 Records that must be retained.
98.68 Definitions.

TABLE F–1 TO SUBPART F OF PART 98—SLOPE AND OVERVOLTAGE COEFFICIENTS FOR THE CALCULATION OF PFC EMISSIONS FROM ALUMINUM PRODUCTION

TABLE F–2 TO SUBPART F OF PART 98—DEFAULT DATA SOURCES FOR PARAMETERS USED FOR CO_2 EMISSIONS

Subpart G—Ammonia Manufacturing

98.70 Definition of source category.
98.71 Reporting threshold.
98.72 GHGs to report.
98.73 Calculating GHG emissions.
98.74 Monitoring and QA/QC requirements.
98.75 Procedures for estimating missing data.
98.76 Data reporting requirements.
98.77 Records that must be retained.
98.78 Definitions.

Subpart H—Cement Production

98.80 Definition of the source category.
98.81 Reporting threshold.
98.82 GHGs to report.
98.83 Calculating GHG emissions.
98.84 Monitoring and QA/QC requirements.
98.85 Procedures for estimating missing data.
98.86 Data reporting requirements.
98.87 Records that must be retained.
98.88 Definitions.

Subparts I–J [Reserved]

Subpart K—Ferroalloy Production

98.110 Definition of the source category.
98.111 Reporting threshold.
98.112 GHGs to report.
98.113 Calculating GHG emissions.
98.114 Monitoring and QA/QC requirements.
98.115 Procedures for estimating missing data.
98.116 Data reporting requirements.
98.117 Records that must be retained.
98.118 Definitions.

TABLE K–1 TO SUBPART K OF PART 98—ELECTRIC ARC FURNACE (EAF) CH_4 EMISSION FACTORS

Subparts L–M [Reserved]

Subpart N—Glass Production

98.140 Definition of the source category.
98.141 Reporting threshold.
98.142 GHGs to report.
98.143 Calculating GHG emissions.
98.144 Monitoring and QA/QC requirements.
98.145 Procedures for estimating missing data.
98.146 Data reporting requirements.
98.147 Records that must be retained.
98.148 Definitions.

TABLE N–1 TO SUBPART N OF PART 98—CO_2 EMISSION FACTORS FOR CARBONATE-BASED RAW MATERIALS

Subpart O—HCFC–22 Production and HFC–23 Destruction

98.150 Definition of the source category.
98.151 Reporting threshold.
98.152 GHGs to report.
98.153 Calculating GHG emissions.
98.154 Monitoring and QA/QC requirements.
98.155 Procedures for estimating missing data.
98.156 Data reporting requirements.
98.157 Records that must be retained.
98.158 Definitions.

TABLE O–1 TO SUBPART O OF PART 98—EMISSION FACTORS FOR EQUIPMENT LEAKS

Subpart P—Hydrogen Production

98.160 Definition of the source category.
98.161 Reporting threshold.
98.162 GHGs to report.
98.163 Calculating GHG emissions.
98.164 Monitoring and QA/QC requirements.
98.165 Procedures for estimating missing data.
98.166 Data reporting requirements.
98.167 Records that must be retained.
98.168 Definitions.

Subpart Q—Iron and Steel Production

98.170 Definition of the source category.
98.171 Reporting threshold.
98.172 GHGs to report.
98.173 Calculating GHG emissions.
98.174 Monitoring and QA/QC requirements.
98.175 Procedures for estimating missing data.
98.176 Data reporting requirements.
98.177 Records that must be retained.
98.178 Definitions.

Subpart R—Lead Production

98.180 Definition of the source category.
98.181 Reporting threshold.
98.182 GHGs to report.
98.183 Calculating GHG emissions.
98.184 Monitoring and QA/QC requirements.
98.185 Procedures for estimating missing data.

98.186 Data reporting procedures.
98.187 Records that must be retained.
98.188 Definitions.

Subpart S—Lime Manufacturing

98.190 Definition of the source category.
98.191 Reporting threshold.
98.192 GHGs to report.
98.193 Calculating GHG emissions.
98.194 Monitoring and QA/QC requirements.
98.195 Procedures for estimating missing data.
98.196 Data reporting requirements.
98.197 Records that must be retained.
98.198 Definitions.
TABLE S–1 TO SUBPART S OF PART 98—BASIC PARAMETERS FOR THE CALCULATION OF EMISSION FACTORS FOR LIME PRODUCTION

Subpart T [Reserved]

Subpart U—Miscellaneous Uses of Carbonate

98.210 Definition of the source category.
98.211 Reporting threshold.
98.212 GHGs to report.
98.213 Calculating GHG emissions.
98.214 Monitoring and QA/QC requirements.
98.215 Procedures for estimating missing data.
98.216 Data reporting requirements.
98.217 Records that must be retained.
98.218 Definitions.
TABLE U–1 TO SUBPART U OF PART 98—CO_2 EMISSION FACTORS FOR COMMON CARBONATES

Subpart V—Nitric Acid Production

98.220 Definition of source category.
98.221 Reporting threshold.
98.222 GHGs to report.
98.223 Calculating GHG emissions.
98.224 Monitoring and QA/QC requirements.
98.225 Procedures for estimating missing data.
98.226 Data reporting requirements.
98.227 Records that must be retained.
98.228 Definitions.

Subpart W [Reserved]

Subpart X—Petrochemical Production

98.240 Definition of the source category.
98.241 Reporting threshold.
98.242 GHGs to report.
98.243 Calculating GHG emissions.
98.244 Monitoring and QA/QC requirements.
98.245 Procedures for estimating missing data.
98.246 Data reporting requirements.
98.247 Records that must be retained.
98.248 Definitions.

Subpart Y—Petroleum Refineries

98.250 Definition of source category.
98.251 Reporting threshold.
98.252 GHGs to report.
98.253 Calculating GHG emissions.
98.254 Monitoring and QA/QC requirements.
98.255 Procedures for estimating missing data.
98.256 Data reporting requirements.
98.257 Records that must be retained.
98.258 Definitions.

Subpart Z—Phosphoric Acid Production

98.260 Definition of the source category.
98.261 Reporting threshold.
98.262 GHGs to report.
98.263 Calculating GHG emissions.
98.264 Monitoring and QA/QC requirements.
98.265 Procedures for estimating missing data.
98.266 Data reporting requirements.
98.267 Records that must be retained.
98.268 Definitions.
TABLE Z–1 TO SUBPART Z OF PART 98—DEFAULT CHEMICAL COMPOSITION OF PHOSPHATE ROCK BY ORIGIN

Subpart AA—Pulp and Paper Manufacturing

98.270 Definition of source category.
98.271 Reporting threshold.
98.272 GHGs to report.
98.273 Calculating GHG emissions.
98.274 Monitoring and QA/QC requirements.
98.275 Procedures for estimating missing data.
98.276 Data reporting requirements.
98.277 Records that must be retained.
98.278 Definitions.
TABLE AA–1 TO SUBPART AA OF PART 98—KRAFT PULPING LIQUOR EMISSIONS FACTORS FOR BIOMASS-BASED CO_2, CH_4, AND N_2O
TABLE AA–2 TO SUBPART AA OF PART 98—KRAFT LIME KILN AND CALCINER EMISSIONS FACTORS FOR FOSSIL FUEL-BASED CO_2, CH_4, AND N_2O

Subpart BB—Silicon Carbide Production

98.280 Definition of the source category.
98.281 Reporting threshold.
98.282 GHGs to report.
98.283 Calculating GHG emissions.
98.284 Monitoring and QA/QC requirements.
98.285 Procedures for estimating missing data.
98.286 Data reporting requirements.
98.287 Records that must be retained.
98.288 Definitions.

Subpart CC—Soda Ash Manufacturing

98.290 Definition of the source category.

98.291 Reporting threshold.
98.292 GHGs to report.
98.293 Calculating GHG emissions.
98.294 Monitoring and QA/QC requirements.
98.295 Procedures for estimating missing data.
98.296 Data reporting requirements.
98.297 Records that must be retained.
98.298 Definitions.

Subpart DD [Reserved]

Subpart EE—Titanium Dioxide Production

98.310 Definition of the source category.
98.311 Reporting threshold.
98.312 GHGs to report.
98.313 Calculating GHG emissions.
98.314 Monitoring and QA/QC requirements.
98.315 Procedures for estimating missing data.
98.316 Data reporting requirements.
98.317 Records that must be retained.
98.318 Definitions.

Subpart FF [Reserved]

Subpart GG—Zinc Production

98.330 Definition of the source category.
98.331 Reporting threshold.
98.332 GHGs to report.
98.333 Calculating GHG emissions.
98.334 Monitoring and QA/QC requirements.
98.335 Procedures for estimating missing data.
98.336 Data reporting requirements.
98.337 Records that must be retained.
98.338 Definitions.

Subpart HH—Municipal Solid Waste Landfills

98.340 Definition of the source category.
98.341 Reporting threshold.
98.342 GHGs to report.
98.343 Calculating GHG emissions.
98.344 Monitoring and QA/QC requirements.
98.345 Procedures for estimating missing data.
98.346 Data reporting requirements.
98.347 Records that must be retained.
98.348 Definitions.
TABLE HH–1 TO SUBPART HH OF PART 98—EMISSIONS FACTORS, OXIDATION FACTORS AND METHODS
TABLE HH–2 TO SUBPART HH OF PART 98—U.S. PER CAPITA WASTE DISPOSAL RATES
TABLE HH–3 TO SUBPART HH OF PART 98—LANDFILL GAS COLLECTION EFFICIENCIES

Subpart II [Reserved]

Subpart JJ—Manure Management

98.360 Definition of the source category.
98.361 Reporting threshold.
98.362 GHGs to report.
98.363 Calculating GHG emissions.
98.364 Monitoring and QA/QC requirements.
98.365 Procedures for estimating missing data.
98.366 Data reporting requirements.
98.367 Records that must be retained.
98.368 Definitions.
TABLE JJ–1 TO SUBPART JJ OF PART 98—ANIMAL POPULATION THRESHOLD LEVEL BELOW WHICH FACILITIES ARE NOT REQUIRED TO REPORT EMISSIONS UNDER SUBPART JJ
TABLE JJ–2 TO SUBPART JJ OF PART 98—WASTE CHARACTERISTICS DATA
TABLE JJ–3 TO SUBPART JJ OF PART 98—STATE-SPECIFIC VOLATILE SOLIDS (VS) AND NITROGEN (N) EXCRETION RATES FOR CATTLE
TABLE JJ–4 TO SUBPART JJ OF PART 98—VOLATILE SOLIDS AND NITROGEN REMOVAL THROUGH SOLIDS SEPARATION
TABLE JJ–5 TO SUBPART JJ OF PART 98—METHANE CONVERSION FACTORS
TABLE JJ–6 TO SUBPART JJ OF PART 98—COLLECTION EFFICIENCIES OF ANAEROBIC DIGESTERS
TABLE JJ–7 TO SUBPART JJ OF PART 98—NITROUS OXIDE EMISSION FACTORS (KG N_2O–N/KG KJDL N)

Subpart KK [Reserved]

Subpart LL—Suppliers of Coal-based Liquid Fuels

98.380 Definition of the source category.
98.381 Reporting threshold.
98.382 GHGs to report.
98.383 Calculating GHG emissions.
98.384 Monitoring and QA/QC requirements.
98.385 Procedures for estimating missing data.
98.386 Data reporting requirements.
98.387 Records that must be retained.
98.388 Definitions.

Subpart MM—Suppliers of Petroleum Products

98.390 Definition of the source category.
98.391 Reporting threshold.
98.392 GHGs to report.
98.393 Calculating GHG emissions.
98.394 Monitoring and QA/QC requirements.
98.395 Procedures for estimating missing data.
98.396 Data reporting requirements.
98.397 Records that must be retained.
98.398 Definitions.
TABLE MM–1 TO SUBPART MM—DEFAULT FACTORS FOR PETROLEUM PRODUCTS AND NATURAL GAS LIQUIDS
TABLE MM–2 TO SUBPART MM—DEFAULT FACTORS FOR BIOMASS-BASED FUELS AND BIOMASS

Subpart NN—Suppliers of Natural Gas and Natural Gas Liquids

98.400 Definition of the source category.
98.401 Reporting threshold.
98.402 GHGs to report.
98.403 Calculating GHG emissions.
98.404 Monitoring and QA/QC requirements.
98.405 Procedures for estimating missing data.
98.406 Data reporting requirements.
98.407 Records that must be retained.
98.408 Definitions.
TABLE NN–1 TO SUBPART NN OF PART 98—DEFAULT FACTORS FOR CALCULATION METHODOLOGY 1 OF THIS SUBPART
TABLE NN–2 TO SUBPART NN OF PART 98—LOOKUP DEFAULT VALUES FOR CALCULATION METHODOLOGY 2 OF THIS SUBPART

Subpart OO—Suppliers of Industrial Greenhouse Gases

98.410 Definition of the source category.
98.411 Reporting threshold.
98.412 GHGs to report.
98.413 Calculating GHG emissions.
98.414 Monitoring and QA/QC requirements.
98.415 Procedures for estimating missing data.
98.416 Data reporting requirements.
98.417 Records that must be retained.
98.418 Definitions.

Subpart PP—Suppliers of Carbon Dioxide

98.420 Definition of the source category.
98.421 Reporting threshold.
98.422 GHGs to report.
98.423 Calculating CO_2 supply.
98.424 Monitoring and QA/QC requirements.
98.425 Procedures for estimating missing data.
98.426 Data reporting requirements.
98.427 Records that must be retained.
98.428 Definitions.

AUTHORITY: 42 U.S.C. 7401, *et seq.*

SOURCE: 74 FR 56374, Oct. 30, 2009, unless otherwise noted.

Subpart A—General Provision

§ 98.1 Purpose and scope.

(a) This part establishes mandatory greenhouse gas (GHG) reporting requirements for owners and operators of certain facilities that directly emit GHG as well as for certain fossil fuel suppliers and industrial GHG suppliers. For suppliers, the GHGs reported are the quantity that would be emitted from combustion or use of the products supplied.

(b) Owners and operators of facilities and suppliers that are subject to this part must follow the requirements of subpart A and all applicable subparts of this part. If a conflict exists between a provision in subpart A and any other applicable subpart, the requirements of the subparts B through PP of this part shall take precedence.

§ 98.2 Who must report?

(a) The GHG reporting requirements and related monitoring, recordkeeping, and reporting requirements of this part apply to the owners and operators of any facility that is located in the United States and that meets the requirements of either paragraph (a)(1), (a)(2), or (a)(3) of this section; and any supplier that meets the requirements of paragraph (a)(4) of this section:

(1) A facility that contains any source category (as defined in subparts C through JJ of this part) that is listed in this paragraph (a)(1) in any calendar year starting in 2010. For these facilities, the annual GHG report must cover all source categories and GHGs for which calculation methodologies are provided in subparts C through JJ of this part.

(i) Electricity generation (units that report CO_2 emissions year-round through 40 CFR part 75).

(ii) Adipic acid production.

(iii) Aluminum production.

(iv) Ammonia manufacturing.

(v) Cement production.

(vi) HCFC–22 production.

(vii) HFC–23 destruction processes that are not collocated with a HCFC–22 production facility and that destroy more than 2.14 metric tons of HFC–23 per year.

(viii) Lime manufacturing.

(ix) Nitric acid production.

(x) Petrochemical production.

(xi) Petroleum refineries.

(xii) Phosphoric acid production.

(xiii) Silicon carbide production.

(xiv) Soda ash production.

(xv) Titanium dioxide production.

(xvi) Municipal solid waste landfills that generate CH_4 in amounts equivalent to 25,000 metric tons CO_2e or more per year, as determined according to subpart HH of this part.

(xvii) Manure management systems with combined CH_4 and N_2O emissions

in amounts equivalent to 25,000 metric tons CO_2e or more per year, as determined according to subpart JJ of this part.

(2) A facility that contains any source category (as defined in subparts C through JJ of this part) that is listed in this paragraph (a)(2) in any calendar year starting in 2010 and that emits 25,000 metric tons CO_2e or more per year in combined emissions from stationary fuel combustion units, miscellaneous uses of carbonate, and all source categories that are listed in this paragraph. For these facilities, the annual GHG report must cover all source categories and GHGs for which calculation methodologies are provided in subparts C through JJ of this part.

(i) Ferroalloy Production.

(ii) Glass Production.

(iii) Hydrogen Production.

(iv) Iron and Steel Production.

(v) Lead Production.

(vi) Pulp and Paper Manufacturing.

(vii) Zinc Production.

(3) *A facility that in any calendar year starting in 2010 meets all three of the conditions listed in this paragraph (a)(3).* For these facilities, the annual GHG report must cover emissions from stationary fuel combustion sources only.

(i) The facility does not meet the requirements of either paragraph (a)(1) or (a)(2) of this section.

(ii) The aggregate maximum rated heat input capacity of the stationary fuel combustion units at the facility is 30 mmBtu/hr or greater.

(iii) The facility emits 25,000 metric tons CO_2e or more per year in combined emissions from all stationary fuel combustion sources.

(4) A supplier (as defined in subparts KK through PP of this part) that provides products listed in this paragraph (a)(4) in any calendar year starting in 2010. For these suppliers, the annual GHG report must cover all applicable products for which calculation methodologies are provided in subparts KK through PP of this part.

(i) Coal-to-liquids suppliers, as specified in this paragraph (a)(4)(i).

(A) All producers of coal-to-liquid products.

(B) Importers of an annual quantity of coal-to-liquid products that is equivalent to 25,000 metric tons CO_2e or more.

(C) Exporters of an annual quantity of coal-to-liquid products is equivalent to 25,000 metric tons CO_2e or more.

(ii) Petroleum product suppliers, as specified in this paragraph (a)(4)(ii):

(A) All petroleum refineries that distill crude oil.

(B) Importers of an annual quantity of petroleum products that is equivalent to 25,000 metric tons CO_2e or more.

(C) Exporters of an annual quantity of petroleum products that is equivalent to 25,000 metric tons CO_2e or more.

(iii) Natural gas and natural gas liquids suppliers, as specified in this paragraph (a)(4)(iii):

(A) All natural gas fractionators.

(B) All local natural gas distribution companies.

(iv) Industrial greenhouse gas suppliers, as specified in this paragraph (a)(4)(iv):

(A) All producers of industrial greenhouse gases.

(B) Importers of industrial greenhouse gases with annual bulk imports of N_2O, fluorinated GHG, and CO_2 that in combination are equivalent to 25,000 metric tons CO_2e or more.

(C) Exporters of industrial greenhouse gases with annual bulk exports of N_2O, fluorinated GHG, and CO_2 that in combination are equivalent to 25,000 metric tons CO_2e or more.

(v) Carbon dioxide suppliers, as specified in this paragraph (a)(4)(v).

(A) All producers of CO_2.

(B) Importers of CO_2 with annual bulk imports of N_2O, fluorinated GHG, and CO_2 that in combination are equivalent to 25,000 metric tons CO_2e or more.

(C) Exporters of CO_2 with annual bulk exports of N_2O, fluorinated GHG, and CO_2 that in combination are equivalent to 25,000 metric tons CO_2e or more.

(5) Research and development activities are not considered to be part of any source category defined in this part.

(b) To calculate GHG emissions for comparison to the 25,000 metric ton CO_2e per year emission threshold in paragraph (a)(2) of this section, the owner or operator shall calculate annual CO_2e emissions, as described in

paragraphs (b)(1) through (b)(4) of this section.

(1) Calculate the annual emissions of CO_2, CH_4, N_2O,and each fluorinated GHG in metric tons from all applicable source categories listed in paragraph (a)(2) of this section. The GHG emissions shall be calculated using the calculation methodologies specified in each applicable subpart and available company records. Include emissions from only those gases listed in Table A–1 of this subpart.

(2) For each general stationary fuel combustion unit, calculate the annual CO_2 emissions in metric tons using any of the four calculation methodologies specified in § 98.33(a). Calculate the annual CH_4 and N_2O emissions from the stationary fuel combustion sources in metric tons using the appropriate equation in § 98.33(c). Exclude carbon dioxide emissions from the combustion of biomass, but include emissions of CH_4 and N_2O from biomass combustion.

(3) For miscellaneous uses of carbonate, calculate the annual CO_2 emissions in metric tons using the procedures specified in subpart U of this part.

(4) Sum the emissions estimates from paragraphs (b)(1), (b)(2), and (b)(3) of this section for each GHG and calculate metric tons of CO_2e using Equation A–1 of this section.

$$CO_2e = \sum_{i=1}^{n} GHG_i \text{ x } GWP_i \qquad \text{(Eq. A-1)}$$

Where:

CO_2e = Carbon dioxide equivalent, metric tons/year.

GHG_i = Mass emissions of each greenhouse gas listed in Table A–1 of this subpart, metric tons/year.

GWP_i = Global warming potential for each greenhouse gas from Table A–1 of this subpart.

n = The number of greenhouse gases emitted.

(5) For purpose of determining if an emission threshold has been exceeded, include in the emissions calculation any CO_2 that is captured for transfer off site.

(c) To calculate GHG emissions for comparison to the 25,000 metric ton CO_2e/year emission threshold for stationary fuel combustion under paragraph (a)(3) of this section, calculate CO_2, CH_4, and N_2O emissions from each stationary fuel combustion unit by following the methods specified in paragraph (b)(2) of this section. Then, convert the emissions of each GHG to metric tons CO_2e per year using Equation A–1 of this section, and sum the emissions for all units at the facility.

(d) To calculate GHG quantities for comparison to the 25,000 metric ton CO_2 per year threshold for importers and exporters of coal-to-liquid products under paragraph (a)(4)(i) of this section, calculate the mass in metric tons per year of CO_2 that would result from the complete combustion or oxidation of the quantity of coal-to-liquid products that are imported during the reporting year and that are exported during the reporting year. Calculate the emissions using the methodology specified in subpart LL of this part.

(e) To calculate GHG quantities for comparison to the 25,000 metric ton CO_2e per year threshold for importers and exporters of petroleum products under paragraph (a)(4)(ii) of this section, calculate the mass in metric tons per year of CO_2 that would result from the complete combustion or oxidation of the volume of petroleum products and natural gas liquids that are imported during the reporting year and that are exported during the reporting year. Calculate the emissions using the methodology specified in subpart MM of this part.

(f) To calculate GHG quantities for comparison to the 25,000 metric ton CO_2e per year threshold under paragraph (a)(4) of this section for importers and exporters of industrial greenhouse gases and for importers and exporters of CO_2, the owner or operator shall calculate the mass in metric tons per year of CO_2e imports and exports as described in paragraphs (f)(1) through (f)(3) of this section.

(1) Calculate the mass in metric tons per year of CO_2, N_2O, and each fluorinated GHG that is imported and the mass in metric tons per year of CO_2, N_2O, and each fluorinated GHG that is exported during the year. Include only those gases listed in Table A–1 of this subpart.

(2) Convert the mass of each imported and each GHG exported from

paragraph (f)(1) of this section to metric tons of CO_2e using Equation A–1 of this section.

(3) Sum the total annual metric tons of CO_2e in paragraph (f)(2) of this section for all imported GHGs. Sum the total annual metric tons of CO_2e in paragraph (f)(2) of this section for all exported GHGs.

(g) If a capacity or generation reporting threshold in paragraph (a)(1) of this section applies, the owner or operator shall review the appropriate records and perform any necessary calculations to determine whether the threshold has been exceeded.

(h) An owner or operator of a facility or supplier that does not meet the applicability requirements of paragraph (a) of this section is not subject to this rule. Such owner or operator would become subject to the rule and reporting requirements §98.3(b)(3), if a facility or supplier exceeds the applicability requirements of paragraph (a) of this section at a later time. Thus, the owner or operator should reevaluate the applicability to this part (including the revising of any relevant emissions calculations or other calculations) whenever there is any change that could cause a facility or supplier to meet the applicability requirements of paragraph (a) of this section. Such changes include but are not limited to process modifications, increases in operating hours, increases in production, changes in fuel or raw material use, addition of equipment, and facility expansion.

(i) Except as provided in this paragraph, once a facility or supplier is subject to the requirements of this part, the owner or operator must continue for each year thereafter to comply with all requirements of this part, including the requirement to submit annual GHG reports, even if the facility or supplier does not meet the applicability requirements in paragraph (a) of this section in a future year.

(1) If reported emissions are less than 25,000 metric tons CO_2e per year for five consecutive years, then the owner or operator may discontinue complying with this part provided that the owner or operator submits a notification to the Administrator that announces the cessation of reporting and explains the reasons for the reduction in emissions. The notification shall be submitted no later than March 31 of the year immediately following the fifth consecutive year of emissions less than 25,000 tons CO_2e per year. The owner or operator must maintain the corresponding records required under §98.3(g) for each of the five consecutive years and retain such records for three years following the year that reporting was discontinued. The owner or operator must resume reporting if annual emissions in any future calendar year increase to 25,000 metric tons CO_2e per year or more.

(2) If reported emissions are less than 15,000 metric tons CO_2e per year for three consecutive years, then the owner or operator may discontinue complying with this part provided that the owner or operator submits a notification to the Administrator that announces the cessation of reporting and explains the reasons for the reduction in emissions. The notification shall be submitted no later than March 31 of the year immediately following the third consecutive year of emissions less than 15,000 tons CO_2e per year. The owner or operator must maintain the corresponding records required under §98.3(g) for each of the three consecutive years and retain such records for three years following the year that reporting was discontinued. The owner or operator must resume reporting if annual emissions in any future calendar year increase to 25,000 metric tons CO_2e per year or more.

(3) If the operations of a facility or supplier are changed such that all applicable GHG-emitting processes and operations listed in paragraphs (a)(1) through (a)(4) of this section cease to operate, then the owner or operator is exempt from reporting in the years following the year in which cessation of such operations occurs, provided that the owner or operator submits a notification to the Administrator that announces the cessation of reporting and certifies to the closure of all GHG-emitting processes and operations. This paragraph (i)(2) does not apply to seasonal or other temporary cessation of operations. This paragraph (i)(2) does not apply to facilities with municipal solid waste landfills. The owner or operator must resume reporting for

any future calendar year during which any of the GHG-emitting processes or operations resume operation.

(j) Table A–2 of this subpart provides a conversion table for some of the common units of measure used in part 98.

§ 98.3 What are the general monitoring, reporting, recordkeeping and verification requirements of this part?

The owner or operator of a facility or supplier that is subject to the requirements of this part must submit GHG reports to the Administrator, as specified in this section.

(a) *General*. Except as provided in paragraph (d) of this section, follow the procedures for emission calculation, monitoring, quality assurance, missing data, recordkeeping, and reporting that are specified in each relevant subpart of this part.

(b) *Schedule*. The annual GHG report must be submitted no later than March 31 of each calendar year for GHG emissions in the previous calendar year.

(1) For an existing facility or supplier that began operation before January 1, 2010, report emissions for calendar year 2010 and each subsequent calendar year.

(2) For a new facility or supplier that begins operation on or after January 1, 2010, report emissions beginning with the first operating month and ending on December 31 of that year. Each subsequent annual report must cover emissions for the calendar year, beginning on January 1 and ending on December 31.

(3) For any facility or supplier that becomes subject to this rule because of a physical or operational change that is made after January 1, 2010, report emissions for the first calendar year in which the change occurs, beginning with the first month of the change and ending on December 31 of that year. For a facility or supplier that becomes subject to this rule solely because of an increase in hours of operation or level of production, the first month of the change is the month in which the increased hours of operation or level of production, if maintained for the remainder of the year, would cause the facility or supplier to exceed the applicable threshold. Each subsequent annual report must cover emissions for the calendar year, beginning on January 1 and ending on December 31.

(c) *Content of the annual report*. Except as provided in paragraph (d) of this section, each annual GHG report shall contain the following information:

(1) Facility name or supplier name (as appropriate) and physical street address including the city, state, and zip code.

(2) Year and months covered by the report.

(3) Date of submittal.

(4) For facilities, report annual emissions of CO_2, CH_4, N_2O, and each fluorinated GHG (as defined in § 98.6) as follows:

(i) Annual emissions (excluding biogenic CO_2) aggregated for all GHG from all applicable source categories in subparts C through JJ of this part and expressed in metric tons of CO_2e calculated using Equation A–1 of this subpart.

(ii) Annual emissions of biogenic CO_2 aggregated for all applicable source categories in subparts C through JJ of this part.

(iii) Annual emissions from each applicable source category in subparts C through JJ of this part, expressed in metric tons of each GHG listed in paragraphs (c)(4)(iii)(A) through (c)(4)(iii)(E) of this section.

(A) Biogenic CO_2.

(B) CO_2 (excluding biogenic CO_2).

(C) CH_4.

(D) N_2O.

(E) Each fluorinated GHG (including those not listed in Table A–1 of this subpart).

(iv) Emissions and other data for individual units. processes, activities, and operations as specified in the ''Data reporting requirements'' section of each applicable subpart of this part.

(5) For suppliers, report annual quantities of CO_2, CH_4, N_2O, and each fluorinated GHG (as defined in § 98.6) that would be emitted from combustion or use of the products supplied, imported, and exported during the year. Calculate and report quantities at the following levels:

(i) Total quantity of GHG aggregated for all GHG from all applicable supply categories in subparts KK through PP

of this part and expressed in metric tons of CO_2e calculated using Equation A–1 of this subpart.

(ii) Quantity of each GHG from each applicable supply category in subparts KK through PP of this part, expressed in metric tons of each GHG. For fluorinated GHG, report emissions of all fluorinated GHG, including those not listed in Table A–1 of this subpart.

(iii) Any other data specified in the ''Data reporting requirements'' section of each applicable subpart of this part.

(6) A written explanation, as required under §98.3(e), if you change emission calculation methodologies during the reporting period.

(7) A brief description of each ''best available monitoring method'' used according to paragraph (d) of this section, the parameter measured using the method, and the time period during which the ''best available monitoring method'' was used.

(8) Each data element for which a missing data procedure was used according to the procedures of an applicable subpart and the total number of hours in the year that a missing data procedure was used for each data element.

(9) A signed and dated certification statement provided by the designated representative of the owner or operator, according to the requirements of §98.4(e)(1).

(d) *Special provisions for reporting year 2010* (1) *Best available monitoring methods*. During January 1, 2010 through March 31, 2010, owners or operators may use best available monitoring methods for any parameter (e.g., fuel use, daily carbon content of feedstock by process line) that cannot reasonably be measured according to the monitoring and QA/QC requirements of a relevant subpart. The owner or operator must use the calculation methodologies and equations in the ''Calculating GHG Emissions'' sections of each relevant subpart, but may use the best available monitoring method for any parameter for which it is not reasonably feasible to acquire, install, and operate a required piece of monitoring equipment by January 1, 2010. Starting no later than April 1, 2010, the owner or operator must discontinue using best available methods and begin following all applicable monitoring and QA/QC requirements of this part, except as provided in paragraphs (d)(2) and (d)(3) of this section. Best available monitoring methods means any of the following methods specified in this paragraph:

(i) Monitoring methods currently used by the facility that do not meet the specifications of an relevant subpart.

(ii) Supplier data.

(iii) Engineering calculations.

(iv) Other company records.

(2) *Requests for extension of the use of best available monitoring methods*. The owner or operator may submit a request to the Administrator to use one or more best available monitoring methods beyond March 31, 2010.

(i) *Timing of request*. The extension request must be submitted to EPA no later than 30 days after the effective date of the GHG reporting rule.

(ii) *Content of request*. Requests must contain the following information:

(A) A list of specific item of monitoring instrumentation for which the request is being made and the locations where each piece of monitoring instrumentation will be installed.

(B) Identification of the specific rule requirements (by rule subpart, section, and paragraph numbers) for which the instrumentation is needed.

(C) A description of the reasons why the needed equipment could not be obtained and installed before April 1, 2010.

(D) If the reason for the extension is that the equipment cannot be purchased and delivered by April 1, 2010, include supporting documentation such as the date the monitoring equipment was ordered, investigation of alternative suppliers and the dates by which alternative vendors promised delivery, backorder notices or unexpected delays, descriptions of actions taken to expedite delivery, and the current expected date of delivery.

(E) If the reason for the extension is that the equipment cannot be installed without a process unit shutdown, include supporting documentation demonstrating that it is not practicable to isolate the equipment and install the monitoring instrument without a full process unit shutdown. Include the

date of the most recent process unit shutdown, the frequency of shutdowns for this process unit, and the date of the next planned shutdown during which the monitoring equipment can be installed. If there has been a shutdown or if there is a planned process unit shutdown between promulgation of this part and April 1, 2010, include a justification of why the equipment could not be obtained and installed during that shutdown.

(F) A description of the specific actions the facility will take to obtain and install the equipment as soon as reasonably feasible and the expected date by which the equipment will be installed and operating.

(iii) *Approval criteria*. To obtain approval, the owner or operator must demonstrate to the Administrator's satisfaction that it is not reasonably feasible to acquire, install, and operate a required piece of monitoring equipment by April 1, 2010. The use of best available methods will not be approved beyond December 31, 2010.

(3) *Abbreviated emissions report for facilities containing only general stationary fuel combustion sources*. In lieu of the report required by paragraph (c) of this section, the owner or operator of an existing facility that is in operation on January 1, 2010 and that meets the conditions of § 98.2 (a)(3) may submit an abbreviated GHG report for the facility for GHGs emitted in 2010. The abbreviated report must be submitted by March 31, 2011. An owner or operator that submits an abbreviated report must submit a full GHG report according to the requirements of paragraph (c) of this section beginning in calendar year 2011. The abbreviated facility report must include the following information:

(i) Facility name and physical street address including the city, state and zip code.

(ii) The year and months covered by the report.

(iii) Date of submittal.

(iv) Total facility GHG emissions aggregated for all stationary fuel combustion units calculated according to any method specified in § 98.33(a) and expressed in metric tons of CO_2, CH_4, N_2O, and CO_2e.

(v) Any facility operating data or process information used for the GHG emission calculations.

(vi) A signed and dated certification statement provided by the designated representative of the owner or operator, according to the requirements of paragraph (e)(1) of this section.

(e) *Emission calculations*. In preparing the GHG report, you must use the calculation methodologies specified in the relevant subparts, except as specified in paragraph (d) of this section. For each source category, you must use the same calculation methodology throughout a reporting period unless you provide a written explanation of why a change in methodology was required.

(f) *Verification*. To verify the completeness and accuracy of reported GHG emissions, the Administrator may review the certification statements described in paragraphs (c)(8) and (d)(3)(vi) of this section and any other credible evidence, in conjunction with a comprehensive review of the GHG reports and periodic audits of selected reporting facilities. Nothing in this section prohibits the Administrator from using additional information to verify the completeness and accuracy of the reports.

(g) *Recordkeeping*. An owner or operator that is required to report GHGs under this part must keep records as specified in this paragraph. Retain all required records for at least 3 years. The records shall be kept in an electronic or hard-copy format (as appropriate) and recorded in a form that is suitable for expeditious inspection and review. Upon request by the Administrator, the records required under this section must be made available to EPA. Records may be retained off site if the records are readily available for expeditious inspection and review. For records that are electronically generated or maintained, the equipment or software necessary to read the records shall be made available, or, if requested by EPA, electronic records shall be converted to paper documents. You must retain the following records, in addition to those records prescribed in each applicable subpart of this part:

(1) A list of all units, operations, processes, and activities for which GHG emission were calculated.

(2) The data used to calculate the GHG emissions for each unit, operation, process, and activity, categorized by fuel or material type. These data include but are not limited to the following information in this paragraph (g)(2):

(i) The GHG emissions calculations and methods used.

(ii) Analytical results for the development of site-specific emissions factors.

(iii) The results of all required analyses for high heat value, carbon content, and other required fuel or feedstock parameters.

(iv) Any facility operating data or process information used for the GHG emission calculations.

(3) The annual GHG reports.

(4) Missing data computations. For each missing data event, also retain a record of the duration of the event, actions taken to restore malfunctioning monitoring equipment, the cause of the event, and the actions taken to prevent or minimize occurrence in the future.

(5) A written GHG Monitoring Plan.

(i) At a minimum, the GHG Monitoring Plan shall include the elements listed in this paragraph (g)(5)(i).

(A) Identification of positions of responsibility (i.e., job titles) for collection of the emissions data.

(B) Explanation of the processes and methods used to collect the necessary data for the GHG calculations.

(C) Description of the procedures and methods that are used for quality assurance, maintenance, and repair of all continuous monitoring systems, flow meters, and other instrumentation used to provide data for the GHGs reported under this part.

(ii) The GHG Monitoring Plan may rely on references to existing corporate documents (e.g., standard operating procedures, quality assurance programs under appendix F to 40 CFR part 60 or appendix B to 40 CFR part 75, and other documents) provided that the elements required by paragraph (g)(5)(i) of this section are easily recognizable.

(iii) The owner or operator shall revise the GHG Monitoring Plan as needed to reflect changes in production processes, monitoring instrumentation, and quality assurance procedures; or to improve procedures for the maintenance and repair of monitoring systems to reduce the frequency of monitoring equipment downtime.

(iv) Upon request by the Administrator, the owner or operator shall make all information that is collected in conformance with the GHG Monitoring Plan available for review during an audit. Electronic storage of the information in the plan is permissible, provided that the information can be made available in hard copy upon request during an audit.

(6) The results of all required certification and quality assurance tests of continuous monitoring systems, fuel flow meters, and other instrumentation used to provide data for the GHGs reported under this part.

(7) Maintenance records for all continuous monitoring systems, flow meters, and other instrumentation used to provide data for the GHGs reported under this part.

(h) *Annual GHG report revisions.* The owner or operator shall submit a revised report within 45 days of discovering or being notified by EPA of errors in an annual GHG report. The revised report must correct all identified errors. The owner or operator shall retain documentation for 3 years to support any revisions made to an annual GHG report.

(i) *Calibration accuracy requirements.* The owner or operator of a facility or supplier that is subject to the requirements of this part must meet the calibration accuracy requirements of this paragraph (i).

(1) Except as provided paragraphs (i)(4) through (i)(6) of this section, flow meters and other devices (e.g., belt scales) that measure data used to calculate GHG emissions shall be calibrated prior to April 1, 2010 using the procedures specified in this paragraph and each relevant subpart of this part. All measurement devices must be calibrated according to the manufacturer's recommended procedures, an appropriate industry consensus standard, or a method specified in a relevant subpart of this part. All measurement devices shall be calibrated to an accuracy

of 5 percent. For facilities and suppliers that become subject to this part after April 1, 2010, the initial calibration shall be conducted on the date that data collection is required to begin. Subsequent calibrations shall be performed at the frequency specified in each applicable subpart.

(2) For flow meters, perform all calibrations at measurement points that are representative of normal operation of the meter. Except for the orifice, nozzle, and venturi flow meters described in paragraph (i)(3) of this section, calculate the calibration error at each measurement point using Equation A–2 of this section. The terms ''R'' and ''A'' in Equation A–2 must be expressed in consistent units of measure (e.g., gallons/minute, ft^3/min). The calibration error at each measurement point shall not exceed 5.0 percent of the reference value.

$$CE = \frac{R - A}{R} \times 100 \qquad \text{(Eq. A-2)}$$

Where:

CE = Calibration error (%)
R = Reference value
A = Flow meter response to the reference value

(3) For orifice, nozzle, and venturi flow meters, the initial quality assurance consists of in-situ calibration of the differential pressure (delta-P), total pressure, and temperature transmitters. Calibrate each transmitter at a zero point and at least one upscale point. Fixed reference points, such as the freezing point of water, may be used for temperature transmitter calibrations. Calculate the calibration error of each transmitter at each measurement point, using Equation A–3 of this subpart. The terms ''R'', ''A'', and ''FS'' in Equation A–3 of this subpart must be in consistent units of measure (e.g., milliamperes, inches of water, psi, degrees). For each transmitter, the CE value at each measurement point shall not exceed 2.0 percent of full-scale. Alternatively, the results are acceptable if the sum of the calculated CE values for the three transmitters at each calibration level (i.e., at the zero level and at each upscale level) does not exceed 5.0 percent.

$$CE = \frac{R - A}{FS} \times 100 \qquad \text{(Eq. A-3)}$$

Where:

CE = Calibration error (%)
R = Reference value
A = Transmitter response to the reference value
FS = Full-scale value of the transmitter

(4) Fuel billing meters are exempted from the calibration requirements of this section, provided that the fuel supplier and any unit combusting the fuel do not have any common owners and are not owned by subsidiaries or affiliates of the same company.

(5) For a flow meter or other measurement device that has been previously calibrated in accordance with this part, an initial calibration is not required by the date specified in paragraph (i)(1) of this section if, as of the date required for the initial calibration, the previous calibration is still active (i.e., the device is not yet due for recalibration because the time interval between successive calibrations, as required by this part, has not elapsed).

(6) For units and processes that operate continuously with infrequent outages, it may not be possible to meet the April 1, 2010 deadline for the initial calibration of a flow meter or other measurement device without removing the device from service and shipping it to a remote location, thereby disrupting normal process operation. In such cases, the owner or operator may postpone the initial calibration until the next scheduled maintenance outage, and may similarly postpone the subsequent recalibrations. Such postponements shall be documented in the monitoring plan that is required under § 98.3(g)(5).

§ 98.4 Authorization and responsibilities of the designated representative.

(a) *General*. Except as provided under paragraph (f) of this section, each facility, and each supplier, that is subject to this part, shall have one and only one designated representative, who shall be responsible for certifying, signing, and submitting GHG emissions reports and any other submissions for such facility and supplier respectively

to the Administrator under this part. If the facility is required under any other part of title 40 of the Code of Federal Regulations to submit to the Administrator any other emission report that is subject to any requirement in 40 CFR part 75, the same individual shall be the designated representative responsible for certifying, signing, and submitting the GHG emissions reports and all such other emissions reports under this part.

(b) *Authorization of a designated representative*. The designated representative of the facility or supplier shall be an individual selected by an agreement binding on the owners and operators of such facility or supplier and shall act in accordance with the certification statement in paragraph (i)(4)(iv) of this section.

(c) *Responsibility of the designated representative*. Upon receipt by the Administrator of a complete certificate of representation under this section for a facility or supplier, the designated representative identified in such certificate of representation shall represent and, by his or her representations, actions, inactions, or submissions, legally bind each owner and operator of such facility or supplier in all matters pertaining to this part, notwithstanding any agreement between the designated representative and such owners and operators. The owners and operators shall be bound by any decision or order issued to the designated representative by the Administrator or a court.

(d) *Timing*. No GHG emissions report or other submissions under this part for a facility or supplier will be accepted until the Administrator has received a complete certificate of representation under this section for a designated representative of the facility or supplier. Such certificate of representation shall be submitted at least 60 days before the deadline for submission of the facility's or supplier's initial emission report under this part.

(e) *Certification of the GHG emissions report*. Each GHG emission report and any other submission under this part for a facility or supplier shall be certified, signed, and submitted by the designated representative or any alternate designated representative of the facility or supplier in accordance with this section and §3.10 of this chapter.

(1) Each such submission shall include the following certification statement signed by the designated representative or any alternate designated representative: ''I am authorized to make this submission on behalf of the owners and operators of the facility or supplier, as applicable, for which the submission is made. I certify under penalty of law that I have personally examined, and am familiar with, the statements and information submitted in this document and all its attachments. Based on my inquiry of those individuals with primary responsibility for obtaining the information, I certify that the statements and information are to the best of my knowledge and belief true, accurate, and complete. I am aware that there are significant penalties for submitting false statements and information or omitting required statements and information, including the possibility of fine or imprisonment.''

(2) The Administrator will accept a GHG emission report or other submission for a facility or supplier under this part only if the submission is certified, signed, and submitted in accordance with this section.

(f) *Alternate designated representative*. A certificate of representation under this section for a facility or supplier may designate one alternate designated representative, who shall be an individual selected by an agreement binding on the owners and operators, and may act on behalf of the designated representative, of such facility or supplier. The agreement by which the alternate designated representative is selected shall include a procedure for authorizing the alternate designated representative to act in lieu of the designated representative.

(1) Upon receipt by the Administrator of a complete certificate of representation under this section for a facility or supplier identifying an alternate designated representative.

(i) The alternate designated representative may act on behalf of the designated representative for such facility or supplier.

(ii) Any representation, action, inaction, or submission by the alternate

designated representative shall be deemed to be a representation, action, inaction, or submission by the designated representative.

(2) Except in this section, whenever the term ''designated representative'' is used in this part, the term shall be construed to include the designated representative or any alternate designated representative.

(g) *Changing a designated representative or alternate designated representative*. The designated representative or alternate designated representative identified in a complete certificate of representation under this section for a facility or supplier received by the Administrator may be changed at any time upon receipt by the Administrator of another later signed, complete certificate of representation under this section for the facility or supplier. Notwithstanding any such change, all representations, actions, inactions, and submissions by the previous designated representative or the previous alternate designated representative of the facility or supplier before the time and date when the Administrator receives such later signed certificate of representation shall be binding on the new designated representative and the owners and operators of the facility or supplier.

(h) *Changes in owners and operators*. In the event an owner or operator of the facility or supplier is not included in the list of owners and operators in the certificate of representation under this section for the facility or supplier, such owner or operator shall be deemed to be subject to and bound by the certificate of representation, the representations, actions, inactions, and submissions of the designated representative and any alternate designated representative of the facility or supplier, as if the owner or operator were included in such list. Within 90 days after any change in the owners and operators of the facility or supplier (including the addition of a new owner or operator), the designated representative or any alternate designated representative shall submit a certificate of representation that is complete under this section except that such list shall be amended to reflect the change. If the designated representative or alternate designated representative determines at any time that an owner or operator of the facility or supplier is not included in such list and such exclusion is not the result of a change in the owners and operators, the designated representative or any alternate designated representative shall submit, within 90 days of making such determination, a certificate of representation that is complete under this section except that such list shall be amended to include such owner or operator.

(i) *Certificate of representation*. A certificate of representation shall be complete if it includes the following elements in a format prescribed by the Administrator in accordance with this section:

(1) Identification of the facility or supplier for which the certificate of representation is submitted.

(2) The name, address, e-mail address (if any), telephone number, and facsimile transmission number (if any) of the designated representative and any alternate designated representative.

(3) A list of the owners and operators of the facility or supplier identified in paragraph (i)(1) of this section, provided that, if the list includes the operators of the facility or supplier and the owners with control of the facility or supplier, the failure to include any other owners shall not make the certificate of representation incomplete.

(4) The following certification statements by the designated representative and any alternate designated representative:

(i) ''I certify that I was selected as the designated representative or alternate designated representative, as applicable, by an agreement binding on the owners and operators of the facility or supplier, as applicable.''

(ii) ''I certify that I have all the necessary authority to carry out my duties and responsibilities under 40 CFR part 98 on behalf of the owners and operators of the facility or supplier, as applicable, and that each such owner and operator shall be fully bound by my representations, actions, inactions, or submissions.''

(iii) ''I certify that the owners and operators of the facility or supplier, as applicable, shall be bound by any order

issued to me by the Administrator or a court regarding the facility or supplier.''

(iv) ''If there are multiple owners and operators of the facility or supplier, as applicable, I certify that I have given a written notice of my selection as the 'designated representative' or 'alternate designated representative', as applicable, and of the agreement by which I was selected to each owner and operator of the facility or supplier.''

(5) The signature of the designated representative and any alternate designated representative and the dates signed.

(j) *Documents of agreement*. Unless otherwise required by the Administrator, documents of agreement referred to in the certificate of representation shall not be submitted to the Administrator. The Administrator shall not be under any obligation to review or evaluate the sufficiency of such documents, if submitted.

(k) *Binding nature of the certificate of representation*. Once a complete certificate of representation under this section for a facility or supplier has been received, the Administrator will rely on the certificate of representation unless and until a later signed, complete certificate of representation under this section for the facility or supplier is received by the Administrator.

(l) *Objections concerning a designated representative*. (1) Except as provided in paragraph (g) of this section, no objection or other communication submitted to the Administrator concerning the authorization, or any representation, action, inaction, or submission, of the designated representative or alternate designated representative shall affect any representation, action, inaction, or submission of the designated representative or alternate designated representative, or the finality of any decision or order by the Administrator under this part.

(2) The Administrator will not adjudicate any private legal dispute concerning the authorization or any representation, action, inaction, or submission of any designated representative or alternate designated representative.

(m) *Delegation by designated representative and alternate designated representative*. (1) A designated representative or an alternate designated representative may delegate his or her own authority, to one or more individuals, to submit an electronic submission to the Administrator provided for or required under this part, except for a submission under this paragraph.

(2) In order to delegate his or her own authority, to one or more individuals, to submit an electronic submission to the Administrator in accordance with paragraph (m)(1) of this section, the designated representative or alternate designated representative must submit electronically to the Administrator a notice of delegation, in a format prescribed by the Administrator, that includes the following elements:

(i) The name, address, e-mail address (if any), telephone number, and facsimile transmission number (if any) of such designated representative or alternate designated representative.

(ii) The name, address, e-mail address, telephone number, and facsimile transmission number (if any) of each such individual (referred to as an ''agent'').

(iii) For each such individual, a list of the type or types of electronic submissions under paragraph (m)(1) of this section for which authority is delegated to him or her.

(iv) For each type of electronic submission listed in accordance with paragraph (m)(2)(iii) of this section, the facility or supplier for which the electronic submission may be made.

(v) The following certification statements by such designated representative or alternate designated representative:

(A) ''I agree that any electronic submission to the Administrator that is by an agent identified in this notice of delegation and of a type listed, and for a facility or supplier designated, for such agent in this notice of delegation and that is made when I am a designated representative or alternate designated representative, as applicable, and before this notice of delegation is superseded by another notice of delegation under §98.4(m)(3) shall be deemed to be an electronic submission certified, signed, and submitted by me.''

(B) ''Until this notice of delegation is superseded by a later signed notice of delegation under § 98.4(m)(3), I agree to maintain an e-mail account and to notify the Administrator immediately of any change in my e-mail address unless all delegation of authority by me under § 98.4(m) is terminated.''

(vi) The signature of such designated representative or alternate designated representative and the date signed.

(3) A notice of delegation submitted in accordance with paragraph (m)(2) of this section shall be effective, with regard to the designated representative or alternate designated representative identified in such notice, upon receipt of such notice by the Administrator and until receipt by the Administrator of another such notice that was signed later by such designated representative or alternate designated representative, as applicable. The later signed notice of delegation may replace any previously identified agent, add a new agent, or eliminate entirely any delegation of authority.

(4) Any electronic submission covered by the certification in paragraph (m)(2)(iv)(A) of this section and made in accordance with a notice of delegation effective under paragraph (m)(3) of this section shall be deemed to be an electronic submission certified, signed, and submitted by the designated representative or alternate designated representative submitting such notice of delegation.

§ 98.5 How is the report submitted?

Each GHG report and certificate of representation for a facility or supplier must be submitted electronically in accordance with the requirements of § 98.4 and in a format specified by the Administrator.

§ 98.6 Definitions.

All terms used in this part shall have the same meaning given in the Clean Air Act and in this section.

Accuracy of a measurement at a specified level (e.g., one percent of full scale or one percent of the value measured) means that the mean of repeat measurements made by a device or technique are within 95 percent of the range bounded by the true value plus or minus the specified level.

Acid Rain Program means the program established under title IV of the Clean Air Act, and implemented under parts 72 through 78 of this chapter for the reduction of sulfur dioxide and nitrogen oxides emissions.

Administrator means the Administrator of the United States Environmental Protection Agency or the Administrator's authorized representative.

AGA means the American Gas Association

Alkali bypass means a duct between the feed end of the kiln and the preheater tower through which a portion of the kiln exit gas stream is withdrawn and quickly cooled by air or water to avoid excessive buildup of alkali, chloride and/or sulfur on the raw feed. This may also be referred to as the ''kiln exhaust gas bypass.''

Anaerobic digester means the system where wastes are collected and anaerobically digested in large containment vessels or covered lagoons. Anaerobic digesters stabilize waste by the microbial reduction of complex organic compounds to CO2 and CH4, which is captured and may be flared or used as fuel. Anaerobic digestion systems, include but are not limited to covered lagoon, complete mix, plug flow, and fixed film digesters.

Anaerobic lagoon means a type of liquid storage system component, either at manure management system or a wastewater treatment system, that is designed and operated to stabilize wastes using anaerobic microbial processes. Anaerobic lagoons may be designed for combined stabilization and storage with varying lengths of retention time (up to a year or greater), depending on the climate region, the volatile solids loading rate, and other operational factors.

Anode effect is a process upset condition of an aluminum electrolysis cell caused by too little alumina dissolved in the electrolyte. The anode effect begins when the voltage rises rapidly and exceeds a threshold voltage, typically 8 volts.

Anode Effect Minutes per Cell Day (24 hours) are the total minutes during which an electrolysis cell voltage is above the threshold voltage, typically 8 volts.

ANSI means the American National Standards Institute.

API means the American Petroleum Institute.

Argon-oxygen decarburization (AOD) vessel means any closed-bottom, refractory-lined converter vessel with submerged tuyeres through which gaseous mixtures containing argon and oxygen or nitrogen may be blown into molten steel for further refining to reduce the carbon content of the steel.

ASABE means the American Society of Agricultural and Biological Engineers.

ASME means the American Society of Mechanical Engineers.

ASTM means the American Society of Testing and Materials.

Asphalt means a dark brown-to-black cement-like material obtained by petroleum processing and containing bitumens as the predominant component. It includes crude asphalt as well as the following finished products: cements, fluxes, the asphalt content of emulsions (exclusive of water), and petroleum distillates blended with asphalt to make cutback asphalts.

Aviation Gasoline means a complex mixture of volatile hydrocarbons, with or without additives, suitably blended to be used in aviation reciprocating engines. Specifications can be found in ASTM Specification D910–07a, Standard Specification for Aviation Gasolines (incorporated by reference, see §98.7).

B_0 means the maximum CH_4 producing capacity of a waste stream, kg CH_4/kg COD.

Basic oxygen furnace means any refractory-lined vessel in which high-purity oxygen is blown under pressure through a bath of molten iron, scrap metal, and fluxes to produce steel.

bbl means barrel.

Biodiesel means a mono-akyl ester derived from biomass and conforming to ASTM D6751–08, Standard Specification for Biodiesel Fuel Blend Stock (B100) for Middle Distillate Fuels.

Biogenic CO_2 means carbon dioxide emissions generated as the result of biomass combustion from combustion units for which emission calculations are required by an applicable part 98 subpart.

Biomass means non-fossilized and biodegradable organic material originating from plants, animals or microorganisms, including products, by-products, residues and waste from agriculture, forestry and related industries as well as the non-fossilized and biodegradable organic fractions of industrial and municipal wastes, including gases and liquids recovered from the decomposition of non-fossilized and biodegradable organic material.

Blast furnace means a furnace that is located at an integrated iron and steel plant and is used for the production of molten iron from iron ore pellets and other iron bearing materials.

Blendstocks are petroleum products used for blending or compounding into finished motor gasoline. These include RBOB (reformulated blendstock for oxygenate blending) and CBOB (conventional blendstock for oxygenate blending), but exclude oxygenates, butane, and pentanes plus.

Blendstocks—Others are products used for blending or compounding into finished motor gasoline that are not defined elsewhere. Excludes Gasoline Treated as Blendstock (GTAB), Diesel Treated as Blendstock (DTAB), conventional blendstock for oxygenate blending (CBOB), reformulated blendstock for oxygenate blending (RBOB), oxygenates (e.g. fuel ethanol and methyl tertiary butyl ether), butane, and pentanes plus.

Blowdown mean the act of emptying or depressuring a vessel. This may also refer to the discarded material such as blowdown water from a boiler or cooling tower.

British Thermal Unit or Btu means the quantity of heat required to raise the temperature of one pound of water by one degree Fahrenheit at about 39.2 degrees Fahrenheit.

Bulk, with respect to industrial GHG suppliers and CO2 suppliers, means the transfer of a product inside containers, including but not limited to tanks, cylinders, drums, and pressure vessels.

Bulk natural gas liquid or NGL refers to mixtures of hydrocarbons that have been separated from natural gas as liquids through the process of absorption, condensation, adsorption, or other methods at lease separators and field facilities. Generally, such liquids consist of ethane, propane, butanes, and pentanes plus. Bulk NGL is sold to

fractionators or to refineries and petrochemical plants where the fractionation takes place.

Butane, or n-Butane, is a paraffinic straight-chain hydrocarbon with molecular formula C_4H_{10}.

Butylene, or n-Butylene, is an olefinic straight-chain hydrocarbon with molecular formula C_4H_8.

By-product coke oven battery means a group of ovens connected by common walls, where coal undergoes destructive distillation under positive pressure to produce coke and coke oven gas from which by-products are recovered.

Calcination means the process of thermally treating minerals to decompose carbonates from ore.

Calculation methodology means a methodology prescribed under the section ''Calculating GHG Emissions'' in any subpart of part 98.

Carbon dioxide equivalent or CO_2e means the number of metric tons of CO_2 emissions with the same global warming potential as one metric ton of another greenhouse gas, and is calculated using Equation A–1 of this subpart.

Carbon dioxide production well means any hole drilled in the earth for the primary purpose of extracting carbon dioxide from a geologic formation or group of formations which contain deposits of carbon dioxide.

Carbon dioxide production well facility means one or more carbon dioxide production wells that are located on one or more contiguous or adjacent properties, which are under the control of the same entity. Carbon dioxide production wells located on different oil and gas leases, mineral fee tracts, lease tracts, subsurface or surface unit areas, surface fee tracts, surface lease tracts, or separate surface sites, whether or not connected by a road, waterway, power line, or pipeline, shall be considered part of the same CO_2 production well facility if they otherwise meet the definition.

Carbon dioxide stream means carbon dioxide that has been captured from an emission source (e.g. a power plant or other industrial facility) or extracted from a carbon dioxide production well plus incidental associated substances either derived from the source materials and the capture process or extracted with the carbon dioxide.

Carbon share means the percent of total mass that carbon represents in any product.

Carbonate means compounds containing the radical CO_3^{-2}. Upon calcination, the carbonate radical decomposes to evolve carbon dioxide (CO_2). Common carbonates consumed in the mineral industry include calcium carbonate ($CaCO_3$) or calcite; magnesium carbonate ($MgCO_3$) or magnesite; and calcium-magnesium carbonate ($CaMg(CO_3)_2$) or dolomite.

Carbonate-based mineral means any of the following minerals used in the manufacture of glass: Calcium carbonate ($CaCO_3$), calcium magnesium carbonate ($CaMg(CO_3)_2$), and sodium carbonate (Na_2CO_3).

Carbonate-based mineral mass fraction means the following: For limestone, the mass fraction of $CaCO_3$ in the limestone; for dolomite, the mass fraction of $CaMg(CO_3)_2$ in the dolomite; and for soda ash, the mass fraction of Na_2CO_3 in the soda ash.

Carbonate-based raw material means any of the following materials used in the manufacture of glass: Limestone, dolomite, and soda ash.

Catalytic cracking unit means a refinery process unit in which petroleum derivatives are continuously charged and hydrocarbon molecules in the presence of a catalyst are fractured into smaller molecules, or react with a contact material suspended in a fluidized bed to improve feedstock quality for additional processing and the catalyst or contact material is continuously regenerated by burning off coke and other deposits. Catalytic cracking units include both fluidized bed systems, which are referred to as fluid catalytic cracking units (FCCU), and moving bed systems, which are also referred to as thermal catalytic cracking units. The unit includes the riser, reactor, regenerator, air blowers, spent catalyst or contact material stripper, catalyst or contact material recovery equipment, and regenerator equipment for controlling air pollutant emissions and for heat recovery.

Deep bedding systems for cattle swine means a manure management system

in which, as manure accumulates, bedding is continually added to absorb moisture over a production cycle and possibly for as long as 6 to 12 months. This manure management system also is known as a bedded pack manure management system and may be combined with a dry lot or pasture.

CBOB-Summer (conventional blendstock for oxygenate blending) means a petroleum product which, when blended with a specified type and percentage of oxygenate, meets the definition of Conventional-Summer.

CBOB-Winter (conventional blendstock for oxygenate blending) means a petroleum product which, when blended with a specified type and percentage of oxygenate, meets the definition of Conventional-Winter.

Certified standards means calibration gases certified by the manufacturer of the calibration gases to be accurate to within 2 percent of the value on the label or calibration gases.

CH_4 means methane.

Chemical recovery combustion unit means a combustion device, such as a recovery furnace or fluidized-bed reactor where spent pulping liquor from sulfite or semi-chemical pulping processes is burned to recover pulping chemicals.

Chemical recovery furnace means an enclosed combustion device where concentrated spent liquor produced by the kraft or soda pulping process is burned to recover pulping chemicals and produce steam. Includes any recovery furnace that burns spent pulping liquor produced from both the kraft and soda pulping processes.

Chloride process means a production process where titanium dioxide is produced using calcined petroleum coke and chlorine as raw materials.

City gate means a location at which natural gas ownership or control passes from one party to another, neither of which is the ultimate consumer. In this rule, in keeping with common practice, the term refers to a point or measuring station at which a local gas distribution utility receives gas from a natural gas pipeline company or transmission system. Meters at the city gate station measure the flow of natural gas into the local distribution company system and typically are used to measure local distribution company system sendout to customers.

CO_2 means carbon dioxide.

Coal means all solid fuels classified as anthracite, bituminous, sub-bituminous, or lignite by the American Society for Testing and Materials Designation ASTM D388–05 Standard Classification of Coals by Rank (incorporated by reference, *see* §98.7).

COD means the chemical oxygen demand as determined using methods specified pursuant to 40 CFR part 136.

Coke burn-off means the coke removed from the surface of a catalyst by combustion during catalyst regeneration. Coke burn-off also means the coke combusted in fluid coking unit burner.

Cokemaking means the production of coke from coal in either a by-product coke oven battery or a non-recovery coke oven battery.

Commercial applications means executing a commercial transaction subject to a contract. A commercial application includes transferring custody of a product from one facility to another if it otherwise meets the definition.

Company records means, in reference to the amount of fuel consumed by a stationary combustion unit (or by a group of such units), a complete record of the methods used, the measurements made, and the calculations performed to quantify fuel usage. Company records may include, but are not limited to, direct measurements of fuel consumption by gravimetric or volumetric means, tank drop measurements, and calculated values of fuel usage obtained by measuring auxiliary parameters such as steam generation or unit operating hours. Fuel billing records obtained from the fuel supplier qualify as company records.

Connector means to flanged, screwed, or other joined fittings used to connect pipe line segments, tubing, pipe components (such as elbows, reducers, ''T's'' or valves) or a pipe line and a piece of equipment or an instrument to a pipe, tube or piece of equipment. A common connector is a flange. Joined fittings welded completely around the circumference of the interface are not considered connectors for the purpose of this part.

Container glass means glass made of soda-lime recipe, clear or colored, which is pressed and/or blown into bottles, jars, ampoules, and other products listed in North American Industry Classification System 327213 (NAICS 327213).

Continuous emission monitoring system or CEMS means the total equipment required to sample, analyze, measure, and provide, by means of readings recorded at least once every 15 minutes, a permanent record of gas concentrations, pollutant emission rates, or gas volumetric flow rates from stationary sources.

Continuous glass melting furnace means a glass melting furnace that operates continuously except during periods of maintenance, malfunction, control device installation, reconstruction, or rebuilding.

Conventional-Summer refers to finished gasoline formulated for use in motor vehicles, the composition and properties of which do not meet the requirements of the reformulated gasoline regulations promulgated by the U.S. Environmental Protection Agency under 40 CFR 80.40, but which meet summer RVP standards required under 40 CFR 80.27 or as specified by the state. NOTE: This category excludes conventional gasoline for oxygenate blending (CBOB) as well as other blendstock.

Conventional-Winter refers to finished gasoline formulated for use in motor vehicles, the composition and properties of which do not meet the requirements of the reformulated gasoline regulations promulgated by the U.S. Environmental Protection Agency under 40 CFR 80.40 or the summer RVP standards required under 40 CFR 80.27 or as specified by the state. NOTE: This category excludes conventional blendstock for oxygenate blending (CBOB) as well as other blendstock.

Crude oil means a mixture of hydrocarbons that exists in the liquid phase in the underground reservoir and remains liquid at atmospheric pressure after passing through surface separating facilities.

Daily spread means a manure management system component in which manure is routinely removed from a confinement facility and is applied to cropland or pasture within 24 hours of excretion.

Day means any consistently designated 24 hour period during which an emission unit is operated.

Degradable organic carbon (DOC) means the fraction of the total mass of a waste material that can be biologically degraded.

Delayed coking unit means one or more refinery process units in which high molecular weight petroleum derivatives are thermally cracked and petroleum coke is produced in a series of closed, batch system reactors. A *delayed coking unit* consists of the coke drums and ancillary equipment associated with a single fractionator.

Density means the mass contained in a given unit volume (mass/volume).

Destruction means:

(1) With respect to landfills and manure management, the combustion of methane in any on-site or off-site combustion technology. Destroyed methane includes, but is not limited to, methane combusted by flaring, methane destroyed by thermal oxidation, methane combusted for use in on-site energy or heat production technologies, methane that is conveyed through pipelines (including natural gas pipelines) for off-site combustion, and methane that is collected for any other on-site or off-site use as a fuel.

(2) With respect to fluorinated GHGs, the expiration of a fluorinated GHG to the destruction efficiency actually achieved. Such destruction does not result in a commercially useful end product.

Destruction efficiency means the efficiency with which a destruction device reduces the GWP-weighted mass of greenhouse gases fed into the device, considering the GWP-weighted masses of both the greenhouse gases fed into the device and those exhausted from the device. Destruction efficiency, or flaring destruction efficiency, refers to the fraction of the gas that leaves the flare partially or fully oxidized. The Destruction Efficiency is expressed in Equation A–2 of this section:

$$DE = 1 - \frac{tCO_2e_{OUT}}{tCO_2e_{IN}} \qquad \text{(Eq. A-2)}$$

Where:

DE = Destruction Efficiency
tCO_2e_{IN} = The GWP-weighted mass of GHGs fed into the destruction device
tCO_2e_{OUT} = The GWP-weighted mass of GHGs exhausted from the destruction device, including GHGs formed during the destruction process

Diesel—Other is any distillate fuel oil not defined elsewhere, including Diesel Treated as Blendstock (DTAB).

DIPE (diisopropyl ether, $(CH_3)_2CHOCH(CH_3)_2$) is an ether as described in ''Oxygenates.''

Direct liquefaction means the conversion of coal directly into liquids, rather than passing through an intermediate gaseous state.

Direct reduction furnace means a high temperature furnace typically fired with natural gas to produce solid iron from iron ore or iron ore pellets and coke, coal, or other carbonaceous materials.

Distillate Fuel Oil means a classification for one of the petroleum fractions produced in conventional distillation operations and from crackers and hydrotreating process units. The generic term distillate fuel oil includes kerosene, diesel fuels (Diesel Fuels No. 1, No. 2, and No. 4), and fuel oils (Fuel Oils No. 1, No. 2, and No. 4).

Distillate Fuel No. 1 has a maximum distillation temperature of 550 °F at the 90 percent recovery point and a minimum flash point of 100 °F and includes fuels commonly known as Diesel Fuel No. 1 and Fuel Oil No. 1, but excludes kerosene. This fuel is further subdivided into categories of sulfur content: High Sulfur (greater than 500 ppm), Low Sulfur (less than or equal to 500 ppm and greater than 15 ppm), and Ultra Low Sulfur (less than or equal to 15 ppm).

Distillate Fuel No. 2 has a minimum and maximum distillation temperature of 540 °F and 640 °F at the 90 percent recovery point, respectively, and includes fuels commonly known as Diesel Fuel No. 2 and Fuel Oil No. 2. This fuel is further subdivided into categories of sulfur content: High Sulfur (greater than 500 ppm), Low Sulfur (less than or equal to 500 ppm and greater than 15 ppm), and Ultra Low Sulfur (less than or equal to 15 ppm).

Distillate Fuel No. 4 is a distillate fuel oil made by blending distillate fuel oil and residual fuel oil, with a minimum flash point of 131 °F.

DOC_f means the fraction of DOC that actually decomposes under the (presumably anaerobic) conditions within the landfill.

Dry lot means a manure management system component consisting of a paved or unpaved open confinement area without any significant vegetative cover where accumulating manure may be removed periodically.

Electric arc furnace (EAF) means a furnace that produces molten alloy metal and heats the charge materials with electric arcs from carbon electrodes.

Electric arc furnace steelmaking means the production of carbon, alloy, or specialty steels using an EAF. This definition excludes EAFs at steel foundries and EAFs used to produce nonferrous metals.

Electrothermic furnace means a furnace that heats the charged materials with electric arcs from carbon electrodes.

Emergency generator means a stationary combustion device, such as a reciprocating internal combustion engine or turbine that serves solely as a secondary source of mechanical or electrical power whenever the primary energy supply is disrupted or discontinued during power outages or natural disasters that are beyond the control of the owner or operator of a facility. An emergency generator operates only during emergency situations, for training of personnel under simulated emergency conditions, as part of emergency demand response procedures, or for standard performance testing procedures as required by law or by the generator manufacturer. A generator that serves as a back-up power source under conditions of load shedding, peak shaving, power interruptions pursuant to an interruptible power service agreement, or scheduled facility maintenance shall not be considered an emergency generator.

Emergency equipment means any auxiliary fossil fuel-powered equipment, such as a fire pump, that is used only in emergency situations.

ETBE (ethyl tertiary butyl ether, $(CH_3)_3COC_2H$) is an ether as described in ''Oxygenates.''

Ethane is a paraffinic hydrocarbon with molecular formula C_2H_6.

Ethanol is an anhydrous alcohol with molecular formula C_2H_5OH.

Ethylene is an olefinic hydrocarbon with molecular formula C_2H_4.

Ex refinery gate means the point at which a petroleum product leaves the refinery.

Experimental furnace means a glass melting furnace with the sole purpose of operating to evaluate glass melting processes, technologies, or glass products. An experimental furnace does not produce glass that is sold (except for further research and development purposes) or that is used as a raw material for non-experimental furnaces.

Export means to transport a product from inside the United States to persons outside the United States, excluding any such transport on behalf of the United States military including foreign military sales under the Arms Export Control Act.

Exporter means any person, company or organization of record that transfers for sale or for other benefit, domestic products from the United States to another country or to an affiliate in another country, excluding any such transfers on behalf of the United States military or military purposes including foreign military sales under the Arms Export Control Act. An exporter is not the entity merely transporting the domestic products, rather an exporter is the entity deriving the principal benefit from the transaction.

Facility means any physical property, plant, building, structure, source, or stationary equipment located on one or more contiguous or adjacent properties in actual physical contact or separated solely by a public roadway or other public right-of-way and under common ownership or common control, that emits or may emit any greenhouse gas. Operators of military installations may classify such installations as more than a single facility based on distinct and independent functional groupings within contiguous military properties.

Feed means the prepared and mixed materials, which include but are not limited to materials such as limestone, clay, shale, sand, iron ore, mill scale, cement kiln dust and flyash, that are fed to the kiln. Feed does not include the fuels used in the kiln to produce heat to form the clinker product.

Feedstock means raw material inputs to a process that are transformed by reaction, oxidation, or other chemical or physical methods into products and by-products. Supplemental fuel burned to provide heat or thermal energy is not a feedstock.

Fischer-Tropsch process means a catalyzed chemical reaction in which synthesis gas, a mixture of carbon monoxide and hydrogen, is converted into liquid hydrocarbons of various forms.

Flare means a combustion device, whether at ground level or elevated, that uses an open flame to burn combustible gases with combustion air provided by uncontrolled ambient air around the flame.

Flat glass means glass made of soda-lime recipe and produced into continuous flat sheets and other products listed in NAICS 327211.

Flowmeter means a device that measures the mass or volumetric rate of flow of a gas, liquid, or solid moving through an open or closed conduit (e.g. flowmeters include, but are not limited to, rotameters, turbine meters, coriolis meters, orifice meters, ultra-sonic flowmeters, and vortex flowmeters).

Fluid coking unit means one or more refinery process units in which high molecular weight petroleum derivatives are thermally cracked and petroleum coke is continuously produced in a fluidized bed system. The fluid coking unit includes equipment for controlling air pollutant emissions and for heat recovery on the fluid coking burner exhaust vent. There are two basic types of fluid coking units: A traditional fluid coking unit in which only a small portion of the coke produced in the unit is burned to fuel the unit and the fluid coking burner exhaust vent is directed to the atmosphere (after processing in a CO boiler or other air pollutant control equipment) and a flexicoking unit in which an auxiliary burner is used to partially combust a significant portion of the produced petroleum coke to generate a low value fuel gas that is used as fuel in other combustion sources at the refinery.

Fluorinated greenhouse gas means sulfur hexafluoride (SF_6), nitrogen trifluoride (NF_3), and any fluorocarbon

except for controlled substances as defined at 40 CFR part 82, subpart A and substances with vapor pressures of less than 1 mm of Hg absolute at 25 degrees C. With these exceptions, ''fluorinated GHG'' includes but is not limited to any hydrofluorocarbon, any perfluorocarbon, any fully fluorinated linear, branched or cyclic alkane, ether, tertiary amine or aminoether, any perfluoropolyether, and any hydrofluoropolyether.

Fossil fuel means natural gas, petroleum, coal, or any form of solid, liquid, or gaseous fuel derived from such material, including for example, consumer products that are derived from such materials and are combusted.

Fossil fuel-fired means powered by combustion of fossil fuel, alone or in combination with any other fuel, regardless of the percentage of fossil fuel consumed.

Fractionators means plants that produce fractionated natural gas liquids (NGLs) extracted from produced natural gas and separate the NGLs individual component products: ethane, propane, butanes and pentane-plus (C5+). Plants that only process natural gas but do not fractionate NGLs further into component products are not considered fractionators. Some fractionators do not process production gas, but instead fractionate bulk NGLs received from natural gas processors. Some fractionators both process natural gas and fractionate bulk NGLs received from other plants.

Fuel means solid, liquid or gaseous combustible material.

Fuel gas means gas generated at a petroleum refinery, petrochemical plant, or similar industrial process unit, and that is combusted separately or in any combination with any type of gas.

Fuel gas system means a system of compressors, piping, knock-out pots, mix drums, and, if necessary, units used to remove sulfur contaminants from the fuel gas (e.g., amine scrubbers) that collects fuel gas from one or more sources for treatment, as necessary, and transport to a stationary combustion unit. A fuel gas system may have an overpressure vent to a flare but the primary purpose for a fuel gas system is to provide fuel to the various combustion units at the refinery or petrochemical plant.

Gas collection system or landfill gas collection system means a system of pipes used to collect landfill gas from different locations in the landfill to a single location for treatment (thermal destruction) or use. Landfill gas collection systems may also include knock-out or separator drums and/or a compressor.

Gas-fired unit means a stationary combustion unit that derives more than 50 percent of its annual heat input from the combustion of gaseous fuels, and the remainder of its annual heat input from the combustion of fuel oil or other liquid fuels.

Gas monitor means an instrument that continuously measures the concentration of a particular gaseous species in the effluent of a stationary source.

Gaseous fuel means a material that is in the gaseous state at standard atmospheric temperature and pressure conditions and that is combusted to produce heat and/or energy.

Gasification means the conversion of a solid or liquid raw material into a gas.

Gasoline—Other is any gasoline that is not defined elsewhere, including GTAB (gasoline treated as blendstock).

Glass melting furnace means a unit comprising a refractory-lined vessel in which raw materials are charged and melted at high temperature to produce molten glass.

Glass produced means the weight of glass exiting a glass melting furnace.

Global warming potential or GWP means the ratio of the time-integrated radiative forcing from the instantaneous release of one kilogram of a trace substance relative to that of one kilogram- of a reference gas, i.e., CO_2.

GPA means the Gas Processors Association.

Greenhouse gas or GHG means carbon dioxide (CO_2), methane (CH_4), nitrous oxide (N_2O), sulfur hexafluoride (SF6), hydrofluorocarbons (HFCs), perfluorocarbons (PFCs), and other fluorinated greenhouse gases as defined in this section.

GTBA (gasoline-grade tertiary butyl alcohol, $(CH_3)_3COH$), or t-butanol, is an alcohol as described in ''Oxygenates.''

Heavy Gas Oils are petroleum distillates with an approximate boiling range from 651 °F to 1,000 °F.

Heel means the amount of gas that remains in a shipping container after it is discharged or off-loaded (that is no more than ten percent of the volume of the container).

High heat value or HHV means the high or gross heat content of the fuel with the heat of vaporization included. The water is assumed to be in a liquid state.

Hydrofluorocarbons or HFCs means a class of GHGs consisting of hydrogen, fluorine, and carbon.

Import means, to land on, bring into, or introduce into, any place subject to the jurisdiction of the United States whether or not such landing, bringing, or introduction constitutes an importation within the meaning of the customs laws of the United States, with the following exemptions:

(1) Off-loading used or excess fluorinated GHGs or nitrous oxide of U.S. origin from a ship during servicing.

(2) Bringing fluorinated GHGs or nitrous oxide into the U.S. from Mexico where the fluorinated GHGs or nitrous oxide had been admitted into Mexico in bond and were of U.S. origin.

(3) Bringing fluorinated GHGs or nitrous oxide into the U.S. when transported in a consignment of personal or household effects or in a similar noncommercial situation normally exempted from U.S. Customs attention.

(4) Bringing fluorinated GHGs or nitrous into U.S. jurisdiction exclusively for U. S. military purposes.

Importer means any person, company, or organization of record that for any reason brings a product into the United States from a foreign country, excluding introduction into U.S. jurisdiction exclusively for United States military purposes. An importer is the person, company, or organization primarily liable for the payment of any duties on the merchandise or an authorized agent acting on their behalf. The term includes, as appropriate:

(1) The consignee.

(2) The importer of record.

(3) The actual owner.

(4) The transferee, if the right to draw merchandise in a bonded warehouse has been transferred.

Indurating furnace means a furnace where unfired taconite pellets, called green balls, are hardened at high temperatures to produce fired pellets for use in a blast furnace. Types of indurating furnaces include straight gate and grate kiln furnaces.

Industrial greenhouse gases means nitrous oxide or any fluorinated greenhouse gas.

In-line kiln/raw mill means a system in a portland cement production process where a dry kiln system is integrated with the raw mill so that all or a portion of the kiln exhaust gases are used to perform the drying operation of the raw mill, with no auxiliary heat source used. In this system the kiln is capable of operating without the raw mill operating, but the raw mill cannot operate without the kiln gases, and consequently, the raw mill does not generate a separate exhaust gas stream.

Isobutane is a paraffinic branch chain hydrocarbon with molecular formula C_4H_{10}.

Isobutylene is an olefinic branch chain hydrocarbon with molecular formula C_4H_8.

Kerosene is a light petroleum distillate with a maximum distillation temperature of 400 °F at the 10-percent recovery point, a final maximum boiling point of 572 °F, a minimum flash point of 100 °F, and a maximum freezing point of −22 °F. Included are No. 1–K and No. 2–K, distinguished by maximum sulfur content (0.04 and 0.30 percent of total mass, respectively), as well as all other grades of kerosene called range or stove oil. Excluded is kerosene-type jet fuel (see definition herein).

Kerosene-type jet fuel means a kerosene-based product used in commercial and military turbojet and turboprop aircraft. The product has a maximum distillation temperature of 400 °F at the 10 percent recovery point and a final maximum boiling point of 572 °F. Included are Jet A, Jet A–1, JP–5, and JP–8.

Kiln means an oven, furnace, or heated enclosure used for thermally processing a mineral or mineral-based substance.

Landfill means an area of land or an excavation in which wastes are placed for permanent disposal and that is not a land application unit, surface impoundment, injection well, or waste pile as those terms are defined under 40 CFR 257.2.

Landfill gas means gas produced as a result of anaerobic decomposition of waste materials in the landfill. Landfill gas generally contains 40 to 60 percent methane on a dry basis, typically less than 1 percent non-methane organic chemicals, and the remainder being carbon dioxide.

Lime is the generic term for a variety of chemical compounds that are produced by the calcination of limestone or dolomite. These products include but are not limited to calcium oxide, high-calcium quicklime, calcium hydroxide, hydrated lime, dolomitic quicklime, and dolomitic hydrate.

Liquid/Slurry means a manure management component in which manure is stored as excreted or with some minimal addition of water to facilitate handling and is stored in either tanks or earthen ponds, usually for periods less than one year.

Lubricants include all grades of lubricating oils, from spindle oil to cylinder oil to those used in greases. Petroleum lubricants may be produced from distillates or residues.

Makeup chemicals means carbonate chemicals (e.g., sodium and calcium carbonates) that are added to the chemical recovery areas of chemical pulp mills to replace chemicals lost in the process.

Manure composting means the biological oxidation of a solid waste including manure usually with bedding or another organic carbon source typically at thermophilic temperatures produced by microbial heat production. There are four types of composting employed for manure management: Static, in vessel, intensive windrow and passive windrow. Static composting typically occurs in an enclosed channel, with forced aeration and continuous mixing. In vessel composting occurs in piles with forced aeration but no mixing. Intensive windrow composting occurs in windrows with regular turning for mixing and aeration. Passive windrow composting occurs in windrows with infrequent turning for mixing and aeration.

Maximum rated heat input capacity means the hourly heat input to a unit (in mmBtu/hr), when it combusts the maximum amount of fuel per hour that it is capable of combusting on a steady state basis, as of the initial installation of the unit, as specified by the manufacturer.

Maximum rated input capacity means the maximum charging rate of a municipal waste combustor unit expressed in tons per day of municipal solid waste combusted, calculated according to the procedures under 40 CFR 60.58b(j).

Mcf means thousand cubic feet.

Methane conversion factor means the extent to which the CH_4 producing capacity (B_o) is realized in each type of treatment and discharge pathway and system. Thus, it is an indication of the degree to which the system is anaerobic.

Methane correction factor means an adjustment factor applied to the methane generation rate to account for portions of the landfill that remain aerobic. The methane correction factor can be considered the fraction of the total landfill waste volume that is ultimately disposed of in an anaerobic state. Managed landfills that have soil or other cover materials have a methane correction factor of 1.

Methanol (CH_3OH) is an alcohol as described in ''Oxygenates.''

Midgrade gasoline has an octane rating greater than or equal to 88 and less than or equal to 90. This definition applies to the midgrade categories of Conventional-Summer, Conventional-Winter, Reformulated-Summer, and Reformulated-Winter. For midgrade categories of RBOB-Summer, RBOB-Winter, CBOB-Summer, and CBOB-Winter, this definition refers to the expected octane rating of the finished gasoline after oxygenate has been added to the RBOB or CBOB.

Miscellaneous products include all refined petroleum products not defined elsewhere. It includes, but is not limited to, naphtha-type jet fuel (Jet B

and JP–4), petrolatum lube refining by-products (aromatic extracts and tars), absorption oils, ram-jet fuel, petroleum rocket fuels, synthetic natural gas feedstocks, waste feedstocks, and specialty oils. It excludes organic waste sludges, tank bottoms, spent catalysts, and sulfuric acid.

MMBtu means million British thermal units.

Motor gasoline (finished) means a complex mixture of volatile hydrocarbons, with or without additives, suitably blended to be used in spark ignition engines. Motor gasoline includes conventional gasoline, reformulated gasoline, and all types of oxygenated gasoline. Gasoline also has seasonal variations in an effort to control ozone levels. This is achieved by lowering the Reid Vapor Pressure (RVP) of gasoline during the summer driving season. Depending on the region of the country the RVP is lowered to below 9.0 psi or 7.8 psi. The RVP may be further lowered by state regulations.

Mscf means million standard cubic feet.

MTBE (methyl tertiary butyl ether, $(CH_3)_3COCH_3$) is an ether as described in ''Oxygenates.''

Municipal solid waste landfill or MSW landfill means an entire disposal facility in a contiguous geographical space where household waste is placed in or on land. An MSW landfill may also receive other types of RCRA Subtitle D wastes (40 CFR 257.2) such as commercial solid waste, nonhazardous sludge, conditionally exempt small quantity generator waste, and industrial solid waste. Portions of an MSW landfill may be separated by access roads, public roadways, or other public right-of-ways. An MSW landfill may be publicly or privately owned.

Municipal solid waste or MSW means solid phase household, commercial/retail, and/or institutional waste, such as, but not limited to, yard waste and refuse.

N_2O means nitrous oxide.

Naphthas (< 401 °F) is a generic term applied to a petroleum fraction with an approximate boiling range between 122 °F and 400 °F. The naphtha fraction of crude oil is the raw material for gasoline and is composed largely of paraffinic hydrocarbons.

Natural gas means a naturally occurring mixture of hydrocarbon and non-hydrocarbon gases found in geologic formations beneath the earth's surface, of which its constituents include, but are not limited to, methane, heavier hydrocarbons and carbon dioxide. Natural gas may be field quality (which varies widely) or pipeline quality. For the purposes of this subpart, the definition of natural gas includes similarly constituted fuels such as field production gas, process gas, and fuel gas.

Natural gas liquids (NGLs) means those hydrocarbons in natural gas that are separated from the gas as liquids through the process of absorption, condensation, adsorption, or other methods at lease separators and field facilities. Generally, such liquids consist of ethane, propane, butanes, and pentanes plus. Bulk NGLs refers to mixtures of NGLs that are sold or delivered as undifferentiated product from natural gas processing plants.

Natural gasoline means a mixture of liquid hydrocarbons (mostly pentanes and heavier hydrocarbons) extracted from natural gas. It includes isopentane.

NIST means the United States National Institute of Standards and Technology.

Nitric acid production line means a series of reactors and absorbers used to produce nitric acid.

Nitrogen excreted is the nitrogen that is excreted by livestock in manure and urine.

Non-crude feedstocks means any petroleum product or natural gas liquid that enters the refinery as a feedstock to be further refined or otherwise used on site.

Non-recovery coke oven battery means a group of ovens connected by common walls and operated as a unit, where coal undergoes destructive distillation under negative pressure to produce coke, and which is designed for the combustion of the coke oven gas from which by-products are not recovered.

Oil-fired unit means a stationary combustion unit that derives more than 50 percent of its annual heat input from the combustion of fuel oil, and the remainder of its annual heat input from the combustion of natural gas or other gaseous fuels.

Open-ended valve or lines (OELs) means any valve, except pressure relief valves, having one side of the valve seat in contact with process fluid and one side open to atmosphere, either directly or through open piping.

Operating hours means the duration of time in which a process or process unit is utilized; this excludes shutdown, maintenance, and standby.

Operational change means, for purposes of §98.3(b), a change in the type of feedstock or fuel used, a change in operating hours, or a change in process production rate.

Operator means any person who operates or supervises a facility or supplier.

Other oils (> 401 °F) are oils with a boiling range equal to or greater than 401 °F that are generally intended for use as a petrochemical feedstock and are not defined elsewhere.

Owner means any person who has legal or equitable title to, has a leasehold interest in, or control of a facility or supplier, except a person whose legal or equitable title to or leasehold interest in the facility or supplier arises solely because the person is a limited partner in a partnership that has legal or equitable title to, has a leasehold interest in, or control of the facility or supplier shall not be considered an ''owner'' of the facility or supplier.

Oxygenates means substances which, when added to gasoline, increase the oxygen content of the gasoline. Common oxygenates are ethanol, methyl tertiary butyl ether (MTBE), ethyl tertiary butyl ether (ETBE), tertiary amyl methyl ether (TAME), diisopropyl ether (DIPE), and methanol.

Pasture/Range/Paddock means the manure from pasture and range grazing animals is allowed to lie as deposited, and is not managed.

Pentanes plus, or C5+, is a mixture of hydrocarbons that is a liquid at ambient temperature and pressure, and consists mostly of pentanes (five carbon chain) and higher carbon number hydrocarbons. Pentanes plus includes, but is not limited to, normal pentane, isopentane, hexanes-plus (natural gasoline), and plant condensate.

Perfluorocarbons or PFCs means a class of greenhouse gases consisting on the molecular level of carbon and fluorine.

Petrochemical means methanol, acrylonitrile, ethylene, ethylene oxide, ethylene dichloride, and any form of carbon black.

Petrochemical feedstocks means feedstocks derived from petroleum for the manufacture of chemicals, synthetic rubber, and a variety of plastics. This category is usually divided into naphthas less than 401 °F and other oils greater than 401 °F.

Petroleum means oil removed from the earth and the oil derived from tar sands and shale.

Petroleum coke means a black solid residue, obtained mainly by cracking and carbonizing of petroleum derived feedstocks, vacuum bottoms, tar and pitches in processes such as delayed coking or fluid coking. It consists mainly of carbon (90 to 95 percent), has low ash content, and may be used as a feedstock in coke ovens. This product is also known as marketable coke or catalyst coke.

Petroleum product means all refined and semi-refined products that are produced at a refinery by processing crude oil and other petroleum-based feedstocks, including petroleum products derived from co-processing biomass and petroleum feedstock together, but not including plastics or plastic products. Petroleum products may be combusted for energy use, or they may be used either for non-energy processes or as non-energy products. The definition of petroleum product for importers and exporters excludes waxes.

Pit storage below animal confinement (deep pits) means the collection and storage of manure typically below a slatted floor in an enclosed animal confinement facility. This usually occurs with little or no added water for periods less than one year.

Portable means designed and capable of being carried or moved from one location to another. Indications of portability include but are not limited to wheels, skids, carrying handles, dolly, trailer, or platform. Equipment is not portable if any one of the following conditions exists:

(1) The equipment is attached to a foundation.

(2) The equipment or a replacement resides at the same location for more than 12 consecutive months.

(3) The equipment is located at a seasonal facility and operates during the full annual operating period of the seasonal facility, remains at the facility for at least two years, and operates at that facility for at least three months each year.

(4) The equipment is moved from one location to another in an attempt to circumvent the portable residence time requirements of this definition.

Poultry manure with litter means a manure management system component that is similar to cattle and swine deep bedding except usually not combined with a dry lot or pasture. The system is typically used for poultry breeder flocks and for the production of meat type chickens (broiler) and other fowl.

Poultry manure without litter means a manure management system component that may manage manure in a liquid form, similar to open pits in enclosed animal confinement facilities. These systems may alternatively be designed and operated to dry manure as it accumulates. The latter is known as a high-rise manure management system and is a form of passive windrow manure composting when designed and operated properly.

Precision of a measurement at a specified level (e.g., one percent of full scale or one percent of the value measured) means that 95 percent of repeat measurements made by a device or technique are within the range bounded by the mean of the measurements plus or minus the specified level.

Premium grade gasoline is gasoline having an antiknock index, i.e., octane rating, greater than 90. This definition applies to the premium grade categories of Conventional-Summer, Conventional-Winter, Reformulated-Summer, and Reformulated-Winter. For premium grade categories of RBOB-Summer, RBOB-Winter, CBOB-Summer, and CBOB-Winter, this definition refers to the expected octane rating of the finished gasoline after oxygenate has been added to the RBOB or CBOB.

Pressed and blown glass means glass which is pressed, blown, or both, into products such as light bulbs, glass fiber, technical glass, and other products listed in NAICS 327212.

Pressure relief device or pressure relief valve or pressure safety valve means a safety device used to prevent operating pressures from exceeding the maximum allowable working pressure of the process equipment. A common pressure relief device is but not limited to a spring-loaded pressure relief valve. Devices that are actuated either by a pressure of less than or equal to 2.5 psig or by a vacuum are not pressure relief devices.

Process emissions means the emissions from industrial processes (e.g., cement production, ammonia production) involving chemical or physical transformations other than fuel combustion. For example, the calcination of carbonates in a kiln during cement production or the oxidation of methane in an ammonia process results in the release of process CO_2 emissions to the atmosphere. Emissions from fuel combustion to provide process heat are not part of process emissions, whether the combustion is internal or external to the process equipment.

Process unit means the equipment assembled and connected by pipes and ducts to process raw materials and to manufacture either a final product or an intermediate used in the onsite production of other products. The process unit also includes the purification of recovered byproducts.

Process vent means means a gas stream that: Is discharged through a conveyance to the atmosphere either directly or after passing through a control device; originates from a unit operation, including but not limited to reactors (including reformers, crackers, and furnaces, and separation equipment for products and recovered byproducts); and contains or has the potential to contain GHG that is generated in the process. Process vent does not include safety device discharges, equipment leaks, gas streams routed to a fuel gas system or to a flare, discharges from storage tanks.

Propane is a paraffinic hydrocarbon with molecular formula C_3H_8.

Propylene is an olefinic hydrocarbon with molecular formula C_3H_6.

Pulp mill lime kiln means the combustion units (e.g., rotary lime kiln or fluidized bed calciner) used at a kraft or soda pulp mill to calcine lime mud, which consists primarily of calcium carbonate, into quicklime, which is calcium oxide.

Pushing means the process of removing the coke from the coke oven at the end of the coking cycle. Pushing begins when coke first begins to fall from the oven into the quench car and ends when the quench car enters the quench tower.

Raw mill means a ball and tube mill, vertical roller mill or other size reduction equipment, that is not part of an in-line kiln/raw mill, used to grind feed to the appropriate size. Moisture may be added or removed from the feed during the grinding operation. If the raw mill is used to remove moisture from feed materials, it is also, by definition, a raw material dryer. The raw mill also includes the air separator associated with the raw mill.

RBOB-Summer (reformulated blendstock for oxygenate blending) means a petroleum product which, when blended with a specified type and percentage of oxygenate, meets the definition of Reformulated-Summer.

RBOB-Winter (reformulated blendstock for oxygenate blending) means a petroleum product which, when blended with a specified type and percentage of oxygenate, meets the definition of Reformulated-Winter.

Reformulated-Summer refers to finished gasoline formulated for use in motor vehicles, the composition and properties of which meet the requirements of the reformulated gasoline regulations promulgated by the U.S. Environmental Protection Agency under 40 CFR 80.40 and 40 CFR 80.41, and summer RVP standards required under 40 CFR 80.27 or as specified by the state. Reformulated gasoline excludes Reformulated Blendstock for Oxygenate Blending (RBOB) as well as other blendstock.

Reformulated-Winter refers to finished gasoline formulated for use in motor vehicles, the composition and properties of which meet the requirements of the reformulated gasoline regulations promulgated by the U.S. Environmental Protection Agency under 40 CFR 80.40 and 40 CFR 80.41, but which do not meet summer RVP standards required under 40 CFR 80.27 or as specified by the state. NOTE: This category includes Oxygenated Fuels Program Reformulated Gasoline (OPRG). Reformulated gasoline excludes Reformulated Blendstock for Oxygenate Blending (RBOB) as well as other blendstock.

Regular grade gasoline is gasoline having an antiknock index, i.e., octane rating, greater than or equal to 85 and less than 88. This definition applies to the regular grade categories of Conventional-Summer, Conventional-Winter, Reformulated-Summer, and Reformulated-Winter. For regular grade categories of RBOB-Summer, RBOB-Winter, CBOB-Summer, and CBOB-Winter, this definition refers to the expected octane rating of the finished gasoline after oxygenate has been added to the RBOB or CBOB.

Rendered animal fat, or tallow, means fats extracted from animals which are generally used as a feedstock in making biodiesel.

Research and development means those activities conducted in process units or at laboratory bench-scale settings whose purpose is to conduct research and development for new processes, technologies, or products and whose purpose is not for the manufacture of products for commercial sale, except in a *de minimis* manner.

Residual Fuel Oil No. 5 (Navy Special) is a classification for the heavier fuel oil generally used in steam powered vessels in government service and inshore power plants. It has a minimum flash point of 131 °F.

Residual Fuel Oil No. 6 (a.k.a. Bunker C) is a classification for the heavier fuel oil generally used for the production of electric power, space heating, vessel bunkering and various industrial purposes. It has a minimum flash point of 140 °F.

Residuum is residue from crude oil after distilling off all but the heaviest components, with a boiling range greater than 1,000 °F.

Road oil is any heavy petroleum oil, including residual asphaltic oil used as a dust palliative and surface treatment on roads and highways. It is generally produced in six grades, from 0, the most liquid, to 5, the most viscous.

Rotary lime kiln means a unit with an inclined rotating drum that is used to produce a lime product from limestone by calcination.

Safety device means a closure device such as a pressure relief valve, frangible disc, fusible plug, or any other type of device which functions exclusively to prevent physical damage or permanent deformation to a unit or its air emission control equipment by venting gases or vapors directly to the atmosphere during unsafe conditions resulting from an unplanned, accidental, or emergency event. A safety device is not used for routine venting of gases or vapors from the vapor headspace underneath a cover such as during filling of the unit or to adjust the pressure in response to normal daily diurnal ambient temperature fluctuations. A safety device is designed to remain in a closed position during normal operations and open only when the internal pressure, or another relevant parameter, exceeds the device threshold setting applicable to the air emission control equipment as determined by the owner or operator based on manufacturer recommendations, applicable regulations, fire protection and prevention codes and practices, or other requirements for the safe handling of flammable, combustible, explosive, reactive, or hazardous materials.

Semi-refined petroleum product means all oils requiring further processing. Included in this category are unfinished oils which are produced by the partial refining of crude oil and include the following: Naphthas and lighter oils; kerosene and light gas oils; heavy gas oils; and residuum, and all products that require further processing or the addition of blendstocks.

Sendout means, in the context of a local distribution company, the total deliveries of natural gas to customers over a specified time interval (typically hour, day, month, or year). Sendout is the sum of gas received through the city gate, gas withdrawn from on-system storage or peak shaving plants, and gas produced and delivered into the distribution system; and is net of any natural gas injected into on-system storage. It comprises gas sales, exchange, deliveries, gas used by company, and unaccounted for gas. Sendout is measured at the city gate station, and other on-system receipt points from storage, peak shaving, and production.

Sensor means a device that measures a physical quantity/quality or the change in a physical quantity/quality, such as temperature, pressure, flow rate, pH, or liquid level.

SF_6 means sulfur hexafluoride.

Shutdown means the cessation of operation of an emission source for any purpose.

Silicon carbide means an artificial abrasive produced from silica sand or quartz and petroleum coke.

Sinter process means a process that produces a fused aggregate of fine iron-bearing materials suited for use in a blast furnace. The sinter machine is composed of a continuous traveling grate that conveys a bed of ore fines and other finely divided iron-bearing material and fuel (typically coke breeze), a burner at the feed end of the grate for ignition, and a series of downdraft windboxes along the length of the strand to support downdraft combustion and heat sufficient to produce a fused sinter product.

Site means any combination of one or more graded pad sites, gravel pad sites, foundations, platforms, or the immediate physical location upon which equipment is physically located.

Smelting furnace means a furnace in which lead-bearing materials, carbon-containing reducing agents, and fluxes are melted together to form a molten mass of material containing lead and slag.

Solid storage is the storage of manure, typically for a period of several months, in unconfined piles or stacks. Manure is able to be stacked due to the presence of a sufficient amount of bedding material or loss of moisture by evaporation.

Sour gas means any gas that contains significant concentrations of hydrogen sulfide. Sour gas may include untreated fuel gas, amine stripper off-gas, or sour water stripper gas.

Special naphthas means all finished products with the naphtha boiling range (290 ° to 470 °F) that are generally used as paint thinners, cleaners or solvents. These products are refined

to a specified flash point. Special naphthas include all commercial hexane and cleaning solvents conforming to ASTM Specification D1836–07, Standard Specification for Commercial Hexanes, and D235–02 (Reapproved 2007), Standard Specification for Mineral Spirits (Petroleum Spirits) (Hydrocarbon Dry Cleaning Solvent), respectively. Naphthas to be blended or marketed as motor gasoline or aviation gasoline, or that are to be used as petrochemical and synthetic natural gas (SNG) feedstocks are excluded.

Spent liquor solids means the dry weight of the solids in the spent pulping liquor that enters the chemical recovery furnace or chemical recovery combustion unit.

Spent pulping liquor means the residual liquid collected from on-site pulping operations at chemical pulp facilities that is subsequently fired in chemical recovery furnaces at kraft and soda pulp facilities or chemical recovery combustion units at sulfite or semi-chemical pulp facilities.

Standard conditions or standard temperature and pressure (STP) means 68 degrees Fahrenheit and 14.7 pounds per square inch absolute.

Steam reforming means a catalytic process that involves a reaction between natural gas or other light hydrocarbons and steam. The result is a mixture of hydrogen, carbon monoxide, carbon dioxide, and water.

Still gas means any form or mixture of gases produced in refineries by distillation, cracking, reforming, and other processes. The principal constituents are methane, ethane, ethylene, normal butane, butylene, propane, and propylene.

Storage tank means a vessel (excluding sumps) that is designed to contain an accumulation of crude oil, condensate, intermediate hydrocarbon liquids, or produced water and that is constructed entirely of non-earthen materials (e.g., wood, concrete, steel, plastic) that provide structural support.

Sulfur recovery plant means all process units which recover sulfur or produce sulfuric acid from hydrogen sulfide (H_2S) and/or sulfur dioxide (SO_2) from a common source of sour gas at a petroleum refinery. The sulfur recovery plant also includes sulfur pits used to store the recovered sulfur product, but it does not include secondary sulfur storage vessels or loading facilities downstream of the sulfur pits. For example, a Claus sulfur recovery plant includes: Reactor furnace and waste heat boiler, catalytic reactors, sulfur pits, and, if present, oxidation or reduction control systems, or incinerator, thermal oxidizer, or similar combustion device. Multiple sulfur recovery units are a single sulfur recovery plant only when the units share the same source of sour gas. Sulfur recovery units that receive source gas from completely segregated sour gas treatment systems are separate sulfur recovery plants.

Supplemental fuel means a fuel burned within a petrochemical process that is not produced within the process itself.

Supplier means a producer, importer, or exporter of a fossil fuel or an industrial greenhouse gas.

Taconite iron ore processing means an industrial process that separates and concentrates iron ore from taconite, a low grade iron ore, and heats the taconite in an indurating furnace to produce taconite pellets that are used as the primary feed material for the production of iron in blast furnaces at integrated iron and steel plants.

TAME means tertiary amyl methyl ether, $(CH_3)_2(C_2H_5)COCH_3$).

Trace concentrations means concentrations of less than 0.1 percent by mass of the process stream.

Transform means to use and entirely consume (except for trace concentrations) nitrous oxide or fluorinated GHGs in the manufacturing of other chemicals for commercial purposes. Transformation does not include burning of nitrous oxide.

Transshipment means the continuous shipment of nitrous oxide or a fluorinated GHG from a foreign state of origin through the United States or its territories to a second foreign state of final destination, as long as the shipment does not enter into United States jurisdiction. A transshipment, as it moves through the United States or its territories, cannot be re-packaged, sorted or otherwise changed in condition.

Trona means the raw material (mineral) used to manufacture soda ash; hydrated sodium bicarbonate carbonate (e.g., $Na2CO_3.NaHCO_3.2H_2O$).

Ultimate analysis means the determination of the percentages of carbon, hydrogen, nitrogen, sulfur, and chlorine and (by difference) oxygen in the gaseous products and ash after the complete combustion of a sample of an organic material.

Unfinished oils are all oils requiring further processing, except those requiring only mechanical blending.

United States means the 50 states, the District of Columbia, and U.S. possessions and territories.

Unstabilized crude oil means, for the purposes of this part, crude oil that is pumped from the well to a pipeline or pressurized storage vessel for transport to the refinery without intermediate storage in a storage tank at atmospheric pressures. Unstabilized crude oil is characterized by having a true vapor pressure of 5 pounds per square inch absolute (psia) or greater.

Valve means any device for halting or regulating the flow of a liquid or gas through a passage, pipeline, inlet, outlet, or orifice; including, but not limited to, gate, globe, plug, ball, butterfly and needle valves.

Vegetable oil means oils extracted from vegetation that are generally used as a feedstock in making biodiesel.

Volatile solids are the organic material in livestock manure and consist of both biodegradable and non-biodegradable fractions.

Waelz kiln means an inclined rotary kiln in which zinc-containing materials are charged together with a carbon reducing agent (e.g., petroleum coke, metallurgical coke, or anthracite coal).

Waxes means a solid or semi-solid material at 77 °F consisting of a mixture of hydrocarbons obtained or derived from petroleum fractions, or through a Fischer-Tropsch type process, in which the straight chained paraffin series predominates. This includes all marketable wax, whether crude or refined, with a congealing point between 80 (or 85) and 240 °F and a maximum oil content of 50 weight percent.

Wool fiberglass means fibrous glass of random texture, including fiberglass insulation, and other products listed in NAICS 327993.

You means an owner or operator subject to part 98.

Zinc smelters means a facility engaged in the production of zinc metal, zinc oxide, or zinc alloy products from zinc sulfide ore concentrates, zinc calcine, or zinc-bearing scrap and recycled materials through the use of pyrometallurgical techniques involving the reduction and volatization of zinc-bearing feed materials charged to a furnace.

§ 98.7 What standardized methods are incorporated by reference into this part?

The materials listed in this section are incorporated by reference in the corresponding sections noted. These incorporations by reference were approved by the Director of Federal Register in accordance with 5 U.S.C. 552(a) and 1 CFR part 51. These materials are incorporated as they exist on the date of approval, and a notice of any change in the materials will be published in the FEDERAL REGISTER. The materials are available for purchase at the corresponding address in this section. The materials are available for inspection at the EPA Docket Center, Public Reading Room, EPA West Building, Room 3334, 1301 Constitution Avenue, NW., Washington, DC, phone (202) 566–1744 and at the National Archives and Records Administration (NARA). For information on the availability of this material at NARA, call 202–741–6030, or go to: *http://www.archives.gov/federal_register/code_of_federal_regulations/ibr_locations.html*.

(a) The following material is available for purchase from the Association of Fertilizer and Phosphate Chemists (AFPC), P.O. Box 1645, Bartow, Florida 33831, *http://afpc.net*.

(1) Phosphate Mining States Methods Used and Adopted by the Association of Fertilizer and Phosphate Chemists AFPC Manual 10th Edition 2009—Version 1.9, incorporation by reference (IBR) approved for § 98.264(a) and § 98.264(b).

(2) [Reserved]

(b) The following material is available for purchase from the American Gas Association (AGA), 400 North Capitol Street, NW., 4th Floor, Washington, DC 20001, (202) 824–7000, *http://www.aga.org*.

(1) AGA Report No. 3 Orifice Metering of Natural Gas and Other Related Hydrocarbon Fluids Part 1: General Equations & Uncertainty Guidelines (1990), incorporation by reference (IBR) approved for §§98.34(b) and 98.244(b).

(2) AGA Report No. 3 Orifice Metering of Natural Gas and Other Related Hydrocarbon Fluids Part 2: Specification and Installation Requirements (2000), IBR approved for §§98.34(b) and 98.244(b).

(3) AGA Report No. 11 Measurement of Natural Gas by Coriolis Meter (2003), IBR approved for §§98.244(b) and 98.254(c).

(4) AGA Transmission Measurement Committee Report No. 7 Measurement of Natural Gas by Turbine Meter (2006)/February, IBR approved for §§98.34(b) and 98.244(b).

(c) The following material is available for purchase from the ASM International, 9639 Kinsman Road, Materials Park, OH 44073, (440) 338–5151, *http://www.asminternational.org*.

(1) ASM CS–104 UNS No. G10460—Alloy Digest April 1985 (Carbon Steel of Medium Carbon Content), incorporation by reference (IBR) approved for §98.174(b).

(2) [Reserved]

(d) The following material is available for purchase from the American Society of Mechanical Engineers (ASME), Three Park Avenue, New York, NY 10016–5990, (800) 843–2763, *http://www.asme.org*.

(1) ASME MFC–3M–2004 Measurement of Fluid Flow in Pipes Using Orifice, Nozzle, and Venturi, incorporation by reference (IBR) approved for §§98.34(b), 98.244(b), 98.254(c), 98.344(c), and 98.364(e).

(2) ASME MFC–4M–1986 (Reaffirmed 1997) Measurement of Gas Flow by Turbine Meters, IBR approved for §§98.34(b), 98.244(b), 98.254(c), 98.344(c), and 98.364(e).

(3) ASME MFC–5M–1985 (Reaffirmed 1994) Measurement of Liquid Flow in Closed Conduits Using Transit-Time Ultrasonic Flowmeters, IBR approved for §§98.34(b) and 98.244(b).

(4) ASME MFC–6M–1998 Measurement of Fluid Flow in Pipes Using Vortex Flowmeters, IBR approved for §§98.34(b), 98.244(b), 98.254(c), 98.344(c), and 98.364(e).

(5) ASME MFC–7M–1987 (Reaffirmed 1992) Measurement of Gas Flow by Means of Critical Flow Venturi Nozzles, IBR approved for §§98.34(b), 98.244(b), 98.254(c), 98.344(c), and 98.364(e).

(6) ASME MFC–9M–1988 (Reaffirmed 2001) Measurement of Liquid Flow in Closed Conduits by Weighing Method, IBR approved for §§98.34(b) and 98.244(b).

(7) ASME MFC–11M–2006 Measurement of Fluid Flow by Means of Coriolis Mass Flowmeters, IBR approved for §§98.244(b), 98.254(c), and 98.344(c).

(8) ASME MFC–14M–2003 Measurement of Fluid Flow Using Small Bore Precision Orifice Meters, IBR approved for §§98.244(b), 98.254(c), 98.344(c), and 98.364(e).

(9) ASME MFC–16–2007 Measurement of Liquid Flow in Closed Conduits with Electromagnetic Flowmeters, IBR approved for §98.244(b).

(10) ASME MFC–18M–2001 Measurement of Fluid Flow Using Variable Area Meters, IBR approved for §§98.244(b), 98.254(c), 98.344(c), and 98.364(e).

(11) ASME MFC–22–2007 Measurement of Liquid by Turbine Flowmeters, IBR approved for §98.244(b).

(e) The following material is available for purchase from the American Society for Testing and Material (ASTM), 100 Barr Harbor Drive, P.O. Box CB700, West Conshohocken, Pennsylvania 19428–B2959, (800) 262–1373, *http://www.astm.org*.

(1) ASTM C25–06 Standard Test Method for Chemical Analysis of Limestone, Quicklime, and Hydrated Lime, incorporation by reference (IBR) approved for §§98.114(b), 98.174(b), 98.184(b), 98.194(c), and 98.334(b).

(2) ASTM C114–09 Standard Test Methods for Chemical Analysis of Hydraulic Cement, IBR approved for §§98.84(a), 98.84(b), and 98.84(c).

(3) ASTM D235–02 (Reapproved 2007) Standard Specification for Mineral

Spirits (Petroleum Spirits) (Hydrocarbon Dry Cleaning Solvent), IBR approved for § 98.6.

(4) ASTM D240–02 (Reapproved 2007) Standard Test Method for Heat of Combustion of Liquid Hydrocarbon Fuels by Bomb Calorimeter, IBR approved for §§ 98.34(a) and 98.254(e).

(5) ASTM D388–05 Standard Classification of Coals by Rank, IBR approved for § 98.6.

(6) ASTM D910–07a Standard Specification for Aviation Gasolines, IBR approved for § 98.6.

(7) ASTM D1298–99 (Reapproved 2005) Standard Test Method for Density, Relative Density (Specific Gravity), or API Gravity of Crude Petroleum and Liquid Petroleum Products by Hydrometer Method, IBR approved for § 98.33(a).

(8) ASTM D1826–94 (Reapproved 2003) Standard Test Method for Calorific (Heating) Value of Gases in Natural Gas Range by Continuous Recording Calorimeter, IBR approved for §§ 98.34(a) and 98.254(e).

(9) ASTM D1836–07 Standard Specification for Commercial Hexanes, IBR approved for § 98.6.

(10) ASTM D1945–03 Standard Test Method for Analysis of Natural Gas by Gas Chromatography, IBR approved for §§ 98.34(b), 98.74(c), 98.164(b), 98.244(b), 98.254(d), and 98.344(b).

(11) ASTM D1946–90 (Reapproved 2006) Standard Practice for Analysis of Reformed Gas by Gas Chromatography, IBR approved for §§ 98.34(b), 98.74(c), 98.164(b), 98.254(d), 98.344(b), and 98.364(c).

(12) ASTM D2013–07 Standard Practice for Preparing Coal Samples for Analysis, IBR approved for § 98.164(b).

(13) ASTM D2234/D2234M–07 Standard Practice for Collection of a Gross Sample of Coal, IBR approved for § 98.164(b).

(14) ASTM D2502–04 Standard Test Method for Estimation of Mean Relative Molecular Mass of Petroleum Oils From Viscosity Measurements, IBR approved for §§ 98.34(b) and 98.74(c).

(15) ASTM D2503–92 (Reapproved 2007) Standard Test Method for Relative Molecular Mass (Molecular Weight) of Hydrocarbons by Thermoelectric Measurement of Vapor Pressure, IBR approved for §§ 98.34(b) and 98.74(c).

(16) ASTM D2505–88 (Reapproved 2004)e1 Standard Test Method for Ethylene, Other Hydrocarbons, and Carbon Dioxide in High-Purity Ethylene by Gas Chromatography, IBR approved for § 98.244(b).

(17) ASTM D2597–94 (Reapproved 2004) Standard Test Method for Analysis of Demethanized Hydrocarbon Liquid Mixtures Containing Nitrogen and Carbon Dioxide by Gas Chromatography, IBR approved for § 98.164(b).

(18) ASTM D3176–89 (Reapproved 2002) Standard Practice for Ultimate Analysis of Coal and Coke, IBR approved for §§ 98.74(c), 98.164(b), 98.244(b), 98.254(i), 98.284(c), 98.284(d), 98.314(c), 98.314(d), and 98.314(f).

(19) ASTM D3238–95 (Reapproved 2005) Standard Test Method for Calculation of Carbon Distribution and Structural Group Analysis of Petroleum Oils by the n-d-M Method, IBR approved for § 98.34(b), §§ 98.74(c), and 98.164(b).

(20) ASTM D3588–98 (Reapproved 2003) Standard Practice for Calculating Heat Value, Compressibility Factor, and Relative Density of Gaseous Fuels, IBR approved for §§ 98.34(a) and 98.254(e).

(21) ASTM D3682–01 (Reapproved 2006) Standard Test Method for Major and Minor Elements in Combustion Residues from Coal Utilization Processes, IBR approved for § 98.144(b).

(22) ASTM D4057–06 Standard Practice for Manual Sampling of Petroleum and Petroleum Products, IBR approved for § 98.164(b).

(23) ASTM D4177–95 (Reapproved 2005) Standard Practice for Automatic Sampling of Petroleum and Petroleum Products, IBR approved for § 98.164(b).

(24) ASTM D4809–06 Standard Test Method for Heat of Combustion of Liquid Hydrocarbon Fuels by Bomb Calorimeter (Precision Method), IBR approved for §§ 98.34(a) and 98.254(e).

(25) ASTM D4891–89 (Reapproved 2006), Standard Test Method for Heating Value of Gases in Natural Gas Range by Stoichiometric Combustion, IBR approved for §§ 98.34(a) and 98.254(e).

(26) ASTM D5291–02 (Reapproved 2007) Standard Test Methods for Instrumental Determination of Carbon, Hydrogen, and Nitrogen in Petroleum Products and Lubricants, IBR approved

for §§98.34(b), 98.74(c), 98.164(b), 98.244(b), 98.254(i).

(27) ASTM D5373–08 Standard Test Methods for Instrumental Determination of Carbon, Hydrogen, and Nitrogen in Laboratory Samples of Coal, IBR approved for §§98.34(b), 98.74(c), 98.114(b), 98.164(b), 98.174(b), 98.184(b), 98.244(b), 98.254(i), 98.274(b), 98.284(c), 98.284(d), 98.314(c), 98.314(d), 98.314(f), and 98.334(b).

(28) ASTM D5865–07a Standard Test Method for Gross Calorific Value of Coal and Coke, IBR approved for §98.34(a).

(29) ASTM D6060–96 (Reapproved 2001) Standard Practice for Sampling of Process Vents With a Portable Gas Chromatograph, IBR approved for §98.244(b).

(30) ASTM D6348–03 Standard Test Method for Determination of Gaseous Compounds by Extractive Direct Interface Fourier Transform Infrared (FTIR) Spectroscopy, IBR approved for §§98.54(b) and 98.224(b).

(31) ASTM D6609–08 Standard Guide for Part-Stream Sampling of Coal, IBR approved for §98.164(b).

(32) ASTM D6751–08 Standard Specification for Biodiesel Fuel Blend Stock (B100) for Middle Distillate Fuels, IBR approved for §98.6.

(33) ASTM D6866–08 Standard Test Methods for Determining the Biobased Content of Solid, Liquid, and Gaseous Samples Using Radiocarbon Analysis, IBR approved for §§98.33(e), 98.34(d), 98.34(e), and 98.36(e).

(34) ASTM D6883–04 Standard Practice for Manual Sampling of Stationary Coal from Railroad Cars, Barges, Trucks, or Stockpiles, IBR approved for §98.164(b).

(35) ASTM D7430–08ae1 Standard Practice for Mechanical Sampling of Coal, IBR approved for §98.164(b).

(36) ASTM D7459–08 Standard Practice for Collection of Integrated Samples for the Speciation of Biomass (Biogenic) and Fossil-Derived Carbon Dioxide Emitted from Stationary Emissions Sources, IBR approved for §§98.33(e), 98.34(d), 98.34(e), and 98.36(e).

(37) ASTM E359–00 (Reapproved 2005)e1 Standard Test Methods for Analysis of Soda Ash (Sodium Carbonate), IBR approved for §§98.294(a) and 98.294(b).

(38) ASTM E1019–08 Standard Test Methods for Determination of Carbon, Sulfur, Nitrogen, and Oxygen in Steel, Iron, Nickel, and Cobalt Alloys by Various Combustion and Fusion Techniques, IBR approved for §98.174(b).

(39) ASTM E1747–95 (Reapproved 2005) Standard Guide for Purity of Carbon Dioxide Used in Supercritical Fluid Applications, IBR approved for §98.424(b).

(40) ASTM E1915–07a Standard Test Methods for Analysis of Metal Bearing Ores and Related Materials by Combustion Infrared-Absorption Spectrometry, IBR approved for §98.174(b).

(41) ASTM E1941–04 Standard Test Method for Determination of Carbon in Refractory and Reactive Metals and Their Alloys, IBR approved for §§98.114(b), 98.184(b), 98.334(b).

(42) ASTM UOP539–97 Refinery Gas Analysis by Gas Chromatography, IBR approved for §§98.164(b), 98.244(b), and 98.254(d), and 98.344(b).

(f) The following material is available for purchase from the Gas Processors Association (GPA), 6526 East 60th Street, Tulsa, Oklahoma 74143, (918) 493–3872, *http://www.gasprocessors.com*.

(1) GPA 2172–09 Calculation of Gross Heating Value, Relative Density, Compressibility and Theoretical Hydrocarbon Liquid Content for Natural Gas Mixtures for Custody Transfer, IBR approved for §98.34(a).

(2) GPA 2261–00 Analysis for Natural Gas and Similar Gaseous Mixtures by Gas Chromatography, IBR approved for §§98.34(a), 98.164(b), 98.254(d), and 98.344(b).

(g) The following material is available for purchase from the International Standards Organization (ISO), 1, ch. de la Voie-Creuse, Case postale 56, CH–1211 Geneva 20, Switzerland, +41 22 749 01 11, *http://www.iso.org/iso/home.htm*.

(1) ISO 3170: Petroleum liquids—Manual sampling—Third Edition 2004–02–01, IBR approved for §98.164(b).

(2) ISO 3171: Petroleum Liquids—Automatic pipeline sampling—Second Edition 1988–12–01, IBR approved for §98.164(b).

(3) ISO 8316: Measurement of Liquid Flow in Closed Conduits— Method by

Collection of the Liquid in a Volumetric Tank (1987–10–01)—First Edition, IBR approved for § 98.244(b).

(4) ISO/TR 15349–1: 1998, Unalloyed steel—Determination of low carbon content. Part 1: Infrared absorption method after combustion in an electric resistance furnace (by peak separation) (1998–10–15)—First Edition, IBR approved for § 98.174(b).

(5) ISO/TR 15349–3: 1998, Unalloyed steel—Determination of low carbon content. Part 3: Infrared absorption method after combustion in an electric resistance furnace (with preheating) (1998–10–15)—First Edition, IBR approved for § 98.174(b).

(h) The following material is available for purchase from the National Lime Association (NLA), 200 North Glebe Road, Suite 800, Arlington, Virginia 22203, (703) 243–5463, *http://www.lime.org*.

(1) CO_2 Emissions Calculation Protocol for the Lime Industry—English Units Version, February 5, 2008 Revision—National Lime Association, incorporation by reference (IBR) approved for §§ 98.194(c) and 98.194(e).

(2) [Reserved]

(i) The following material is available for purchase from the National Institute of Standards and Technology (NIST), 100 Bureau Drive, Stop 1070, Gaithersburg, MD 20899–1070, (800) 877–8339, *http://www.nist.gov/index.html*.

(1) Specifications, Tolerances, and Other Technical Requirements For Weighing and Measuring Devices, NIST Handbook 44 (2009), incorporation by reference (IBR) approved for §§ 98.244(b), 98.254(h), and 98.344(a).

(2) [Reserved]

(j) The following material is available for purchase from the Technical Association of the Pulp and Paper Industry (TAPPI), 15 Technology Parkway South, Norcross, GA 30092, (800) 332–8686, *http://www.tappi.org*.

(1) T650 om-05 Solids Content of Black Liquor, TAPPI, incorporation by reference (IBR) approved for §§ 98.276(c) and 98.277(d).

(2) T684 om-06 Gross Heating Value of Black Liquor, TAPPI, incorporation by reference (IBR) approved for § 98.274(b).

§ 98.8 What are the compliance and enforcement provisions of this part?

Any violation of any requirement of this part shall be a violation of the Clean Air Act, including section 114 (42 U.S.C. 7414). A violation includes but is not limited to failure to report GHG emissions, failure to collect data needed to calculate GHG emissions, failure to continuously monitor and test as required, failure to retain records needed to verify the amount of GHG emissions, and failure to calculate GHG emissions following the methodologies specified in this part. Each day of a violation constitutes a separate violation.

§ 98.9 Addresses.

All requests, notifications, and communications to the Administrator pursuant to this part, other than submittal of the annual GHG report, shall be submitted to the following address:

(a) For U.S. mail. Director, Climate Change Division, 1200 Pennsylvania Ave., NW., Mail Code: 6207J, Washington, DC 20460.

(b) For package deliveries. Director, Climate Change Division, 1310 L St, NW., Washington, DC 20005.

TABLE A–1 TO SUBPART A OF PART 98—GLOBAL WARMING POTENTIALS

[100-Year Time Horizon]

Name	CAS No.	Chemical formula	Global warming potential (100 yr.)
Carbon dioxide	124–38–9	CO_2	1
Methane	74–82–8	CH_4	21
Nitrous oxide	10024–97–2	N_2O	310
HFC–23	75–46–7	CHF_3	11,700
HFC–32	75–10–5	CH_2F_2	650
HFC–41	593–53–3	CH_3F	150
HFC–125	354–33–6	C_2HF_5	2,800
HFC–134	359–35–3	$C_2H_2F_4$	1,000
HFC–134a	811–97–2	CH_2FCF_3	1,300

[100-Year Time Horizon]

Name	CAS No.	Chemical formula	Global warming potential (100 yr.)
HFC–143	430–66–0	$C_2H_3F_3$	300
HFC–143a	420–46–2	$C_2H_3F_3$	3,800
HFC–152	624–72–6	CH_2FCH_2F	53
HFC–152a	75–37–6	CH_3CHF_2	140
HFC–161	353–36–6	CH_3CH_2F	12
HFC–227ea	431–89–0	C_3HF_7	2,900
HFC–236cb	677–56–5	$CH_2FCF_2CF_3$	1,340
HFC–236ea	431–63–0	CHF_2CHFCF_3	1,370
HFC–236fa	690–39–1	$C_3H_2F_6$	6,300
HFC–245ca	679–86–7	$C_3H_3F_5$	560
HFC–245fa	460–73–1	$CHF_2CH_2CF_3$	1,030
HFC–365mfc	406–58–6	$CH_3CF_2CH_2CF_3$	794
HFC–43–10mee	138495–42–8	$CF_3CFHCFHCF_2CF_3$	1,300
Sulfur hexafluoride	2551–62–4	SF_6	23,900
Trifluoromethyl sulphur pentafluoride	373–80–8	SF_5CF_3	17,700
Nitrogen trifluoride	7783–54–2	NF_3	17,200
PFC–14 (Perfluoromethane)	75–73–0	CF_4	6,500
PFC–116 (Perfluoroethane)	76–16–4	C_2F_6	9,200
PFC–218 (Perfluoropropane)	76–19–7	C_3F_8	7,000
Perfluorocyclopropane	931–91–9	$C\text{-}C_3F_6$	17,340
PFC–3–1–10 (Perfluorobutane)	355–25–9	C_4F_{10}	7,000
Perfluorocyclobutane	115–25–3	$C\text{-}C_4F_8$	8,700
PFC–4–1–12 (Perfluoropentane)	678–26–2	C_5F_{12}	7,500
PFC–5–1–14 (Perfluorohexane)	355–42–0	C_6F_{14}	7,400
PFC–9–1–18	306–94–5	$C_{10}F_{18}$	7,500
HCFE–235da2 (Isoflurane)	26675–46–7	$CHF_2OCHClCF_3$	350
HFE–43–10pccc (H–Galden 1040x)	E1730133	$CHF_2OCF_2OC_2F_4OCHF_2$	1,870
HFE–125	3822–68–2	CHF_2OCF_3	14,900
HFE–134	1691–17–4	CHF_2OCHF_2	6,320
HFE–143a	421–14–7	CH_3OCF_3	756
HFE–227ea	2356–62–9	$CF_3CHFOCF_3$	1,540
HFE–236ca12 (HG–10)	78522–47–1	$CHF_2OCF_2OCHF_2$	2,800
HFE–236ea2 (Desflurane)	57041–67–5	$CHF_2OCHFCF_3$	989
HFE–236fa	20193–67–3	$CF_3CH_2OCF_3$	487
HFE–245cb2	22410–44–2	$CH_3OCF_2CF_3$	708
HFE–245fa1	84011–15–4	$CHF_2CH_2OCF_3$	286
HFE–245fa2	1885–48–9	$CHF_2OCH_2CF_3$	659
HFE–254cb2	425–88–7	$CH_3OCF_2CHF_2$	359
HFE–263fb2	460–43–5	$CF_3CH_2OCH_3$	11
HFE–329mcc2	67490–36–2	$CF_3CF_2OCF_2CHF_2$	919
HFE–338mcf2	156053–88–2	$CF_3CF_2OCH_2CF_3$	552
HFE–338pcc13 (HG–01)	188690–78–0	$CHF_2OCF_2CF_2OCHF_2$	1,500
HFE–347mcc3	28523–86–6	$CH_3OCF_2CF_2CF_3$	575
HFE–347mcf2	E1730135	$CF_3CF_2OCH_2CHF_2$	374
HFE–347pcf2	406–78–0	$CHF_2CF_2OCH_2CF_3$	580
HFE–356mec3	382–34–3	$CH_3OCF_2CHFCF_3$	101
HFE–356pcc3	160620–20–2	$CH_3OCF_2CF_2CHF_2$	110
HFE–356pcf2	E1730137	$CHF_2CH_2OCF_2CHF_2$	265
HFE–356pcf3	35042–99–0	$CHF_2OCH_2CF_2CHF_2$	502
HFE–365mcf3	378–16–5	$CF_3CF_2CH_2OCH_3$	11
HFE–374pc2	512–51–6	$CH_3CH_2OCF_2CHF_2$	557
HFE–449sl (HFE–7100)	163702–07–6	$C_4F_9OCH_3$	297
Chemical blend	163702–08–7	$(CF_3)_2CFCF_2OCH_3$	
HFE–569sf2 (HFE–7200)	163702–05–4	$C_4F_9OC_2H_5$	59
Chemical blend	163702–06–5	$(CF_3)_2CFCF_2OC_2H_5$	
Sevoflurane	28523–86–6	$CH_2FOCH(CF_3)_2$	345
HFE–356mm1	13171–18–1	$(CF_3)_2CHOCH_3$	27
HFE–338mmz1	26103–08–2	$CHF_2OCH(CF_3)_2$	380
(Octafluorotetramethy-lene)hydroxymethyl group.	NA	$X\text{-}(CF_2)_4CH(OH)\text{-}X$	73
HFE–347mmy1	22052–84–2	$CH_3OCF(CF_3)_2$	343
Bis(trifluoromethyl)-methanol	920–66–1	$(CF_3)_2CHOH$	195
2,2,3,3,3-pentafluoropropanol	422–05–9	$CF_3CF_2CH_2OH$	42
PFPMIE	NA	$CF_3OCF(CF_3)CF_2OCF_2OCF_3$	10,300

NA = not available.

TABLE A–2 TO SUBPART A OF PART 98—UNITS OF MEASURE CONVERSIONS

To convert from	To	Multiply by
Kilograms (kg)	Pounds (lbs)	2.20462
Pounds (lbs)	Kilograms (kg)	0.45359
Pounds (lbs)	Metric tons	4.53592×10^{-4}
Short tons	Pounds (lbs)	2,000
Short tons	Metric tons	0.90718
Metric tons	Short tons	1.10231
Metric tons	Kilograms (kg)	1,000
Cubic meters (m^3)	Cubic feet (ft^3)	35.31467
Cubic feet (ft^3)	Cubic meters (m^3)	0.028317
Gallons (liquid, US)	Liters (l)	3.78541
Liters (l)	Gallons (liquid, US)	0.26417
Barrels of Liquid Fuel (bbl)	Cubic meters (m^3)	0.15891
Cubic meters (m^3)	Barrels of Liquid Fuel (bbl)	6.289
Barrels of Liquid Fuel (bbl)	Gallons (liquid, US)	42
Gallons (liquid, US)	Barrels of Liquid Fuel (bbl)	0.023810
Gallons (liquid, US)	Cubic meters (m^3)	0.0037854
Liters (l)	Cubic meters (m^3)	0.001
Feet (ft)	Meters (m)	0.3048
Meters (m)	Feet (ft)	3.28084
Miles (mi)	Kilometers (km)	1.60934
Kilometers (km)	Miles (mi)	0.62137
Square feet (ft^2)	Acres	2.29568×10^{-5}
Square meters (m^2)	Acres	2.47105×10^{-4}
Square miles (mi^2)	Square kilometers (km^2)	2.58999
Degrees Celsius (°C)	Degrees Fahrenheit (°F)	°C = (5/9) × (°F −32)
Degrees Fahrenheit (°F)	Degrees Celsius (°C)	°F = (9/5) × °C + 32
Degrees Celsius (°C)	Kelvin (K)	K = °C + 273.15
Kelvin (K)	Degrees Rankine (°R)	1.8
Joules	Btu	9.47817×10^{-4}
Btu	MMBtu	1×10^{-6}
Pascals (Pa)	Inches of Mercury (in Hg)	2.95334×10^{-4}
Inches of Mercury (inHg)	Pounds per square inch (psi)	0.49110
Pounds per square inch (psi)	Inches of Mercury (in Hg)	2.03625

Subpart B [Reserved]

Subpart C—General Stationary Fuel Combustion Sources

§ 98.30 Definition of the source category.

(a) Stationary fuel combustion sources are devices that combust solid, liquid, or gaseous fuel, generally for the purposes of producing electricity, generating steam, or providing useful heat or energy for industrial, commercial, or institutional use, or reducing the volume of waste by removing combustible matter. Stationary fuel combustion sources include, but are not limited to, boilers, simple and combined-cycle combustion turbines, engines, incinerators, and process heaters.

(b) This source category does not include:

(1) Portable equipment, as defined in § 98.6.

(2) Emergency generators and emergency equipment, as defined in § 98.6.

(3) Irrigation pumps at agricultural operations.

(4) Flares, unless otherwise required by provisions of another subpart of 40 CFR part 98 to use methodologies in this subpart.

(5) Electricity generating units that are subject to subpart D of this part.

(c) For a unit that combusts hazardous waste (as defined in 40 CFR 261.3), reporting of GHG emissions is not required unless either of the following conditions apply:

(1) Continuous emission monitors (CEMS) are used to quantify CO_2 mass emissions.

(2) Any fuel listed in Table C–1 of this subpart is also combusted in the unit. In this case, report GHG emissions from combustion of all fuels listed in Table C–1 of this subpart.

§ 98.31 Reporting threshold.

You must report GHG emissions under this subpart if your facility contains one or more stationary fuel combustion sources and the facility meets

the applicability requirements of either §98.2(a)(1), §98.2(a)(2), or §98.2(a)(3).

§98.32 GHGs to report.

You must report CO_2, CH_4, and N_2O mass emissions from each stationary fuel combustion unit.

§98.33 Calculating GHG emissions.

You must calculate CO_2 emissions according to paragraph (a) of this section, and calculate CH_4 and N_2O emissions according to paragraph (c) of this section.

(a) *CO_2 emissions from fuel combustion.* Calculate CO_2 emissions by using one of the four calculation methodologies in this paragraph (a) subject to the conditions, requirements, and restrictions set forth in paragraph (b) of this section. If you co-fire biomass fuels with fossil fuels, report CO_2 emissions from the combustion of biomass separately using the methods in paragraph (e) of this section.

(1) *Tier 1 Calculation Methodology.* Calculate the annual CO_2 mass emissions for each type of fuel by using Equation C–1 of this section.

$$CO_2 = 1\,x\,10^{-3} * Fuel * HHV * EF \qquad \text{(Eq. C-1)}$$

Where:

CO_2 = Annual CO_2 mass emissions for the specific fuel type (metric tons).

Fuel = Mass or volume of fuel combusted per year, from company records as defined in §98.6 (express mass in short tons for solid fuel, volume in standard cubic feet for gaseous fuel, and volume in gallons for liquid fuel).

HHV = Default high heat value of the fuel, from Table C–1 of this subpart (mmBtu per mass or mmBtu per volume, as applicable).

EF = Fuel-specific default CO_2 emission factor, from Table C–1 of this subpart (kg CO_2/mmBtu).

1×10^{-3} = Conversion factor from kilograms to metric tons.

(2) *Tier 2 Calculation Methodology.* Calculate the annual CO_2 mass emissions for each type of fuel by using either Equation C2a or C2c of this section, as appropriate.

(i) Equation C–2a of this section applies to any type of fuel listed in Table C–1 of the subpart, except for municipal solid waste (MSW). For MSW combustion, use Equation C–2c of this section.

$$CO_2 = 1\,x\,10^{-3} * Fuel * HHV * EF \qquad \text{(Eq. C-2a)}$$

Where:

CO_2 = Annual CO_2 mass emissions for a specific fuel type (metric tons).

Fuel = Mass or volume of the fuel combusted during the year, from company records as defined in §98.6 (express mass in short tons for solid fuel, volume in standard cubic feet for gaseous fuel, and volume in gallons for liquid fuel).

HHV = Annual average high heat value of the fuel from all valid samples for the year (mmBtu per mass or volume). The average HHV shall be calculated according to the requirements of paragraph (a)(2)(ii) of this section.

EF = Fuel-specific default CO_2 emission factor, from Table C–1 of this subpart (kg CO_2/mmBtu).

1×10^{-3} = Conversion factor from kilograms to metric tons.

(ii) The minimum number of HHV samples for determining annual average HHV is specified (e.g., monthly, quarterly, semi-annually, or by lot) in §98.34. The method for computing the annual average HHV is a function of how frequently you perform or receive from the fuel supplier the results of fuel sampling for HHV. The method is specified in paragraph (a)(2)(ii)(A) or (a)(2)(ii)(B) of this section, as applicable.

(A) If the results of fuel sampling are received monthly or more frequently, then the annual average HHV shall be

calculated using Equation C–2b of this section. If multiple HHV determinations are made in any month, average the values for the month arithmetically.

$$(HHV)_{annual} = \frac{\sum_{i=1}^{n}(HHV)_i * (Fuel)_i}{\sum_{i=1}^{n}(Fuel)_i} \qquad \text{(Eq. C-2b)}$$

Where:

$(HHV)_{annual}$ = Weighted annual average high heat value of the fuel (mmBtu per mass or volume).

$(HHV)_i$ = High heat value of the fuel, for month ''i'' (mmBtu per mass or volume).

$(Fuel)_i$ = Mass or volume of the fuel combusted during month ''i'' (express mass in short tons for solid fuel, volume in standard cubic feet for gaseous fuel, and volume in gallons for liquid fuel).

n = Number of months in the year that fuel is burned in the unit.

(B) If the results of fuel sampling are received less frequently than monthly, then the annual average HHV shall be computed as the arithmetic average HHV for all values for the year (including valid samples and substitute data values under § 98.35).

(iii) For units that combust municipal solid waste (MSW) and that produce steam, use Equation C–2c of this section. Equation C–2c of this section may also be used for any other solid fuel listed in Table C–1 of this subpart provided that steam is generated by the unit.

$$CO_2 = 1 \text{ x } 10^{-3} \text{ Steam} * B * EF \qquad \text{(Eq. C-2c)}$$

Where:

CO_2 = Annual CO_2 mass emissions from MSW or solid fuel combustion (metric tons).

Steam = Total mass of steam generated by MSW or solid fuel combustion during the reporting year (lb steam).

B = Ratio of the boiler's maximum rated heat input capacity to its design rated steam output capacity (mmBtu/lb steam).

EF = Fuel-specific default CO_2 emission factor, from Table C–1 of this subpart (kg CO_2/mmBtu).

1×10^{-3} = Conversion factor from kilograms to metric tons.

(3) *Tier 3 Calculation Methodology*. Calculate the annual CO_2 mass emissions for each fuel by using either Equation C3, C4, or C5 of this section, as appropriate.

(i) For a solid fuel, use Equation C–3 of this section.

$$CO_2 = \frac{44}{12} * \text{Fuel} * CC * 0.91 \qquad \text{(Eq. C-3)}$$

Where:

CO_2 = Annual CO_2 mass emissions from the combustion of the specific solid fuel (metric tons).

Fuel = Annual mass of the solid fuel combusted, from company records as defined in § 98.6 (short tons).

CC = Annual average carbon content of the solid fuel (percent by weight, expressed as a decimal fraction, e.g., 95% = 0.95). The

annual average carbon content shall be determined using the same procedures as specified for HHV in paragraph (a)(2)(ii) of this section.

44/12 = Ratio of molecular weights, CO_2 to carbon.

0.91 = Conversion factor from short tons to metric tons.

(ii) For a liquid fuel, use Equation C–4 of this section.

$$CO_2 = \frac{44}{12} * \text{Fuel} * \text{CC} * 0.001 \qquad \text{(Eq. C-4)}$$

Where:

CO_2 = Annual CO_2 mass emissions from the combustion of the specific liquid fuel (metric tons).

Fuel = Annual volume of the liquid fuel combusted (gallons). The volume of fuel combusted must be measured directly, using fuel flow meters calibrated according to §98.3(i). Fuel billing meters may be used for this purpose. Tank drop measurements may also be used.

CC = Annual average carbon content of the liquid fuel (kg C per gallon of fuel). The annual average carbon content shall be determined using the same procedures as specified for HHV in paragraph (a)(2)(ii) of this section.

44/12 = Ratio of molecular weights, CO_2 to carbon.

0.001 = Conversion factor from kg to metric tons.

(iii) For a gaseous fuel, use Equation C–5 of this section.

$$CO_2 = \frac{44}{12} * Fuel * CC * \frac{MW}{MVC} * 0.001 \qquad \text{(Eq. C-5)}$$

Where:

CO_2 = Annual CO_2 mass emissions from combustion of the specific gaseous fuel (metric tons).

Fuel = Annual volume of the gaseous fuel combusted (scf). The volume of fuel combusted must be measured directly, using fuel flow meters calibrated according to §98.3(i). Fuel billing meters may be used for this purpose.

CC = Annual average carbon content of the liquid fuel (kg C per gallon of fuel). The annual average carbon content shall be determined using the same procedures as specified for HHV in paragraph (a)(2)(ii) of this section.

MW = Annual average molecular weight of the gaseous fuel (kg/kg-mole). The annual average carbon content shall be determined using the same procedures as specified for HHV in paragraph (a)(2)(ii) of this section.

MVC = Molar volume conversion factor (849.5 scf per kg-mole at standard conditions, as defined in §98.6).

44/12 = Ratio of molecular weights, CO_2 to carbon.

0.001 = Conversion factor from kg to metric tons.

(iv) Fuel flow meters that measure mass flow rates may be used for liquid fuels, provided that the fuel density is used to convert the readings to volumetric flow rates. The density shall be measured at the same frequency as the carbon content, using ASTM D1298–99 (Reapproved 2005) ''Standard Test Method for Density, Relative Density (Specific Gravity), or API Gravity of Crude Petroleum and Liquid Petroleum Products by Hydrometer Method'' (incorporated by reference, see §98.7).

(v) The following default density values may be used for fuel oil, in lieu of using the ASTM method in paragraph (a)(3)(iv) of this section: 6.8 lb/gal for No. 1 oil; 7.2 lb/gal for No. 2 oil; 8.1 lb/gal for No. 6 oil.

(4) *Tier 4 Calculation Methodology*. Calculate the annual CO_2 mass emissions from all fuels combusted in a unit, by using quality-assured data from continuous emission monitoring systems (CEMS).

(i) This methodology requires a CO_2 concentration monitor and a stack gas

volumetric flow rate monitor, except as otherwise provided in paragraph (a)(4)(iv) of this section. Hourly measurements of CO_2 concentration and stack gas flow rate are converted to CO_2 mass emission rates in metric tons per hour.

(ii) When the CO_2 concentration is measured on a wet basis, Equation C–6 of this section is used to calculate the hourly CO_2 emission rates:

$$CO_2 = 5.18\,x\,10^{-7} * C_{CO2} * Q \quad \text{(Eq. C-6)}$$

Where:

CO_2 = CO_2 mass emission rate (metric tons/hr).

C_{CO2} = Hourly average CO_2 concentration (% CO_2).

Q = Hourly average stack gas volumetric flow rate (scfh).

5.18×10^{-7} = Conversion factor (metric tons/scf/% CO_2).

(iii) If the CO_2 concentration is measured on a dry basis, a correction for the stack gas moisture content is required. You shall either continuously monitor the stack gas moisture content as described in § 75.11(b)(2) of this chapter or, for certain types of fuel, use a default moisture percentage from § 75.11(b)(1) of this chapter. For each unit operating hour, a moisture correction must be applied to Equation C–6 of this section as follows:

$$CO_2^* = CO_2\left(\frac{100 - \%H_2O}{100}\right) \quad \text{(Eq. C-7)}$$

Where:

CO_2* = Hourly CO_2 mass emission rate, corrected for moisture (metric tons/hr).

CO_2 = Hourly CO_2 mass emission rate from Equation C-6 of this section, uncorrected (metric tons/hr).

%H_2O = Hourly moisture percentage in the stack gas (measured or default value, as appropriate).

(iv) An oxygen (O_2) concentration monitor may be used in lieu of a CO_2 concentration monitor to determine the hourly CO_2 concentrations, in accordance with Equation F–14a or F–14b (as applicable) in appendix F to 40 CFR part 75, if the effluent gas stream monitored by the CEMS consists solely of combustion products (i.e., no process CO_2 emissions are mixed with the combustion products) and if only fuels that are listed in Table 1 in section 3.3.5 of appendix F to 40 CFR part 75 are combusted in the unit. If the O_2 monitoring option is selected, the F-factors used in Equations F–14a and F–14b shall be determined according to section 3.3.5 or section 3.3.6 of appendix F to 40 CFR part 75, as applicable. If Equation F–14b is used, the hourly moisture percentage in the stack gas shall be either a measured value in accordance with § 75.11(b)(2) of this chapter, or, for certain types of fuel, a default moisture value from § 75.11(b)(1) of this chapter.

(v) Each hourly CO_2 mass emission rate from Equation C–6 or C–7 of this section is multiplied by the operating time to convert it from metric tons per hour to metric tons. The operating time is the fraction of the hour during which fuel is combusted (e.g., the unit operating time is 1.0 if the unit operates for the whole hour and is 0.5 if the unit operates for 30 minutes in the hour). For common stack configurations, the operating time is the fraction of the hour during which effluent gases flow through the common stack.

(vi) The hourly CO_2 mass emissions are then summed over each calendar quarter and the quarterly totals are summed to determine the annual CO_2 mass emissions.

(vii) If both biomass and fossil fuel are combusted during the year, determine and report the biogenic CO_2 mass emissions separately, as described in paragraph (e) of this section.

(5) *Alternative methods for units with continuous monitoring systems.* Units not subject to the Acid Rain Program that report data to EPA according to 40 CFR part 75 may use the alternative methods in this paragraph in lieu of using any of the four calculation methodology tiers.

(i) For a unit that combusts only natural gas and/or fuel oil, is not subject to the Acid Rain Program, monitors and reports heat input data year-round according to appendix D to 40 CFR part 75, but is not required by the applicable 40 CFR part 75 program to report CO_2 mass emissions data, calculate the annual CO_2 mass emissions for the purposes of this part as follows:

(A) Use the hourly heat input data from appendix D to 40 CFR part 75, together with Equation G–4 in appendix G to 40 CFR part 75 to determine the

hourly CO_2 mass emission rates, in units of tons/hr;

(B) Use Equations F–12 and F–13 in appendix F to 40 CFR part 75 to calculate the quarterly and cumulative annual CO_2 mass emissions, respectively, in units of short tons; and

(C) Divide the cumulative annual CO_2 mass emissions value by 1.1 to convert it to metric tons.

(ii) For a unit that combusts only natural gas and/or fuel oil, is not subject to the Acid Rain Program, monitors and reports heat input data year-round according to 40 CFR 75.19 of this chapter but is not required by the applicable 40 CFR part 75 program to report CO_2 mass emissions data, calculate the annual CO_2 mass emissions for the purposes of this part as follows:

(A) Calculate the hourly CO_2 mass emissions, in units of short tons, using Equation LM–11 in 40 CFR 75.19(c)(4)(iii).

(B) Sum the hourly CO_2 mass emissions values over the entire reporting year to obtain the cumulative annual CO_2 mass emissions, in units of short tons.

(C) Divide the cumulative annual CO_2 mass emissions value by 1.1 to convert it to metric tons.

(iii) For a unit that is not subject to the Acid Rain Program, uses flow rate and CO_2 (or O_2) CEMS to report heat input data year-round according to 40 CFR part 75, but is not required by the applicable 40 CFR part 75 program to report CO_2 mass emissions data, calculate the annual CO_2 mass emissions as follows:

(A) Use Equation F–11 or F–2 (as applicable) in appendix F to 40 CFR part 75 to calculate the hourly CO_2 mass emission rates from the CEMS data. If an O_2 monitor is used, convert the hourly average O_2 readings to CO_2 using Equation F–14a or F–14b in appendix F to 40 CFR part 75 (as applicable), before applying Equation F–11 or F–2.

(B) Use Equations F–12 and F–13 in appendix F to 40 CFR part 75 to calculate the quarterly and cumulative annual CO_2 mass emissions, respectively, in units of short tons.

(C) Divide the cumulative annual CO_2 mass emissions value by 1.1 to convert it to metric tons.

(D) If both biomass and fossil fuel are combusted during the year, determine and report the biogenic CO_2 mass emissions separately, as described in paragraph (e) of this section.

(b) *Use of the four tiers*. Use of the four tiers of CO_2 emissions calculation methodologies described in paragraph (a) of this section is subject to the following conditions, requirements, and restrictions:

(1) The Tier 1 Calculation Methodology:

(i) May be used for any fuel listed in Table C–1 of this subpart that is combusted in a unit with a maximum rated heat input capacity of 250 mmBtu/hr or less.

(ii) May be used for MSW in a unit of any size that does not produce steam, if the use of Tier 4 is not required.

(iii) May be used for solid, gaseous, or liquid biomass fuels in a unit of any size provided that the fuel is listed in Table C–1 of this subpart.

(iv) May not be used if you routinely perform fuel sampling and analysis for the fuel high heat value (HHV) or routinely receive the results of HHV sampling and analysis from the fuel supplier at the minimum frequency specified in §98.34(a), or at a greater frequency. In such cases, Tier 2 shall be used.

(2) The Tier 2 Calculation Methodology:

(i) May be used for the combustion of any type of fuel in a unit with a maximum rated heat input capacity of 250 mmBtu/hr or less provided that the fuel is listed in Table C–1 of this subpart.

(ii) May be used in a unit with a maximum rated heat input capacity greater than 250 mmBtu/hr for the combustion of pipeline quality natural gas and distillate fuel oil.

(iii) May be used for MSW in a unit of any size that produces steam, if the use of Tier 4 is not required.

(3) The Tier 3 Calculation Methodology:

(i) May be used for a unit of any size that combusts any type of fuel listed in Table C–1 of this subpart (except for MSW), unless the use of Tier 4 is required.

(ii) Shall be used for a unit with a maximum rated heat input capacity

greater than 250 mmBtu/hr that combusts any type of fuel listed in Table C–1 of this subpart (except MSW), unless either of the following conditions apply:

(A) The use of Tier 1 or 2 is permitted, as described in paragraphs (b)(1)(iii) and (b)(2)(ii) of this section.

(B) The use of Tier 4 is required.

(iii) Shall be used for a fuel not listed in Table C–1 of this subpart if the fuel is combusted in a unit with a maximum rated heat input capacity greater than 250 mmBtu/hr provided that both of the following conditions apply:

(A) The use of Tier 4 is not required.

(B) The fuel provides 10% or more of the annual heat input to the unit or, if § 98.36(c)(3) applies, to a group of units served by common supply pipe.

(4) The Tier 4 Calculation Methodology:

(i) May be used for a unit of any size, combusting any type of fuel.

(ii) Shall be used if the unit meets all six of the conditions specified in paragraphs (b)(4)(ii)(A) through (b)(4)(ii)(F) of this section:

(A) The unit has a maximum rated heat input capacity greater than 250 mmBtu/hr, or if the unit combusts municipal solid waste and has a maximum rated input capacity greater than 250 tons per day of MSW.

(B) The unit combusts solid fossil fuel or MSW, either as a primary or secondary fuel.

(C) The unit has operated for more than 1,000 hours in any calendar year since 2005.

(D) The unit has installed CEMS that are required either by an applicable Federal or State regulation or the unit's operating permit.

(E) The installed CEMS include a gas monitor of any kind or a stack gas volumetric flow rate monitor, or both and the monitors have been certified, either in accordance with the requirements of 40 CFR part 75, part 60 of this chapter, or an applicable State continuous monitoring program.

(F) The installed gas or stack gas volumetric flow rate monitors are required, either by an applicable Federal or State regulation or by the unit's operating permit, to undergo periodic quality assurance testing in accordance with either appendix B to 40 CFR part 75, appendix F to 40 CFR part 60, or an applicable State continuous monitoring program.

(iii) Shall be used for a unit with a maximum rated heat input capacity of 250 mmBtu/hr or less and for a unit that combusts municipal solid waste with a maximum rated input capacity of 250 tons of MSW per day or less, if the unit meets all of the following three conditions:

(A) The unit has both a stack gas volumetric flow rate monitor and a CO_2 concentration monitor.

(B) The unit meets the conditions specified in paragraphs (b)(4)(ii)(B) through (b)(4)(ii)(D) of this section.

(C) The CO_2 and stack gas volumetric flow rate monitors meet the conditions specified in paragraphs (b)(4)(ii)(E) and (b)(4)(ii)(F) of this section.

(5) The Tier 4 Calculation Methodology shall be used beginning on:

(i) January 1, 2010, for a unit that is required to report CO_2 mass emissions beginning on that date, if all of the monitors needed to measure CO_2 mass emissions have been installed and certified by that date.

(ii) January 1, 2011, for a unit that is required to report CO_2 mass emissions beginning on January 1, 2010, if all of the monitors needed to measure CO_2 mass emissions have not been installed and certified by January 1, 2010. In this case, you may use Tier 2 or Tier 3 to report GHG emissions for 2010.

(6) You may elect to use any applicable higher tier for one or more of the fuels combusted in a unit. For example, if a 100 mmBtu/hr unit combusts natural gas and distillate fuel oil, you may elect to use Tier 1 for natural gas and Tier 3 for the fuel oil, even though Tier 1 could have been used for both fuels. However, for units that use either the Tier 4 or the alternative calculation methodology specified in paragraph (a)(5) of this section, CO_2 emissions from the combustion of all fuels shall be based solely on CEMS measurements.

(c) *Calculation of CH_4 and N_2O emissions from stationary combustion sources.* You must calculate annual CH_4 and N_2O mass emissions only for units that are required to report CO_2 emissions using the calculation methodologies of this subpart and for only those fuels

that are listed in Table C–2 of this subpart.

(1) Use Equation C–8 of this section to estimate CH_4 and N_2O emissions for any fuels for which you use the Tier 1 or Tier 3 calculation methodologies for CO_2. Use the same values for fuel combustion that you use for the Tier 1 or Tier 3 calculation.

$$CH_4 \text{ or } N_2O = 1 \text{ x } 10^{-3} * Fuel * HHV * EF \qquad \text{(Eq. C-8)}$$

Where:

CH_4 or N_2O = Annual CH_4 or N_2O emissions from the combustion of a particular type of fuel (metric tons).

Fuel = Mass or volume of the fuel combusted, either from company records or directly measured by a fuel flow meter, as applicable (mass or volume per year).

HHV = Default high heat value of the fuel from Table C–1 of this subpart (mmBtu per mass or volume).

EF = Fuel-specific default emission factor for CH_4 or N_2O, from Table C–2 of this subpart (kg CH_4 or N_2O per mmBtu).

1×10^{-3} = Conversion factor from kilograms to metric tons.

(2) Use Equation C–9a of this section to estimate CH_4 and N_2O emissions for any fuels for which you use the Tier 2 Equation C–2a of this section to estimate CO_2 emissions. Use the same values for fuel combustion and HHV that you use for the Tier 1 or Tier 3 calculation.

$$\text{CH}_4 \text{ or N}_2\text{O} = 1 \text{ x } 10^{-3} * \text{HHV} * \text{EF} * \text{Fuel} \qquad \text{(Eq. C-9a)}$$

Where:

CH_4 or N_2O = Annual CH_4 or N_2O emissions from the combustion of a particular type of fuel (metric tons).

Fuel = Mass or volume of the fuel combusted during the reporting year.

HHV = High heat value of the fuel, averaged for all valid measurements for the reporting year (mmBtu per mass or volume).

EF = Fuel-specific default emission factor for CH_4 or N_2O, from Table C–2 of this subpart (kg CH_4 or N_2O per mmBtu).

1×10^{-3} = Conversion factor from kilograms to metric tons.

(3) Use Equation C–9b of this section to estimate CH_4 and N_2O emissions for any fuels for which you use Equation C–2c of this section to calculate the CO_2 emissions. Use the same values for steam generation and the ratio ''B'' that you use for Equation C–2c.

$$\text{CH}_4 \text{ or N}_2\text{O} = 1 \text{ x } 10^{-3} \text{ Steam} * \text{B} * \text{EF} \qquad \text{(Eq. C-9b)}$$

Where:

CH_4 or N_2O = Annual CH_4 or N_2O emissions from the combustion of a solid fuel (metric tons).

Steam = Total mass of steam generated by solid fuel combustion during the reporting year (lb steam).

B = Ratio of the boiler's maximum rated heat input capacity to its design rated steam output (mmBtu/lb steam).

EF = Fuel-specific emission factor for CH_4 or N_2O, from Table C–2 of this subpart (kg CH_4 or N_2O per mmBtu).

1×10^{-3} = Conversion factor from kilograms to metric tons.

(4) Use Equation C–10 of this section for units in the Acid Rain Program, units that monitor and report heat input on a year-round basis according to 40 CFR part 75, and units that use the Tier 4 Calculation Methodology.

$$CH_4 \text{ or } N_2O = 0.001 * (HI)_A * EF \qquad \text{(Eq. C-10)}$$

Where:

CH_4 or N_2O = Annual CH_4 or N_2O emissions from the combustion of a particular type of fuel (metric tons).

$(HI)_A$ = Cumulative annual heat input from the fuel, derived from the electronic data reports required under § 75.64 of this chapter or, for Tier 4 units, from the best available information as described in paragraph (c)(4)(ii) of this section (mmBtu).

EF = Fuel-specific emission factor for CH_4 or N_2O, from Table C–2 of this section (kg CH_4 or N_2O per mmBtu).

0.001 = Conversion factor from kg to metric tons.

(i) If only one type of fuel listed in Table C–2 of this subpart is combusted during normal operation, substitute the cumulative annual heat input from combustion of the fuel into Equation C–10 of this section to calculate the annual CH_4 or N_2O emissions.

(ii) If more than one type of fuel listed in Table C–2 of this subpart is combusted during normal operation, use Equation C–10 of this section separately for each type of fuel. If flow rate and diluent gas monitors are used to measure the unit heat input, use the best available information (e.g., fuel feed rate measurements, fuel heating values, engineering analysis) to estimate the annual heat input from each type of fuel.

(5) When multiple fuels are combusted during the reporting year, sum the fuel-specific results from Equations C–8, C–9a, C–9b, or C–10 of this section (as applicable) to obtain the total annual CH_4 and N_2O emissions, in metric tons.

(d) *Calculation of CO_2 from sorbent.* (1) When a unit is a fluidized bed boiler, is equipped with a wet flue gas desulfurization system, or uses other acid gas emission controls with sorbent injection, use Equation C–11 of this section to calculate the CO_2 emissions from the sorbent, if those CO_2 emissions are not monitored by CEMS:

$$CO_2 = 0.91 * S * R * \left(\frac{MW_{CO2}}{MW_S} \right) \qquad \text{(Eq. C-11)}$$

Where:

CO_2 = CO_2 emitted from sorbent for the reporting year (metric tons).

S = Limestone or other sorbent used in the reporting year, from company records (short tons).

R = 1.00, the calcium-to-sulfur stoichiometric ratio.

MW_{CO2} = Molecular weight of carbon dioxide (44).

MW_S = Molecular weight of sorbent (100 if calcium carbonate).

0.91 = Conversion factor from short tons to metric tons.

(2) The annual CO_2 mass emissions for the unit shall be the sum of the CO_2 emissions from the combustion process and the CO_2 emissions from the sorbent.

(e) *CO_2 emissions from combustion of biomass.* Use the procedures of this paragraph (e) to estimate biogenic CO_2 emissions from units that combust a combination of biomass and fossil fuels. Reporting of CO_2 emissions from combustion of biomass is required only for those biomass fuels listed in Table C–1 of this section, unless emissions are measured using CEMS.

(1) If CEMS are not used to measure CO_2, use Equation C–1 of this subpart to calculate the annual CO_2 mass emissions from the combustion of biomass (except MSW) for a unit of any size. Determine the mass of biomass combusted using one of the following procedures in this paragraph (e)(1), as appropriate.

(i) Use company records.

(ii) Follow the procedures in paragraph (e)(5) of this section.

(iii) For premixed fuels that contain biomass and fossil fuels (e.g., mixtures containing biodiesel), use best available information to determine the

mass of biomass fuels and document the procedure used in the GHG Monitoring Plan required by §98.3(g)(5).

(2) If a CO_2 CEMS (or a surrogate O_2 monitor) and a stack gas flow rate monitor are used to determine the annual CO_2 mass emissions either according to 40 CFR part 75, the Tier 4 Calculation Methodology, or the alternative calculation methodology specified in paragraph (a)(5)(iii); and if both fossil fuel and biomass (except for MSW) are combusted in the unit during the reporting year, you may use the following procedure to determine the annual biogenic CO_2 mass emissions. If MSW is combusted in the unit, follow the procedures in paragraph (e)(3) of this section.

(i) For each operating hour, use Equation C–12 of this section to determine the volume of CO_2 emitted.

$$V_{CO2h} = \frac{(\%CO_2)_h}{100} * Q_h * t_h \qquad \text{(Eq. C-12)}$$

Where:

V_{CO2h} = Hourly volume of CO_2 emitted (scf).

$(\%CO_2)_h$ = Hourly average CO_2 concentration, measured by the CO_2 concentration monitor, or, if applicable, calculated from the hourly average O_2 concentration ($\%CO_2$).

Q_h = Hourly average stack gas volumetric flow rate, measured by the stack gas volumetric flow rate monitor (scfh).

t_h = Source operating time (decimal fraction of the hour during which the source combusts fuel, i.e., 1.0 for a full operating hour, 0.5 for 30 minutes of operation, etc.).

100 = Conversion factor from percent to a decimal fraction.

(ii) Sum all of the hourly V_{CO2h} values for the reporting year, to obtain V_{total}, the total annual volume of CO_2 emitted.

(iii) Calculate the annual volume of CO_2 emitted from fossil fuel combustion using Equation C–13 of this section. If two or more types of fossil fuel are combusted during the year, perform a separate calculation with Equation C–13 of this section for each fuel and sum the results.

$$V_{ff} = \frac{\text{Fuel} * F_c * \text{HHV}}{10^6} \qquad \text{(Eq. C-13)}$$

Where:

V_{ff} = Annual volume of CO_2 emitted from combustion of a particular fossil fuel (scf).

Fuel = Total quantity of the fossil fuel combusted in the reporting year, from company records, as defined in §98.6 (lb for solid fuel, gallons for liquid fuel, and scf for gaseous fuel).

F_c = Fuel-specific carbon based F-factor, either a default value from Table 1 in section 3.3.5 of appendix F to 40 CFR part 75 or a site-specific value determined under section 3.3.6 of appendix F to 40 CFR part 75 (scf CO_2/mmBtu).

HHV = High heat value of the fossil fuel, from fuel sampling and analysis (annual average value in Btu/lb for solid fuel, Btu/gal for liquid fuel and Btu/scf for gaseous fuel, sampled as specified (e.g., monthly, quarterly, semi-annually, or by lot) in §98.34(a)(2)). The average HHV shall be calculated according to the requirements of paragraph (a)(2)(ii) of this section.

10^6 = Conversion factor, Btu per mmBtu.

(iv) Subtract V_{ff} from V_{total} to obtain V_{bio}, the annual volume of CO_2 from the combustion of biomass. If a CEMS is being used to measure the combined combustion and process emissions from a unit that is subject to another subpart of part 98, then also subtract CO_2 process emissions from V_{total} to determine V_{bio}. The CO_2 process emissions must be calculated according to the requirements of the applicable subpart.

(v) Calculate the biogenic percentage of the annual CO_2 emissions,expressed as a decimal fraction, using Equation C–14 of this section:

$$\%\,Biogenic = \frac{V_{bio}}{V_{total}} \qquad \text{(Eq. C-14)}$$

(vi) Calculate the annual biogenic CO_2 mass emissions, in metric tons, by multiplying the results obtained from Equation C–14 of this section by the annual CO_2 mass emissions in metric tons, as determined:

(A) Under paragraph (a)(4)(vi) of this section, for units using the Tier 4 Calculation Methodology.

(B) Under paragraph (a)(5)(iii)(B) of this section, for units using the alternative calculation methodology specified in paragraph (a)(5)(iii).

(C) From the electronic data report required under § 75.64 of this chapter, for units in the Acid Rain Program and other units using CEMS to monitor and report CO_2 mass emissions according to 40 CFR part 75. However, before calculating the annual biogenic CO_2 mass emissions, multiply the cumulative annual CO_2 mass emissions by 0.91 to convert from short tons to metric tons.

(3) For a unit that combusts MSW, the annual biogenic CO_2 emissions shall be calculated using the procedures in this paragraph (e)(3).

(i) If the Tier 1 or Tier 2 Calculation Methodology is used to quantify CO_2 mass emissions:

(A) Use Equation C–1 or C–2c of this subpart, as appropriate, to calculate the annual CO_2 mass emissions from MSW combustion.

(B) Determine the relative proportions of biogenic and non-biogenic CO_2 emissions on a quarterly basis using the method specified in § 98.34(d).

(C) Determine the annual biogenic CO_2 mass emissions from MSW combustion by multiplying the annual CO_2 mass emissions by the annual average biogenic decimal fraction obtained from § 98.34(d).

(ii) If the unit uses Tier 4 to quantify CO_2 emissions:

(A) Follow the procedures in paragraphs (e)(2)(i) and (ii) of this section, to determine V_{total}.

(B) If any fossil fuel was combusted during the year, follow the procedures in paragraph (e)(2)(iii) of this section, to determine V_{ff}.

(C) Subtract V_{ff} from V_{total}, to obtain V_{MSW}, the annual volume of CO_2 emissions from MSW combustion.

(D) Determine the annual volume of biogenic CO_2 emissions (V_{bio}) from MSW combustion as follows. Multiply the annual volume of CO_2 emissions from MSW combustion (V_{MSW}) by the annual average biogenic decimal fraction obtained from ASTM D6866–08 and ASTM D7459–08.

(E) Calculate the biogenic percentage of the annual CO_2 emissions from the unit, using Equation C–14 of this section. For the purposes of this calculation, the term ''V_{bio}'' in the numerator of Equation C–14 of this section shall be the results of the calculation performed under paragraph (e)(3)(ii)(D) of this section.

(F) Calculate the annual biogenic CO_2 mass emissions according to paragraph (e)(2)(vi)(A) of this section.

(4) As an alternative to the procedures in paragraph (e)(2) of this section, use ASTM Methods D7459–08 and D6866–08 to determine the biogenic portion of the annual CO_2 emissions, as described in § 98.34(e). If this option is selected, the results of each determination shall be expressed as a decimal fraction (e.g., 0.30, if 30 percent of the CO_2 is biogenic), and the values shall be averaged over the reporting year. The annual biogenic CO_2 mass emissions shall be calculated by multiplying the the total annual CO_2 mass emissions by the annual average biogenic fraction obtained from ASTM D6866–08 and ASTM D7459–08.

(5) If Equation C–1 of this section is selected to calculate the annual biogenic mass emissions for wood, wood waste, or other solid biomass-derived fuel, Equation C–15 of this section may be used to quantify biogenic fuel consumption, provided that all of the required input parameters are accurately quantified. Similar equations and calculation methodologies based on steam generation and boiler efficiency may be used, provided that they are documented in the GHG Monitoring Plan required by § 98.3(g)(5).

$$(Fuel)_p = \frac{[H * S] - (HI)_{nb}}{2000\,(HHV)_{bio}\,(Eff)_{bio}} \qquad \text{(Eq. C-15)}$$

Where:

$(Fuel)_p$ = Quantity of biomass consumed during the measurement period ''p'' (tons/year or tons/month, as applicable).

H = Average enthalpy of the boiler steam for the measurement period (Btu/lb).

S = Total boiler steam production for the measurement period (lb/month or lb/year, as applicable).

$(HI)_{nb}$ = Heat input from co-fired fossil fuels and non-biomass-derived fuels for the measurement period, based on company records of fuel usage and default or measured HHV values (Btu/month or Btu/year, as applicable).

$(HHV)_{bio}$ = Default or measured high heat value of the biomass fuel (Btu/lb).

$(Eff)_{bio}$ = Percent efficiency of biomass-to-energy conversion, expressed as a decimal fraction.

2000 = Conversion factor (lb/ton).

§ 98.34 Monitoring and QA/QC requirements.

The CO_2 mass emissions data for stationary fuel combustion sources shall be monitored as follows:

(a) For the Tier 2 Calculation Methodology:

(1) All fuel samples shall be taken at a location in the fuel handling system that provides a sample representative of the fuel combusted. The fuel sampling and analysis may be performed by either the owner or operator or the supplier of the fuel.

(2) The minimum required frequency of the HHV sampling and analysis for each type of fuel is specified in this paragraph. When the specified frequency is based on a specified time period (i.e., weekly, monthly, quarterly, or semiannually), fuel sampling and analysis is required only for those periods in which the unit operates.

(i) For natural gas, semiannual sampling and analysis is required (i.e., twice in a calendar year, with consecutive samples taken at least four months apart).

(ii) For coal and fuel oil, analysis of at least one representative sample from each fuel lot is required. For the purposes of this section, a fuel lot is defined as a shipment or delivery of a single fuel (e.g., ship load, barge load, group of trucks, group of railroad cars, etc.).

(iii) For liquid fuels other than fuel oil, for fossil fuel-derived gaseous fuels, and for biogas; sampling and analysis is required at least once per calendar quarter. To the extent practicable, consecutive quarterly samples shall be taken at least 30 days apart.

(iv) For solid fuels other than coal and MSW, weekly sampling is required to obtain composite samples, which are then analyzed monthly.

(3) If different types of fuel (e.g., different ranks of coal or different grades of fuel oil) are blended prior to combustion, use one of the following procedures in this paragraph.

(i) Use a weighted HHV value in the emission calculations, based on the relative proportions of each fuel in the blend.

(ii) Take a representative sample of the blend and analyze it for HHV.

(4) If, for a particular type of fuel, HHV sampling and analysis is performed more often than the minimum frequency specified in paragraph (a)(2) of this section, the results of all valid fuel analyses shall be used in the GHG emission calculations.

(5) If, for a particular type of fuel, valid HHV values are obtained at less than the minimum frequency specifed in paragraph (a)(2) of this section, appropriate substitute data values shall be used in the emissions calculations, in accordance with missing data procedures of § 98.35.

(6) Use any applicable fuel sampling and analysis methods in this paragraph (a)(6) to determine the high heat values. Alternatively, for gaseous fuels, the HHV may be calculated using chromatographic analysis together with standard heating values of the fuel constituents, provided that the gas chromatograph is operated, maintained, and calibrated according to the manufacturer's instructions.

(i) ASTM D4809–06 Standard Test Method for Heat of Combustion of Liquid Hydrocarbon Fuels by Bomb Calorimeter (Precision Method) (incorporated by reference, see § 98.7).

(ii) ASTM D240–02 (Reapproved 2007) Standard Test Method for Heat of Combustion of Liquid Hydrocarbon Fuels by Bomb Calorimeter (incorporated by reference, see § 98.7).

(iii) ASTM D1826–94 (Reapproved 2003) Standard Test Method for Calorific (Heating) Value of Gases in Natural Gas Range by Continuous Recording

Calorimeter (incorporated by reference, *see* § 98.7).

(iv) ASTM D3588–98 (Reapproved 2003) Standard Practice for Calculating Heat Value, Compressibility Factor, and Relative Density of Gaseous Fuels (incorporated by reference, *see* § 98.7).

(v) ASTM D4891–89 (Reapproved 2006) Standard Test Method for Heating Value of Gases in Natural Gas Range by Stoichiometric Combustion (incorporated by reference, *see* § 98.7).

(vi) GPA Standard 2172–09 Calculation of Gross Heating Value, Relative Density, Compressibility and Theoretical Hydrocarbon Liquid Content for Natural Gas Mixtures for Custody Transfer (incorporated by reference, *see* § 98.7).

(vii) GPA Standard 2261–00, Analysis for Natural Gas and Similar Gaseous Mixtures by Gas Chromatography (incorporated by reference, *see* § 98.7).

(viii) ASTM D5865–07a, Standard Test Method for Gross Calorific Value of Coal and Coke (incorporated by reference, *see* § 98.7).

(b) For the Tier 3 Calculation Methodology:

(1) Calibrate each oil and gas flow meter according to § 98.3(i) and the provisions of this paragraph (b).

(i) Perform calibrations using any of the test methods and procedures in this paragraph (b)(1)(i):

(A) An applicable flow meter test method listed in paragraphs (b)(4)(i) through (b)(4)(viii) of this section.

(B) The calibration procedures specified by the flow meter manufacturer.

(C) An industry-accepted or industry standard calibration practice.

(ii) In addition to the initial calibration required by § 98.3(i), recalibrate each fuel flow meter (except for qualifying billing meters under paragraph (b)(1)(iii) of this section) either annually, at the minimum frequency specified by the manufacturer, or at the interval specified by the industry consensus standard practice used.

(iii) Fuel billing meters are exempted from the initial and ongoing calibration requirements of this paragraph, provided that the fuel supplier and the unit combusting the fuel do not have any common owners and are not owned by subsidiaries or affiliates of the same company.

(iv) For the initial calibration of an orifice, nozzle, or venturi meter; in-situ calibration of the transmitters is sufficient. A primary element inspection (PEI) shall be performed at least once every three years.

(v) For the continuously-operating units and processes described in § 98.3(i)(6), the required flow meter recalibrations and, if necessary, the PEIs may be postponed until the next scheduled maintenance outage.

(vi) If a mixture of fuels is transported by a common pipe (e.g., still gas and supplementary natural gas), you must either separately meter each of the fuels prior to mixing using flow meters calibrated according to § 98.3(i), or use flow meters calibrated according to § 98.3(i) to measure the mixed fuel at the common pipe and to separately meter an appropriate subset of the fuels prior to mixing. If the latter option is chosen, quantify the fuels that are not measured prior to mixing by subtracting out the fuels measured prior to mixing from the fuel measured at the common pipe.

(2) Oil tank drop measurements (if used to determine liquid fuel use volume) shall be performed according to any an appropriate method published by a consensus-based standards organization (e.g., the American Petroleum Institute).

(3) The carbon content and, if applicable, molecular weight of the fuels shall be determined according to the procedures in this paragraph (b)(3).

(i) All fuel samples shall be taken at a location in the fuel handling system that provides a sample representative of the fuel combusted. The fuel sampling and analysis may be performed by either the owner or operator or by the supplier of the fuel.

(ii) At a minimum, fuel samples shall be collected at the frequency specified in this paragraph. When sampling is required at a specified time interval (e.g., weekly, monthly, quarterly, or semiannually), fuel sampling and analysis is required for only those specified periods in which the unit operates.

(A) For natural gas, semiannual sampling and analysis is required (i.e., twice in a calendar year, with consecutive samples taken at least four months apart).

(B) For coal and fuel oil, analysis of at least one representative sample from each fuel lot is required. For the purposes of this section, a fuel lot is defined as a shipment or delivery of a single fuel (e.g., ship load, barge load, group of trucks, group of railroad cars, etc.).

(C) For other liquid fuels other than fuel oil, for fossil fuel-derived gaseous fuels, and for biogas; sampling and analysis is required at least once per calendar quarter. To the extent practicable, consecutive quarterly samples shall be taken at least 30 days apart.

(D) For solid fuels other than coal, weekly sampling is required to obtain composite samples, which are then analyzed monthly.

(E) For gaseous fuels other than natural gas and biogas (e.g., refinery gas), daily sampling and analysis to determine the carbon content and molecular weight of the fuel is required if the necessary equipment is in place to make these measurements. Otherwise, weekly sampling and analysis shall be performed.

(iii) If, for a particular type of fuel, sampling and analysis for carbon content and molecular weight is performed more often than the minimum frequency specified in paragraph (b)(3) of this section, the results of all valid fuel analyses shall be used in the GHG emission calculations.

(iv) If, for a particular type of fuel, sampling and analysis for carbon content and molecular weight is performed at less than the minimum frequency specified in paragraph (b)(3) of this section, appropriate substitute data values shall be used in the emissions calculations, in accordance with the missing data procedures of §98.35.

(v) The procedures of paragraph (a)(3) of this section apply to carbon content and molecular weight determinations.

(4) Use any applicable standard method from the following list to quality assure the data from each fuel flow meter.

(i) AGA Report No. 3, Orifice Metering of Natural Gas and Other Related Hydrocarbon Fluids, Part 1: General Equations and Uncertainty Guidelines (1990) and Part 2: Specification and Installation Requirements (2000) (incorporated by reference, *see* §98.7).

(ii) AGA Transmission Measurement Committee Report No. 7, Measurement of Gas by Turbine Meters (2006) (incorporated by reference, *see* §98.7).

(iii) ASME MFC–3M–2004 Measurement of Fluid Flow in Pipes Using Orifice, Nozzle, and Venturi (incorporated by reference, *see* §98.7).

(iv) ASME MFC–4M–1986 (Reaffirmed 1997), Measurement of Gas Flow by Turbine Meters (incorporated by reference, *see* §98.7).

(v) ASME MFC–5M–1985 (Reaffirmed 1994), Measurement of Liquid Flow in Closed Conduits Using Transit-Time Ultrasonic Flowmeters (incorporated by reference, *see* §98.7).

(vi) ASME MFC–6M–1998 Measurement of Fluid Flow in Pipes Using Vortex Flowmeters (incorporated by reference, *see* §98.7).

(vii) ASME MFC–7M–1987 (Reaffirmed 1992), Measurement of Gas Flow by Means of Critical Flow Venturi Nozzles (incorporated by reference, *see* §98.7).

(viii) ASME MFC–9M–1988 (Reaffirmed 2001), Measurement of Liquid Flow in Closed Conduits by Weighing Method (incorporated by reference, *see* §98.7).

(5) Use any applicable methods from the following list to determine the carbon content and molecular weight (for gaseous fuel) of the fuel. Alternatively, the results of chromatographic analysis of the fuel may be used, provided that the gas chromatograph is operated, maintained, and calibrated according to the manufacturer's instructions.

(i) ASTM D1945–03 Standard Test Method for Analysis of Natural Gas by Gas Chromatography (incorporated by reference, *see* §98.7).

(ii) ASTM D1946–90 (Reapproved 2006) Standard Practice for Analysis of Reformed Gas by Gas Chromatography (incorporated by reference, *see* §98.7).

(iii) ASTM D2502–04 (Reapproved 2002) Standard Test Method for Estimation of Molecular Weight (Relative Molecular Mass) of Petroleum Oils from Viscosity Measurements (incorporated by reference, *see* §98.7).

(iv) ASTM D2503–92 (Reapproved 2007) Standard Test Method for Relative Molecular Mass (Relative Molecular

Weight) of Hydrocarbons by Thermoelectric Measurement of Vapor Pressure (incorporated by reference, *see* § 98.7).

(v) ASTM D3238–95 (Reapproved 2005) Standard Test Method for Calculation of Carbon Distribution and Structural Group Analysis of Petroleum Oils by the n-d-M Method (incorporated by reference, *see* § 98.7).

(vi) ASTM D5291–02 (Reapproved 2007) Standard Test Methods for Instrumental Determination of Carbon, Hydrogen, and Nitrogen in Petroleum Products and Lubricants (incorporated by reference, *see* § 98.7).

(vii) ASTM D5373–08 Standard Test Methods for Instrumental Determination of Carbon, Hydrogen, and Nitrogen in Laboratory Samples of Coal (incorporated by reference, *see* § 98.7).

(c) For the Tier 4 Calculation Methodology, the CO_2 and flow rate monitors must be certified prior to the applicable deadline specified in § 98.33(b)(5).

(1) For initial certification, you may use any one of the following three procedures in this paragraph.

(i) § 75.20(c)(2) and (4) and appendix A to 40 CFR part 75.

(ii) The calibration drift test and relative accuracy test audit (RATA) procedures of Performance Specification 3 in appendix B to part 60 (for the CO_2 concentration monitor) and Performance Specification 6 in appendix B to part 60 (for the continuous emission rate monitoring system (CERMS)).

(iii) The provisions of an applicable State continuous monitoring program.

(2) If an O_2 concentration monitor is used to determine CO_2 concentrations, the applicable provisions of 40 CFR part 75, 40 CFR part 60, or an applicable State continuous monitoring program shall be followed for initial certification and on-going quality assurance, and all required RATAs of the monitor shall be done on a percent CO_2 basis.

(3) For ongoing quality assurance, follow the applicable procedures in either appendix B to 40 CFR part 75, appendix F to 40 CFR part 60, or an applicable State continuous monitoring program. If appendix F to 40 CFR part 60 is selected for on-going quality assurance, perform daily calibration drift assessments for both the CO_2 monitor (or surrogate O_2 monitor) and the flow rate monitor, conduct cylinder gas audits of the CO_2 concentration monitor in three of the four quarters of each year (except for non-operating quarters), and perform annual RATAs of the CO_2 concentration monitor and the CERMS.

(4) For the purposes of this part, the stack gas volumetric flow rate monitor RATAs required by appendix B to 40 CFR part 75 and the annual RATAs of the CERMS required by appendix F to 40 CFR part 60 need only be done at one operating level, representing normal load or normal process operating conditions, both for initial certification and for ongoing quality assurance.

(5) If, for any source operating hour, quality assured data are not obtained with a CO_2 monitor (or surrogate O_2 monitor), flow rate monitor, or (if applicable) moisture monitor, use appropriate substitute data values in accordance with the missing data provisions of § 98.35.

(d) When municipal solid waste (MSW) is combusted in a unit, determine the biogenic portion of the CO_2 emissions from MSW combustion using ASTM D6866–08 Standard Test Methods for Determining the Biobased Content of Solid, Liquid, and Gaseous Samples Using Radiocarbon Analysis (incorporated by reference, *see* § 98.7) and ASTM D7459–08 Standard Practice for Collection of Integrated Samples for the Speciation of Biomass (Biogenic) and Fossil-Derived Carbon Dioxide Emitted from Stationary Emissions Sources (incorporated by reference, *see* § 98.7). Perform the ASTM D7459–08 sampling and the ASTM D6866–08 analysis at least once in every calendar quarter in which MSW is combusted in the unit. Collect each gas sample during normal unit operating conditions while MSW is the only fuel being combusted for at least 24 consecutive hours or for as long as is necessary to obtain a sample large enough to meet the specifications of ASTM D6866–08. Separate CO_2 emissions into the biogenic and non-biogenic fraction using the average proportion of biogenic emissions of all samples analyzed during the reporting year. Express the results as a decimal fraction (e.g., 0.30, if 30 percent of the CO_2 from MSW combustion is

biogenic). If there is a common fuel source of MSW that feeds multiple units at the facility, performing the testing at only one of the units is sufficient.

(e) For units that use CEMS to measure the total CO_2 mass emissions and combust a combination of biogenic fuels (other than MSW) with a fossil fuel, ASTM D6866–08 and ASTM D7459–08 may be used to determine the biogenic portion of the CO_2 emissions. Perform the ASTM D7459–08 sampling and the ASTM D6866–08 analysis at least once in every calendar quarter in which biogenic and non-biogenic fuels are co-fired in the unit. The relative proportions of the biogenic and non-biogenic fuels during the sampling shall be representative of the average fuel blend for a typical operating year. Collect each gas sample using ASTM D7459–08 during normal unit operation for at least 24 consecutive hours or for as long as is necessary to obtain a sample large enough to meet the specifications of ASTM D6866–08.

(f) Whenever company records are used in the calculation of CO_2 emissions, the records required under § 98.3(g) shall include both the company records and an explanation of how those records are used to estimate the following parameters:

(1) Fuel consumption, when the Tier 1 and Tier 2 Calculation Methodologies are used.

(2) Fuel consumption, when solid fuel is combusted and the Tier 3 Calculation Methodology is used.

(3) Fossil fuel consumption when § 98.33(e) applies to a unit that uses CEMS to quantify CO_2 emissions and that combusts both fossil and biomass fuels.

(4) Sorbent usage, when § 98.33(d) applies.

(5) Quantity of steam generated by a unit when § 98.33(a)(2) applies.

(6) Biogenic fuel consumption under § 98.33(e)(5).

(g) As part of the GHG Monitoring Plan required under § 98.3(g)(5), you must document the procedures used to ensure the accuracy of the estimates of fuel usage, sorbent usage, steam production, and boiler efficiency (as applicable) in paragraph (f) of this section, including but not limited to calibration of weighing equipment, fuel flow meters, steam flow meters, and other measurement devices. The estimated accuracy of measurements made with these devices shall also be recorded, and the technical basis for these estimates shall be provided.

§ 98.35 Procedures for estimating missing data.

Whenever a quality-assured value of a required parameter is unavailable (e.g., if a CEMS malfunctions during unit operation or if a required fuel sample is not taken), a substitute data value for the missing parameter shall be used in the calculations.

(a) For all units subject to the requirements of the Acid Rain Program, and all other stationary combustion units subject to the requirements of this part that monitor and report emissions and heat input data in accordance with 40 CFR part 75, the missing data substitution procedures in 40 CFR part 75 shall be followed for CO_2 concentration, stack gas flow rate, fuel flow rate, high heating value, and fuel carbon content.

(b) For units that use the Tier 1, Tier 2, Tier 3, and Tier 4 Calculation Methodologies, perform missing data substitution as follows for each parameter:

(1) For each missing value of the high heating value, carbon content, or molecular weight of the fuel, substitute the arithmetic average of the quality-assured values of that parameter immediately preceding and immediately following the missing data incident. If the ''after'' value has not been obtained by the time that the GHG emissions report is due, you may use the ''before'' value for missing data substitution or the best available estimate of the parameter, based on all available process data (e.g., electrical load, steam production, operating hours). If, for a particular parameter, no quality-assured data are available prior to the missing data incident, the substitute data value shall be the first quality-assured value obtained after the missing data period.

(2) For missing records of CO_2 concentration, stack gas flow rate, percent moisture, fuel usage, and sorbent usage, the substitute data value shall be the best available estimate of the

parameter, based on all available process data (e.g., electrical load, steam production, operating hours, etc.). You must document and retain records of the procedures used for all such estimates.

§ 98.36 Data reporting requirements.

(a) In addition to the facility-level information required under § 98.3, the annual GHG emissions report shall contain the unit-level or process-level emissions data in paragraphs (b) through (d) of this section (as applicable) and the emissions verification data in paragraph (e) of this section.

(b) *Units that use the four tiers.* You shall report the following information for stationary combustion units that use the Tier 1, Tier 2, Tier 3, or Tier 4 methodology in § 98.33(a) to calculate CO_2 emissions, except as otherwise provided in paragraphs (c) and (d) of this section:

(1) The unit ID number.

(2) A code representing the type of unit.

(3) Maximum rated heat input capacity of the unit, in mmBtu/hr for boilers and process heaters only and relevant units of measure for other combustion sources.

(4) Each type of fuel combusted in the unit during the report year.

(5) The tier used to calculate the CO_2 emissions for each type of fuel combusted (i.e., Tier 1, 2, 3, or 4).

(6) For a unit that uses Tiers 1, 2, and 3; the CO_2, CH_4, and N_2O emissions for each type of fuel combusted, expressed in metric tons of each gas and in metric tons of CO_2e.

(7) For a unit that uses Tier 4:

(i) For units that burn fossil fuels only, the annual CO_2 emissions for all fuels combined. Reporting CO_2 emissions by type of fuel is not required.

(ii) For units that burn both fossil fuels and biomass, the annual CO_2 emissions from combustion of all fossil fuels combined and the annual CO_2 emissions from combustion of all biomass fuels combined. Reporting CO_2 emissions by type of fuel is not required.

(iii) Annual CH_4 and N_2O emissions for each type of fuel combusted expressed in metric tons of each gas and in metric tons of CO_2e.

(8) Annual CO_2 emissions from sorbent (if calculated using Equation C–11 of this subpart), expressed in metric tons.

(9) Annual GHG emissions from all fossil fuels burned in the unit (i.e., the sum of the CO_2, CH_4, and N_2O emissions), expressed in metric tons of CO_2e.

(10) Customer meter number for units that combust natural gas.

(c) *Reporting alternatives for units using the four Tiers.* You may use any of the applicable reporting alternatives of this paragraph to simplify the unit-level reporting required under paragraph (b) of this section:

(1) *Aggregation of units.* If a facility contains two or more units (e.g., boilers or combustion turbines), each of which has a maximum rated heat input capacity of 250 mmBtu/hr or less, you may report the combined GHG emissions for the group of units in lieu of reporting GHG emissions from the individual units, provided that the use of Tier 4 is not required or elected for any of the units and the units use the same tier for any common fuels combusted. If this option is selected, the following information shall be reported instead of the information in paragraph (b) of this section:

(i) Group ID number, beginning with the prefix ''GP''.

(ii) An identification number for each unit in the group.

(iii) Cumulative maximum rated heat input capacity of the group (mmBtu/hr).

(iv) The highest maximum rated heat input capacity of any unit in the group (mmBtu/hr).

(v) Each type of fuel combusted in the group of units during the reporting year.

(vi) Annual CO_2, CH_4, and N_2O mass emissions aggregated for each type of fuel combusted in the group of units during the year, expressed in metric tons of each gas and in metric tons of CO_2e. If any of the units burn both fossil fuels and biomass, report also the annual CO_2 emissions from combustion of all fossil fuels combined and annual CO_2 emissions from combustion of all biomass fuels combined, expressed in metric tons.

(vii) The tier used to calculate the CO_2 mass emissions for each type of fuel combusted in the units (i.e., Tier 1, Tier 2, or Tier 3).

(viii) The calculated CO_2 mass emissions (if any) from sorbent.

(ix) Annual GHG emissions from all fossil fuels burned in the group (i.e., the sum of the CO_2, CH_4, and N_2O emissions), expressed in metric tons of CO_2e.

(2) *Monitored common stack or duct configurations.* When the flue gases from two or more stationary combustion units at a facility are discharged through a common stack or duct before exiting to the atmosphere and if CEMS are used to continuously monitor CO_2 mass emissions at the common stack or duct according to the Tier 4 Calculation Methodology, you may report the combined emissions from the units sharing the common stack or duct, in lieu of separately reporting the GHG emissions from the individual units. The following information shall be reported instead of the information in paragraph (b) of this section:

(i) Common stack or duct identification number, beginning with the prefix ''CS''.

(ii) Identification numbers of the units sharing the common stack or duct.

(iii) Maximum rated heat input capacity of each unit sharing the common stack or duct (mmBtu/hr).

(iv) Each type of fuel combusted in the units during the year.

(v) The methodology used to calculate the CO_2 mass emissions, i.e., Tier 4.

(vi) If the any of the units burn both fossil fuels and biomass, annual CO_2 mass emissions, annual CO_2 emissions from combustion of fossil fuels, and annual CO_2 emissions from combustion of biomass measured at the common stack or duct, expressed in metric tons.

(vii) The annual CH_4 and N_2O emissions from the units sharing the common stack or duct, expressed in metric tons of each gas and in metric tons of CO_2e.

(viii) Annual GHG emissions from all fossil fuels burned in the group (i.e., the sum of the CO_2, CH_4, and N_2O emissions), expressed in metric tons of CO_2e.

(3) *Common pipe configurations.* When two or more liquid-fired or gaseous-fired stationary combustion units at a facility combust the same type of fuel and the fuel is fed to the individual units through a common supply line or pipe, you may report the combined emissions from the units served by the common supply line, in lieu of separately reporting the GHG emissions from the individual units, provided that the total amount of fuel combusted by the units is accurately measured at the common pipe or supply line using a fuel flow meter that is calibrated in accordance with §98.34(a). If a portion of the fuel measured at the common pipe is diverted to a chemical or industrial process where it is used but not combusted, you may subtract the diverted fuel from the fuel measured at the common pipe prior to performing the GHG emissions calculations, provided that the amount of fuel diverted is also measured with a calibrated flow meter per §98.3(i). If the common pipe option is selected, the applicable tier shall be used based on the maximum rated heat input capacity of the largest unit served by the common pipe configuration. The following information shall be reported instead of the information in paragraph (b) of this section:

(i) Common pipe identification number, beginning with the prefix ''CP''.

(ii) The identification numbers of the units served by the common pipe.

(iii) Maximum rated heat input capacity of each unit served by the common pipe (mmBtu/hr).

(iv) The fuels combusted in the units during the reporting year.

(v) The methodology used to calculate the CO_2 mass emissions (i.e., Tier 1, Tier 2, or Tier 3).

(vi) If the any of the units burns both fossil fuels and biomass, the annual CO_2 mass emissions from combustion of all fossil fuels and annual CO_2 emissions from combustion of all biomass fuels from the units served by the common pipe, expressed in metric tons.

(vii) Annual CH_4 and N_2O emissions from the units served by the common pipe, expressed in metric tons of each gas and in metric tons of CO_2e.

(viii) Annual GHG emissions from all fossil fuels burned in units served by

the common pipe (i.e., the sum of the CO_2, CH_4, and N_2O emissions), expressed in metric tons of CO_2e.

(d) *Units subject to 40 CFR part 75.* (1) For stationary combustion units that are either subject to the Acid Rain Program or not in the Acid Rain Program but monitor and report CO_2 mass emissions year-round according to 40 CFR part 75, you shall report the following unit-level information:

(i) Unit or stack identification numbers. Use exact same unit, common stack, or multiple stack identification numbers that represent the monitored locations (e.g., 1, 2, CS001, MS1A, etc.) that are reported under § 75.64 of this chapter.

(ii) Annual CO_2, CH_4, and N_2O emissions at each monitored location, expressed in metric tons of CO_2e.

(iii) Identification of the part 75 methodology used to determine the CO_2 mass emissions.

(2) For units that use the alternative CO_2 mass emissions calculation methods for units with continuous monitoring systems provided in § 98.33(a)(5), you shall report the following unit-level information:

(i) Unit, stack, or pipe ID numbers. Use exact same unit, common stack, or multiple stack identification numbers that represent the monitored locations (e.g., 1, 2, CS001, MS1A, etc.) that are reported under § 75.64 of this chapter.

(ii) For units that use the alternative methods specified in § 98.33(a)(5)(i) and (ii) to monitor and report heat input data year-round according to appendix D to 40 CFR part 75 or 40 CFR 75.19:

(A) Each type of fuel combusted in the unit during the reporting year.

(B) The methodology used to calculate the CO_2 mass emissions for each fuel type.

(C) A code or flag to indicate whether heat input is calculated according to appendix D to 40 CFR part 75 or 40 CFR 75.19.

(D) Annual CO_2, CH_4, and N_2O emissions at each monitored location, across all fuel types, expressed in metric tons of CO_2e.

(iii) For units with continuous monitoring systems that use the alternative method for units with continuous monitoring systems in § 98.33(a)(5)(iii) to monitor heat input year-round according to 40 CFR part 75:

(A) Fuel combusted during the reporting year.

(B) Methodology used to calculate the CO_2 mass emissions.

(C) A code or flag to indicate that the heat input data is derived from CEMS measurements.

(D) The total annual CO_2, CH_4, and N_2O emissions at each monitored location, expressed in metric tons of CO_2e.

(e) *Verification data.* You must keep on file, in a format suitable for inspection and auditing, sufficient data to verify the reported GHG emissions. This data and information must, where indicated in this paragraph (e), be included in the annual GHG emissions report.

(1) The applicable verification data specified in this paragraph (e) are not required to be kept on file or reported for units that meet any one of the three following conditions:

(i) Are subject to the Acid Rain Program.

(ii) Use the alternative methods for units with continuous monitoring systems provided in § 98.33(a)(5).

(iii) Are not in the Acid Rain Program, but are required monitor and report CO_2 mass emissions and heat input data year-round, in accordance with 40 CFR part 75.

(2) For stationary combustion sources using the Tier 1, Tier 2, Tier 3, and Tier 4 Calculation Methodologies in § 98.33(a) to quantify CO_2 emissions, the following additional information shall be kept on file and included in the GHG emissions report, where indicated:

(i) For the Tier 1 Calculation Methodology, report the total quantity of each type of fuel combusted in the unit or group of aggregated units (as applicable) during the reporting year, in short tons for solid fuels, gallons for liquid fuels and standard cubic feet for gaseous fuels.

(ii) For the Tier 2 Calculation Methodology, report:

(A) The total quantity of each type of fuel combusted in the unit or group of aggregated units (as applicable) during each month of the reporting year. Express the quantity of each fuel combusted during the measurement period

in short tons for solid fuels, gallons for liquid fuels, and scf for gaseous fuels.

(B) The frequency of the HHV determinations (e.g., once a month, once per fuel lot).

(C) The high heat values used in the CO_2 emissions calculations for each type of fuel combusted, in mmBtu per short ton for solid fuels, mmBtu per gallon for liquid fuels, and mmBtu per scf for gaseous fuels. Specify the date on which each fuel sample was taken. Indicate whether each HHV is a measured value of a substitute data value.

(D) If Equation C–2c of this subpart is used to calculate CO_2 mass emissions, report the total quantity (i.e., pounds) of steam produced from MSW or solid fuel combustion during the year, and the ratio of the maximum rate heat input capacity to the design rated steam output capacity of the unit, in mmBtu per lb of steam.

(iii) For the Tier 2 Calculation Methodology, keep records of the methods used to determine the HHV for each type of fuel combusted and the date on which each fuel sample was taken.

(iv) For the Tier 3 Calculation Methodology, report:

(A) The quantity of each type of fuel combusted in the unit or group of units (as applicable) during the year, in short tons for solid fuels, gallons for liquid fuels, and scf for gaseous fuels.

(B) The frequency of carbon content and, if applicable, molecular weight determinations for each type of fuel for the reporting year (e.g., daily, weekly, monthly, semiannually, once per fuel lot).

(C) The carbon content and, if applicable, gas molecular weight values used in the emission calculations (including both valid and substitute data values). Report all measured values if the fuel is sampled monthly or less frequently. Otherwise, for daily and weekly sampling, report monthly average values determined using the calculation procedures in Equation C–2b for each variable. Express carbon content as a decimal fraction for solid fuels, kg C per gallon for liquid fuels, and kg C per kg of fuel for gaseous fuels. Express the gas molecular weights in units of kg per kg-mole.

(D) The total number of valid carbon content determinations and, if applicable, molecular weight determinations made during the reporting year, for each fuel type.

(E) The number of substitute data values used for carbon content and, if applicable, molecular weight used in the annual GHG emissions calculations.

(v) For the Tier 3 Calculation Methodology, keep records of the following:

(A) For liquid and gaseous fuel combustion, the dates and results of the initial calibrations and periodic recalibrations of the required fuel flow meters.

(B) For fuel oil combustion, the method from §98.34(b) used to make tank drop measurements (if applicable).

(C) The methods used to determine the carbon content for each type of fuel combusted.

(D) The methods used to calibrate the fuel flow meters).

(vi) For the Tier 4 Calculation Methodology, report:

(A) The total number of source operating hours in the reporting year.

(B) The cumulative CO_2 mass emissions in each quarter of the reporting year, i.e., the sum of the hourly values calculated from Equation C–6 or C–7 of this subpart (as applicable), in metric tons.

(C) For CO_2 concentration, stack gas flow rate, and (if applicable) stack gas moisture content, the percentage of source operating hours in which a substitute data value of each parameter was used in the emissions calculations.

(vii) For the Tier 4 Calculation Methodology, keep records of:

(A) Whether the CEMS certification and quality assurance procedures of 40 CFR part 75, 40 CFR part 60, or an applicable State continuous monitoring program were used.

(B) The dates and results of the initial certification tests of the CEMS.

(C) The dates and results of the major quality assurance tests performed on the CEMS during the reporting year, i.e., linearity checks, cylinder gas audits, and relative accuracy test audits (RATAs).

(viii) If CO_2 emissions that are generated from acid gas scrubbing with sorbent injection are not captured using CEMS, report:

(A) The total amount of sorbent used during the report year, in short tons.

(B) The molecular weight of the sorbent.

(C) The ratio (''R'') in Equation C–11 of this subpart.

(ix) For units that combust both fossil fuel and biomass, when CEMS are used to quantify the annual CO_2 emissions and biogenic CO_2 is determined according to § 98.33(e)(2), you shall report the following additional information, as applicable:

(A) The annual volume of CO_2 emitted from the combustion of all fuels,*i.e.*, V_{total}, in scf.

(B) The annual volume of CO_2 emitted from the combustion of fossil fuels, *i.e.*, V_{ff}, in scf. If more than one type of fossil fuel was combusted, report the combustion volume of CO_2 for each fuel separately as well as the total.

(C) The annual volume of CO_2 emitted from the combustion of biomass,*i.e.*, V_{bio}, in scf.

(D) The carbon-based F-factor used in Equation C–13 of this subpart, for each type of fossil fuel combusted, in scf CO_2 per mmBtu.

(E) The annual average HHV value used in Equation C–13 of this subpart, for each type of fossil fuel combusted, in Btu/lb, Btu/gal, or Btu/scf, as appropriate.

(F) The total quantity of each type of fossil fuel combusted during the reporting year, in lb, gallons, or scf, as appropriate.

(G) Annual biogenic CO_2 mass emissions, in metric tons.

(x) When ASTM methods D7459–08 and D6866–08 are used to determine the biogenic portion of the annual CO_2 emissions from MSW combustion, report:

(A) The results of each quarterly sample analysis, expressed as a decimal fraction (e.g., if the biogenic fraction of the CO_2 emissions from MSW combustion is 30 percent, report 0.30).

(B) Annual combined biomass and fossil fuel CO_2 emissions from MSW combustion, in metric tons of CO_2e.

(C) The quantities V_{ff}, V_{total}, and V_{MSW} from § 98.33(e)(4)(ii), if CEMS are used to measure CO_2 emissions.

(D) The annual volume of biogenic CO_2 emissions from MSW combustion, in metric tons.

(xi) When ASTM methods D7459–08 and D6866–08 are used to determine the biogenic portion of the annual CO_2 emissions from a unit that co-fires biogenic (other than MSW) and non-biogenic fuels, you shall report the results of each quarterly sample analysis, expressed as a decimal fraction (e.g., if the biogenic fraction of the CO_2 emissions is 30 percent, report 0.30).

(3) Within 30 days of receipt of a written request from the Administrator, you shall submit explanations of the following:

(i) An explanation of how company records are used to quantify fuel consumption, if the Tier 1 or Tier 2 Calculation Methodology is used to calculate CO_2 emissions.

(ii) An explanation of how company records are used to quantify fuel consumption, if solid fuel is combusted and the Tier 3 Calculation Methodology is used to calculate CO_2 emissions.

(iii) An explanation of how sorbent usage is quantified.

(iv) An explanation of how company records are used to quantify fossil fuel consumption in units that uses CEMS to quantify CO_2 emissions and combusts both fossil fuel and biomass.

(v) An explanation of how company records are used to measure steam production, when it is used to calculate CO_2 mass emissions under § 98.33(a)(2)(iii) or to quantify solid fuel usage under § 98.33(c)(3).

(4) Within 30 days of receipt of a written request from the Administrator, you shall submit the verification data and information described in paragraphs (e)(2)(iii), (e)(2)(v), and (e)(2)(vii) of this section.

§ 98.37 Records that must be retained.

In addition to the requirements of § 98.3(g), you must retain the applicable records specified in §§ 98.34(f) and (g), 98.35(b), and 98.36(e).

§ 98.38 Definitions.

All terms used in this subpart have the same meaning given in the Clean Air Act and subpart A of this part.

TABLE C–1 TO SUBPART C OF PART 98—DEFAULT CO_2 EMISSION FACTORS AND HIGH HEAT VALUES FOR VARIOUS TYPES OF FUEL

Fuel type	Default high heat value	Default CO_2 emission factor
Coal and coke	mmBtu/short ton	kg CO_2/mmBtu
Anthracite	25.09	103.54
Bituminous	24.93	93.40
Subbituminous	17.25	97.02
Lignite	14.21	96.36
Coke	24.80	102.04
Mixed (Commercial sector)	21.39	95.26
Mixed (Industrial coking)	26.28	93.65
Mixed (Industrial sector)	22.35	93.91
Mixed (Electric Power sector)	19.73	94.38
Natural gas	mmBtu/scf	kg CO_2/mmBtu
Pipeline (Weighted U.S. Average)	1.028×10^{-3}	53.02
Petroleum products	mmBtu/gallon	kg CO_2/mmBtu
Distillate Fuel Oil No. 1	0.139	73.25
Distillate Fuel Oil No. 2	0.138	73.96
Distillate Fuel Oil No. 4	0.146	75.04
Residual Fuel Oil No. 5	0.140	72.93
Residual Fuel Oil No. 6	0.150	75.10
Still Gas	0.143	66.72
Kerosene	0.135	75.20
Liquefied petroleum gases (LPG)	0.092	62.98
Propane	0.091	61.46
Propylene	0.091	65.95
Ethane	0.096	62.64
Ethylene	0.100	67.43
Isobutane	0.097	64.91
Isobutylene	0.103	67.74
Butane	0.101	65.15
Butylene	0.103	67.73
Naphtha (<401 deg F)	0.125	68.02
Natural Gasoline	0.110	66.83
Other Oil (>401 deg F)	0.139	76.22
Pentanes Plus	0.110	70.02
Petrochemical Feedstocks	0.129	70.97
Petroleum Coke	0.143	102.41
Special Naphtha	0.125	72.34
Unfinished Oils	0.139	74.49
Heavy Gas Oils	0.148	74.92
Lubricants	0.144	74.27
Motor Gasoline	0.125	70.22
Aviation Gasoline	0.120	69.25
Kerosene-Type Jet Fuel	0.135	72.22
Asphalt and Road Oil	0.158	75.36
Crude Oil	0.138	74.49
Fossil fuel-derived fuels (solid)	mmBtu/short ton	kg CO_2/mmBtu
Municipal Solid Waste [1]	9.95	90.7
Tires	26.87	85.97
Fossil fuel-derived fuels (gaseous)	mmBtu/scf	kg CO_2/mmBtu
Blast Furnace Gas	0.092×10^{-3}	274.32
Coke Oven Gas	0.599×10^{-3}	46.85
Biomass fuels—solid	mmBtu/short ton	kg CO_2/mmBtu
Wood and Wood Residuals	15.38	93.80
Agricultural Byproducts	8.25	118.17
Peat	8.00	111.84
Solid Byproducts	25.83	105.51
Biomass fuels—gaseous	mmBtu/scf	kg CO_2/mmBtu
Biogas (Captured methane)	0.841×10^{-3}	52.07

TABLE C–1 TO SUBPART C OF PART 98—DEFAULT CO_2 EMISSION FACTORS AND HIGH HEAT VALUES FOR VARIOUS TYPES OF FUEL—Continued

Fuel type	Default high heat value	Default CO_2 emission factor
Biomass Fuels—Liquid	mmBtu/gallon	kg CO_2/mmBtu
Ethanol (100%)	0.084	68.44
Biodiesel (100%)	0.128	73.84
Rendered Animal Fat	0.125	71.06
Vegetable Oil	0.120	81.55

[1] Allowed only for units that do not generate steam and use Tier 1.

TABLE C–2 TO SUBPART C OF PART 98—DEFAULT CH_4 AND N_2O EMISSION FACTORS FOR VARIOUS TYPES OF FUEL

Fuel type	Default CH_4 emission factor (kg CH_4/mmBtu)	Default N_2O emission factor (kg N_2O/mmBtu)
Coal and Coke (All fuel types in Table C–1)	1.1×10^{-2}	1.6×10^{-03}
Natural Gas	1.0×10^{-03}	1.0×10^{-04}
Petroleum (All fuel types in Table C–1)	3.0×10^{-03}	6.0×10^{-04}
Municipal Solid Waste	3.2×10^{-02}	4.2×10^{-03}
Tires	3.2×10^{-02}	4.2×10^{-03}
Blast Furnace Gas	2.2×10^{-05}	1.0×10^{-04}
Coke Oven Gas	4.8×10^{-04}	1.0×10^{-04}
Biomass Fuels—Solid (All fuel types in Table C–1)	3.2×10^{-02}	4.2×10^{-03}
Biogas	3.2×10^{-03}	6.3×10^{-04}
Biomass Fuels—Liquid (All fuel types in Table C–1)	1.1×10^{-03}	1.1×10^{-04}

Note: Those employing this table are assumed to fall under the IPCC definitions of the "Energy Industry" or "Manufacturing Industries and Construction". In all fuels except for coal the values for these two categories are identical. For coal combustion, those who fall within the IPCC "Energy Industry" category may employ a value of 1g of CH_4/MMBtu.

[1] Allowed only for units that do not generate steam and use Tier 1.

TABLE C–2 TO SUBPART C TO PART 98—DEFAULT CH_4 AND N_2O EMISSION FACTORS FOR VARIOUS TYPES OF FUEL

Fuel type	Default CH_4 emission factor (kg CH_4/mmBtu)	Default N_2O emission factor (kg N_2O/mmBtu)
Coal and Coke (All fuel types in Table C–1)	1.1×10^{-2}	1.6×10^{-03}
Natural Gas	1.0×10^{-03}	1.0×10^{-04}
Petroleum (All fuel types in Table C–1)	3.0×10^{-03}	6.0×10^{-04}
Municipal Solid Waste	3.2×10^{-02}	4.2×10^{-03}
Tires	3.2×10^{-02}	4.2×10^{-03}
Blast Furnace Gas	2.2×10^{-05}	1.0×10^{-04}
Coke Oven Gas	4.8×10^{-04}	1.0×10^{-04}
Biomass Fuels—Solid (All fuel types in Table C–1)	3.2×10^{-02}	4.2×10^{-03}
Biogas	3.2×10^{-03}	6.3×10^{-04}
Biomass Fuels—Liquid (All fuel types in Table C–1)	1.1×10^{-03}	1.1×10^{-04}

Note: Those employing this table are assumed to fall under the IPCC definitions of the "Energy Industry" or "Manufacturing Industries and Construction". In all fuels except for coal the values for these two categories are identical. For coal combustion, those who fall within the IPCC "Energy Industry" category may employ a value of 1 g of CH_4/MMBtu.

Editorial Note: At 74FR56374, Oct. 30, 2009, part 98 was added. The added part included two tables identified as C–2 to Subpart C.

Subpart D—Electricity Generation

§ 98.40 Definition of the source category.

(a) The electricity generation source category comprises electricity generating units that are subject to the requirements of the Acid Rain Program and any other electricity generating units that are required to monitor and report to EPA CO_2 emissions year-round according to 40 CFR part 75.

(b) This source category does not include portable equipment, emergency equipment, or emergency generators, as defined in § 98.6.

§ 98.41 Reporting threshold.

You must report GHG emissions under this subpart if your facility contains one or more electricity generating units and the facility meets the requirements of § 98.2(a)(1).

§ 98.42 GHGs to report.

(a) For each electricity generating unit that is subject to the requirements of the Acid Rain Program or is otherwise required to monitor and report to EPA CO_2 emissions year-round according to 40 CFR part 75, you must report under this subpart the annual mass emissions of CO_2, N_2O, and CH_4 by following the requirements of this subpart.

(b) For each electricity generating unit that is not subject to the Acid Rain Program or otherwise required to monitor and report to EPA CO_2 emissions year-round according to 40 CFR part 75, you must report under subpart C of this part (General Stationary Fuel Combustion Sources) the emissions of CO_2, CH_4, and N_2O by following the requirements of subpart C.

(c) For each stationary fuel combustion unit that does not generate electricity, you must report under subpart C of this part (General Stationary Fuel Combustion Sources) the emissions of CO_2, CH_4, and N_2O by following the requirements of subpart C of this part.

§ 98.43 Calculating GHG emissions.

Continue to monitor and report CO_2 mass emissions as required under § 75.13 or section 2.3 of apppendix G to 40 CFR part 75, and § 75.64. Calculate CO_2, CH_4, and N_2O emissions as follows:

(a) Convert the cumulative annual CO_2 mass emissions reported in the fourth quarter electronic data report required under § 75.64 from units of short tons to metric tons. To convert tons to metric tons, divide by 1.1023.

(b) Calculate and report annual CH_4 and N_2O mass emissions under this subpart by following the applicable method specified in § 98.33(c).

§ 98.44 Monitoring and QA/QC requirements.

Follow the applicable quality assurance procedures for CO_2 emissions in appendices B, D, and G to 40 CFR part 75.

§ 98.45 Procedures for estimating missing data.

Follow the applicable missing data substitution procedures in 40 CFR part 75 for CO_2 concentration, stack gas flow rate, fuel flow rate, high heating value, and fuel carbon content.

§ 98.46 Data reporting requirements.

The annual report shall comply with the data reporting requirements specified in § 98.36(b) and, if applicable, § 98.36(c)(2) or (c)(3).

§ 98.47 Records that must be retained.

You shall comply with the recordkeeping requirements of §§ 98.3(g) and 98.37.

§ 98.48 Definitions.

All terms used in this subpart have the same meaning given in the Clean Air Act and subpart A of this part.

Subpart E—Adipic Acid Production

§ 98.50 Definition of source category.

The adipic acid production source category consists of all adipic acid production facilities that use oxidation to produce adipic acid.

§ 98.51 Reporting threshold.

You must report GHG emissions under this subpart if your facility contains an adipic acid production process and the facility meets the requirements of either § 98.2(a)(1) or (2).

§ 98.52 GHGs to report.

(a) You must report N_2O process emissions at the facility level.

(b) You must report under subpart C of this part (General Stationary Fuel Combustion Sources) the emissions of CO_2, CH_4, and N_2O from each stationary combustion unit following the requirements of subpart C.

§ 98.53 Calculating GHG emissions.

(a) You must determine annual N_2O emissions from adipic acid production according to paragraphs (a)(1) or (a)(2) of this section.

(1) Use a site-specific emission factor and production data according to paragraphs (b) through (h) of this section.

(2) Request Administrator approval for an alternative method of determining N_2O emissions according to paragraphs (a)(2)(i) and (a)(2)(ii) of this section.

(i) You must submit the request within 45 days following promulgation of this subpart or within the first 30 days of each subsequent reporting year.

(ii) If the Administrator does not approve your requested alternative method within 150 days of the end of the reporting year, you must determine the N_2O emissions factor for the current reporting period using the procedures specified in paragraphs (b) through (h) of this section.

(b) You must conduct an annual performance test according to paragraphs (b)(1) through (b)(3) of this section.

(1) You must conduct the test on the waste gas stream from the nitric acid oxidation step of the process using the methods specified in § 98.54(b) through (d).

(2) You must conduct the performance test under normal process operating conditions and without using N_2O abatement technology.

(3) You must measure the adipic acid production rate during the test and calculate the production rate for the test period in metric tons per hour.

(c) You must determine an N_2O emissions factor to use in Equation E–2 of this section according to paragraphs (c)(1) or (c)(2) of this section.

(1) You may request Administrator approval for an alternative method of determining N_2O concentration according to the procedures in paragraphs (a)(2)(i) and (a)(2)(ii) of this section. Alternative methods include the use of N_2O CEMs.

(2) Using the results of the performance test in paragraph (b) of this section, you must calculate a facility-specific emissions factor according to Equation E–1 of this section:

$$EF_{N2O} = \frac{\sum_{1}^{n} \frac{C_{N2O} * 1.14 \times 10^{-7} * Q}{P}}{n} \qquad \text{(Eq. E-1)}$$

Where:

EF_{N2O} = Average facility-specific N_2O emissions factor (lb N_2O generated/ton adipic acid produced).

C_{N2O} = N_2O concentration per text run during the performance test (ppm N_2O).

1.14×10^{-7} = Conversion factor (lb/dscf-ppm N_2O).

Q = Volumetric flow rate of effluent gas per test run during the performance test (dscf/hr).

P = Production rate per test run during the performance test (tons adipic acid produced/hr).

n = Number of test runs.

(d) If applicable, you must determine the destruction efficiency for each N_2O abatement technology used at your facility according to paragraphs (d)(1), (d)(2), or (d)(3) of this section.

(1) Use the manufacturer's specified destruction efficiency.

(2) Estimate the destruction efficiency through process knowledge. Examples of information that could constitute process knowledge include calculations based on material balances, process stoichiometry, or previous test results provided the results are still relevant to the current vent stream conditions. You must document how process knowledge was used to determine the destruction efficiency.

(3) Calculate the destruction efficiency by conducting an additional performance test on the emissions stream following the N_2O abatement technology.

(e) If applicable, you must determine the abatement factor for each N_2O abatement technology used at your facility. The abatement factor is calculated for each adipic acid facility according to Equation E–2 of this section.

$$AF_N = \frac{P_{a\ Abate}}{P_a} \qquad \text{(Eq. E-2)}$$

Where:

AF_N = Abatement factor of N_2O abatement technology (fraction of annual production that abatement technology is operating).
$P_{a\ Abate}$ = Annual adipic acid production during which N_2O abatement was used.
P_a = Total annual adipic acid production (ton acid produced).

(f) You must determine the annual amount of adipic acid produced and the annual adipic acid production during which N_2O abatement is operating.

(g) You must calculate annual adipic acid production process emissions of N_2O by multiplying the emissions factor (determined using Equation E–1 of this section) by the total annual adipic acid production and accounting for N_2O abatement, according to Equation E–3 of this section:

$$N_2O = \sum_{1}^{N} \frac{EF_{N2O} * P_a * \left(1 - \left(DF_N * AF_N\right)\right)}{2205} \qquad \text{(Eq. E-3)}$$

Where:
N_2O = Annual N_2O mass emissions from adipic acid production (metric tons).
EF_{N2O} = Facility-specific N_2O emissions factor (lb N_2O generated/ton adipic acid produced).
P_a = Annual adipic acid produced (tons).
DF_N = Destruction efficiency of N_2O abatement technology N (abatement device destruction efficiency, percent of N_2O removed from air stream).
AF_N = Abatement factor of N_2O abatement technology N (fraction of annual production abatement technology is operating).
2205 = Conversion factor (lb/metric ton).
N = Number of different N_2O abatement technologies.

(h) You must determine the amount of process N_2O emissions that is sold or transferred off site (if applicable). You can determine the amount using existing process flow meters and N_2O analyzers.

§98.54 Monitoring and QA/QC requirements.

(a) You must conduct a new performance test and calculate a new facility-specific emissions factor according to the frequency specified in paragraphs (a)(1) through (a)(3) of this section.

(1) Conduct the performance test annually.

(2) Conduct the performance test when your adipic acid production process is changed either by altering the ratio of cyclohexanone to cyclohexanol or by installing abatement equipment.

(3) If you requested Administrator approval for an alternative method of determining N_2O concentration under §98.53(a)(2), you must conduct the performance test if your request has not been approved by the Administrator within 150 days of the end of the reporting year in which it was submitted.

(b) You must measure the N_2O concentration during the performance test using one of the methods in paragraphs (b)(1) through (b)(3) of this section.

(1) EPA Method 320, Measurement of Vapor Phase Organic and Inorganic Emissions by Extractive Fourier Transform Infrared (FTIR) Spectroscopy in 40 CFR part 63, appendix A;

(2) ASTM D6348–03 Standard Test Method for Determination of Gaseous Compounds by Extractive Direct Interface Fourier Transform Infrared (FTIR) Spectroscopy (incorporated by reference, *see* §98.7); or

(3) An equivalent method, with Administrator approval.

(c) You must determine the production rate(s) during the performance test according to paragraph (c)(1) or (c)(2) of this section.

(1) Direct measurement (such as using flow meters or weigh scales).

(2) Existing plant procedures used for accounting purposes.

(d) You must conduct all required performance tests according to the methods in §98.54(b) in conjunction with the applicable EPA methods in 40 CFR part 60, appendices A–1 through A–4. Conduct three emissions test runs of 1 hour each. All QA/QC procedures specified in the reference test methods and any associated performance specifications apply. For each test, the facility must prepare an emissions factor

determination report that must include the items in paragraphs (d)(1) through (d)(3) of this section:

(1) Analysis of samples, determination of emissions, and raw data.

(2) All information and data used to derive the emissions factor.

(3) The production rate(s) during the performance test and how each production rate was determined.

(e) You must determine the monthly adipic acid production quantity and the monthly adipic acid production during which N_2O abatement technology is operating according to the methods in paragraphs (c)(1) or (c)(2) of this section.

(f) You must determine the annual adipic acid production quantity and the annual adipic production quantity during which N_2O abatement technology is operating by summing the respective monthly adipic acid production quantities.

§ 98.55 Procedures for estimating missing data.

A complete record of all measured parameters used in the GHG emissions calculations is required. Therefore, whenever a quality-assured value of a required parameter is unavailable, a substitute data value for the missing parameter shall be used in the calculations as specified in paragraphs (a) and (b) of this section.

(a) For each missing value of monthly adipic acid production, the substitute data shall be the best available estimate based on all available process data or data used for accounting purposes (such as sales records).

(b) For missing values related to the performance test, including emission factors, production rate, and N_2O concentration, you must conduct a new performance test according to the procedures in § 98.54 (a) through (d).

§ 98.56 Data reporting requirements.

In addition to the information required by § 98.3(c), each annual report must contain the information specified in paragraphs (a) through (k) of this section at the facility level:

(a) Annual process N_2O emissions from adipic acid production (metric tons).

(b) Annual adipic acid production (tons).

(c) Annual adipic acid production during which N_2O abatement technology is operating (tons).

(d) Annual process N_2O emissions from adipic acid production facility that is sold or transferred off site (metric tons).

(e) Number of abatement technologies (if applicable).

(f) Types of abatement technologies used (if applicable).

(g) Abatement technology destruction efficiency for each abatement technology (percent destruction).

(h) Abatement utilization factor for each abatement technology (fraction of annual production that abatement technology is operating).

(i) Number of times in the reporting year that missing data procedures were followed to measure adipic acid production (months).

(j) If you conducted a performance test and calculated a site-specific emissions factor according to § 98.53(a)(1), each annual report must also contain the information specified in paragraphs (j)(1) through (j)(7) of this section for each adipic acid production facility.

(1) Emissions factor (lb N_2O/ton adipic acid).

(2) Test method used for performance test.

(3) Production rate per test run during performance test (tons/hr).

(4) N_2O concentration per test run during performance test (ppm N_2O).

(5) Volumetric flow rate per test run during performance test (dscf/hr).

(6) Number of test runs.

(7) Number of times in the reporting year that a performance test had to be repeated (number).

(k) If you requested Administrator approval for an alternative method of determining N_2O concentration under § 98.53(a)(2), each annual report must also contain the information specified in paragraphs (k)(1) through (k)(4) of this section for each adipic acid production facility.

(1) Name of alternative method.

(2) Description of alternative method.

(3) Request date.

(4) Approval date.

§98.57 Records that must be retained.

In addition to the information required by §98.3(g), you must retain the records specified in paragraphs (a) through (h) of this section at the facility level:

(a) Annual adipic acid production capacity (tons).

(b) Records of significant changes to process.

(c) Number of facility operating hours in calendar year.

(d) Documentation of how accounting procedures were used to estimate production rate.

(e) Documentation of how process knowledge was used to estimate abatement technology destruction efficiency.

(f) Performance test reports of N_2O emissions.

(g) Measurements, records and calculations used to determine reported parameters.

(h) Documentation of the procedures used to ensure the accuracy of the measurements of all reported parameters, including but not limited to, calibration of weighing equipment, flow meters, and other measurement devices. The estimated accuracy of measurements made with these devices must also be recorded, and the technical basis for these estimates must be provided.

§98.58 Definitions.

All terms used in this subpart have the same meaning given in the Clean Air Act and subpart A of this part.

Subpart F—Aluminum Production

§98.60 Definition of the source category.

(a) A primary aluminum production facility manufactures primary aluminum using the Hall-Héroult manufacturing process. The primary aluminum manufacturing process comprises the following operations:

(1) Electrolysis in prebake and Sderberg cells.

(2) Anode baking for prebake cells.

(b) This source category does not include experimental cells or research and development process units.

§98.61 Reporting threshold.

You must report GHG emissions under this subpart if your facility contains an aluminum production process and the facility meets the requirements of either §98.2(a)(1) or (a)(2).

§98.62 GHGs to report.

You must report:

(a) Perfluoromethane (CF_4), and perfluoroethane (C_2F_6) emissions from anode effects in all prebake and Sderberg electolysis cells.

(b) CO_2 emissions from anode consumption during electrolysis in all prebake and Sderberg electolysis cells.

(c) CO_2 emissions from on-site anode baking.

(d) You must report under subpart C of this part (General Stationary Fuel Combustion Sources) the emissions of CO_2, N_2O, and CH_4 emissions from each stationary fuel combustion unit by following the requirements of subpart C.

§98.63 Calculating GHG emissions.

(a) The annual value for PFC emissions shall be estimated from the sum of monthly values using Equation F–1 of this section:

$$E_{PFC} = \sum_{m=1}^{m=12} E_m \qquad \text{(Eq. F-1)}$$

Where:

E_{PFC} = Annual PFC emissions from aluminum production (metric tons PFC).

E_m = PFC emissions from aluminum production for the month ''m'' (metric tons PFC).

(b) Use Equation F–2 of this section to estimate CF_4 emissions from anode effect duration or Equation F–3 of this section to estimate CF_4 emissions from overvoltage, and use Equation F–4 of this section to estimate C_2F_6 emissions from anode effects from each prebake and Sderberg electolysis cell.

$$E_{CF4} = S_{CF4} \times AEM \times MP \times 0.001 \qquad \text{(Eq. F-2)}$$

Where:

E_{CF4} = Monthly CF_4 emissions from aluminum production (metric tons CF_4).

S_{CF4} = The slope coefficient ((kg CF_4/metric ton Al)/(AE-Mins/cell-day)).

AEM = The anode effect minutes per cell-day (AE-Mins/cell-day).

MP = Metal production (metric tons Al), where AEM and MP are calculated monthly.

$$E_{CF4} = EF_{CF4} \times MP \times 0.001 \qquad \text{(Eq. F-3)}$$

Where:

E_{CF4} = Monthly CF_4 emissions from aluminum production (metric tons CF_4).

EF_{CF4} = The overvoltage emission factor (kg CF_4/metric ton Al).

MP = Metal production (metric tons Al), where MP is calculated monthly.

$$E_{C2F6} = E_{CF4} \times F_{C2F6/CF4} \times 0.001 \qquad \text{(Eq. F-4)}$$

Where:

E_{C2F6} = Monthly C_2F_6 emissions from aluminum production (metric tons C_2F_6).

E_{CF4} = CF_4 emissions from aluminum production (kg CF_4).

$F_{C2F6/CF4}$ = The weight fraction of C_2F_6/CF_4 (kg C_2F_6/kg CF_4).

0.001 = Conversion factor from kg to metric tons, where E_{CF4} is calculated monthly.

(c) You must calculate and report the annual process CO_2 emissions from anode consumption during electrolysis and anode baking of prebake cells using either the procedures in paragraph (d) of this section or the procedures in paragraphs (e) and (f) of this section.

(d) Calculate and report under this subpart the process CO_2 emissions by operating and maintaining CEMS according to the Tier 4 Calculation Methodology in § 98.33(a)(4) and all associated requirements for Tier 4 in subpart C of this part (General Stationary Fuel Combustion Sources).

(e) Use the following procedures to calculate CO_2 emissions from anode consumption during electrolysis:

(1) For Prebake cells: you must calculate CO_2 emissions from anode consumption using Equation F–5 of this section:

$$E_{CO2} = NAC \times MP \times \left(\left[100 - S_a - Ash_a\right]/100\right) \times (44/12) \qquad \text{(Eq. F-5)}$$

Where:

E_{CO2} = Annual CO_2 emissions from prebaked anode consumption (metric tons CO_2).

NAC = Net annual prebaked anode consumption per metric ton Al (metric tons C/metric tons Al).

MP = Annual metal production (metric tons Al).

S_a = Sulfur content in baked anode (percent weight).

Ash_a = Ash content in baked anode (percent weight).

44/12 = Ratio of molecular weights, CO_2 to carbon.

(2) For Sderberg cells you must calculate CO_2 emissions using Equation F–6 of this section:

$$E_{CO2} = (PC \times MP - [CSM \times MP]/1000 - BC/100 \times PC \times MP \times [S_p + Ash_p + H_p]/100 - [100 - BC]/100 \times PC \times MP \times [S_c + Ash_c]/100 - MP \times CD) \times (44/12) \quad \text{(Eq. F-6)}$$

Where:

E_{CO2} = Annual CO_2 emissions from paste consumption (metric ton CO_2).
PC = Annual paste consumption (metric ton/metric ton Al).
MP = Annual metal production (metric ton Al).
CSM = Annual emissions of cyclohexane soluble matter (kg/metric ton Al).
BC = Binder content of paste (percent weight).
S_p = Sulfur content of pitch (percent weight).
Ash_p = Ash content of pitch (percent weight).
H_p = Hydrogen content of pitch (percent weight).
S_c = Sulfur content in calcined coke (percent weight).
Ash_c = Ash content in calcined coke (percent weight).
CD = Carbon in skimmed dust from Sderberg cells (metric ton C/metric ton Al).
44/12 = Ratio of molecular weights, CO_2 to carbon.

(f) Use the following procedures to calculate CO_2 emissions from anode baking of prebake cells:

(1) Use Equation F–7 of this section to calculate emissions from pitch volatiles combustion.

$$E_{CO2PV} = (GA - H_w - BA - WT) \times (44/12) \quad \text{(Eq. F-7)}$$

Where:

E_{CO2PV} = Annual CO_2 emissions from pitch volatiles combustion (metric tons CO_2).
GA = Initial weight of green anodes (metric tons).
H_w = Annual hydrogen content in green anodes (metric tons).
BA = Annual baked anode production (metric tons).
WT = Annual waste tar collected (metric tons).
44/12 = Ratio of molecular weights, CO_2 to carbon.

(2) Use Equation F–8 of this section to calculate emissions from bake furnace packing material.

$$E_{CO2PC} = PCC \times BA \times \left(\left[100 - S_{pc} - Ash_{pc}\right]/100\right) \times (44/12) \quad \text{(Eq. F-8)}$$

Where:

E_{CO2PC} = Annual CO_2 emissions from bake furnace packing material (metric tons CO_2).
PCC = Annual packing coke consumption (metric tons/metric ton baked anode).
BA = Annual baked anode production (metric tons).
S_{pc} = Sulfur content in packing coke (percent weight).
Ash_{pc} = Ash content in packing coke (percent weight).
44/12 = Ratio of molecular weights, CO_2 to carbon.

(g) If process CO_2 emissions from anode consumption during electrolysis or anode baking of prebake cells are vented through the same stack as any combustion unit or process equipment that reports CO_2 emissions using a CEMS that complies with the Tier 4 Calculation Methodology in subpart C of this part (General Stationary Fuel Combustion Sources), then the calculation methodology in paragraphs (d) and (e) of this section shall not be used to calculate those process emissions. The owner or operation shall report under this subpart the combined stack emissions according to the Tier 4 Calculation Methodology in §98.33(a)(4) and all

associated requirements for Tier 4 in subpart C of this part (General Stationary Fuel Combustion Sources).

§ 98.64 Monitoring and QA/QC requirements.

(a) Effective one year after publication of the rule for smelters with no prior measurement or effective three years after publication for facilities with historic measurements, the smelter-specific slope coefficients used in Equations F–2, F–3, and F–4 of this subpart must be measured in accordance with the recommendations of the EPA/IAI Protocol for Measurement of Tetrafluoromethane (CF_4) and Hexafluoroethane (C_2F_6) Emissions from Primary Aluminum Production (2008), except the minimum frequency of measurement shall be every 10 years unless a change occurs in the control algorithm that affects the mix of types of anode effects or the nature of the anode effect termination routine. Facilities which operate at less than 0.2 anode effect minutes per cell day or operate with less than 1.4mV anode effect overvoltage can use either smelter-specific slope coefficients or the technology specific default values in Table F–1 of this subpart.

(b) The minimum frequency of the measurement and analysis is annually except as follows: Monthly—anode effect minutes per cell day (or anode effect overvoltage and current efficiency), production.

(c) Sources may use either smelter-specific values from annual measurements of parameters needed to complete the equations in § 98.63 (e.g., sulfur, ash, and hydrogen contents) or the default values shown in Table F–2 of this subpart.

§ 98.65 Procedures for estimating missing data.

A complete record of all measured parameters used in the GHG emissions calculations is required. Therefore, whenever a quality-assured value of a required parameter is unavailable (e.g., if a meter malfunctions during unit operation or if a required sample measurement is not taken), a substitute data value for the missing parameter shall be used in the calculations, according to the following requirements:

(a) Where anode or paste consumption data are missing, CO_2 emissions can be estimated from aluminum production using Tier 1 method per Equation F–8 of this section.

$$ECO_2 = EF_p \times MP_p + EF_s \times MP_s \qquad \text{(Eq. F-8)}$$

Where:

ECO_2 = CO_2 emissions from anode and/or paste consumption, metric tons CO_2.

EF_p = Prebake technology specific emission factor (1.6 metric tons CO_2/metric ton aluminum produced).

MP_p = Metal production from prebake process (metric tons Al).

EF_s = Sderberg technology specific emission factor (1.7 metric tons CO_2/metric ton Al produced).

MP_s = Metal production from Sderberg process (metric tons Al).

(b) For other parameters, use the average of the two most recent data points after the missing data.

§ 98.66 Data reporting requirements.

In addition to the information required by § 98.3(c), you must report the following information at the facility level:

(a) Annual aluminum production in metric tons.

(b) Type of smelter technology used.

(c) The following PFC-specific information on an annual basis:

(1) Perfluoromethane emissions and perfluoroethane emissions from anode effects in all prebake and all Sderberg electolysis cells combined.

(2) Anode effect minutes per cell-day (AE-mins/cell-day), anode effect frequency (AE/cell-day), anode effect duration (minutes). (Or anode effect overvoltage factor ((kg CF_4/metric ton Al)/(mV/cell day)), potline overvoltage (mV/cell day), current efficiency (%).)

(3) Smelter-specific slope coefficients (or overvoltage emission factors) and

the last date when the smelter-specific-slope coefficients (or overvoltage emission factors) were measured.

(d) Method used to measure the frequency and duration of anode effects (or overvoltage).

(e) The following CO_2-specific information for prebake cells:

(1) Annual anode consumption.

(2) Annual CO_2 emissions from the smelter.

(f) The following CO_2-specific information for Sderberg cells:

(1) Annual paste consumption.

(2) Annual CO_2 emissions from the smelter.

(g) Smelter-specific inputs to the CO_2 process equations (e.g., levels of sulfur and ash) that were used in the calculation, on an annual basis.

(h) Exact data elements required will vary depending on smelter technology (e.g., point-feed prebake or Sderberg) and process control technology (e.g., Pechiney or other).

§ 98.67 Records that must be retained.

In addition to the information required by § 98.3(g), you must retain the following records:

(a) Monthly aluminum production in metric tons.

(b) Type of smelter technology used.

(c) The following PFC-specific information on a monthly basis:

(1) Perfluoromethane and perfluoroethane emissions from anode effects in prebake and Sderberg electolysis cells.

(2) Anode effect minutes per cell-day (AE-mins/cell-day), anode effect frequency (AE/cell-day), anode effect duration (minutes). (Or anode effect overvoltage factor ((kg CF_4/metric ton Al)/(mV/cell day)), potline overvoltage (mV/cell day), current efficiency (%).))

(3) Smelter-specific slope coefficients and the last date when the smelter-specific-slope coefficients were measured.

(d) Method used to measure the frequency and duration of anode effects (or to measure anode effect overvoltage and current efficiency).

(e) The following CO_2-specific information for prebake cells:

(1) Annual anode consumption.

(2) Annual CO_2 emissions from the smelter.

(f) The following CO_2-specific information for Sderberg cells:

(1) Annual paste consumption.

(2) Annual CO_2 emissions from the smelter.

(g) Smelter-specific inputs to the CO_2 process equations (e.g., levels of sulfur and ash) that were used in the calculation, on an annual basis.

(h) Exact data elements required will vary depending on smelter technology (e.g., point-feed prebake or Sderberg) and process control technology (e.g., Pechiney or other).

§ 98.68 Definitions.

All terms used in this subpart have the same meaning given in the Clean Air Act and subpart A of this part.

TABLE F–1 TO SUBPART F OF PART 98—SLOPE AND OVERVOLTAGE COEFFICIENTS FOR THE CALCULATION OF PFC EMISSIONS FROM ALUMINUM PRODUCTION

Technology	CF_4 slope coefficient [(kg CF_4/metric ton Al)/(AE-Mins/cell-day)]	CF_4 overvoltage coefficient [(kg CF_4/metric ton Al)/(mV)]	Weight fraction C_2F_6/CF_4 [(kg C_2F_6/kg CF_4)]
CWPB	0.143	1.16	0.121
SWPB	0.272	3.65	0.252
VSS	0.092	NA	0.053
HSS	0.099	NA	0.085

TABLE F–2 TO SUBPART F OF PART 98—DEFAULT DATA SOURCES FOR PARAMETERS USED FOR CO_2 EMISSIONS

Parameter	Data source
CO_2 Emissions from Prebake Cells (CWPB and SWPB)	
MP: metal production (metric tons Al)	Individual facility records.
NAC: net annual prebaked anode consumption per metric ton Al (metric tons C/metric tons Al).	Individual facility records.
S_a: sulfur content in baked anode (percent weight)	2.0.
Ash_a: ash content in baked anode (percent weight)	0.4.
CO_2 Emissions from Sderberg Cells (VSS and HSS)	
MP: metal production (metric tons Al)	Individual facility records.
PC: annual paste consumption (metric ton/metric ton Al)	Individual facility records.
CSM: annual emissions of cyclohexane soluble matter (kg/metric ton Al)	HSS: 4.0. VSS: 0.5.
BC: binder content of paste (percent weight)	Dry Paste: 24. Wet Paste: 27.
S_p: sulfur content of pitch (percent weight)	0.6.
Ash_p: ash content of pitch (percent weight)	0.2.
H_p: hydrogen content of pitch (percent weight)	3.3.
S_c: sulfur content in calcined coke (percent weight)	1.9.
Ash_c: ash content in calcined coke (percent weight)	0.2.
CD: carbon in skimmed dust from Sderberg cells (metric ton C/metric ton Al)	0.01.
CO_2 Emissions from Pitch Volatiles Combustion (VSS and HSS)	
GA: initial weight of green anodes (metric tons)	Individual facility records.
H_w: annual hydrogen content in green anodes (metric tons)	0.005 × GA.
BA: annual baked anode production (metric tons)	Individual facility records.
WT: annual waste tar collected (metric tons)	(a) 0.005 × GA.
(a) Riedhammer furnaces	(b) insignificant.
(b) all other furnaces.	
CO_2 Emissions From Bake Furnace Packing Materials (CWPB and SWPB)	
PCC: annual packing coke consumption (metric tons/metric ton baked anode)	0.015.
BA: annual baked anode production (metric tons)	Individual facility records.
S_{pc}: sulfur content in packing coke (percent weight)	2.
Ash_{pc}: ash content in packing coke (percent weight)	2.5.

Subpart G—Ammonia Manufacturing

§ 98.70 Definition of source category.

The ammonia manufacturing source category comprises the process units listed in paragraphs (a) and (b) of this section.

(a) Ammonia manufacturing processes in which ammonia is manufactured from a fossil-based feedstock produced via steam reforming of a hydrocarbon.

(b) Ammonia manufacturing processes in which ammonia is manufactured through the gasification of solid and liquid raw material.

§ 98.71 Reporting threshold.

You must report GHG emissions under this subpart if your facility contains an ammonia manufacturing process and the facility meets the requirements of either § 98.2(a)(1) or (2).

§ 98.72 GHGs to report.

You must report:

(a) CO_2 process emissions from steam reforming of a hydrocarbon or the gasification of solid and liquid raw material, reported for each ammonia manufacturing process unit following the requirements in this subpart.

(b) CO_2, CH_4, and N_2O emissions from each stationary fuel combustion unit. You must report these emissions under subpart C of this part (General Stationary Fuel Combustion Sources), by following the requirements of subpart C.

(c) CO_2 emissions collected and transferred off site under subpart PP of this part (Suppliers of CO_2), following the requirements of subpart PP.

§98.73 Calculating GHG emissions.

You must calculate and report the annual process CO_2 emissions from each ammonia manufacturing process unit using the procedures in either paragraph (a) or (b) of this section.

(a) Calculate and report under this subpart the process CO_2 emissions by operating and maintaining CEMS according to the Tier 4 Calculation Methodology specified in §98.33(a)(4) and all associated requirements for Tier 4 in subpart C of this part (General Stationary Fuel Combustion Sources).

(b) Calculate and report under this subpart process CO_2 emissions using the procedures in paragraphs (b)(1) through (b)(6) of this section for gaseous feedstock, liquid feedstock, or solid feedstock, as applicable.

(1) *Gaseous feedstock*. You must calculate, from each ammonia manufacturing unit, the CO_2 process emissions from gaseous feedstock according to Equation G–1 of this section:

$$CO_{2,G,k} = \left(\sum_{n=1}^{12} \frac{44}{12} * Fdstk_{n,k} * CC_n * \frac{MW}{MVC} \right) * 0.001 \qquad \text{(Eq. G-1)}$$

Where:

$CO_{2,G}$ = Annual CO_2 emissions arising from feedstock consumption (metric tons).

$Fdstk_n$ = Volume of the gaseous feedstock used in month n (scf of feedstock).

CC_n = Carbon content of the gaseous feedstock, for month n (kg C per kg of feedstock), determined according to 98.74(c).

MW = Molecular weight of the gaseous feedstock (kg/kg-mole).

MVC = Molar volume conversion factor (849.5 scf per kg-mole at standard conditions).

44/12 = Ratio of molecular weights, CO_2 to carbon.

0.001 = Conversion factor from kg to metric tons.

k = Processing unit.

n = Number of month.

(2) *Liquid feedstock*. You must calculate, from each ammonia manufacturing unit, the CO_2 process emissions from liquid feedstock according to Equation G–2 of this section:

$$CO_{2,L,k} = \left(\sum_{n=1}^{12} \frac{44}{12} * Fdstk_{n,k} * CC_n \right) * 0.001 \qquad \text{(Eq. G-2)}$$

Where:

$CO_{2,L}$ = Annual CO_2 emissions arising from feedstock consumption (metric tons).

$Fdstk_n$ = Volume of the liquid feedstock used in month n (gallons of feedstock).

CC_n = Carbon content of the liquid feedstock, for month n (kg C per gallon of feedstock) determined according to 98.74(c).

44/12 = Ratio of molecular weights, CO_2 to carbon.

0.001 = Conversion factor from kg to metric tons.

k = Processing unit.

n = Number of month.

(3) *Solid feedstock*. You must calculate, from each ammonia manufacturing unit, the CO_2 process emissions from solid feedstock according to Equation G–3 of this section:

$$CO_{2,S,k} = \left(\sum_{n=1}^{12} \frac{44}{12} * Fdstk_{n,k} * CC_n \right) * 0.001 \qquad \text{(Eq. G-3)}$$

Where:

$CO_{2,S}$ = Annual CO_2 emissions arising from feedstock consumption (metric tons).

$Fdstk_n$ = Mass of the solid feedstock used in month n (kg of feedstock).

CC_n = Carbon content of the solid feedstock, for month n (kg C per kg of feedstock), determined according to 98.74(c).

44/12 = Ratio of molecular weights, CO_2 to carbon.

0.001 = Conversion factor from kg to metric tons.

k = Processing unit.

n = Number of month.

(4) You must calculate the annual process CO_2 emissions from each ammonia processing unit k at your facility summing emissions, as applicable from Equation G–1, G–2, and G–3 of this section using Equation G–4.

$$E_{CO2_k} = CO_{2,G} + CO_{2,S} + CO_{2,L} \qquad \text{(Eq. G-4)}$$

Where:

E_{CO2_k} = Annual CO_2 emissions from each ammonia processing unit k (metric tons).

k = Processing unit.

(5) You must determine the combined CO_2 emissions from all ammonia processing units at your facility using Equation G–5 of this section.

$$CO_2 = \sum_{k=1}^{n} E_{CO2_k} \qquad \text{(Eq. G-5)}$$

Where:

CO_2 = Annual combined CO_2 emissions from all ammonia processing units (metric tons).

E_{CO2_k} = Annual CO_2 emissions from each ammonia processing unit (metric tons).

k = Processing unit.

n = Total number of ammonia processing units.

(6) If applicable, ammonia manufacturing facilities that utilize the waste recycle stream as a fuel must calculate emissions associated with the waste stream for each ammonia process unit according to Equation G–6 of this section:

$$CO_2 = \left(\sum_{n=1}^{12} \frac{44}{12} * RecycleStream_n * CC_n * \frac{MW}{MVC} \right) \star 0.001 \qquad \text{(Eq. G-6)}$$

Where:

CO_2 = Annual CO_2 contained in waste recycle stream (metric tons).

$RecycleStream_n$ = Volume of the waste recycle stream in month n (scf).

CC_n = Carbon content of the waste recycle stream, for month n (kg C per kg of waste recycle stream) determined according to 98.74(f).

MW = Molecular weight of the waste recycle stream (kg/kg-mole).

MVC = Molar volume conversion factor (849.5 scf per kg-mole at standard conditions).

44/12 = Ratio of molecular weights, CO_2 to carbon.

0.001 = Conversion factor from kg to metric tons.

n = Number of month

(c) If GHG emissions from an ammonia manufacturing unit are vented through the same stack as any combustion unit or process equipment that reports CO_2 emissions using a CEMS that complies with the Tier 4 Calculation Methodology in subpart C of this part (General Stationary Fuel Combustion Sources), then the calculation methodology in paragraph (b) of this section shall not be used to calculate process emissions. The owner or operator shall report under this subpart the combined stack emissions according to the Tier 4 Calculation Methodology in § 98.33(a)(4) and all associated requirements for Tier 4 in subpart C of this part.

§ 98.74 Monitoring and QA/QC requirements.

(a) You must continuously measure the quantity of gaseous or liquid feedstock consumed using a flow meter. The quantity of solid feedstock consumed can be obtained from company records and aggregated on a monthly basis.

(b) You must document the procedures used to ensure the accuracy of the estimates of feedstock consumption.

(c) You must determine monthly carbon contents and the average molecular weight of each feedstock consumed from reports from your supplier. As an alternative to using supplier information on carbon contents, you can also collect a sample of each feedstock on a monthly basis and analyze the carbon content and molecular weight of the fuel using any of the following methods listed in paragraphs (c)(1) through (c)(8) of this section, as applicable.

(1) ASTM D1945–03 Standard Test Method for Analysis of Natural Gas by Gas Chromatography (incorporated by reference, *see* § 98.7).

(2) ASTM D1946–90 (Reapproved 2006) Standard Practice for Analysis of Reformed Gas by Gas Chromatography (incorporated by reference, *see* § 98.7).

(3) ASTM D2502–04 (Reapproved 2002) Standard Test Method for Estimation of Mean Relative Molecular Mass of Petroleum Oils from Viscosity Measurements (incorporated by reference, *see* § 98.7).

(4) ASTM D2503–92 (Reapproved 2007) Standard Test Method for Relative Molecular Mass (Molecular Weight) of Hydrocarbons by Thermoelectric Measurement of Vapor Pressure (incorporated by reference, *see* § 98.7).

(5) ASTM D3238–95 (Reapproved 2005) Standard Test Method for Calculation of Carbon Distribution and Structural Group Analysis of Petroleum Oils by the n-d-M Method (incorporated by reference, *see* § 98.7).

(6) ASTM D5291–02 (Reapproved 2007) Standard Test Methods for Instrumental Determination of Carbon, Hydrogen, and Nitrogen in Petroleum Products and Lubricants (incorporated by reference, *see* § 98.7).

(7) ASTM D3176–89 (Reapproved 2002) Standard Practice for Ultimate Analysis of Coal and Coke (incorporated by reference, *see* § 98.7).

(8) ASTM D5373–08 Standard Methods for Instrumental Determination of Carbon, Hydrogen, and Nitrogen in Laboratory Samples of Coal (incorporated by reference, *see* § 98.7).

(d) Calibrate all oil and gas flow meters (except for gas billing meters) and perform oil tank measurements according to the monitoring and QA/QC requirements for the Tier 3 methodology in § 98.34(b).

(e) For quality assurance and quality control of the supplier data, on an annual basis, you must measure the carbon contents of a representative sample of the feedstocks consumed using the appropriate ASTM Method as listed in paragraphs (c)(1) through (c)(8) of this section.

(f) Facilities must continuously measure the quantity of waste gas recycled using a flow meter, as applicable. You must determine the carbon content and the molecular weight of the waste recycle stream by collecting a sample of each waste recycle stream on a monthly basis and analyzing the carbon content using the appropriate ASTM Method as listed in paragraphs (c)(1) through (c)(8) of this section.

(g) If CO_2 from ammonia production is used to produce urea at the same facility, you must determine the quantity of urea produced using methods or plant instruments used for accounting purposes (such as sales records). You must document the procedures used to ensure the accuracy of the estimates of urea produced.

§ 98.75 Procedures for estimating missing data.

A complete record of all measured parameters used in the GHG emissions calculations is required. Therefore, whenever the monitoring and quality assurance procedures in § 98.74 cannot be followed (e.g., if a meter malfunctions during unit operation), a substitute data value for the missing parameter shall be used in the calculations following paragraphs (a) and (b) of this section. You must document and keep records of the procedures used for all such estimates.

(a) For missing data on monthly carbon contents of feedstock or the waste recycle stream, the substitute data value shall be the arithmetic average of the quality-assured values of that carbon content in the month preceding and the month immediately following the missing data incident. If no quality-assured data are available prior to the missing data incident, the substitute data value shall be the first quality-assured value for carbon content obtained in the month after the missing data period.

(b) For missing feedstock supply rates or waste recycle stream used to determine monthly feedstock consumption or monthly waste recycle stream quantity, you must determine the best available estimate(s) of the parameter(s), based on all available process data.

§ 98.76 Data reporting requirements.

In addition to the information required by § 98.3(c), each annual report must contain the information specified in paragraphs (a) and (b) of this section, as applicable for each ammonia manufacturing process unit.

(a) If a CEMS is used to measure CO_2 emissions, then you must report the relevant information required under § 98.37(e)(2)(vi) for the Tier 4 Calculation Methodology and the following information in this paragraph (a):

(1) Annual quantity of each type of feedstock consumed for ammonia manufacturing (scf of feedstock or gallons of feedstock or kg of feedstock).

(2) Method used for determining quantity of feedstock used.

(b) If a CEMS is not used to measure emissions, then you must report the following information:

(1) Annual CO_2 process emissions (metric tons) for each ammonia manufacturing process unit.

(2) Monthly quantity of each type of feedstock consumed for ammonia manufacturing for each ammonia processing unit (scf of feedstock or gallons of feedstock or kg of feedstock).

(3) Method used for determining quantity of monthly feedstock used.

(4) Whether carbon content for each feedstock for month n is based on reports from the supplier or analysis of carbon content.

(5) If carbon content of feedstock for month n is based on analysis, the test method used.

(6) Sampling analysis results of carbon content of petroleum coke as determined for QA/QC of supplier data under § 98.74(e).

(7) If a facility uses gaseous feedstock, the carbon content of the gaseous feedstock, for month n, (kg C per kg of feedstock).

(8) If a facility uses gaseous feedstock, the molecular weight of the gaseous feedstock (kg/kg-mole).

(9) If a facility uses gaseous feedstock, the molar volume conversion factor of the gaseous feedstock (scf per kg-mole).

(10) If a facility uses liquid feedstock, the carbon content of the liquid feedstock, for month n, (kg C per gallon of feedstock).

(11) If a facility uses solid feedstock, the carbon content of the solid feedstock, for month n, (kg C per kg of feedstock).

(12) Annual CO_2 emissions associated with the waste recycle stream for each ammonia process unit (metric tons)

(13) Carbon content of the waste recycle stream for month n for each ammonia process unit (kg C per kg of waste recycle stream).

(14) Volume of the waste recycle stream for month n for each ammonia process unit (scf)

(15) Method used for analyzing carbon content of waste recycle stream.

(16) Annual urea production (metric tons) and method used to determine urea production.

(17) Uses of urea produced, if known, such as but not limited to fertilizer, animal feed, manufacturing of plastics or resins, and pollution control technologies.

(c) Total pounds of synthetic fertilizer produced through and total nitrogen contained in that fertilizer.

§ 98.77 Records that must be retained.

In addition to the records required by § 98.3(g), you must retain the following records specified in paragraphs (a) and (b) of this section for each ammonia manufacturing unit.

(a) If a CEMS is used to measure emissions, retain records of all feedstock purchases in addition to the requirements in §98.37 for the Tier 4 Calculation Methodology.

(b) If a CEMS is not used to measure process CO_2 emissions, you must also retain the records specified in paragraphs (b)(1) through (b)(2) of this section:

(1) Records of all analyses and calculations conducted for reported data as listed in §98.76(b).

(2) Monthly records of carbon content of feedstock from supplier and/or all analyses conducted of carbon content.

§98.78 Definitions.

All terms used in this subpart have the same meaning given in the Clean Air Act and subpart A of this part.

Subpart H—Cement Production

§98.80 Definition of the source category.

The cement production source category consists of each kiln and each in-line kiln/raw mill at any portland cement manufacturing facility including alkali bypasses, and includes kilns and in-line kiln/raw mills that burn hazardous waste.

§98.81 Reporting threshold.

You must report GHG emissions under this subpart if your facility contains a cement production process and the facility meets the requirements of either §98.2(a)(1) or (2).

§98.82 GHGs to report.

You must report:

(a) CO_2 process emissions from calcination in each kiln.

(b) CO_2 combustion emissions from each kiln.

(c) CH_4 and N_2O combustion emissions from each kiln. You must calculate and report these emissions under subpart C of this part (General Stationary Fuel Combustion Sources) by following the requirements of subpart C.

(d) CO_2, CH_4, and N_2O emissions from each stationary combustion unit other than kilns. You must report these emissions under subpart C of this part (General Stationary Fuel Combustion Sources) by following the requirements of subpart C.

§98.83 Calculating GHG emissions.

You must calculate and report the annual process CO_2 emissions from each kiln using the procedure in paragraphs (a) and (b) of this section.

(a) For each cement kiln that meets the conditions specified in §98.33(b)(4)(ii) or (b)(4)(iii), you must calculate and report under this subpart the combined process and combustion CO_2 emissions by operating and maintaining a CEMS to measure CO_2 emissions according to the Tier 4 Calculation Methodology specified in §98.33(a)(4) and all associated requirements for Tier 4 in subpart C of this part (General Stationary Fuel Combustion Sources).

(b) For each kiln that is not subject to the requirements in paragraph (a) of this section, calculate and report the process and combustion CO_2 emissions from the kiln by using the procedure in either paragraph (c) or (d) of this section.

(c) Calculate and report under this subpart the combined process and combustion CO_2 emissions by operating and maintaining a CEMS to measure CO_2 emissions according to the Tier 4 Calculation Methodology specified in §98.33(a)(4) and all associated requirements for Tier 4 in subpart C of this part (General Stationary Fuel Combustion Sources).

(d) Calculate and report process and combustion CO_2 emissions separately using the procedures specified in paragraphs (d)(1) through (d)(4) of this section.

(1) Calculate CO_2 process emissions from all kilns at the facility using Equation H–1 of this section:

$$CO_{2CMF} = \sum_{m=1}^{k} CO_{2Cli,m} + CO_{2rm} \qquad \text{(Eq. H-1)}$$

Where:

$CO_{2\ CMF}$ = Annual process emissions of CO_2 from cement manufacturing, metric tons.

$CO_{2\ Cli,m}$ = Total annual emissions of CO_2 from clinker production from kiln m, metric tons.

$CO_{2\ rm}$ = Total annual emissions of CO_2 from raw materials, metric tons.

k = Total number of kilns at a cement manufacturing facility.

(2) *CO_2 emissions from clinker production*. Calculate CO_2 emissions from each kiln using Equations H–2 through H–5 of this section.

$$CO_{2\ Cli,m} = \sum_{j=1}^{p}\left[\left(Cli_{,j}\right)*\left(EF_{Cli,j}\right)*\frac{2000}{2205}\right] + \sum_{i=1}^{r}\left[\left(CKD_{,i}\right)*\left(EF_{CKD,i}\right)*\frac{2000}{2205}\right] \qquad \text{(Eq. H-2)}$$

Where:

$Cli_{,j}$ = Quantity of clinker produced in month j from kiln m, tons.

$EF_{Cli,j}$ = Kiln specific clinker emission factor for month j for kiln m, metric tons CO_2/metric ton clinker computed as specified in Equation H–3 of this section.

$CKD_{,i}$ = Cement kiln dust (CKD) not recycled to the kiln in quarter i from kiln m, tons.

$EF_{CKD,i}$ = Kiln specific CKD emission factor for quarter i from kiln m, metric tons CO_2/metric ton CKD computed as specified in Equation H–4 of this section.

p = Number of months for clinker calculation, 12.

r = Number of quarters for CKD calculation, 4.

2000/2205 = Conversion factor to convert tons to metric tons.

(i) *Kiln-Specific Clinker Emission Factor*. (A) Calculate the kiln-specific clinker emission factor using Equation H–3 of this section.

$$EF_{\text{Cli}} = \left(CLi_{CaO} - Cli_{ncCaO}\right)*MR_{CaO} + \left(Cli_{MgO} - Cli_{ncMgO}\right)*MR_{MgO} \qquad \text{(Eq. H-3)}$$

Where:

Cli_{CaO} = Monthly total CaO content of Clinker, wt-fraction.

Cli_{ncCaO} = Monthly non-calcined CaO content of Clinker, wt-fraction.

MR_{CaO} = Molecular-weight Ratio of CO_2/CaO = 0.785.

Cli_{MgO} = Monthly total MgO content of Clinker, wt-fraction.

Cli_{ncMgO} = Monthly non-calcined MgO content of Clinker, wt-fraction.

MR_{MgO} = Molecular-weight Ratio of CO_2/MgO = 1.092.

(B) Non-calcined CaO is CaO that remains in the clinker in the form of $CaCO_3$ and CaO in the clinker that entered the kiln as a non-carbonate species. Non-calcined MgO is MgO that remains in the clinker in the form of $MgCO_3$ and MgO in the clinker that entered the kiln as a non-carbonate species.

(ii) *Kiln-Specific CKD Emission Factor*. (A) Calculate the kiln-specific CKD emission factor for CKD not recycled to the kiln using Equation H–4 of this section.

$$EF_{\text{CKD}} = \left(CKD_{CaO} - CKD_{ncCaO}\right)*MR_{CaO} + \left(CKD_{MgO} - CKD_{ncMgO}\right)*MR_{MgO} \qquad \text{(Eq. H-4)}$$

Where:

CKD_{CaO} = Quarterly total CaO content of CKD not recycled to the kiln, wt-fraction.

CKD_{CaO} = Quarterly non-calcined CaO content of CKD not recycled to the kiln, wt-fraction.

MR_{CaO} = Molecular-weight Ratio of CO_2/CaO = 0.785.

CKD_{MgO} = Quarterly total MgO content of CKD not recycled to the kiln, wt-fraction.

CKD_{MgO} = Quarterly non-calcined MgO content of CKD not recycled to the kiln, wt-fraction.

MR_{MgO} = Molecular-weight Ratio of CO_2/MgO = 1.092.

(B) Non-calcined CaO is CaO that remains in the CKD in the form of $CaCO_3$ and CaO in the CKD that entered the kiln as a non-carbonate species. Non-calcined MgO is MgO that remains in the CKD in the form of $MgCO_3$ and MgO in the CKD that entered the kiln as a non-carbonate species.

(3) *CO_2 emissions from raw materials.* Calculate CO_2 emissions using Equation H–5 of this section:

$$CO_{2,rm} = \sum_{i=1}^{m} rm * TOCrm * \frac{44}{12} * \frac{2000}{2205} \qquad \text{(Eq. H-5)}$$

Where:

rm = The amount of raw material i consumed annually, tons/yr (dry basis).

$CO_{2,rm}$ = Annual CO_2 emissions from raw materials.

TOCrm = Organic carbon content of raw material i (dry basis), as determined in §98.84(c) or using a default factor of 0.2 percent of total raw material weight.

M = Number of raw materials.

44/12 = Ratio of molecular weights, CO_2 to carbon.

2000/2205 = Conversion factor to convert tons to metric tons.

(4) Calculate and report under subpart C of this part (General Stationary Fuel Combustion Sources) the combustion CO_2 emissions from the kiln according to the applicable requirements in subpart C.

§98.84 Monitoring and QA/QC requirements.

(a) You must determine the weight fraction of total CaO and total MgO in CKD not recycled to the kiln from each kiln using ASTM C114–09, Standard Test Methods for Chemical Analysis of Hydraulic Cement (incoporated by reference, see §98.7). The monitoring must be conducted quarterly for each kiln from a CKD sample drawn either as CKD is exiting the kiln or from bulk CKD storage.

(b) You must determine the weight fraction of total CaO and total MgO in clinker from each kiln using ASTM C114–07 Standard Test Methods for Chemical Analysis of Hydraulic Cement (incorporated by reference, see §98.7). The monitoring must be conducted monthly for each kiln from a clinker sample drawn from bulk clinker storage.

(c) The total organic carbon contents (dry basis) of each raw material must be determined annually using ASTM C114–09 Standard Test Methods for Chemical Analysis of Hydraulic Cement (incorporated by reference, *see* §98.7) or a similar industry standard practice or method approved for total organic carbon determination in raw mineral materials. The analysis must be conducted on sample material drawn from bulk raw material storage for each category of raw material (i.e., limestone, sand, shale, iron oxide, and alumina). Facilities that opt to use the default total organic carbon factor provided in §98.83(d)(3), are not required to monitor for TOC.

(d) The quantity of clinker produced monthly by each kiln must be determined by direct weight measurement using the same plant instruments used for accounting purposes, such as weigh hoppers or belt weigh feeders.

(e) The quantity of CKD not recycled to the kiln by each kiln must be determined quarterly by direct weight measurement using the same plant instruments used for accounting purposes, such as weigh hoppers, truck weigh scales, or belt weigh feeders.

(f) The quantity of each category of raw materials consumed annually by the facility (e.g., limestone, sand, shale, iron oxide, and alumina) must be determined monthly by direct weight measurement using the same plant instruments used for accounting purposes, such as weigh hoppers, truck weigh scales, or belt weigh feeders.

(g) The monthly non-calcined CaO and MgO that remains in the clinker in the form of $CaCO_3$ or that enters the kiln as a non-carbonate species may be assumed to be a default value of 0.0 or may be determined monthly by careful chemical analysis of feed material and clinker material from each kiln using well documented analytical and calculational methods or the appropriate industry standard practice.

(h) The quarterly non-calcined CaO and MgO that remains in the CKD in the form of $CaCO_3$ or that enters the kiln as a non-carbonate species may be assumed to be a default value of 0.0 or may be determined quarterly by careful chemical analysis of feed material and CKD material from each kiln using well documented analytical and calculational methods or the appropriate industry standard practice.

§ 98.85 Procedures for estimating missing data.

A complete record of all measured parameters used in the GHG emissions calculations in § 98.83 is required. Therefore, whenever a quality-assured value of a required parameter is unavailable, a substitute data value for the missing parameter shall be used in the calculations. The owner or operator must document and keep records of the procedures used for all such estimates.

(a) If the CEMS approach is used to determine combined process and combustion CO_2 emissions, the missing data procedures in § 98.35 apply.

(b) For CO_2 process emissions from cement manufacturing facilities calculated according to § 98.83(d), if data on the carbonate content (of clinker or CKD), noncalcined content (of clinker or CKD) or the annual organic carbon content of raw materials are missing, facilities must undertake a new analysis.

(c) For each missing value of monthly clinker production the substitute data value must be the best available estimate of the monthly clinker production based on information used for accounting purposes, or use the maximum tons per day capacity of the system and the number of days per month.

(d) For each missing value of monthly raw material consumption the substitute data value must be the best available estimate of the monthly raw material consumption based on information used for accounting purposes (such as purchase records), or use the maximum tons per day raw material throughput of the kiln and the number of days per month.

§ 98.86 Data reporting requirements.

In addition to the information required by § 98.3(c), each annual report must contain the information specified in paragraphs (a) and (b) of this section, as appropriate.

(a) If a CEMS is used to measure CO_2 emissions, then you must report under this subpart the relevant information required by § 98.36(e)(2)(vi) and the information listed in this paragraph(a):

(1) Monthly clinker production from each kiln at the facility.

(2) Monthly cement production from each kiln at the facility.

(3) Number of kilns and number of operating kilns.

(b) If a CEMS is not used to measure CO_2 emissions, then you must report the information listed in this paragraph (b) for each kiln:

(1) Kiln identification number.

(2) Monthly clinker production from each kiln.

(3) Monthly cement production from each kiln.

(4) Number of kilns and number of operating kilns.

(5) Quarterly quantity of CKD not recycled to the kiln for each kiln at the facility.

(6) Monthly fraction of total CaO, total MgO, non-calcined CaO and non-calcined MgO in clinker for each kiln (as wt-fractions).

(7) Method used to determine non-calcined CaO and non-calcined MgO in clinker.

(8) Quarterly fraction of total CaO, total MgO, non-calcined CaO and non-

calcined MgO in CKD not recycled to the kiln for each kiln (as wt-fractions).

(9) Method used to determine non-calcined CaO and non-calcined MgO in CKD.

(10) Monthly kiln-specific clinker CO_2 emission factors for each kiln (metric tons CO_2/metric ton clinker produced).

(11) Quarterly kiln-specific CKD CO_2 emission factors for each kiln (metric tons CO_2/metric ton CKD produced).

(12) Annual organic carbon content of each raw material (wt-fraction, dry basis).

(13) Annual consumption of each raw material (dry basis).

(14) Number of times missing data procedures were used to determine the following information:

(i) Clinker production (number of months).

(ii) Carbonate contents of clinker (number of months).

(iii) Non-calcined content of clinker (number of months).

(iv) CKD not recycled to kiln (number of quarters).

(v) Non-calcined content of CKD (number of quarters)

(vi) Organic carbon contents of raw materials (number of times).

(vii) Raw material consumption (number of months).

§ 98.87 Records that must be retained.

(a) If a CEMS is used to measure CO_2 emissions, then you must retain under this subpart the records required for the Tier 4 Calculation Methodology in § 98.37.

(1) Documentation of monthly calculated kiln-specific clinker CO_2 emission factor.

(2) Documentation of quarterly calculated kiln-specific CKD CO_2 emission factor.

(3) Measurements, records and calculations used to determine reported parameters.

(b) If a CEMS is not used to measure CO_2 emissions, then in addition to the records required by § 98.3(g), you must retain the records specified in paragraphs (a) through (b) of this section for each portland cement manufacturing facility.

§ 98.88 Definitions.

All terms used in this subpart have the same meaning given in the Clean Air Act and subpart A of this part.

Subparts I–J [Reserved]

Subpart K—Ferroalloy Production

§ 98.110 Definition of the source category.

The ferroalloy production source category consists of any facility that uses pyrometallurgical techniques to produce any of the following metals: ferrochromium, ferromanganese, ferromolybdenum, ferronickel, ferrosilicon, ferrotitanium, ferrotungsten, ferrovanadium, silicomanganese, or silicon metal.

§ 98.111 Reporting threshold.

You must report GHG emissions under this subpart if your facility contains a ferroalloy production process and the facility meets the requirements of either § 98.2(a)(1) or (2).

§ 98.112 GHGs to report.

You must report:

(a) Process CO_2 emissions from each electric arc furnace (EAF) used for the production of any ferroalloy listed in § 98.110.

(b) CO_2, CH_4, and N_2O emissions from each stationary combustion unit following the requirements of subpart C of this part. You must report these emissions under subpart C of this part (General Stationary Fuel Combustion Sources).

§ 98.113 Calculating GHG emissions.

You must calculate and report the annual process CO_2 emissions from each EAF using the procedures in either paragraph (a) or (b) of this section.

(a) Calculate and report under this subpart the process CO_2 emissions by operating and maintaining CEMS according to the Tier 4 Calculation Methodology in § 98.33(a)(4) and all associated requirements for Tier 4 in subpart C of this part (General Stationary Fuel Combustion Sources).

(b) Calculate and report under this subpart the annual process CO_2 emissions using the procedure in either paragraph (b)(1) or (b)(2) of this section.

(1) Calculate and report under this subpart the annual process CO_2 emissions from EAFs by operating and maintaining a CEMS according to the Tier 4 Calculation Methodology specified in §98.33(a)(4) and the applicable requirements for Tier 4 in subpart C of this part (General Stationary Fuel Combustion Sources).

(2) Calculate and report under this subpart the annual process CO_2 emissions from the EAFs using the carbon mass balance procedure specified in paragraphs (b)(2)(i) and (b)(2)(ii) of this section.

(i) For each EAF, determine the annual mass of carbon in each carbon-containing input and output material for the EAF and estimate annual process CO_2 emissions from the EAF using Equation K–1 of this section. Carbon-containing input materials include carbon electrodes and carbonaceous reducing agents. If you document that a specific input or output material contributes less than 1 percent of the total carbon into or out of the process, you do not have to include the material in your calculation using Equation K–1 of this section.

$$
\begin{aligned}
E_{CO2} = {} & \frac{44}{12} \times \frac{2000}{2205} \times \sum_{1}^{i} \left(M_{reducing\ agent_i} \times C_{reducing\ agent_i} \right) \\
& + \frac{44}{12} \times \frac{2000}{2205} \times \sum_{1}^{m} \left(M_{electrode_m} \times C_{electrode_m} \right) \\
& + \frac{44}{12} \times \frac{2000}{2205} \times \sum_{1}^{h} \left(M_{ore_h} \times C_{ore_h} \right) \\
& + \frac{44}{12} \times \frac{2000}{2205} \times \sum_{1}^{j} \left(M_{\mathrm{flux_j}} \times \mathrm{C}_{\mathrm{flux_j}} \right) \\
& - \frac{44}{12} \times \frac{2000}{2205} \times \sum_{1}^{k} \left(M_{product\ outgoing_k} \times C_{product\ outgoing_k} \right) \\
& - \frac{44}{12} \times \frac{2000}{2205} \times \sum_{1}^{l} \left(M_{non\text{-}product\ outgoing_l} \times C_{non\text{-}product\ outgoing_l} \right)
\end{aligned}
\qquad \text{(Eq. K-1)}
$$

Where:

E_{CO2} = Annual process CO_2 emissions from an individual EAF (metric tons).

44/12 = Ratio of molecular weights, CO_2 to carbon.

2000/2205 = Conversion factor to convert tons to metric tons.

$M_{reducing\ agent_i}$ = Annual mass of reducing agent *i* fed, charged, or otherwise introduced into the EAF (tons).

$C_{reducing\ agent_i}$ = Carbon content in reducing agent *i* (percent by weight, expressed as a decimal fraction).

$M_{electrode_m}$ = Annual mass of carbon electrode *m* consumed in the EAF (tons).

$C_{electrode_m}$ = Carbon content of the carbon electrode *m* (percent by weight, expressed as a decimal fraction).

M_{ore_h} = Annual mass of ore *h* charged to the EAF (tons).

C_{ore_h} = Carbon content in ore *h* (percent by weight, expressed as a decimal fraction).

M_{flux_j} = Annual mass of flux material *j* fed, charged, or otherwise introduced into the EAF to facilitate slag formation (tons).

C_{flux_j} = Carbon content in flux material *j* (percent by weight, expressed as a decimal fraction).

$M_{product_k}$ = Annual mass of alloy product *k* tapped from EAF (tons).

$C_{product_k}$ = Carbon content in alloy product *k*. (percent by weight, expressed as a decimal fraction).

$M_{non\text{-}product\ outgoing_l}$ = Annual mass of non-product outgoing material *l* removed from EAF (tons).

$C_{non\text{-}product\ outgoing_l}$ = Carbon content in non-product outgoing material *l* (percent by weight, expressed as a decimal fraction).

(ii) Determine the combined annual process CO_2 emissions from the EAFs at your facility using Equation K–2 of this section.

$$CO_2 = \sum_{1}^{k} E_{CO2_k} \qquad \text{(Eq. K-2)}$$

Where:

CO_2 = Annual process CO_2 emissions from EAFs at facility used for the production of any ferroalloy listed in §98.110 (metric tons).

E_{CO2_k} = Annual process CO_2 emissions calculated from EAF *k* calculated using Equation K–1 of this section (metric tons).

k = Total number of EAFs at facility used for the production of any ferroalloy listed in §98.110.

(c) If GHG emissions from an EAF are vented through the same stack as any combustion unit or process equipment that reports CO_2 emissions using a CEMS that complies with the Tier 4 Calculation Methodology in subpart C of this part (General Stationary Fuel Combustion Sources), then the calculation methodology in paragraph (b) of this section shall not be used to calculate process emissions. The owner or operator shall report under this subpart the combined stack emissions according to the Tier 4 Calculation Methodology in §98.33(a)(4) and all associated requirements for Tier 4 in subpart C of this part.

(d) For the EAFs at your facility used for the production of any ferroalloy listed in Table K–1 of this subpart, you must calculate and report the annual CH_4 emissions using the procedure specified in paragraphs (d)(1) and (2) of this section.

(1) For each EAF, determine the annual CH_4 emissions using Equation K–3 of this section.

$$E_{CH4} = \sum_{1}^{i} \left(M_{product_i} \times \frac{2000}{2205} \times EF_{product_i} \right) \qquad \text{(Eq. K-3)}$$

Where:

E_{CH4} = Annual process CH_4 emissions from an individual EAF (metric tons).

$M_{product_i}$ = Annual mass of alloy product *i* produced in the EAF (tons).

2000/2205 = Conversion factor to convert tons to metric tons.

$EF_{product_i}$ = CH_4 emission factor for alloy product *i* from Table K–1 in this subpart (kg of CH_4 emissions per metric ton of alloy product *i*).

(2) Determine the combined process CH_4 emissions from the EAFs at your facility using Equation K–4 of this section:

$$CH_4 = \sum_{1}^{j} E_{CH4_j} \qquad \text{(Eq. K-4)}$$

Where:

CH_4 = Annual process CH_4 emissions from EAFs at facility used for the production of ferroalloys listed in Table K–1 of this subpart (metric tons).

E_{CH4_j} = Annual process CH_4 emissions from EAF *j* calculated using Equation K–3 of this section (metric tons).

j = Total number of EAFs at facility used for the production of ferroalloys listed in Table K–1 of this subpart.

§98.114 Monitoring and QA/QC requirements.

If you determine annual process CO_2 emissions using the carbon mass balance procedure in §98.113(b)(2), you must meet the requirements specified in paragraphs (a) and (b) of this section.

(a) Determine the annual mass for each material used for the calculations of annual process CO_2 emissions using

Equation K–1 of this subpart by summing the monthly mass for the material determined for each month of the calendar year. The monthly mass may be determined using plant instruments used for accounting purposes, including either direct measurement of the quantity of the material placed in the unit or by calculations using process operating information.

(b) For each material identified in paragraph (a) of this section, you must determine the average carbon content of the material consumed, used, or produced in the calendar year using the methods specified in either paragraph (b)(1) or (b)(2) of this section. If you document that a specific process input or output contributes less than one percent of the total mass of carbon into or out of the process, you do not have to determine the monthly mass or annual carbon content of that input or output.

(1) Information provided by your material supplier.

(2) Collecting and analyzing at least three representative samples of the material inputs and outputs each year. The carbon content of the material must be analyzed at least annually using the standard methods (and their QA/QC procedures) specified in paragraphs (b)(2)(i) through (b)(2)(iii) of this section, as applicable.

(i) ASTM E1941–04, Standard Test Method for Determination of Carbon in Refractory and Reactive Metals and Their Alloys (incorporated by reference, *see* § 98.7) for analysis of metal ore and alloy product.

(ii) ASTM D5373–08 Standard Test Methods for Instrumental Determination of Carbon, Hydrogen, and Nitrogen in Laboratory Samples of Coal (incorporated by reference, *see* § 98.7), for analysis of carbonaceous reducing agents and carbon electrodes.

(iii) ASTM C25–06, Standard Test Methods for Chemical Analysis of Limestone, Quicklime, and Hydrated Lime (incorporated by reference, *see* § 98.7) for analysis of flux materials such as limestone or dolomite.

§ 98.115 Procedures for estimating missing data.

A complete record of all measured parameters used in the GHG emissions calculations in § 98.113 is required. Therefore, whenever a quality-assured value of a required parameter is unavailable, a substitute data value for the missing parameter shall be used in the calculations as specified in the paragraphs (a) and (b) of this section. You must document and keep records of the procedures used for all such estimates.

(a) If you determine CO_2 emissions for the EAFs at your facility using the carbon mass balance procedure in § 98.113(b), 100 percent data availability is required for the carbon content of the input and output materials. You must repeat the test for average carbon contents of inputs according to the procedures in § 98.114(b) if data are missing.

(b) For missing records of the monthly mass of carbon-containing inputs and outputs, the substitute data value must be based on the best available estimate of the mass of the inputs and outputs from on all available process data or data used for accounting purposes, such as purchase records.

(c) If you are required to calculate CH_4 emissions for an EAF at your facility as specified in § 98.113(d), the estimate is based an annual quantity of certain alloy products, so 100 percent data availability is required.

§ 98.116 Data reporting requirements.

In addition to the information required by § 98.3(c), each annual report must contain the information specified in paragraphs (a) through (e) of this section, as applicable:

(a) Annual facility ferroalloy product production capacity (tons).

(b) Annual production for each ferroalloy product (tons) identified in § 98.110, as applicable.

(c) Total number of EAFs at facility used for production of ferroalloy products reported in paragraph (a)(4) of this section.

(d) If a CEMS is used to measure CO_2 emissions, then you must report under this subpart the relevant information required by § 98.37 for the Tier 4 Calculation Methodology and the following information specified in paragraphs (d)(1) through (d)(3) of this section.

(1) Annual process CO_2 emissions (in metric tons) from each EAF used for the production of any ferroalloy listed in Table K–1 of this subpart (metric tons).

(2) Annual process CH_4 emissions (in metric tons) from each EAF used for the production of any ferroalloy listed in Table K–1 of this subpart (metric tons).

(3) Identification number of each EAF.

(e) If a CEMS is not used to measure CO_2 process emissions, and the carbon mass balance procedure is used to determine CO_2 emissions according to the requirements in §98.113(b), then you must report the following information specified in paragraphs (e)(1) through (e)(7) of this section.

(1) Annual process CO_2 emissions (in metric tons) from each EAF used for the production of any ferroalloy listed in Table K–1 of this subpart (metric tons).

(3) Identification number for each material.

(4) Annual material quantity for each material included for the calculation of annual process CO_2 emissions for each EAF.

(5) Annual average of the carbon content determinations for each material included for the calculation of annual process CO_2 emissions for each EAF (percent by weight, expressed as a decimal fraction).

(6) List the method used for the determination of carbon content for each material reported in paragraph (e)(5) of this section (e.g., supplier provided information, analyses of representative samples you collected).

(7) If you use the missing data procedures in §98.115(b), you must report how monthly mass of carbon-containing inputs and outputs with missing data was determined and the number of months the missing data procedures were used.

§98.117 Records that must be retained.

In addition to the records required by §98.3(g), you must retain the records specified in paragraphs (a) through (d) of this section for each EAF, as applicable.

(a) If a CEMS is used to measure CO_2 emissions according to the requirements in §98.113(a), then you must retain under this subpart the records required for the Tier 4 Calculation Methodology in §98.37 and the information specified in paragraphs (a)(1) through (a)(3) of this section.

(1) Monthly EAF production quantity for each ferroalloy product (tons).

(2) Number of EAF operating hours each month.

(3) Number of EAF operating hours in a calendar year.

(b) If the carbon mass balance procedure is used to determine CO_2 emissions according to the requirements in §98.113(b)(2), then you must retain records for the information specified in paragraphs (b)(1) through (b)(5) of this section.

(1) Monthly EAF production quantity for each ferroalloy product (tons).

(2) Number of EAF operating hours each month.

(3) Number of EAF operating hours in a calendar year.

(4) Monthly material quantity consumed, used, or produced for each material included for the calculations of annual process CO_2 emissions (tons).

(5) Average carbon content determined and records of the supplier provided information or analyses used for the determination for each material included for the calculations of annual process CO_2 emissions.

(c) You must keep records that include a detailed explanation of how company records of measurements are used to estimate the carbon input and output to each EAF, including documentation of specific input or output materials excluded from Equation K–1 of this subpart that contribute less than 1 percent of the total carbon into or out of the process. You also must document the procedures used to ensure the accuracy of the measurements of materials fed, charged, or placed in an EAF including, but not limited to, calibration of weighing equipment and other measurement devices. The estimated accuracy of measurements made with these devices must also be recorded, and the technical basis for these estimates must be provided.

(d) If you are required to calculate CH_4 emissions for the EAF as specified

in § 98.113(d), you must maintain records of the total amount of each alloy product produced for the specified reporting period, and the appropriate alloy-product specific emission factor used to calculate the CH_4 emissions.

§ 98.118 Definitions.

All terms used of this subpart have the same meaning given in the Clean Air Act and subpart A of this part.

TABLE K–1 TO SUBPART K OF PART 98—ELECTRIC ARC FURNACE (EAF) CH_4 EMISSION FACTORS

Alloy product produced in EAF	CH_4 emission factor (kg CH_4 per metric ton product)		
	EAF Operation		
	Batch-charging	Sprinkle-charging [a]	Sprinkle-charging and >750 °C [b]
Silicon metal	1.5	1.2	0.7
Ferrosilicon 90%	1.4	1.1	0.6
Ferrosilicon 75%	1.3	1.0	0.5
Ferrosilicon 65%	1.3	1.0	0.5

[a] Sprinkle-charging is charging intermittently every minute.
[b] Temperature measured in off-gas channel downstream of the furnace hood.

Subparts L–M [Reserved]

Subpart N—Glass Production

§ 98.140 Definition of the source category.

(a) A glass manufacturing facility manufactures flat glass, container glass, pressed and blown glass, or wool fiberglass by melting a mixture of raw materials to produce molten glass and form the molten glass into sheets, containers, fibers, or other shapes. A glass manufacturing facility uses one or more continuous glass melting furnaces to produce glass.

(b) A glass melting furnace that is an experimental furnace or a research and development process unit is not subject to this subpart.

§ 98.141 Reporting threshold.

You must report GHG emissions under this subpart if your facility contains a glass production process and the facility meets the requirements of either § 98.2(a)(1) or (2).

§ 98.142 GHGs to report.

You must report:

(a) CO_2 process emissions from each continuous glass melting furnace.

(b) CO_2 combustion emissions from each continuous glass melting furnace.

(c) CH_4 and N_2O combustion emissions from each continuous glass melting furnace. You must calculate and report these emissions under subpart C of this part (General Stationary Fuel Combustion Sources) by following the requirements of subpart C.

(d) CO_2, CH_4, and N_2O emissions from each stationary fuel combustion unit other than continuous glass melting furnaces. You must report these emissions under subpart C of this part (General Stationary Fuel Combustion Sources) by following the requirements of subpart C.

§ 98.143 Calculating GHG emissions.

You must calculate and report the annual process CO_2 emissions from each continuous glass melting furnace using the procedure in paragraphs (a) and (b) of this section.

(a) For each continuous glass melting furnace that meets the conditions specified in § 98.33(b)(4)(ii) or (iii), you must calculate and report under this subpart the combined process and combustion CO_2 emissions by operating and maintaining a CEMS to measure CO_2 emissions according to the Tier 4 Calculation Methodology specified in § 98.33(a)(4) and all associated requirements for Tier 4 in subpart C of this

part (General Stationary Fuel Combustion Sources).

(b) For each continuous glass melting furnace that is not subject to the requirements in paragraph (a) of this section, calculate and report the process and combustion CO_2 emissions from the glass melting furnace by using either the procedure in paragraph (b)(1) of this section or the procedure in paragraphs (b)(2) through (b)(7) of this section, except as specified in paragraph (c) of this section.

(1) Calculate and report under this subpart the combined process and combustion CO_2 emissions by operating and maintaining a CEMS to measure CO_2 emissions according to the Tier 4 Calculation Methodology specified in § 98.33(a)(4) and all associated requirements for Tier 4 in subpart C of this part (General Stationary Fuel Combustion Sources).

(2) Calculate and report the process and combustion CO_2 emissions separately using the procedures specified in paragraphs (b)(2)(i) through (b)(2)(vi) of this section.

(i) For each carbonate-based raw material charged to the furnace, obtain from the supplier of the raw material the carbonate-based mineral mass fraction.

(ii) Determine the quantity of each carbonate-based raw material charged to the furnace.

(iii) Apply the appropriate emission factor for each carbonate-based raw material charged to the furnace, as shown in Table N–1 to this subpart.

(iv) Use Equation N–1 of this section to calculate process mass emissions of CO_2 for each furnace:

$$E_{CO2} = \sum_{i=1}^{n} MF_i \bullet \left(M_i \bullet \frac{2000}{2205} \right) \bullet EF_i \bullet F_i \qquad \text{(Eq. N-1)}$$

Where:

E_{CO2} = Process emissions of CO_2 from the furnace (metric tons).

n = Number of carbonate-based raw materials charged to furnace.

MF_i = Annual average mass fraction of carbonate-based mineral i in carbonate-based raw material i (percentage, expressed as a decimal).

M_i = Annual amount of carbonate-based raw material i charged to furnace (tons).

2000/2205 = Conversion factor to convert tons to metric tons.

EF_i = Emission factor for carbonate-based raw material i (metric ton CO_2 per metric ton carbonate-based raw material as shown in Table N–1 to this subpart).

F_i = Fraction of calcination achieved for carbonate-based raw material i, assumed to be equal to 1.0 (percentage, expressed as a decimal).

(v) You must calculate the total process CO_2 emissions from continuous glass melting furnaces at the facility using Equation N–2 of this section:

$$CO_2 = \sum_{i=1}^{k} E_{CO_2 i} \qquad \text{(Eq. N-2)}$$

Where:

CO_2 = Annual process CO_2 emissions from glass manufacturing facility (metric tons).

E_{CO2i} = Annual CO_2 emissions from glass melting furnace i (metric tons).

k = Number of continuous glass melting furnaces.

(vi) Calculate and report under subpart C of this part (General Stationary Fuel Combustion Sources) the combustion CO_2 emissions in the glass furnace according to the applicable requirements in subpart C.

(c) As an alternative to data provided by the raw material supplier, a value of 1.0 can be used for the mass fraction (MF_i) of carbonate-based mineral i in Equation N–1 of this section.

§ 98.144 Monitoring and QA/QC requirements.

(a) You must measure annual amounts of carbonate-based raw materials charged to each continuous glass melting furnace from monthly measurements using plant instruments used for accounting purposes, such as calibrated scales or weigh hoppers. Total annual mass charged to glass melting

furnaces at the facility shall be compared to records of raw material purchases for the year.

(b) You must measure carbonate-based mineral mass fractions at least annually to verify the mass fraction data provided by the supplier of the raw material; such measurements shall be based on sampling and chemical analysis conducted by a certified laboratory using ASTM D3682–01 (Reapproved 2006) Standard Test Method for Major and Minor Elements in Combustion Residues from Coal Utilization Processes (incorporated by reference, see § 98.7).

(c) You must determine the annual average mass fraction for the carbonate-based mineral in each carbonate-based raw material by calculating an arithmetic average of the monthly data obtained from raw material suppliers or sampling and chemical analysis.

(d) You must determine on an annual basis the calcination fraction for each carbonate consumed based on sampling and chemical analysis using an industry consensus standard. This chemical analysis must be conducted using an x-ray fluorescence test or other enhanced testing method published by an industry consensus standards organization (e.g., ASTM, ASME, API, etc.).

§ 98.145 Procedures for estimating missing data.

A complete record of all measured parameters used in the GHG emissions calculations is required (e.g., carbonate raw materials consumed, etc.). If the monitoring and quality assurance procedures in § 98.144 cannot be followed and data is missing, you must use the most appropriate of the missing data procedures in paragraphs (a) and (b) of this section. You must document and keep records of the procedures used for all such missing value estimates.

(a) For missing data on the monthly amounts of carbonate-based raw materials charged to any continuous glass melting furnace use the best available estimate(s) of the parameter(s), based on all available process data or data used for accounting purposes, such as purchase records.

(b) For missing data on the mass fractions of carbonate-based minerals in the carbonate-based raw materials assume that the mass fraction of each carbonate based mineral is 1.0.

§ 98.146 Data reporting requirements.

In addition to the information required by § 98.3(c), each annual report must contain the information specified in paragraphs (a) and (b) of this section, as applicable.

(a) If a CEMS is used to measure CO_2 emissions, then you must report under this subpart the relevant information required under § 98.37 for the Tier 4 Calculation Methodology and the following information specified in paragraphs (a)(1) and (a)(2) of this section:

(1) Annual quantity of each carbonate-based raw material charged to each continuous glass melting furnace and for all furnaces combined (tons).

(2) Annual quantity of glass produced (tons).

(b) If a CEMS is not used to determine CO_2 emissions from continuous glass melting furnaces, and process CO_2 emissions are calculated according to the procedures specified in § 98.143(b), then you must report the following information as specified in paragraphs (b)(1) through (b)(9) of this section:

(1) Annual process emissions of CO_2 (metric tons) for each continuous glass melting furnace and for all furnaces combined.

(2) Annual quantity of each carbonate-based raw material charged (tons) to each continuous glass melting furnace and for all furnaces combined.

(3) Annual quantity of glass produced (tons) from each continuous glass melting furnace and from all furnaces combined.

(4) Carbonate-based mineral mass fraction (percentage, expressed as a decimal) for each carbonate-based raw material charged to a continuous glass melting furnace.

(5) Results of all tests used to verify the carbonate-based mineral mass fraction for each carbonate-based raw material charged to a continuous glass melting furnace, as specified in paragraphs (b)(5)(i) through (b)(5)(iii) of this section.

(i) Date of test.

(ii) Method(s) and any variations used in the analyses.

(iii) Mass fraction of each sample analyzed.

(6) The fraction of calcination achieved for each carbonate-based raw material, if a value other than 1.0 is used to calculate process mass emissions of CO_2.

(7) Method used to determine fraction of calcination (percentage, expressed as a decimal).

(8) Total number of continuous glass melting furnaces.

(9) The number of times in the reporting year that missing data procedures were followed to measure monthly quantities of carbonate-based raw materials any continuous glass melting furnace or mass fraction of the carbonate-based minerals (months).

§ 98.147 Records that must be retained.

In addition to the information required by § 98.3(g), you must retain the records listed in paragraphs (a), (b), and (c) of this section.

(a) If a CEMS is used to measure emissions, then you must retain the records required under § 98.37 for the Tier 4 Calculation Methodology and the following information specified in paragraphs (a)(1) and (a)(2) of this section:

(1) Monthly glass production rate for each continuous glass melting furnace (tons).

(2) Monthly amount of each carbonate-based raw material charged to each continuous glass melting furnace (tons).

(b) If process CO_2 emissions are calculated according to the procedures specified in § 98.143(b), you must retain the records in paragraphs (b)(1) through (b)(5) of this section.

(1) Monthly glass production rate for each continuous glass melting furnace (metric tons).

(2) Monthly amount of each carbonate-based raw material charged to each continuous glass melting furnace (metric tons).

(3) Data on carbonate-based mineral mass fractions provided by the raw material supplier for all raw materials consumed annually and included in calculating process emissions in Equation N–1 of this subpart.

(4) Results of all tests used to verify the carbonate-based mineral mass fraction for each carbonate-based raw material charged to a continuous glass melting furnace, including the data specified in paragraphs (b)(4)(i) through (b)(4)(v) of this section.

(i) Date of test.

(ii) Method(s), and any variations of the methods, used in the analyses.

(iii) Mass fraction of each sample analyzed.

(iv) Relevant calibration data for the instrument(s) used in the analyses.

(v) Name and address of laboratory that conducted the tests.

(5) The fraction of calcination achieved for each carbonate-based raw material (percentage, expressed as a decimal), if a value other than 1.0 is used to calculate process mass emissions of CO_2.

(c) All other documentation used to support the reported GHG emissions.

§ 98.148 Definitions.

All terms used in this subpart have the same meaning given in the Clean Air Act and subpart A of this part.

TABLE N–1 TO SUBPART N OF PART 98—CO_2 EMISSION FACTORS FOR CARBONATE-BASED RAW MATERIALS

Carbonate-based raw material—mineral	CO_2 emission factor [a]
Limestone—$CaCO_3$	0.440
Dolomite—$CaMg(CO_3)_2$	0.477
Sodium carbonate/soda ash—Na_2CO_3	0.415

[a] Emission factors in units of metric tons of CO_2 emitted per metric ton of carbonate-based raw material charged to the furnace.

Subpart O—HCFC–22 Production and HFC–23 Destruction

§ 98.150 Definition of the source category.

The HCFC–22 production and HFC–23 destruction source category consists of HCFC–22 production processes and HFC–23 destruction processes.

(a) An HCFC–22 production process produces HCFC–22 (chlorodifluoromethane, or $CHClF_2$) from chloroform ($CHCl_3$) and hydrogen fluoride (HF).

(b) An HFC–23 destruction process is any process in which HFC–23 undergoes destruction. An HFC–23 destruction

process may or may not be co-located with an HCFC–22 production process at the same facility.

§ 98.151 Reporting threshold.

You must report GHG emissions under this subpart if your facility contains an HCFC–22 production or HFC–23 destruction process and the facility meets the requirements of either § 98.2(a)(1) or (a)(2).

§ 98.152 GHGs to report.

(a) You must report under subpart C of this part (General Stationary Fuel Combustion Sources) the emissions of CO_2, CH_4, and N_2O from each stationary combustion unit following the requirements of subpart C.

(b) You must report HFC–23 emissions from HCFC–22 production processes and HFC–23 destruction processes.

§ 98.153 Calculating GHG emissions.

(a) The mass of HFC–23 generated from each HCFC–22 production process shall be estimated by using one of two methods, as applicable:

(1) Where the mass flow of the combined stream of HFC–23 and another reaction product (e.g., HCl) is measured, multiply the weekly (or more frequent) HFC–23 concentration measurement (which may be the average of more frequent concentration measurements) by the weekly (or more frequent) mass flow of the combined stream of HFC–23 and the other product. To estimate annual HFC–23 production, sum the weekly (or more frequent) estimates of the quantities of HFC–23 produced over the year. This calculation is summarized in Equation O–1 of this section:

$$G_{23} = \sum_{p=1}^{n} c_{23} * F_p * 10^{-3} \qquad \text{(Eq. O-1)}$$

Where:

G_{23} = Mass of HFC–23 generated annually (metric tons).

c_{23} = Fraction HFC–23 by weight in HFC–23/other product stream.

F_p = Mass flow of HFC–23/other product stream during the period p (kg).

p = Period over which mass flows and concentrations are measured.

n = Number of concentration and flow measurement periods for the year.

10^{-3} = Conversion factor from kilograms to metric tons.

(2) Where the mass of only a reaction product other than HFC–23 (either HCFC–22 or HCl) is measured, multiply the ratio of the weekly (or more frequent) measurement of the HFC–23 concentration and the weekly (or more frequent) measurement of the other product concentration by the weekly (or more frequent) mass produced of the other product. To estimate annual HFC–23 production, sum the weekly (or more frequent) estimates of the quantities of HFC–23 produced over the year. This calculation is summarized in Equation O–2 of this section, assuming that the other product is HCFC–22. If the other product is HCl, HCl may be substituted for HCFC–22 in Equations O–2 and O–3 of this section.

$$G_{23} = \sum_{p=1}^{n} \left(\frac{c_{23}}{c_{22}} \right) * P_{22} * 10^{-3} \qquad \text{(Eq. O-2)}$$

Where:

G_{23} = Mass of HFC–23 generated annually (metric tons).

c_{23} = Fraction HFC–23 by weight in HCFC–22/HFC–23 stream.

c_{22} = Fraction HCFC–22 by weight in HCFC–22/HFC–23 stream.

P_{22} = Mass of HCFC–22 produced over the period p (kg), calculated using Equation O–3 of this section.

p = Period over which masses and concentrations are measured.

n = Number of concentration and mass measurement periods for the year.

10^{-3} = Conversion factor from kilograms to metric tons.

(b) The mass of HCFC–22 produced over the period p shall be estimated by using Equation O–3 of this section:

$$P_{22} = LF * \left(O_{22} - U_{22} \right) \qquad \text{(Eq. O-3)}$$

Where:

P_{22} = Mass of HCFC–22 produced over the period p (kg).

O_{22} = mass of HCFC–22 that is measured coming out of the Production process over the period p (kg).

U_{22} = Mass of used HCFC–22 that is added to the production process upstream of the output measurement over the period p (kg).

LF = Factor to account for the loss of HCFC–22 upstream of the measurement. The value for LF shall be determined pursuant to § 98.154(e).

(c) For HCFC–22 production facilities that do not use a thermal oxidizer or that have a thermal oxidizer that is not directly connected to the HCFC–22 production equipment, HFC–23 emissions shall be estimated using Equation O–4 of this section:

$$E_{23} = G_{23} - \left(S_{23} + OD_{23} + D_{23} + I_{23}\right) \qquad \text{(Eq. O-4)}$$

Where:

E_{23} = Mass of HFC–23 emitted annually (metric tons).

G_{23} = Mass of HFC–23 generated annually (metric tons).

S_{23} = Mass of HFC–23 sent off site for sale annually (metric tons).

OD_{23} = Mass of HFC–23 sent off site for destruction (metric tons).

D_{23} = Mass of HFC–23 destroyed on site (metric tons).

I_{23} = Increase in HFC–23 inventory = HFC–23 in storage at end of year—HFC–23 in storage at beginning of year (metric tons).

(d) For HCFC–22 production facilities that use a thermal oxidizer connected to the HCFC–22 production equipment, HFC–23 emissions shall be estimated using Equation O–5 of this section:

$$E_{23} = E_L + E_{PV} + E_D \qquad \text{(Eq. O-5)}$$

Where:

E_{23} = Mass of HFC–23 emitted annually (metric tons).

E_L = Mass of HFC–23 emitted annually from equipment leaks, calculated using Equation O–6 of this section (metric tons).

E_{PV} = Mass of HFC–23 emitted annually from process vents, calculated using Equation O–7 of this section (metric tons).

E_D = Mass of HFC–23 emitted annually from thermal oxidizer (metric tons), calculated using Equation O–8 of this section.

(1) The mass of HFC–23 emitted annually from equipment leaks (for use in Equation O–5 of this section) shall be estimated by using Equation O–6 of this section:

$$E_L = \sum_{p=1}^{n} \sum_{t} c_{23} * \left(F_{Gt} * N_{Gt} + F_{Lt} * N_{Lt}\right) * 10^{-3} \qquad \text{(Eq. O-6)}$$

Where:

E_L = Mass of HFC–23 emitted annually from equipment leaks (metric tons).

c_{23} = Fraction HFC–23 by weight in the stream(s) in the equipment.

F_{Gt} = The applicable leak rate specified in Table O–1 of this subpart for each source of equipment type and service t with a screening value greater than or equal to 10,000 ppmv (kg/hr/source).

N_{Gt} = The number of sources of equipment type and service t with screening values greater than or equal to 10,000 ppmv as determined according to §98.154(i).

F_{Lt} = The applicable leak rate specified in Table O–1 of this subpart for each source of equipment type and service t with a screening value of less than 10,000 ppmv (kg/hr/source).

N_{Lt} = The number of sources of equipment type and service t with screening values less than 10,000 ppmv as determined according to §98.154(j).

p = One hour.

n = Number of hours during the year during which equipment contained HFC–23.

t = Equipment type and service as specified in Table O–1 of this subpart .

10^{-3} = Factor converting kg to metric tons.

(2) The mass of HFC–23 emitted annually from process vents (for use in Equation O–5 of this section) shall be estimated by using Equation O–7 of this section:

$$E_{PV} = \sum_{p=1}^{n} ER_T * \left(\frac{PR_p}{PR_T}\right) * l_p * 10^{-3} \qquad \text{(Eq. O-7)}$$

Where:

E_{PV} = Mass of HFC–23 emitted annually from process vents (metric tons).

ER_T = The HFC–23 emission rate from the process vents during the period of the most recent test (kg/hr).

PR_p = The HCFC–22 production rate during the period p (kg/hr).

PR_T = The HCFC–22 production rate during the most recent test period (kg/hr).

l_p = The length of the period p (hours).

10^{-3} = Factor converting kg to metric tons.

n = The number of periods in a year.

(3) The total mass of HFC–23 emitted from destruction devices shall be estimated by using Equation O–8 of this section:

$$E_D = F_D - D_{23} \qquad \text{(Eq. O-8)}$$

Where:

E_D = Mass of HFC–23 emitted annually from the destruction device (metric tons).

F_D = Mass of HFC–23 fed into the destruction device annually (metric tons).

D_{23} = Mass of HFC–23 destroyed annually (metric tons).

(4) For facilities that destroy HFC–23, the total mass of HFC–23 destroyed shall be estimated by using Equation O–9 of this section:

$$D_{23} = F_D * DE \qquad \text{(Eq. O-9)}$$

Where:

D_{23} = Mass of HFC–23 destroyed annually (metric tons).

F_D = Mass of HFC–23 fed into the destruction device annually (metric tons).

DE = Destruction Efficiency of the destruction device (fraction).

§ 98.154 Monitoring and QA/QC requirements.

These requirements apply to measurements that are reported under this subpart or that are used to estimate reported quantities pursuant to § 98.153.

(a) The concentrations (fractions by weight) of HFC–23 and HCFC–22 in the product stream shall be measured at least weekly using equipment and methods (e.g., gas chromatography) with an accuracy and precision of 5 percent or better at the concentrations of the process samples.

(b) The mass flow of the product stream containing the HFC–23 shall be measured at least weekly using weigh scales, flowmeters, or a combination of volumetric and density measurements with an accuracy and precision of 1.0 percent of full scale or better.

(c) The mass of HCFC–22 or HCl coming out of the production process shall be measured at least weekly using weigh scales, flowmeters, or a combination of volumetric and density measurements with an accuracy and precision of 1.0 percent of full scale or better.

(d) The mass of any used HCFC–22 added back into the production process upstream of the output measurement in paragraph (c) of this section shall be measured (when being added) using flowmeters, weigh scales, or a combination of volumetric and density measurements with an accuracy and precision of 1.0 percent of full scale or better. If the mass in paragraph (c) of this section is measured by weighing containers that include returned heels as well as newly produced fluorinated GHGs, the returned heels shall be considered used fluorinated HCFC–22 for purposes of this paragraph (d) of this section and § 98.153(b).

(e) The loss factor LF in Equation O–3 of this subpart for the mass of HCFC–22 produced shall have the value 1.015 or another value that can be demonstrated, to the satisfaction of the Administrator, to account for losses of HCFC–22 between the reactor and the point of measurement at the facility where production is being estimated.

(f) The mass of HFC–23 sent off site for sale shall be measured at least weekly (when being packaged) using flowmeters, weigh scales, or a combination of volumetric and density measurements with an accuracy and precision of 1.0 percent of full scale or better.

(g) The mass of HFC–23 sent off site for destruction shall be measured at

least weekly (when being packaged) using flowmeters, weigh scales, or a combination of volumetric and density measurements with an accuracy and precision of 1.0 percent of full scale or better. If the measured mass includes more than trace concentrations of materials other than HFC–23, the concentration of the fluorinated GHG shall be measured at least weekly using equipment and methods (e.g., gas chromatography) with an accuracy and precision of 5 percent or better at the concentrations of the process samples. This concentration (mass fraction) shall be multiplied by the mass measurement to obtain the mass of the HFC–23 sent to another facility for destruction.

(h) The masses of HFC–23 in storage at the beginning and end of the year shall be measured using flowmeters, weigh scales, or a combination of volumetric and density measurements with an accuracy and precision of 1.0 percent of full scale or better.

(i) The number of sources of equipment type t with screening values greater than or equal to 10,000 ppmv shall be determined using EPA Method 21 at 40 CFR part 60, appendix A–7, and defining a leak as follows:

(1) A leak source that could emit HFC–23, and

(2) A leak source at whose surface a concentration of fluorocarbons equal to or greater than 10,000 ppm is measured.

(j) The number of sources of equipment type t with screening values less than 10,000 ppmv shall be the difference between the number of leak sources of equipment type t that could emit HFC–23 and the number of sources of equipment type t with screening values greater than or equal to 10,000 ppmv as determined under paragraph (h) of this section.

(k) The mass of HFC–23 emitted from process vents shall be estimated at least monthly by incorporating the results of the most recent emissions test into Equation O–6 of this subpart. HCFC–22 production facilities that use a thermal oxidizer connected to the HCFC–22 production equipment shall conduct emissions tests at process vents at least once every five years or after significant changes to the process. Emissions tests shall be conducted in accordance with EPA Method 18 at 40 CFR part 60, appendix A–6, under conditions that are typical for the production process at the facility. The sensitivity of the tests shall be sufficient to detect an emission rate that would result in annual emissions of 200 kg of HFC–23 if sustained over one year.

(l) For purposes of Equation O–9 of this subpart, the destruction efficiency must be equated to the destruction efficiency determined during a new or previous performance test of the destruction device. HFC–23 destruction facilities shall conduct annual measurements of HFC–23 concentrations at the outlet of the thermal oxidizer in accordance with EPA Method 18 at 40 CFR part 60, appendix A–6. Three samples shall be taken under conditions that are typical for the production process and destruction device at the facility, and the average concentration of HFC–23 shall be determined. The sensitivity of the concentration measurement shall be sufficient to detect an outlet concentration equal to or less than the outlet concentration determined in the destruction efficiency performance test. If the concentration measurement indicates that the HFC–23 concentration is less than or equal to that measured during the performance test that is the basis for the destruction efficiency, continue to use the previously determined destruction efficiency. If the concentration measurement indicates that the HFC–23 concentration is greater than that measured during the performance test that is the basis for the destruction efficiency, facilities shall either:

(1) Substitute the higher HFC–23 concentration for that measured during the destruction efficiency performance test and calculate a new destruction efficiency, or

(2) Estimate the mass emissions of HFC–23 from the destruction device based on the measured HFC–23 concentration and volumetric flow rate determined by measurement of volumetric flow rate using EPA Method 2, 2A, 2C,2D, or 2F at 40 CFR part 60, appendix A–1, or Method 26 at 40 CFR part 60, appendix A–2. Determine the mass rate of HFC–23 into the destruction device by measuring the HFC–23

concentration and volumetric flow rate at the inlet or by a metering device for HFC–23 sent to the device. Determine a new destruction efficiency based on the mass flow rate of HFC–23 into and out of the destruction device.

(m) HCFC–22 production facilities shall account for HFC–23 generation and emissions that occur as a result of startups, shutdowns, and malfunctions, either recording HFC–23 generation and emissions during these events, or documenting that these events do not result in significant HFC–23 generation and/or emissions.

(n) The mass of HFC–23 fed into the destruction device shall be measured at least weekly using flow meters, weigh scales, or a combination of volumetric and density measurements with an accuracy and precision of 1.0 percent of full scale or better. If the measured mass includes more than trace concentrations of materials other than HFC–23, the concentrations of the HFC–23 shall be measured at least weekly using equipment and methods (e.g., gas chromatography) with an accuracy and precision of 5 percent or better at the concentrations of the process samples. This concentration (mass fraction) shall be multiplied by the mass measurement to obtain the mass of the HFC–23 destroyed.

(o) In their estimates of the mass of HFC–23 destroyed, HFC–23 destruction facilities shall account for any temporary reductions in the destruction efficiency that result from any startups, shutdowns, or malfunctions of the destruction device, including departures from the operating conditions defined in state or local permitting requirements and/or oxidizer manufacturer specifications.

(p) Calibrate all flow meters, weigh scales, and combinations of volumetric and density measures using NIST-traceable standards and suitable methods published by a consensus standards organization (e.g., ASTM, ASME, ISO, or others). Recalibrate all flow meters, weigh scales, and combinations of volumetric and density measures at the minimum frequency specified by the manufacturer.

(q) All gas chromatographs used to determine the concentration of HFC–23 in process streams shall be calibrated at least monthly through analysis of certified standards (or of calibration gases prepared from a high-concentration certified standard using a gas dilution system that meets the requirements specified in Method 205 at 40 CFR part 51, appendix M) with known HFC–23 concentrations that are in the same range (fractions by mass) as the process samples.

§ 98.155 Procedures for estimating missing data.

(a) A complete record of all measured parameters used in the GHG emissions calculations is required. Therefore, whenever a quality-assured value of a required parameter is unavailable (e.g., if a meter malfunctions during unit operation or if a required process sample is not taken), a substitute data value for the missing parameter shall be used in the calculations, according to the following requirements:

(1) For each missing value of the HFC–23 or HCFC–22 concentration, the substitute data value shall be the arithmetic average of the quality-assured values of that parameter immediately preceding and immediately following the missing data incident. If, for a particular parameter, no quality-assured data are available prior to the missing data incident, the substitute data value shall be the first quality-assured value obtained after the missing data period.

(2) For each missing value of the product stream mass flow or product mass, the substitute value of that parameter shall be a secondary product measurement where such a measurement is available. If that measurement is taken significantly downstream of the usual mass flow or mass measurement (e.g., at the shipping dock rather than near the reactor), the measurement shall be multiplied by 1.015 to compensate for losses. Where a secondary mass measurement is not available, the substitute value of the parameter shall be an estimate based on a related parameter. For example, if a flowmeter measuring the mass fed into a destruction device is rendered inoperable, then the mass fed into the destruction device may be estimated using the production rate and the previously observed relationship between

the production rate and the mass flow rate into the destruction device.

§ 98.156 Data reporting requirements.

(a) In addition to the information required by § 98.3(c), the HCFC–22 production facility shall report the following information at the facility level:

(1) Annual mass of HCFC–22 produced in metric tons.

(2) Loss Factor used to account for the loss of HCFC– 22 upstream of the measurement.

(3) Annual mass of reactants fed into the process in metric tons of reactant.

(4) The mass (in metric tons) of materials other than HCFC–22 and HFC–23 (i.e., unreacted reactants, HCl and other by-products) that occur in more than trace concentrations and that are permanently removed from the process.

(5) The method for tracking startups, shutdowns, and malfunctions and HFC–23 generation/emissions during these events.

(6) The names and addresses of facilities to which any HFC–23 was sent for destruction, and the quantities of HFC–23 (metric tons) sent to each.

(7) Annual mass of the HFC–23 generated in metric tons.

(8) Annual mass of any HFC–23 sent off site for sale in metric tons.

(9) Annual mass of any HFC–23 sent off site for destruction in metric tons.

(10) Mass of HFC–23 in storage at the beginning and end of the year, in metric tons.

(11) Annual mass of HFC–23 emitted in metric tons.

(12) Annual mass of HFC–23 emitted from equipment leaks in metric tons.

(13) Annual mass of HFC–23 emitted from process vents in metric tons.

(b) In addition to the information required by § 98.3(c), facilities that destroy HFC–23 shall report the following for each HFC–23 destruction process:

(1) Annual mass of HFC–23 fed into the thermal oxidizer.

(2) Annual mass of HFC–23 destroyed.

(3) Annual mass of HFC–23 emitted from the thermal oxidizer.

(c) Each HFC–23 destruction facility shall report the results of the facility's annual HFC–23 concentration measurements at the outlet of the destruction device, including:

(1) Flow rate of HFC–23 being fed into the destruction device in kg/hr.

(2) Concentration (mass fraction) of HFC–23 at the outlet of the destruction device.

(3) Flow rate at the outlet of the destruction device in kg/hr.

(d) Emission rate calculated from paragraphs (c)(2) and (3) of this section in kg/hr.

(e) HFC–23 destruction facilities shall submit a one-time report including the following information for each the destruction process:

(1) Destruction efficiency (DE).

(2) The methods used to determine destruction efficiency.

(3) The methods used to record the mass of HFC–23 destroyed.

(4) The name of other relevant federal or state regulations that may apply to the destruction process.

(5) If any changes are made that affect HFC–23 destruction efficiency or the methods used to record volume destroyed, then these changes must be reflected in a revision to this report. The revised report must be submitted to EPA within 60 days of the change.

§ 98.157 Records that must be retained.

(a) In addition to the data required by § 98.3(g), HCFC–22 production facilities shall retain the following records:

(1) The data used to estimate HFC–23 emissions.

(2) Records documenting the initial and periodic calibration of the gas chromatographs, weigh scales, volumetric and density measurements, and flowmeters used to measure the quantities reported under this rule, including the industry standards or manufacturer directions used for calibration pursuant to § 98.154(p) and (q).

(b) In addition to the data required by § 98.3(g), the HFC–23 destruction facilities shall retain the following records:

(1) Records documenting their one-time and annual reports in § 98.156(b) through (d).

(2) Records documenting the initial and periodic calibration of the gas chromatographs, weigh scales, volumetric and density measurements, and

flowmeters used to measure the quantities reported under this subpart, including the industry standard practice or manufacturer directions used for calibration pursuant to § 98.154(p) and (q).

§ 98.158 Definitions.

All terms used in this subpart have the same meaning given in the Clean Air Act and subpart A of this part.

TABLE O–1 TO SUBPART O OF PART 98—EMISSION FACTORS FOR EQUIPMENT LEAKS

Equipment type	Service	Emission factor (kg/hr/source)	
		≥10,000 ppmv	<10,000 ppmv
Valves	Gas	0.0782	0.000131
Valves	Light liquid	0.0892	0.000165
Pump seals	Light liquid	0.243	0.00187
Compressor seals	Gas	1.608	0.0894
Pressure relief valves	Gas	1.691	0.0447
Connectors	All	0.113	0.0000810
Open-ended lines	All	0.01195	0.00150

Subpart P—Hydrogen Production

§ 98.160 Definition of the source category.

(a) A hydrogen production source category consists of facilities that produce hydrogen gas sold as a product to other entities.

(b) This source category comprises process units that produce hydrogen by reforming, gasification, oxidation, reaction, or other transformations of feedstocks.

(c) This source category includes merchant hydrogen production facilities located within a petroleum refinery if they are not owned by, or under the direct control of, the refinery owner and operator.

§ 98.161 Reporting threshold.

You must report GHG emissions under this subpart if your facility contains a hydrogen production process and the facility meets the requirements of either § 98.2(a)(1) or (a)(2).

§ 98.162 GHGs to report.

You must report:

(a) CO_2 process emissions from each hydrogen production process unit.

(b) CO_2, CH_4 and N_2O combustion emissions from each hydrogen production process unit. You must calculate and report these combustion emissions under subpart C of this part (General Stationary Fuel Combustion Sources) by following the requirements of subpart C.

(c) CO_2, CH_4, and N_2O emissions from each stationary combustion unit other than hydrogen production process units. You must calculate and report these emissions under subpart C of this part (General Stationary Fuel Combustion Sources) by following the requirements of subpart C.

(d) For CO_2 collected and transferred off site, you must follow the requirements of subpart PP of this part.

§ 98.163 Calculating GHG emissions.

You must calculate and report the annual process CO_2 emissions from each hydrogen production process unit using the procedures specified in either paragraph (a) or (b) of this section.

(a) *Continuous Emissions Montoring Systems (CEMS).* Calculate and report under this subpart the process CO_2 emissions by operating and maintaining CEMS according to the Tier 4 Calculation Methodology specified in § 98.33(a)(4) and all associated requirements for Tier 4 in subpart C of this part (General Stationary Fuel Combustion Sources).

(b) *Fuel and feedstock material balance approach.* Calculate and report process CO_2 emissions as the sum of the annual emissions associated with each fuel and feedstock used for hydrogen production by following paragraphs (b)(1) through (b)(3) of this section.

(1) *Gaseous fuel and feedstock.* You must calculate the annual CO_2 process emissions from gaseous fuel and feedstock according to Equation P–1 of this section:

$$CO_2 = \left(\sum_{n=1}^{k} \frac{44}{12} * Fdstk_n * CC_n * \frac{MW}{MVC} \right) * 0.001 \qquad \text{(Eq. P-1)}$$

Where:

CO_2 = Annual CO_2 process emissions arising from fuel and feedstock consumption (metric tons/yr).

$Fdstk_n$ = Volume of the gaseous fuel and feedstock used in month n (scf (at standard conditions of 68 °F and atmospheric pressure) of fuel and feedstock).

CC_n = Average carbon content of the gaseous fuel and feedstock, from the results of one or more analyses for month n (kg carbon per kg of fuel and feedstock).

MW = Molecular weight of the gaseous fuel and feedstock (kg/kg-mole).

MVC = Molar volume conversion factor (849.5 scf per kg-mole at standard conditions).

k = Months in the year.

44/12 = Ratio of molecular weights, CO_2 to carbon. 0.001 = Conversion factor from kg to metric tons.

(2) *Liquid fuel and feedstock.* You must calculate the annual CO_2 process emissions from liquid fuel and feedstock according to Equation P–2 of this section:

$$CO_2 = \left(\sum_{n=1}^{k} \frac{44}{12} * Fdstk_n * CC_n \right) * 0.001 \qquad \text{(Eq. P-2)}$$

Where:

CO_2 = Annual CO_2 emissions arising from fuel and feedstock consumption (metric tons/yr).

$Fdstk_n$ = Volume of the liquid fuel and feedstock used in month n (gallons of fuel and feedstock).

CC_n = Average carbon content of the liquid fuel and feedstock, from the results of one or more analyses for month n (kg carbon per gallon of fuel and feedstock).

k = Months in the year.

44/12 = Ratio of molecular weights, CO_2 to carbon.

0.001 = Conversion factor from kg to metric tons.

(3) *Solid fuel and feedstock.* You must calculate the annual CO_2 process emissions from solid fuel and feedstock according to Equation P–3 of this section:

$$CO_2 = \left(\sum_{n=1}^{k} \frac{44}{12} * Fdstk_n * CC_n \right) * 0.001 \qquad \text{(Eq. P-3)}$$

Where:

CO_2 = Annual CO_2 emissions from fuel and feedstock consumption in metric tons per month (metric tons/yr).

$Fdstk_n$ = Mass of solid fuel and feedstock used in month n (kg of fuel and feedstock).

CC_n = Average carbon content of the solid fuel and feedstock, from the results of one or more analyses for month n (kg carbon per kg of fuel and feedstock).

k = Months in the year.

44/12 = Ratio of molecular weights, CO_2 to carbon.

0.001 = Conversion factor from kg to metric tons.

(c) If GHG emissions from a hydrogen production process unit are vented

through the same stack as any combustion unit or process equipment that reports CO_2 emissions using a CEMS that complies with the Tier 4 Calculation Methodology in subpart C of this part (General Stationary Fuel Combustion Sources), then the calculation methodology in paragraph (b) of this section shall not be used to calculate process emissions. The owner or operator shall report under this subpart the combined stack emissions according to the Tier 4 Calculation Methodology in § 98.33(a)(4) and all associated requirements for Tier 4 in subpart C of this part (General Stationary Fuel Combustion Sources).

§ 98.164 Monitoring and QA/QC requirements.

The GHG emissions data for hydrogen production process units must be quality-assured as specified in paragraphs (a) or (b) of this section, as appropriate for each process unit:

(a) If a CEMS is used to measure GHG emissions, then the facility must comply with the monitoring and QA/QC procedures specified in § 98.34(c).

(b) If a CEMS is not used to measure GHG emissions, then you must:

(1) Calibrate all oil and gas flow meters (except for gas billing meters), solids weighing equipment, and oil tank drop measurements (if used to determine liquid fuel and feedstock use volume) according to the calibration accuracy requirements in § 98.3(i) of this part.

(2) Determine the carbon content and the molecular weight annually of standard gaseous hydrocarbon fuels and feedstocks having consistent composition (e.g., natural gas). For other gaseous fuels and feedstocks (e.g., biogas, refinery gas, or process gas), weekly sampling and analysis is required to determine the carbon content and molecular weight of the fuel and feedstock.

(3) Determine the carbon content of fuel oil, naphtha, and other liquid fuels and feedstocks at least monthly, except annually for standard liquid hydrocarbon fuels and feedstocks having consistent composition, or upon delivery for liquid fuels delivered by bulk transport (e.g., by truck or rail).

(4) Determine the carbon content of coal, coke, and other solid fuels and feedstocks at least monthly, except annually for standard solid hydrocarbon fuels and feedstocks having consistent composition, or upon delivery for solid fuels delivered by bulk transport (e.g., by truck or rail).

(5) You must use the following applicable methods to determine the carbon content for all fuels and feedstocks, and molecular weight of gaseous fuels and feedstocks.

(i) ASTM D1945–03 Standard Test Method for Analysis of Natural Gas by Gas Chromatography (incorporated by reference, *see* § 98.7).

(ii) ASTM D1946–90 (Reapproved 2006), Standard Practice for Analysis of Reformed Gas by Gas Chromatography (incorporated by reference, *see* § 98.7).

(iii) ASTM D2013–07 Standard Practice of Preparing Coal Samples for Analysis (incorporated by reference, *see* § 98.7).

(iv) ASTM D2234/D2234M–07 Standard Practice for Collection of a Gross Sample of Coal (incorporated by reference, *see* § 98.7).

(v) ASTM D2597–94 (Reapproved 2004) Standard Test Method for Analysis of Demethanized Hydrocarbon Liquid Mixtures Containing Nitrogen and Carbon Dioxide by Gas Chromatography (incorporated by reference, *see* § 98.7).

(vi) ASTM D3176–89 (Reapproved 2002), Standard Practice for Ultimate Analysis of Coal and Coke (incorporated by reference, *see* § 98.7).

(vii) ASTM D3238–95 (Reapproved 2005), Standard Test Method for Calculation of Carbon Distribution and Structural Group Analysis of Petroleum Oils by the n-d-M Method (incorporated by reference, *see* § 98.7).

(viii) ASTM D4057–06 Standard Practice for Manual Sampling of Petroleum and Petroleum Products (incorporated by reference, *see* § 98.7).

(ix) ASTM D4177–95 (Reapproved 2005) Standard Practice for Automatic Sampling of Petroleum and Petroleum Products (incorporated by reference, *see* § 98.7).

(x) ASTM D5291–02 (Reapproved 2007), Standard Test Methods for Instrumental Determination of Carbon, Hydrogen, and Nitrogen in Petroleum

Products and Lubricants (incorporated by reference, *see* § 98.7).

(xi) ASTM D5373–08 Standard Test Methods for Instrumental Determination of Carbon, Hydrogen, and Nitrogen in Laboratory Samples of Coal (incorporated by reference, *see* § 98.7).

(xii) ASTM D6609–08 Standard Guide for Part-Stream Sampling of Coal (incorporated by reference, see § 98.7).

(xiii) ASTM D6883–04 Standard Practice for Manual Sampling of Stationary Coal from Railroad Cars, Barges, Trucks, or Stockpiles (incorporated by reference, *see* § 98.7).

(xiv) ASTM D7430–08ae1 Standard Practice for Mechanical Sampling of Coal (incorporated by reference, *see* § 98.7).

(xv) ASTM UOP539–97 Refinery Gas Analysis by Gas Chromatography (incorporated by reference, *see* § 98.7).

(xvi) GPA 2261–00 Analysis for Natural Gas and Similar Gaseous Mixtures by Gas Chromatography (incorporated by reference, *see* § 98.7).

(xvii) ISO 3170: Petroleum Liquids—Manual sampling—Third Edition (incorporated by reference, *see* § 98.7).

(xviii) ISO 3171: Petroleum Liquids—Automatic pipeline sampling—Second Edition (incorporated by reference, *see* § 98.7).

(c) For units using the calculation methodologies described in this section, the records required under § 98.3(g) must include both the company records and a detailed explanation of how company records are used to estimate the following:

(1) Fuel and feedstock consumption, when solid fuel and feedstock is combusted and a CEMS is not used to measure GHG emissions.

(2) Fossil fuel consumption, when, pursuant to § 98.33(e), the owner or operator of a unit that uses CEMS to quantify CO_2 emissions and that combusts both fossil and biogenic fuels separately reports the biogenic portion of the total annual CO_2 emissions.

(3) Sorbent usage, if the methodology in § 98.33(d) is used to calculate CO_2 emissions from sorbent.

(d) The owner or operator must document the procedures used to ensure the accuracy of the estimates of fuel and feedstock usage and sorbent usage (as applicable) in paragraph (b) of this section, including, but not limited to, calibration of weighing equipment, fuel and feedstock flow meters, and other measurement devices. The estimated accuracy of measurements made with these devices must also be recorded, and the technical basis for these estimates must be provided.

§ 98.165 Procedures for estimating missing data.

A complete record of all measured parameters used in the GHG emissions calculations is required. Therefore, whenever a quality-assured value of a required parameter is unavailable (e.g., if a meter malfunctions during unit operation), a substitute data value for the missing parameter must be used in the calculations as specified in paragraphs (a), (b), and (c) of this section:

(a) For each missing value of the monthly fuel and feedstock consumption, the substitute data value must be the best available estimate of the fuel and feedstock consumption, based on all available process data (e.g., hydrogen production, electrical load, and operating hours). You must document and keep records of the procedures used for all such estimates.

(b) For each missing value of the carbon content or molecular weight of the fuel and feedstock, the substitute data value must be the arithmetic average of the quality-assured values of carbon contents or molecular weight of the fuel and feedstock immediately preceding and immediately following the missing data incident. If no quality-assured data on carbon contents or molecular weight of the fuel and feedstock are available prior to the missing data incident, the substitute data value must be the first quality-assured value for carbon contents or molecular weight of the fuel and feedstock obtained after the missing data period. You must document and keep records of the procedures used for all such estimates.

(c) For missing CEMS data, you must use the missing data procedures in § 98.35.

§ 98.166 Data reporting requirements.

In addition to the information required by § 98.3(c), each annual report must contain the information specified

in paragraphs (a) or (b) of this section, as appropriate:

(a) If a CEMS is used to measure CO_2 emissions, then you must report the relevant information required under § 98.36 for the Tier 4 Calculation Methodology and the following information in this paragraph (a):

(1) Unit identification number and annual CO_2 process emissions.

(2) Annual quantity of hydrogen produced (metric tons) for each process unit and for all units combined.

(3) Annual quantity of ammonia produced (metric tons), if applicable, for each process unit and for all units combined.

(b) If a CEMS is not used to measure CO_2 emissions, then you must report the following information for each hydrogen production process unit:

(1) Unit identification number and annual CO_2 process emissions.

(2) Monthly consumption of each fuel and feedstock used for hydrogen production and its type (scf of gaseous fuels and feedstocks, gallons of liquid fuels and feedstocks, kg of solid fuels and feedstocks).

(3) Annual quantity of hydrogen produced (metric tons).

(4) Annual quantity of ammonia produced, if applicable (metric tons).

(5) Monthly analyses of carbon content for each fuel and feedstock used in hydrogen production (kg carbon/kg of gaseous and solid fuels and feedstocks, (kg carbon per gallon of liquid fuels and feedstocks).

(6) Monthly analyses of the molecular weight of gaseous fuels and feedstocks (kg/kg-mole) used, if any.

(c) Quarterly quantity of CO_2 collected and transferred off site in either gas, liquid, or solid forms (kg), following the requirements of subpart PP of this part.

(d) Annual quantity of carbon other than CO_2 collected and transferred off site in either gas, liquid, or solid forms (kg carbon).

§ 98.167 Records that must be retained.

In addition to the information required by § 98.3(g), you must retain the records specified in paragraphs (a) through (b) of this section for each hydrogen production facility.

(a) If a CEMS is used to measure CO_2 emissions, then you must retain under this subpart the records required for the Tier 4 Calculation Methodology in § 98.37.

(b) If a CEMS is not used to measure CO_2 emissions, then you must retain records of all analyses and calculations conducted as listed in §§ 98.166(b), (c), and (d).

§ 98.168 Definitions.

All terms used in this subpart have the same meaning given in the Clean Air Act and subpart A of this part.

Subpart Q—Iron and Steel Production

§ 98.170 Definition of the source category.

The iron and steel production source category includes facilities with any of the following processes: taconite iron ore processing, integrated iron and steel manufacturing, cokemaking not colocated with an integrated iron and steel manufacturing process, and electric arc furnace (EAF) steelmaking not colocated with an integrated iron and steel manufacturing process. Integrated iron and steel manufacturing means the production of steel from iron ore or iron ore pellets. At a minimum, an integrated iron and steel manufacturing process has a basic oxygen furnace for refining molten iron into steel. Each cokemaking process and EAF process located at a facility with an integrated iron and steel manufacturing process is part of the integrated iron and steel manufacturing facility.

§ 98.171 Reporting threshold.

You must report GHG emissions under this subpart if your facility contains an iron and steel production process and the facility meets the requirements of either § 98.2(a)(1) or (2).

§ 98.172 GHGs to report.

(a) You must report under subpart C of this part (General Stationary Fuel Combustion Sources) the emissions of CO_2, CH_4, and N_2O from each stationary combustion unit following the requirements of subpart C except for flares. Stationary combustion units include,

but are not limited to, by-product recovery coke oven battery combustion stacks, blast furnace stoves, boilers, process heaters, reheat furnaces, annealing furnaces, flame suppression, ladle reheaters, and other miscellaneous combustion sources.

(b) You must report CO_2 emissions from flares according to the procedures in § 98.253(b)(1) of subpart Y (Petroleum Refineries) of this part except you must use the default CO_2 emission factors for coke oven gas and blast furnace gas from Table C–1 of subpart C in Equation Y–1 of subpart Y of this part. You must report CH_4 and N_2O emissions from flares according to the requirements in § 98.33(c)(2) using the emission factors for coke oven gas and blast furnace gas in Table C–2 of subpart C of this part.

(c) You must report process CO_2 emissions from each taconite indurating furnace; basic oxygen furnace; non-recovery coke oven battery combustion stack; coke pushing process; sinter process; EAF; argon-oxygen decarburization vessel; and direct reduction furnace by following the procedures in this subpart.

§ 98.173 Calculating GHG emissions.

You must calculate and report the annual process CO_2 emissions from each taconite indurating furnace, basic oxygen furnace, non-recovery coke oven battery, sinter process, EAF, argon-oxygen decarburization vessel, and direct reduction furnace using the procedures in either paragraph (a) or (b) of this section. Calculate and report the annual process CO_2 emissions from the coke pushing process according to paragraph (c) of this section.

(a) Calculate and report under this subpart the process CO_2 emissions by operating and maintaining CEMS according to the Tier 4 Calculation Methodology in § 98.33(a)(4) and all associated requirements for Tier 4 in subpart C of this part (General Stationary Fuel Combustion Sources).

(b) Calculate and report under this subpart the process CO_2 emissions using the procedure in paragraph (b)(1) or (b)(2) of this section.

(1) *Carbon mass balance method.* Calculate the annual mass emissions of CO_2 for the process as specified in paragraphs (b)(1)(i) through (b)(1)(vii) of this section. The calculations are based on the annual mass of inputs and outputs to the process and an annual analysis of the respective weight fraction of carbon as determined according to the procedures in § 98.174(b). If you have a process input or output other than CO_2 in the exhaust gas that contains carbon that is not included in Equations Q–1 through Q–7 of this section, you must account for the carbon and mass rate of that process input or output in your calculations according to the procedures in § 98.174(b)(5).

(i) For taconite indurating furnaces, estimate CO_2 emissions using Equation Q–1 of this section.

$$CO_2 = \frac{44}{12} * \left[(F_s) * (C_{sf}) + (F_g) * (C_{gf}) * \frac{MW}{MVC} * 0.001 + (F_l) * (C_{lf}) * 0.001 + (O) * (C_o) - (P) * (C_p) - (R) * (C_R) \right] \quad \text{(Eq. Q-1)}$$

Where:

CO_2 = Annual CO_2 mass emissions from the taconite indurating furnace (metric tons).

44/12 = Ratio of molecular weights, CO_2 to carbon.

(F_s) = Annual mass of the solid fuel combusted (metric tons).

(C_{sf}) = Carbon content of the solid fuel, from the fuel analysis (percent by weight, expressed as a decimal fraction, e.g., 95% = 0.95).

(F_g) = Annual volume of the gaseous fuel combusted (scf).

(C_{gf}) = Average carbon content of the gaseous fuel, from the fuel analysis results (kg C per kg of fuel).

MW = Molecular weight of the gaseous fuel (kg/kg-mole).

MVC = Molar volume conversion factor (849.5 scf per kg-mole at standard conditions).

0.001 = Conversion factor from kg to metric tons.

(F_l) = Annual volume of the liquid fuel combusted (gallons).

(C_{lf}) = Carbon content of the liquid fuel, from the fuel analysis results (kg C per gallon of fuel).

(O) = Annual mass of greenball (taconite) pellets fed to the furnace (metric tons).

(C_0) = Carbon content of the greenball (taconite) pellets, from the carbon analysis results (percent by weight, expressed as a decimal fraction).

(P) = Annual mass of fired pellets produced by the furnace (metric tons).

(C_p) = Carbon content of the fired pellets, from the carbon analysis results (percent by weight, expressed as a decimal fraction).

(R) = Annual mass of air pollution control residue collected (metric tons).

(C_R) = Carbon content of the air pollution control residue, from the carbon analysis results (percent by weight, expressed as a decimal fraction).

(ii) For basic oxygen process furnaces, estimate CO_2 emissions using Equation Q–2 of this section.

$$CO_2 = \frac{44}{12} * \left[(Iron) * (C_{Iron}) + (Scrap) * (C_{Scrap}) + (Flux) * (C_{Flux}) + (Carbon) * (C_{Carbon}) - (Steel) * (C_{Steel}) - (Slag) * (C_{Slag}) - (R) * (C_R) \right] \quad \text{(Eq. Q-2)}$$

Where:

CO_2 = Annual CO_2 mass emissions from the basic oxygen furnace (metric tons).

44/12 = Ratio of molecular weights, CO_2 to carbon.

(Iron) = Annual mass of molten iron charged to the furnace (metric tons).

(C_{Iron}) = Carbon content of the molten iron, from the carbon analysis results (percent by weight, expressed as a decimal fraction).

(Scrap) = Annual mass of ferrous scrap charged to the furnace (metric tons).

(C_{Scrap}) = Carbon content of the ferrous scrap, from the carbon analysis results (percent by weight, expressed as a decimal fraction).

(Flux) = Annual mass of flux materials (e.g., limestone, dolomite) charged to the furnace (metric tons).

(C_{Flux}) = Carbon content of the flux materials, from the carbon analysis results (percent by weight, expressed as a decimal fraction).

(Carbon) = Annual mass of carbonaceous materials (e.g., coal, coke) charged to the furnace (metric tons).

(C_{Carbon}) = Carbon content of the carbonaceous materials, from the carbon analysis results (percent by weight, expressed as a decimal fraction).

(Steel) = Annual mass of molten raw steel produced by the furnace (metric tons).

(C_{Steel}) = Carbon content of the steel, from the carbon analysis results (percent by weight, expressed as a decimal fraction).

(Slag) = Annual mass of slag produced by the furnace (metric tons).

(C_{Slag}) = Carbon content of the slag, from the carbon analysis (percent by weight, expressed as a decimal fraction).

(R) = Annual mass of air pollution control residue collected (metric tons).

(C_R) = Carbon content of the air pollution control residue, from the carbon analysis results (percent by weight, expressed as a decimal fraction).

(iii) For non-recovery coke oven batteries, estimate CO_2 emissions using Equation Q–3 of this section.

$$CO_2 = \frac{44}{12} * \left[(Coal) * (C_{Coal}) - (Coke) * (C_{Coke}) - (R) * (C_R) \right] \quad \text{(Eq. Q-3)}$$

Where:

CO_2 = Annual CO_2 mass emissions from the non-recovery coke oven battery (metric tons).

44/12 = Ratio of molecular weights, CO_2 to carbon.

(Coal) = Annual mass of coal charged to the battery (metric tons).

(C_{Coal}) = Carbon content of the coal, from the carbon analysis results (percent by weight, expressed as a decimal fraction).

(Coke) = Annual mass of coke produced by the battery (metric tons).

(C_{Coke}) = Carbon content of the coke, from the carbon analysis results (percent by weight, expressed as a decimal fraction).

(R) = Annual mass of air pollution control residue collected (metric tons).

(C_R) = Carbon content of the air pollution control residue, from the carbon analysis results (percent by weight, expressed as a decimal fraction).

(iv) For sinter processes, estimate CO_2 emissions using Equation Q–4 of this section.

$$CO_2 = \frac{44}{12} * \left[(F_g) * (C_{gf}) * \frac{MW}{MVC} * 0.001 + (Feed) * (C_{Feed}) - (\text{Sinter}) * (C_{Sinter}) - (R) * (C_R) \right] \quad \text{(Eq. Q-4)}$$

Where:

CO_2 = Annual CO_2 mass emissions from the sinter process (metric tons).

44/12 = Ratio of molecular weights, CO_2 to carbon.

(F_g) = Annual volume of the gaseous fuel combusted (scf).

(C_{gf}) = Carbon content of the gaseous fuel, from the fuel analysis results (kg C per kg of fuel).

MW = Molecular weight of the gaseous fuel (kg/kg-mole).

MVC = Molar volume conversion factor (849.5 scf per kg-mole at standard conditions).

0.001 = Conversion factor from kg to metric tons.

(Feed) = Annual mass of sinter feed material (metric tons).

(C_{Feed}) = Carbon content of the mixed sinter feed materials that form the bed entering the sintering machine, from the carbon analysis results (percent by weight, expressed as a decimal fraction).

(Sinter) = Annual mass of sinter produced (metric tons).

(C_{Sinter}) = Carbon content of the sinter pellets, from the carbon analysis results (percent by weight, expressed as a decimal fraction).

(R) = Annual mass of air pollution control residue collected (metric tons).

(C_R) = Carbon content of the air pollution control residue, from the carbon analysis results (percent by weight, expressed as a decimal fraction).

(v) For EAFs, estimate CO_2 emissions using Equation Q–5 of this section.

$$CO_2 = \frac{44}{12} * \left[(Iron) * (C_{Iron}) + (Scrap) * (C_{Scrap}) + (Flux) * (C_f) + (Electrode) * (C_{Electrode}) + (Carbon) * (C_c) - (Steel) * (C_{Steel}) - (Slag) * (C_{Slag}) - (R) * (C_R) \right. \quad \text{(Eq. Q-5)}$$

Where:

CO_2 = Annual CO_2 mass emissions from the EAF (metric tons).

44/12 = Ratio of molecular weights, CO_2 to carbon.

(Iron) = Annual mass of direct reduced iron (if any) charged to the furnace (metric tons).

(C_{Iron}) = Carbon content of the direct reduced iron, from the carbon analysis results (percent by weight, expressed as a decimal fraction).

(Scrap) = Annual mass of ferrous scrap charged to the furnace (metric tons).

(C_{Scrap}) = Carbon content of the ferrous scrap, from the carbon analysis results (percent by weight, expressed as a decimal fraction).

(Flux) = Annual mass of flux materials (e.g., limestone, dolomite) charged to the furnace (metric tons).

(C_{Flux}) = Carbon content of the flux materials, from the carbon analysis results (percent by weight, expressed as a decimal fraction).

(Electrode) = Annual mass of carbon electrode consumed (metric tons).

($C_{Electrode}$) = Carbon content of the carbon electrode, from the carbon analysis results (percent by weight, expressed as a decimal fraction).

(Carbon) = Annual mass of carbonaceous materials (e.g., coal, coke) charged to the furnace (metric tons).

(C_{Carbon}) = Carbon content of the carbonaceous materials, from the carbon analysis results (percent by weight, expressed as a decimal fraction).

(Steel) = Annual mass of molten raw steel produced by the furnace (metric tons).

(C_{Steel}) = Carbon content of the steel, from the carbon analysis results (percent by weight, expressed as a decimal fraction).

(Slag) = Annual mass of slag produced by the furnace (metric tons).

(C_{Slag}) = Carbon content of the slag, from the carbon analysis results (percent by weight, expressed as a decimal fraction).

(R) = Annual mass of air pollution control residue collected (metric tons).

(C_R) = Carbon content of the air pollution control residue, from the carbon analysis results (percent by weight, expressed as a decimal fraction).

(vi) For argon-oxygen decarburization vessels, estimate CO_2 emissions using Equation Q–6 of this section.

$$CO_2 = \frac{44}{12} * (Steel) * \left[(C_{Steelin}) - (C_{Steelout}) \right] - (R) * (C_R) \qquad \text{(Eq. Q-6)}$$

Where:

CO_2 = Annual CO_2 mass emissions from the argon-oxygen decarburization vessel (metric tons).

44/12 = Ratio of molecular weights, CO_2 to carbon.

(Steel) = Annual mass of molten steel charged to the vessel (metric tons).

($C_{Steelin}$) = Carbon content of the molten steel before decarburization, from the carbon analysis results (percent by weight, expressed as a decimal fraction).

($C_{Steelout}$) = Carbon content of the molten steel after decarburization, from the carbon analysis results (percent by weight, expressed as a decimal fraction).

(R) = Annual mass of air pollution control residue collected (metric tons).

(C_R) = Carbon content of the air pollution control residue, from the carbon analysis results (percent by weight, expressed as a decimal fraction).

(vii) For direct reduction furnaces, estimate CO_2 emissions using Equation Q–7 of this section.

$$CO_2 = \frac{44}{12} * \left[(F_g) * (C_{gf}) * \frac{MW}{MVC} * 0.001 + (Ore) * (C_{Ore}) \right. \qquad \text{(Eq. Q-7)}$$

$$+ (Carbon) * (C_{Carbon}) + (Other) * (C_{Other})$$

$$\left. - (Iron)\ (C_{Iron}) - (NM) * (C_{NM}) - (R) * (C_R) \right]$$

Where:

CO_2 = Annual CO_2 mass emissions from the direct reduction furnace (metric tons).

44/12 = Ratio of molecular weights, CO_2 to carbon.

(F_g) = Annual volume of the gaseous fuel combusted (scf).

(C_{gf}) = Carbon content of the gaseous fuel, from the fuel analysis results (kg C per kg of fuel).

MW = Molecular weight of the gaseous fuel (kg/kg-mole).

MVC = Molar volume conversion factor (849.5 scf per kg-mole at standard conditions).

0.001 = Conversion factor from kg to metric tons.

(Ore) = Annual mass of iron ore or iron ore pellets fed to the furnace (metric tons).

(C_{Ore}) = Carbon content of the iron ore or iron ore pellets, from the carbon analysis results (percent by weight, expressed as a decimal fraction).

(Carbon) = Annual mass of carbonaceous materials (e.g., coal, coke) charged to the furnace (metric tons).

(C_{Carbon}) = Carbon content of the carbonaceous materials, from the carbon analysis results (percent by weight, expressed as a decimal fraction).

(Other) = Annual mass of other materials charged to the furnace (metric tons).

(C_{Other}) = Average carbon content of the other materials charged to the furnace, from the carbon analysis results (percent by weight, expressed as a decimal fraction).

(Iron) = Annual mass of iron produced (metric tons).

(C_{Iron}) = Carbon content of the iron, from the carbon analysis results (percent by weight, expressed as a decimal fraction).

(NM) = Annual mass of non-metallic materials produced by the furnace (metric tons).

(C_{NM}) = Carbon content of the non-metallic materials, from the carbon analysis results (percent by weight, expressed as a decimal fraction).

(R) = Annual mass of air pollution control residue collected (metric tons).

(C_R) = Carbon content of the air pollution control residue, from the carbon analysis results (percent by weight, expressed as a decimal fraction).

(2) *Site-specific emission factor method.* Conduct a performance test and measure CO_2 emissions from all exhaust stacks for the process and measure either the feed rate of materials into the process or the production rate during the test as described in paragraphs (b)(2)(i) through (b)(2)(iv) of this section.

(i) You must measure the process production rate or process feed rate, as applicable, during the performance test according to the procedures in §98.174(c)(5) and calculate the average rate for the test period in metric tons per hour.

(ii) You must calculate the hourly CO_2 emission rate using Equation Q–8 of this section and determine the average hourly CO_2 emission rate for the test.

$$CO_2 = 5.18 \text{ x } 10^{-7} \star C_{CO2} \star \text{Q} \star \left(\frac{100 - \%H_2O}{100} \right) \qquad \text{(Eq. Q-8)}$$

Where:

CO_2 = CO_2 mass emission rate, corrected for moisture (metric tons/hr).

5.18×10^{-7} = Conversion factor (metric tons/scf – % CO_2).

C_{CO2} = Hourly CO_2 concentration, dry basis (% CO_2).

Q = Hourly stack gas volumetric flow rate (scfh).

%H_2O = Hourly moisture percentage in the stack gas.

(iii) You must calculate a site-specific emission factor for the process in metric tons of CO_2 per metric ton of feed or production, as applicable, by dividing the average hourly CO_2 emission rate during the test by the average hourly feed or production rate during the test.

(iv) You must calculate CO_2 emissions for the process by multiplying the emission factor by the total amount of feed or production, as applicable, for the reporting period.

(c) You must determine emissions of CO_2 from the coke pushing process in mtCO_2e by multiplying the metric tons of coal charged to the coke ovens during the reporting period by 0.008.

(d) If GHG emissions from a taconite indurating furnace, basic oxygen furnace, non-recovery coke oven battery, sinter process, EAF, argon-oxygen decarburization vessel, or direct reduction furnace are vented through the same stack as any combustion unit or process equipment that reports CO_2 emissions using a CEMS that complies with the Tier 4 Calculation Methodology in subpart C of this part (General Stationary Fuel Combustion Sources), then the calculation methodology in paragraph (b) of this section shall not be used to calculate process emissions. The owner or operator shall report under this subpart the combined stack emissions according to the Tier 4 Calculation Methodology in §98.33(a)(4) and all associated requirements for Tier 4 in subpart C of this part (General Stationary Fuel Combustion Sources).

§98.174 Monitoring and QA/QC requirements.

(a) If you operate and maintain a CEMS that measures CO_2 emissions consistent with subpart C of this part, you must meet the monitoring and QA/QC requirements of §98.34(c).

(b) If you determine CO_2 emissions using the carbon mass balance procedure in §98.173(b)(1), you must:

(1) Except as provided in paragraph (b)(4) of this section, determine the

mass of each process input and output other than fuels using the same plant instruments or procedures that are used for accounting purposes (such as weigh hoppers, belt weigh feeders, weighed purchased quantities in shipments or containers, combination of bulk density and volume measurements, etc.), record the totals for each process input and output for each calendar month, and sum the monthly mass to determine the annual mass for each process input and output. Determine the mass rate of fuels using the procedures for combustion units in § 98.34.

(2) Except as provided in paragraph (b)(4) of this section, determine the carbon content of each process input and output annually for use in the applicable equations in § 98.173(b)(1) based on analyses provided by the supplier or by the average carbon content determined by collecting and analyzing at least three samples each year using the standard methods specified in paragraphs (b)(2)(i) through (b)(2)(vi) of this section as applicable.

(i) ASTM C25–06, Standard Test Methods for Chemical Analysis of Limestone, Quicklime, and Hydrated Lime (incorporated by reference, *see* § 98.7) for limestone, dolomite, and slag.

(ii) ASTM D5373–08 Standard Test Methods for Instrumental Determination of Carbon, Hydrogen, and Nitrogen in Laboratory Samples of Coal (incorporated by reference, *see* § 98.7) for coal, coke, and other carbonaceous materials.

(iii) ASTM E1915–07a, Standard Test Methods for Analysis of Metal Bearing Ores and Related Materials by Combustion Infrared-Absorption Spectrometry (incorporated by reference, *see* § 98.7) for iron ore, taconite pellets, and other iron-bearing materials.

(iv) ASTM E1019–08, Standard Test Methods for Determination of Carbon, Sulfur, Nitrogen, and Oxygen in Steel, Iron, Nickel, and Cobalt Alloys by Various Combustion and Fusion Techniques (incorporated by reference, *see* § 98.7) for iron and ferrous scrap.

(v) ASM CS–104 UNS No. G10460—Alloy Digest April 1985 (Carbon Steel of Medium Carbon Content) (incorporated by reference, *see* § 98.7); ISO/TR 15349–1:1998, Unalloyed steel—Determination of low carbon content, Part 1: Infrared absorption method after combustion in an electric resistance furnace (by peak separation) (1998–10–15) First Edition (incorporated by reference, *see* § 98.7); or ISO/TR 15349–3:1998, Unalloyed steel-Determination of low carbon content Part 3: Infrared absorption method after combustion in an electric resistance furnace (with preheating) (1998–10–15) First Edition (incorporated by reference, *see* § 98.7) as applicable for steel.

(vi) For each process input that is a fuel, determine the carbon content and molecular weight (if applicable) using the applicable methods listed in § 98.34.

(3) For solid ferrous materials charged to basic oxygen process furnaces or EAFs that differ in carbon content, you may determine a weighted average carbon content based on the carbon content of each type of ferrous material and the average weight percent of each type that is used. Examples of these different ferrous materials include carbon steel, low carbon steel, stainless steel, high alloy steel, pig iron, iron scrap, and direct reduced iron.

(4) If you document that a specific process input or output contributes less than one percent of the total mass of carbon into or out of the process, you do not have to determine the monthly mass or annual carbon content of that input or output.

(5) Except as provided in paragraph (b)(4) of this section, you must determine the annual carbon content and monthly mass rate of any input or output that contains carbon that is not listed in the equations in § 98.173(b)(1) using the procedures in paragraphs (b)(1) and (b)(2) of this section.

(c) If you determine CO_2 emissions using the site-specific emission factor procedure in § 98.173(b)(2), you must:

(1) Conduct an annual performance test that is based on representative performance (i.e., performance based on normal operating conditions) of the affected process.

(2) For the furnace exhaust from basic oxygen furnaces, EAFs, argon-oxygen decarburization vessels, and direct reduction furnaces, sample the furnace exhaust for at least three complete production cycles that start when the furnace is being charged and end

after steel or iron and slag have been tapped. For EAFs that produce both carbon steel and stainless or specialty (low carbon) steel, develop an emission factor for the production of both types of steel.

(3) For taconite indurating furnaces, non-recovery coke batteries, and sinter processes, sample for at least 3 hours.

(4) Conduct the stack test using EPA Method 3A at 40 CFR part 60, appendix A–2 to measure the CO_2 concentration, Method 2, 2A, 2C, 2D, or 2F at 40 CFR part 60, appendix A–1 or Method 26 at 40 CFR part 60, appendix A–2 to determine the stack gas volumetric flow rate, and Method 4 at 40 CFR part 60, at appendix A–3 to determine the moisture content of the stack gas.

(5) Determine the mass rate of process feed or process production (as applicable) during the test using the same plant instruments or procedures that are used for accounting purposes (such as weigh hoppers, belt weigh feeders, combination of bulk density and volume measurements, etc.)

(6) If your process operates under different conditions as part of normal operations in such a manner that CO_2 emissions change by more than 20 percent (e.g., routine changes in the carbon content of the sinter feed or change in grade of product), you must perform emission testing and develop separate emission factors for these different operating conditions and determine emissions based on the number of hours the process operates and the production or feed rate (as applicable) at each specific different condition.

(7) If your EAF and argon-oxygen decarburization vessel exhaust to a common emission control device and stack, you must sample each process in the ducts before the emissions are combined, sample each process when only one process is operating, or sample the combined emissions when both processes are operating and base the site-specific emission factor on the steel production rate of the EAF.

(8) The results of a performance test must include the analysis of samples, determination of emissions, and raw data. The performance test report must contain all information and data used to derive the emission factor.

(d) For a coke pushing process, determine the metric tons of coal charged to the coke ovens and record the totals for each pushing process for each calendar month. Coal charged to coke ovens can be measured using weigh belts or a combination of measuring volume and bulk density.

§ 98.175 Procedures for estimating missing data.

A complete record of all measured parameters used in the GHG emissions calculations in § 98.173 is required. Therefore, whenever a quality-assured value of a required parameter is unavailable, a substitute data value for the missing parameter shall be used in the calculations as specified in the paragraphs (a) and (b) of this section. You must document and keep records of the procedures used for all such estimates.

(a) For each missing data for the carbon content of inputs and outputs for facilities that estimate emissions using the carbon mass balance procedure in § 98.173(b)(1) or for facilities that estimate emissions using the site-specific emission factor procedure in § 98.173(b)(2); 100 percent data availability is required. You must repeat the test for average carbon contents of inputs and outputs according to the procedures in § 98.174(b)(2). Similarly, you must repeat the test to determine the site-specific emission factor if data on the CO_2 emission rate, process production rate or process feed rate are missing.

(b) For missing records of the monthly mass or volume of carbon-containing inputs and outputs using the carbon mass balance procedure in § 98.173(b)(1), the substitute data value must be based on the best available estimate of the mass of the input or output material from all available process data or data used for accounting purposes.

§ 98.176 Data reporting requirements.

In addition to the information required by § 98.3(c), each annual report must contain the information required in paragraphs (a) through (f) of this section for each coke pushing operation; taconite indurating furnace; basic oxygen furnace; non-recovery coke oven battery; sinter process; EAF;

argon-oxygen decarburization vessel; and direct reduction furnace:

(a) Unit identification number and annual CO_2 emissions (in metric tons).

(b) Annual production quantity (in metric tons) for taconite pellets, coke, sinter, iron, and raw steel.

(c) If a CEMS is used to measure CO_2 emissions, then you must report the relevant information required under § 98.37 for the Tier 4 Calculation Methodology.

(d) If a CEMS is not used to measure CO_2 emissions, then you must report for each process whether the emissions were determined using the carbon mass balance method in § 98.173(b)(1) or the site-specific emission factor method in § 98.173(b)(2).

(e) If you use the carbon mass balance method in § 98.173(b)(1) to determine CO_2 emissions, you must report the following information for each process:

(1) The carbon content of each process input and output used to determine CO_2 emissions.

(2) Whether the carbon content was determined from information from the supplier or by laboratory analysis, and if by laboratory analysis, the method used.

(3) The annual volume of gaseous fuel (in standard cubic feet), the annual volume of liquid fuel (in gallons), and the annual mass (in metric tons) of all other process inputs and outputs used to determine CO_2 emissions.

(4) The molecular weight of gaseous fuels.

(5) If you used the missing data procedures in § 98.175(b), you must report how the monthly mass for each process input or output with missing data was determined and the number of months the missing data procedures were used.

(f) If you used the site-specific emission factor method in § 98.173(b)(2) to determine CO_2 emissions, you must report the following information for each process:

(1) The measured average hourly CO_2 emission rate during the test (in metric tons per hour).

(2) The average hourly feed or production rate (as applicable) during the test (in metric tons per hour).

(3) The site-specific emission factor (in metric tons of CO_2 per metric ton of feed or production, as applicable).

(4) The annual feed or production rate (as applicable) used to estimate annual CO_2 emissions (in metric tons).

§ 98.177 Records that must be retained.

In addition to the records required by § 98.3(g), you must retain the records specified in paragraphs (a) through (e) of this section, as applicable. Facilities that use CEMS to measure emissions must also retain records of the verification data required for the Tier 4 Calculating Methodology in § 98.36(e).

(a) Records of all analyses and calculations conducted, including all information reported as required under § 98.176.

(b) When the carbon mass balance method is used to estimate emissions for a process, the monthly mass of each process input and output that are used to determine the annual mass.

(c) Production capacity (in metric tons per year) for the production of taconite pellets, coke, sinter, iron, and raw steel.

(d) Annual operating hours for taconite furnaces, coke oven batteries, sinter production, blast furnaces, direct reduced iron furnaces, and electric arc furnaces.

(e) Facilities must keep records that include a detailed explanation of how company records or measurements are used to determine all sources of carbon input and output and the metric tons of coal charged to the coke ovens (e.g., weigh belts, a combination of measuring volume and bulk density). You also must document the procedures used to ensure the accuracy of the measurements of fuel usage including, but not limited to, calibration of weighing equipment, fuel flow meters, coal usage including, but not limited to, calibration of weighing equipment and other measurement devices. The estimated accuracy of measurements made with these devices must also be recorded, and the technical basis for these estimates must be provided.

§ 98.178 Definitions.

All terms used in this subpart have the same meaning given in the Clean Air Act and subpart A of this part.

Subpart R—Lead Production

§ 98.180 Definition of the source category.

The lead production source category consists of primary lead smelters and secondary lead smelters. A primary lead smelter is a facility engaged in the production of lead metal from lead sulfide ore concentrates through the use of pyrometallurgical techniques. A secondary lead smelter is a facility at which lead-bearing scrap materials (including but not limited to, lead-acid batteries) are recycled by smelting into elemental lead or lead alloys.

§ 98.181 Reporting threshold.

You must report GHG emissions under this subpart if your facility contains a lead production process and the facility meets the requirements of either § 98.2(a)(1) or (a)(2).

§ 98.182 GHGs to report.

You must report:

(a) Process CO_2 emissions from each smelting furnace used for lead production.

(b) CO_2 combustion emissions from each smelting furnace used for lead production.

(c) CH_4 and N_2O combustion emissions from each smelting furnace used for lead production. You must calculate and report these emissions under subpart C of this part (General Stationary Fuel Combustion Sources) by following the requirements of subpart C.

(d) CO_2, CH_4, and N_2O emissions from each stationary combustion unit other than smelting furnaces used for lead production. You must report these emissions under subpart C of this part (General Stationary Fuel Combustion Sources) by following the requirements of subpart C.

§ 98.183 Calculating GHG emissions.

You must calculate and report the annual process CO_2 emissions from each smelting furnace using the procedure in paragraphs (a) and (b) of this section.

(a) For each smelting furnace that meets the conditions specified in § 98.33(b)(4)(ii) or (b)(4)(iii), you must calculate and report combined process and combustion CO_2 emissions by operating and maintaining a CEMS to measure CO_2 emissions according to the Tier 4 Calculation Methodology specified in § 98.33(a)(4) and all associated requirements for Tier 4 in subpart C of this part (General Stationary Fuel Combustion Sources).

(b) For each smelting furnace that is not subject to the requirements in paragraph (a) of this section, calculate and report the process and combustion CO_2 emissions from the smelting furnace by using the procedure in either paragraph (b)(1) or (b)(2) of this section.

(1) Calculate and report under this subpart the combined process and combustion CO_2 emissions by operating and maintaining a CEMS to measure CO_2 emissions according to the Tier 4 Calculation Methodology specified in § 98.33(a)(4) and all associated requirements for Tier 4 in subpart C of this part (General Stationary Fuel Combustion Sources).

(2) Calculate and report process and combustion CO_2 emissions separately using the procedures specified in paragraphs (b)(2)(i) through (b)(2)(iii) of this section.

(i) For each smelting furnace, determine the annual mass of carbon in each carbon-containing material, other than fuel, that is fed, charged, or otherwise introduced into the smelting furnace and estimate annual process CO_2 emissions using Equation R–1 of this section. Carbon-containing materials include carbonaceous reducing agents. If you document that a specific material contributes less than 1 percent of the total carbon into the process, you do not have to include the material in your calculation using Equation R–1 of this section.

$$E_{CO2} = \frac{44}{12} \times \frac{2000}{2205} \times \left[(Ore \times C_{Ore}) + (Scrap \times C_{Scrap}) + (Flux \times C_{Flux}) + (Carbon \times C_{Carbon}) + (Other \times C_{Other}) \right] \quad \text{(Eq. R-1)}$$

Where:

E_{CO2} = Annual process CO_2 emissions from an individual smelting furnace (metric tons).

44/12 = Ratio of molecular weights, CO_2 to carbon.

2000/2205 = Conversion factor to convert tons to metric tons.

Ore = Annual mass of lead ore charged to the smelting furnace (tons).

C_{Ore} = Carbon content of the lead ore, from the carbon analysis results (percent by weight, expressed as a decimal fraction).

Scrap = Annual mass of lead scrap charged to the smelting furnace (tons).

C_{Scrap} = Carbon content of the lead scrap, from the carbon analysis (percent by weight, expressed as a decimal fraction).

Flux = Annual mass of flux materials (e.g., limestone, dolomite) charged to the smelting furnace (tons).

C_{Flux} = Carbon content of the flux materials, from the carbon analysis (percent by weight, expressed as a decimal fraction).

Carbon = Annual mass of carbonaceous materials (e.g., coal, coke) charged to the smelting furnace (tons).

C_{Carbon} = Carbon content of the carbonaceous materials, from the carbon analysis (percent by weight, expressed as a decimal fraction).

Other = Annual mass of any other material containing carbon, other than fuel, fed, charged, or otherwise introduced into the smelting furnace (tons).

C_{Other} = Carbon content of the other material from the carbon analysis results (percent by weight, expressed as a decimal fraction).

(ii) Determine the combined annual process CO_2 emissions from the smelting furnaces at your facility using Equation R–2 of this section.

$$CO_2 = \sum_{1}^{k} E_{CO2_k} \quad \text{(Eq. R-2)}$$

Where:

CO_2 = Annual process CO_2 emissions from smelting furnaces at facility used for lead production (metric tons).

E_{CO2_k} = Annual process CO_2 emissions from smelting furnace k calculated using Equation R–1 of this section (metric tons/year).

k = Total number of smelting furnaces at facility used for lead production.

(iii) Calculate and report under subpart C of this part (General Stationary Fuel Combustion Sources) the combustion CO_2 emissions from the smelting furnaces according to the applicable requirements in subpart C.

§ 98.184 Monitoring and QA/QC requirements.

If you determine process CO_2 emissions using the carbon mass balance procedure in § 98.183(b)(2)(i) and (b)(2)(ii), you must meet the requirements specified in paragraphs (a) and (b) of this section.

(a) Determine the annual mass for each material used for the calculations of annual process CO_2 emissions using Equation R–1 of this subpart by summing the monthly mass for the material determined for each month of the calendar year. The monthly mass may be determined using plant instruments used for accounting purposes, including either direct measurement of the quantity of the material placed in the unit or by calculations using process operating information.

(b) For each material identified in paragraph (a) of this section, you must determine the average carbon content of the material consumed or used in the calendar year using the methods specified in either paragraph (b)(1) or (b)(2) of this section. If you document that a specific process input or output contributes less than one percent of the total mass of carbon into or out of the process, you do not have to determine the monthly mass or annual carbon content of that input or output.

(1) Information provided by your material supplier.

(2) Collecting and analyzing at least three representative samples of the material each year. The carbon content of the material must be analyzed at least annually using the methods (and their QA/QC procedures) specified in paragraphs (b)(2)(i) through (b)(2)(iii) of this section, as applicable.

(i) ASTM E1941–04, Standard Test Method for Determination of Carbon in Refractory and Reactive Metals and Their Alloys (incorporated by reference, see § 98.7) for analysis of metal ore and alloy product.

(ii) ASTM D5373–08 Standard Test Methods for Instrumental Determination of Carbon, Hydrogen, and Nitrogen in Laboratory Samples of Coal (incorporated by reference, see § 98.7), for analysis of carbonaceous reducing agents and carbon electrodes.

(iii) ASTM C25–06, Standard Test Methods for Chemical Analysis of Limestone, Quicklime, and Hydrated Lime (incorporated by reference, see § 98.7) for analysis of flux materials such as limestone or dolomite.

§ 98.185 Procedures for estimating missing data.

A complete record of all measured parameters used in the GHG emissions calculations in § 98.183 is required. Therefore, whenever a quality-assured value of a required parameter is unavailable, a substitute data value for the missing parameter shall be used in the calculations as specified in the paragraphs (a) and (b) of this section. You must document and keep records of the procedures used for all such estimates.

(a) For each missing data for the carbon content for the smelting furnaces at your facility that estimate annual process CO_2 emissions using the carbon mass balance procedure in § 98.183(b)(2)(i) and (ii), 100 percent data availability is required. You must repeat the test for average carbon contents of inputs according to the procedures in § 98.184(b) if data are missing.

(b) For missing records of the monthly mass of carbon-containing materials, the substitute data value must be based the best available estimate of the mass of the material from all available process data or data used for accounting purposes (such as purchase records).

§ 98.186 Data reporting procedures.

In addition to the information required by § 98.3(c), each annual report must contain the information specified in paragraphs (a) or (b) of this section, as applicable.

(a) If a CEMS is used to measure CO_2 emissions according to the requirements in § 98.183(a) or (b)(1), then you must report under this subpart the relevant information required by § 98.36 and the information specified in paragraphs (a)(1) through (a)(4) of this section.

(1) Identification number of each smelting furnace.

(2) Annual lead product production capacity (tons).

(3) Annual production for each lead product (tons).

(4) Total number of smelting furnaces at facility used for lead production.

(b) If a CEMS is not used to measure CO_2 emissions, and you measure CO_2 emissions according to the requirements in § 98.183(b)(2)(i) and (b)(2)(ii), then you must report the information specified in paragraphs (b)(1) through (b)(9) of this section.

(1) Identification number of each smelting furnace. (2) Annual process CO_2 emissions (in metric tons) from each smelting furnace as determined by Equation R–1 of this subpart.

(3) Annual lead product production capacity for the facility and each smelting furnace(tons).

(4) Annual production for each lead product (tons).

(5) Total number of smelting furnaces at facility used for production of lead products reported in paragraph (b)(4) of this section.

(6) Annual material quantity for each material used for the calculation of annual process CO_2 emissions using Equation R–1 of this subpart for each smelting furnace (tons).

(7) Annual average of the carbon content determinations for each material used for the calculation of annual process CO_2 emissions using Equation R–1 of this subpart for each smelting furnace.

(8) List the method used for the determination of carbon content for each material reported in paragraph (b)(7) of this section (e.g., supplier provided information, analyses of representative samples you collected).

(9) If you use the missing data procedures in § 98.185(b), you must report how the monthly mass of carbon-containing materials with missing data was determined and the number of months the missing data procedures were used.

§ 98.187 Records that must be retained.

In addition to the records required by § 98.3(g), each annual report must contain the information specified in paragraphs (a) through (c) of this section, as applicable to the smelting furnaces at your facility.

(a) If a CEMS is used to measure combined process and combustion CO_2 emissions according to the requirements in § 98.183(a) or (b)(1), then you must retain the records required for the Tier 4 Calculation Methodology in § 98.37 and the information specified in paragraphs (a)(1) through (a)(3) of this section.

(1) Monthly smelting furnace production quantity for each lead product (tons).

(2) Number of smelting furnace operating hours each month.

(3) Number of smelting furnace operating hours in calendar year.

(b) If the carbon mass balance procedure is used to determine process CO_2 emissions according to the requirements in § 98.183(b)(2)(i) and (b)(2)(ii), then you must retain under this subpart the records specified in paragraphs (b)(1) through (b)(5) of this section.

(1) Monthly smelting furnace production quantity for each lead product (tons).

(2) Number of smelting furnace operating hours each month.

(3) Number of smelting furnace operating hours in calendar year.

(4) Monthly material quantity consumed, used, or produced for each material included for the calculations of annual process CO_2 emissions using Equation R–1 of this subpart (tons).

(5) Average carbon content determined and records of the supplier provided information or analyses used for the determination for each material included for the calculations of annual process CO_2 emissions using Equation R–1 of this subpart.

(c) You must keep records that include a detailed explanation of how company records of measurements are used to estimate the carbon input to each smelting furnace, including documentation of any materials excluded from Equation R–1 of this subpart that contribute less than 1 percent of the total carbon into or out of the process. You also must document the procedures used to ensure the accuracy of the measurements of materials fed, charged, or placed in an smelting furnace including, but not limited to, calibration of weighing equipment and other measurement devices. The estimated accuracy of measurements made with these devices must also be recorded, and the technical basis for these estimates must be provided.

§ 98.188 Definitions.

All terms used in this subpart have the same meaning given in the Clean Air Act and subpart A of this part.

Subpart S—Lime Manufacturing

§ 98.190 Definition of the source category.

(a) Lime manufacturing plants (LMPs) engage in the manufacture of a lime product (e.g., calcium oxide, high-calcium quicklime, calcium hydroxide, hydrated lime, dolomitic quicklime, dolomitic hydrate, or other products) by calcination of limestone, dolomite, shells or other cacareous substances as defined in 40 CFR 63.7081(a)(1).

(b) This source category includes all LMPs unless the LMP is located at a kraft pulp mill, soda pulp mill, sulfite pulp mill, or only processes sludge containing calcium carbonate from water softening processes. The lime manufacturing source category consists of marketed and non-marketed lime manufacturing facilities.

(c) Lime kilns at pulp and paper manufacturing facilities must report emissions under subpart AA of this part (Pulp and Paper Manufacturing).

§ 98.191 Reporting threshold.

You must report GHG emissions under this subpart if your facility is a lime manufacturing plant as defined in § 98.190 and the facility meets the requirements of either § 98.2(a)(1) or (a)(2).

§ 98.192 GHGs to report.

You must report:

(a) CO_2 process emissions from lime kilns.

(b) CO_2 emissions from fuel combustion at lime kilns.

(c) N_2O and CH_4 emissions from fuel combustion at each lime kiln. You must report these emissions under 40 CFR part 98, subpart C (General Stationary Fuel Combustion Sources).

(d) CO_2, N_2O, and CH_4 emissions from each stationary fuel combustion unit other than lime kilns. You must report these emissions under 40 CFR part 98, subpart C (General Stationary Fuel Combustion Sources).

(e) CO_2 collected and transferred off site under 40 CFR part 98, following the requirements of subpart PP of this part (Suppliers of Carbon Dioxide (CO_2)).

§98.193 Calculating GHG emissions.

You must calculate and report the annual process CO_2 emissions from all lime kilns combined using the procedure in paragraphs (a) and (b) of this section.

(a) If all lime kilns meet the conditions specified in §98.33(b)(4)(ii) or (b)(4)(iii), you must calculate and report under this subpart the combined process and combustion CO_2 emissions by operating and maintaining a CEMS to measure CO_2 emissions according to the Tier 4 Calculation Methodology specified in §98.33(a)(4) and all associated requirements for Tier 4 in subpart C of this part (General Stationary Fuel Combustion Sources).

(b) If CEMS are not required to be used to determine CO_2 emissions from all lime kilns under paragraph (a) of this section, then you must calculate and report the process and combustion CO_2 emissions from the lime kilns by using the procedures in either paragraph (b)(1) or (b)(2) of this section.

(1) Calculate and report under this subpart the combined process and combustion CO_2 emissions by operating and maintaining a CEMS to measure CO_2 emissions from all lime kilns according to the Tier 4 Calculation Methodology specified in §98.33(a)(4) and all associated requirements for Tier 4 in subpart C of this part (General Stationary Fuel Combustion Sources).

(2) Calculate and report process and combustion CO_2 emissions separately using the procedures specified in paragraphs (b)(2)(i) through (b)(2)(v) of this section.

(i) You must calculate a monthly emission factor for each type of lime produced using Equation S–1 of this section. Calcium oxide and magnesium oxide content must be analyzed monthly for each lime type:

$$EF_{LIME,i,n} = \left[\left(SR_{CaO} * CaO_{i,n}\right) + \left(SR_{MgO} * MgO_{i,n}\right)\right] * \frac{2000}{2205} \qquad \text{(Eq. S-1)}$$

Where:

$EF_{LIME,i,n}$ = Emission factor for lime type i, for month n (metric tons CO_2/ton lime).

SR_{CaO} = Stoichiometric ratio of CO_2 and CaO for calcium carbonate [see Table S–1 of this subpart] (metric tons CO_2/metric tons CaO).

SR_{MgO} = Stoichiometric ratio of CO_2 and MgO for magnesium carbonate (See Table S–1 of this subpart) (metric tons CO_2/metric tons MgO).

$CaO_{i,n}$ = Calcium oxide content for lime type i, for month n, determined according to §98.194(c) (metric tons CaO/metric ton lime).

$MgO_{i,n}$ = Magnesium oxide content for lime type i, for month n, determined according to §98.194(c) (metric tons MgO/metric ton lime).

2000/2205 = Conversion factor for metric tons to tons.

(ii) You must calculate a monthly emission factor for each type of by-product/waste sold (including lime kiln dust) using Equation S–2 of this section:

$$EF_{LKD,i,n} = \left[\left(SR_{CaO} * CaO_{LKD,i,n}\right) + \left(SR_{MgO} * MgO_{LKD,i,n}\right)\right] * \frac{2000}{2205} \qquad \text{(Eq. S-2)}$$

Where:

$EF_{LKD,i,n}$ = Emission factor for sold lime byproduct/waste type i, for month n (metric tons CO_2/ton lime byproduct).

SR_{CaO} = Stoichiometric ratio of CO_2 and CaO for calcium carbonate (see Table S–1 of this subpart((metric tons CO_2/metric tons CaO).

SR_{MgO} = Stoichiometric ratio of CO_2 and MgO for magnesium carbonate (See Table S–1 of this subpart) (metric tons CO_2/metric tons MgO).

$CaO_{LKD,i,n}$ = Calcium oxide content for sold lime byproduct/waste type i, for month n (metric tons CaO/metric ton lime).

$MgO_{LKD,i,n}$ = Magnesium oxide content for sold lime byproduct/waste type i, for month n (metric tons MgO/metric ton lime).

2000/2205 = Conversion factor for metric tons to tons.

(iii) You must calculate the annual CO_2 emissions from each type of byproduct/waste that is not sold (including lime kiln dust and scrubber sludge) using Equation S–3 of this section:

$$E_{waste,i} = \left[\left(SR_{CaO} * CaO_{waste,i}\right) + \left(SR_{MgO} * MgO_{waste,i}\right)\right] * M_{waste,i} * \frac{2000}{2205} \qquad \text{(Eq. S-3)}$$

Where:

$E_{waste,i}$ = Annual CO_2 emissions for unsold lime byproduct/waste type i (metric tons CO_2).

SR_{CaO} = Stoichiometric ratio of CO_2 and CaO for calcium carbonate (see Table S–1 of this subpart) (metric tons CO_2/metric tons CaO).

SR_{MgO} = Stoichiometric ratio of CO_2 and MgO for magnesium carbonate (See Table S–1 of this subpart) (metric tons CO_2/metric tons MgO).

$CaO_{waste,i}$ = Calcium oxide content for unsold lime byproduct/waste type i (metric tons CaO/metric ton lime).

$MgO_{waste,i}$ = Magnesium oxide content for unsold lime byproduct/waste type i (metric tons MgO/metric ton lime).

$M_{waste,i}$ = Annual weight or mass of unsold byproducts/wastes for lime type i (tons).

2000/2205 = Conversion factor for metric tons to tons.

(iv) You must calculate annual CO_2 process emissions for all kilns using Equation S–4 of this section:

$$E_{CO_2} \sum_{i=1}^{t} \sum_{n=1}^{12} \left(EF_{LIME,i,n} * M_{LIME,i,n}\right) + \sum_{i=1}^{b} \sum_{n=1}^{12} EF_{LKD,i,n} * M_{LKD,i,n}\right) + \sum_{i=1}^{z} E_{waste,i} \qquad \text{(Eq. S-4)}$$

Where:

E_{CO2} = Annual CO_2 process emissions from lime production from all kilns (metric tons/year).

$EF_{LIME,i,n}$ = Emission factor for lime type i, in calendar month n (metric tons CO_2/ton lime) from Equation S–1 of this section.

$M_{LIME,i,n}$ = Weight or mass of lime type i in calendar month n (tons).

$EF_{LKD,i,n}$ = Emission factor of byproducts/wastes sold for lime type i in calendar month n, (metric tons CO_2/ton byproduct/waste) from Equation S–2 of this section.

$M_{LKD,i,n}$ = Monthly weight or mass of byproducts/waste sold (such as lime kiln dust, LKD) for lime type i in calendar month n (tons).

$E_{waste,i}$ = Annual CO_2 emissions for unsold lime byproduct/waste type i (metric tons CO_2) from Equation S–3 of this section.

t = Number of lime types

b = Number of byproducts/wastes sold

z = Number of byproducts/wastes not sold

(v) Calculate and report under subpart C of this part (General Stationary Fuel Combustion Sources) the combustion CO_2 emissions from each lime kiln according to the applicable requirements in subpart C.

§ 98.194 Monitoring and QA/QC requirements.

(a) You must determine the total quantity of each product type of lime and each calcined byproduct/waste (such as lime kiln dust) that is sold. The quantities of each should be directly measured monthly with the

same plant instruments used for accounting purposes, including but not limited to, calibrated weigh feeders, rail or truck scales, and barge measurements. The direct measurements of each lime product shall be reconciled annually with the difference in the beginning of and end of year inventories for these products, when measurements represent lime sold.

(b) You must determine the annual quantity of each calcined byproduct/waste generated that is not sold by either direct measurement using the same instruments identified in paragraph (a) of this section or by using a calcined byproduct/waste generation rate.

(c) You must determine the chemical composition (percent total CaO and percent total MgO) of each type of lime and each type of calcined byproduct/waste sold according to paragraph (c)(1) or (c)(2) of this section. You must determine the chemical composition of each type of lime on a monthly basis. You must determine the chemical composition for each type of calcined byproduct/waste that is not sold on an annual basis.

(1) ASTM C25–06 Standard Test Methods for Chemical Analysis of Limestone, Quicklime, and Hydrated Lime (incorporated by reference—*see* § 98.7).

(2) The National Lime Association's CO_2 Emissions Calculation Protocol for the Lime Industry English Units Version, February 5, 2008 Revision-National Lime Association (incorporated by reference—see § 98.7).

(d) You must use the analysis of calcium oxide and magnesium oxide content of each lime product collected during the same month as the production data in monthly calculations.

(e) You must follow the quality assurance/quality control procedures (including documentation) in National Lime Association's CO_2 Emissions Calculation Protocol for the Lime Industry English Units Version, February 5, 2008 Revision—National Lime Association (incorporated by reference—*see* § 98.7).

§ 98.195 Procedures for estimating missing data.

For the procedure in § 98.193(b)(2), a complete record of all measured parameters used in the GHG emissions calculations is required (e.g., oxide content, quantity of lime products, etc.). Therefore, whenever a quality-assured value of a required parameter is unavailable, a substitute data value for the missing parameter shall be used in the calculations as specified in paragraphs (a) or (b) of this section. You must document and keep records of the procedures used for all such estimates.

(a) For each missing value of the quantity of lime produced (by lime type), and quantity of byproduct/waste produced and sold, the substitute data value shall be the best available estimate based on all available process data or data used for accounting purposes.

(b) For missing values related to the CaO and MgO content, you must conduct a new composition test according to the standard methods in § 98.194 (c)(1) or (c)(2).

§ 98.196 Data reporting requirements.

In addition to the information required by § 98.3(c), each annual report must contain the information specified in paragraphs (a) or (b) of this section, as applicable.

(a) If a CEMS is used to measure CO_2 emissions, then you must report under this subpart the relevant information required by § 98.36 and the information listed in paragraphs (a)(1) through (a)(8) of this section.

(1) Method used to determine the quantity of lime sold.

(2) Method used to determine the quantity of lime byproduct/waste sold.

(3) Beginning and end of year inventories for each lime product.

(4) Beginning and end of year inventories for lime byproducts/wastes.

(5) Annual amount of lime byproduct/waste sold, by type (tons).

(6) Annual amount of lime product sold, by type (tons).

(7) Annual amount of lime byproduct/waste not sold, by type (tons).

(8) Annual amount of lime product not sold, by type (tons).

(b) If a CEMS is not used to measure CO_2 emissions, then you must report the information listed in paragraphs (b)(1) through (b)(17) of this section.

(1) Annual CO_2 process emissions from all kilns combined (metric tons).

(2) Monthly emission factors for each lime type.

(3) Monthly emission factors for each sold byproduct/waste by lime type.

(4) Standard method used (ASTM or NLA testing method) to determine chemical compositions of each lime type and lime byproduct/waste type.

(5) Monthly results of chemical composition analysis of each lime product and byproduct/waste sold.

(6) Annual results of chemical composition analysis of each type of lime byproduct/waste not sold.

(7) Method used to determine the quantity of lime sold.

(8) Monthly amount of lime product sold, by type (tons).

(9) Method used to determine the quantity of lime byproduct/waste sold.

(10) Monthly amount of lime byproduct/waste sold, by type (tons).

(11) Annual amount of lime byproduct/waste not sold (tons).

(12) Monthly mass of each lime type produced (tons).

(13) Beginning and end of year inventories for each lime product.

(14) Beginning and end of year inventories for lime byproducts/wastes.

(15) Annual lime production capacity (tons) per facility.

(16) Number of times in the reporting year that missing data procedures were followed to measure lime production (months) or the chemical composition of lime products sold (months).

(17) Indicate whether CO_2 was used on-site (i.e. for use in a purification process). If CO_2 was used on-site, provide the information in paragraphs (b)(17)(i) and (b)(17)(ii) of this section.

(i) The annual amount of CO_2 captured for use in the on-site process.

(ii) The method used to determine the amount of CO_2 captured.

§ 98.197 Records that must be retained.

In addition to the records required by § 98.3(g), you must retain the records specified in paragraphs (a) and (b) of this section.

(a) Annual operating hours in calendar year.

(b) Records of all analyses (e.g. chemical composition of lime products, by type) and calculations conducted.

§ 98.198 Definitions.

All terms used in this subpart have the same meaning given in the Clean Air Act and subpart A of this part.

TABLE S–1 TO SUBPART S OF PART 98—BASIC PARAMETERS FOR THE CALCULATION OF EMISSION FACTORS FOR LIME PRODUCTION

Variable	Stoichiometric ratio
SR_{CaO}	0.7848
SR_{MgO}	1.0918

Subpart T [Reserved]

Subpart U—Miscellaneous Uses of Carbonate

§ 98.210 Definition of the source category.

(a) This source category includes any equipment that uses carbonates listed in Table U–1 in manufacturing processes that emit carbon dioxide. Table U–1 includes the following carbonates: limestone, dolomite, ankerite, magnesite, siderite, rhodochrosite, or sodium carbonate. Facilities are considered to emit CO_2 if they consume at least 2,000 tons per year of carbonates heated to a temperature sufficient to allow the calcination reaction to occur.

(b) This source category does not include equipment that uses carbonates or carbonate containing minerals that are consumed in the production of cement, glass, ferroalloys, iron and steel, lead, lime, phosphoric acid, pulp and paper, soda ash, sodium bicarbonate, sodium hydroxide, or zinc.

(c) This source category does not include carbonates used in sorbent technology used to control emissions from stationary fuel combustion equipment. Emissions from carbonates used in sorbent technology are reported under 40 CFR 98, subpart C (Stationary Fuel Combustion Sources).

§ 98.211 Reporting threshold.

You must report GHG emissions from miscellaneous uses of carbonate if your facility uses carbonates as defined in § 98.210 of this subpart and the facility

meets the requirements of either §98.2(a)(1) or (a)(2).

§98.212 GHGs to report.

You must report CO_2 process emissions from all miscellaneous carbonate use at your facility as specified in this subpart.

§98.213 Calculating GHG emissions.

You must determine CO_2 process emissions from carbonate use in accordance with the procedures specified in either paragraphs (a) or (b) of this section.

(a) Calculate the process emissions of CO_2 using calcination fractions with Equation U–1 of this section.

$$E_{CO_2} = \sum_{i=1}^{n} M_i * EF_i * F_i * \frac{2000}{2205} \qquad \text{(Eq. U-1)}$$

Where:

E_{CO2} = Annual CO_2 mass emissions from consumption of carbonates (metric tons).

M_i = Annual mass of carbonate type i consumed (tons).

EF_i = Emission factor for the carbonate type i, as specified in Table U–1 to this subpart, metric tons CO_2/metric ton carbonate consumed.

F_i = Fraction calcination achieved for each particular carbonate type i (decimal fraction). As an alternative to measuring the calcination fraction, a value of 1.0 can be used.

n = Number of carbonate types.

2000/2205 = Conversion factor to convert tons to metric tons.

(b) Calculate the process emissions of CO_2 using actual mass of output carbonates with Equation U–2 of this section.

$$E_{CO_2} = \left[\sum_{k=1}^{m} \left(M_k * EF_k \right) - \sum_{j=1}^{n} \left(M_j * EF_j \right) \right] * \frac{2000}{2205} \qquad \text{(Eq. U-2)}$$

Where:

E_{CO2} = Annual CO_2 mass emissions from consumption of carbonates (metric tons).

M_k = Annual mass of input carbonate type k (tons).

EF_k = Emission factor for the carbonate type k, as specified in Table U–1 of this subpart (metric tons CO_2/metric ton carbonate input).

M_j = Annual mass of output carbonate type j (tons).

EF_j = Emission factor for the output carbonate type j, as specified in Table U–1 of this subpart (metric tons CO_2/metric ton carbonate input).

m = Number of input carbonate types.

n = Number of output carbonate types.

§98.214 Monitoring and QA/QC requirements.

(a) The annual mass of carbonate consumed (for Equation U–1 of this subpart) or carbonate inputs (for Equation U–2 of this subpart) must be determined annually from monthly measurements using the same plant instruments used for accounting purposes including purchase records or direct measurement, such as weigh hoppers or weigh belt feeders.

(b) The annual mass of carbonate outputs (for Equation U–2 of this subpart) must be determined annually from monthly measurements using the same plant instruments used for accounting purposes including purchase records or direct measurement, such as weigh hoppers or belt weigh feeders.

(c) If you follow the procedures of §98.213(a), as an alternative to assuming a calcination fraction of 1.0, you can determine on an annual basis the calcination fraction for each carbonate consumed based on sampling and chemical analysis using a suitable method such as using an x-ray fluorescence

standard method or other enhanced industry consensus standard method published by an industry consensus standard organization (e.g., ASTM, ASME, etc.).

§ 98.215 Procedures for estimating missing data.

(a) A complete record of all measured parameters used in the GHG emissions calculations is required. Therefore, whenever a quality-assured value of a required parameter is unavailable, a substitute data value for the missing parameter shall be used in the calculations as specified in paragraph (b) of this section. You must document and keep records of the procedures used for all such estimates.

(b) For each missing value of monthly carbonate consumed, monthly carbonate output, or monthly carbonate input, the substitute data value must be the best available estimate based on the all available process data or data used for accounting purposes.

§ 98.216 Data reporting requirements.

In addition to the information required by § 98.3(c), each annual report must contain the information specified in paragraphs (a) through (g) of this section at the facility level, as applicable.

(a) Annual CO_2 emissions from miscellaneous carbonate use (metric tons).

(b) Annual mass of each carbonate type consumed (tons).

(c) Measurement method used to determine the mass of carbonate.

(d) Method used to calculate emissions.

(e) If you followed the calculation method of § 98.213(b)(1)(i), you must report the information in paragraphs (e)(1) through (e)(3) of this section.

(1) Annual carbonate consumption by carbonate type (tons).

(2) Annual calcination fractions used in calculations.

(3) If you determined the calcination fraction, indicate which standard method was used.

(f) If you followed the calculation method of § 98.213(b)(1)(ii), you must report the information in paragraphs (f)(1) and (f)(2) of this section.

(1) Annual carbonate input by carbonate type (tons).

(2) Annual carbonate output by carbonate type (tons).

(g) Number of times in the reporting year that missing data procedures were followed to measure carbonate consumption, carbonate input or carbonate output (months).

§ 98.217 Records that must be retained.

In addition to the records required by § 98.3(g), you must retain the records specified in paragraphs (a) through (d) of this section:

(a) Monthly carbonate consumption (by carbonate type in tons).

(b) You must document the procedures used to ensure the accuracy of the monthly measurements of carbonate consumption, carbonate input or carbonate output including, but not limited to, calibration of weighing equipment and other measurement devices.

(c) Records of all analyses conducted to meet the requirements of this rule.

(d) Records of all calculations conducted.

§ 98.218 Definitions.

All terms used in this subpart have the same meaning given in the Clean Air Act and subpart A of this part.

TABLE U–1 TO SUBPART U OF PART 98—CO_2 EMISSION FACTORS FOR COMMON CARBONATES

Mineral name—carbonate	CO_2 emission factor (tons CO_2/ton carbonate)
Limestone—$CaCO_3$	0.43971
Magnesite—$MgCO_3$	0.52197
Dolomite—$CaMg(CO_3)_2$	0.47732
Siderite—$FeCO_3$	0.37987
Ankerite—$Ca(Fe, Mg, Mn)(CO_3)_2$	0.47572

TABLE U–1 TO SUBPART U OF PART 98—CO_2 EMISSION FACTORS FOR COMMON CARBONATES—Continued

Mineral name—carbonate	CO_2 emission factor (tons CO_2/ton carbonate)
Rhodochrosite—$MnCO_3$	0.38286
Sodium Carbonate/Soda Ash—Na_2CO_3	0.41492

Subpart V—Nitric Acid Production

§ 98.220 Definition of source category.

A nitric acid production facility uses one or more trains to produce weak nitric acid (30 to 70 percent in strength). A nitric acid train produces weak nitric acid through the catalytic oxidation of ammonia.

§ 98.221 Reporting threshold.

You must report GHG emissions under this subpart if your facility contains a nitric acid train and the facility meets the requirements of either § 98.2(a)(1) or (a)(2).

§ 98.222 GHGs to report.

(a) You must report N_2O process emissions from each nitric acid production train as required by this subpart.

(b) You must report under subpart C of this part (General Stationary Fuel Combustion Sources) the emissions of CO_2, CH_4, and N_2O from each stationary combustion unit by following the requirements of subpart C.

§ 98.223 Calculating GHG emissions.

(a) You must determine annual N_2O process emissions from each nitric acid train according to paragraphs (a)(1) or (a)(2) of this section.

(1) Use a site-specific emission factor and production data according to paragraphs (b) through (h) of this section.

(2) Request Administrator approval for an alternative method of determining N_2O emissions according to paragraphs (a)(2)(i) and (a)(2)(ii) of this section.

(i) You must submit the request within 45 days following promulgation of this subpart or within the first 30 days of each subsequent reporting year.

(ii) If the Administrator does not approve your requested alternative method within 150 days of the end of the reporting year, you must determine the N_2O emissions factor for the current reporting period using the procedures specified in paragraph (a)(1) of this section.

(b) You must conduct an annual performance test according to paragraphs (b)(1) through (b)(3) of this section.

(1) You must measure N_2O emissions from the absorber tail gas vent for each nitric acid train using the methods specified in § 98.224(b) through (d).

(2) You must conduct the performance test under normal process operating conditions and without using N_2O abatement technology (if applicable).

(3) You must measure the production rate during the performance test and calculate the production rate for the test period in metric tons (100 percent acid basis) per hour.

(c) You must determine an N_2O emissions factor to use in Equation V–3 of this section according to paragraphs (c)(1) or (c)(2) of this section.

(1) You may request Administrator approval for an alternative method of determining N_2O concentration according to the procedures in paragraphs (a)(2)(i) and (a)(2)(ii) of this section. Alternative methods include the use of N_2O CEMs.

(2) Using the results of the performance test in paragraph (b) of this section, you must calculate an average site-specific emission factor for each nitric acid train ''t'' according to Equation V–1 of this section:

$$EF_{N2Ot} = \frac{\sum_{1}^{n} \frac{C_{N2O} * 1.14 \times 10^{-7} * Q}{P}}{n} \qquad \text{(Eq. V-1)}$$

Where:

EF_{N2Ot} = Average site-specific N_2O emissions factor for nitric acid train ''t'' (lb N_2O generated/ton nitric acid produced, 100 percent acid basis).

C_{N2O} = N_2O concentration for each test run during the performance test (ppm N_2O).

1.14×10^{-7} = Conversion factor (lb/dscf-ppm N_2O).

Q = Volumetric flow rate of effluent gas for each test run during the performance test (dscf/hr).

P = Production rate for each test run during the performance test (tons nitric acid produced per hour, 100 percent acid basis).
n = Number of test runs.

(d) If applicable, you must determine the destruction efficiency for each N_2O abatement technology according to paragraphs (d)(1), (d)(2), or (d)(3) of this section.

(1) Use the manufacturer's specified destruction efficiency.

(2) Estimate the destruction efficiency through process knowledge. Examples of information that could constitute process knowledge include calculations based on material balances, process stoichiometry, or previous test results provided the results are still relevant to the current vent stream conditions. You must document how process knowledge (if applicable) was used to determine the destruction efficiency.

(3) Calculate the destruction efficiency by conducting an additional performance test on the emissions stream following the N_2O abatement technology.

(e) If applicable, you must determine the abatement factor for each N_2O abatement technology. The abatement factor is calculated for each nitric acid train according to Equation V–2 of this section.

$$AF_{Nt} = \frac{P_{at\ Abate}}{P_{at}} \qquad \text{(Eq. V-2)}$$

Where:

$AF_{N\ t}$ = Abatement factor of N_2O abatement technology at nitric acid train ''t'' (fraction of annual production that abatement technology is operating).

$P_{a\ t}$ = Total annual nitric acid production from nitric acid train ''t'' (ton acid produced, 100 percent acid basis).

$P_{a\ t\ Abate}$ = Annual nitric acid production from nitric acid train ''t'' during which N_2O abatement was used (ton acid produced, 100 percent acid basis).

(f) You must determine the annual amount of nitric acid produced and the annual amount of nitric acid produced while each N_2O abatement technology is operating from each nitric acid train (100 percent basis).

(g) You must calculate N_2O emissions for each nitric acid train by multiplying the emissions factor (determined in Equation V–1 of this section) by the annual nitric acid production and accounting for N_2O abatement, according to Equation V–3 of this section:

$$EF_{N_2Ot} = \sum_{N=1}^{z} \frac{EF_{N2Ot} * P_{at} * \left(1 - \left(DF_{Nt} * AF_{Nt}\right)\right)}{2204.63} \qquad \text{(Eq. V-3)}$$

Where:

E_{N2Ot} = N_2O mass emissions per year for nitric acid train ''t'' (metric tons).

EF_{N2Ot} = Average site-specific N_2O emissions factor for nitric acid train ''t'' (lb N_2O generated/ton acid produced, 100 percent acid basis).

$P_{a\ t}$ = Annual nitric acid production from the train ''t'' (ton acid produced, 100 percent acid basis).

$DF_{N\ t}$ = Destruction efficiency of N_2O abatement technology N that is used on nitric acid train ''t'' (percent of N_2O removed from air stream).

$AF_{N\ t}$ = Abatement factor of N_2O abatement technology for nitric acid train ''t'' (fraction of annual production that abatement technology is operating).

2204.63 = Conversion factor (lb/metric ton).

z = Number of different N_2O abatement technologies.

(h) You must determine the annual nitric acid production emissions combined from all nitric acid trains at your facility using Equation V–4 of this section:

$$N_2O = \sum_{t=1}^{m} E_{N2Ot} \qquad \text{(Eq. V-4)}$$

Where:

N_2O = Annual process N_2O emissions from nitric acid production facility (metric tons).

E_{N2Ot} = N_2O mass emissions per year for nitric acid train ''t'' (metric tons).

m = Number of nitric acid trains.

§ 98.224 Monitoring and QA/QC requirements.

(a) You must conduct a new performance test and calculate a new site-specific emissions factor according to a test plan as specified in paragraphs (a)(1) through (a)(3) of this section.

(1) Conduct the performance test annually.

(2) Conduct the performance test when your nitric acid production process is changed, specifically when abatement equipment is installed.

(3) If you requested Administrator approval for an alternative method of determining N_2O concentration under § 98.223(a)(2), you must conduct the performance test if your request has not been approved by the Administrator within 150 days of the end of the reporting year in which it was submitted.

(b) You must measure the N_2O concentration during the performance test using one of the methods in paragraphs (b)(1) through (b)(3) of this section.

(1) EPA Method 320 at 40 CFR part 63, appendix A, Measurement of Vapor Phase Organic and Inorganic Emissions by Extractive Fourier Transform Infrared (FTIR) Spectroscopy.

(2) ASTM D6348–03 Standard Test Method for Determination of Gaseous Compounds by Extractive Direct Interface Fourier Transform Infrared (FTIR) Spectroscopy (incorporated by reference in § 98.7).

(3) An equivalent method, with Administrator approval.

(c) You must determine the production rate(s) (100 percent basis) from each nitric acid train during the performance test according to paragraphs (c)(1) or (c)(2) of this section.

(1) Direct measurement of production and concentration (such as using flow meters, weigh scales, for production and concentration measurements).

(2) Existing plant procedures used for accounting purposes (i.e. dedicated tank-level and acid concentration measurements).

(d) You must conduct all performance tests in conjunction with the applicable EPA methods in 40 CFR part 60, appendices A–1 through A–4. Conduct three emissions test runs of 1 hour each. All QA/QC procedures specified in the reference test methods and any associated performance specifications apply. For each test, the facility must prepare an emission factor determination report that must include the items in paragraphs (d)(1) through (d)(3) of this section.

(1) Analysis of samples, determination of emissions, and raw data.

(2) All information and data used to derive the emissions factor(s).

(3) The production rate during each test and how it was determined.

(e) You must determine the monthly nitric acid production and the monthly nitric acid production during which N_2O abatement technology is operating from each nitric acid train according to the methods in paragraphs (c)(1) or (c)(2) of this section.

(f) You must determine the annual nitric acid production and the annual nitric acid production during which N_2O abatement technology is operating for each train by summing the respective monthly nitric acid production quantities.

§ 98.225 Procedures for estimating missing data.

A complete record of all measured parameters used in the GHG emissions calculations is required. Therefore, whenever a quality-assured value of a required parameter is unavailable, a substitute data value for the missing parameter shall be used in the calculations as specified in paragraphs (a) and (b) of this section.

(a) For each missing value of nitric acid production, the substitute data

shall be the best available estimate based on all available process data or data used for accounting purposes (such as sales records).

(b) For missing values related to the performance test, including emission factors, production rate, and N_2O concentration, you must conduct a new performance test according to the procedures in § 98.224 (a) through (d).

§ 98.226 Data reporting requirements.

In addition to the information required by § 98.3(c), each annual report must contain the information specified in paragraphs (a) through (o) of this section for each nitric acid production train.

(a) Train identification number.

(b) Annual process N_2O emissions from each nitric acid train (metric tons).

(c) Annual nitric acid production from each nitric acid train (tons, 100 percent acid basis).

(d) Annual nitric acid production from each nitric acid train during which N_2O abatement technology is operating (ton acid produced, 100 percent acid basis).

(e) Annual nitric acid production from the nitric acid facility (tons, 100 percent acid basis).

(f) Number of nitric acid trains.

(g) Number of abatement technologies (if applicable).

(h) Abatement technologies used (if applicable).

(i) Abatement technology destruction efficiency for each abatement technology (percent destruction).

(j) Abatement utilization factor for each abatement technology (fraction of annual production that abatement technology is operating).

(k) Type of nitric acid process used for each nitric acid train (low, medium, high, or dual pressure).

(l) Number of times in the reporting year that missing data procedures were followed to measure nitric acid production (months).

(m) If you conducted a performance test and calculated a site-specific emissions factor according to § 98.223(a)(1), each annual report must also contain the information specified in paragraphs (m)(1) through (m)(7) of this section for each nitric acid production facility.

(1) Emission factor calculated for each nitric acid train (lb N_2O/ton nitric acid, 100 percent acid basis).

(2) Test method used for performance test.

(3) Production rate per test run during performance test (tons nitric acid produced/hr, 100 percent acid basis).

(4) N_2O concentration per test run during performance test (ppm N_2O).

(5) Volumetric flow rate per test run during performance test (dscf/hr).

(6) Number of test runs during performance test.

(7) Number of times in the reporting year that a performance test had to be repeated (number).

(n) If you requested Administrator approval for an alternative method of determining N_2O concentration under § 98.223(a)(2), each annual report must also contain the information specified in paragraphs (n)(1) through (n)(4) of this section for each nitric acid production facility.

(1) Name of alternative method.

(2) Description of alternative method.

(3) Request date.

(4) Approval date.

(o) Total pounds of synthetic fertilizer produced through and total nitrogen contained in that fertilizer.

§ 98.227 Records that must be retained.

In addition to the information required by § 98.3(g), you must retain the records specified in paragraphs (a) through (g) of this section for each nitric acid production facility:

(a) Records of significant changes to process.

(b) Documentation of how process knowledge was used to estimate abatement technology destruction efficiency (if applicable).

(c) Performance test reports.

(d) Number of operating hours in the calendar year for each nitric acid train (hours).

(e) Annual nitric acid permitted production capacity (tons).

(f) Measurements, records, and calculations used to determine reported parameters.

(g) Documentation of the procedures used to ensure the accuracy of the measurements of all reported parameters, including but not limited to,

calibration of weighing equipment, flow meters, and other measurement devices. The estimated accuracy of measurements made with these devices must also be recorded, and the technical basis for these estimates must be provided.

§ 98.228 Definitions.

All terms used in this subpart have the same meaning given in the Clean Air Act and subpart A of this part.

Subpart W [Reserved]

Subpart X—Petrochemical Production

§ 98.240 Definition of the source category.

(a) The petrochemical production source category consists of all processes that produce acrylonitrile, carbon black, ethylene, ethylene dichloride, ethylene oxide, or methanol, except as specified in paragraphs (b) through (f) of this section. The source category includes processes that produce the petrochemical as an intermediate in the onsite production of other chemicals as well as processes that produce the petrochemical as an end product for sale or shipment offsite.

(b) A process that produces a petrochemical as a byproduct is not part of the petrochemical production source category.

(c) A facility that makes methanol, hydrogen, and/or ammonia from synthesis gas is part of the petrochemical source category if the annual mass of methanol produced exceeds the individual annual mass production levels of both hydrogen recovered as product and ammonia. The facility is part of subpart P of this part (Hydrogen Production) if the annual mass of hydrogen recovered as product exceeds the individual annual mass production levels of both methanol and ammonia. The facility is part of subpart G of this part (Ammonia Manufacturing) if the annual mass of ammonia produced exceeds the individual annual mass production levels of both hydrogen recovered as product and methanol.

(d) A direct chlorination process that is operated independently of an oxychlorination process to produce ethylene dichloride is not part of the petrochemical production source category.

(e) A process that produces bone black is not part of the petrochemical source category.

(f) A process that produces a petrochemical from bio-based feedstock is not part of the petrochemical production source category.

§ 98.241 Reporting threshold.

You must report GHG emissions under this subpart if your facility contains a petrochemical process as specified in § 98.240, and the facility meets the requirements of either § 98.2(a)(1) or (2).

§ 98.242 GHGs to report.

You must report the information in paragraphs (a) through (c) of this section:

(a) CO_2 CH_4, and N_2O process emissions from each petrochemical process unit. Process emissions include CO_2 generated by reaction in the process and by combustion of process off-gas in stationary combustion units and flares.

(1) If you comply with § 98.243(b) or (d), report under this subpart the calculated CO_2, CH_4, and N_2O emissions for each stationary combustion source and flare that burns any amount of petrochemical process off-gas.

(2) If you comply with § 98.243(c), report under this subpart the calculated CO_2 emissions for each petrochemical process unit.

(b) CO_2, CH_4, and N_2O combustion emissions from stationary combustion units and flares.

(1) If you comply with § 98.243(b) or (d), report these emissions from stationary combustion units that are associated with petrochemical process units and burn only supplemental fuel under subpart C of this part (General Stationary Fuel Combustion Sources) by following the requirements of subpart C.

(2) If you comply with § 98.243(c), report CO_2, CH_4, and N_2O combustion emissions under subpart C of this part (General Stationary Fuel Combustion Sources) by following the requirements of subpart C only for the combustion of

supplemental fuel. Determine the applicable Tier in subpart C of this part (General Stationary Fuel Combustion Sources) based on the maximum rated heat input capacity of the stationary combustion source.

(c) CO_2 captured. You must report the mass of CO_2 captured under, subpart PP of this part (Suppliers of Carbon Dioxide (CO_2) by following the requirements of subpart PP.

§ 98.243 Calculating GHG emissions.

(a) If you route all process vent emissions and emissions from combustion of process off-gas to one or more stacks and use CEMS on each stack to measure CO_2 emissions (except flare stacks), then you must determine process-based GHG emissions in accordance with paragraph (b) of this section. Otherwise, determine process-based GHG emissions in accordance with the procedures specified in paragraph (c) or (d) of this section.

(b) *Continuous emission monitoring system (CEMS).* Route all process vent emissions and emissions from combustion of process off-gas to one or more stacks and determine CO_2 emissions from each stack (except flare stacks) according to the Tier 4 Calculation Methodology requirements in subpart C of this part. For each stack (except flare stacks) that includes emissions from combustion of petrochemical process off-gas, calculate CH_4 and N_2O emissions in accordance with subpart C of this part (use the Tier 3 methodology and emission factors for ''Petroleum'' in Table C–2 of subpart C of this part). For each flare, calculate CO_2, CH_4, and N_2O emissions using the methodology specified in § 98.253(b)(1) through (b)(3).

(c) *Mass balance for each petrochemical process unit.* Calculate the emissions of CO_2 from each process unit, for each calendar month as described in paragraphs (c)(1) through (c)(5) of this section.

(1) For each gaseous and liquid feedstock and product, measure the volume or mass used or produced each calendar month with a flow meter by following the procedures specified in § 98.244(b)(2). Alternatively, for liquids, you may calculate the volume used or collected in each month based on measurements of the liquid level in a storage tank at least once per month (and just prior to each change in direction of the level of the liquid) following the procedures specified in § 98.244(b)(3). Fuels used for combustion purposes are not considered to be feedstocks.

(2) For each solid feedstock and product, measure the mass used or produced each calendar month by following the procedures specified in § 98.244(b)(1).

(3) Collect a sample of each feedstock and product at least once per month and determine the carbon content of each sample according to the procedures in § 98.244(b)(4). Alternatively, you may use the results of analyses conducted by a fuel or feedstock supplier, provided the sampling and analysis are conducted at least once per month using any of the procedures specified in § 98.244(b)(4). If multiple valid carbon content measurements are made during the monthly measurement period, average them arithmetically.

(4) If you determine that the monthly average concentration of a specific compound in a feedstock or product is greater than 99.5 percent by volume (or mass for liquids and solids), then as an alternative to the sampling and analysis specified in paragraph (c)(3) of this section, you may calculate the carbon content assuming 100 percent of that feedstock or product is the specific compound during periods of normal operation. You must maintain records of any determination made in accordance with this paragraph (c)(4) along with all supporting data, calculations, and other information. This alternative may not be used for products during periods of operation when off-specification product is produced. You must reevaluate determinations made under this paragraph (c)(4) after any process change that affects the feedstock or product composition. You must keep records of the process change and the corresponding composition determinations. If the feedstock or product composition changes so that the average monthly concentration falls below 99.5 percent, you are no longer permitted to use this alternative method.

(5) Calculate the CO_2 mass emissions for each petrochemical process unit

using Equations X–1 through X–4 of this section.

(i) *Gaseous feedstocks and products.* Use Equation X–1 of this section to calculate the net annual carbon input or output from gaseous feedstocks and products. Note that the result will be a negative value if there are no gaseous feedstocks in the process but there are gaseous products.

$$C_g = \sum_{n=1}^{12}\left[\sum_{i=1}^{j\ or\ k}\left[\left(F_{gf}\right)_{i,n} * \left(CC_{gf}\right)_{i,n} * \frac{\left(MW_f\right)_i}{MVC} - \left(P_{gp}\right)_{i,n} * \left(CC_{gp}\right)_{i,n} * \frac{\left(MW_p\right)_i}{MVC}\right]\right] \quad \text{(Eq. X-1)}$$

Where:

C_g = Annual net contribution to calculated emissions from carbon (C) in gaseous materials (kilograms/year, kg/yr).

$(F_{gf})_{i,n}$ = Volume of gaseous feedstock i introduced in month ''n'' (standard cubic feet, scf).

$(CC_{gf})_{i,n}$ = Average carbon content of the gaseous feedstock i for month ''n'' (kg C per kg of feedstock).

$(MW_f)_i$ = Molecular weight of gaseous feedstock i (kg/kg-mole).

MVC = Molar volume conversion factor (849.5 scf per kg-mole at standard conditions).

$(P_{gp})_{i,n}$ = Volume of gaseous product i produced in month ''n'' (scf).

$(CC_{gp})_{i,n}$ = Average carbon content of gaseous product i, including streams containing CO_2 recovered for sale or use in another process, for month ''n'' (kg C per kg of product).

$(MW_p)_i$ = Molecular weight of gaseous product i (kg/kg-mole).

j = Number of feedstocks.

k = Number of products.

(ii) *Liquid feedstocks and products.* Use Equation X–2 of this section to calculate the net carbon input or output from liquid feedstocks and products. Note that the result will be a negative value if there are no liquid feedstocks in the process but there are liquid products.

$$C_l = \sum_{n=1}^{12}\left[\sum_{i=1}^{j\ or\ k}\left[\left(F_{lf}\right)_{i,n} * \left(CC_{lf}\right)_{i,n} - \left(P_{lp}\right)_{i,n} * \left(CC_{lp}\right)_{i,n}\right]\right] \quad \text{(Eq. X-2)}$$

Where:

C_l = Annual net contribution to calculated emissions from carbon in liquid materials, including liquid organic wastes (kg/yr).

$(F_{lf})_{i,n}$ = Volume or mass of liquid feedstock i introduced in month ''n'' (gallons or kg).

$(CC_{lf})_{i,n}$ = Average carbon content of liquid feedstock i for month ''n'' (kg C per gallon or kg of feedstock).

$(P_{lp})_{i,n}$ = Volume or mass of liquid product i produced in month ''n'' (gallons or kg).

$(CC_{lp})_{i,n}$ = Average carbon content of liquid product i, including organic liquid wastes, for month ''n'' (kg C per gallon or kg of product).

j = Number of feedstocks.

k = Number of products.

(iii) *Solid feedstocks and products.* Use Equation X–3 of this section to calculate the net annual carbon input or output from solid feedstocks and products. Note that the result will be a negative value if there are no solid feedstocks in the process but there are solid products.

$$C_s = \sum_{n=1}^{12}\left\{\sum_{i=1}^{j\ or\ k}\left[\left(F_{sf}\right)_{i,n} * \left(CC_{sf}\right)_{i,n} - \left(P_{sp}\right)_{i,n} * \left(CC_{sp}\right)_{i,n}\right]\right\} \quad \text{(Eq. X-3)}$$

Where:

C_s = Annual net contribution to calculated emissions from carbon in solid materials (kg/yr).

$(F_{sf})_{i,n}$ = Mass of solid feedstock i introduced in month ''n'' (kg).

$(CC_{sf})_{i,n}$ = Average carbon content of solid feedstock i for month ''n'' (kg C per kg of feedstock).

$(P_{sp})_{i,n}$ = Mass of solid product i produced in month ''n'' (kg).

$(CC_{sp})_{i,n}$ = Average carbon content of solid product i in month ''n'' (kg C per kg of product).

j = Number of feedstocks.

k = Number of products.

(iv) *Annual emissions*. Use the results from Equations X–1 through X–3 of this section, as applicable, in Equation X–4 of this section to calculate annual CO_2 emissions.

$$CO_2 = 0.001 * \frac{44}{12} * \left(C_g + C_l + C_s\right) \qquad \text{(Eq. X-4)}$$

Where:

CO_2 = Annual CO_2 mass emissions from process operations and process off-gas combustion (metric tons/year).

0.001 = Conversion factor from kg to metric tons.

44 = Molecular weight of CO_2 (kg/kg-mole).

12 = Atomic weight of carbon (C) (kg/kg-mole).

(d) *Optional combustion methodology for ethylene production processes*. For any ethylene production process, calculate CO_2 emissions from combustion of fuel that contains ethylene process off-gas using the Tier 3 or Tier 4 methodology in subpart C of this part, and calculate CH_4 and N_2O emissions using the applicable procedures in § 98.33(c) (use the emission factors for ''Petroleum'' in Table C–2 of subpart C of this part (General Stationary Fuel Combustion Sources)). You are not required to use the same Tier for each stationary combustion unit that burns ethylene process off-gas. For each flare, calculate CO_2, CH_4, and N_2O emissions using the methodology specified in § 98.253(b)(1) through (b)(3).

§ 98.244 Monitoring and QA/QC requirements.

(a) If you use CEMS to determine emissions from process vents, you must comply with the procedures specified in § 98.34(c).

(b) If you use the mass balance methodology in § 98.243(c), use the procedures specified in paragraphs (b)(1) through (b)(4) of this section to determine feedstock and product flows and carbon contents.

(1) Operate and maintain belt scales or other weighing devices as described in Specifications, Tolerances, and Other Technical Requirements For Weighing and Measuring Devices NIST Handbook 44 (2009) (incorporated by reference, *see* § 98.7) or follow procedures specified by the measurement device manufacturer. Calibrate the measurement device according to the procedures specified by the method, the procedures specified by the manufacturer, or § 98.3(i). Recalibrate either biennially or at the minimum frequency specified by the manufacturer.

(2) Operate and maintain all flow meters for gas and liquid feedstocks and products by following the procedures in § 98.3(i) and using any of the flow meter methods specified in paragraphs (b)(2)(i) through (b)(2)(xv) of this section, as applicable, use a standard method published by a consensus-based standards organization (e.g., ASTM, API, etc.), or follow procedures specified by the flow meter manufacturer or § 98.3(i). Recalibrate each flow meter either biennially or at the minimum frequency specified by the manufacturer.

(i) ASME MFC–3M–2004 Measurement of Fluid Flow in Pipes Using Orifice, Nozzle, and Venturi (incorporated by reference, *see* § 98.7).

(ii) ASME MFC–4M–1986 (Reaffirmed 1997) Measurement of Gas Flow by Turbine Meters (incorporated by reference, *see* § 98.7).

(iii) ASME MFC–5M–1985 (Reaffirmed 1994) Measurement of Liquid Flow in Closed Conduits Using Transit-Time Ultrasonic Flowmeters (incorporated by reference, *see* § 98.7).

(iv) ASME MFC–6M–1998 Measurement of Fluid Flow in Pipes Using Vortex Flowmeters (incorporated by reference, *see* § 98.7).

(v) ASME MFC–7M–1987 (Reaffirmed 1992) Measurement of Gas Flow by Means of Critical Flow Venturi Nozzles (incorporated by reference, *see* § 98.7).

(vi) ASME MFC–9M–1988 (Reaffirmed 2001) Measurement of Liquid Flow in Closed Conduits by Weighing Method (incorporated by reference, *see* § 98.7).

(vii) ASME MFC–11M–2006 Measurement of Fluid Flow by Means of Coriolis Mass Flowmeters (incorporated by reference, *see* § 98.7).

(viii) ASME MFC–14M–2003 (Reaffirmed 2008), Measurement of Fluid Flow Using Small Bore Precision Orifice Meters (incorporated by reference, *see* § 98.7).

(ix) ASME MFC–16–2007 Measurement of Liquid Flow in Closed Conduits with Electromagnetic Flowmeters (incorporated by reference, *see* § 98.7).

(x) ASME MFC–18M–2001 (Reaffirmed 2006), Measurement of Fluid Flow Using Variable Area Meters (incorporated by reference, *see* § 98.7).

(xi) ASME MFC–22–2007 Measurement of Liquid by Turbine Flowmeters (incorporated by reference, *see* § 98.7).

(xii) AGA Report No. 3: Orifice Metering of Natural Gas and Other Related Hydrocarbon Fluids, Part 1: General Equations and Uncertainty Guidelines (1990), Part 2: Specification and Installation Requirements (2000) (incorporated by reference, *see* § 98.7).

(xiii) AGA Transmission Measurement Committee Report No. 7: Measurement of Natural Gas by Turbine Meter (2006)/February (incorporated by reference, *see* § 98.7).

(xiv) AGA Report No. 11: Measurement of Natural Gas by Coriolis Meter (2003) (incorporated by reference, *see* § 98.7).

(xv) ISO 8316: Measurement of Liquid Flow in Closed Conduits—Method by Collection of the Liquid in a Volumetric Tank (1987–10–01) First Edition (incorporated by reference, *see* § 98.7).

(3) Perform tank level measurements (if used to determine feedstock or product flows) according to any standard method published by a consensus-based standards organization (e.g., ASTM, API, etc.) or follow procedures specified by the measurement device manufacturer or § 98.3(i). Calibrate the measurement devices prior to the effective date of the rule, and recalibrate either biennially or at the minimum frequency specified by the manufacturer or § 98.3(i).

(4) Use any of the standard methods specified in paragraphs (b)(4)(i) through (b)(4)(x) of this section, as applicable, to determine the carbon content or composition of feedstocks and products and the average molecular weight of gaseous feedstocks and products. Calibrate instruments in accordance with the method and as specified in paragraphs (b)(4)(i) through (b)(4)(x), as applicable. For coal used as a feedstock, the samples for carbon content determinations shall be taken at a location that is representative of the coal feedstock used during the corresponding monthly period. For carbon black products, samples shall be taken of each grade or type of product produced during the monthly period. Samples of coal feedstock or carbon black product for carbon content determinations may be either grab samples collected and analyzed monthly or a composite of samples collected more frequently and analyzed monthly. Analyses conducted in accordance with methods specified in paragraphs (b)(4)(i) through (b)(4)(x) of this section may be performed by the owner or operator, by an indpendent laboratory, or by the supplier of a feedstock.

(i) ASTM D1945–03, Standard Test Method for Analysis of Natural Gas by Gas Chromatography (incorporated by reference, *see* § 98.7).

(ii) ASTM D6060–96 (Reapproved 2001) Standard Practice for Sampling of Process Vents With a Portable Gas Chromatograph (incorporated by reference, *see* § 98.7).

(iii) ASTM D2505–88(Reapproved 2004)e1 Standard Test Method for Ethylene, Other Hydrocarbons, and Carbon Dioxide in High-Purity Ethylene by Gas Chromatography (incorporated by reference, *see* § 98.7).

(iv) ASTM UOP539–97 Refinery Gas Analysis by Gas Chromatography (incorporated by reference, *see* § 98.7).

(v) ASTM D3176–89 (Reapproved 2002) Standard Practice Method for Ultimate

Analysis of Coal and Coke (incorporated by reference, *see* § 98.7).

(vi) ASTM D5291–02 (Reapproved 2007) Standard Test Methods for Instrumental Determination of Carbon, Hydrogen, and Nitrogen in Petroleum Products and Lubricants (incorporated by reference, *see* § 98.7).

(vii) ASTM D5373–08 Standard Test Methods for Instrumental Determination of Carbon, Hydrogen, and Nitrogen in Laboratory Samples of Coal (incorporated by reference, *see* § 98.7).

(viii) Methods 8031, 8021, or 8015 in ''Test Methods for Evaluating Solid Waste, Physical/Chemical Methods,'' EPA Publication No. SW–846, Third Edition, September 1986, as amended by Update I, November 15, 1992.

(ix) Method 18 at 40 CFR part 60, appendix A–6.

(x) Performance Specification 9 in 40 CFR part 60, appendix B for continuous online gas analyzers. The 7-day calibration error test period must be completed prior to the effective date of the rule.

§ 98.245 Procedures for estimating missing data.

For missing feedstock flow rates, product flow rates, and carbon contents, use the same procedures as for missing flow rates and carbon contents for fuels as specified in § 98.35.

§ 98.246 Data reporting requirements.

In addition to the information required by § 98.3(c), each annual report must contain the information specified in paragraphs (a), (b), or (c) of this section, as appropriate for each process unit.

(a) If you use the mass balance methodology in § 98.243(c), you must report the information specified in paragraphs (a)(1) through (a)(10) of this section for each type of petrochemical produced, reported by process unit.

(1) The petrochemical process unit ID number or other appropriate descriptor.

(2) The type of petrochemical produced, names of other products, and names of carbon-containing feedstocks.

(3) Annual CO_2 emissions calculated using Equation X–4 of this subpart.

(4) Each of the monthly volume, mass, and carbon content values used in Equations X–1 through X–3 of this subpart (i.e., the directly measured values, substitute values, or the calculated values based on other measured data such as tank levels or gas composition) and the molecular weights for gaseous feedstocks and products used in Equation X–1 of this subpart. Indicate whether you used the alternative to sampling and analysis specified in § 98.243(c)(4).

(5) Annual quantity of each type of petrochemical produced from each process unit (metric tons).

(6) Name of each method listed in § 98.244 used to determine a measured parameter (or description of manufacturer's recommended method).

(7) The dates and summarized results (e.g., percent calibration error) of the calibrations of each measurement device.

(8) Identification of each combustion unit that burned both process off-gas and supplemental fuel.

(9) If you comply with the alternative to sampling and analysis specified in § 98.243(c)(4), the amount of time during which off-specification product was produced, the volume or mass of off-specification product produced, and if applicable, the date of any process change that reduced the composition to less than 99.5 percent.

(10) You may elect to report the flow and carbon content of wastewater, and you may elect to report the carbon content of hydrocarbons in fugitive emissions and in process vents that are not controlled with a combustion device. These values may be estimated based on engineering analyses. These values are not to be used in the mass balance calculation.

(b) If you use CEMS to measure CO_2 emissions in accordance with § 98.243(b), then you must report the relevant information required under § 98.36 for the Tier 4 Calculation Methodology and the information listed in paragraphs (b)(1) through (b)(6) of this section.

(1) For CEMS used on stacks for stationary combustion units, report the relevant information required under § 98.36 for the Tier 4 calculation methodology.

(2) For CEMS used on stacks that are not used for stationary combustion

units, report the information required under § 98.36(e)(2)(vi) and (vii).

(3) The petrochemical process unit ID or other appropriate descriptor, and the type of petrochemical produced.

(4) The CO_2 emissions from each stack and the combined CO_2 emissions from all stacks (except flare stacks) that handle process vent emissions and emissions from stationary combustion units that burn process off-gas for the petrochemical process unit. If a stationary combustion source serves multiple petrochemical process units or units other than the petrochemical process unit, estimate based on engineering judgment the fraction of fuel energy and emissions attributable to each petrochemical process unit.

(5) The CH_4 and N_2O emissions from each stack and the combined CH_4 and N_2O emissions from all stationary combustion units that burn process off-gas from the petrochemical process unit, the cumulative annual heat input used in Equation C–10 in § 98.33(c) of this subpart, and the annual flow of each fuel on which this heat input is based.

(6) ID or other appropriate descriptor of each stationary combustion unit that burns process off-gas.

(7) Information listed in § 98.256(e) of subpart Y of this part for each flare that burns process off-gas.

(8) Annual quantity of each type of petrochemical produced from each process unit (metric tons).

(c) If you comply with the combustion methodology specified in § 98.243(d), you must report under this subpart the information listed in paragraphs (c)(1) through (c)(4) of this section.

(1) For each stationary combustion unit that burns ethylene process off-gas (or group of stationary sources with a common pipe), the relevant information listed in § 98.36 for the selected Tier 3 or Tier 4 methodology. If a stationary combustion source serves multiple ethylene process units or units other than the ethylene process unit, estimate based on engineering judgment the fraction of fuel energy and emissions attributable to each ethylene process unit.

(2) Information listed in § 98.256(e) for each flare that burns ethylene process off-gas.

(3) Name and annual quantity of each feedstock.

(4) Annual quantity of each type of petrochemical produced from each process unit (metric tons).

§ 98.247 Records that must be retained.

In addition to the recordkeeping requirements in § 98.3(g), you must retain the records specified in paragraphs (a) through (c) of this section, as applicable.

(a) If you comply with the CEMS measurement methodology in § 98.243(b), then you must retain under this subpart the records required for the Tier 4 Calculation Methodology in § 98.37.

(b) If you comply with the mass balance methodology in § 98.243(c), then you must retain records of the information listed in paragraphs (b)(1) through (b)(3) of this section.

(1) Results of feedstock or product composition determinations conducted in accordance with § 98.243(c)(4).

(2) Start and end times and calculated carbon contents for time periods when off-specification product is produced, if you comply with the alternative methodology in § 98.243(c)(4) for determining carbon content of feedstock or product.

(3) A part of the monitoring plan required under § 98.3(g)(5), record the estimated accuracy of measurement devices and the technical basis for these estimates.

(c) If you comply with the combustion methodology in § 98.243(d), then you must retain under this subpart the records required for the Tier 3 and/or Tier 4 Calculation Methodologies in § 98.37.

§ 98.248 Definitions.

Except as specified in this section, all terms used in this subpart have the same meaning given in the Clean Air Act and subpart A of this part.

Product, as used in § 98.243, means each of the following carbon-containing outputs from a process: the petrochemical, recovered byproducts, and liquid organic wastes that are not incinerated onsite. Product does not include process vent emissions, fugitive emissions, or wastewater.

Subpart Y—Petroleum Refineries

§ 98.250 Definition of source category.

(a) A petroleum refinery is any facility engaged in producing gasoline, gasoline blending stocks, naphtha, kerosene, distillate fuel oils, residual fuel oils, lubricants, or asphalt (bitumen) through distillation of petroleum or through redistillation, cracking, or reforming of unfinished petroleum derivatives, except as provided in paragraph (b) of this section.

(b) For the purposes of this subpart, facilities that distill only pipeline transmix (off-spec material created when different specification products mix during pipeline transportation) are not petroleum refineries, regardless of the products produced.

(c) This source category consists of the following sources at petroleum refineries: Catalytic cracking units; fluid coking units; delayed coking units; catalytic reforming units; coke calcining units; asphalt blowing operations; blowdown systems; storage tanks; process equipment components (compressors, pumps, valves, pressure relief devices, flanges, and connectors) in gas service; marine vessel, barge, tanker truck, and similar loading operations; flares; sulfur recovery plants; and non-merchant hydrogen plants (i.e., hydrogen plants that are owned or under the direct control of the refinery owner and operator).

§ 98.251 Reporting threshold.

You must report GHG emissions under this subpart if your facility contains a petroleum refineries process and the facility meets the requirements of either § 98.2(a)(1) or (a)(2).

§ 98.252 GHGs to report.

You must report:

(a) CO_2, CH_4, and N_2O combustion emissions from stationary combustion units and from each flare. Calculate and report these emissions under subpart C of this part (General Stationary Fuel Combustion Sources) by following the requirements of subpart C, except for CO_2 emissions from combustion of refinery fuel gas. For CO_2 emissions from combustion of fuel gas, use either equation C–5 in subpart C of this part or the Tier 4 methodology in subpart C of this part. You may aggregate units, monitor common stacks, or monitor common (fuel) pipes as provided in § 98.36(c) when calculating and reporting emissions from stationary combustion units.

(b) CO_2, CH_4, and N_2O coke burn-off emissions from each catalytic cracking unit, fluid coking unit, and catalytic reforming unit under this subpart.

(c) CO_2 emissions from sour gas sent off site for sulfur recovery operations under this subpart. You must follow the calculation methodologies from § 98.253(f) and the monitoring and QA/QC methods, missing data procedures, reporting requirements, and recordkeeping requirements of this subpart.

(d) CO_2 process emissions from each on-site sulfur recovery plant under this subpart.

(e) CO_2, CH_4, and N_2O emissions from each coke calcining unit under this subpart.

(f) CO_2 and CH_4 emissions from asphalt blowing operations under this subpart.

(g) CH_4 emissions from equipment leaks, storage tanks, loading operations, delayed coking units, and uncontrolled blowdown systems under this subpart.

(h) CO_2, CH_4, and N_2O emissions from each process vent not specifically included in paragraphs (a) through (g) of this section under this subpart.

(i) CO_2 and CH_4 emissions from non-merchant hydrogen production under this subpart. You must follow the calculation methodologies, monitoring and QA/QC methods, missing data procedures, reporting requirements, and recordkeeping requirements of subpart P of this part.

§ 98.253 Calculating GHG emissions.

(a) Calculate GHG emissions required to be reported in § 98.252(b) through (i) using the applicable methods in paragraphs (b) through (n) of this section.

(b) For flares, calculate GHG emissions according to the requirements in paragraphs (b)(1) through (b)(3) of this section.

(1) Calculate the CO_2 emissions according to the applicable requirements in paragraphs (b)(1)(i) through (b)(1)(iii) of this section.

(i) *Flow measurement*. If you have a continuous flow monitor on the flare, you must use the measured flow rates when the monitor is operational and the flow rate is within the calibrated range of the measurement device to calculate the flare gas flow. If you do not have a continuous flow monitor on the flare and for periods when the monitor is not operational or the flow rate is outside the calibrated range of the measurement device, you must use engineering calculations, company records, or similar estimates of volumetric flare gas flow.

(ii) *Heat value or carbon content measurement*. If you have a continuous higher heating value monitor or gas composition monitor on the flare or if you monitor these parameters at least weekly, you must use the measured heat value or carbon content value in calculating the CO_2 emissions from the flare using the applicable methods in paragraphs (b)(1)(ii)(A) and (b)(1)(ii)(B).

(A) If you monitor gas composition, calculate the CO_2 emissions from the flare using Equation Y–1 of this section. If daily or more frequent measurement data are available, you must use daily values when using Equation Y–1 of this section; otherwise, use weekly values.

$$CO_2 = 0.98 \times 0.001 \times \left(\sum_{p=1}^{n} \left[\frac{44}{12} \times (Flare)_p \times \frac{(MW)_p}{MVC} \times (CC)_p \right] \right) \qquad \text{(Eq. Y-1)}$$

Where:

CO_2 = Annual CO_2 emissions for a specific fuel type (metric tons/year).

0.98 = Assumed combustion efficiency of a flare.

0.001 = Unit conversion factor (metric tons per kilogram, mt/kg).

n = Number of measurement periods. The minimum value for n is 52 (for weekly measurements); the maximum value for n is 366 (for daily measurements during a leap year).

p = Measurement period index.

44 = Molecular weight of CO_2 (kg/kg-mole).

12 = Atomic weight of C (kg/kg-mole).

$(Flare)_p$ = Volume of flare gas combusted during measurement period (standard cubic feet per period, scf/period). If a mass flow meter is used, measure flare gas flow rate in kg/period and replace the term ''$(MW)_p$/MVC'' with ''1''.

$(MW)_p$ = Average molecular weight of the flare gas combusted during measurement period (kg/kg-mole). If measurements are taken more frequently than daily, use the arithmetic average of measurement values within the day to calculate a daily average.

MVC = Molar volume conversion factor (849.5 scf/kg-mole).

$(CC)_p$ = Average carbon content of the flare gas combusted during measurement period (kg C per kg flare gas). If measurements are taken more frequently than daily, use the arithmetic average of measurement values within the day to calculate a daily average.

(B) If you monitor heat content but do not monitor gas composition, calculate the CO_2 emissions from the flare using Equation Y–2 of this section. If daily or more frequent measurement data are available, you must use daily values when using Equation Y–2 of this section; otherwise, use weekly values.

$$CO_2 = 0.98 \times 0.001 \times \sum_{p=1}^{n} \left[(Flare)_p \times (HHV)_p \times EmF \right] \qquad \text{(Eq. Y-2)}$$

Where:

CO_2 = Annual CO_2 emissions for a specific fuel type (metric tons/year).

0.98 = Assumed combustion efficiency of a flare.

0.001 = Unit conversion factor (metric tons per kilogram, mt/kg).

n = Number of measurement periods. The minimum value for n is 52 (for weekly measurements); the maximum value for n is 366 (for daily measurements during a leap year).

p = Measurement period index.

$(Flare)_p$ = Volume of flare gas combusted during measurement period (million (MM) scf/period). If a mass flow meter is used, you must also measure molecular weight and convert the mass flow to a volumetric flow as follows: Flare[MMscf] = 0.000001 × Flare[kg] × MVC/$(MW)_p$, where MVC is the molar volume conversion factor (849.5 scf/kg-mole) and $(MW)_p$ is the average molecular weight of the flare gas combusted during measurement period (kg/kg-mole).

$(HHV)_p$ = Higher heating value for the flare gas combusted during measurement period (British thermal units per scf, Btu/scf = MMBtu/MMscf). If measurements are taken more frequently than daily, use the arithmetic average of measurement values within the day to calculate a daily average.

EmF = Default CO_2 emission factor of 60 kilograms CO_2/MMBtu (HHV basis).

(iii) *Alternative to heat value or carbon content measurements.* If you do not measure the higher heating value or carbon content of the flare gas at least weekly, determine the quantity of gas discharged to the flare separately for periods of routine flare operation and for periods of start-up, shutdown, or malfunction, and calculate the CO_2 emissions as specified in paragraphs (b)(1)(iii)(A) through (b)(1)(iii)(C) of this section.

(A) For periods of start-up, shutdown, or malfunction, use engineering calculations and process knowledge to estimate the carbon content of the flared gas for each start-up, shutdown, or malfunction event exceeding 500,000 scf/day.

(B) For periods of normal operation, use the average heating value measured for the fuel gas for the heating value of the flare gas. If heating value is not measured, the heating value may be estimated from historic data or engineering calculations.

(C) Calculate the CO_2 emissions using Equation Y–3 of this section.

$$CO_2 = 0.98 \times 0.001 \times \left(Flare_{Norm} \times HHV \times EmF + \sum_{p=1}^{n} \left[\frac{44}{12} \times \left(Flare_{SSM} \right)_p \times \frac{(MW)_p}{MVC} \times (CC)_p \right] \right) \quad \text{(Eq. Y-3)}$$

Where:

CO_2 = Annual CO_2 emissions for a specific fuel type (metric tons/year).

0.98 = Assumed combustion efficiency of a flare.

0.001 = Unit conversion factor (metric tons per kilogram, mt/kg).

$Flare_{Norm}$ = Annual volume of flare gas combusted during normal operations from company records, (million (MM) standard cubic feet per year, MMscf/year).

HHV = Higher heating value for fuel gas or flare gas from company records (British thermal units per scf, Btu/scf = MMBtu/MMscf).

EmF = Default CO_2 emission factor for flare gas of 60 kilograms CO_2/MMBtu (HHV basis).

n = Number of start-up, shutdown, and malfunction events during the reporting year exceeding 500,000 scf/day.

p = Start-up, shutdown, and malfunction event index.

44 = Molecular weight of CO_2 (kg/kg-mole).

12 = Atomic weight of C (kg/kg-mole).

$(Flare_{SSM})_p$ = Volume of flare gas combusted during indexed start-up, shutdown, or malfunction event from engineering calculations, (scf/event).

$(MW)_p$ = Average molecular weight of the flare gas, from the analysis results or engineering calculations for the event (kg/kg-mole).

MVC = Molar volume conversion factor (849.5 scf/kg-mole).

$(CC)_p$ = Average carbon content of the flare gas, from analysis results or engineering calculations for the event (kg C per kg flare gas).

(2) Calculate CH_4 using Equation Y–4 of this section.

$$CH_4 = \left(CO_2 \times \frac{EmF_{CH4}}{EmF} \right) + CO_2 \times \frac{0.02}{0.98} \times \frac{16}{44} \times f_{CH4} \quad \text{(Eq. Y-4)}$$

Where:

CH_4 = Annual methane emissions from flared gas (metric tons CH_4/year).

CO_2 = Emission rate of CO_2 from flared gas calculated in paragraph (b)(1) of this section (metric tons/year).

EmF_{CH4} = Default CH_4 emission factor for ''PetroleumProducts'' from Table C–2 of subpart C of this part (General Stationary Fuel Combustion Sources) (kg CH_4/MMBtu).

EmF = Default CO_2 emission factor for flare gas of 60 kg CO_2/MMBtu (HHV basis).

0.02/0.98 = Correction factor for flare combustion efficiency.

16/44 = Correction factor ratio of the molecular weight of CH_4 to CO_2.

f_{CH4} = Weight fraction of carbon in the flare gas prior to combustion that is contributed by methane from measurement values or engineering calculations (kg C in methane in flare gas/kg C in flare gas); default is 0.4.

(3) Calculate N_2O emissions using Equation Y–5 of this section.

$$N_2O = \left(CO_2 \times \frac{EmF_{N2O}}{EmF} \right) \qquad \text{(Eq. Y-5)}$$

Where:

N_2O = Annual nitrous oxide emissions from flared gas (metric tons N_2O/year).

CO_2 = Emission rate of CO_2 from flared gas calculated in paragraph (b)(1) of this section (metric tons/year).

EmF_{N2O} = Default N_2O emission factor for ''PetroleumProducts'' from Table C–2 of subpart C of this part (General Stationary Fuel Combustion Sources) (kg N_2O/MMBtu).

EmF = Default CO_2 emission factor for flare gas of 60 kg CO_2/MMBtu (HHV basis).

(c) For catalytic cracking units and traditional fluid coking units, calculate the GHG emissions using the applicable methods described in paragraphs (c)(1) through (c)(5) of this section.

(1) If you operate and maintain a CEMS that measures CO_2 emissions according to subpart C of this part (General Stationary Fuel Combustion Sources), you must calculate and report CO_2 emissions as provided in paragraphs (c)(1)(i) and (c)(1)(ii) of this section. Other catalytic cracking units and traditional fluid coking units must either install a CEMS that complies with the Tier 4 Calculation Methodology in subpart C of this part (General Stationary Combustion Sources), or follow the requirements of paragraphs (c)(2) or (3) of this section.

(i) Calculate CO_2 emissions by following the Tier 4 Calculation Methodology specified in §98.33(a)(4) and all associated requirements for Tier 4 in subpart C of this part (General Stationary Fuel Combustion Sources).

(ii) If a CO boiler or other post-combustion device is used, you must also calculate the CO_2 emissions from the fuel fired to the CO boiler or post-combustion device using the applicable methods for stationary combustion units in subpart C of this part. Calculate the process emissions from the catalytic cracking unit or fluid coking unit as the difference in the CO_2 CEMS emissions and the calculated combustion emissions associated with the CO boiler.

(2) For catalytic cracking units and fluid coking units with rated capacities greater than 10,000 barrels per stream day (bbls/sd) that do not use a continuous CO_2 CEMS for the final exhaust stack, you must continuously or no less frequently than hourly monitor the O_2, CO_2, and (if necessary) CO concentrations in the exhaust stack from the catalytic cracking unit regenerator or fluid coking unit burner prior to the combustion of other fossil fuels and calculate the CO_2 emissions according to the requirements of paragraphs (c)(2)(i) through (c)(2)(iii) of this section:

(i) Calculate the CO_2 emissions from each catalytic cracking unit and fluid coking unit using Equation Y–6 of this section.

$$CO_2 = \sum_{p=1}^{n} \left[(Q_r)_p \times \frac{(\%CO_2 + \%CO)_p}{100\%} \times \frac{44}{MVC} \times 0.001 \right] \qquad \text{(Eq. Y-6)}$$

Where:

CO_2 = Annual CO_2 mass emissions (metric tons/year).

Q_r = Volumetric flow rate of exhaust gas from the fluid catalytic cracking unit regenerator or fluid coking unit burner prior to the combustion of other fossil fuels (dry standard cubic feet per hour, dscfh).

$\%CO_2$ = Hourly average percent CO_2 concentration in the exhaust gas stream from the fluid catalytic cracking unit regenerator or fluid coking unit burner (percent by volume—dry basis).

%CO = Hourly average percent CO concentration in the exhaust gas stream from the fluid catalytic cracking unit regenerator or fluid coking unit burner (percent by volume—dry basis). When there is no post-combustion device, assume %CO to be zero.

44 = Molecular weight of CO_2 (kg/kg-mole).

MVC = Molar volume conversion factor (849.5 scf/kg-mole).

0.001 = Conversion factor (metric ton/kg).

n = Number of hours in calendar year.

(ii) Either continuously monitor the volumetric flow rate of exhaust gas from the fluid catalytic cracking unit regenerator or fluid coking unit burner prior to the combustion of other fossil fuels or calculate the volumetric flow rate of this exhaust gas stream using Equation Y–7 of this section.

$$Q_r = \frac{\left(79 * Q_a + \left(100 - \%O_{oxy}\right) * Q_{oxy}\right)}{100 - \%CO_2 - \%CO - \%O_2} \qquad \text{(Eq. Y-7)}$$

Where:

Q_r = Volumetric flow rate of exhaust gas from the fluid catalytic cracking unit regenerator or fluid coking unit burner prior to the combustion of other fossil fuels (dscfh).

Q_a = Volumetric flow rate of air to the fluid catalytic cracking unit regenerator or fluid coking unit burner, as determined from control room instrumentation (dscfh).

Q_{oxy} = Volumetric flow rate of oxygen enriched air to the fluid catalytic cracking unit regenerator or fluid coking unit burner as determined from control room instrumentation (dscfh).

$\%O_2$ = Hourly average percent oxygen concentration in exhaust gas stream from the fluid catalytic cracking unit regenerator or fluid coking unit burner (percent by volume—dry basis).

$\%O_{oxy}$ = O_2 concentration in oxygen enriched gas stream inlet to the fluid catalytic cracking unit regenerator or fluid coking unit burner based on oxygen purity specifications of the oxygen supply used for enrichment (percent by volume—dry basis).

$\%CO_2$ = Hourly average percent CO_2 concentration in the exhaust gas stream from the fluid catalytic cracking unit regenerator or fluid coking unit burner (percent by volume—dry basis).

%CO = Hourly average percent CO concentration in the exhaust gas stream from the fluid catalytic cracking unit regenerator or fluid coking unit burner (percent by volume—dry basis). When no auxiliary fuel is burned and a continuous CO monitor is not required under 40 CFR part 63 subpart UUU, assume %CO to be zero.

(iii) If you have a CO boiler that uses auxiliary fuels or combusts materials other than catalytic cracking unit or fluid coking unit exhaust gas, you must determine the CO_2 emissions resulting from the combustion of these fuels or other materials following the requirements in subpart C and report those emissions by following the requirements of subpart C of this part.

(3) For catalytic cracking units and fluid coking units with rated capacities of 10,000 barrels per stream day (bbls/sd) or less that do not use a continuous CO_2 CEMS for the final exhaust stack, comply with the requirements in paragraph (c)(3)(i) of this section or paragraphs (c)(3)(ii) and (c)(3)(iii) of this section, as applicable.

(i) If you continuously or no less frequently than daily monitor the O_2, CO_2, and (if necessary) CO concentrations in the exhaust stack from the catalytic cracking unit regenerator or fluid coking unit burner prior to the combustion of other fossil fuels, you must calculate the CO_2 emissions according to the requirements of paragraphs (c)(2)(i) through (c)(2)(iii) of this section, except that daily averages are allowed and the summation can be performed on a daily basis.

(ii) If you do not monitor at least daily the O_2, CO_2, and (if necessary) CO concentrations in the exhaust stack from the catalytic cracking unit regenerator or fluid coking unit burner prior to the combustion of other fossil fuels, calculate the CO_2 emissions from each catalytic cracking unit and fluid coking unit using Equation Y–8 of this section.

$$CO_2 = Q_{unit} \times (CBF \times 0.001) \times CC \times \frac{44}{12} \qquad \text{(Eq. Y-8)}$$

Where:

CO_2 = Annual CO_2 mass emissions (metric tons/year).

Q_{unit} = Annual throughput of unit from company records (barrels (bbls) per year, bbl/yr).

CBF = Coke burn-off factor from engineering calculations (kg coke per barrel of feed); default for catalytic cracking units = 7.3; default for fluid coking units = 11.

0.001 = Conversion factor (metric ton/kg).

CC = Carbon content of coke based on measurement or engineering estimate (kg C per kg coke); default = 0.94.

44/12 = Ratio of molecular weight of CO_2 to C (kg CO_2 per kg C).

(iii) If you have a CO boiler that uses auxiliary fuels or combusts materials other than catalytic cracking unit or fluid coking unit exhaust gas, you must determine the CO_2 emissions resulting from the combustion of these fuels or other materials following the requirements in subpart C of this part (General Stationary Fuel Combustion Sources) and report those emissions by following the requirements of subpart C of this part.

(4) Calculate CH_4 emissions using either unit specific measurement data, a unit-specific emission factor based on a source test of the unit, or Equation Y–9 of this section.

$$CH_4 = \left(CO_2 * \frac{EmF_2}{EmF_1} \right) \qquad \text{(Eq. Y-9)}$$

Where:

CH_4 = Annual methane emissions from coke burn-off (metric tons CH_4/year).

CO_2 = Emission rate of CO_2 from coke burn-off calculated in paragraphs (c)(1), (c)(2), (e)(1), (e)(2), (g)(1), or (g)(2) of this section, as applicable (metric tons/year).

EmF_1 = Default CO_2 emission factor for petroleum coke from Table C–1 of subpart C of this part (General Stationary Fuel Combustion Sources) (kg CO_2/MMBtu).

EmF_2 = Default CH_4 emission factor for ''PetroleumProducts'' from Table C–2 of subpart C of this part (General Stationary Fuel Combustion Sources) (kg CH_4/MMBtu).

(5) Calculate N_2O emissions using either unit specific measurement data, a unit-specific emission factor based on a source test of the unit, or Equation Y–10 of this section.

$$N_2O = \left(CO_2 * \frac{EmF_3}{EmF_1} \right) \qquad \text{(Eq. Y-10)}$$

Where:

N_2O = Annual nitrous oxide emissions from coke burn-off (mt N_2O/year).

CO_2 = Emission rate of CO_2 from coke burn-off calculated in paragraphs (c)(1), (c)(2), (e)(1), (e)(2), (g)(1), or (g)(2) of this section, as applicable (metric tons/year).

EmF_1 = Default CO_2 emission factor for petroleum coke from Table C–1 of subpart C of this part (General Stationary Fuel Combustion Sources) (kg CO_2/MMBtu).

EmF_3 = Default N_2O emission factor for ''PetroleumProducts'' from Table C–2 of subpart C of this part (kg N_2O/MMBtu).

(d) For fluid coking units that use the flexicoking design, the GHG emissions from the resulting use of the low value fuel gas must be accounted for only once. Typically, these emissions will be accounted for using the methods described in subpart C of this part (General Stationary Fuel Combustion Sources). Alternatively, you may use the methods in paragraph (c) of this section provided that you do not otherwise account for the subsequent combustion of this low value fuel gas.

(e) For catalytic reforming units, calculate the CO_2 emissions using the applicable methods described in paragraphs (e)(1) through (e)(3) of this section and calculate the CH_4 and N_2O emissions using the methods described

in paragraphs (c)(4) and (c)(5) of this section, respectively.

(1) If you operate and maintain a CEMS that measures CO_2 emissions according to subpart C of this part (General Stationary Fuel Combustion Sources), you must calculate CO_2 emissions as provided in paragraphs (c)(1)(i) and (c)(1)(ii) of this section. Other catalytic reforming units must either install a CEMS that complies with the Tier 4 Calculation Methodology in subpart C of this part, or follow the requirements of paragraph (e)(2) or (e)(3) of this section.

(2) If you continuously or no less frequently than daily monitor the O_2, CO_2, and (if necessary) CO concentrations in the exhaust stack from the catalytic reforming unit catalyst regenerator prior to the combustion of other fossil fuels, you must calculate the CO_2 emissions according to the requirements of paragraphs (c)(2)(i) through (c)(2)(iii) of this section.

(3) Calculate CO_2 emissions from the catalytic reforming unit catalyst regenerator using Equation Y–11 of this section.

$$CO_2 = \sum_{1}^{n} \left[\left(CB_Q \right)_n \times CC \times \frac{44}{12} \times 0.001 \right] \qquad \text{(Eq. Y-11)}$$

Where:

CO_2 = Annual CO_2 emissions (metric tons/year).

CB_Q = Coke burn-off quantity per regeneration cycle from engineering estimates (kg coke/cycle).

n = Number of regeneration cycles in the calendar year.

CC = Carbon content of coke based on measurement or engineering estimate (kg C per kg coke); default = 0.94.

44/12 = Ratio of molecular weight of CO_2 to C (kg CO_2 per kg C).

0.001 = Conversion factor (metric ton/kg).

(f) For on-site sulfur recovery plants, calculate and report CO_2 process emissions from sulfur recovery plants according to the requirements in paragraphs (f)(1) through (f)(5) of this section. Combustion emissions from the sulfur recovery plant (e.g., from fuel combustion in the Claus burner or the tail gas treatment incinerator) must be reported under subpart C of this part (General Stationary Fuel Combustion Sources). For the purposes of this subpart, the sour gas stream for which monitoring is required according to paragraphs (f)(2) through (f)(5) of this section is not considered a fuel.

(1) If you operate and maintain a CEMS that measures CO_2 emissions according to subpart C of this part, you must calculate CO_2 emissions under this subpart by following the Tier 4 Calculation Methodology specified in § 98.33(a)(4) and all associated requirements for Tier 4 in subpart C of this part (General Stationary Fuel Combustion Sources). You must monitor fuel use in the Claus burner, tail gas incinerator, or other combustion sources that discharge via the final exhaust stack from the sulfur recovery plant and calculate the combustion emissions from the fuel use according to subpart C of this part. Calculate the process emissions from the sulfur recovery plant as the difference in the CO_2 CEMS emissions and the calculated combustion emissions associated with the sulfur recovery plant final exhaust stack. Other sulfur recovery plants must either install a CEMS that complies with the Tier 4 Calculation Methodology in subpart C, or follow the requirements of paragraphs (f)(2) through (f)(5) of this section.

(2) Flow measurement. If you have a continuous flow monitor on the sour gas feed to the sulfur recovery plant, you must use the measured flow rates when the monitor is operational to calculate the sour gas flow rate. If you do not have a continuous flow monitor on the sour gas feed to the sulfur recovery plant, you must use engineering calculations, company records, or similar estimates of volumetric sour gas flow.

(3) Carbon content. If you have a continuous gas composition monitor capable of measuring carbon content on the sour gas feed to the sulfur recovery plant or if you monitor gas composition for carbon content on a routine basis, you must use the measured carbon content value. Alternatively, you may develop a site-specific carbon content factor using limited measurement data or engineering estimates or use the default factor of 0.20.

(4) Calculate the CO_2 emissions from each sulfur recovery plant using Equation Y–12 of this section.

$$CO_2 = F_{SG} * \frac{44}{MVC} * MF_C * 0.001 \qquad \text{(Eq. Y-12)}$$

Where:

CO_2 = Annual CO_2 emissions (metric tons/year).

F_{SG} = Volumetric flow rate of sour gas feed (including sour water stripper gas) to the sulfur recovery plant (scf/year).

44 = Molecular weight of CO_2 (kg/kg-mole).

MVC = Molar volume conversion factor (849.5 scf/kg-mole).

MF_C = Mole fraction of carbon in the sour gas to the sulfur recovery plant (kg-mole C/kg-mole gas); default = 0.20.

0.001 = Conversion factor, kg to metric tons.

(5) If tail gas is recycled to the front of the sulfur recovery plant and the recycled flow rate and carbon content is included in the measured data under paragraphs (f)(2) and (f)(3) of this section, respectively, then the annual CO_2 emissions calculated in paragraph (f)(4) of this section must be corrected to avoid double counting these emissions. You may use engineering estimates to perform this correction or assume that the corrected CO_2 emissions are 95 percent of the uncorrected value calculated using Equation Y–12 of this section.

(g) For coke calcining units, calculate GHG emissions according to the applicable provisions in paragraphs (g)(1) through (g)(3) of this section.

(1) If you operate and maintain a CEMS that measures CO_2 emissions according to subpart C of this part, you must calculate and report CO_2 emissions under this subpart by following the Tier 4 Calculation Methodology specified in §98.33(a)(4) and all associated requirements for Tier 4 in subpart C of this part (General Stationary Fuel Combustion Sources). You must monitor fuel use in the coke calcining unit that discharges via the final exhaust stack from the coke calcining unit and calculate the combustion emissions from the fuel use according to subpart C of this part. Calculate the process emissions from the coke calcining unit as the difference in the CO_2 CEMS emissions and the calculated combustion emissions associated with the coke calcining unit final exhaust stack. Other coke calcining units must either install a CEMS that complies with the Tier 4 Calculation Methodology in subpart C of this part, or follow the requirements of paragraph (g)(2) of this section.

(2) Calculate the CO_2 emissions from the coke calcining unit using Equation Y–13 of this section.

$$CO_2 = \frac{44}{12} * \left(M_{in} * CC_{GC} - \left(M_{out} + M_{dust}\right) * CC_{MPC}\right) \qquad \text{(Eq. Y-13)}$$

Where:

CO_2 = Annual CO_2 emissions (metric tons/year).

M_{in} = Annual mass of green coke fed to the coke calcining unit from facility records (metric tons/year).

CC_{GC} = Average mass fraction carbon content of green coke from facility measurement

data (metric ton carbon/metric ton green coke).

M_{out} = Annual mass of marketable petroleum coke produced by the coke calcining unit from facility records (metric tons petroleum coke/year).

M_{dust} = Annual mass of petroleum coke dust collected in the dust collection system of the coke calcining unit from facility records (metric ton petroleum coke dust/year).

CC_{MPC} = Average mass fraction carbon content of marketable petroleum coke produced by the coke calcining unit from facility measurement data (metric ton carbon/metric ton petroleum coke).

44 = Molecular weight of CO_2 (kg/kg-mole).

12 = Atomic weight of C (kg/kg-mole).

(3) For all coke calcining units, use the CO_2 emissions from the coke calcining unit calculated in paragraphs (g)(1) or (g)(2), as applicable, and calculate CH_4 using the methods described in paragraph (c)(4) of this section and N_2O emissions using the methods described in paragraph (c)(5) of this section.

(h) For asphalt blowing operations, calculate GHG emissions according to the requirements in paragraph (j) of this section or according to the applicable provisions in paragraphs (h)(1) and (h)(2) of this section.

(1) For uncontrolled asphalt blowing operations or asphalt blowing operations controlled by vapor scrubbing, calculate CO_2 and CH_4 emissions using Equations Y–14 and Y–15 of this section, respectively.

$$CO_2 = \left(Q_{AB} \times EF_{AB.CO2}\right) \qquad \text{(Eq. Y-14)}$$

Where:

CO_2 = Annual CO_2 emissions from uncontrolled asphalt blowing (metric tons CO_2/year).

Q_{AB} = Quantity of asphalt blown (million barrels per year, MMbbl/year).

$EF_{AB,CO2}$ = Emission factor for CO_2 from uncontrolled asphalt blowing from facility-specific test data (metric tons CO_2/MMbbl asphalt blown); default = 1,100.

$$CH_4 = \left(Q_{AB} \times EF_{AB,CH4}\right) \qquad \text{(Eq. Y-15)}$$

Where:

CH_4 = Annual methane emissions from uncontrolled asphalt blowing (metric tons CH_4/year).

Q_{AB} = Quantity of asphalt blown (million barrels per year, MMbbl/year).

EF_{AB,CH_4} = Emission factor for CH_4 from uncontrolled asphalt blowing from facility-specific test data (metric tons CH_4/MMbbl asphalt blown); default = 580.

(2) For asphalt blowing operations controlled by thermal oxidizer or flare, calculate CO_2 and CH_4 emissions using Equations Y–16 and Y–17 of this section, respectively, provided these emissions are not already included in the flare emissions calculated in paragraph (b) of this section or in the stationary combustion unit emissions required under subpart C of this part (General Stationary Fuel Combustion Sources).

$$CO_2 = 0.98 \times \left(Q_{AB} \times CEF_{AB} \times \frac{44}{12}\right) \qquad \text{(Eq. Y-16)}$$

Where:

CO_2 = Annual CO_2 emissions from controlled asphalt blowing (metric tons CO_2/year).

0.98 = Assumed combustion efficiency of thermal oxidizer or flare.

Q_{AB} = Quantity of asphalt blown (MMbbl/year).

CEF_{AB} = Carbon emission factor from asphalt blowing from facility-specific test data (metric tons C/MMbbl asphalt blown); default = 2,750.

44 = Molecular weight of CO_2 (kg/kg-mole).

12 = Atomic weight of C (kg/kg-mole).

$$CH_4 = 0.02 \times \left(Q_{AB} \times EF_{AB,CH4}\right) \qquad \text{(Eq. Y-17)}$$

Where:

CH_4 = Annual methane emissions from controlled asphalt blowing (metric tons CH_4/year).

0.02 = Fraction of methane uncombusted in thermal oxidizer or flare based on assumed 98% combustion efficiency.

Q_{AB} = Quantity of asphalt blown (million barrels per year, MMbbl/year).

EF_{AB,CH_4} = Emission factor for CH_4 from uncontrolled asphalt blowing from facility-specific test data (metric tons CH_4/MMbbl asphalt blown); default = 580.

(i) For delayed coking units, calculate the CH_4 emissions from the depressurization of the coking unit vessel (i.e., the ''coke drum'') to atmosphere using either of the methods provided in paragraphs (i)(1) or (i)(2), provided no water or steam is added to the vessel once it is vented to the atmosphere. You must use the method in paragraph (i)(1) of this section if you add water or steam to the vessel after it is vented to the atmosphere.

(1) Use the process vent method in paragraph (j) of this section and also calculate the CH_4 emissions from the subsequent opening of the vessel for coke cutting operations using Equation Y–18 of this section. If you have coke drums or vessels of different dimensions, use Equation Y–18 for each set of coke drums or vessels of the same size and sum the resultant emissions across each set of coke drums or vessels to calculate the CH_4 emissions for all delayed coking units.

$$CH_4 = \left(N \times H \times \frac{(P_{CV} + 14.7)}{14.7} \times f_{void} \times \frac{\pi \times D^2}{4} \times \frac{16}{MVC} \times MF_{CH4} \times 0.001 \right) \qquad \text{(Eq. Y-18)}$$

Where:

CH_4 = Annual methane emissions from the delayed coking unit vessel opening (metric ton/year).

N = Cumulative number of vessel openings for all delayed coking unit vessels of the same dimensions during the year.

H = Height of coking unit vessel (feet).

P_{CV} = Gauge pressure of the coking vessel when opened to the atmosphere prior to coke cutting or, if the alternative method provided in paragraph (i)(2) of this section is used, gauge pressure of the coking vessel when depressurization gases are first routed to the atmosphere (pounds per square inch gauge, psig).

14.7 = Assumed atmospheric pressure (pounds per square inch, psi).

f_{void} = Volumetric void fraction of coking vessel prior to steaming (cf gas/cf of vessel); default = 0.6.

D = Diameter of coking unit vessel (feet).

16 = Molecular weight of CH_4 (kg/kg-mole).

MVC = Molar volume conversion factor (849.5 scf/kg-mole).

MF_{CH_4} = Mole fraction of methane in coking vessel gas (kg-mole CH_4/kg-mole gas, wet basis); default value is 0.01.

0.001 = Conversion factor (metric ton/kg).

(2) Calculate the CH_4 emissions from the depressurization vent and subsequent opening of the vessel for coke cutting operations using Equation Y–18 of this section and the pressure of the coking vessel when the depressurization gases are first routed to the atmosphere. If you have coke drums or vessels of different dimensions, use Equation Y–18 for each set of coke drums or vessels of the same size and sum the resultant emissions across each set of coke drums or vessels to calculate the CH_4 emissions for all delayed coking units.

(j) For each process vent not covered in paragraphs (a) through (i) of this section that can be reasonably expected to contain greater than 2 percent by volume CO_2 or greater than 0.5 percent by volume of CH_4 or greater than 0.01 percent by volume (100 parts per million) of N_2O, calculate GHG emissions using the Equation Y–19 of this section. You must use Equation Y–19 of this section for catalytic reforming unit depressurization and purge vents when methane is used as the purge gas or if you elected this method as an alternative to the methods in paragraphs (h)(1) or (h)(2) of this section.

$$E_x = \sum_{p=1}^{N} \left((VR)_p \times (MF_x)_p \times \frac{MW_x}{MVC} \times (VT)_p \times 0.001 \right) \qquad \text{(Eq. Y-19)}$$

Where:

E_X = Annual emissions of each GHG from process vent (metric ton/yr).

N = Number of venting events per year.

P = Index of venting events.

$(VR)_p$ = Average volumetric flow rate of process gas during the event (scf per hour).

$(MF_X)_p$ = Mole fraction of GHG x in process vent during the event (kg-mol of GHG x/kg-mol vent gas).

MW_X = Molecular weight of GHG x (kg/kg-mole); use 44 for CO_2 or N_2O and 16 for CH_4.

MVC = Molar volume conversion factor (849.5 scf/kg-mole).

$(VT)_p$ = Venting time for the event, (hours).

0.001 = Conversion factor (metric ton/kg).

(k) For uncontrolled blowdown systems, you must either use the methods for process vents in paragraph (j) of this section or calculate CH_4 emissions using Equation Y–20 of this section. Blowdown systems where the uncondensed gas stream is routed to a flare or similar control device is considered to be controlled and is not required to estimate emissions under this paragraph (k).

$$CH_4 = \left(Q_{\mathrm{Re}_f} \times EF_{BD} \times \frac{16}{MVC} \times 0.001 \right) \qquad \text{(Eq. Y-20)}$$

Where:

CH_4 = Methane emission rate from blowdown systems (mt CH_4/year).

Q_{Ref} = Quantity of crude oil plus the quantity of intermediate products received from off site that are processed at the facility (MMbbl/year).

EF_{BD} = Methane emission factor for uncontrolled blown systems (scf CH_4/MMbbl); default is 137,000.

16 = Molecular weight of CH_4 (kg/kg-mole).

MVC = Molar volume conversion factor (849.5 scf/kg-mole).

0.001 = Conversion factor (metric ton/kg).

(l) For equipment leaks, calculate CH_4 emissions using the method specified in either paragraph (l)(1) or (l)(2) of this section.

(1) Use process-specific methane composition data (from measurement data or process knowledge) and any of the emission estimation procedures provided in the Protocol for Equipment Leak Emissions Estimates (EPA–453/R–95–017, NTIS PB96–175401).

(2) Use Equation Y–21 of this section.

$$CH_4 = \left(0.4 \times N_{CD} + 0.2 \times N_{PU1} + 0.1 \times N_{PU2} + 4.3 \times N_{H2} + 6 \times N_{FGS} \right) \qquad \text{(Eq. Y-21)}$$

Where:

CH_4 = Annual methane emissions from equipment leaks (metric tons/year).

N_{CD} = Number of atmospheric crude oil distillation columns at the facility.

N_{PU1} = Cumulative number of catalytic cracking units, coking units (delayed or fluid), hydrocracking, and full-range distillation columns (including depropanizer and debutanizer distillation columns) at the facility.

N_{PU2} = Cumulative number of hydrotreating/hydrorefining units, catalytic reforming units, and visbreaking units at the facility.

N_{H2} = Total number of hydrogen plants at the facility.

N_{FGS} = Total number of fuel gas systems at the facility.

(m) For storage tanks, except as provided in paragraph (m)(3) of this section, calculate CH_4 emissions using the applicable methods in paragraphs (m)(1) and (m)(2) of this section.

(1) For storage tanks other than those processing unstabilized crude oil, you must either calculate CH_4 emissions from storage tanks that have a

vapor-phase methane concentration of 0.5 volume percent or more using tank-specific methane composition data (from measurement data or product knowledge) and the AP–42 emission estimation methods provided in Section 7.1 of the AP–42: ''Compilation of Air Pollutant Emission Factors, Volume 1: Stationary Point and Area Sources'', including TANKS Model (Version 4.09D) or similar programs, or estimate CH_4 emissions from storage tanks using Equation Y–22 of this section.

$$CH_4 = \left(0.1 \times Q_{\mathrm{Re}f}\right) \qquad \text{(Eq. Y-22)}$$

Where:

CH_4 = Annual methane emissions from storage tanks (metric tons/year).

0.1 = Default emission factor for storage tanks (metric ton CH_4/MMbbl).

Q_{Ref} = Quantity of crude oil plus the quantity of intermediate products received from off site that are processed at the facility (MMbbl/year).

(2) For storage tanks that process unstabilized crude oil, calculate CH_4 emissions from the storage of unstabilized crude oil using either tank-specific methane composition data (from measurement data or product knowledge) and direct measurement of the gas generation rate or by using Equation Y–23 of this section.

$$CH_4 = \left(995{,}000 \times Q_{un} \times \Delta P\right) \times MF_{CH4} \times \frac{16}{MVC} \times 0.001 \qquad \text{(Eq. Y-23)}$$

Where:

CH_4 = Annual methane emissions from storage tanks (metric tons/year).

Q_{un} = Quantity of unstabilized crude oil received at the facility (MMbbl/year).

ΔP = Pressure differential from the previous storage pressure to atmospheric pressure (pounds per square inch, psi).

MF_{CH4} = Mole fraction of CH_4 in vent gas from the unstabilized crude oil storage tank from facility measurements (kg-mole CH_4/kg-mole gas); use 0.27 as a default if measurement data are not available.

995,000 = Correlation Equation factor (scf gas per MMbbl per psi).

16 = Molecular weight of CH_4 (kg/kg-mole).

MVC = Molar volume conversion factor (849.5 scf/kg-mole).

0.001 = Conversion factor (metric ton/kg).

(3) You do not need to calculate CH_4 emissions from storage tanks that meet any of the following descriptions:

(i) Units permanently attached to conveyances such as trucks, trailers, rail cars, barges, or ships;

(ii) Pressure vessels designed to operate in excess of 204.9 kilopascals and without emissions to the atmosphere;

(iii) Bottoms receivers or sumps;

(iv) Vessels storing wastewater; or

(v) Reactor vessels associated with a manufacturing process unit.

(n) For crude oil, intermediate, or product loading operations for which the equilibrium vapor-phase concentration of methane is 0.5 volume percent or more, calculate CH_4 emissions from loading operations using product-specific, vapor-phase methane composition data (from measurement data or process knowledge) and the emission estimation procedures provided in Section 5.2 of the AP–42: ''Compilation of Air Pollutant Emission Factors, Volume 1: Stationary Point and Area Sources.'' For loading operations in which the equilibrium vapor-phase concentration of methane is less than 0.5 volume percent, you may assume zero methane emissions.

§ 98.254 Monitoring and QA/QC requirements.

(a) Fuel flow meters, gas composition monitors, and heating value monitors associated with stationary combustion sources must follow the monitoring and QA/QC requirements in § 98.34.

(b) All flow meters, gas composition monitors, and heating value monitors that are used to provide data for the GHG emissions calculations in this subpart for sources other than stationary combustion sources shall be calibrated according to the procedures in the applicable methods specified in paragraphs (c) through (e) of this section, the procedures specified by the manufacturer, or §§ 98.3(i). Recalibrate each flow meter either biennially

(every two years) or at the minimum frequency specified by the manufacturer. Recalibrate each gas composition monitor and heating value monitor either annually or at the minimum frequency specified by the manufacturer.

(c) For flare or sour gas flow meters, operate and maintain the flow meter using any of the following methods, a method published by a consensus-based standards organization (e.g., ASTM, API, etc.) or follow the procedures specified by the flow meter manufacturer. Flow meters must have a rated accuracy of ±5 percent or lower.

(1) ASME MFC–3M–2004 Measurement of Fluid Flow in Pipes Using Orifice, Nozzle, and Venturi (incorporated by reference, *see* § 98.7).

(2) ASME MFC–4M–1986 (Reaffirmed 1997) Measurement of Gas Flow by Turbine Meters (incorporated by reference, see § 98.7).

(3) ASME MFC–6M–1998 Measurement of Fluid Flow in Pipes Using Vortex Flowmeters (incorporated by reference, *see* § 98.7).

(4) ASME MFC–7M–1987 (Reaffirmed 1992) Measurement of Gas Flow by Means of Critical Flow Venturi Nozzles (incorporated by reference, *see* § 98.7).

(5) ASME MFC–11M–2006 Measurement of Fluid Flow by Means of Coriolis Mass Flowmeters (incorporated by reference, *see* § 98.7).

(6) ASME MFC–14M–2003 Measurement of Fluid Flow Using Small Bore Precision Orifice Meters (incorporated by reference, *see* § 98.7).

(7) ASME MFC–18M–2001 Measurement of Fluid Flow Using Variable Area Meters (incorporated by reference, *see* § 98.7).

(8) AGA Report No. 11 Measurement of Natural Gas by Coriolis Meter (2003) (incorporated by reference, *see* § 98.7).

(d) Determine flare gas composition using any of the following methods.

(1) Method 18 at 40 CFR part 60, appendix A–6.

(2) ASTM D1945–03 Standard Test Method for Analysis of Natural Gas by Gas Chromatography (incorporated by reference, *see* § 98.7).

(3) ASTM D1946–90 (Reapproved 2006) Standard Practice for Analysis of Reformed Gas by Gas Chromatography (incorporated by reference, *see* § 98.7).

(4) GPA 2261–00 Analysis for Natural Gas and Similar Gaseous Mixtures by Gas Chromatography (incorporated by reference, *see* § 98.7).

(5) UOP539–97 Refinery Gas Analysis by Gas Chromatography (incorporated by reference, *see* § 98.7).

(e) Determine flare gas higher heating value using any of the following methods.

(1) ASTM D4809–06 Standard Test Method for Heat of Combustion of Liquid Hydrocarbon Fuels by Bomb Calorimeter (Precision Method) (incorporated by reference, *see* § 98.7).

(2) ASTM D240–02 (Reapproved 2007) Standard Test Method for Heat of Combustion of Liquid Hydrocarbon Fuels by Bomb Calorimeter (incorporated by reference, *see* § 98.7).

(3) ASTM D1826–94 (Reapproved 2003) Standard Test Method for Calorific (Heating) Value of Gases in Natural Gas Range by Continuous Recording Calorimeter (incorporated by reference, *see* § 98.7).

(4) ASTM D3588–98 (Reapproved 2003) Standard Practice for Calculating Heat Value, Compressibility Factor, and Relative Density of Gaseous Fuels (incorporated by reference, *see* § 98.7).

(5) ASTM D4891–89 (Reapproved 2006) Standard Test Method for Heating Value of Gases in Natural Gas Range by Stoichiometric Combustion (incorporated by reference, *see* § 98.7).

(f) For exhaust gas flow meters used to comply with the requirements in § 98.253(c)(2)(ii), install, operate, calibrate, and maintain exhaust gas flow meter according to the requirements in 40 CFR 63.1572(c) or according to the following requirements.

(1) Locate the flow meter(s) and other necessary equipment such as straightening vanes in a position that provides representative flow; reduce swirling flow or abnormal velocity distributions due to upstream and downstream disturbances.

(2) Use a flow rate meter with an accuracy within ±5 percent.

(3) Use a continuous monitoring system capable of correcting for the temperature, pressure, and moisture content to output flow in dry standard cubic feet (standard conditions as defined in § 98.6).

(4) Install, operate, and maintain each continuous monitoring system according to the manufacturer's specifications and requirements.

(g) For exhaust gas $CO_2/CO/O_2$ composition monitors used to comply with the requirements in § 98.253(c)(2), install, operate, calibrate, and maintain exhaust gas composition monitors according to the requirements in 40 CFR 60.105a(b)(2) or 40 CFR 63.1572(a) or according to the manufacturer's specifications and requirements.

(h) Determine the mass of petroleum coke as required by Equation Y–13 of this subpart using mass measurement equipment meeting the requirements for commercial weighing equipment as described in Specifications, Tolerances, and Other Technical Requirements For Weighing and Measuring Devices, NIST Handbook 44 (2009) (incorporated by reference, see § 98.7). Calibrate the measurement device according to the procedures specified by the method, the procedures specified by the manufacturer, or § 98.3(i). Recalibrate either biennially or at the minimum frequency specified by the manufacturer.

(i) Determine the carbon content of petroleum coke as required by Equation Y–13 of this subpart using any one of the following methods. Calibrate the measurement device according to procedures specified by the method or procedures specified by the measurement device manufacturer.

(1) ASTM D3176–89 (Reapproved 2002) Standard Practice for Ultimate Analysis of Coal and Coke (incorporated by reference, *see* § 98.7).

(2) ASTM D5291–02 (Reapproved 2007) Standard Test Methods for Instrumental Determination of Carbon, Hydrogen, and Nitrogen in Petroleum Products and Lubricants (incorporated by reference, *see* § 98.7).

(3) ASTM D5373–08 Standard Test Methods for Instrumental Determination of Carbon, Hydrogen, and Nitrogen in Laboratory Samples of Coal (incorporated by reference, *see* § 98.7).

(j) Determine the quantity of petroleum process streams using company records. These quantities include the quantity of asphalt blown, quantity of crude oil plus the quantity of intermediate products received from off site, and the quantity of unstabilized crude oil received at the facility.

(k) The owner or operator shall document the procedures used to ensure the accuracy of the estimates of fuel usage, gas composition, and heating value including but not limited to calibration of weighing equipment, fuel flow meters, and other measurement devices. The estimated accuracy of measurements made with these devices shall also be recorded, and the technical basis for these estimates shall be provided.

(l) All CO_2 CEMS and flow rate monitors used for direct measurement of GHG emissions must comply with the QA procedures in § 98.34(c).

§ 98.255 Procedures for estimating missing data.

A complete record of all measured parameters used in the GHG emissions calculations is required (e.g., concentrations, flow rates, fuel heating values, carbon content values). Therefore, whenever a quality-assured value of a required parameter is unavailable (e.g., if a CEMS malfunctions during unit operation or if a required fuel sample is not taken), a substitute data value for the missing parameter shall be used in the calculations.

(a) For stationary combustion sources, use the missing data procedures in subpart C of this part.

(b) For each missing value of the heat content, carbon content, or molecular weight of the fuel, substitute the arithmetic average of the quality-assured values of that parameter immediately preceding and immediately following the missing data incident. If the ''after'' value is not obtained by the end of the reporting year, you may use the ''before'' value for the missing data substitution. If, for a particular parameter, no quality-assured data are available prior to the missing data incident, the substitute data value shall be the first quality-assured value obtained after the missing data period.

(c) For missing CO_2, CO, O_2, CH_4, or N_2O concentrations, gas flow rate, and percent moisture, the substitute data values shall be the best available estimate(s) of the parameter(s), based on all available process data (e.g., processing rates, operating hours, etc.). The

owner or operator shall document and keep records of the procedures used for all such estimates.

(d) For hydrogen plants, use the missing data procedures in subpart P of this part.

§ 98.256 Data reporting requirements.

In addition to the reporting requirements of § 98.3(c), you must report the information specified in paragraphs (a) through (q) of this section.

(a) For combustion sources, follow the data reporting requirements under subpart C of this part (General Stationary Fuel Combustion Sources).

(b) For hydrogen plants, follow the data reporting requirements under subpart P of this part (Hydrogen Production).

(c)–(d) [Reserved]

(e) For flares, owners and operators shall report:

(1) The flare ID number (if applicable).

(2) A description of the type of flare (steam assisted, air-assisted).

(3) A description of the flare service (general facility flare, unit flare, emergency only or back-up flare).

(4) The calculated CO_2, CH_4, and N_2O annual emissions for each flare, expressed in metric tons of each pollutant emitted.

(5) A description of the method used to calculate the CO_2 emissions for each flare (e.g., reference section and equation number).

(6) If you use Equation Y–1 of this subpart, the annual volume of flare gas combusted (in scf/year) and the annual average molecular weight (in kg/kg-mole) and carbon content of the flare gas (in kg carbon per kg flare gas).

(7) If you use Equation Y–2 of this subpart, the annual volume of flare gas combusted (in million (MM) scf/year) and the annual average higher heating value of the flare gas (in MMBtu per MMscf).

(8) If you use Equation Y–3 of this subpart, the annual volume of flare gas combusted (in MMscf/year) during normal operations, the annual average higher heating value of the flare gas (in MMBtu/MMscf), the number of SSM events exceeding 500,000 scf/day, and the volume of gas flared (in scf/event) and the average molecular weight (in kg/kg-mole) and carbon content of the flare gas (in kg carbon per kg flare) for each SSM event over 500,000 scf/day.

(9) The fraction of carbon in the flare gas contributed by methane used in Equation Y–4 of this subpart and the basis for its value.

(f) For catalytic cracking units, traditional fluid coking units, and catalytic reforming units, owners and operators shall report:

(1) The unit ID number (if applicable).

(2) A description of the type of unit (fluid catalytic cracking unit, thermal catalytic cracking unit, traditional fluid coking unit, or catalytic reforming unit).

(3) Maximum rated throughput of the unit, in bbl/stream day.

(4) The calculated CO_2, CH_4, and N_2O annual emissions for each unit, expressed in metric tons of each pollutant emitted.

(5) A description of the method used to calculate the CO_2 emissions for each unit (e.g., reference section and equation number).

(6) If you use a CEMS, the relevant information required under § 98.36(e)(2)(vi) for the Tier 4 Calculation Methodology, the CO_2 annual emissions as measured by the CEMS (unadjusted to remove CO_2 combustion emissions associated with a CO boiler, if present) and the process CO_2 emissions as calculated according to § 98.253(c)(1)(ii). Report the CO_2 annual emissions associated with fuel combustion under subpart C of this part (General Stationary Fuel Combustion Sources).

(7) If you use Equation Y–6 of this subpart, the annual average exhaust gas flow rate, $\%CO_2$, and %CO.

(8) If you use Equation Y–7 of this subpart, the annual average flow rate of inlet air and oxygen-enriched air, $\%O_2$, $\%O_{oxy}$, $\%CO_2$, and %CO.

(9) If you use Equation Y–8 of this subpart, the coke burn-off factor, annual throughput of unit, and the average carbon content of coke and the basis for the value.

(10) Indicate whether you use a measured value, a unit-specific emission factor, or a default emission factor for CH_4 emissions. If you use a unit-specific emission factor for CH_4, report the

units of measure for the unit-specific factor, the activity data for calculating emissions (e.g., if the emission factor is based on coke burn-off rate, the annual quantity of coke burned), and the basis for the factor.

(11) Indicate whether you use a measured value, a unit-specific emission factor, or a default emission factor for N_2O emissions. If you use a unit-specific emission factor for N_2O, report the units of measure for the unit-specific factor, the activity data for calculating emissions (e.g., if the emission factor is based on coke burn-off rate, the annual quantity of coke burned), and the basis for the factor.

(12) If you use Equation Y–11 of this subpart, the number of regeneration cycles during the reporting year, the average coke burn-off quantity per cycle, and the average carbon content of the coke.

(g) For fluid coking unit of the flexicoking type, the owner or operator shall report:

(1) The unit ID number (if applicable).

(2) A description of the type of unit.

(3) Maximum rated throughput of the unit, in bbl/stream day.

(4) Indicate whether the GHG emissions from the low heat value gas are accounted for in subpart C of this part or § 98.253(c).

(5) If the GHG emissions for the low heat value gas are calculated at the flexicoking unit, also report the calculated annual CO_2, CH_4, and N_2O emissions for each unit, expressed in metric tons of each pollutant emitted, and the applicable equation input parameters specified in paragraphs (f)(7) through (f)(11) of this section.

(h) For sulfur recovery plants and for emissions from sour gas sent off-site for sulfur recovery, the owner and operator shall report:

(1) The plant ID number (if applicable).

(2) Maximum rated throughput of each independent sulfur recovery plant, in metric tons sulfur produced/stream day.

(3) The calculated CO_2 annual emissions for each sulfur recovery plant, expressed in metric tons. The calculated annual CO_2 emissions from sour gas sent off-site for sulfur recovery, expressed in metric tons.

(4) If you use Equation Y–12 of this subpart, the annual volumetric flow to the sulfur recovery plant (in scf/year) and the annual average mole fraction of carbon in the sour gas (in kg-mole C/kg-mole gas).

(5) If you recycle tail gas to the front of the sulfur recovery plant, indicate whether the recycled flow rate and carbon content are included in the measured data under § 98.253(f)(2) and (3). Indicate whether a correction for CO_2 emissions in the tail gas was used in Equation Y–12. If so, then report the value of the correction, the annual volume of recycled tail gas (in scf/year) and the annual average mole fraction of carbon in the tail gas (in kg-mole C/kg-mole gas). Indicate whether you used the default (95%) or a unit specific correction, and if used, report the approach used.

(6) If you use a CEMS, the relevant information required under § 98.36(e)(2)(vi) for the Tier 4 Calculation Methodology, the CO_2 annual emissions as measured by the CEMS and the annual process CO_2 emissions calculated according to § 98.253(f)(1). Report the CO_2 annual emissions associated with fuel combustion subpart C of this part (General Stationary Fuel Combustion Sources).

(i) For coke calcining units, the owner and operator shall report:

(1) The unit ID number (if applicable).

(2) Maximum rated throughput of the unit, in metric tons coke calcined/stream day.

(3) The calculated CO_2, CH_4, and N_2O annual emissions for each unit, expressed in metric tons of each pollutant emitted.

(4) A description of the method used to calculate the CO_2 emissions for each unit (e.g., reference section and equation number).

(5) If you use Equation Y–13 of this subpart, annual mass and carbon content of green coke fed to the unit, the annual mass and carbon content of marketable coke produced, and the annual mass of coke dust collected in dust collection systems.

(6) If you use a CEMS, the relevant information required under

§ 98.36(e)(2)(vi) for the Tier 4 Calculation Methodology, the CO_2 annual emissions as measured by the CEMS and the annual process CO_2 emissions calculated according to § 98.253(g)(1). Report the CO_2 annual emissions associated with fuel combustion under subpart C of this part (General Stationary Fuel Combustion Sources).

(7) Indicate whether you use a measured value, a unit-specific emission factor or a default for CH_4 emissions. If you use a unit-specific emission factor for CH_4, the unit-specific emission factor for CH_4, the units of measure for the unit-specific factor, the activity data for calculating emissions (e.g., if the emission factor is based on coke burn-off rate, the annual quantity of coke burned), and the basis for the factor.

(8) If you use a site-specific emission factor in Equation Y–10 of this subpart, the site-specific emission factor and the basis of the factor.

(j) For asphalt blowing operations, the owner or operator shall report:

(1) The unit ID number (if applicable).

(2) The quantity of asphalt blown (in Million bbl) at the facility in the reporting year.

(3) The type of control device used to reduce methane (and other organic) emissions from the unit.

(4) The calculated annual CO_2 and CH_4 emissions for each unit, expressed in metric tons of each pollutant emitted.

(5) If you use Equation Y–14 of this subpart, the CO_2 emission factor used and the basis for the value.

(6) If you use Equation Y–15 of this subpart, the CH_4 emission factor used and the basis for the value.

(7) If you use Equation Y–16 of this subpart, the carbon emission factor used and the basis for the value.

(8) If you use Equation Y–17 of this subpart, the CH_4 emission factor used and the basis for the value.

(k) For delayed coking units, the owner or operator shall report:

(1) The cumulative annual CH_4 emissions (in metric tons of each pollutant emitted) for all delayed coking units at the facility.

(2) A description of the method used to calculate the CH_4 emissions for each unit (e.g., reference section and equation number).

(3) The total number of delayed coking units at the facility, the total number of delayed coking drums at the facility, and for each coke drum or vessel: the dimensions, the typical gauge pressure of the coking drum when first vented to the atmosphere, typical void fraction, the typical drum outage (i.e. the unfilled distance from the top of the drum, in feet), and annual number of coke-cutting cycles.

(4) For each set of coking drums that are the same dimensions: The number of coking drums in the set, the height and diameter of the coke drums (in feet), the cumulative number of vessel openings for all delayed coking drums in the set, the typical venting pressure (in psig), void fraction (in cf gas/cf of vessel), and the mole fraction of methane in coking gas (in kg-mole CF_4/kg-mole gas, wet basis).

(5) The basis for the volumetric void fraction of the coke vessel prior to steaming and the basis for the mole fraction of methane in the coking gas.

(l) For process vents subject to § 98.253(j), the owner or operator shall report:

(1) The vent ID number (if applicable).

(2) The unit or operation associated with the emissions.

(3) The type of control device used to reduce methane (and other organic) emissions from the unit, if applicable.

(4) The calculated annual CO_2, CH_4, and N_2O emissions for each vent, expressed in metric tons of each pollutant emitted.

(5) The annual volumetric flow discharged to the atmosphere (in scf), mole fraction of each GHG above the concentration threshold, and for intermittent vents, the number of venting events and the cumulative venting time.

(m) For uncontrolled blowdown systems, the owner or operator shall report:

(1) The cumulative annual CH_4 emissions (in metric tons of each pollutant emitted) for uncontrolled blowdown systems.

(2) The total quantity (in Million bbl) of crude oil plus the quantity of intermediate products received from off-site

that are processed at the facility in the reporting year.

(3) The methane emission factor used for uncontrolled blowdown systems and the basis for the value.

(n) For equipment leaks, the owner or operator shall report:

(1) The cumulative CH_4 emissions (in metric tons of each pollutant emitted) for all equipment leak sources.

(2) The method used to calculate the reported equipment leak emissions.

(3) The number of each type of emission source listed in Equation Y–21 of this subpart at the facility.

(o) For storage tanks, the owner or operator shall report:

(1) The cumulative annual CH_4 emissions (in metric tons of each pollutant emitted) for all storage tanks, except for those used to process unstabilized crude oil.

(2) The method used to calculate the reported storage tank emissions for storage tanks other than those processing unstabilized crude (AP–42, TANKS 4.09D, Equation Y–22 of this subpart, other).

(3) The total quantity (in MMbbl) of crude oil plus the quantity of intermediate products received from off-site that are processed at the facility in the reporting year.

(4) The cumulative CH_4 emissions (in metric tons of each pollutant emitted) for storage tanks used to process unstabilized crude oil.

(5) The method used to calculate the reported storage tank emissions for storage tanks processing unstabilized crude oil.

(6) The quantity of unstabilized crude oil received during the calendar year (in MMbbl), the average pressure differential (in psi), and the mole fraction of CH_4 in vent gas from the unstabilized crude oil storage tank, and the basis for the mole fraction.

(7) The tank-specific methane composition data and the gas generation rate data, if you did not use Equation Y–23.

(p) For loading operations, the owner or operator shall report:

(1) The cumulative annual CH_4 emissions (in metric tons of each pollutant emitted) for loading operations.

(2) The quantity and types of materials loaded by vessel type (barge, tanker, marine vessel, etc.) that have an equilibrium vapor-phase concentration of methane of 0.5 volume percent or greater, and the type of vessels in which the material is loaded.

(3) The type of control system used to reduce emissions from the loading of material with an equilibrium vapor-phase concentration of methane of 0.5 volume percent or greater, if any (submerged loading, vapor balancing, etc.).

(q) Name of each method listed in § 98.254 or a description of manufacturer's recommended method used to determine a measured parameter.

§ 98.257 Records that must be retained.

In addition to the records required by § 98.3(g), you must retain the records of all parameters monitored under § 98.255.

§ 98.258 Definitions.

All terms used in this subpart have the same meaning given in the Clean Air Act and subpart A of this part.

Subpart Z—Phosphoric Acid Production

§ 98.260 Definition of the source category.

The phosphoric acid production source category consists of facilities with a wet-process phosphoric acid process line used to produce phosphoric acid. A wet-process phosphoric acid process line is the production unit or units identified by an individual identification number in an operating permit and/or any process unit or group of process units at a facility reacting phosphate rock from a common supply source with acid.

§ 98.261 Reporting threshold.

You must report GHG emissions under this subpart if your facility contains a phosphoric acid production process and the facility meets the requirements of either § 98.2(a)(1) or (a)(2).

§ 98.262 GHGs to report.

(a) You must report CO_2 process emissions from each wet-process phosphoric acid process line.

(b) You must report under subpart C of this part (General Stationary Fuel

Combustion Sources) the emissions of CO_2, CH_4, and N_2O from each stationary combustion unit following the requirements of subpart C of this part.

§ 98.263 Calculating GHG emissions.

You must calculate and report the annual process CO_2 emissions from each wet-process phosphoric acid process line using the procedures in either paragraph (a) or (b) of this section.

(a) Calculate and report under this subpart the process CO_2 emissions by operating and maintaining a CEMS according to the Tier 4 Calculation Methodology specified in § 98.33(a)(4) and all associated requirements for Tier 4 in subpart C of this part (General Stationary Fuel Combustion Sources).

(b) Calculate and report under this subpart the process CO_2 emissions using the procedures in paragraphs (b)(1) and (b)(2) of this section.

(1) Calculate and report the process CO_2 emissions from each wet-process phosphoric acid process line using Equation Z–1 of this section:

$$E_m = \sum_{i=1}^{b} \sum_{n=1}^{z} \left(IC_{n,i} * P_{n,i} \right) * \frac{2000}{2205} * \frac{44}{12} \qquad \text{(Eq. Z-1)}$$

Where:

E_m = Annual CO_2 mass emissions from a wet-process phosphoric acid process line m (metric tons).

$IC_{n,i}$ = Inorganic carbon content of a grab sample batch of phosphate rock by origin i obtained during month n, from the carbon analysis results (percent by weight, expressed as a decimal fraction).

$P_{n,i}$ = Mass of phosphate rock by origin i consumed in month n by wet-process phosphoric acid process line m (tons).

z = Number of months during which the process line m operates.

b = Number of different types of phosphate rock in month, by origin. If the grab sample is a composite sample of rock from more than one origin, b=1.

2000/2205 = Conversion factor to convert tons to metric tons.

44/12 = Ratio of molecular weights, CO_2 to carbon.

(2) You must determine the total emissions from the facility using Equation Z–2 of this section:

$$CO_2 = \sum_{m=1}^{p} E_m \qquad \text{(Eq. Z-2)}$$

Where:

CO_2 = Annual process CO_2 emissions from phosphoric acid production facility (metric tons/year).

E_m = Annual process CO_2 emissions from wet-process phosphoric acid process line m (metric tons/year).

p = Number of wet-process phosphoric acid process lines.

(c) If GHG emissions from a wet-process phosphoric acid process line are vented through the same stack as any combustion unit or process equipment that reports CO_2 emissions using a CEMS that complies with the Tier 4 Calculation Methodology in subpart C of this part (General Stationary Fuel Combustion Sources), then the calculation methodology in paragraph (b) of this section shall not be used to calculate process emissions. The owner or operator shall report under this subpart the combined stack emissions according to the Tier 4 Calculation Methodology in § 98.33(a)(4) and all associated requirements for Tier 4 in subpart C of this part.

§ 98.264 Monitoring and QA/QC requirements.

(a) You must obtain a monthly grab sample of phosphate rock directly from the rock being fed to the process line. Conduct the representative bulk sampling using the applicable standard method in the Phosphate Mining States Methods Used and Adopted by the Association of Fertilizer and Phosphate Chemists AFPC Manual 10th Edition 2009—Version 1.9 (incorporated by reference, see § 98.7). If phosphate rock is obtained from more than one origin in a month, you must obtain a sample from each origin of rock or obtain a composite representative sample.

(b) You must determine the inorganic carbon content of each monthly grab sample of phosphate rock (consumed in the production of phosphoric acid) using the applicable standard method in the Phosphate Mining States Methods Used and Adopted by the Association of Fertilizer and Phosphate Chemists AFPC Manual 10th Edition 2009—Version 1.9 (incorporated by reference, *see* § 98.7).

(c) You must determine the mass of phosphate rock consumed each month (by origin) in each wet-process phosphoric acid process line. You can use existing plant procedures that are used for accounting purposes (such as sales records) or you can use data from existing monitoring equipment that is used to measure total mass flow of phosphorous-bearing feed under 40 CFR part 60 or part 63.

§ 98.265 Procedures for estimating missing data.

A complete record of all measured parameters used in the GHG emissions calculations in § 98.263(b) is required. Therefore, whenever a quality-assured value of a required parameter is unavailable, a substitute data value for the missing parameter shall be used in the calculations as specified in paragraphs (a) and (b) of this section. You must document and keep records of the procedures used for all such estimates.

(a) For each missing value of the inorganic carbon content of phosphate rock (by origin), you must use the appropriate default factor provided in Table Z–1 of this subpart. Alternatively, the you must determine substitute data value by calculating the arithmetic average of the quality-assured values of inorganic carbon contents of phosphate rock of origin i (*see* Equation Z–1 of this subpart) from samples immediately preceding and immediately following the missing data incident. If no quality-assured data on inorganic carbon contents of phosphate rock of origin i are available prior to the missing data incident, the substitute data value shall be the first quality-assured value for inorganic carbon contents for phosphate rock of origin i obtained after the missing data period.

(b) For each missing value of monthly mass consumption of phosphate rock (by origin), you must use the best available estimate based on all available process data or data used for accounting purposes.

§ 98.266 Data reporting requirements.

In addition to the information required by § 98.3(c), each annual report must contain the information specified in paragraphs (a) through (b) of this section.

(a) Annual phosphoric acid production by origin (as listed in Table Z–1 to this subpart) of the phosphate rock (tons).

(b) Annual phosphoric acid permitted production capacity (tons).

(c) Annual arithmetic average percent inorganic carbon in phosphate rock from monthly records.

(d) Annual phosphate rock consumption from monthly measurement records by origin, (as listed in Table Z–1 to this subpart) (tons).

(e) If you use a CEMS to measure CO_2 emissions, then you must report the information in paragraphs (e)(1) and (e)(2) of this section.

(1) The identification number of each wet-process phosphoric acid process line.

(2) The annual CO_2 emissions from each wet-process phosphoric acid process line (metric tons) and the relevant information required under 40 CFR 98.36 (e)(2)(vi) for the Tier 4 Calculation Methodology.

(f) If you do not use a CEMS to measure emissions, then you must report the information in paragraphs (f)(1) through (f)(8) of this section.

(1) Identification number of each wet-process phosphoric acid process line.

(2) Annual CO_2 emissions from each wet-process phosphoric acid process line (metric tons) as calculated by Equation Z–1 of this subpart.

(3) Annual phosphoric acid permitted production capacity (tons) for each wet-process phosphoric acid process line (metric tons).

(4) Method used to estimate any missing values of inorganic carbon content of phosphate rock for each wet-process phosphoric acid process line.

(5) Monthly inorganic carbon content of phosphate rock for each wet-process phosphoric acid process line (percent by weight, expressed as a decimal fraction).

(6) Monthly mass of phosphate rock consumed by origin, (as listed in Table Z–1 of this subpart) in production for each wet-process phosphoric acid process line (tons).

(7) Number of wet-process phosphoric acid process lines.

(8) Number of times missing data procedures were used to estimate phosphate rock consumption (months) and inorganic carbon contents of the phosphate rock (months).

§ 98.267 Records that must be retained.

In addition to the records required by § 98.3(g), you must retain the records specified in paragraphs (a) through (c) of this section for each wet-process phosphoric acid production facility.

(a) Monthly mass of phosphate rock consumed by origin (as listed in Table Z–1 of this subpart) (tons).

(b) Records of all phosphate rock purchases and/or deliveries (if vertically integrated with a mine).

(c) Documentation of the procedures used to ensure the accuracy of monthly phosphate rock consumption by origin, (as listed in Table Z–1 of this subpart).

§ 98.268 Definitions.

All terms used in this subpart have the same meaning given in the Clean Air Act and subpart A of this part.

TABLE Z–1 TO SUBPART Z OF PART 98—DEFAULT CHEMICAL COMPOSITION OF PHOSPHATE ROCK BY ORIGIN

Origin	Total carbon (percent by weight)
Central Florida	1.6
North Florida	1.76
North Carolina (Calcined)	0.76
Idaho (Calcined)	0.60
Morocco	1.56

Subpart AA—Pulp and Paper Manufacturing

§ 98.270 Definition of source category.

(a) The pulp and paper manufacturing source category consists of facilities that produce market pulp (i.e., stand-alone pulp facilities), manufacture pulp and paper (i.e., integrated facilities), produce paper products from purchased pulp, produce secondary fiber from recycled paper, convert paper into paperboard products (e.g., containers), or operate coating and laminating processes.

(b) The emission units for which GHG emissions must be reported are listed in paragraphs (b)(1) through (b)(5) of this section:

(1) Chemical recovery furnaces at kraft and soda mills (including recovery furnaces that burn spent pulping liquor produced by both the kraft and semichemical process).

(2) Chemical recovery combustion units at sulfite facilities.

(3) Chemical recovery combustion units at stand-alone semichemical facilities.

(4) Pulp mill lime kilns at kraft and soda facilities.

(5) Systems for adding makeup chemicals ($CaCO_3$, Na_2CO_3) in the chemical recovery areas of chemical pulp mills.

§ 98.271 Reporting threshold.

You must report GHG emissions under this subpart if your facility contains a pulp and paper manufacturing process and the facility meets the requirements of either § 98.2(a)(1) or (a)(2).

§ 98.272 GHGs to report.

You must report the emissions listed in paragraphs (a) through (f) of this section:

(a) CO_2, biogenic CO_2, CH_4, and N_2O emissions from each kraft or soda chemical recovery furnace.

(b) CO_2, biogenic CO_2, CH_4, and N_2O emissions from each sulfite chemical recovery combustion unit.

(c) CO_2, biogenic CO_2, CH_4, and N_2O emissions from each stand-alone

semichemical chemical recovery combustion unit.

(d) CO_2, biogenic CO_2, CH_4, and N_2O emissions from each kraft or soda pulp mill lime kiln.

(e) CO_2 emissions from addition of makeup chemicals ($CaCO_3$, Na_2CO_3) in the chemical recovery areas of chemical pulp mills.

(f) CO_2, CH_4, and N_2O combustion emissions from each stationary combustion unit. You must calculate and report these emissions under subpart C of this part (General Stationary Fuel Combustion Sources) by following the requirements of subpart C.

§ 98.273 Calculating GHG emissions.

(a) For each chemical recovery furnace located at a kraft or soda facility, you must determine CO_2, biogenic CO_2, CH_4, and N_2O emissions using the procedures in paragraphs (a)(1) through (a)(3) of this section. CH_4 and N_2O emissions must be calculated as the sum of emissions from combustion of fossil fuels and combustion of biomass in spent liquor solids.

(1) Calculate fossil fuel-based CO_2 emissions from direct measurement of fossil fuels consumed and default emissions factors according to the Tier 1 methodology for stationary combustion sources in § 98.33(a)(1).

(2) Calculate fossil fuel-based CH_4 and N_2O emissions from direct measurement of fossil fuels consumed, default HHV, and default emissions factors and convert to metric tons of CO_2 equivalent according to the methodology for stationary combustion sources in § 98.33(c).

(3) Calculate biogenic CO_2 emissions and emissions of CH_4 and N_2O from biomass using measured quantities of spent liquor solids fired, site-specific HHV, and default or site-specific emissions factors, according to Equation AA–1 of this section:

$$CO_2, CH_4, or\ N_2O\ from\ biomass = (0.907.18) * Solids * HHV * EF \qquad \text{(Eq. AA-1)}$$

Where:

CO_2, CH_4, or N_2O, from Biomass = Biogenic CO_2 emissions or emissions of CH_4 or N_2O from spent liquor solids combustion (metric tons per year).

Solids = Mass of spent liquor solids combusted (short tons per year) determined according to § 98.274(b).

HHV = Annual high heat value of the spent liquor solids (mmBtu per kilogram) determined according to § 98.274(b).

EF = Default emission factor for CO_2, CH_4, or N_2O, from Table AA–1 of this subpart (kg CO_2, CH_4, or N_2O per mmBtu).

0.90718 = Conversion factor from short tons to metric tons.

(b) For each chemical recovery combustion unit located at a sulfite or stand-alone semichemical facility, you must determine CO_2, CH_4, and N_2O emissions using the procedures in paragraphs (b)(1) through (b)(4) of this section:

(1) Calculate fossil CO_2 emissions from fossil fuels from direct measurement of fossil fuels consumed and default emissions factors according to the Tier 1 Calculation Methodology for stationary combustion sources in § 98.33(a)(1).

(2) Calculate CH_4 and N_2O emissions from fossil fuels from direct measurement of fossil fuels consumed, default HHV, and default emissions factors and convert to metric tons of CO_2 equivalent according to the methodology for stationary combustion sources in § 98.33(c).

(3) Calculate biogenic CO_2 emissions using measured quantities of spent liquor solids fired and the carbon content of the spent liquor solids, according to Equation AA–2 of this section:

$$Biogenic\ CO_2 = \frac{44}{12} * \text{Solids} * \text{CC} * (0.90718) \qquad \text{(Eq. AA-2)}$$

Where:

Biogenic CO_2 = Annual CO_2 mass emissions for spent liquor solids combustion (metric tons per year).

Solids = Mass of the spent liquor solids combusted (short tons per year) determined according to § 98.274(b).

CC = Annual carbon content of the spent liquor solids, determined according to § 98.274(b) (percent by weight, expressed as a decimal fraction, e.g., 95% = 0.95).

44/12 = Ratio of molecular weights, CO_2 to carbon.

0.90718 = Conversion from short tons to metric tons.

(4) Calculate CH_4 and N_2O emissions from biomass using Equation AA–1 of this section and the default CH_4 and N_2O emissions factors for kraft facilities in Table AA–1 of this subpart and convert the CH_4 or N_2O emissions to metric tons of CO_2 equivalent by multiplying each annual CH_4 and N_2O emissions total by the appropriate global warming potential (GWP) factor from Table A–1 of subpart A of this part.

(c) For each pulp mill lime kiln located at a kraft or soda facility, you must determine CO_2, CH_4, and N_2O emissions using the procedures in paragraphs (c)(1) through (c)(3) of this section:

(1) Calculate CO_2 emissions from fossil fuel from direct measurement of fossil fuels consumed and default HHV and default emissions factors, according to the Tier 1 Calculation Methodology for stationary combustion sources in § 98.33(a)(1); use the default HHV listed in Table C–1 of subpart C and the default CO_2 emissions factors listed in Table AA–2 of this subpart.

(2) Calculate CH_4 and N_2O emissions from fossil fuel from direct measurement of fossil fuels consumed, default HHV, and default emissions factors and convert to metric tons of CO_2 equivalent according to the methodology for stationary combustion sources in § 98.33(c); use the default HHV listed in Table C–1 of subpart C and the default CH_4 and N_2O emissions factors listed in Table AA–2 of this subpart.

(3) Biogenic CO_2 emissions from conversion of $CaCO_3$ to CaO are included in the biogenic CO_2 estimates calculated for the chemical recovery furnace in paragraph (a)(3) of this section.

(d) For makeup chemical use, you must calculate CO_2 emissions by using direct or indirect measurement of the quantity of chemicals added and ratios of the molecular weights of CO_2 and the makeup chemicals, according to Equation AA–3 of this section:

$$CO_2 = \left[M_{(CaCO_3)} * \frac{44}{100} + M_{(Na_2CO_3)} \frac{44}{105.99} \right] * 1000 \; kg/metric\ ton \qquad \text{(Eq. AA-3)}$$

Where:

CO_2 = CO_2 mass emissions from makeup chemicals (kilograms/yr).

M ($CaCO_3$) = Make-up quantity of $CaCO_3$ used for the reporting year (metric tons per year).

M ($NaCO_3$) = Make-up quantity of Na_2CO_3 used for the reporting year (metric tons per year).

44 = Molecular weight of CO_2.

100 = Molecular weight of $CaCO_3$.

105.99 = Molecular weight of Na_2CO_3.

§ 98.274 Monitoring and QA/QC requirements.

(a) Each facility subject to this subpart must quality assure the GHG emissions data according to the applicable requirements in § 98.34. All QA/QC data must be available for inspection upon request.

(b) Fuel properties needed to perform the calculations in Equations AA–1 and AA–2 of this subpart must be determined according to paragraphs (b)(1) through (b)(3) of this section.

(1) High heat values of black liquor must be determined no less than annually using T684 om–06 Gross Heating Value of Black Liquor, TAPPI (incorporated by reference, *see* § 98.7). If measurements are performed more frequently than annually, then the high heat value used in Equation AA–1 of this subpart must be based on the average of the representative measurements made during the year.

(2) The annual mass of spent liquor solids must be determined using either of the methods specified in paragraph (b)(2)(i) or (b)(2)(ii) of this section.

(i) Measure the mass of spent liquor solids annually (or more frequently) using T–650 om–05 Solids Content of Black Liquor, TAPPI (incorporated by reference in § 98.7). If measurements are performed more frequently than annually, then the mass of spent liquor solids used in Equation AA–1 of this subpart must be based on the average of the representative measurements made during the year.

(ii) Determine the annual mass of spent liquor solids based on records of measurements made with an online measurement system that determines the mass of spent liquor solids fired in a chemical recovery furnace or chemical recovery combustion unit.

(3) Carbon analyses for spent pulping liquor must be determined no less than annually using ASTM D5373–08 Standard Test Methods for Instrumental Determination of Carbon, Hydrogen, and Nitrogen in Laboratory Samples of Coal (incorporated by reference, *see* § 98.7). If measurements using ASTM D5373–08 are performed more frequently than annually, then the spent pulping liquor carbon content used in Equation AA–2 of this subpart must be based on the average of the representative measurements made during the year.

(c) Each facility must keep records that include a detailed explanation of how company records of measurements are used to estimate GHG emissions. The owner or operator must also document the procedures used to ensure the accuracy of the measurements of fuel, spent liquor solids, and makeup chemical usage, including, but not limited to calibration of weighing equipment, fuel flow meters, and other measurement devices. The estimated accuracy of measurements made with these devices must be recorded and the technical basis for these estimates must be provided. The procedures used to convert spent pulping liquor flow rates to units of mass (i.e., spent liquor solids firing rates) also must be documented.

(d) Records must be made available upon request for verification of the calculations and measurements.

§ 98.275 Procedures for estimating missing data.

A complete record of all measured parameters used in the GHG emissions calculations is required. Therefore, whenever a quality-assured value of a required parameter is unavailable (e.g., if a meter malfunctions during unit operation or if a required sample is not taken), a substitute data value for the missing parameter shall be used in the calculations, according to the requirements of paragraphs (a) through (c) of this section:

(a) There are no missing data procedures for measurements of heat content and carbon content of spent pulping liquor. A re-test must be performed if the data from any annual measurements are determined to be invalid.

(b) For missing measurements of the mass of spent liquor solids or spent pulping liquor flow rates, use the lesser value of either the maximum mass or fuel flow rate for the combustion unit, or the maximum mass or flow rate that the fuel meter can measure.

(c) For the use of makeup chemicals (carbonates), the substitute data value shall be the best available estimate of makeup chemical consumption, based on available data (e.g., past accounting records, production rates). The owner or operator shall document and keep records of the procedures used for all such estimates.

§ 98.276 Data reporting requirements.

In addition to the information required by § 98.3(c), each annual report must contain the information in paragraphs (a) through (k) of this section as applicable:

(a) Annual emissions of CO_2, biogenic CO_2, CH_4, biogenic CH_4 N_2O, and biogenic N_2O (metric tons per year).

(b) Annual quantities fossil fuels by type used in chemical recovery furnaces and chemical recovery combustion units in short tons for solid fuels, gallons for liquid fuels and scf for gaseous fuels.

(c) Annual mass of the spent liquor solids combusted (short tons per year), and basis for determining the annual mass of the spent liquor solids combusted (whether based on T650 om-05 Solids Content of Black Liquor, TAPPI

(incorporated by reference, *see* § 98.7) or an online measurement system).

(d) The high heat value (HHV) of the spent liquor solids used in Equation AA–1 of this subpart (mmBtu per kilogram).

(e) The default emission factor for CO_2, CH_4, or N_2O, used in Equation AA–1 of this subpart (kg CO_2, CH_4, or N_2O per mmBtu).

(f) The carbon content (CC) of the spent liquor solids, used in Equation AA–2 of this subpart (percent by weight, expressed as a decimal fraction, e.g., 95% = 0.95).

(g) Annual quantities of fossil fuels by type used in pulp mill lime kilns in short tons for solid fuels, gallons for liquid fuels and scf for gaseous fuels.

(h) Make-up quantity of $CaCO_3$ used for the reporting year (metric tons per year) used in Equation AA–3 of this subpart.

(i) Make-up quantity of Na_2CO_3 used for the reporting year (metric tons per year) used in Equation AA–3 of this subpart.

(j) Annual steam purchases (pounds of steam per year).

(k) Annual production of pulp and/or paper products produced (metric tons).

§ 98.277 Records that must be retained.

In addition to the information required by § 98.3(g), you must retain the records in paragraphs (a) through (f) of this section.

(a) GHG emission estimates (including separate estimates of biogenic CO_2) for each emissions source listed under § 98.270(b).

(b) Annual analyses of spent pulping liquor HHV for each chemical recovery furnace at kraft and soda facilities.

(c) Annual analyses of spent pulping liquor carbon content for each chemical recovery combustion unit at a sulfite or semichemical pulp facility.

(d) Annual quantity of spent liquor solids combusted in each chemical recovery furnace and chemical recovery combustion unit, and the basis for detemining the annual quantity of the spent liquor solids combusted (whether based on T650 om–05 Solids Content of Black Liquor, TAPPI (incorporated by reference, *see* § 98.7) or an online measurement system). If an online measurement system is used, you must retain records of the calculations used to determine the annual quantity of spent liquor solids combusted from the continuous measurements.

(e) Annual steam purchases.

(f) Annual quantities of makeup chemicals used.

§ 98.278 Definitions.

All terms used in this subpart have the same meaning given in the Clean Air Act and subpart A of this part.

TABLE AA–1 TO SUBPART AA OF PART 98—KRAFT PULPING LIQUOR EMISSIONS FACTORS FOR BIOMASS-BASED CO_2, CH_4, AND N_2O

Wood furnish	Biomass-based emissions factors (kg/mmBtu HHV)		
	CO_2[a]	CH_4	N_2O
North American Softwood	94.4	0.030	0.005
North American Hardwood	93.7		
Bagasse	95.5		
Bamboo	93.7		
Straw	95.1		

[a] Includes emissions from both the recovery furnace and pulp mill lime kiln.

TABLE AA–2 TO SUBPART AA OF PART 98—KRAFT LIME KILN AND CALCINER EMISSIONS FACTORS FOR FOSSIL FUEL-BASED CO_2, CH_4, AND N_2O

Fuel	Fossil fuel-based emissions factors (kg/mmBtu HHV)					
	Kraft lime kilns			Kraft calciners		
	CO_2	CH_4	N_2O	CO_2	CH_4	N_2O
Residual Oil	76.7	0.0027	0	76.7	0.0027	0.0003
Distillate Oil	73.5			73.5		0.0004

TABLE AA–2 TO SUBPART AA OF PART 98—KRAFT LIME KILN AND CALCINER EMISSIONS FACTORS FOR FOSSIL FUEL-BASED CO_2, CH_4, AND N_2O—Continued

Fuel	Fossil fuel-based emissions factors (kg/mmBtu HHV)					
	Kraft lime kilns			Kraft calciners		
	CO_2	CH_4	N_2O	CO_2	CH_4	N_2O
Natural Gas	56.0			56.0		0.0001
Biogas	0					0.0001

Subpart BB—Silicon Carbide Production

§ 98.280 Definition of the source category.

Silicon carbide production includes any process that produces silicon carbide for abrasive purposes.

§ 98.281 Reporting threshold.

You must report GHG emissions under this subpart if your facility contains a silicon carbide production process and the facility meets the requirements of either § 98.2(a)(1) or (a)(2).

§ 98.282 GHGs to report.

You must report:

(a) CO_2 and CH_4 process emissions from all silicon carbide process units or furnaces combined.

(b) CO_2, CH_4, and N_2O emissions from each stationary combustion unit. You must report these emissions under subpart C of this part (General Stationary Fuel Combustion Sources) by following the requirements of subpart C.

§ 98.283 Calculating GHG emissions.

You must calculate and report the annual process CO_2 emissions from each silicon carbide process unit or production furnace using the procedures in either paragraph (a) or (b) of this section. You must determine CH_4 process emissions in accordance with the procedures specified in paragraph (d) of this section.

(a) Calculate and report under this subpart the process CO_2 emissions by operating and maintaining CEMS according to the Tier 4 Calculation Methodology specified in § 98.33(a)(4) and all associated requirements for Tier 4 in subpart C of this part (General Stationary Fuel Combustion Sources).

(b) Calculate and report under this subpart the process CO_2 emissions using the procedures in paragraphs (b)(1) and (b)(2) of this section.

(1) Use Equation BB–1 of this section to calculate the facility-specific emissions factor for determining CO_2 emissions. The carbon content must be measured monthly and used to calculate a monthly CO_2 emisssions factor:

$$EF_{CO2,n} = 0.65 * CCF_n * \left(\frac{44}{12}\right) \qquad \text{(Eq. BB-1)}$$

Where:

$EF_{CO2,n}$ = CO_2 emissions factor in month n (metric tons CO_2/metric ton of petroleum coke consumed).

0.65 = Adjustment factor for the amount of carbon in silicon carbide product (assuming 35 percent of carbon input is in the carbide product).

CCF_n = Carbon content factor for petroleum coke consumed in month n from the supplier or as measured by the applicable method incorporated by reference in § 98.7 according to § 98.284(c) (percent by weight expressed as a decimal fraction).

44/12 = Ratio of molecular weights, CO_2 to carbon.

(2) Use Equation BB–2 of this section to calculate annual CO_2 process emissions from all silicone carbide production:

$$CO_2 = \sum_{n=1}^{12} \left[T_n * EF_{CO2,n} \right] * \frac{2000}{2205} \qquad \text{(Eq. BB-2)}$$

Where:

CO_2 = Annual CO_2 emissions from silicon carbide production facility (metric tons CO_2).

T_n = Petroleum coke consumption in month n (tons).

$EF_{CO2,n}$ = CO_2 emissions factor from month n (calculated in Equation BB–1 of this section).

2000/2205 = Conversion factor to convert tons to metric tons.

n = Number of month.

(c) If GHG emissions from a silicon carbide production furnace or process unit are vented through the same stack as any combustion unit or process equipment that reports CO_2 emissions using a CEMS that complies with the Tier 4 Calculation Methodology in subpart C of this part (General Stationary Fuel Combustion Sources), then the calculation methodology in paragraph (b) of this section shall not be used to calculate process emissions. The owner or operator shall report under this subpart the combined stack emissions according to the Tier 4 Calculation Methodology in § 98.33(a)(4) and all associated requirements for Tier 4 in subpart C of this part.

(d) You must calculate annual process CH_4 emissions from all silicon carbide production combined using Equation BB–3 of this section:

$$CH_4 = \sum_{n=1}^{12} \left[T_n * 10.2 \right] * \frac{2000}{2205} * 0.001 \qquad \text{(Eq. BB-3)}$$

Where:

CH_4 = Annual CH_4 emissions from silicon carbide production facility (metric tons CH_4).

T_n = Petroleum coke consumption in month n (tons).

10.2 = CH_4 emissions factor (kg CH_4/metric ton coke).

2000/2205 = Conversion factor to convert tons to metric tons.

0.001 = Conversion factor from kilograms to metric tons.

n = Number of month.

§ 98.284 Monitoring and QA/QC requirements.

(a) You must measure your consumption of petroleum coke using plant instruments used for accounting purposes including direct measurement weighing the petroleum coke fed into your process (by belt scales or a similar device) or through the use of purchase records.

(b) You must document the procedures used to ensure the accuracy of monthly petroleum coke consumption measurements.

(c) For CO_2 process emissions, you must determine the monthly carbon content of the petroleum coke using reports from the supplier. Alternatively, facilities can measure monthly carbon contents of the petroleum coke using ASTM D3176–89 (Reapproved 2002) Standard Practice for Ultimate Analysis of Coal and Coke (incorporated by reference, *see* § 98.7) and ASTM D5373–08 Standard Test Methods for Instrumental Determination of Carbon, Hydrogen, and Nitrogen in Laboratory Samples of Coal (incorporated by reference, *see* § 98.7).

(d) For quality assurance and quality control of the supplier data, you must conduct an annual measurement of the carbon content of the petroleum coke using ASTM D3176–89 and ASTM D5373–08 Standard Test Methods for Instrumental Determination of Carbon, Hydrogen, and Nitrogen in Laboratory Samples of Coal (incorporated by reference, *see* § 98.7).

§ 98.285 Procedures for estimating missing data.

For the petroleum coke input procedure in § 98.283(b), a complete record of

all measured parameters used in the GHG emissions calculations is required (e.g., carbon content values, etc.). Therefore, whenever a quality-assured value of a required parameter is unavailable, a substitute data value for the missing parameter shall be used in the calculations as specified in the paragraphs (a) and (b) of this section. You must document and keep records of the procedures used for all such estimates.

(a) For each missing value of the monthly carbon content of petroleum coke, the substitute data value shall be the arithmetic average of the quality-assured values of carbon contents immediately preceding and immediately following the missing data incident. If no quality-assured data on carbon contents are available prior to the missing data incident, the substitute data value shall be the first quality-assured value for carbon contents obtained after the missing data period.

(b) For each missing value of the monthly petroleum coke consumption, the substitute data value shall be the best available estimate of the petroleum coke consumption based on all available process data or information used for accounting purposes (such as purchase records).

§ 98.286 Data reporting requirements.

In addition to the information required by § 98.3(c), each annual report must contain the information specified in paragraphs (a) or (b) of this section, as applicable for each silicon carbide production facility.

(a) If a CEMS is used to measure process CO_2 emissions, you must report under this subpart the relevant information required for the Tier 4 Calculation Methodology in § 98.36 and the information listed in this paragraph (a):

(1) Annual consumption of petroleum coke (tons).

(2) Annual production of silicon carbide (tons).

(3) Annual production capacity of silicon carbide (tons).

(b) If a CEMS is not used to measure process CO_2 emissions, you must report the information listed in this paragraph (b) for all furnaces combined:

(1) Monthly consumption of petroleum coke (tons).

(2) *Annual production of* silicon carbide (tons).

(3) Annual production capacity of silicon carbide (tons).

(4) Carbon content factor of petroleum coke from the supplier or as measured by the applicable method in § 98.284(c) for each month (percent by weight expressed as a decimal fraction).

(5) Whether carbon content of the petroleum coke is based on reports from the supplier or through self measurement using applicable ASTM standard method.

(6) CO_2 emissions factor calculated for each month (metric tons CO_2/metric ton of petroleum coke consumed).

(7) Sampling analysis results for carbon content of consumed petroleum coke as determined for QA/QC of supplier data under § 98.284(d) (percent by weight expressed as a decimal fraction).

(8) Number of times in the reporting year that missing data procedures were followed to measure the carbon contents of petroleum coke (number of months) and petroleum coke consumption (number of months).

§ 98.287 Records that must be retained.

In addition to the records required by § 98.3(g), you must retain the records specified in paragraphs (a) and (b) of this section for each silicon carbide production facility.

(a) If a CEMS is used to measure CO_2 emissions, you must retain under this subpart the records required for the Tier 4 Calculation Methodology in § 98.37 and the information listed in this paragraph (a):

(1) Records of all petroleum coke purchases.

(2) Annual operating hours.

(b) If a CEMS is not used to measure emissions, you must retain records for the information listed in this paragraph (b):

(1) Records of all analyses and calculations conducted for reported data listed in § 98.286(b).

(2) Records of all petroleum coke purchases.

(3) Annual operating hours.

§ 98.288 Definitions.

All terms used in this subpart have the same meaning given in the Clean Air Act and subpart A of this part.

Subpart CC—Soda Ash Manufacturing

§ 98.290 Definition of the source category.

(a) A soda ash manufacturing facility is any facility with a manufacturing line that produces soda ash by one of the methods in paragraphs (a)(1) through (3) of this section:

(1) Calcining trona.

(2) Calcining sodium sesquicarbonate.

(3) Using a liquid alkaline feedstock process that directly produces CO_2.

(b) In the context of the soda ash manufacturing sector, ''calcining'' means the thermal/chemical conversion of the bicarbonate fraction of the feedstock to sodium carbonate.

§ 98.291 Reporting threshold.

You must report GHG emissions under this subpart if your facility contains a soda ash manufacturing process and the facility meets the requirements of either § 98.2(a)(1) or (a)(2).

§ 98.292 GHGs to report.

You must report:

(a) CO_2 process emissions from each soda ash manufacturing line combined.

(b) CO_2 combustion emissions from each soda ash manufacturing line.

(c) CH_4 and N_2O combustion emissions from each soda ash manufacturing line. You must calculate and report these emissions under subpart C of this part (General Stationary Fuel Combustion Sources) by following the requirements of subpart C.

(d) CO_2, CH_4, and N_2O emissions from each stationary combustion unit other than soda ash manufacturing lines. You must calculate and report these emissions under subpart C of this part (General Stationary Fuel Combustion Sources) by following the requirements of subpart C.

§ 98.293 Calculating GHG emissions.

You must calculate and report the annual process CO_2 emissions from each soda ash manufacturing line using the procedures specified in paragraph (a) or (b) of this section.

(a) For each soda ash manufacturing line that meets the conditions specified in § 98.33(b)(4)(ii) or (b)(4)(iii), you must calculate and report under this subpart the combined process and combustion CO_2 emissions by operating and maintaining a CEMS to measure CO_2 emissions according to the Tier 4 Calculation Methodology specified in § 98.33(a)(4) and all associated requirements for Tier 4 in subpart C of this part (General Stationary Fuel Combustion Sources).

(b) For each soda ash manufacturing line that is not subject to the requirements in paragraph (a) of this section, calculate and report the process CO_2 emissions from the soda ash manufacturing line by using the procedure in either paragraphs (b)(1), (b)(2), or (b)(3) of this section; and the combustion CO_2 emissions using the procedure in paragraph (b)(4) of this section.

(1) Calculate and report under this subpart the combined process and combustion CO_2 emissions by operating and maintaining a CEMS to measure CO_2 emissions according to the Tier 4 Calculation Methodology specified in § 98.33(a)(4) and all associated requirements for Tier 4 in subpart C of this part (General Stationary Fuel Combustion Sources).

(2) Use either Equation CC–1 or Equation CC–2 of this section to calculate annual CO_2 process emissions from each manufacturing line that calcines trona to produce soda ash:

$$E_k = \sum_{n=1}^{12} \left[(IC_T)_n * (T_t)_n \right] * \frac{2000}{2205} * \frac{0.097}{1} \qquad \text{(Eq. CC-1)}$$

$$E_k = \sum_{n=1}^{12} \left[(IC_{sa})_n * (T_{sa})_n \right] * \frac{2000}{2205} * \frac{0.138}{1} \qquad \text{(Eq. CC-2)}$$

Where:

E_k = Annual CO_2 process emissions from each manufacturing line, k (metric tons).

$(IC_T)_n$ = Inorganic carbon content (percent by weight, expressed as a decimal fraction) in trona input, from the carbon analysis results for month n. This represents the ratio of trona to trona ore.

$(IC_{sa})_n$ = Inorganic carbon content (percent by weight, expressed as a decimal fraction) in soda ash output, from the carbon analysis results for month n. This represents the purity of the soda ash produced.

$(T_t)_n$ = Mass of trona input in month n (tons).

$(T_{sa})_n$ = Mass of soda ash output in month n (tons).

2000/2205 = Conversion factor to convert tons to metric tons.

0.097/1 = Ratio of ton of CO_2 emitted for each ton of trona.

0.138/1 = Ratio of ton of CO_2 emitted for each ton of soda ash produced.

(3) *Site-specific emission factor method.* Use Equations CC–3, CC–4, and CC–5 of this section to determine annual CO_2 process emissions from manufacturing lines that use the liquid alkaline feedstock process to produce soda ash. You must conduct an annual performance test and measure CO_2 emissions and flow rates at all process vents from the mine water stripper/evaporator for each manufacturing line and calculate CO_2 emissions as described in paragraphs (b)(3)(i) through (b)(3)(iv) of this section.

(i) During the performance test, you must measure the process vent flow from each process vent during the test and calculate the average rate for the test period in metric tons per hour.

(ii) Using the test data, you must calculate the hourly CO_2 emission rate using Equation CC–3 of this section:

$$ER_{CO2} = \left[(C_{co2} * 10000) * 2.59x10^{-9} * 44 \right] * (Q * 60) * 4.53x10^{-4} \qquad \text{(Eq. CC-3)}$$

Where:

ER_{CO2} = CO_2 mass emission rate (metric tons/hour).

C_{CO2} = Hourly CO_2 concentration (percent CO_2) as determined by § 98.294(c).

10000 = Parts per million per percent

2.59×10^{-9} = Conversion factor (pounds-mole/dscf/ppm).

44 = Pounds per pound-mole of carbon dioxide.

Q = Stack gas volumetric flow rate per minute (dscfm).

60 = Minutes per hour

4.53×10^{-4} = Conversion factor (metric tons/pound)

(iii) Using the test data, you must calculate a CO_2 emission factor for the process using Equation CC–4 of this section:

$$EF_{CO2} = \frac{ER_{CO2}}{\left(V_t * 4.53x10^{-4} \right)} \qquad \text{(Eq. CC-4)}$$

Where:

EF_{CO2} = CO_2 emission factor (metric tons CO_2/metric ton of process vent flow from mine water stripper/evaporator).

ER_{CO2} = CO_2 mass emission rate (metric tons/hour).

V_t = Process vent flow rate from mine water stripper/evaporator during annual performance test (pounds/hour).

4.53×10^{-4} = Conversion factor (metric tons/pound)

(iv) You must calculate annual CO_2 process emissions from each manufacturing line using Equation CC–5 of this section:

$$E_k = EF_{CO2} * (V_a * 0.453) * H \qquad \text{(Eq. CC-5)}$$

Where:

E_k = Annual CO_2 process emissions for each manufacturing line, k (metric tons).

EF_{CO2} = CO_2 emission factor (metric tons CO_2/metric ton of process vent flow from mine water stripper/evaporator).

V_a = Annual process vent flow rate from mine water stripper/evaporator (thousand pounds/hour).

H = Annual operating hours for the each manufacturing line.

0.453 = Conversion factor (metric tons/thousand pounds).

(4) Calculate and report under subpart C of this part (General Stationary Fuel Combustion Sources) the combustion CO_2, CH_4, and N_2O emissions in the soda ash manufacturing line according to the applicable requirements in subpart C.

§ 98.294 Monitoring and QA/QC requirements.

Section 98.293 provides three different procedures for emission calculations. The appropriate paragraphs (a) through (c) of this section should be used for the procedure chosen.

(a) If you determine your emissions using § 98.293(b)(2) (Equation CC–1 of this subpart) you must:

(1) Determine the monthly inorganic carbon content of the trona from a weekly composite analysis for each soda ash manufacturing line, using a modified version of ASTM E359–00 (Reapproved 2005)e1, Standard Test Methods for Analysis of Soda Ash (Sodium Carbonate) (incorporated by reference, see § 98.7). ASTM E359–00(Reapproved 2005) e1 is designed to measure the total alkalinity in soda ash not in trona. The modified method of ASTM E359–00 adjusts the regular ASTM method to expresse the results in terms of trona. Although ASTM E359–00 (Reapproved 2005) e1 uses manual titration, suitable autotitrators may also be used for this determination.

(2) Measure the mass of trona input produced by each soda ash manufacturing line on a monthly basis using belt scales or methods used for accounting purposes.

(3) Document the procedures used to ensure the accuracy of the monthly measurements of trona consumed.

(b) If you calculate CO_2 process emissions based on soda ash production (§ 98.293(b)(2) Equation CC–2 of this subpart), you must:

(1) Determine the inorganic carbon content of the soda ash (i.e., soda ash purity) using ASTM E359–00 (Reapproved 2005) e1 Standard Test Methods for Analysis of Soda Ash (Sodium Carbonate) (incorporated by reference, see § 98.7). Although ASTM E359–00 (Reapproved 2005) e1 uses manual titration, suitable autotitrators may also be used for this determination.

(2) Measure the mass of soda ash produced by each soda ash manufacturing line on a monthly basis using belt scales, by weighing the soda ash at the truck or rail loadout points of your facility, or methods used for accounting purposes.

(3) Document the procedures used to ensure the accuracy of the monthly measurements of soda ash produced.

(c) If you calculate CO_2 emissions using the site-specific emission factor method in § 98.293(b)(3), you must:

(1) Conduct an annual performance test that is based on representative performance (i.e., performance based on normal operating conditions) of the affected process.

(2) Sample the stack gas and conduct three emissions test runs of 1 hour each.

(3) Conduct the stack test using EPA Method 3A at 40 CFR part 60, appendix A–2 to measure the CO_2 concentration, Method 2, 2A, 2C, 2D, or 2F at 40 CFR part 60, appendix A–1 or Method 26 at 40 CFR part 60, appendix A–2 to determine the stack gas volumetric flow rate. All QA/QC procedures specified in the reference test methods and any associated performance specifications apply. For each test, the facility must prepare an emission factor determination report that must include the items in paragraphs (c)(3)(i) through (c)(3)(iii) of this section.

(i) Analysis of samples, determination of emissions, and raw data.

(ii) All information and data used to derive the emissions factor(s).

(iii) You must determine the average process vent flow rate from the mine water stripper/evaporater during each test and document how it was determined.

(4) You must also determine the annual vent flow rate from the mine water stripper/evaporater from monthly information using the same plant instruments or procedures used for accounting purposes (i.e., volumetric flow meter).

§ 98.295 Procedures for estimating missing data.

For the emission calculation methodologies in § 98.293(b)(2) and (b)(3), a complete record of all measured parameters used in the GHG emissions calculations is required (e.g., inorganic carbon content values, etc.). Therefore, whenever a quality-assured value of a required parameter is unavailable, a substitute data value for the missing parameter shall be used in the calculations as specified in the paragraphs (a) through (d) of this section. You must document and keep records of the procedures used for all such missing value estimates.

(a) For each missing value of the weekly composite of inorganic carbon content of either soda ash or trona, the substitute data value shall be the arithmetic average of the quality-assured values of inorganic carbon contents from the week immediately preceding and the week immediately following the missing data incident. If no quality-assured data on inorganic carbon contents are available prior to the missing data incident, the substitute data value shall be the first quality-assured value for carbon contents obtained after the missing data period.

(b) For each missing value of either the monthly soda ash production or the trona consumption, the substitute data value shall be the best available estimate(s) of the parameter(s), based on all available process data or data used for accounting purposes.

(c) For each missing value collected during the performance test (hourly CO_2 concentration, stack gas volumetric flow rate, or average process vent flow from mine water stripper/evaporator during performance test), you must repeat the annual performance test following the calculation and monitoring and QA/QC requirements under §§ 98.293(b)(3) and 98.294(c).

(d) For each missing value of the monthly process vent flow rate from mine water stripper/evaporator, the subsititute data value shall be the best available estimate(s) of the parameter(s), based on all available process data or the lesser of the maximum capacity of the system or the maximum rate the meter can measure.

§ 98.296 Data reporting requirements.

In addition to the information required by § 98.3(c), each annual report must contain the information specified in paragraphs (a) or (b) of this section, as appropriate for each soda ash manufacturing facility.

(a) If a CEMS is used to measure CO_2 emissions, then you must report under this subpart the relevant information required under § 98.36 and the following information in this paragraph (a):

(1) Annual consumption of trona or liquid alkaline feedstock for each manufacturing line (metric tons).

(2) Annual production of soda ash for each manufacturing line (tons).

(3) Annual production capacity of soda ash for each manufacturing line (tons).

(4) Identification number of each manufacturing line.

(b) If a CEMS is not used to measure CO_2 emissions, then you must report the information listed in this paragraph (b):

(1) Identification number of each manufacturing line.

(2) Annual process CO_2 emissions from each soda ash manufacturing line (metric tons).

(3) Annual production of soda ash (tons).

(4) Annual production capacity of soda ash for each manufacturing line (tons).

(5) Monthly consumption of trona or liquid alkaline feedstock for each manufacturing line (tons).

(6) Monthly production of soda ash for each manufacturing line (metric tons).

(7) Inorganic carbon content factor of trona or soda ash (depending on use of

Equations CC–1 or CC–2 of this subpart) as measured by the applicable method in § 98.294(b) or (c) for each month (percent by weight expressed as a decimal fraction).

(8) Whether CO_2 emissions for each manufacturing line were calculated using a trona input method as described in Equation CC–1 of this subpart, a soda ash output method as described in Equation CC–2 of this subpart, or a site-specific emission factor method as described in Equations CC–3 through CC–5 of this subpart.

(9) Number of manufacturing lines located used to produce soda ash.

(10) If you produce soda ash using the liquid alkaline feedstock process and use the site-specific emission factor method (§ 98.293(b)(3)) to estimate emissions then you must report the following relevant information:

(i) Stack gas volumetric flow rate per minute (dscfm)

(ii) Hourly CO_2 concentration (percent CO_2)

(iii) CO_2 emission factor (metric tons CO_2/metric tons of process vent flow from mine water stripper/evaporator).

(iv) CO_2 mass emission rate (metric tons/hour).

(v) Average process vent flow from mine water stripper/evaporater during performance test (pounds/hour).

(vi) Annual process vent flow rate from mine stripper/evaporator (thousand pounds/hour).

(vii) Annual operating hours for each manufacturing line used to produce soda ash using liquid alkaline feedstock (hours).

(11) Number of times missing data procedures were used and for which parameter as specified in this paragraph (b)(11):

(i) Trona or soda ash (number of months).

(ii) Inorganic carbon contents of trona or soda ash (weeks).

(iii) Process vent flow rate from mine water stripper/evaporator (number of months).

(iv) Stack gas volumetric flow rate during performance test (number of times).

(v) Hourly CO_2 concentration (number of times).

(vi) Average vent process vent flow rate from mine stripper/evaporator during performance test (number of times).

§ 98.297 Records that must be retained.

In addition to the records required by § 98.3(g), you must retain the records specified in paragraphs (a) and (b) of this section for each soda ash manufacturing line.

(a) If a CEMS is used to measure CO_2 emissions, then you must retain under this subpart the records required for the Tier 4 Calculation Methodology specified in subpart C of this part and the information listed in this paragraph (a):

(1) Monthly production of soda ash (tons)

(2) Monthly consumption of trona or liquid alkaline feedstock (tons)

(3) Annual operating hours (hours).

(b) If a CEMS is not used to measure emissions, then you must retain records for the information listed in this paragraph (b):

(1) Records of all analyses and calculations conducted for determining all reported data as listed in § 98.296(b).

(2) If using Equation CC–1 or CC–2 of this subpart, weekly inorganic carbon content factor of trona or soda ash, depending on method chosen, as measured by the applicable method in § 98.294(b) (percent by weight expressed as a decimal fraction).

(3) Annual operating hours for each manufacturing line used to produce soda ash (hours).

(4) You must document the procedures used to ensure the accuracy of the monthly trona consumption or soda ash production measurements including, but not limited to, calibration of weighing equipment and other measurement devices. The estimated accuracy of measurements made with these devices must also be recorded, and the technical basis for these estimates must be provided.

(5) If you produce soda ash using the liquid alkaline feedstock process and use the site-specific emission factor method to estimate emissions (§ 98.293(b)(3)) then you must also retain the following relevant information:

(i) Records of performance test results.

(ii) You must document the procedures used to ensure the accuracy of the annual average vent flow measurements including, but not limited to, calibration of flow rate meters and other measurement devices. The estimated accuracy of measurements made with these devices must also be recorded, and the technical basis for these estimates must be provided.

§ 98.298 Definitions.

All terms used in this subpart have the same meaning given in the Clean Air Act and subpart A of this part.

Subpart DD [Reserved]

Subpart EE—Titanium Dioxide Production

§ 98.310 Definition of the source category.

The titanium dioxide production source category consists of facilities that use the chloride process to produce titanium dioxide.

§ 98.311 Reporting threshold.

You must report GHG emissions under this subpart if your facility contains a titanium dioxide production process and the facility meets the requirements of either § 98.2(a)(1) or (a)(2).

§ 98.312 GHGs to report.

(a) You must report CO_2 process emissions from each chloride process line as required in this subpart.

(b) You must report CO_2, CH_4, and N_2O emissions from each stationary combustion unit under subpart C of this part (General Stationary Fuel Combustion Sources) by following the requirements of subpart C.

§ 98.313 Calculating GHG emissions.

You must calculate and report the annual process CO_2 emissions for each chloride process line using the procedures in either paragraph (a) or (b) of this section.

(a) Calculate and report under this subpart the process CO_2 emissions by operating and maintaining a CEMS according to the Tier 4 Calculation Methodology specified in § 98.33(a)(4) and all associated requirements for Tier 4 in subpart C of this part (General Stationary Fuel Combustion Sources).

(b) Calculate and report under this subpart the annual process CO_2 emissions for each chloride process line by determining the mass of calcined petroleum coke consumed in each line as specified in paragraphs (b)(1) through (b)(3) of this section. Use Equation EE–1 of this section to calulate annual combined process CO_2 emissions from all process lines and use Equation EE–2 of this section to calculate annual process CO_2 emissions for each process line. If your facility generates carbon-containing waste, use Equation EE–3 of this section to estimate the annual quantity of carbon-containing waste generated and its carbon contents according to § 98.314(e) and (f):

(1) You must calculate the annual CO_2 process emissions from all process lines at the facility using Equation EE–1 of this section:

$$CO_2 = \sum_{p=1}^{m} E_p \qquad \text{(Eq. EE-1)}$$

Where:

CO_2 = Annual CO_2 emissions from titanium dioxide production facility (metric tons/year).

E_p = Annual CO_2 emissions from chloride process line p (metric tons), determined using Equation EE–2 of this section.

p = Process line.

m = Number of separate chloride process lines located at the facility.

(2) You must calculate the annual CO_2 process emissions from each process lines at the facility using Equation EE–2 of this section:

$$E_p = \sum_{n=1}^{12} \frac{44}{12} * C_{p,n} * \frac{2000}{2205} * CCF_n \qquad \text{(Eq. EE-2)}$$

Where:

E_p = Annual CO_2 mass emissions from chloride process line p (metric tons).

$C_{p,n}$ = Calcined petroleum coke consumption for process line p in month n (tons).

44/12 = Ratio of molecular weights, CO_2 to carbon.

2000/2205 = Conversion of tons to metric tons.

CCF_n = Carbon content factor for petroleum coke consumed in month n from the supplier or as measured by the applicable method incorporated by reference in § 98.7 according to § 98.314(c) (percent by weight expressed as a decimal fraction).

n = Number of month.

(3) If facility generates carbon-containing waste, you must calculate the total annual quantity of carbon-containing waste produced from all process lines using Equation EE–3 of this section and its carbon contents according to § 98.314(e) and (f):

$$TWC = \sum_{p=1}^{m} \sum_{n=1}^{12} WC_{p,n} \qquad \text{(Eq. EE-3)}$$

Where:

TWC = Annual production of carbon-containing waste from titanium dioxide production facility (tons).

$WC_{p,n}$ = Production of carbon-containing waste in month n from chloride process line p (tons).

p = Process line.

m = Total number of process lines.

n = Number of month.

(c) If GHG emissions from a chloride process line are vented through the same stack as any combustion unit or process equipment that reports CO_2 emissions using a CEMS that complies with the Tier 4 Calculation Methodology in subpart C of this part (General Stationary Fuel Combustion Sources), then the calculation methodology in paragraph (b) of this section shall not be used to calculate process CO_2 emissions. The owner or operator shall report under this subpart the combined stack emissions according to the Tier 4 Calculation Methodology in § 98.33(a)(4) and all associated requirements for Tier 4 in subpart C of this part.

§ 98.314 Monitoring and QA/QC requirements.

(a) You must measure your consumption of calcined petroleum coke using plant instruments used for accounting purposes including direct measurement weighing the petroleum coke fed into your process (by belt scales or a similar device) or through the use of purchase records.

(b) You must document the procedures used to ensure the accuracy of monthly calcined petroleum coke consumption measurements.

(c) You must determine the carbon content of the calcined petroleum coke each month based on reports from the supplier. Alternatively, facilities can measure monthly carbon contents of the petroleum coke using ASTM D3176–89 (Reapproved 2002) Standard Practice for Ultimate Analysis of Coal and Coke (incorporated by reference, *see* § 98.7) and ASTM D5373–08 Standard Test Methods for Instrumental Determination of Carbon, Hydrogen, and Nitrogen in Laboratory Samples of Coal (incorporated by reference, *see* § 98.7).

(d) For quality assurance and quality control of the supplier data, you must conduct an annual measurement of the carbon content from a representative sample of the petroleum coke consumed using ASTM D3176–89 and ASTM D5373–08.

(e) You must determine the quantity of carbon-containing waste generated from the each titanium production line dioxide using plant instruments used for accounting purposes including direct measurement weighing the carbon-containing waste not used during the process (by belt scales or a similar device) or through the use of sales records.

(f) You must determine the carbon contents of the carbon-containing waste from each titanium production line on an annual basis by collecting and analyzing a representative sample of the material using ASTM D3176–89 and ASTM D5373–08.

§ 98.315 Procedures for estimating missing data.

For the petroleum coke input procedure in § 98.313(b), a complete record of all measured parameters used in the GHG emissions calculations is required (e.g., carbon content values, etc.). Therefore, whenever the monitoring and quality assurance procedures in § 98.315 cannot be followed, a substitute data value for the missing parameter shall be used in the calculations as

specified in the paragraphs (a) through (c) of this section. You must document and keep records of the procedures used for all such estimates.

(a) For each missing value of the monthly carbon content of calcined petroleum coke the substitute data value shall be the arithmetic average of the quality-assured values of carbon contents for the month immediately preceding and the month immediately following the missing data incident. If no quality-assured data on carbon contents are available prior to the missing data incident, the substitute data value shall be the first quality-assured value for carbon contents obtained after the missing data period.

(b) For each missing value of the monthly calcined petroleum coke consumption and/or carbon-containing waste, the substitute data value shall be the best available estimate of the monthly petroleum coke consumption based on all available process data or information used for accounting purposes (such as purchase records).

(c) For each missing value of the carbon content of carbon-containing waste, you must conduct a new analysis following the procedures in § 98.314(f).

§ 98.316 Data reporting requirements.

In addition to the information required by § 98.3(c), each annual report must contain the information specified in paragraphs (a) or (b) of this section, as applicable for each titanium dioxide production line.

(a) If a CEMS is used to measure CO_2 emissions, then you must report the relevant information required under § 98.36(e)(2)(vi) for the Tier 4 Calculation Methodology and the following information in this paragraph (a).

(1) Identification number of each process line.

(2) Annual consumption of calcined petroleum coke (tons).

(3) Annual production of titanium dioxide (tons).

(4) Annual production capacity of titanium dioxide (tons).

(5) Annual production of carbon-containing waste (tons), if applicable.

(b) If a CEMS is not used to measure CO_2 emissions, then you must report the information listed in this paragraph (b):

(1) Identification number of each process line.

(2) Annual CO_2 emissions from each chloride process line (metric tons/year).

(3) Annual consumption of calcined petroleum coke for each process line (tons).

(4) Annual production of titanium dioxide for each process line (tons).

(5) Annual production capacity of titanium dioxide for each process line (tons).

(6) Calcined petroleum coke consumption for each process line for each month (tons).

(7) Annual production of carbon-containing waste for each process line (tons), if applicable.

(8) Monthly production of titanium dioxide for each process line (tons).

(9) Monthly carbon content factor of petroleum coke from the supplier (percent by weight expressed as a decimal fraction).

(10) Whether monthly carbon content of the petroleum coke is based on reports from the supplier or through self measurement using applicable ASTM standard methods.

(11) Carbon content for carbon-containing waste (percent by weight expressed as a decimal fraction).

(12) If carbon content of petroleum coke is based on self measurement, the ASTM standard methods used.

(13) Sampling analysis results of carbon content of petroleum coke as determined for QA/QC of supplier data under § 98.314(d) (percent by weight expressed as a decimal fraction).

(14) Number of separate chloride process lines located at the facility.

(15) The number of times in the reporting year that missing data procedures were followed to measure the carbon contents of petroleum coke (number of months); petroleum coke consumption (number of months); carbon-containing waste generated (number of months); and carbon contents of the carbon-containing waste (number of times during year).

§ 98.317 Records that must be retained.

In addition to the records required by § 98.3(g), you must retain the records specified in paragraphs (a) and (b) of this section for each titanium dioxide production facility.

(a) If a CEMS is used to measure CO_2 emissions, then you must retain under this subpart required for the Tier 4 Calculation Methodology in § 98.37 and the information listed in this paragraph (a):

(1) Records of all calcined petroleum coke purchases.

(2) Annual operating hours for each titanium dioxide process line.

(b) If a CEMS is not used to measure CO_2 emissions, then you must retain records for the information listed in this paraghraph:

(1) Records of all calcined petroleum coke purchases (tons).

(2) Records of all analyses and calculations conducted for all reported data as listed in § 98.316(b).

(3) Sampling analysis results for carbon content of consumed calcined petroleum coke (percent by weight expressed as a decimal fraction).

(4) Sampling analysis results for the carbon content of carbon containing waste (percent by weight expressed as a decimal fraction), if applicable.

(5) Monthly production of carbon-containing waste (tons).

(6) You must document the procedures used to ensure the accuracy of the monthly petroleum coke consumption and quantity of carbon-containing waste measurement including, but not limited to, calibration of weighing equipment and other measurement devices. The estimated accuracy of measurements made with these devices must also be recorded, and the technical basis for these estimates must be provided.

(7) Annual operating hours for each titanium dioxide process line (hours).

§ 98.318 Definitions.

All terms used in this subpart have the same meaning given in the Clean Air Act and subpart A of this part.

Subpart FF [Reserved]

Subpart GG—Zinc Production

§ 98.330 Definition of the source category.

The zinc production source category consists of zinc smelters and secondary zinc recycling facilities.

§ 98.331 Reporting threshold.

You must report GHG emissions under this subpart if your facility contains a zinc production process and the facility meets the requirements of either § 98.2(a)(1) or (2).

§ 98.332 GHGs to report.

You must report:

(a) CO_2 process emissions from each Waelz kiln and electrothermic furnace used for zinc production.

(b) CO_2, CH_4, and N_2O combustion emissions from each Waelz kiln. You must calculate and report these emissions under subpart C of this part (General Stationary Fuel Combustion Sources) by following the requirements of subpart C.

(c) CO_2, CH_4, and N_2O emissions from each stationary combustion unit other than Waelz kilns. You must report these emissions under subpart C of this part (General Stationary Fuel Combustion Sources) by following the requirements of subpart C.

§ 98.333 Calculating GHG emissions.

You must calculate and report the annual process CO_2 emissions using the procedures specified in either paragraph (a) or (b) of this section.

(a) Calculate and report under this subpart the process or combined process and combustion CO_2 emissions by operating and maintaining a CEMS according to the Tier 4 Calculation Methodology in § 98.33(a)(4) and all associated requirements for Tier 4 in subpart C of this part (General Stationary Fuel Combustion Sources).

(b) Calculate and report under this subpart the process CO_2 emissions by following paragraphs (b)(1) and (b)(2) of this section.

(1) For each Waelz kiln or electrothermic furnace at your facility used for zinc production, you must determine the mass of carbon in each carbon-containing material, other than fuel, that is fed, charged, or otherwise

introduced into each Waelz kiln and electrothermic furnace at your facility for each year and calculate annual CO_2 process emissions from each affected unit at your facility using Equation GG–1 of this section. For electrothermic furnaces, carbon containing input materials include carbon eletrodes and carbonaceous reducing agents. For Waelz kilns, carbon containing input materials include carbonaceous reducing agents. If you document that a specific material contributes less than 1 percent of the total carbon into the process, you do not have to include the material in your calculation using Equation R–1 of § 98.183.

$$E_{CO2k} = \frac{44}{12} * \frac{2000}{2205} * \left[(Zinc)_k * (C_{Zinc})_k + (Flux)_k * (C_{Flux})_k + (Electrode)_k * (C_{Electrode})_k + (Carbon)_k * (C_{carbon})_k \right] \quad \text{(Eq. GG-1)}$$

Where:

E_{CO2k} = Annual CO_2 process emissions from individual Waelz kiln or electrothermic furnace ''k'' (metric tons).

44/12 = Ratio of molecular weights, CO_2 to carbon.

2000/2205 = Conversion factor to convert tons to metric tons.

$(Zinc)_k$ = Annual mass of zinc bearing material charged to kiln or furnace ''k'' (tons).

$(C_{Zinc})_k$ = Carbon content of the zinc bearing material, from the annual carbon analysis for kiln or furnace ''k'' (percent by weight, expressed as a decimal fraction).

$(Flux)_k$ = Annual mass of flux materials (e.g., limestone, dolomite) charged to kiln or furnace ''k'' (tons).

$(C_{Flux})_k$ = Carbon content of the flux materials charged to kiln or furnace ''k'', from the annual carbon analysis (percent by weight, expressed as a decimal fraction).

$(Electrode)_k$ = Annual mass of carbon electrode consumed in kiln or furnace ''k'' (tons).

$(C_{Electrode})_k$ = Carbon content of the carbon electrode consumed in kiln or furnace ''k'', from the annual carbon analysis (percent by weight, expressed as a decimal fraction).

$(Carbon)_k$ = Annual mass of carbonaceous materials (e.g., coal, coke) charged to the kiln or furnace ''k''(tons).

$(C_{Carbon})_k$ Carbon content of the carbonaceous materials charged to kiln or furnace, ''k'', from the annual carbon analysis (percent by weight, expressed as a decimal fraction).

(2) You must determine the CO_2 emissions from all of the Waelz kilns or electrothermic furnaces at your facility using Equation GG–2 of this section.

$$CO_2 = \sum_{k=1}^{n} E_{CO2_k} \quad \text{(Eq. GG-2)}$$

Where:

CO_2 = Annual combined CO_2 emissions from all Waelz kilns or electrothermic furnaces (tons).

E_{CO2_k} = Annual CO_2 emissions from each Waelz kiln or electrothermic furnace k calculated using Equation GG–1 of this section (tons).

n = Total number of Waelz kilns or electrothermic furnaces at facility used for the zinc production.

(c) If GHG emissions from a Waelz kiln or electrothermic furnace are vented through the same stack as any combustion unit or process equipment that reports CO_2 emissions using a CEMS that complies with the Tier 4 Calculation Methodology in subpart C of this part (General Stationary Fuel Combustion Sources), then the calculation methodology in paragraph (b) of this section shall not be used to calculate process emissions. The owner or operator shall report under this subpart the combined stack emissions according to the Tier 4 Calculation Methodology in § 98.33(a)(4) and all associated requirements for Tier 4 in subpart C of this part.

§ 98.334 Monitoring and QA/QC requirements.

If you determine CO_2 emissions using the carbon input procedure in § 98.333(b)(1) and (b)(2), you must meet the requirements specified in paragraphs (a) and (b) of this section.

(a) Determine the mass of each solid carbon-containing input material consumed using facility instruments, procedures, or records used for accounting purposes including direct measurement weighing or through the use of purchase records same plant instruments

or procedures that are used for accounting purposes (such as weigh hoppers, belt weigh feeders, weighed purchased quantities in shipments or containers, combination of bulk density and volume measurements, etc.). Record the total mass for the materials consumed each calendar month and sum the monthly mass to determine the annual mass for each input material.

(b) For each input material identified in paragraph (a) of this section, you must determine the average carbon content of the material consumed or used in the calendar year using the methods specified in either paragraph (b)(1) or (b)(2) of this section.

(1) Information provided by your material supplier.

(2) Collecting and analyzing at least three representative samples of the material using the appropriate testing method. For each carbon-containing input material identified for which the carbon content is not provided by your material supplier, the carbon content of the material must be analyzed at least annually using the appropriate standard methods (and their QA/QC procedures), which are identified in paragraphs (b)(2)(i) through (b)(2)(iii) of this section, as applicable. If you document that a specific process input or output contributes less than one percent of the total mass of carbon into or out of the process, you do not have to determine the monthly mass or annual carbon content of that input or output.

(i) Using ASTM E1941–04 Standard Test Method for Determination of Carbon in Refractory and Reactive Metals and Their Alloys (incorporated by reference, see § 98.7), analyze zinc bearing materials.

(ii) Using ASTM D5373–08 Standard Test Methods for Instrumental Determination of Carbon, Hydrogen, and Nitrogen in Laboratory Samples of Coal (incorporated by reference, see § 98.7), analyze carbonaceous reducing agents and carbon electrodes.

(iii) Using ASTM C25–06 Standard Test Methods for Chemical Analysis of Limestone, Quicklime, and Hydrated Lime (incorporated by reference, see § 98.7), analyze flux materials such as limestone or dolomite.

§ 98.335 Procedures for estimating missing data.

For the carbon input procedure in § 98.333(b), a complete record of all measured parameters used in the GHG emissions calculations is required (e.g., raw materials carbon content values, etc.). Therefore, whenever a quality-assured value of a required parameter is unavailable, a substitute data value for the missing parameter shall be used in the calculations as specified in paragraphs (a) and (b) of this section. You must document and keep records of the procedures used for all such estimates.

(a) For missing records of the carbon content of inputs for facilities that estimate emissions using the carbon input procedure in § 98.333(b); 100 percent data availability is required. You must repeat the test for average carbon contents of inputs according to the procedures in § 98.335(b) if data are missing.

(b) For missing records of the annual mass of carbon-containing inputs using the carbon input procedure in § 98.333(b), the substitute data value must be based on the best available estimate of the mass of the input material from all available process data or information used for accounting purposes, such as purchase records.

§ 98.336 Data reporting requirements.

In addition to the information required by § 98.3(c), each annual report must contain the information specified in paragraphs (a) or (b) of this section, as applicable, for each Waelz kiln or electrothermic furnace.

(a) If a CEMS is used to measure CO_2 emissions, then you must report under this subpart the relevant information required for the Tier 4 Calculation Methodology in § 98.37 and the information listed in this paragraph (a):

(1) Annual zinc product production capacity (tons).

(2) Annual production quantity for each zinc product (tons).

(3) Annual facility production quantity for each zinc product (tons).

(4) Number of Waelz kilns at each facility used for zinc production.

(5) Number of electrothermic furnaces at each facility used for zinc production.

(b) If a CEMS is not used to measure CO_2 emissions, then you must report the information listed in this paragraph (b):

(1) Kiln identification number and annual process CO_2 emissions from each individual Waelz kiln or electrothermic furnace (metric tons).

(2) Annual zinc product production capacity (tons).

(3) Annual production quantity for each zinc product (tons).

(4) Number of Waelz kilns at each facility used for zinc production.

(5) Number of electrothermic furnaces at each facility used for zinc production.

(6) Annual mass of each carbon-containing input material charged to each kiln or furnace (including zinc bearing material, flux materials (e.g., limestone, dolomite), carbon electrode, and other carbonaceous materials (e.g., coal, coke)) (tons).

(7) Carbon content of each carbon-containing input material charged to each kiln or furnace (including zinc bearing material, flux materials, and other carbonaceous materials) from the annual carbon analysis for each kiln or furnace (percent by weight, expressed as a decimal fraction).

(8) Whether carbon content of each carbon-containing input material charged to each kiln or furnace is based on reports from the supplier or through self measurement using applicable ASTM standard method.

(9) If carbon content of each carbon-containing input material charged to each kiln or furnace is based on self measurement, the ASTM Standard Test Method used.

(10) Carbon content of the carbon electrode used in each furnace from the annual carbon analysis (percent by weight, expressed as a decimal fraction).

(11) Whether carbon content of the carbon electrode used in each furnace is based on reports from the supplier or through self measurement using applicable ASTM standard method.

(12) If carbon content of carbon electrode used in each furnace is based on self measurement, the ASTM standard method used.

(13) If you use the missing data procedures in § 98.335(b), you must report how the monthly mass of carbon-containing materials with missing data was determined and the number of months the missing data procedures were used.

§ 98.337 Records that must be retained.

In addition to the records required by § 98.3(g), you must retain the records specified in paragraphs (a) through (b) of this section for each zinc production facility.

(a) If a CEMS is used to measure emissions, then you must retain under this subpart the records required for the Tier 4 Calculation Methodology in § 98.37 and the information listed in this paragraph (a):

(1) Monthly facility production quantity for each zinc product (tons).

(2) Annual operating hours for all Waelz kilns and electrothermic furnaces used in zinc production.

(b) If a CEMS is not used to measure emissions, you must also retain the records specified in paragraphs (b)(1) through (b)(7) of this section.

(1) Records of all analyses and calculations conducted for data reported as listed in § 98.336(b).

(2) Annual operating hours for Waelz kilns and electrothermic furnaces used in zinc production.

(3) Monthly production quantity for each zinc product (tons).

(4) Monthly mass of zinc bearing materials, flux materials (e.g., limestone, dolomite), and carbonaceous materials (e.g., coal, coke) charged to the kiln or furnace (tons).

(5) Sampling and analysis records for carbon content of zinc bearing materials, flux materials (e.g., limestone, dolomite), carbonaceous materials (e.g., coal, coke), charged to the kiln or furnace (percent by weight, expressed as a decimal fraction).

(6) Monthly mass of carbon electrode consumed in for each electrothermic furnace (tons).

(7) Sampling and analysis records for carbon content of electrode materials.

(8) You must keep records that include a detailed explanation of how company records of measurements are used to estimate the carbon input to

each Waelz kiln or electrothermic furnace, as applicable to your facility, including documentation of any materials excluded from Equation GG–1 of this subpart that contribute less than 1 percent of the total carbon inputs to the process. You also must document the procedures used to ensure the accuracy of the measurements of materials fed, charged, or placed in an affected unit including, but not limited to, calibration of weighing equipment and other measurement devices. The estimated accuracy of measurements made with these devices must also be recorded, and the technical basis for these estimates must be provided.

§ 98.338 Definitions.

All terms used in this subpart have the same meaning given in the Clean Air Act and subpart A of this part.

Subpart HH—Municipal Solid Waste Landfills

§ 98.340 Definition of the source category.

(a) This source category applies to municipal solid waste (MSW) landfills that accepted waste on or after January 1, 1980.

(b) This source category does not include hazardous waste landfills, construction and demolition landfills, or industrial landfills.

(c) This source category consists of the following sources at municipal solid waste (MSW) landfills: Landfills, landfill gas collection systems, and landfill gas destruction devices (including flares).

§ 98.341 Reporting threshold.

You must report GHG emissions under this subpart if your facility contains a MSW landfill and the facility meets the requirements of § 98.2(a)(1).

§ 98.342 GHGs to report.

(a) You must report CH_4 generation and CH_4 emissions from landfills.

(b) You must report CH_4 destruction resulting from landfill gas collection and combustion systems.

(c) You must report under subpart C of this part (General Stationary Fuel Combustion Sources) the emissions of CO_2, CH_4, and N_2O from each stationary combustion unit following the requirements of subpart C.

§ 98.343 Calculating GHG emissions.

(a) For all landfills subject to the reporting requirements of this subpart, calculate annual modeled CH_4 generation according to the applicable requirements in paragraphs (a)(1) through (a)(3) of this section.

(1) Calculate annual modeled CH_4 generation using Equation HH–1 of this section.

$$G_{CH4} = \left[\sum_{x=S}^{T-1} \left\{ W_x L_{0,x} \left(e^{-k(T-x-1)} - e^{-k(T-x)} \right) \right\} \right] \qquad \text{(Eq. HH-1)}$$

Where:

G_{CH4} = Modeled methane generation rate in reporting year T (metric tons CH_4).

X = Year in which waste was disposed.

S = Start year of calculation. Use the year 50 years prior to the year of the emissions estimate, or the opening year of the landfill, whichever is more recent.

T = Reporting year for which emissions are calculated.

W_X = Quantity of waste disposed in the landfill in year X from tipping fee receipts or other company records (metric tons, as received (wet weight)).

L_0 = CH_4 generation potential (metric tons CH_4/metric ton waste) = MCF × DOC × DOC_F × F × 16/12.

MCF = Methane correction factor (fraction); default is 1.

DOC = Degradable organic carbon from Table HH–1 of this subpart or measurement data, if available [fraction (metric tons C/metric ton waste)].

DOC_F = Fraction of DOC dissimilated (fraction); default is 0.5.

F = Fraction by volume of CH_4 in landfill gas from measurement data, if available (fraction); default is 0.5.

k = Rate constant from Table HH–1 of this subpart or measurement data, if available (yr^{-1}).

(2) For years when material-specific waste quantity data are available, apply Equation HH–1 of this section for each waste quantity type and sum the CH_4 generation rates for all waste types to calculate the total modeled CH_4 generation rate for the landfill. Use the appropriate parameter values for k, DOC, MCF, DOC_F, and F shown in Table HH–1 of this subpart. The annual quantity of each type of waste disposed must be calculated as the sum of the daily quantities of waste (of that type) disposed. You may use the bulk waste parameters for a portion of your waste materials when using the material-specific modeling approach for mixed waste streams that cannot be designated to a specific material type. For years when waste composition data are not available, use the bulk waste parameter values for k and L_0 in Table HH–1 of this subpart for the total quantity of waste disposed in those years.

(3) For years prior to reporting for which waste disposal quantities are not readily available, W_X shall be estimated using one of the applicable methods in paragraphs (a)(3)(i) through (a)(3)(iii) of this section. You must determine which method is most applicable to the conditions and disposal history of your facility and use that method to estimate waste disposal quantities.

(i) Assume all prior year waste disposal quantities are the same as the waste quantity in the first reporting year.

(ii) Use the estimated population served by the landfill in each year, the values for national average per capita waste generation, and fraction of generated waste disposed of in solid waste disposal sites found in Table HH–2 of this subpart, and calculate the waste quantity landfilled using Equation HH–2 of this section.

$$W_x = POP_x \times WGR_x \times \frac{\%SWDS_x}{100\%} \qquad \text{(Eq. HH-2)}$$

Where:

W_X = Quantity of waste placed in the landfill in year × (metric tons, wet basis).

POP_X = Population of served by the landfill in year × from city population, census data, or other estimates (capita).

WGR = Average per capita waste generation rate for year x from Table HH–2 of this subpart (metric tons per capita per year, wet basis; tons/cap/yr).

%SWDS = Percent of waste generated subsequently managed in solid waste disposal sites (i.e., landfills) for year × from Table HH–2 of this subpart.

(iii) Use a constant average waste disposal quantity calculated using Equation HH–3 of this section for each year the landfill was in operation (i.e., from first accepting waste until the last year for which waste disposal data is unavailable, inclusive).

$$WAR = \frac{LFC}{(YrData - YrOpen + 1)} \qquad \text{(Eq. HH-3)}$$

Where:

WAR = Annual average waste acceptance rate (metric tons per year).

LFC = Landfill capacity or, for operating landfills, capacity of the landfill currently used from design drawings or engineering estimates (metric tons).

YrData = Year in which the landfill last received waste or, for operating landfills, the year prior to the first reporting year when waste disposal data is first available from company records, or best available data.

YrOpen = Year in which the landfill first received waste from company records or best

available data. If no data are available for estimating YrOpen for a closed landfill, use 30 years as the default operating life of the landfill.

(b) For landfills with gas collection systems, calculate the quantity of CH_4 destroyed according to the requirements in paragraphs (b)(1) and (b)(2) of this section.

(1) If you continuously monitor the flow rate, CH_4 concentration, temperature, pressure, and moisture content of the landfill gas that is collected and routed to a destruction device (before any treatment equipment) using a monitoring meter specifically for CH_4 gas, as specified in §98.344, you must use this monitoring system and calculate the quantity of CH_4 recovered for destruction using Equation HH–4 of this section. A fully integrated system that directly reports CH_4 content requires no other calculation than summing the results of all monitoring periods for a given year.

$$R = \sum_{n=1}^{N}\left((V)_n \times \left[1-\left(f_{H20}\right)_n\right] \times \frac{(C)_n}{100\%} \times 0.0423 \times \frac{520^{o}R}{(T)_n} \times \frac{(P)_n}{1\ atm} \times 1{,}440 \times \frac{0.454}{1{,}000}\right) \quad \text{(Eq. HH-4)}$$

Where:

R = Annual quantity of recovered CH_4 (metric tons CH_4).

N = Total number of measurement periods in a year. Use daily averaging periods for continuous monitoring system (N = 365). For weekly sampling, use N = 52.

n = Index for measurement period.

$(V)_n$ = Daily average volumetric flow rate for day n (acfm). If the flow rate meter automatically corrects for temperature and pressure, replace ''520 °R/$(T)_n$ × $(P)_n$/1 atm'' with ''1''. If the CH_4 concentration is determined on a dry basis and the flow rate meter automatically corrects for moisture/content, replace the term [1 − $(f_{H_2O})_n$] with 1.

$(f_{H_2O})_n$ = Daily average moisture content of landfill gas, volumetric basis (cubic feet water per cubic feet landfill gas).

$(C)_n$ = Daily average CH_4 concentration of landfill gas for day n (volume %, dry basis). If the CH_4 concentration is determined on a wet basis, replace the term [1 − $(f_{H_2O})_n$] with 1.

0.0423 = Density of CH_4 lb/cf at 520 °R or 60 °F and 1 atm.

$(T)_n$ = Temperature at which flow is measured for day n (°R).

$(P)_n$ = Pressure at which flow is measured for day n (atm).

1,440 = Conversion factor (min/day).

0.454/1,000 = Conversion factor (metric ton/lb).

(2) If you do not continuously monitor according to paragraph (b)(1) of this section, you must determine the flow rate, CH_4 concentration, temperature, pressure, and moisture content of the landfill gas that is collected and routed to a destruction device (before any treatment equipment) at least weekly according to the requirements in paragraphs (b)(2)(i) through (b)(2)(iii) of this section and calculate the quantity of CH_4 recovered for destruction using Equation HH–4 of this section.

(i) Continuously monitor gas flow rate and determine the cumulative volume of landfill gas each week and the cumulative volume of landfill gas each year that is collected and routed to a destruction device (before any treatment equipment). Under this option, the gas flow meter is not required to automatically correct for temperature, pressure, or, if necessary, moisture content. If the gas flow meter is not equipped with automatic correction for temperature, pressure, or, if necessary, moisture content, you must determine these parameters as specified in paragraph (b)(2)(iii) of this section.

(ii) Determine the CH_4 concentration in the landfill gas that is collected and routed to a destruction device (before any treatment equipment) in a location near or representative of the location of the gas flow meter no less than weekly.

(iii) If the gas flow meter is not equipped with automatic correction for temperature, pressure, or, if necessary, moisture content:

(A) Determine the temperature, pressure in the landfill gas that is collected

and routed to a destruction device (before any treatment equipment) in a location near or representative of the location of the gas flow meter no less than weekly.

(B) If the CH_4 concentration is determined on a dry basis, determine the moisture content in the landfill gas that is collected and routed to a destruction device (before any treatment equipment) in a location near or representative of the location of the gas flow meter no less than weekly

(c) Calculate CH_4 generation (adjusted for oxidation in cover materials) and actual CH_4 emissions (taking into account any CH_4 recovery, and oxidation in cover materials) according to the applicable methods in paragraphs (c)(1) through (c)(3) of this section.

(1) Calculate CH_4 generation, adjusted for oxidation, from the modeled CH_4 (G_{CH_4} from Equation HH–1 of this section) using Equation HH–5 of this section.

$$MG = G_{CH4} \times (1 - OX) \qquad \text{(Eq. HH-5)}$$

Where:

MG = Methane generation, adjusted for oxidation, from the landfill in the reporting year (metric tons CH_4).

G_{CH4} = Modeled methane generation rate in reporting year from Equation HH–1 of this section (metric tons CH_4).

OX = Oxidation fraction. Use the default value of 0.1 (10%).

(2) For landfills that do not have landfill gas collection systems, the CH_4 emissions are equal to the CH_4 generation (MG) calculated in Equation HH–5 of this section.

(3) For landfills with landfill gas collection systems, calculate CH_4 emissions using the methodologies specified in paragraphs (c)(3)(i) and (c)(3)(ii) of this section.

(i) Calculate CH_4 emissions from the modeled CH_4 generation and measured CH_4 recovery using Equation HH–6 of this section.

$$\text{Emissions} = \left[\left(G_{CH4} - R \right) \times \left(1 - OX \right) + R \times \left(1 - \left(DE \times f_{Dest} \right) \right) \right] \qquad \text{(Eq. HH-6)}$$

Where:

Emissions = Methane emissions from the landfill in the reporting year (metric tons CH_4).

G_{CH_4} = Modeled methane generation rate in reporting year from Equation HH–1 of this section or the quantity of recovered CH_4 from Equation HH–4 of this section, whichever is greater (metric tons CH_4).

R = Quantity of recovered CH_4 from Equation HH–4 of this section (metric tons).

OX = Oxidation fraction. Use the oxidation fraction default value of 0.1 (10%).

DE = Destruction efficiency (lesser of manufacturer's specified destruction efficiency and 0.99). If the gas is transported off-site for destruction, use DE = 1.

f_{Dest} = Fraction of hours the destruction device was operating (annual operating hours/8760 hours per year). If the gas is destroyed in a back-up flare (or simlar device) or if the gas is transported off-site for destruction, use f_{Dest} = 1.

(ii) Calculate CH_4 generation and CH_4 emissions using measured CH_4 recovery and estimated gas collection efficiency and Equations HH–7 and HH–8 of this section.

$$MG = \frac{R}{CE \times f_{Rec}} \times (1 - OX) \qquad \text{(Eq. HH-7)}$$

$$\text{Emissions} = \left[\left(\frac{R}{CE \times f_{Rec}} - R \right) \times \left(1 - OX \right) + R \times \left(1 - \left(DE \times f_{Dest} \right) \right) \right] \qquad \text{(Eq. HH-8)}$$

Where:

MG = Methane generation, adjusted for oxidation, from the landfill in the reporting year (metric tons CH_4).

Emissions = Methane emissions from the landfill in the reporting year (metric tons CH_4).

R = Quantity of recovered CH_4 from Equation HH–4 of this section (metric tons CH_4).

CE = Collection efficiency estimated at landfill, taking into account system coverage, operation, and cover system materials from Table HH–3 of this subpart. If area by soil cover type information is not available, use default value of 0.75 (CE4 in table HH–3 of this subpart) for all areas under active influence of the collection system.

f_{Rec} = Fraction of hours the recovery system was operating (annual operating hours/8760 hours per year).

OX = Oxidation fraction. Use the oxidation fractions default value of 0.1 (10%).

DE = Destruction efficiency, (lesser of manufacturer's specified destruction efficiency and 0.99). If the gas is transported off-site for destruction, use DE = 1.

f_{Dest} = Fraction of hours the destruction device was operating (device operating hours/8760 hours per year). If the gas is destroyed in a back-up flare (or similar device) or if the gas is transported off-site for destruction, use f_{Dest} = 1.

§ 98.344 Monitoring and QA/QC requirements.

(a) The quantity of waste landfilled must be determined using mass measurement equipment meeting the requirements for commercial weighing equipment as described in ''Specifications, Tolerances, and Other Technical Requirements For Weighing and Measuring Devices'' NIST Handbook 44 (2009)(incorporated by reference, see § 98.7).

(b) For landfills with gas collection systems, install, operate, maintain, and calibrate a gas composition monitor capable of measuring the concentration of CH4 in the recovered landfill gas using one of the methods specified in paragraphs (b)(1) through (b)(6) of this section or as specified by the manufacturer. Gas composition monitors shall be calibrated prior to the first reporting year and recalibrated either annually or at the minimum frequency specified by the manufacturer, whichever is more frequent, or whenever the error in the midrange calibration check exceeds ± 10 percent.

(1) Method 18 at 40 CFR part 60, appendix A–6.

(2) ASTM D1945–03, Standard Test Method for Analysis of Natural Gas by Gas Chromatography (incorporated by reference, *see* § 98.7).

(3) ASTM D1946–90 (Reapproved 2006), Standard Practice for Analysis of Reformed Gas by Gas Chromatography (incorporated by reference, *see* § 98.7).

(4) GPA Standard 2261–00, Analysis for Natural Gas and Similar Gaseous Mixtures by Gas Chromatography.

(5) UOP539–97 Refinery Gas Analysis by Gas Chromatography (incorporated by reference, see § 98.7).

(6) As an alternative to the gas chromatography methods provided in paragraphs (b)(1) through (b)(5) of this section, you may use total gaseous organic concentration analyzers and calculate the methane concentration following the requirements in paragraphs (b)(6)(i) through (b)(6)(iii) of this section.

(i) Use Method 25A or 25B at 40 CFR part 60, appendix A–7 to determine total gaseous organic concentration. You must calibrate the instrument with methane and determine the total gaseous organic concentration as carbon (or as methane; K=1 in Equation 25A–1 of Method 25A at 40 CFR part 60, appendix A–7).

(ii) Determine a non-methane organic carbon correction factor no less frequently than once a reporting year following the requirements in paragraphs (b)(6)(ii)(A) through (b)(6)(ii)(C) of this section.

(A) Take a minimum of three grab samples of the landfill gas that is collected and routed to a destruction device (before any treatment equipment) with a minimum of 20 minutes between samples and determine the methane composition of the landfill gas using one of the methods specificed in paragraphs (b)(1) through (b)(5) of this section.

(B) As soon as practical after each grab sample is collected and prior to the collection of a subsequent grab sample, determine the total gaseous organic concentration of the landfilll gas that is collected and routed to a destruction device (before any treatment equipment) using either Method 25A or 25B at 40 CFR part 60, appendix A–7 as specified in paragaph (b)(6)(i) of this section.

(C) Determine the arithmetic average methane concentration and the arithmetic average total gaseous organic concentration of the samples analyzed according to paragraphs (b)(6)(ii)(A) and (b)(6)(ii)(B) of this section, respectively, and calculate the non-methane organic carbon correction factor as the ratio of the average methane concentration to the average total gaseous organic concentration. If the ratio exceeds 1, use 1 for the non-methane organic carbon correction factor.

(iii) Calculate the methane concentration as specified in Equation HH–9 of this section.

$$C_{CH4} = f_{NMOC} \times C_{TGOC} \qquad \text{(Eq. HH-9)}$$

Where:

C_{CH4} = Methane concentration in the landfill gas (volume %).

f_{NMOC} = Non-methane organic carbon correction factor from the most recent determination of the non-methane organic carbon correction factor as specified in paragraph (b)(6)(ii) of this section (unitless).

C_{TGOC} = Total gaseous organic carbon concentration measured using Method 25A or 25B at 40 CFR part 60, appendix A–7 during routine monitoring of the landfill gas (volume %).

(c) For landfills with gas collection systems, install, operate, maintain, and calibrate a gas flow meter capable of measuring the volumetric flow rate of the recovered landfill gas using one of the methods specified in paragraphs (c)(1) through (c)(8) of this section or as specified by the manufacturer. Each gas flow meter shall be calibrated prior to the first year of reporting and recalibrated either biennially (every 2 years) or at the minimum frequency specified by the manufacturer. Except as provided in § 98.343(b)(2)(i), each gas flow meter must be capable of correcting for the temperature and pressure and, if the gas composition monitor determines CH_4 concentration on a dry basis, moisture content.

(1) ASME MFC–3M–2004, Measurement of Fluid Flow in Pipes Using Orifice, Nozzle, and Venturi (incorporated by reference, *see* § 98.7).

(2) ASME MFC–4M–1986 (Reaffirmed 1997), Measurement of Gas Flow by Turbine Meters (incorporated by reference, *see* § 98.7).

(3) ASME MFC–6M–1998, Measurement of Fluid Flow in Pipes Using Vortex Flowmeters (incorporated by reference, *see* § 98.7).

(4) ASME MFC–7M–1987 (Reaffirmed 1992), Measurement of Gas Flow by Means of Critical Flow Venturi Nozzles (incorporated by reference, *see* § 98.7).

(5) ASME MFC–11M–2006 Measurement of Fluid Flow by Means of Coriolis Mass Flowmeters (incorporated by reference, *see* § 98.7). The mass flow must be corrected to volumetric flow based on the measured temperature, pressure, and gas composition.

(6) ASME MFC–14M–2003 Measurement of Fluid Flow Using Small Bore Precision Orifice Meters (incorporated by reference, *see* § 98.7).

(7) ASME MFC–18M–2001 Measurement of Fluid Flow using Variable Area Meters (incorporated by reference, *see* § 98.7).

(8) Method 2A or 2D at 40 CFR part 60, appendix A–1.

(d) All temperature and pressure monitors must be calibrated using the procedures and frequencies specified by the manufacturer.

(e) The owner or operator shall document the procedures used to ensure the accuracy of the estimates of disposal quantities and, if applicable, gas flow rate, gas composition, temperature, and pressure measurements. These procedures include, but are not limited to, calibration of weighing equipment, fuel flow meters, and other measurement devices. The estimated accuracy of measurements made with these devices shall also be recorded, and the technical basis for these estimates shall be provided.

§ 98.345 Procedures for estimating missing data.

A complete record of all measured parameters used in the GHG emissions calculations is required. Therefore, whenever a quality-assured value of a required parameter is unavailable (e.g., if a meter malfunctions during unit operation or if a required fuel sample is not taken), a substitute data value for the missing parameter shall be used in the calculations, according to the requirements in paragraphs (a) through (c) of this section.

(a) For each missing value of the CH_4 content, the substitute data value shall be the arithmetic average of the quality-assured values of that parameter immediately preceding and immediately following the missing data incident. If the ''after'' value is not obtained by the end of the reporting year, you may use the ''before'' value for the missing data substitution. If, for a particular parameter, no quality-assured data are available prior to the missing data incident, the substitute data value shall be the first quality-assured value obtained after the missing data period.

(b) For missing gas flow rates, the substitute data value shall be the arithmetic average of the quality-assured values of that parameter immediately preceding and immediately following the missing data incident. If the ''after'' value is not obtained by the end of the reporting year, you may use the ''before'' value for the missing data substitution. If, for a particular parameter, no quality-assured data are available prior to the missing data incident, the substitute data value shall be the first quality-assured value obtained after the missing data period.

(c) For missing daily waste disposal quantity data for disposal in reporting years, the substitute value shall be the average daily waste disposal quantity for that day of the week as measured on the week before and week after the missing daily data.

§ 98.346 Data reporting requirements.

In addition to the information required by § 98.3(c), each annual report must contain the following information for each landfill.

(a) A classification of the landfill as ''open'' (actively received waste in the reporting year) or ''closed'' (no longer receiving waste), the year in which the landfill first started accepting waste for disposal, the last year the landfill accepted waste (for open landfills, enter the estimated year of landfill closure), the capacity (in metric tons) of the landfill, an indication of whether leachate recirculation is used, and the waste disposal quantity for each year of landfilling.

(b) Method for estimating waste disposal quantity, and reason for its selection.

(c) Waste composition for each year of landfilling, if available, in percentage categorized as:

(1) Municipal.

(2) Biosolids or biological sludges.

(3) Other, or more refined categories, such as those for which k rates are available in Table HH–1 of this subpart, and the method or basis for estimating waste composition.

(d) For each waste type used to calculate CH_4 generation using Equation HH–1 of this subpart, you must report:

(1) Degradable organic carbon (DOC) value used in the calculations.

(2) Decay rate (k) value used in the calculations.

(e) Fraction of CH_4 in landfill gas (F) and an indication of whether the fraction of CH_4 was determined based on measured values or the default value.

(f) The surface area of the landfill containing waste (in square meters), the cover types applicable to the landfill, the surface area and oxidation fraction for each cover type used to calculate the average oxidation fraction, and the average oxidation fraction used in the calculations.

(g) The modeled annual methane generation rate for the reporting year (metric tons CH_4) calculated using Equation HH–1 of this subpart.

(h) For landfills without gas collection systems, the annual methane emissions (i.e., the methane generation, adjusted for oxidation, calculated using Equation HH–5 of this subpart), reported in metric tons CH_4.

(i) For landfills with gas collection systems, you must report:

(1) Total volumetric flow of landfill gas collected for destruction (cubic feet at 520 °R or 60 °F and 1 atm).

(2) CH_4 concentration of landfill gas collected for destruction (percent by volume).

(3) Monthly average temperature for each month at which flow is measured for landfill gas collected for destruction, or statement that temperature is incorporated into internal calculations run by the monitoring equipment.

(4) Monthly average pressure for each month at which flow is measured for landfill gas collected for destruction,

or statement that temperature is incorporated into internal calculations run by the monitoring equipment.

(5) An indication of whether destruction occurs at the landfill facility or off-site. If destruction occurs at the landfill facility, also report an indication of whether a back-up destruction device is present at the landfill, the annual operating hours for the primary destruction device, the annual operating hours for the back-up destruction device (if present), and the destruction efficiency used (percent).

(6) Annual quantity of recovered CH_4 (metric tons CH_4) calculated using Equation HH–4 of this subpart.

(7) A description of the gas collection system (manufacture, capacity, number of wells, etc.), the surface area (square meters) and estimated waste depth (meters) for each area specified in Table HH–3 of this subpart, the estimated gas collection system efficiency for landfills with this gas collection system, and the annual operating hours of the gas collection system.

(8) Methane generation corrected for oxidation calculated using Equation HH–5 of this subpart, reported in metric tons CH_4.

(9) Methane generation (G_{CH4}) value used as an input to Equation HH–6 of this subpart. Specify whether the value is modeled (G_{CH4} from HH–1 of this subpart) or measured (R from Equation HH–4 of this subpart).

(10) Methane generation corrected for oxidation calculated using Equation HH–7 of this subpart, reported in metric tons CH_4.

(11) Methane emissions calculated using Equation HH–6 of this subpart, reported in metric tons CH_4.

(12) Methane emissions calculated using Equation HH–8 of this subpart, reported in metric tons CH_4.

§ 98.347 Records that must be retained.

In addition to the information required by § 98.3(g), you must retain the calibration records for all monitoring equipment, including the method or manufacturer's specification used for calibration.

§ 98.348 Definitions.

All terms used in this subpart have the same meaning given in the Clean Air Act and subpart A of this part.

TABLE HH–1 TO SUBPART HH OF PART 98—EMISSIONS FACTORS, OXIDATION FACTORS AND METHODS

Factor	Default value	Units
Waste model—bulk waste option		
k (precipitation <20 inches/year and no leachate recirculation).	0.02	yr^{-1}
k (precipitation 20–40 inches/year and no leachate recirculation).	0.038	yr^{-1}
k (precipitation >40 inches/year or for landfill areas with leachate recirculation).	0.057	yr^{-1}
L_0 (Equivalent to DOC = 0.2028 when MCF = 1, DOC_F = 0.5, and F = 0.5).	0.067	metric tons CH_4/metric ton waste
Waste model—All MSW landfills		
MCF	1.	
DOC_F	0.5.	
F	0.5.	
Waste model—MSW using waste composition option		
DOC (food waste)	0.15	Weight fraction, wet basis
DOC (garden)	0.2	Weight fraction, wet basis
DOC (paper)	0.4	Weight fraction, wet basis
DOC (wood and straw)	0.43	Weight fraction, wet basis
DOC (textiles)	0.24	Weight fraction, wet basis
DOC (diapers)	0.24	Weight fraction, wet basis
DOC (sewage sludge)	0.05	Weight fraction, wet basis
DOC (bulk waste)	0.20	Weight fraction, wet basis
k (food waste)	0.06 to 0.185[a]	yr^{-1}
k (garden)	0.05 to 0.10[a]	yr^{-1}

TABLE HH–1 TO SUBPART HH OF PART 98—EMISSIONS FACTORS, OXIDATION FACTORS AND METHODS—Continued

Factor	Default value	Units
k (paper)	0.04 to 0.06 [a]	yr^{-1}
k (wood and straw)	0.02 to 0.03 [a]	yr^{-1}
k (textiles)	0.04 to 0.06 [a]	yr^{-1}
k (diapers)	0.05 to 0.10 [a]	yr^{-1}
k (sewage sludge)	0.06 to 0.185 [a]	yr^{-1}
Calculating methane generation and emissions		
OX	0.1.	
DE	0.99.	

[a] Use the lesser value when the potential evapotranspiration rate exceeds the mean annual precipitation rate and leachate recirculation is not used. Use the greater value when the potential evapotranspiration rate does not exceed the mean annual precipitation rate or when leachate recirculation is used.

TABLE HH–2 TO SUBPART HH OF PART 98—U.S. PER CAPITA WASTE DISPOSAL RATES

Year	Waste per capita ton/cap/yr	% to SWDS
1950	0.63	100
1951	0.63	100
1952	0.63	100
1953	0.63	100
1954	0.63	100
1955	0.63	100
1956	0.63	100
1957	0.63	100
1958	0.63	100
1959	0.63	100
1960	0.63	100
1961	0.64	100
1962	0.64	100
1963	0.65	100
1964	0.65	100
1965	0.66	100
1966	0.66	100
1967	0.67	100
1968	0.68	100
1969	0.68	100
1970	0.69	100
1971	0.69	100
1972	0.70	100
1973	0.71	100
1974	0.71	100
1975	0.72	100
1976	0.73	100
1977	0.73	100
1978	0.74	100
1979	0.75	100

TABLE HH–2 TO SUBPART HH OF PART 98—U.S. PER CAPITA WASTE DISPOSAL RATES—Continued

Year	Waste per capita ton/cap/yr	% to SWDS
1980	0.75	100
1981	0.76	100
1982	0.77	100
1983	0.77	100
1984	0.78	100
1985	0.79	100
1986	0.79	100
1987	0.80	100
1988	0.80	100
1989	0.85	84
1990	0.84	77
1991	0.78	76
1992	0.76	72
1993	0.78	71
1994	0.77	67
1995	0.72	63
1996	0.71	62
1997	0.72	61
1998	0.78	61
1999	0.78	60
2000	0.84	61
2001	0.95	63
2002	1.06	66
2003	1.06	65
2004	1.06	64
2005	1.06	64
2006	1.06	64

TABLE HH–3 TO SUBPART HH OF PART 98—LANDFILL GAS COLLECTION EFFICIENCIES

Description	Landfill Gas Collection Efficiency
A1: Area with no waste in-place	Not applicable; do not use this area in the calculation.
A2: Area without active gas collection, regardless of cover type	CE2: 0%.
H2: Average depth of waste in area A2	
A3: Area with daily soil cover and active gas collection	CE3: 60%.
H3: Average depth of waste in area A3	
A4: Area with an intermediate soil cover and active gas collection.	CE4: 75%.
H4: Average depth of waste in area A4	
A5: Area with a final soil and geomembrane cover system and active gas collection.	CE5: 95%.
H5: Average depth of waste in area A5	
Area weighted average collection efficiency for landfills	CEave1 = (A2*CE2 + A3*CE3 + A4*CE4 + A5*CE5)/(A2+A3+A4+A5).

Subpart II [Reserved]

Subpart JJ—Manure Management

§ 98.360 Definition of the source category.

(a) This source category consists of livestock facilities with manure management systems that emit 25,000 metric tons CO_2e or more per year.

(1) Table JJ–1 presents the minimum average annual animal population by animal group that is estimated to emit 25,000 metric tons CO_2e or more per year. Facilities with an average annual animal population, as described in § 98.363(a)(1) and (2), below those listed in Table JJ–1 do not need to report under this rule. A facility with an annual animal population that exceeds those listed in Table JJ–1 should conduct a more thorough analysis to determine applicability.

(2) (i) If a facility has more than one animal group present (e.g., swine and poultry), the facility must determine if they are required to report by calculating the combined animal group factor (CAGF) using equation JJ–1:

$$CAGF = \sum_{\text{Animal Groups}} \left(\frac{AAAP_{AG,\ Facility}}{APTL_{AG}} \right) \qquad \text{(Eq. JJ-1)}$$

Where:

CAGF = Combined Animal Group Factor

$AAAP_{AG,Facility}$ = Average annual animal population at the facility, by animal group

$APTL_{AG}$ = Animal population threshold level, as specified in Table JJ–1 of this section

(ii) If the calculated CAGF for a facility is less than 1, the facility is not required to report under this rule. If the CAGF is equal to or greater than 1, the facility must use more detailed applicability tables and tools to determine if they are required to report under this rule.

(b) A manure management system (MMS) is a system that stabilizes and/or stores livestock manure, litter, or manure wastewater in one or more of the following system components: Uncovered anaerobic lagoons, liquid/slurry systems with and without crust covers (including but not limited to ponds and tanks), storage pits, digesters, solid manure storage, dry lots (including feedlots), high-rise houses for poultry production (poultry without litter), poultry production with litter, deep bedding systems for cattle and swine, manure composting, and aerobic treatment.

(c) This source category does not include system components at a livestock facility that are unrelated to the stabilization and/or storage of manure such as daily spread or pasture/range/paddock systems or land application activities or any method of manure utilization that is not listed in § 98.360(b).

(d) This source category does not include manure management activities located off site from a livestock facility or off-site manure composting operations.

§ 98.361 Reporting threshold.

Livestock facilities must report GHG emissions under this subpart if the facility meets the reporting threshold as defined in 98.360(a) above, contains a manure management system as defined in 98.360(b) above, and meets the requirements of § 98.2(a)(1).

§ 98.362 GHGs to report.

(a) Livestock facilities must report annual aggregate CH_4 and N_2O emissions for the following MMS components at the facility:

(1) Uncovered anaerobic lagoons.

(2) Liquid/slurry systems (with and without crust covers, and including but not limited to ponds and tanks).

(3) Storage pits.

(4) Digesters, including covered anaerobic lagoons.

(5) Solid manure storage.

(6) Dry lots, including feedlots.

(7) High-rise houses for poultry production (poultry without litter)

(8) Poultry production with litter.

(9) Deep bedding systems for cattle and swine.

(10) Manure composting.

(11) Aerobic treatment.

(b) A livestock facility that is subject to this rule only because of emissions from manure management system components is not required to report emissions from subparts C through PP (other than subpart JJ) of this part.

(c) A livestock facility that is subject to this part because of emissions from source categories described in subparts C through PP of this part is not required to report emissions under subpart JJ of this part unless emissions from manure management systems are 25,000 metric tons CO_2e per year or more.

§ 98.363 Calculating GHG emissions.

(a) For all manure management system components listed in 98.360(b) except digesters, estimate the annual CH_4 emissions and sum for all the components to obtain total emissions from the manure management system for all animal types using Equation JJ–1.

$$CH_4\ \text{Emissions}_{MMS}\ (\text{metric tons/yr}) = \sum_{\text{animal types}}\left[\sum_{MMSC}\left[\left(TVS_{AT}\ \text{x}\ VS_{MMSC}\ \text{x}\left(1-VS_{ss}\right)\ \text{x}\ 365\ \text{days/yr}\ \text{x}\left(B_0\right)_{AT}\ \text{x}\ MCF_{MMSC}\right)\text{x}\ 0.662\ \text{kg}\ CH_4/m^3\ \text{x}\ 1\ \text{metric ton/1000 kg}\right]\right] \quad \text{(Eq. JJ-2)}$$

Where:

MMSC = Manure management systems component.

TVS_{AT} = Total volatile solids excreted by animal type, calculated using Equation JJ–3 of this section (kg/day).

VS_{MMSC} = Fraction of the total manure for each animal type that is managed in MMS component MMSC, assumed to be equivalent to the fraction of VS in each MMS component.

VS_{ss} = Volatile solids removal through solid separation; if solid separation occurs prior to the MMS component, use a default value from Table JJ–4 of this section; if no solid separation occurs, this value is set to 0.

$(B_0)_{AT}$ = Maximum CH_4-producing capacity for each animal type, as specified in Table JJ–2 of this section (m^3 CH_4/kg VS).

MCF_{MMSC} = CH_4 conversion factor for the MMS component, as specified in Table JJ–5 of this section (decimal).

$$TVS_{AT} = \text{Population}_{AT} \times TAM_{AT} \times VS_{AT}/1000 \quad \text{(Eq. JJ-3)}$$

Where:

TVS_{AT} = Daily total volatile solids excreted per animal type (kg/day).

Population_{AT} = Average annual animal population contributing manure to the manure management system by animal type (head) (see description in § 98.363(a)(i) and (ii) below).

TAM_{AT} = Typical animal mass for each animal type, using either default values in Table JJ–2 of this section or farm-specific data (kg/head).

VS_{AT} = Volatile solids excretion rate for each animal type, using default values in Table JJ–2 or JJ–3 of this section (kg VS/day/1000 kg animal mass).

(1) Average annual animal populations for static populations (e.g., dairy cows, breeding swine, layers) must be estimated by performing an animal inventory or review of facility records once each reporting year.

(2) Average annual animal populations for growing populations (meat animals such as beef and veal cattle, market swine, broilers, and turkeys) must be estimated each year using the average number of days each animal is kept at the facility and the number of animals produced annually, and an equation similar or equal to Equation JJ–4 below, adapted from Equation 10.1 in *2006 IPCC Guidelines for National Greenhouse Gas Inventories*, Volume 4, Chapter 10.

$$\text{Population}_{AT} = \text{Days onsite}_{AT} \times \left(\frac{\text{NAPA}_{AT}}{365} \right) \qquad \text{(Eq. JJ-4)}$$

Where:

Population_{AT} = Average annual animal population (by animal type).

Days onsite_{AT} = Average number of days the animal is kept at the facility, by animal type.

NAPA_{AT} = Number of animals produced annually, by animal type.

(b) For each digester, calculate the total amount of CH_4 emissions, and then sum the emissions from all digesters, as shown in Equation JJ–5 of this section.

$$\text{H}_4\ \text{Emissions}_{AD} = \sum_{1}^{AD} \left(CH_4C - CH_4D + CH_4L \right) \qquad \text{(Eq. JJ-5)}$$

Where:

CH_4 Emissions_{AD} = CH_4 emissions from anaerobic digestion (metric tons/yr).

AD = Number of anaerobic digesters at the manure management facility.

CH_4C = CH_4 flow to digester combustion device, calculated using Equation JJ–6 of this section (metric tons CH_4/yr).

CH_4D = CH_4 destruction at digesters, calculated using Equation JJ–11 of this section (metric tons CH_4/yr)

CH_4L = Leakage at digesters calculated using Equation JJ–12 of this section (metric tons CH_4/yr).

(1) For each digester, calculate the annual CH_4 flow to the combustion device (CH_4C) using Equation JJ–6 of this section. A fully integrated system that directly reports the quantity of CH_4 flow to the digester combustion device requires only summing the results of all monitoring periods for a given year to obtain CH_4C.

$$CH_4C = \left(V \times \frac{C}{100\%} \times 0.0423 \times \frac{520^{o}R}{T} \times \frac{P}{1\ \text{atm}} \times \frac{0.454\ \text{metric ton}}{1{,}000\ \text{pounds}} \right) \qquad \text{(Eq. JJ-6)}$$

Where:

CH_4C = CH_4 flow to digester combustion device (metric tons CH_4/yr).

V = Average annual volumetric flow rate, calculated in Equation JJ–7 of this subsection (cubic feet CH_4/yr).

C = Average annual CH_4 concentration of digester gas, calculated in Equation JJ–8 of this section (%, wet basis).

0.0423 = Density of CH_4 lb/scf (at 520 °R or 60 °F and 1 atm).

T = Average annual temperature at which flow is measured, calculated in Equation JJ–9 of this section (°R).

P = Average annual pressure at which flow is measured, calculated in Equation JJ–10 of this section (atm).

(2) For each digester, calculate the average annual volumetric flow rate, CH_4 concentration of digester gas, temperature, and pressure at which flow are measured using Equations JJ–7 through JJ–10 of this section.

$$V = \frac{\sum_{n=1}^{OD}\left(V_n \times \frac{1,440 \text{ minutes}}{\text{day}}\right)}{OD} \qquad \text{(Eq. JJ-7)}$$

Where:

V = Average annual volumetric flow rate (cubic feet CH_4/yr).

OD = Operating days, number of days per year that that the digester was operating (days/yr).

V_n = Daily average volumetric flow rate for day n, as determined from daily monitoring as specified in § 98.364 (acfm).

$$C = \frac{\sum_{n=1}^{OD} C_n}{OD} \qquad \text{(Eq. JJ-8)}$$

Where:

C = Average annual CH_4 concentration of digester gas (%, wet basis).

OD = Operating days, number of days per year that the digester was operating (days/yr).

C_n = Average daily CH_4 concentration of digester gas for day n, as determined from daily monitoring as specified in § 98.364 (%, wet basis).

$$T = \frac{\sum_{n=1}^{OD} T_n}{OD} \qquad \text{(Eq. JJ-9)}$$

Where:

T = Average annual temperature at which flow is measured (°R).

OD = Operating days, number of days per year that the digester was operating (days/yr).

T_n = Temperature at which flow is measured for day n(°R).

$$P = \frac{\sum_{n=1}^{OD} P_n}{OD} \qquad \text{(Eq. JJ-10)}$$

Where:

P = Average annual pressure at which flow is measured (atm).

OD = Operating days, number of days per year that the digester was operating (days/yr).

P_n = Pressure at which flow is measured for day n (atm).

(3) For each digester, calculate the CH_4 destruction at the digester combustion device using Equation JJ–11 of this section.

$$CH_4D = CH_4C \times DE \times OH/\text{Hours} \qquad \text{(Eq. JJ-11)}$$

Where:

CH_4D = CH_4 destruction at digester combustion device (metric tons/yr).

CH_4C = Annual quantity of CH_4 flow to digester combustion device, as calculated in Equation JJ–6 of this section (metric tons CH_4).

DE = CH_4 destruction efficiency from flaring or burning in engine (lesser of manufacturer's specified destruction efficiency and 0.99). If the gas is transported off-site for destruction, use DE = 1.

OH = Number of hours combustion device is functioning in reporting year.

Hours = Hours in reporting year.

(4) For each digester, calculate the CH_4 leakage using Equation JJ–12 of this section.

$$CH_4L = CH_4C \times \left(\frac{1}{CE} - 1\right) \qquad \text{(Eq. JJ-12)}$$

Where:

CH_4L = Leakage at digesters (metric tons/yr).

CH_4C = Annual quantity of CH_4 flow to digester combustion device, as calculated in Equation JJ–6 of this section (metric tons CH_4).

CE = CH_4 collection efficiency of anaerobic digester, as specified in Table JJ–6 of this section (decimal).

(c) For each MMS component, estimate the annual N_2O emissions and sum for all MMS components to obtain total emissions from the manure management system for all animal types using Equation JJ–13 of this section.

$$\text{Direct } N_2O \text{ Emissions (metric tons/year)} = \sum_{\text{animal types}} \left[\sum_{MMSC} N_{ex\ AT} \times N_{ex,MMSC} \times \left(1 - N_{ss}\right) \times EF_{MMSC} \times 365 \text{ days/yr} \right] \times 44\ N_2O/28\ N_2O-N \times 1 \text{ metric ton}/1000 \text{ kg} \right] \quad \text{(Eq. JJ-13)}$$

Where:

$N_{ex\ AT}$ = Daily total nitrogen excreted per animal type, calculated using Equation JJ–14 of this section (kg N/day).

$N_{ex,MMSC}$ = Fraction of the total manure for each animal type that is managed in MMS component MMSC, assumed to be equivalent to the fraction of N_{ex} in each MMS component.

N_{ss} = Nitrogen removal through solid separation; if solid separation occurs prior to the MMS component, use a default value from Table JJ–4 of this section; if no solid separation occurs, this value is set to 0.

EF_{MMSC} = Emission factor for MMS component, as specified in Table JJ–7 of this section (kg N_2O-N/kg N).

$$N_{ex\ AT} = \text{Population}_{AT} \times TAM_{AT} \times N_{AT}/1000 \quad \text{(Eq. JJ-14)}$$

Where:

$N_{ex\ AT}$ = Total nitrogen excreted per animal type (kg/day).

Population_{AT} = Average annual animal population contributing manure to the manure management system by animal type (head) (see description in § 98.363(a)(i) and (ii)).

TAM_{AT} = Typical animal mass by animal type, using either default values in Table JJ–2 of this section or farm-specific data (kg/head).

N_{AT} = Nitrogen excretion rate by animal type, using default values in Tables JJ–2 or JJ–3 of this section (kg N/day/1000 kg animal mass).

(d) Estimate the annual total facility emissions using Equation JJ–15 of this section.

$$\text{Total Emissions (metric tons } CO_2e\text{/yr)} = \left[\left(CH_4 \text{ emissions}_{MMS} + CH_4 \text{ emissions}_{AD} \right) \text{x } 21 \right] + \left[\text{Direct } N_2O \text{ emissions x } 310 \right] \quad \text{(Eq. JJ-15)}$$

Where:

CH_4 emissions_{MMS} = From Equation JJ–2 of this section.

CH_4 emissions_{AD} = From Equation JJ–5 of this section.

21 = Global Warming Potential of CH_4.

Direct N_2O emissions = From Equation JJ–13 of this section.

310 = Global Warming Potential of N_2O.

§ 98.364 Monitoring and QA/QC requirements.

(a) Perform an annual animal inventory or review of facility records (for static populations) or population calculation (for growing populations) to determine the average annual animal population for each animal type (see description in § 98.363(a)(1) and (2)).

(b) Perform an analysis on your operation to determine the fraction of total manure by weight for each animal type

that is managed in each on-site manure management system component. If your system changes from previous reporting periods, you must reevaluate the fraction of total manure managed in each system component.

(c) The CH_4 concentration of gas from digesters must be determined using ASTM D1946–90 (Reapproved 2006) Standard Practice for Analysis of Reformed Gas by Gas Chromatography (incorporated by reference *see* § 98.7). All gas composition monitors shall be calibrated prior to the first reporting year for biogas methane and carbon dioxide content using ASTM D1946–90 (Reapproved 2006) Standard Practice for Analysis of Reformed Gas by Gas Chromatography (incorporated by reference *see* § 98.7)and recalibrated either annually or at the minimum frequency specified by the manufacturer, whichever is more frequent, or whenever the error in the midrange calibration check exceeds ± 10 percent. All monitors shall be maintained as specified by the manufacturer.

(d) All temperature and pressure monitors must be calibrated using the procedures and frequencies specified by the manufacturer. All equipment (temperature and pressure monitors) shall be maintained as specified by the manufacturer.

(e) For digesters with gas collection systems, install, operate, maintain, and calibrate a gas flow meter capable of measuring the volumetric flow rate to provide data for the GHG emissions calculations, using the applicable methods specified in paragraphs (e)(1) through (e)(6) of this section or as specified by the manufacturer.

(1) ASME MFC–3M–2004 Measurement of Fluid Flow in Pipes Using Orifice, Nozzle, and Venturi (incorporated by reference, *see* § 98.7).

(2) ASME MFC–4M–1986 (Reaffirmed 1997) Measurement of Gas Flow by Turbine Meters (incorporated by reference, *see* § 98.7).

(3) ASME MFC–6M–1998 Measurement of Fluid Flow in Pipes Using Vortex Flowmeters (incorporated by reference, *see* § 98.7).

(4) ASME MFC–7M–1987 (Reaffirmed 1992) Measurement of Gas Flow by Means of Critical Flow Venturi Nozzles (incorporated by reference, *see* § 98.7).

(5) ASME MFC–14M–2003 Measurement of Fluid Flow Using Small Bore Precision Orifice Meters (incorporated by reference, *see* § 98.7).

(6) ASME MFC–18M–2001 Measurement of Fluid Flow using Variable Area Meters (incorporated by reference, *see* § 98.7).

(f) If applicable, the owner or operator shall document the procedures used to ensure the accuracy of gas flow rate, gas composition, temperature, and pressure measurements. These procedures include, but are not limited to, calibration of fuel flow meters and other measurement devices. The estimated accuracy of measurements made with these devices shall also be recorded, and the technical basis for these estimates shall be provided.

(g) Each gas flow meter shall be calibrated prior to the first reporting year and recalibrated either annually or at the minimum frequency specified by the manufacturer, whichever is more frequent. Each gas flow meter must have a rated accuracy of ± 5 percent or lower and be capable of correcting for the temperature and pressure and, if the gas composition monitor determines CH_4 concentration on a dry basis, moisture content.

§ 98.365 Procedures for estimating missing data.

(a) A complete record of all measured parameters used in the GHG emissions calculations is required. Therefore, whenever a quality-assured value of a required parameter is unavailable (e.g., if a meter malfunctions during unit operation or if a required fuel sample is not taken), a substitute data value for the missing parameter shall be used in the calculations, according to the requirements in paragraph (b) of this section.

(b) For missing gas flow rates or CH_4 content data, the substitute data value shall be the arithmetic average of the quality-assured values of that parameter immediately preceding and immediately following the missing data incident. If, for a particular parameter, no quality-assured data are available prior to the missing data incident, the substitute data value shall be the first quality-assured value obtained after the missing data period.

§ 98.366 Data reporting requirements.

(a) In addition to the information required by § 98.3(c), each annual report must contain the following information:

(1) List of manure management system components at the facility.

(2) Fraction of manure from each animal type that is handled in each manure management system component.

(3) Average annual animal population (for each animal type) for static populations or the results of Equation JJ–4 for growing populations.

(4) Average number of days that growing animals are kept at the facility (for each animal type).

(5) The number of animals produced annually for growing populations (for each animal type).

(6) Typical animal mass (for each animal type).

(7) Total facility emissions (results of Equation JJ–15).

(8) CH_4 emissions from manure management system components listed in § 98.360(b), except digesters (results of Equation JJ–2).

(9) VS value used (for each animal type).

(10) B_0 value used (for each animal type).

(11) Methane conversion factor used for each MMS component.

(12) Average ambient temperature used to select each methane conversion factor.

(13) N_2O emissions (results of Equation JJ–13).

(14) N value used for each animal type.

(15) N_2O emission factor selected for each MMS component.

(b) Facilities with anaerobic digesters must also report:

(1) CH_4 emissions from anaerobic digesters (results of Equation JJ–5).

(2) CH_4 flow to the digester combustion device for each digester (results of Equation JJ–6, or value from fully integrated monitoring system as described in 98.363(b)).

(3) CH_4 destruction for each digester (results of Equation JJ–11).

(4) CH_4 leakage for each digester (results of Equation JJ–12).

(5) Total annual volumetric biogas flow for each digester (results of Equation JJ–7).

(6) Average annual CH_4 concentration for each digester (results of Equation JJ–8).

(7) Average annual temperature at which gas flow is measured for each digester (results of Equation JJ–9).

(8) Average annual gas flow pressure at which gas flow is measured for each digester (results of Equation JJ–10).

(9) Destruction efficiency used for each digester.

(10) Number of days per year that each digester was operating.

(11) Collection efficiency used for each digester.

§ 98.367 Records that must be retained.

In addition to the information required by § 98.3(g), you must retain the calibration records for all monitoring equipment, including the method or manufacturer's specification used for calibration.

§ 98.368 Definitions.

All terms used in this subpart have the same meaning given in the Clean Air Act and subpart A of this part.

TABLE JJ–1 TO SUBPART JJ OF PART 98—ANIMAL POPULATION THRESHOLD LEVEL BELOW WHICH FACILITIES ARE NOT REQUIRED TO REPORT EMISSIONS UNDER SUBPART JJ [1,2]

Animal group	Average annual animal population (Head) [3]
Beef	29,300
Dairy	3,200
Swine	34,100
Poultry:	
Layers	723,600
Broilers	38,160,000

TABLE JJ–1 TO SUBPART JJ OF PART 98—ANIMAL POPULATION THRESHOLD LEVEL BELOW WHICH FACILITIES ARE NOT REQUIRED TO REPORT EMISSIONS UNDER SUBPART JJ [1,2]—Continued

Animal group	Average annual animal population (Head) [3]
Turkeys	7,710,000

[1] The threshold head populations in this table were calculated using the most conservative assumptions (high VS and N values, maximum ambient temperatures, and the application of an uncertainty factor) to ensure that facilities at or near the 25,000 metric ton CO_2e threshold level were not excluded from reporting.

[2] For facilities with more than one animal group present refer to § 98.360 (2) to estimate the combined animal group factor (CAGF), which is used to determine if a facility may be required to report.

[3] For all animal groups except dairy, the average annual animal population represents the total number of animals present at the facility. For dairy facilities, the average annual animal population represents the number of mature dairy cows present at the facility (note that heifers and calves were included in the emission estimates for dairy facilities using the assumption that the average annual animal population of heifers and calves at dairy facilities are equal to 30 percent of the mature dairy cow average annual animal population, therefore the average annual population for dairy facilities should not include heifers and calves, only dairy cows).

TABLE JJ–2 TO SUBPART JJ OF PART 98—WASTE CHARACTERISTICS DATA

Animal type	Typical animal mass (kg)	Volatile solids excretion rate (kg VS/day/1000 kg animal mass)	Nitrogen excretion rate (kg N/day/1000 kg animal mass)	Maximum methane generation potential, B_o (m^3 CH_4/kg VS added)
Dairy Cows	604	See Table JJ–3	See Table JJ–3	0.24
Dairy Heifers	476	See Table JJ–3	See Table JJ–3	0.17
Dairy Calves	118	6.41	0.30	0.17
Feedlot Steers	420	See Table JJ–3	See Table JJ–3	0.33
Feedlot heifers	420	See Table JJ–3	See Table JJ–3	0.33
Market Swine <60 lbs	16	8.80	0.60	0.48
Market Swine 60–119 lbs	41	5.40	0.42	0.48
Market Swine 120–179 lbs	68	5.40	0.42	0.48
Market Swine >180 lbs	91	5.40	0.42	0.48
Breeding Swine	198	2.60	0.24	0.48
Feedlot Sheep	25	9.20	0.42	0.36
Goats	64	9.50	0.45	0.17
Horses	450	10.00	0.30	0.33
Hens >/= 1 yr	1.8	10.09	0.83	0.39
Pullets	1.8	10.09	0.62	0.39
Other Chickens	1.8	10.80	0.83	0.39
Broilers	0.9	15.00	1.10	0.36
Turkeys	6.8	9.70	0.74	0.36

TABLE JJ–3 TO SUBPART JJ OF PART 98—STATE-SPECIFIC VOLATILE SOLIDS (VS) AND NITROGEN (N) EXCRETION RATES FOR CATTLE

State	Volatile solids excretion rate (kg VS/day/1000 kg animal mass)				Nitrogen excretion rate (kg VS/day/1000 kg animal mass)			
	Dairy cows	Dairy heifers	Feedlot steer	Feedlot heifers	Dairy cows	Dairy heifers	Feedlot steer	Feedlot heifers
Alabama	8.40	8.35	4.27	4.74	0.50	0.46	0.36	0.38
Alaska	7.30	8.35	4.15	4.58	0.45	0.46	0.35	0.37
Arizona	10.37	8.35	3.91	4.27	0.58	0.46	0.33	0.34
Arkansas	7.59	8.35	3.98	4.35	0.46	0.46	0.33	0.35
California	10.02	8.35	3.96	4.33	0.56	0.46	0.33	0.34
Colorado	10.25	8.35	3.97	4.34	0.58	0.46	0.33	0.35
Connecticut	9.22	8.35	4.41	4.93	0.53	0.46	0.37	0.40
Delaware	8.63	8.35	4.19	4.64	0.51	0.46	0.35	0.37
Florida	8.90	8.35	4.15	4.58	0.52	0.46	0.35	0.37
Georgia	9.07	8.35	4.18	4.63	0.53	0.46	0.35	0.37
Hawaii	7.00	8.35	4.15	4.58	0.44	0.46	0.35	0.37
Idaho	10.11	8.35	4.03	4.42	0.57	0.46	0.34	0.35
Illinois	9.07	8.35	4.15	4.59	0.52	0.46	0.35	0.37
Indiana	9.38	8.35	3.98	4.35	0.54	0.46	0.33	0.35
Iowa	9.46	8.35	3.93	4.28	0.54	0.46	0.33	0.34
Kansas	9.63	8.35	3.97	4.35	0.55	0.46	0.33	0.35
Kentucky	7.89	8.35	4.20	4.65	0.48	0.46	0.35	0.37

TABLE JJ–3 TO SUBPART JJ OF PART 98—STATE-SPECIFIC VOLATILE SOLIDS (VS) AND NITROGEN (N) EXCRETION RATES FOR CATTLE—Continued

State	Volatile solids excretion rate (kg VS/day/1000 kg animal mass)				Nitrogen excretion rate (kg VS/day/1000 kg animal mass)			
	Dairy cows	Dairy heifers	Feedlot steer	Feedlot heifers	Dairy cows	Dairy heifers	Feedlot steer	Feedlot heifers
Louisiana	7.39	8.35	4.07	4.48	0.45	0.46	0.34	0.36
Maine	8.99	8.35	4.07	4.47	0.52	0.46	0.34	0.36
Maryland	9.02	8.35	4.05	4.45	0.52	0.46	0.34	0.35
Massachusetts	8.63	8.35	4.15	4.58	0.51	0.46	0.35	0.37
Michigan	10.05	8.35	4.00	4.38	0.57	0.46	0.34	0.35
Minnesota	9.17	8.35	3.89	4.24	0.53	0.46	0.33	0.34
Mississippi	8.19	8.35	4.14	4.57	0.49	0.46	0.35	0.37
Missouri	8.02	8.35	4.08	4.49	0.48	0.46	0.34	0.36
Montana	9.03	8.35	4.23	4.69	0.52	0.46	0.36	0.38
Nebraska	9.09	8.35	3.98	4.35	0.53	0.46	0.33	0.35
Nevada	9.65	8.35	4.07	4.48	0.55	0.46	0.34	0.36
New Hampshire	9.44	8.35	3.94	4.30	0.54	0.46	0.33	0.34
New Jersey	8.51	8.35	3.98	4.36	0.50	0.46	0.33	0.35
New Mexico	10.34	8.35	3.88	4.22	0.58	0.46	0.32	0.33
New York	9.42	8.35	3.75	4.05	0.54	0.46	0.31	0.32
North Carolina	9.38	8.35	4.20	4.65	0.55	0.46	0.35	0.37
North Dakota	8.40	8.35	3.88	4.22	0.50	0.46	0.32	0.34
Ohio	9.01	8.35	3.96	4.33	0.52	0.46	0.33	0.34
Oklahoma	8.58	8.35	3.98	4.35	0.50	0.46	0.33	0.35
Oregon	9.40	8.35	4.06	4.46	0.54	0.46	0.34	0.36
Pennsylvania	9.26	8.35	3.98	4.35	0.53	0.46	0.33	0.35
Rhode Island	8.94	8.35	4.36	4.87	0.52	0.46	0.37	0.39
South Carolina	9.05	8.35	4.15	4.58	0.53	0.46	0.35	0.37
South Dakota	9.45	8.35	4.01	4.39	0.54	0.46	0.34	0.35
Tennessee	8.60	8.35	4.48	5.02	0.51	0.46	0.38	0.40
Texas	9.51	8.35	3.95	4.32	0.54	0.46	0.33	0.34
Utah	9.70	8.35	3.88	4.22	0.55	0.46	0.32	0.34
Vermont	9.03	8.35	4.10	4.52	0.52	0.46	0.34	0.36
Virginia	9.02	8.35	3.98	4.35	0.53	0.46	0.33	0.35
Washington	10.36	8.35	4.07	4.47	0.58	0.46	0.34	0.36
West Virginia	8.13	8.35	4.65	5.25	0.48	0.46	0.40	0.42
Wisconsin	9.34	8.35	3.95	4.31	0.54	0.46	0.33	0.34
Wyoming	9.29	8.35	4.17	4.61	0.53	0.46	0.35	0.37

TABLE JJ–4 TO SUBPART JJ OF PART 98—VOLATILE SOLIDS AND NITROGEN REMOVAL THROUGH SOLIDS SEPARATION

Type of solids separation	Volatile solids removal (decimal)	Nitrogen removal (decimal)
Gravity	0.60	0.60
Mechanical:		
Stationary Screen	0.20	0.10
Vibrating Screen	0.15	0.15
Screw Press	0.25	0.15
Centrifuge	0.50	0.25
Roller drum	0.25	0.15
Belt press/screen	0.50	0.30

Table JJ-5 to Subpart JJ of Part 98—Methane Conversion Factors

Manure Management System Component	MCFs by Average Annual Ambient Temperature (degrees C)																		
	Cool					Temperate											Warm		
	<10	11	12	13	14	15	16	17	18	19	20	21	22	23	24	25	26	27	>28
Uncovered Anaerobic Lagoon	66%	68%	70%	71%	73%	74%	75%	76%	77%	77%	78%	78%	78%	79%	79%	79%	79%	80%	80%
Liquid/slurry (with crust cover)	10%	11%	13%	14%	15%	17%	18%	20%	22%	24%	26%	29%	31%	34%	37%	41%	44%	48%	50%
Liquid/slurry (w/o crust cover)	17%	19%	20%	22%	25%	27%	29%	32%	35%	39%	42%	46%	50%	55%	60%	65%	71%	78%	80%
Storage pits <1 month	3.0%					3.0%											30.0%		
Storage pits >1 month	17%	19%	20%	22%	25%	27%	29%	32%	35%	39%	42%	46%	50%	55%	60%	65%	71%	78%	80%
Solid manure storage	2.0%					4.0%											5.0%		
Dry lots (including feedlots)	1.0%					1.5%											2.0%		
High-rise houses for poultry production (without litter)	1.5%					1.5%											1.5%		
Poultry production with litter	1.5%					1.5%											1.5%		
Deep bedding systems for cattle and swine(<1 month)	3.0%					3.0%											30.0%		
Deep bedding systems for cattle and swine (>1 month)	17%	19%	20%	22%	25%	27%	29%	32%	35%	39%	42%	46%	50%	55%	60%	65%	71%	78%	80%
Manure Composting - In Vessel	0.5%					0.5%											0.5%		
Manure Composting - Static Pile	0.5%					0.5%											0.5%		
Manure Composting- Extensive/ Passive	0.5%					1.0%											1.5%		
Manure Composting- Intensive	0.5%					1.0%											1.5%		
Aerobic Treatment	0.0%					0.0%											0.0%		

TABLE JJ–6 TO SUBPART JJ OF PART 98—COLLECTION EFFICIENCIES OF ANAEROBIC DIGESTERS

Anaerobic digester type	Cover type	Methane collection efficiency
Covered anaerobic lagoon (biogas capture)	Bank to bank, impermeable	0.975
	Modular, impermeable	0.70
Complete mix, fixed film, or plug flow digester	Enclosed Vessel	0.99

TABLE JJ–7 TO SUBPART JJ OF PART 98—NITROUS OXIDE EMISSION FACTORS (KG N_2O–N/KG KJDL N)

Manure management system component	N_2O emission factor
Uncovered anaerobic lagoon	0
Liquid/Slurry (with crust cover)	0.005
Liquid/Slurry (without crust cover)	0
Storage pits	0.002
Digesters	0
Solid manure storage	0.005
Dry lots (including feedlots)	0.02
High-rise house for poultry (poultry without litter)	0.001
Poultry production with litter	0.001
Deep bedding for cattle and swine (active mix)	0.07
Deep bedding for cattle and swine (no mix)	0.01
Manure Composting (in vessel)	0.006
Manure Composting (intensive)	0.1
Manure Composting (passive)	0.01
Manure Composting (static)	0.006
Aerobic Treatment (forced aeration)	0.005
Aerobic Treatment (natural aeration)	0.01

Subpart KK [Reserved]

Subpart LL—Suppliers of Coal-based Liquid Fuels

§ 98.380 Definition of the source category.

This source category consists of producers, importers, and exporters of products listed in Table MM–1 of subpart MM that are coal-based (coal-to-liquid products).

(a) A producer is the owner or operator of a coal-to-liquids facility. A coal-to-liquids facility is any facility engaged in converting coal into liquid products using a process involving conversion of coal into gas and then into liquids (e.g., Fischer-Tropsch) or conversion of coal directly into liquids (i.e., direct liquefaction).

(b) An importer or exporter shall have the same meaning given in § 98.6.

§ 98.381 Reporting threshold.

Any supplier of coal-to-liquid products who meets the requirements of § 98.2(a)(4) must report GHG emissions.

§ 98.382 GHGs To report.

You must report the CO_2 emissions that would result from the complete combustion or oxidation of fossil-fuel products (besides coal or crude oil) that you produce, use as feedstock, import, or export during the calendar year. Additionally, producers must report CO_2 emissions that would result from the complete combustion or oxidation of any biomass co-processed with fossil fuel-based feedstocks.

§ 98.383 Calculating GHG emissions.

You must follow the calculation methodologies of § 98.393 as if they applied to the appropriate coal-to-liquid product supplier (i.e., calculation methodologies for refiners apply to producers of coal-to-liquid products and calculation methodologies for importers and exporters of petroleum products apply to importers and exporters of coal-to-liquid products).

(a) In calculation methodologies in § 98.393 for petroleum products or petroleum-based products, suppliers of coal-to-liquid products shall also include coal-to-liquid products.

(b) In calculation methodologies in § 98.393 for non-crude feedstocks or non-crude petroleum feedstocks, producers of coal-to-liquid products shall also include coal-to-liquid products that enter the facility to be further processed or otherwise used on site.

(c) In calculation methodologies in § 98.393 for petroleum feedstocks, suppliers of coal-to-liquid products shall also include coal and coal-to-liquid products that enter the facility to be further processed or otherwise used on site.

§ 98.384 Monitoring and QA/QC requirements.

You must follow the monitoring and QA/QC requirements in § 98.394 as if they applied to the appropriate coal-to-liquid product supplier. Any monitoring and QA/QC requirement for petroleum products in § 98.394 also applies to coal-to-liquid products.

§ 98.385 Procedures for estimating missing data.

You must follow the procedures for estimating missing data in § 98.395 as if they applied to the appropriate coal-to-liquid product supplier. Any procedure for estimating missing data for petroleum products in § 98.395 also applies to coal-to-liquid products.

§ 98.386 Data reporting requirements.

In addition to the information required by § 98.3(c), the following requirements apply:

(a) Producers shall report the following information for each coal-to-liquid facility:

(1) For each product listed in Table MM–1 of subpart MM of this part that enters the coal-to-liquid facility to be further processed or otherwise used on site, report the annual quantity in metric tons or barrels by each quantity measurement standard method or other industry standard practice used. For natural gas liquids, quantity shall reflect the individual components of the product.

(2) For each product listed in Table MM–1 of subpart MM of this part that enters the coal-to-liquid facility to be further processed or otherwise used on site, report the total annual quantity in metric tons or barrels. For natural gas liquids, quantity shall reflect the individual components of the product.

(3) For each feedstock reported in paragraph (a)(2) that was produced by blending a fossil fuel-based product with a biomass-based product, report the percent of the volume reported in paragraph (a)(2) of this section that is fossil fuel-based.

(4) Each standard method or other industry standard practice used to measure each quantity reported in paragraph (a)(1) of this section.

(5) For each product (leaving the coal-to-liquid facility) listed in Table MM–1 of subpart MM of this part, report the annual quantity in metric tons or barrels by each quantity measurement standard method or other industry standard practice used. For natural gas liquids, quantity shall reflect the individual components of the product.

(6) For each product (leaving the coal-to-liquid facility) listed in Table MM–1 of subpart MM of this part, report the total annual quantity in metric tons or barrels. For natural gas liquids, quantity shall reflect the individual components of the product.

(7) For each product reported in paragraph (a)(6) of this section that was produced by blending a fossil fuel-based product with a biomass-based product, report the percent of the volume reported in paragraph (a)(6) of this section that is fossil fuel-based.

(8) Each standard method or other industry standard practice used to measure each quantity reported in paragraph (a)(5) of this section.

(9) For every feedstock reported in paragraph (a)(2) of this section for which Calculation Methodology 2 of subpart MM of this part was used to determine an emissions factor, report:

(i) The number of samples collected according to § 98.394(c).

(ii) The sampling standard method used.

(iii) The carbon share test results in percent mass.

(iv) The standard method used to test carbon share.

(v) The calculated CO_2 emissions factor.

(10) For every non-solid feedstock reported in paragraph (a)(2) of this section for which Calculation Methodology 2 of subpart MM of this part was used to determine an emissions factor, report:

(i) The density test results in metric tons per barrel.

(ii) The standard method used to test density.

(11) For every product reported in paragraph (a)(6) of this section for which Calculation Methodology 2 of this subpart was used to determine an emissions factor, report:

(i) The number of samples collected according to § 98.394(c).

(ii) The sampling standard method used.

(iii) The carbon share test results in percent mass.

(iv) The standard method used to test carbon share.

(v) The calculated CO_2 emissions factor.

(12) For every non-solid product reported in paragraph (a)(6) of this section for which Calculation Methodology 2 of subpart MM of this part was used to determine an emissions factor, report:

(i) The density test results in metric tons per barrel.

(ii) The standard method used to test density.

(13) For each specific type of biomass that enters the coal-to-liquid facility to be co-processed with fossil fuel-

based feedstock to produce a product reported in paragraph (a)(6) of this section, report the annual quantity in metric tons or barrels by each quantity measurement standard method or other industry standard practice used.

(14) For each specific type of biomass that enters the coal-to-liquid facility to be co-processed with fossil fuel-based feedstock to produce a product reported in paragraph (a)(6) of this section, report the total annual quantity in metric tons or barrels.

(15) Each standard method or other industry standard practice used to measure each quantity reported in paragraph (a)(3) of this section.

(16) The CO_2 emissions in metric tons that would result from the complete combustion or oxidation of each feedstock reported in paragraph (a)(2) of this section, calculated according to § 98.393(b) or (h).

(17) The CO_2 emissions in metric tons that would result from the complete combustion or oxidation of each product (leaving the coal-to-liquid facility) reported in paragraph (a)(6) of this section, calculated according to § 98.393(a) or (h).

(18) Annual CO_2 emissions in metric tons that would result from the complete combustion or oxidation of each type of biomass feedstock co-processed with fossil fuel-based feedstocks reported in paragraph (a)(3) of this section, calculated according to § 98.393(c).

(19) Annual CO_2 emissions that would result from the complete combustion or oxidation of all products, calculated according to § 98.393(d).

(20) Annual quantity of bulk NGLs in metric tons or barrels received for processing during the reporting year.

(b) In addition to the information required by § 98.3(c), each importer shall report all of the following information at the corporate level:

(1) For each product listed in Table MM–1 of subpart MM of this part, report the annual quantity in metric tons or barrels by each quantity measurement standard method or other industry standard practice used. For natural gas liquids, quantity shall reflect the individual components of the product.

(2) For each product listed in Table MM–1 of subpart MM of this part, report the total annual quantity in metric tons or barrels. For natural gas liquids, quantity shall reflect the individual components of the product as listed in Table MM–1 of subpart MM of this part.

(3) For each product reported in paragraph (b)(2) of this section that was produced by blending a fossil fuel-based product with a biomass-based product, report the percent of the volume reported in paragraph (b)(2) of this section that is fossil fuel-based.

(4) Each standard method or other industry standard practice used to measure each quantity reported in paragraph (b)(1) of this section.

(5) For each product reported in paragraph (b)(2) of this section for which Calculation Methodology 2 of this subpart used was used to determine an emissions factor, report:

(i) The number of samples collected according to § 98.394(c)

(ii) The sampling standard method used.

(iii) The carbon share test results in percent mass.

(iv) The standard method used to test carbon share.

(v) The calculated CO_2 emissions factor in metric tons.

(6) For each non-solid product reported in paragraph (b)(2) of this section for which Calculation Methodology 2 of this subpart was used to determine an emissions factor, report:

(i) The density test results in metric tons ber barrel.

(ii) The standard method used to test density.

(7) The CO_2 emissions in metric tons that would result from the complete combustion or oxidation of each imported product reported in paragraph (b)(2) of this section, calculated according to § 98.393(a).

(8) The total sum of CO_2 emissions that would result from the complete combustion or oxidation of all imported products, calculated according to § 98.393(e).

(c) In addition to the information required by § 98.3(c), each exporter shall report all of the following information at the corporate level:

(1) For each product listed in Table MM–1 of subpart MM of this part, report the annual quantity in metric

tons or barrels by each quantity measurement standard method or other industry standard practice used. For natural gas liquids, quantity shall reflect the individual components of the product.

(2) For each product listed in table MM–1 of subpart MM of this part, report the total annual quantity in metric tons or barrels. For natural gas liquids, quantity shall reflect the individual components of the product.

(3) For each product reported in paragraph (c)(2) of this section that was produced by blending a fossil fuel-based product with a biomass-based product, report the percent of the volume reported in paragraph (c)(2) of this section that is fossil fuel-based.

(4) Each standard method or other industry standard practice used to measure each quantity reported in paragraph (c)(1) of this section.

(5) For each product reported in paragraph (c)(2) of this section for which Calculation Methodology 2 of this subpart was used to determine an emissions factor, report:

(i) The number of samples collected according to § 98.394(c).

(ii) The sampling standard method used.

(iii) The carbon share test results in percent mass.

(iv) The standard method used to test carbon share.

(v) The calculated CO_2 emissions factor in metric tons.

(6) For each non-solid product reported in paragraph (c)(2) of this section for which Calculation Methodology 2 of this subpart used was used to determine an emissions factor, report:

(i) The density test results in metric tons per barrel.

(ii) The standard method used to test density.

(7) The CO_2 emissions in metric tons that would result from the complete combustion or oxidation of each exported product reported in paragraph (c)(2) of this section, calculated according to § 98.393(a).

(8) Total sum of CO_2 emissions that would result from the complete combustion or oxidation of all exported products, calculated according to § 98.393(e).

§ 98.387 Records that must be retained.

You must retain records according to the requirements in § 98.397 as if they applied to the appropriate coal-to-liquid product supplier (e.g., retaining copies of all reports submitted to EPA under § 98.386 and records to support information contained in those reports). Any records for petroleum products that are required to be retained in § 98.397 are also required for coal-to-liquid products.

§ 98.388 Definitions.

All terms used in this subpart have the same meaning given in the Clean Air Act and subpart A of this part.

Subpart MM—Suppliers of Petroleum Products

§ 98.390 Definition of the source category.

This source category consists of petroleum refineries and importers and exporters of petroleum products and natural gas liquids as listed in Table MM–1 of this subpart.

(a) A petroleum refinery for the purpose of this subpart is any facility engaged in producing petroleum products through the distillation of crude oil.

(b) A refiner is the owner or operator of a petroleum refinery.

(c) Importer has the same meaning given in § 98.6 and includes any entity that imports petroleum products or natural gas liquids as listed in Table MM–1 of this subpart. Any blender or refiner of refined or semi-refined petroleum products shall be considered an importer if it otherwise satisfies the aforementioned definition.

(d) Exporter has the same meaning given in § 98.6 and includes any entity that exports petroleum products or natural gas liquids as listed in Table MM–1 of this subpart. Any blender or refiner of refined or semi-refined petroleum products shall be considered an exporter if it otherwise satisfies the aforementioned definition.

§ 98.391 Reporting threshold.

Any supplier of petroleum products who meets the requirements of § 98.2(a)(4) must report GHG emissions.

§ 98.392 GHGs to report.

Suppliers of petroleum products must report the CO_2 emissions that would result from the complete combustion or oxidation of each petroleum product and natural gas liquid produced, used as feedstock, imported, or exported during the calendar year. Additionally, refiners must report CO_2 emissions that would result from the complete combustion or oxidation of any biomass co-processed with petroleum feedstocks.

§ 98.393 Calculating GHG emissions.

(a) Calculation for individual products produced, imported, or exported.

(1) Except as provided in paragraph (h) of this section, any refiner, importer, or exporter shall calculate CO_2 emissions from each individual petroleum product and natural gas liquid using Equation MM–1 of this section.

$$CO_{2i} = Product_i \star EF_i \qquad \text{(Eq. MM-1)}$$

Where:

CO_{2i} = Annual CO_2 emissions that would result from the complete combustion or oxidation of each petroleum product or natural gas liquid ''i'' (metric tons).

$Product_i$ = Annual volume of product ''i'' produced, imported, or exported by the reporting party (barrels). For refiners, this volume only includes products ex refinery gate. For natural gas liquids, volumes shall reflect the individual components of the product as listed in Table MM–1 of this subpart.

EF_i = Product-specific CO_2 emission factor (metric tons CO_2 per barrel).

(2) In the event that an individual petroleum product is produced as a solid rather than liquid any refiner, importer, or exporter shall calculate CO_2 emissions using Equation MM–1 of this section.

Where:

CO_{2i} = Annual CO_2 emissions that would result from the complete combustion or oxidation of each petroleum product ''i'' (metric tons).

$Product_i$ = Annual mass of product ''i'' produced, imported, or exported by the reporting party (metric tons). For refiners, this mass only includes products ex refinery gate.

EF_i = Product-specific CO_2 emission factor (metric tons CO_2 per metric ton of product).

(b) Calculation for individual products that enter a refinery as a non-crude feedstock.

(1) Except as provided in paragraph (h) of this section, any refiner shall calculate CO_2 emissions from each non-crude feedstock using Equation MM–2 of this section.

$$CO_{2j} = Feedstock_j \star EF_j \qquad \text{(Eq. MM-2)}$$

Where:

CO_{2j} = Annual CO_2 emissions that would result from the complete combustion or oxidation of each non-crude feedstock ''j'' (metric tons).

$Feedstock_j$ = Annual volume of a petroleum product or natural gas liquid ''j'' that enters the refinery to be further refined or otherwise used on site (barrels). For natural gas liquids, volumes shall reflect the individual components of the product as listed in table MM–1 of this subpart.

EF_j = Feedstock-specific CO_2 emission factor (metric tons CO_2 per barrel).

(2) In the event that a non-crude feedstock enters a refinery as a solid rather than liquid, the refiner shall calculate CO_2 emissions using Equation MM–2 of this section.

Where:

CO_{2j} = Annual CO_2 emissions that would result from the complete combustion or oxidation of each non-crude feedstock ''j'' (metric tons).

$Feedstock_j$ = Annual mass of a petroleum product ''j'' that enters the refinery to be further refined or otherwise used on site (metric tons).

EF_j = Feedstock-specific CO_2 emission factor (metric tons CO_2 per metric ton of feedstock).

(c) Calculation for biomass co-processed with petroleum feedstocks.

(1) Refiners shall calculate CO_2 emissions from each type of biomass that enters a refinery and is co-processed with petroleum feedstocks using Equation MM–3 of this section.

$$CO_{2m} = Biomass_m \star EF_m \qquad \text{(Eq. MM-3)}$$

Where:

CO_{2m} = Annual CO_2 emissions that would result from the complete combustion or oxidation of each type of biomass ''m'' (metric tons).

$Biomass_m$ = Annual volume of a specific type of biomass that enters the refinery and is co-processed with petroleum feedstocks to produce a petroleum product reported

under paragraph (a) of this section (barrels).

EF_m = Biomass-specific CO_2 emission factor (metric tons CO_2 per barrel).

(2) In the event that biomass enters a refinery as a solid rather than liquid and is co-processed with petroleum feedstocks, the refiner shall calculate CO_2 emissions from each type of biomass using Equation MM–3 of this section.

Where:

CO_{2m} = Annual CO_2 emissions that would result from the complete combustion or oxidation of each type of biomass ''m'' (metric tons).

$Biomass_m$ = Total annual mass of a specific type of biomass that enters the refinery to be co-processed with petroleum feedstocks to produce a petroleum product reported under paragraph (a) of this section (metric tons).

EF_m = Biomass-specific CO_2 emission factor (metric tons CO_2 per metric ton of biomass).

(d) *Summary calculation for refinery products.* Refiners shall calculate annual CO_2 emissions from all products using Equation MM–4 of this section.

$$CO_{2r} = \sum(CO_{2i}) - \sum(CO_{2j}) - \sum(CO_{2m}) \qquad \text{(Eq. MM-4)}$$

Where:

CO_{2r} = Annual CO_2 emissions that would result from the complete combustion or oxidation of all petroleum products and natural gas liquids (ex refinery gate) minus non-crude feedstocks and any biomass to be co-processed with petroleum feedstocks.

CO_{2i} = Annual CO_2 emissions that would result from the complete combustion or oxidation of each petroleum product or natural gas liquid ''i'' (metric tons).

CO_{2j} = Annual CO_2 emissions that would result from the complete combustion or oxidation of each non-crude feedstock ''j'' (metric tons).

CO_{2m} = Annual CO_2 emissions that would result from the complete combustion or oxidation of each type of biomass ''m'' (metric tons).

(e) *Summary calculation for importer and exporter products.* Importers and exporters shall calculate annual CO_2 emissions from all petroleum products and natural gas liquids imported or exported, respectively, using Equations MM–1 and MM–5 of this section.

$$CO_{2x} = \sum(CO_{2i}) \qquad \text{(Eq. MM-5)}$$

Where:

CO_{2i} = Annual CO_2 emissions that would result from the complete combustion or oxidation of each petroleum product or natural gas liquid ''i'' (metric tons).

CO_{2x} = Annual CO_2 emissions that would result from the complete combustion or oxidation of all petroleum products and natural gas liquids.

(f) *Emission factors for petroleum products and natural gas liquids.* The emission factor ($EF_{i,j}$) for each petroleum product and natural gas liquid shall be determined using either of the calculation methods described in paragraphs (f)(1) or (f)(2) of this section. The same calculation method must be used for the entire quantity of the product for the reporting year. For refiners, the quantity of a product that enters a refinery (i.e., a non-crude feedstock) is considered separate from the quantity of a product ex refinery gate.

(1) *Calculation Method 1.* For solid products, use the default carbon share factor (i.e., percent carbon by mass) in column B of Table MM–1 of this subpart for the appropriate product. For all other products, use the default CO_2 emission factor listed in column C of Table MM–1 of this subpart for the appropriate product.

(2) Calculation Method 2.

(i) For solid products, develop emission factors according to Equation MM–6 of this section using a value of 1 for density and direct measurements of carbon share according to methods set forth in § 98.394(c). For all other products, develop emission factors according to Equation MM–6 of this section using direct measurements of density and carbon share according to methods set forth in § 98.394(c).

$$EF_{i,j} = \text{Density} \star \text{Carbon Share} \star (44/12) \qquad \text{(Eq. MM-6)}$$

Where:

$EF_{i,j}$ = Emission factor of the petroleum product or natural gas liquid (metric tons CO_2 per barrel or per metric ton of product).

Density = Density of the petroleum product or natural gas liquid (metric tons per barrel for non-solid products, 1 for solid products).

Carbon share = Percent of total mass that carbon represents in the petroleum product or natural gas liquid, expressed as a fraction (e.g., 75% would be expressed as 0.75 in the above equation).

44/12 = Conversion factor for carbon to carbon dioxide.

(ii) If you use a standard method that involves gas chromatography to determine the percent mass of each component in a product, calculate the product's carbon share using Equation MM–7 of this section.

$$\text{Carbon Share} = \sum\left(\%\text{Composition}_{i...n} \star \%\text{Mass}_{i...n}\right) \qquad \text{(Eq. MM-7)}$$

Where:

Carbon Share = Percent of total mass that carbon represents in the petroleum product or natural gas liquid.

%Composition i* * *n = Percent of total mass that each molecular component in the petroleum product or natural gas liquid represents as determined by the procedures in the selected standard method.

$\%Mass_{i* * *n}$ = Percent of total mass that carbon represents in each molecular component of the petroleum product or natural gas liquid.

(g) *Emission factors for biomass co-processed with petroleum feedstocks.* Refiners shall use the most appropriate default CO_2 emission factor (EF_m) for biomass in Table MM–2 of this subpart to calculate CO_2 emissions in paragraph (c) of this section.

(h) *Special procedures for blended biomass-based fuels.* In the event that some portion of a petroleum product is biomass-based and was not derived by co-processing biomass and petroleum feedstocks together (i.e., the petroleum product was produced by blending a petroleum-based product with a biomass-based fuel), the reporting party shall calculate emissions for the petroleum product according to one of the methods in paragraphs (h)(1) through (h)(4) of this section, as appropriate.

(1) A reporter using Calculation Methodology 1 to determine the emission factor of a petroleum product shall calculate the CO_2 emissions associated with that product using Equation MM–8 of this section in place of Equation MM–1 of this section.

$$CO_{2i} = \text{Product}_i \star EF_i \star \%\text{Vol}_i \qquad \text{(Eq. MM-8)}$$

Where:

CO_{2i} = Annual CO_2 emissions that would result from the complete combustion or oxidation of each petroleum product ''i'' (metric tons).

Product_i = Annual volume of each petroleum product ''i'' produced, imported, or exported by the reporting party (barrels). For refiners, this volume only includes products ex refinery gate.

EF_i = Petroleum product-specific CO_2 emission factor (metric tons CO_2 per barrel) from Table MM–1 of this subpart.

$\%Vol_i$ = Percent volume of product ''i'' that is petroleum-based, including 2.5% of the volume of any ethanol product blended into a petroleum-based product to represent the denaturant in that ethanol product, expressed as a fraction (e.g., 75% would be expressed as 0.75 in the above equation).

(2) A refinery using Calculation Methodology 1 of this subpart to determine the emission factor of a non-crude petroleum feedstock shall calculate the CO_2 emissions associated with that feedstock using Equation MM–9 of this section in place of Equation MM–2 of this section.

$$CO_{2j} = Feedstock_j \star EF_i \star \%Vol_j \qquad \text{(Eq. MM-9)}$$

Where:

CO_{2j} = Annual CO_2 emissions that would result from the complete combustion or oxidation of each non-crude feedstock ''j'' (metric tons).

$Feedstock_j$ = Annual volume of each petroleum product ''j'' that enters the refinery as a feedstock to be further refined or otherwise used on site (barrels).

EF_j = Non-crude petroleum feedstock-specific CO_2 emission factor (metric tons CO_2 per barrel).

$\%Vol_j$ = Percent volume of feedstock ''j'' that is petroleum-based, including 2.5% of the volume of any ethanol product blended with the petroleum-based product to represent the denaturant in that ethanol product, expressed as a fraction (e.g., 75% would be expressed as 0.75 in the above equation).

(3) A reporter using Calculation Methodology 2 of this subpart to determine the emission factor of a petroleum product must calculate the CO_2 emissions associated with that product using Equation MM–10 of this section in place of Equation MM–1 of this section.

$$CO_{2i} = \left(Product_i \star EF_i\right) - \left(Product_i \star EF_m \star \%Vol_m\right) \qquad \text{(Eq. MM-10)}$$

Where:

CO_{2i} = Annual CO_2 emissions that would result from the complete combustion or oxidation of each product ''i'' (metric tons).

$Product_i$ = Annual volume of each petroleum product ''i'' produced, imported, or exported by the reporting party (barrels). For refiners, this volume only includes products ex refinery gate.

EF_i = Product-specific CO_2 emission factor (metric tons CO_2 per barrel).

EF_m = Default CO_2 emission factor from Table MM–2 of this subpart that most closely represents the component of product ''i'' that is biomass-based.

$\%Vol_m$ = Percent volume of petroleum product ''i'' that is biomass-based, not including 2.5% of the volume of any ethanol product blended with the petroleum-based product, which represents the denaturant in that ethanol product, expressed as a fraction (e.g., 75% would be expressed as 0.75 in the above equation).

(4) A refiner using Calculation Methodology 2 of this subpart to determine the emission factor of a non-crude petroleum feedstock must calculate the CO_2 emissions associated with that feedstock using Equation MM–11 of this section in place of Equation MM–2 of this section.

$$CO_{2j} = \left(Feedstock_j \star EF_j\right) - \left(Feedstock_i \star EF_m \star \%Vol_m\right) \qquad \text{(Eq. MM-11)}$$

Where:

CO_{2j} = Annual CO_2 emissions that would result from the complete combustion or oxidation of each non-crude feedstock ''j'' (metric tons).

$Feedstock_j$ = Annual volume of each petroleum product ''j'' that enters the refinery to be further refined or otherwise used on site (barrels).

EF_j = Feedstock-specific CO_2 emission factor (metric tons CO_2 per barrel).

EF_m = Default CO_2 emission factor from Table MM–2 of this subpart that most

closely represents the component of petroleum product ''j'' that is biomass-based.

$\%Vol_m$ = Percent volume of non-crude feedstock ''j'' that is biomass-based, not including 2.5% of the volume of any ethanol product blended with the petroleum-based product, which represents the denaturant in that ethanol product, expressed as a fraction (e.g., 75% would be expressed as 0.75 in the above equation).

§ 98.394 Monitoring and QA/QC requirements.

(a) *Determination of quantity.* (1) The quantity of petroleum products, natural gas liquids, biomass, and crude oil shall be determined as follows:

(i) Where an appropriate standard method published by a consensus-based standards organization exists, such a method shall be used. Consensus-based standards organizations include, but are not limited to, the following: ASTM International, the American National Standards Institute (ANSI), the American Gas Association (AGA), the American Society of Mechanical Engineers (ASME), the American Petroleum Institute (API), and the North American Energy Standards Board (NAESB).

(ii) Where no appropriate standard method developed by a consensus-based standards organization exists, industry standard practices shall be followed.

(iii) For products that are liquid at 60 degrees Fahrenheit and one standard atmosphere, all measurements of quantity shall be temperature-adjusted and pressure-adjusted to these conditions. For all other products, reporters shall use appropriate standard conditions specified in the standard method; if temperature and pressure conditions are not specified in the standard method or if a reporter uses an industry standard practice to determine quantity, the reporter shall use appropriate standard conditions according to established industry practices.

(2) All measurement equipment (including, but not limited to, flow meters and tank gauges) used for compliance with this subpart shall be appropriate for the standard method or industry standard practice followed under paragraph (a)(1)(i) or (a)(1)(ii) of this section.

(b) *Equipment calibration.* (1) All measurement equipment shall be calibrated prior to its first use for reporting under this subpart, using an appropriate standard method published by a consensus based standards organization or according to the equipment manufacturer's directions.

(2) Measurement equipment shall be recalibrated at the minimum frequency specified by the standard method used or by the equipment manufacturer's directions.

(c) *Procedures for Calculation Methodology 2 of this subpart.* (1) Reporting parties shall collect one sample of each petroleum product or natural gas liquid on any day of each calendar month of the reporting year in which the quantity of that product was measured in accordance with the requirements of this subpart. For example, if a given product was measured as entering the refinery continuously throughout the reporting year, twelve samples of that product shall be collected over the reporting year, one on any day of each calendar month of that year. If a given product was only measured from April 15 through June 10 of the reporting year, a refiner would collect three samples during that year, one during each of the calendar months of April, May and June on a day when the product was measured as either entering or exiting the refinery. Each sample shall be collected using an appropriate standard method published by a consensus-based standards organization.

(2) Mixing and handling of samples shall be performed using an appropriate standard method published by a consensus-based standards organization.

(3) *Density measurement.* (i) For all products that are not solid, reporters shall test for density using an appropriate standard method published by a consensus-based standards organization.

(ii) The density value for a given petroleum product shall be generated by either making a physical composite of all of the samples collected for the reporting year and testing that single sample or by measuring the individual samples throughout the year and defining the representative density value for the sample set by numerical means, i.e., a mathematical composite. If a

physical composite is chosen as the option to obtain the density value, the reporter shall submit each of the individual samples collected during the reporting year to the laboratory responsible for generating the composite sample.

(iii) For physical composites, the reporter shall handle the individual samples and the laboratory shall mix them in accordance with an appropriate standard method published by a consensus-based standards organization.

(iv) All measurements of density shall be temperature-adjusted and pressure-adjusted to the conditions assumed for determining the quantities of the product reported under this subpart.

(4) *Carbon share measurement*. (i) Reporters shall test for carbon share using an appropriate standard method published by a consensus-based standards organization.

(ii) If a standard method that involves gas chromatography is used to determine the percent mass of each component in a product, the molecular formula for each component shall be obtained from the information provided in the standard method and the atomic mass of each element in a given molecular component shall be obtained from the periodic table of the elements.

(iii) The carbon share value for a given petroleum product shall be generated by either making a physical composite of all of the samples collected for the reporting year and testing that single sample or by measuring the individual samples throughout the year and defining the representative carbon share value for the sample set by numerical means, i.e., a mathematical composite. If a physical composite is chosen as the option to obtain the carbon share value, the reporter shall submit each of the individual samples collected during the reporting year to the laboratory responsible for generating the composite sample.

(iv) For physical composites, the reporter shall handle the individual samples and the laboratory shall mix them in accordance with an appropriate standard method published by a consensus-based standards organization.

(d) *Measurement of API gravity and sulfur content of crude oil*. (1) Samples of each batch of crude oil shall be taken according to an appropriate standard method published by a consensus-based standards organization.

(2) Samples shall be handled according to an appropriate standard method published by a consensus-based standards organization.

(3) API gravity shall be measured using an appropriate standard method published by a consensus-based standards organization.

(4) Sulfur content shall be measured using an appropriate standard method published by a consensus-based standards organization.

(5) All measurements shall be temperature-adjusted and pressure-adjusted to the conditions assumed for determining the quantities of crude oil reported under this subpart.

§ 98.395 Procedures for estimating missing data.

(a) *Determination of quantity*. Whenever the quality assurance procedures in § 98.394(a) cannot be followed to measure the quantity of one or more petroleum products, natural gas liquids, types of biomass, feedstocks, or crude oil batches during any period (e.g., if a meter malfunctions), the following missing data procedures shall be used:

(1) For quantities of a product that are purchased or sold, a period of missing data shall be substituted using a reporter's established procedures for billing purposes in that period as agreed to by the party selling or purchasing the product.

(2) For quantities of a product that are not purchased or sold but of which the custody is transferred, a period of missing data shall be substituted using a reporter's established procedures for tracking purposes in that period as agreed to by the party involved in custody transfer of the product.

(b) *Determination of emission factor*. Whenever any of the procedures in § 98.394(c) cannot be followed to develop an emission factor for any reason, Calculation Methodology 1 of this subpart must be used in place of Calculation Methodology 2 of this subpart for the entire reporting year.

(c) *Determination of API gravity and sulfur content of crude oil.* For missing data on sulfur content or API gravity, the substitute data value shall be the arithmetic average of the quality-assured values of API gravity or sulfur content in the batch preceding and the batch immediately following the missing data incident. If no quality-assured data are available prior to the missing data incident, the substitute data value shall be the first quality-assured values for API gravity and sulfur content obtained from the batch after the missing data period.

§ 98.396 Data reporting requirements.

In addition to the information required by § 98.3(c), the following requirements apply:

(a) Refiners shall report the following information for each facility:

(1) For each petroleum product or natural gas liquid listed in table MM–1 of this subpart that enters the refinery to be further refined or otherwise used on site, report the annual quantity in metric tons or barrels by each quantity measurement standard method or other industry standard practice used. For natural gas liquids, quantity shall reflect the individual components of the product.

(2) For each petroleum product or natural gas liquid listed in Table MM–1 of this subpart that enters the refinery to be further refined or otherwise used on site, report the annual quantity in metric tons or barrels. For natural gas liquids, quantity shall reflect the individual components of the product.

(3) For each feedstock reported in paragraph (a)(2) of this section that was produced by blending a petroleum-based product with a biomass-based product, report the percent of the volume reported in paragraph (a)(2) of this section that is petroleum-based.

(4) Each standard method or other industry standard practice used to measure each quantity reported in paragraph (a)(1) of this section.

(5) For each petroleum product and natural gas liquid (ex refinery gate) listed in Table MM–1 of this subpart, report the annual quantity in metric tons or barrels by each quantity measurement standard method or other industry standard practice used. For natural gas liquids, quantity shall reflect the individual components of the product.

(6) For each petroleum product and natural gas liquid (ex refinery gate) listed in Table MM–1 of this subpart, report the annual quantity in metric tons or barrels. For natural gas liquids, quantity shall reflect the individual components of the product.

(7) For each product reported in paragraph (a)(6) of this section that was produced by blending a petroleum-based product with a biomass-based product, report the percent of the volume reported in paragraph (a)(6) of this section that is petroleum-based.

(8) Each standard method or other industry standard practice used to measure each quantity reported in paragraph (a)(5) of this section.

(9) For every feedstock reported in paragraph (a)(2) of this section for which Calculation Methodology 2 of this subpart was used to determine an emissions factor, report:

(i) The number of samples collected according to § 98.394(c)

(ii) The sampling standard method used.

(iii) The carbon share test results in percentmass.

(iv) The standard method used to test carbon share.

(v) The calculated CO_2 emissions factor in metric tons.

(10) For every non-solid feedstock reported in paragraph (a)(2) of this section for which Calculation Methodology 2 of this subpart was used to determine an emissions factor, report:

(i) The density test results in metric tons per barrel.

(ii) The standard method used to test density.

(11) For every petroleum product and natural gas liquid reported in paragraph (a)(6) of this section for which Calculation Methodology 2 of this subpart was used to determine an emissions factor, report:

(i) The number of samples collected according to § 98.394(c).

(ii) The sampling standard method used.

(iii) The carbon share test results in percentmass.

(iv) The standard method used to test carbon share.

(v) The calculated CO_2 emissions factor in metric tons CO_2 per barrel or per metric ton of product.

(12) For every non-solid petroleum product and natural gas liquid reported in paragraph (a)(6) for which Calculation Method 2 was used to determine an emissions factor, report:

(i) The density test results in metric tons per barrel.

(ii) The standard method used to test density.

(13) For each specific type of biomass that enters the refinery to be co-processed with petroleum feedstocks to produce a petroleum product reported in paragraph (a)(6) of this section, report the annual quantity in metric tons or barrels by each quantity measurement standard method or other industry standard practice used.

(14) For each specific type of biomass that enters the refinery to be co-processed with petroleum feedstocks to produce a petroleum product reported in paragraph (a)(6) of this section, report the annual quantity in metric tons or barrels.

(15) Each standard method or other industry standard practice used to measure each quantity reported in paragraph (a)(13) of this section.

(16) The CO_2 emissions in metric tons that would result from the complete combustion or oxidation of each petroleum product and natural gas liquid (ex refinery gate) reported in paragraph (a)(6) of this section, calculated according to § 98.393(a) or (h).

(17) The CO_2 emissions in metric tons that would result from the complete combustion or oxidation of each feedstock reported in paragraph (a)(2) of this section, calculated according to § 98.393(b) or (h).

(18) The CO_2 emissions in metric tons that would result from the complete combustion or oxidation of each type of biomass feedstock co-processed with petroleum feedstocks reported in paragraph (a)(13) of this section, calculated according to § 98.393(c).

(19) The sum of CO_2 emissions that would result from the complete combustion or oxidation of all products, calculated according to § 98.393(d).

(20) All of the following information for all crude oil feedstocks used at the refinery:

(i) Batch volume in barrels.

(ii) API gravity of the batch at the point of entry at the refinery.

(iii) Sulfur content of the batch at the point of entry at the refinery.

(iv) Country of origin of the batch, if known.

(21) The quantity of bulk NGLs in metric tons or barrels received for processing during the reporting year.

(b) In addition to the information required by § 98.3(c), each importer shall report all of the following information at the corporate level:

(1) For each petroleum product and natural gas liquid listed in Table MM–1 of this subpart, report the annual quantity in metric tons or barrels by each quantity measurement standard method or other industry standard practice used. For natural gas liquids, quantity shall reflect the individual components of the product.

(2) For each petroleum product and natural gas liquid listed in Table MM–1 of this subpart, report the annual quantity in metric tons or barrels. For natural gas liquids, quantity shall reflect the individual components of the product as listed in Table MM–1 of this subpart.

(3) For each product reported in paragraph (b)(2) of this section that was produced by blending a petroleum-based product with a biomass-based product, report the percent of the volume reported in paragraph (b)(2) of this section that is petroleum-based.

(4) Each standard method or other industry standard practice used to measure each quantity reported in paragraph (b)(1) of this section.

(5) For each product reported in paragraph (b)(2) of this section for which Calculation Methodology 2 of this subpart used was used to determine an emissions factor, report:

(i) The number of samples collected according to § 98.394(c).

(ii) The sampling standard method used.

(iii) The carbon share test results in percent mass.

(iv) The standard method used to test carbon share.

(v) The calculated CO_2 emissions factor in metric tons CO_2 per barrel or per metric ton of product.

(6) For each non-solid product reported in paragraph (b)(2) of this section for which Calculation Methodology 2 of this subpart was used to determine an emissions factor, report:

(i) The density test results in metric tons per barrel.

(ii) The standard method used to test density.

(7) The CO_2 emissions in metric tons that would result from the complete combustion or oxidation of each imported petroleum product and natural gas liquid reported in paragraph (b)(2) of this section, calculated according to § 98.393(a).

(8) The sum of CO_2 emissions that would result from the complete combustion oxidation of all imported products, calculated according to § 98.393(e).

(c) In addition to the information required by § 98.3(c), each exporter shall report all of the following information at the corporate level:

(1) For each petroleum product and natural gas liquid listed in Table MM–1 of this subpart, report the annual quantity in metric tons or barrels by each quantity measurement standard method or other industry standard practice used. For natural gas liquids, quantity shall reflect the individual components of the product.

(2) For each petroleum product and natural gas liquid listed in Table MM–1 of this subpart, report the annual quantity in metric tons or barrels. For natural gas liquids, quantity shall reflect the individual components of the product.

(3) For each product reported in paragraph (c)(2) of this section that was produced by blending a petroleum-based product with a biomass-based product, report the percent of the volume reported in paragraph (c)(2) of this section that is petroleum based.

(4) Each standard method or other industry standard practice used to measure each quantity reported in paragraph (c)(1) of this section.

(5) For each product reported in paragraph (c)(2) of this section for which Calculation Methodology 2 of this subpart was used to determine an emissions factor, report:

(i) The number of samples collected according to § 98.394(c).

(ii) The sampling standard method used.

(iii) The carbon share test results in percentmass.

(iv) The standard method used to test carbon share.

(v) The calculated CO_2 emissions factor in metric tons CO_2 per barrel or per metric ton of product.

(6) For each non-solid product reported in paragraph (c)(2) of this section for which Calculation Methodology 2 of this subpart used was used to determine an emissions factor, report:

(i) The density test results in metric tons per barrel.

(ii) The standard method used to test density.

(7) The CO_2 emissions in metric tons that would result from the complete combustion or oxidation of for each exported petroleum product and natural gas liquid reported in paragraph (c)(2) of this section, calculated according to § 98.393(a).

(8) The sum of CO_2 emissions that would result from the complete combustion or oxidation of all exported products, calculated according to § 98.393(e).

§ 98.397 Records that must be retained.

(a) All reporters shall retain copies of all reports submitted to EPA under § 98.396. In addition, all reporters shall maintain sufficient records to support information contained in those reports, including but not limited to information on the characteristics of their feedstocks and products.

(b) Reporters shall maintain records to support quantities that are reported under this subpart, including records documenting any estimations of missing data and the number of calendar days in the reporting year for which substitute data procedures were followed. For all quantities of petroleum products, natural gas liquids, biomass, and feedstocks, reporters shall maintain metering, guaging, and other records normally maintained in the course of business to document product and feedstock flows including the date of initial calibration and the frequency

of recalibration for the measurement equipment used

(c) Reporters shall retain laboratory reports, calculations and worksheets used to estimate the CO_2 emissions of the quantities of petroleum products, natural gas liquids, biomass, and feedstocks reported under this subpart.

(d) Reporters shall maintain laboratory reports, calculations and worksheets used in the measurement of density and carbon share for any petroleum product or natural gas liquid for which CO_2 emissions were calculated using Calculation Methodology 2.

(e) Reporters shall maintain laboratory reports, calculations and worksheets used in the measurement of API gravity and sulfur content for every crude oil batch reported under this subpart.

(f) Estimates of missing data shall be documented and records maintained showing the calculations.

(g) Reporters described in this subpart shall also retain all records described in § 98.3(g).

§ 98.398 Definitions.

All terms used in this subpart have the same meaning given in the Clean Air Act and subpart A of this part.

TABLE MM–1 TO SUBPART MM OF PART 98—DEFAULT FACTORS FOR PETROLEUM PRODUCTS AND NATURAL GAS LIQUIDS [1 2]

Products	Column A: density (metric tons/bbl)	Column B: carbon share (% of mass)	Column C: emission factor (metric tons CO_2/bbl)
Finished Motor Gasoline			
Conventional—Summer			
Regular	0.1181	86.66	0.3753
Midgrade	0.1183	86.63	0.3758
Premium	0.1185	86.61	0.3763
Conventional—Winter			
Regular	0.1155	86.50	0.3663
Midgrade	0.1161	86.55	0.3684
Premium	0.1167	86.59	0.3705
Reformulated—Summer			
Regular	0.1167	86.13	0.3686
Midgrade	0.1165	86.07	0.3677
Premium	0.1164	86.00	0.3670
Reformulated—Winter			
Regular	0.1165	86.05	0.3676
Midgrade	0.1165	86.06	0.3676
Premium	0.1166	86.06	0.3679
Gasoline—Other	0.1185	86.61	0.3763
Blendstocks			
CBOB—Summer			
Regular	0.1181	86.66	0.3753
Midgrade	0.1183	86.63	0.3758
Premium	0.1185	86.61	0.3763
CBOB—Winter			
Regular	0.1155	86.50	0.3663
Midgrade	0.1161	86.55	0.3684
Premium	0.1167	86.59	0.3705
RBOB—Summer			
Regular	0.1167	86.13	0.3686
Midgrade	0.1165	86.07	0.3677
Premium	0.1164	86.00	0.3670
RBOB—Winter			
Regular	0.1165	86.05	0.3676
Midgrade	0.1165	86.06	0.3676
Premium	0.1166	86.06	0.3679
Blendstocks—Other	0.1185	86.61	0.3763
Oxygenates			
Methanol	0.1268	37.48	0.1743

TABLE MM–1 TO SUBPART MM OF PART 98—DEFAULT FACTORS FOR PETROLEUM PRODUCTS AND NATURAL GAS LIQUIDS [1] [2]—Continued

Products	Column A: density (metric tons/bbl)	Column B: carbon share (% of mass)	Column C: emission factor (metric tons CO_2/bbl)
GTBA	0.1257	64.82	0.2988
MTBE	0.1181	68.13	0.2950
ETBE	0.1182	70.53	0.3057
TAME	0.1229	70.53	0.3178
DIPE	0.1156	70.53	0.2990
Distillate Fuel Oil			
Distillate No. 1			
Ultra Low Sulfur	0.1346	86.40	0.4264
Low Sulfur	0.1346	86.40	0.4264
High Sulfur	0.1346	86.40	0.4264
Distillate No. 2			
Ultra Low Sulfur	0.1342	87.30	0.4296
Low Sulfur	0.1342	87.30	0.4296
High Sulfur	0.1342	87.30	0.4296
Distillate Fuel Oil No. 4	0.1452	86.47	0.4604
Residual Fuel Oil No. 5 (Navy Special)	0.1365	85.67	0.4288
Residual Fuel Oil No. 6 (a.k.a. Bunker C)	0.1528	84.67	0.4744
Kerosene-Type Jet Fuel	0.1294	86.30	0.4095
Kerosene	0.1346	86.40	0.4264
Diesel—Other	0.1452	86.47	0.4604
Petrochemical Feedstocks			
Naphthas (< 401 °F)	0.1158	84.11	0.3571
Other Oils (> 401 °F)	0.1390	87.30	0.4450
Unfinished Oils			
Heavy Gas Oils	0.1476	85.80	0.4643
Residuum	0.1622	85.70	0.5097
Other Petroleum Products and Natural Gas Liquids			
Aviation Gasoline	0.1120	85.00	0.3490
Special Naphthas	0.1222	84.76	0.3798
Lubricants	0.1428	85.80	0.4492
Waxes	0.1285	85.30	0.4019
Petroleum Coke	0.1818	92.28	0.6151
Asphalt and Road Oil	0.1634	83.47	0.5001
Still Gas	0.1405	77.70	0.4003
Ethane	0.0866	79.89	0.2537
Ethylene	0.0903	85.63	0.2835
Propane	0.0784	81.71	0.2349
Propylene	0.0803	85.63	0.2521
Butane	0.0911	82.66	0.2761
Butylene	0.0935	85.63	0.2936
Isobutane	0.0876	82.66	0.2655
Isobutylene	0.0936	85.63	0.2939
Pentanes Plus	0.1055	83.63	0.3235
Miscellaneous Products	0.1380	85.49	0.4326

[1] In the case of products blended with some portion of biomass-based fuel, the carbon share in Table MM–1 of this subpart represents only the petroleum-based components.

[2] Products that are derived entirely from biomass should not be reported, but products that were derived from both biomass and a petroleum product (i.e., co-processed) should be reported as the petroleum product that it most closely represents.

TABLE MM–2 TO SUBPART MM OF PART 98—DEFAULT FACTORS FOR BIOMASS-BASED FUELS AND BIOMASS

Biomass-based fuel and biomass	Column A: Density (metric tons/bbl)	Column B: Carbon share (% of mass)	Column C: Emission factor (metric tons CO_2/bbl)
Ethanol (100%)	0.1267	52.14	0.2422
Biodiesel (100%, methyl ester)	0.1396	77.30	0.3957
Rendered Animal Fat	0.1333	76.19	0.3724
Vegetable Oil	0.1460	76.77	0.4110

Subpart NN—Suppliers of Natural Gas and Natural Gas Liquids

§ 98.400 Definition of the source category.

This supplier category consists of natural gas liquids fractionators and local natural gas distribution companies.

(a) Natural gas liquids fractionators are installations that fractionate natural gas liquids (NGLs) into their consitutent liquid products (ethane, propane, normal butane, isobutane or pentanes plus) for supply to downstream facilities.

(b) Local Distribution Companies (LDCs) are companies that own or operate distribution pipelines, not interstate pipelines or intrastate pipelines, that physically deliver natural gas to end users and that are regulated as separate operating companies by State public utility commissions or that operate as independent municipally-owned distribution systems.

(c) This supply category does not consist of the following facilities:

(1) Field gathering and boosting stations.

(2) Natural gas processing plants that separate NGLs from natural gas and produce bulk or y-grade NGLs but do not fractionate these NGLs into their constituent products.

(3) Facilities that meet the definition of refineries and report under subpart MM of this part.

(4) Facilities that meet the definition of petrochemical plants and report under subpart X of this part.

§ 98.401 Reporting threshold.

Any supplier of natural gas and natural gas liquids that meets the requirements of § 98.2(a)(4) must report GHG emissions.

§ 98.402 GHGs to report.

(a) NGL fractionators must report the CO_2 emissions that would result from the complete combustion or oxidation of the annual quantity of ethane, propane, normal butane, isobutane, and pentanes plus that is produced and sold or delivered to others.

(b) LDCs must report the CO_2 emissions that would result from the complete combustion or oxidation of the annual volumes of natural gas provided to end-users on their distribution systems.

§ 98.403 Calculating GHG emissions.

(a) LDCs and fractionators shall, for each individual product reported under this part, calculate the estimated CO_2 emissions that would result from the complete combustion or oxidation of the products supplied using either of Calculation Methodology 1 or 2 of this subpart:

(1) *Calculation Methodology 1.* NGL fractionators shall estimate CO_2 emissions that would result from the complete combustion or oxidation of the product(s) supplied using Equation NN–1 of this section. LDCs shall estimate CO_2 emissions that would result from the complete combustion or oxidation of the product received at the city gate using Equation NN–1. For each product, use the default value for higher heating value and CO_2 emission factor in Table NN–1 of this subpart. Alternatively, for each product, a reporter-specific higher heating value and CO_2 emission factor may be used, in place of one or both defaults provided they are developed using methods outlined

in §98.404. For each product, you must use the same volume unit throughout the equation.

$$CO_{2i} = 1 \text{ x } 10^{-3} \star \sum Fuel_h \star HHV_h \star EF_h \qquad \text{(Eq. NN-1)}$$

Where:

CO_{2i} = Annual CO_2 mass emissions that would result from the combustion or oxidation of each product ''h'' for redelivery to all recipients (metric tons).

Fuel = Total annual volume of product ''h'' supplied (volume per year, in Mscf for natural gas and bbl for NGLs).

HHV = Higher heating value of product ''h'' supplied (MMBtu/Mscf or MMBtu/bbl).

EF_h = CO_2 emission factor of product ''h'' (kg CO_2/MMBtu).

1 x 10^{-3} = Conversion factor from kilograms to metric tons (MT/kg).

(2) *Calculation Methodology 2.* NGL fractionators shall estimate CO_2 emissions that would result from the complete combustion or oxidation of the product(s) supplied using Equation NN–2 of this section. LDCs shall estimate CO_2 emissions that would result from the complete combustion or oxidation of the product received at the city gate using Equation NN–2. For each product, use the default CO_2 emission factor found in Table NN–2 of this subpart. Alternatively, for each product, a reporter-specific CO_2 emission factor may be used in place of the default factor, provided it is developed using methods outlined in §98.404. For each product, you must use the same volume unit throughout the equation.

$$CO_{2i} = \sum_h Fuel_h * EF_h \qquad \text{(Eq. NN-2)}$$

Where:

CO_{2i} = Annual CO_2 mass emissions that would result from the combustion or oxidation of each product ''h'' (metric tons)

Fuel = Total annual volume of product ''h'' supplied (bbl or Mscf per year)

EF_h = CO_2 emission factor of product ''h'' (MT CO_2/bbl, or MT CO_2/Mscf)

(b) Each LDC shall follow the procedures below.

(1) For natural gas that is received for redelivery to downstream gas transmission pipelines and other local distribution companies, use eEquation NN–3 of this section and the default values for the CO_2 emission factors found in Table NN–2 of this subpart. Alternatively, reporter-specific CO_2 emission factors may be used, provided they are developed using methods outlined in §98.404.

$$CO_{2j} = Fuel \star EF \qquad \text{(Eq. NN-3)}$$

Where:

CO_{2j} = Annual CO_2 mass emissions that would result from the combustion or oxidation of natural gas for redelivery to transmission pipelines or other LDCs (metric tons).

Fuel = Total annual volume of natural gas supplied (Mscf per year).

EF = Fuel-specific CO_2 emission factor (MT CO_2/Mscf).

(2)(i) For natural gas delivered to each meter registering a supply equal to or greater than 460,000 Mscf per year, use Equation NN–4 of this section and the default values for the CO_2 emission factors found in Table NN–2 of this subpart.

(ii) Alternatively, reporter-specific CO_2 emission factors may be used, provided they are developed using methods outlined in §98.404.

$$CO_{2k} = Fuel \star EF \qquad \text{(Eq. NN-4)}$$

Where:

CO_{2k} = Annual CO_2 mass emissions that would result from the combustion or oxidation of natural gas received by end-users that receive a supply equal to or greater than 460,000 Mscf per year (metric tons).

Fuel = Total annual volume of natural gas supplied (Mscf per year).

EF = Fuel-specific CO_2 emission factor (MT CO_2/Mscf).

(3) For natural gas received by the LDC at the city gate that is injected into on-system storage, and/or liquefied and stored, use Equation NN–5 of this section and the default value for the CO_2 emission factors found in Table NN–2 of this subpart. Alternatively, a

reporter-specific CO_2 emission factor may be used, provided it is developed using methods outlined in § 98.404.

$$CO_{2l} = [Fuel_1 - Fuel_2] \star EF \qquad \text{(Eq. NN-5)}$$

Where:

CO_{2l} = Annual CO_2 mass emissions that would result from the combustion or oxidation of the net natural gas that is liquefied and/or stored and not used for deliveries by the LDC within the reported year (metric tons).

$Fuel_1$ = Total annual volume of natural gas received by the LDC at the city gate and stored on-system or liquefied and stored in the reportng year (Mscf per year).

$Fuel_2$ = Total annual volume of natural gas that is used for deliveries in the reporting year that was not otherwise accounted for in Equation NN–1 or NN–2 of this section (Mscf per year). This primarily includes natural gas previously stored on-system or liquefied and stored that is removed from storage and used for deliveries to customers or other LDCs by the LDC within the reporting year. This also includes natural gas that bypassed the city gate and was delivered directly to LDC systems from producers or natural gas processing plants from local production.

EF = Fuel-specific CO_2 emission factor (MT CO_2/Mscf).

(4) Calculate the total CO_2 emissions that would result from the complete combustion or oxidation of the annual supply of natural gas to end-users using Equation NN–6 of this section.

$$CO_2 = \sum CO_{2i} - \sum CO_{2j} - \sum CO_{2k} - \sum CO_{2l} \qquad \text{(Eq. NN-6)}$$

Where:

CO_2 = Annual CO_2 mass emissions that would result from the combustion or oxidation of natural gas delivered to LDC customers not covered in paragraph (b)(2) of this section (metric tons).

CO_{2i} = Annual CO_2 mass emissions that would result from the combustion or oxidation of natural gas received at the city gate as calculated in paragraph (a)(1) or (a)(2) of this section (metric tons).

CO_{2j} = Annual CO_2 mass emissions that would result from the combustion or oxidation of natural gas delivered to transmission pipelines or other LDCs as calculated in paragraph (b)(1) of this section (metric tons).

CO_{2k} = Annual CO_2 mass emissions that would result from the combustion or oxidation of natural gas received by end-users that receive a supply equal to or greater than 460,000 Mscf per year as calculated in paragraph (b)(2) of this section (metric tons).

CO_{2l} = Annual CO_2 mass emissions that would result from the combustion or oxidation of natural gas received by the LDC and liquefied and/or stored but not used for deliveries within the reported year as calculated in paragraph (b)(3) of this section (metric tons).

(c) Each NGL fractionator shall follow the following procedures.

(1)(i) For fractionated NGLs received by the reporter from other NGL fractionators, you shall use Equation NN–7 of this section and the default values for the CO_2 emission factors found in Table NN–2 of this subpart.

(ii) Alternatively, reporter-specific CO_2 emission factors may be used, provided they are developed using methods outlined in § 98.404.

$$CO_{2m} = \sum_g Fuel_g \star EF_g \qquad \text{(Eq. NN-7)}$$

Where:

CO_{2m} = Annual CO_2 mass emissions that would result from the combustion or oxidation of each fractionated NGL product ''g'' received from other fractionators (metric tons).

$Fuel_g$ = Total annual volume of each NGL product ''g'' received (bbls).

EF = Fuel-specific CO_2 emission factor (MT CO_2/bbl).

(2) Calculate the total CO_2 equivalent emissions that would result from the

combustion or oxidation of fractionated NGLs supplied less the quantity received by other fractionators using Equation NN–8 of this section.

$$CO_2 = \sum CO_{2i} - \sum CO_{2j} \qquad \text{(Eq. NN-8)}$$

Where:

CO_2 = Annual CO_2 mass emissions that would result from the combustion or oxidation of fractionated NGLs delivered to customers or on behalf of customers (metric tons).

CO_{2i} = Annual CO_2 mass emissions that would result from the combustion or oxidation of fractionated NGLs delivered to all customers as calculated in paragraph (a)(1) or (a)(2) of this section (metric tons).

CO_{2m} = Annual CO_2 mass emissions that would result from the combustion or oxidation of fractionated NGLs received from other fractionators and calculated in paragraph (c)(1) of this section (metric tons).

§ 98.404 Monitoring and QA/QC requirements.

(a) *Determination of quantity*. (1) NGL fractionators and LDCs shall determine the quantity of NGLs and natural gas using methods in common use in the industry for billing purposes as audited under existing Sarbanes Oxley regulationn.

(i) Where an appropriate standard method published by a consensus-based standards organization exists, such a method shall be used. Consensus-based standards organizations include, but are not limited to, the following: ASTM International, the American National Standards Institute (ANSI), the American Gas Association (AGA), the American Society of Mechanical Engineers (ASME), the American Petroleum Institute (API), and the North American Energy Standards Board (NAESB).

(ii) Where no appropriate standard method developed by a consensus-based standards organization exists, industry standard practices shall be followed.

(2) NGL fractionators and LDCs shall base the minimum frequency of the product quantity measurements, to be summed to the annual quantity reported, on the reporter's standard practices for commercial operations.

(i) For NGL fractionators the minimum frequency of measurements shall be the measurements taken at custody transfers summed to the annual reportable volume.

(ii) For natural gas the minimum frequency of measurement shall be based on the LDC's standard measurement schedules used for billing purposes and summed to the annual reportable volume.

(3) NGL fractionators shall use measurement for NGLs at custody tranfer meters or at such meters that are used to determine the NGL product slate delivered from the fractionation facility.

(4) If a NGL fractionator supplies a product not listed in Table NN–1 of this subpart that is a mixture or blend of two or more products listed in Tables NN–1 and NN–2 of this subpart, the NGL fractionator shall report the quantities of the constituents of the mixtures or blends separately.

(5) For an LDC using Equation NN–1 or NN–2 of this subpart, the point(s) of measurement for the natural gas volume supplied shall be the LDC city gate meter(s).

(i) If the LDC makes its own quantity measurements according to established business practices, its own measurements shall be used.

(ii) If the LDC does not make its own quantity measurements according to established business practices, it shall use its delivering pipeline invoiced measurements for natural gas deliveries to the LDC city gate, used in determining daily system sendout.

(6) An LDC using Equation NN–3 of this subpart shall measure natural gas at the custody transfer meters.

(7) An LDC using Equation NN–4 of this subpart shall measure natural gas at the customer meters. The reporter shall consider the volume delivered through a single particluar meter at a single particular location as the volume delivered to an individual end-user.

(8) An LDC using Equation NN–5 of this subpart shall measure natural gas as follows:

(i) $Fuel_1$ shall be measured at the on-system storage injection meters and/or at the meters measuring natural gas to be liquefied.

(ii) $Fuel_2$ shall be measured at the meters used for measuring on-system storage withdrawals and/or LNG vaporization injection. If $Fuel_2$ is from a source other than storage, the appropriate meter shall be used to measure the quantity.

(9) An LDC shall measure all natural gas under the following standard industry temperature and pressure conditions: Cubic foot of gas at a temperature of 60 degrees Fahrenheit and at an absolute pressure of fourteen and seventy-three hundredths (14.73) pounds per square inch.

(b) *Determination of higher heating values (HHV).* (1) When a reporter uses the default HHV provided in this section to calculate Equation NN–1 of this subpart, the appropriate value shall be taken from Table NN–1 of this subpart.

(2) When a reporter uses a reporter-specific HHV to calculate Equation NN–1 of this subpart, an appropriate standard test published by a consensus-based standards organization shall be used. Consensus-based standards organizations include, but are not limited to, the following: AGA and GPA.

(i) If an LDC makes its own HHV measurements according to established business practices, then its own measurements shall be used.

(ii) If an LDC does not make its own measurements according to established business practices, it shall use its delivering pipeline measurements.

(c) *Determination of emission factor (EF).* (1) When a reporter used the default EF provided in this section to calculate Equation NN–1 of this subpart, the appropriate value shall be taken from Table NN–1 of this subpart.

(2) When a reporter used the default EF provided in this section to calculate Equation NN–2, NN–3, NN–4, NN–5, or NN–7 of this subpart, the appropriate value shall be taken from Table NN–2 of this subpart.

(3) When a reporter uses a reporter-specific EF, the reporter shall use an appropriate standard method published by a consensus-based standards organization to conduct compositional analysis necessary to determine reporter-specific CO_2 emission factors. Consensus-based standards organizations include, but are not limited to, the following: AGA and GPA.

(d) *Equipment calibration.* (1) Equipment used to measure quantities in Equations NN–1, NN–2, and NN–5 of this subpart shall be calibrated prior to its first use for reporting under this subpart, using a suitable standard method published by a consensus based standards organization or according to the equipment manufacturer's directions.

(2) Equipment used to measure quantities in Equations NN–1, NN–2, and NN–5 of this subpart shall be recalibrated at the frequency specified by the standard method used or by the manufacturer's directions.

§ 98.405 Procedures for estimating missing data.

(a) Whenever a quality-assured value of the quantity of natural gas liquids or natural gas supplied during any period is unavailable (e.g., if a flow meter malfunctions), a substitute data value for the missing quantity measurement must be used in the calculations according to paragraphs (b) and (c) of this section.

(b) *Determination of quantity.* (1) NGL fractionators shall substitute meter records provided by pipeline(s) for all pipeline receipts of NGLs; by manifests for deliveries made to trucks or rail cars; or metered quantities accepted by the entities purchasing the output from the fractionator whether by pipeline or by truck or rail car. In cases where the metered data from the receiving pipeline(s) or purchasing entities are not available, fractionators may substitute estimates based on contract quantities required to be delivered under purchase or delivery contracts with other parties.

(2) LDCs shall either substitute their delivering pipeline metered deliveries at the city gate or substitute nominations and scheduled delivery quantities for the period when metered values of actual deliveries are not available.

(c) *Determination of HHV and EF.* (1) Whenever an LDC that makes its own

HHV measurements according to established business practices cannot follow the quality assurance procedures for developing a reporter-specific HHV, as specified in § 98.404, during any period for any reason, the reporter shall use either its delivering pipeline measurements or the default HHV provided in Table NN–1 of this part for that period.

(2) Whenever an LDC that does not make its own HHV measurements according to established business practices or an NGL fractionator cannot follow the quality assurance procedures for developing a reporter-specific HHV, as specified in § 98.404, during any period for any reason, the reporter shall use the default HHV provided in Table NN–1 of this part for that period.

(3) Whenever a NGL fractionator cannot follow the quality assurance procedures for developing a reporter-specific HHV, as specified in § 98.404, during any period for any reason, the NGL fractionator shall use the default HHV provided in Table NN–1 of this part for that period.

(4) Whenever a reporter cannot follow the quality assurance procedures for developing a reporter-specific EF, as specified in § 98.404, during any period for any reason, the reporter shall use the default EF provided in § 98.408 for that period.

§ 98.406 Data reporting requirements.

(a) In addition to the information required by § 98.3(c), the annual report for each NGL fractionator covered by this rule shall contain the following information.

(1) Annual quantity (in barrels) of each NGL product supplied to downstream facilities in the following product categories: ethane, propane, normal butane, isobutane, and pentanes plus.

(2) Annual quantity (in barrels) of each NGL product received from other NGL fractionators in the following product categories: ethane, propane, normal butane, isobutane, and pentanes plus.

(3) Annual volumes in Mscf of natural gas received for processing.

(4) Annual quantity (in barrels) of y-grade, bulk NGLs received from others for fractionation.

(5) Annual quantity (in barrels) of propane that the NGL fractionator odorizes at the facility and delivers to others.

(6) Annual CO_2 emissions (metric tons) that would result from the complete combustion or oxidation of the quantities in paragraphs (b)(1) and (b)(2) of this section, calculated in accordance with § 98.403(a) and (c)(1).

(7) Annual CO_2 mass emissions (metric tons) that would result from the combustion or oxidation of fractionated NGLs supplied less the quantity received by other fractionators, calculated in accordance with § 98.403(c)(2).

(8) The specific industry standard used to measure each quantity reported in paragraph (a)(1) of this section.

(9) If the LNG fractionator developed reporter-specific EFs or HHVs, report the following:

(i) The specific industry standard(s) used to develop reporter-specific higher heating value(s) and/or emission factor(s), pursuant to § 98.404(b)(2) and (c)(3).

(ii) The developed HHV(s).

(iii) The developed EF(s).

(b) In addition to the information required by § 98.3(c), the annual report for each LDC shall contain the following information.

(1) Annual volume in Mscf of natural gas received by the LDC at its city gate stations for redelivery on the LDC's distribution system, including for use by the LDC.

(2) Annual volume in Mscf of natural gas placed into storage.

(3) Annual volume in Mscf of vaporized liquefied natural gas (LNG) produced at on-system vaporization facilities for delivery on the distribution system that is not accounted for in paragraph (b)(1) of this section.

(4) Annual volume in Mscf of natural gas withdrawn from on-system storage (that is not delivered to the city gate) for delivery on the distribution system.

(5) Annual volume in Mscf of natural gas delivered directly to LDC systems from producers or natural gas processing plants from local production.

(6) Annual volume in Mscf of natural gas delivered to downstream gas transmission pipelines and other local distribution companies.

(7) Annual volume in Mscf of natural gas delivered by LDC to each meter registering supply equal to or greater than 460,000 Mcsf during the calendar year.

(8) The total annual CO_2 mass emissions (metric tons) associated with the volumes in paragraphs (b)(1) through (b)(7) of this section, calculated in accordance with § 98.403(a) and (b)(1) through (b)(3).

(9) Annual CO_2 emissions (metric tons) that would result from the complete combustion or oxidation of the annual supply of natural gas to end-users registering less than 460,000 Mcsf, calculated in accordance with § 98.403(b)(4).

(10) The specific industry standard used to develop the volume reported in paragraph (b)(1) of this section.

(11) If the LDC developed reporter-specific EFs or HHVs, report the following:

(i) The specific industry standard(s) used to develop reporter-specific higher heating value(s) and/or emission factor(s), pursuant to § 98.404 (b)(2) and (c)(3).

(ii) The developed HHV(s).

(iii) The developed EF(s).

(12) The customer name, address, and meter number of each meter reading used to report in paragraph (b)(7) of this section.

(i) If known, report the EIA identification number of each LDC customer.

(ii) [Reserved]

(13) The annual volume in Mscf of natural gas delivered by the local distribution company to each of the following end-use categories. For definitions of these categories, refer to EIA Form 176 (Annual Report of Natural Gas and Supplemental Gas Supply & Disposition) and Instructions.

(i) Residential consumers.

(ii) Commercial consumers.

(iii) Industrial consumers.

(iv) Electricity generating facilities.

(c) Each reporter shall report the number of days in the reporting year for which substitute data procedures were used for the following purpose:

(1) To measure quantity.

(2) To develop HHV(s).

(3) To develop EF(s).

§ 98.407 Records that must be retained.

In addition to the information required by § 98.3(g), each annual report must contain the following information:

(a) Records of all daily meter readings and documentation to support volumes of natural gas and NGLs that are reported under this part.

(b) Records documenting any estimates of missing metered data and showing the calculations of the values used for the missing data.

(c) Calculations and worksheets used to estimate CO_2 emissions for the volumes reported under this part.

(d) Records related to the large end-users identified in § 98.406(b)(6).

(e) Records relating to measured Btu content or carbon content showing specific industry standards used to develop reporter-specific higher heating values and emission factors.

(f) Records of such audits as required by Sarbanes Oxley regulations on the accuracy of measurements of volumes of natural gas and NGLs delivered to customers or on behalf of customers.

§ 98.408 Definitions.

All terms used in this subpart have the same meaning given in the Clean Air Act and subpart A of this part.

TABLE NN–1 TO SUBPART NN OF PART 98—DEFAULT FACTORS FOR CALCULATION METHODOLOGY 1 OF THIS SUBPART

Fuel	Default high heating value factor	Default CO_2 emission factor (kg CO_2/MMBtu)
Natural Gas	1.027 MMBtu/Mscf	53.02
Propane	3.836 MMBtu/bbl	63.02
Normal butane	4.326 MMBtu/bbl	64.93
Ethane	3.082 MMBtu/bbl	59.58
Isobutane	3.974 MMBtu/bbl	65.08
Pentanes plus	4.620 MMBtu/bbl	66.90

TABLE NN–2 TO SUBPART NN OF PART 98—LOOKUP DEFAULT VALUES FOR CALCULATION METHODOLOGY 2 OF THIS SUBPART

Fuel	Unit	Default CO_2 emission value (MT CO_2/Unit)
Natural Gas	Mscf	0.054452
Propane	Barrel	0.241745
Normal butane	Barrel	0.280887
Ethane	Barrel	0.183626
Isobutane	Barrel	0.258628
Pentanes plus	Barrel	0.309078

Subpart OO—Suppliers of Industrial Greenhouse Gases

§ 98.410 Definition of the source category.

(a) The industrial gas supplier source category consists of any facility that produces a fluorinated GHG or nitrous oxide, any bulk importer of fluorinated GHGs or nitrous oxide, and any bulk exporter of fluorinated GHGs or nitrous oxide.

(b) To produce a fluorinated GHG means to manufacture a fluorinated GHG from any raw material or feedstock chemical. Producing a fluorinated GHG includes the manufacture of a fluorinated GHG for use in a process that will result in its transformation either at or outside of the production facility. Producing a fluorinated GHG also includes the creation of a fluorinated GHG (with the exception of HFC–23) that is captured and shipped off site for any reason, including destruction. Producing a fluorinated GHG does not include the reuse or recycling of a fluorinated GHG, the creation of HFC–23 during the production of HCFC–22, or the creation of by-products that are released or destroyed at the production facility.

(c) To produce nitrous oxide means to produce nitrous oxide by thermally decomposing ammonium nitrate (NH_4NO_3). Producing nitrous oxide does not include the reuse or recycling of nitrous oxide or the creation of by-products that are released or destroyed at the production facility.

§ 98.411 Reporting threshold.

Any supplier of industrial greenhouse gases who meets the requirements of § 98.2(a)(4) must report GHG emissions.

§ 98.412 GHGs to report.

You must report the GHG emissions that would result from the release of the nitrous oxide and each fluorinated GHG that you produce, import, export, transform, or destroy during the calendar year.

§ 98.413 Calculating GHG emissions.

(a) Calculate the total mass of each fluorinated GHG or nitrous oxide produced annually, except for amounts that are captured solely to be shipped off site for destruction, by using Equation OO–1 of this section:

$$P = \sum_{p=1}^{n} P_p \qquad \text{(Eq. OO-1)}$$

P = Mass of fluorinated GHG or nitrous oxide produced annually.

P_p = Mass of fluorinated GHG or nitrous oxide produced over the period ''p''.

(b) Calculate the total mass of each fluorinated GHG or nitrous oxide produced over the period ''p'' by using Equation OO–2 of this section:

$$P_p = O_p - U_p \qquad \text{(Eq. OO-2)}$$

Where:

P_p = Mass of fluorinated GHG or nitrous oxide produced over the period ''p'' (metric tons).

O_p = Mass of fluorinated GHG or nitrous oxide that is measured coming out of the production process over the period p (metric tons).

U_p = Mass of used fluorinated GHG or nitrous oxide that is added to the production process upstream of the output measurement over the period ''p'' (metric tons).

(c) Calculate the total mass of each fluorinated GHG or nitrous oxide transformed by using Equation OO–3 of this section:

$$T = F_T * E_T \qquad \text{(Eq. OO-3)}$$

Where:

T = Mass of fluorinated GHG or nitrous oxide transformed annually (metric tons).

F_T = Mass of fluorinated GHG fed into the transformation process annually (metric tons).

E_T = The fraction of the fluorinated GHG or nitrous oxide fed into the transformation process that is transformed in the process (metric tons).

(d) Calculate the total mass of each fluorinated GHG destroyed by using Equation OO–4 of this section:

$$D = F_D * DE \qquad \text{(Eq. OO-4)}$$

Where:

D = Mass of fluorinated GHG destroyed annually (metric tons).

F_D = Mass of fluorinated GHG fed into the destruction device annually (metric tons).

DE = Destruction efficiency of the destruction device (fraction).

§ 98.414 Monitoring and QA/QC requirements.

(a) The mass of fluorinated GHGs or nitrous oxide coming out of the production process shall be measured using flowmeters, weigh scales, or a combination of volumetric and density measurements with an accuracy and precision of one percent of full scale or better.

(b) The mass of any used fluorinated GHGs or used nitrous oxide added back into the production process upstream of the output measurement in paragraph (a) of this section shall be measured using flowmeters, weigh scales, or a combination of volumetric and density measurements with an accuracy and precision of one percent of full scale or better. If the mass in paragraph (a) of this section is measured by weighing containers that include returned heels as well as newly produced fluorinated GHGs, the returned heels shall be considered used fluorinated GHGs for purposes of this paragraph (b) of this section and § 98.413(b).

(c) The mass of fluorinated GHGs or nitrous oxide fed into the transformation process shall be measured using flowmeters, weigh scales, or a combination of volumetric and density measurements with an accuracy and precision of one percent of full scale or better.

(d) The fraction of the fluorinated GHGs or nitrous oxide fed into the transformation process that is actually transformed shall be estimated considering yield calculations or quantities of unreacted fluorinated GHGs or nitrous oxide permanently removed from the process and recovered, destroyed, or emitted.

(e) The mass of fluorinated GHG or nitrous oxide sent to another facility for transformation shall be measured using flowmeters, weigh scales, or a combination of volumetric and density measurements with an accuracy and precision of one percent of full scale or better.

(f) The mass of fluorinated GHG sent to another facility for destruction shall be measured using flowmeters, weigh scales, or a combination of volumetric and density measurements with an accuracy and precision of one percent of full scale or better. If the measured

mass includes more than trace concentrations of materials other than the fluorinated GHG, the concentration of the fluorinated GHG shall be estimated considering current or previous representative concentration measurements and other relevant process information. This concentration (mass fraction) shall be multiplied by the mass measurement to obtain the mass of the fluorinated GHG sent to another facility for destruction.

(g) You must estimate the share of the mass of fluorinated GHGs in paragraph (f) of this section that is comprised of fluorinated GHGs that are not included in the mass produced in § 98.413(a) because they are removed from the production process as by-products or other wastes.

(h) The mass of fluorinated GHGs fed into the destruction device shall be measured using flowmeters, weigh scales, or a combination of volumetric and density measurements with an accuracy and precision of one percent of full scale or better. If the measured mass includes more than trace concentrations of materials other than the fluorinated GHG being destroyed, the concentrations of fluorinated GHG being destroyed shall be estimated considering current or previous representative concentration measurements and other relevant process information. This concentration (mass fraction) shall be multiplied by the mass measurement to obtain the mass of the fluorinated GHG destroyed.

(i) Very small quantities of fluorinated GHGs that are difficult to measure because they are entrained in other media such as destroyed filters and destroyed sample containers are exempt from paragraphs (f) and (h) of this section.

(j) You must estimate the share of the mass of fluorinated GHGs in paragraph (h) of this section that is comprised of fluorinated GHGs that are not included in the mass produced in § 98.413(a) because they are removed from the production process as by-products or other wastes.

(k) For purposes of Equation OO–4 of this subpart, the destruction efficiency can be equated to the destruction efficiency determined during a previous performance test of the destruction device or, if no performance test has been done, the destruction efficiency provided by the manufacturer of the destruction device.

(l) In their estimates of the mass of fluorinated GHGs destroyed, fluorinated GHG production facilities that destroy fluorinated GHGs shall account for any temporary reductions in the destruction efficiency that result from any startups, shutdowns, or malfunctions of the destruction device, including departures from the operating conditions defined in state or local permitting requirements and/or oxidizer manufacturer specifications.

(m) Calibrate all flow meters, weigh scales, and combinations of volumetric and density measures that are used to measure or calculate quantities that are to be reported under this subpart prior to the first year for which GHG emissions are reported under this part. Calibrations performed prior to the effective date of this rule satisfy this requirement. Recalibrate all flow meters, weigh scales, and combinations of volumetric and density measures at the minimum frequency specified by the manufacturer. Use NIST-traceable standards and suitable methods published by a consensus standards organization (e.g., ASTM, ASME, ISO, or others).

§ 98.415 Procedures for estimating missing data.

(a) A complete record of all measured parameters used in the GHG emissions calculations is required. Therefore, whenever a quality-assured value of a required parameter is unavailable (e.g., if a meter malfunctions), a substitute data value for the missing parameter shall be used in the calculations, according to paragraph (b) of this section.

(b) For each missing value of the mass produced, fed into the production process (for used material being reclaimed), fed into the transformation process, fed into destruction devices, sent to another facility for transformation, or sent to another facility for destruction, the substitute value of that parameter shall be a secondary mass measurement where such a measurement is available. For example, if the mass produced is usually measured

with a flowmeter at the inlet to the day tank and that flowmeter fails to meet an accuracy or precision test, malfunctions, or is rendered inoperable, then the mass produced may be estimated by calculating the change in volume in the day tank and multiplying it by the density of the product. Where a secondary mass measurement is not available, the substitute value of the parameter shall be an estimate based on a related parameter. For example, if a flowmeter measuring the mass fed into a destruction device is rendered inoperable, then the mass fed into the destruction device may be estimated using the production rate and the previously observed relationship between the production rate and the mass flow rate into the destruction device.

§ 98.416 Data reporting requirements.

In addition to the information required by § 98.3(c), each annual report must contain the following information:

(a) Each fluorinated GHG or nitrous oxide production facility shall report the following information:

(1) Mass in metric tons of each fluorinated GHG or nitrous oxide produced at that facility by process, except for amounts that are captured solely to be shipped off site for destruction.

(2) Mass in metric tons of each fluorinated GHG or nitrous oxide transformed at that facility, by process.

(3) Mass in metric tons of each fluorinated GHG destroyed at that facility, except fluorinated GHGs not included in the calculation of mass produced in § 98.413(a) because they are removed from the production process as by-products or other wastes. Quantities to be reported under this paragraph (a)(3) of this section could include, for example, quantities that are returned to the facility for reclamation but are found to be irretrievably contaminated and are therefore destroyed.

(4) Mass in metric tons of each fluorinated GHG that is destroyed at that facility except GHGs not included in the calculation of mass produced in § 98.413(a) because they are removed from the production process as byproducts or other wastes.

(5) Total mass in metric tons of each fluorinated GHG or nitrous oxide sent to another facility for transformation.

(6) Total mass in metric tons of each fluorinated GHG sent to another facility for destruction, except fluorinated GHGs that are not included in the mass produced in § 98.413(a) because they are removed from the production process as by-products or other wastes. Quantities to be reported under this paragraph (a)(6) could include, for example, fluorinated GHGs that are returned to the facility for reclamation but are found to be irretrievably contaminated and are therefore sent to another facility for destruction.

(7) Total mass in metric tons of each fluorinated GHG that is sent to another facility for destruction and that is not included in the mass produced in § 98.413(a) because it is removed from the production process as a byproduct or other waste.

(8) Total mass in metric tons of each reactant fed into the F–GHG or nitrous oxide production process, by process.

(9) Total mass in metric tons of the reactants, by-products, and other wastes permanently removed from the F–GHG or nitrous oxide production process, by process.

(10) For transformation processes that do not produce an F–GHG or nitrous oxide, mass in metric tons of any fluorinated GHG or nitrous oxide fed into the transformation process, by process.

(11) Mass in metric tons of each fluorinated GHG fed into the destruction device.

(12) Mass in metric tons of each fluorinated GHG or nitrous oxide that is measured coming out of the production process, by process.

(13) Mass in metric tons of each used fluorinated GHGs or nitrous oxide added back into the production process (e.g., for reclamation), including returned heels in containers that are weighed to measure the mass in § 98.414(a), by process.

(14) Names and addresses of facilities to which any nitrous oxide or fluorinated GHGs were sent for transformation, and the quantities (metric tons) of nitrous oxide and of each

fluorinated GHG that were sent to each for transformation.

(15) Names and addresses of facilities to which any fluorinated GHGs were sent for destruction, and the quantities (metric tons) of nitrous oxide and of each fluorinated GHG that were sent to each for destruction.

(16) Where missing data have been estimated pursuant to §98.415, the reason the data were missing, the length of time the data were missing, the method used to estimate the missing data, and the estimates of those data.

(b) A fluorinated GHG production facility or importer that destroys fluorinated GHGs shall submit a one-time report containing the following information:

(1) Destruction efficiency (DE) of each destruction unit.

(2) Methods used to determine the destruction efficiency.

(3) Methods used to record the mass of fluorinated GHG destroyed.

(4) Chemical identity of the fluorinated GHG(s) used in the performance test conducted to determine DE.

(5) Name of all applicable federal or state regulations that may apply to the destruction process.

(6) If any process changes affect unit destruction efficiency or the methods used to record mass of fluorinated GHG destroyed, then a revised report must be submitted to reflect the changes. The revised report must be submitted to EPA within 60 days of the change.

(c) A bulk importer of fluorinated GHGs or nitrous oxide shall submit an annual report that summarizes their imports at the corporate level, except for shipments including less than 250 metric tons of CO_2e, transshipments, and heels that meet the conditions set forth at §98.417(e). The report shall contain the following information for each import:

(1) Total mass in metric tons of nitrous oxide and each fluorinated GHG imported in bulk.

(2) Total mass in metric tons of nitrous oxide and each fluorinated GHG imported in bulk and sold or transferred to persons other than the importer for use in processes resulting in the transformation or destruction of the chemical.

(3) Date on which the fluorinated GHGs or nitrous oxide were imported.

(4) Port of entry through which the fluorinated GHGs or nitrous oxide passed.

(5) Country from which the imported fluorinated GHGs or nitrous oxide were imported.

(6) Commodity code of the fluorinated GHGs or nitrous oxide shipped.

(7) Importer number for the shipment.

(8) Total mass in metric tons of each fluorinated GHG destroyed by the importer.

(9) If applicable, the names and addresses of the persons and facilities to which the nitrous oxide or fluorinated GHGs were sold or transferred for transformation, and the quantities (metric tons) of nitrous oxide and of each fluorinated GHG that were sold or transferred to each facility for transformation.

(10) If applicable, the names and addresses of the persons and facilities to which the nitrous oxide or fluorinated GHGs were sold or transferred for destruction, and the quantities (metric tons) of nitrous oxide and of each fluorinated GHG that were sold or transferred to each facility for destruction.

(d) A bulk exporter of fluorinated GHGs or nitrous oxide shall submit an annual report that summarizes their exports at the corporate level, except for shipments including less than 250 metric tons of CO_2e, transshipments, and heels. The report shall contain the following information for each export:

(1) Total mass in metric tons of nitrous oxide and each fluorinated GHG exported in bulk.

(2) Names and addresses of the exporter and the recipient of the exports.

(3) Exporter's Employee Identification Number.

(4) Commodity code of the fluorinated GHGs and nitrous oxide shipped.

(5) Date on which, and the port from which, fluorinated GHGs and nitrous oxide were exported from the United States or its territories.

(6) Country to which the fluorinated GHGs or nitrous oxide were exported.

(e) By April 1, 2011, a fluorinated GHG production facility shall submit a one-time report describing the following information:

(1) The method(s) by which the producer in practice measures the mass of fluorinated GHGs produced, including the instrumentation used (Coriolis flowmeter, other flowmeter, weigh scale, etc.) and its accuracy and precision.

(2) The method(s) by which the producer in practice estimates the mass of fluorinated GHGs fed into the transformation process, including the instrumentation used (Coriolis flowmeter, other flowmeter, weigh scale, etc.) and its accuracy and precision.

(3) The method(s) by which the producer in practice estimates the fraction of fluorinated GHGs fed into the transformation process that is actually transformed, and the estimated precision and accuracy of this estimate.

(4) The method(s) by which the producer in practice estimates the masses of fluorinated GHGs fed into the destruction device, including the method(s) used to estimate the concentration of the fluorinated GHGs in the destroyed material, and the estimated precision and accuracy of this estimate.

(5) The estimated percent efficiency of each production process for the fluorinated GHG produced.

§ 98.417 Records that must be retained.

(a) In addition to the data required by § 98.3(g), the fluorinated GHG production facility shall retain the following records:

(1) Dated records of the data used to estimate the data reported under § 98.416.

(2) Records documenting the initial and periodic calibration of the gas chromatographs, weigh scales, flowmeters, and volumetric and density measures used to measure the quantities reported under this subpart, including the industry standards or manufacturer directions used for calibration pursuant to § 98.414(j) and (k).

(b) In addition to the data required by paragraph (a) of this section, the fluorinated GHG production facility that destroys fluorinated GHGs shall keep records of test reports and other information documenting the facility's one-time destruction efficiency report and annual destruction device outlet reports in § 98.416(b) and (e).

(c) In addition to the data required by § 98.3(g), the bulk importer shall retain the following records substantiating each of the imports that they report:

(1) A copy of the bill of lading for the import.

(2) The invoice for the import.

(3) The U.S. Customs entry form.

(d) In addition to the data required by § 98.3(g), the bulk exporter shall retain the following records substantiating each of the exports that they report:

(1) A copy of the bill of lading for the export and

(2) The invoice for the import.

(e) Every person who imports a container with a heel that is not reported under § 98.416(c) shall keep records of the amount brought into the United States that document that the residual amount in each shipment is less than 10 percent of the volume of the container and will:

(1) Remain in the container and be included in a future shipment.

(2) Be recovered and transformed.

(3) Be recovered and destroyed.

(4) Be recovered and included in a future shipment.

§ 98.418 Definitions.

All terms used in this subpart have the same meaning given in the Clean Air Act and subpart A of this part.

Subpart PP—Suppliers of Carbon Dioxide

§ 98.420 Definition of the source category.

(a) The carbon dioxide (CO_2) supplier source category consists of the following:

(1) Facilities with production process units that capture a CO_2 stream for purposes of supplying CO_2 for commercial applications or that capture and maintain custody of a CO_2 stream in order to sequester or otherwise inject it underground. Capture refers to the initial separation and removal of CO_2

from a manufacturing process or any other process.

(2) Facilities with CO_2 production wells that extract or produce a CO_2 stream for purposes of supplying CO_2 for commercial applications or that extract and maintain custody of a CO_2 stream in order to sequester or otherwise inject it underground.

(3) Importers or exporters of bulk CO_2.

(b) This source category is focused on upstream supply. It does not cover:

(1) Storage of CO_2 above ground or in geologic formations.

(2) Use of CO_2 in enhanced oil and gas recovery.

(3) Transportation or distribution of CO_2.

(4) Purification, compression, or processing of CO_2.

(5) On-site use of CO_2 captured on site.

(c) This source category does not include CO_2 imported or exported in equipment, such as fire extinguishers.

§ 98.421 Reporting threshold.

Any supplier of CO_2 who meets the requirements of § 98.2(a)(4) of subpart A of this part must report the mass of CO_2 captured, extracted, imported, or exported.

§ 98.422 GHGs to report.

(a) Mass of CO_2 captured from each production process unit.

(b) Mass of CO_2 extracted from each CO_2 production wells.

(c) Mass of CO_2 imported.

(d) Mass of CO_2 exported.

§ 98.423 Calculating CO_2 supply.

(a) Calculate the annual mass of CO_2 captured, extracted, imported, or exported through each flow meter in accordance with the procedures specified in either paragraph (a)(1) or (a)(2) of this section. If multiple flow meters are used, you shall calculate the annual mass of CO_2 for all flow meters according to the procedures specified in paragraph (a)(3) of this section.

(1) For each mass flow meter, you shall calculate quarterly the mass of CO_2 in a CO_2 stream in metric tons, prior to any subsequent purification, processing, or compressing, by multiplying the mass flow by the composition data, according to Equation PP–1 of this section. Mass flow and composition data measurements shall be made in accordance with § 98.424 of this subpart.

$$CO_{2,u} = \sum_{p=1}^{4} Q_{p,u} * C_{CO_{2,p,u}} \qquad \text{(Eq. PP-1)}$$

Where:

$CO_{2,u}$ = Annual mass of CO_2 (metric tons) through flow meter u.

$C_{CO_2,p,u}$ = Quarterly CO_2 concentration measurement in flow for flow meter u in quarter p (wt. %CO_2).

$Q_{p,u}$ = Quarterly mass flow rate measurement for flow meter u in quarter p (metric tons).

p = Quarter of the year.

u = Flow meter.

(2) For each volumetric flow meter, you shall calculate quarterly the mass of CO_2 in a CO_2 stream in metric tons, prior to any subsequent purification, processing, or compressing, by multiplying the volumetric flow by the concentration and density data, according to Equation PP–2 of this section. Volumetric flow, concentration and density data measurements shall be made in accordance with § 98.424 of this section.

$$CO_{2,u} = \sum_{p=1}^{4} Q_p * D_p * C_{CO_{2,p}} \qquad \text{(Eq. PP-2)}$$

Where:

$CO_{2,u}$ = Annual mass of CO_2 (metric tons) through flow meter u.

$C_{CO_2,p}$ = Quarterly CO_2 concentration measurement in flow for flow meter u in quarter p (wt. % CO_2).

Q_p = Quarterly volumetric flow rate measurement for flow meter u in quarter p (standard cubic meters).

D_p = Quarterly CO_2 stream density measurement for flow meter u in quarter p (metric tons per standard cubic meter).

p = Quarter of the year.

u = Flow meter.

(3) To aggregate data, sum the mass of CO_2 for all flow meters in accordance with Equation PP–3 of this section.

$$CO_2 = \sum_{p=1}^{U} CO_{2,u} \qquad \text{(Eq. PP-3)}$$

Where:

CO_2 = Annual mass of CO_2 (metric tons) through all flow meters.

$CO_{2,u}$ = Annual mass of CO_2 (metric tons) through flow meter u.

u = Flow meter.

(b) Importers or exporters that import or export CO_2 in containers shall calculate the total mass of CO_2 imported or exported in metric tons, prior to any subsequent purification, processing, or compressing, based on summing the mass in each CO_2 container using weigh bills, scales, or load cells according to Equation PP–4 of this section.

$$CO_2 = \sum_{p=1}^{I} Q \qquad \text{(Eq. PP-4)}$$

Where:

CO_2 = Annual mass of CO_2 (metric tons).

Q = Annual mass in all CO_2 containers imported or exported during the reporting year (metric tons).

§ 98.424 Monitoring and QA/QC requirements.

(a) *Determination of quantity.* (1) Reporters that have a mass flow meter or volumetric flow meter installed to measure the flow of a CO_2 stream shall base calculations in § 98.423 of this subpart on the installed mass flow or volumetric flow meters.

(2) Reporters that do not have a mass flow meter or volumetric flow meter installed to measure the flow of the CO_2 stream shall base calculations in § 98.423 of this subpart on the flow of gas transferred off site using a mass flow meter or a volumetric flow meter located at the point of off-site transfer.

(3) Importers or exporters that import or export CO_2 in containers shall measure the mass in each CO_2 container using weigh bills, scales, or load cells and sum the mass in all containers imported or exported during the reporting year.

(4) All flow meters, scales, and load cells used to measure quantities that are reported in § 98.423 of this subpart shall be operated and calibrated according to the following procedure:

(i) You shall use an appropriate standard method published by a consensus-based standards organization if such a method exists. Consensus-based standards organizations include, but are not limited to, the following: ASTM International, the American National Standards Institute (ANSI), the American Gas Association (AGA), the American Society of Mechanical Engineers (ASME), the American Petroleum Institute (API), and the North American Energy Standards Board (NAESB).

(ii) Where no appropriate standard method developed by a consensus-based standards organization exists, you shall follow industry standard practices.

(iii) You must ensure that any flow meter calibrations performed are NIST traceable.

(5) Reporters using Equation PP–2 of this subpart shall measure the density of the CO_2 stream on a quarterly basis in order to calculate the mass of the CO_2 stream according to the following procedure:

(i) You shall use an appropriate standard method published by a consensus-based standards organization to measure density if such a method exists. Consensus-based standards organizations include, but are not limited to, the following: ASTM International, the American National Standards Institute (ANSI), the American Gas Association (AGA), the American Society of Mechanical Engineers (ASME), the American Petroleum Institute (API), and the North American Energy Standards Board (NAESB).

(ii) Where no appropriate standard method developed by a consensus-based standards organization exists, you shall follow industry standard practices.

(b) *Determination of concentration.* (1) Reporters using Equation PP–1 or PP–2 of this subpart shall sample the CO_2 stream on a quarterly basis to determine the composition of the CO_2 stream.

(2) Methods to measure the composition of the CO_2 stream must conform to applicable chemical analytical standards. Acceptable methods include U.S. Food and Drug Administration food-grade specifications for CO_2 (see 21 CFR 184.1250) and ASTM standard E1747–95 (Reapproved 2005) Standard Guide for Purity of Carbon Dioxide Used in Supercritical Fluid Applications (incorporated by reference, see § 98.7 of subpart A of this part).

§ 98.425 Procedures for estimating missing data.

(a) Whenever the quality assurance procedures in § 98.424(a) of this subpart cannot be followed to measure quarterly mass flow or volumetric flow of CO_2, the most appropriate of the following missing data procedures shall be followed:

(1) A quarterly CO_2 mass flow or volumetric flow value that is missing may be substituted with a quarterly value measured during another quarter of the current reporting year.

(2) A quarterly CO_2 mass flow or volumetric flow value that is missing may be substituted with a quarterly value measured during the same quarter from the past reporting year.

(3) If a mass or volumetric flow meter is installed to measure the CO_2 stream, you may substitute data from a mass or volumetric flow meter measuring the CO_2 stream transferred for any period during which the installed meter is inoperable.

(4) The mass or volumetric flow used for purposes of product tracking and billing according to the reporter's established procedures may be substituted for any period during which measurement equipment is inoperable.

(b) Whenever the quality assurance procedures in § 98.424(b) of this subpart cannot be followed to determine concentration of the CO_2 stream, the most appropriate of the following missing data procudures shall be followed:

(1) A quarterly concentration value that is missing may be substituted with a quarterly value measured during another quarter of the current reporting year.

(2) A quarterly concentration value that is missing may be substituted with a quarterly value measured during the same quarter from the previous reporting year.

(3) The concentration used for purposes of product tracking and billing according to the reporter's established procedures may be substituted for any quarterly value.

(c) Missing data on density of the CO_2 stream shall be substituted with quarterly or annual average values from the previous calendar year.

§ 98.426 Data reporting requirements.

In addition to the information required by § 98.3(c) of subpart A of this part, the annual report shall contain the following information, as applicable:

(a) If you use Equation PP–1 of this subpart, report the following information for each mass flow meter:

(1) Annual mass in metric tons of CO_2.

(2) Quarterly mass flow of CO_2.

(3) Quarterly concentration of the CO_2 stream.

(4) The standard used to measure CO_2 concentration.

(b) If you use Equation PP–2 of this subpart, report the following information for each volumetric flow meter:

(1) Annual mass in metric tons of CO_2.

(2) Quarterly volumetric flow of CO_2.

(3) Quarterly concentration of the CO_2 stream.

(4) Quarterly density of the CO_2 stream.

(5) The method used to measure density.

(6) The standard used to measure CO_2 concentration.

(c) If you use Equation PP–3 of this subpart, report the annual CO_2 mass in metric tons from all flow meters.

(d) If you use Equation PP–4 of this subpart, report at the corporate level the annual mass of CO_2 in metric tons

in all CO_2 containers that are imported or exported.

(e) Each reporter shall report the following information:

(1) The type of equipment used to measure the total flow of the CO_2 stream or the total mass in CO_2 containers.

(2) The standard used to operate and calibrate the equipment reported in (e)(1) of this section.

(3) The number of days in the reporting year for which substitute data procedures were used for the following purpose:

(i) To measure quantity.

(ii) To measure concentration.

(iii) To measure density.

(f) Report the aggregated annual quantity of CO_2 in metric tons that is transferred to each of the following end use applications, if known:

(1) Food and beverage.

(2) Industrial and municipal water/wastewater treatment.

(3) Metal fabrication, including welding and cutting.

(4) Greenhouse uses for plant growth.

(5) Fumigants (e.g., grain storage) and herbicides.

(6) Pulp and paper.

(7) Cleaning and solvent use.

(8) Fire fighting.

(9) Transportation and storage of explosives.

(10) Enhanced oil and natural gas recovery.

(11) Long-term storage (sequestration).

(12) Research and development.

(13) Other.

(g) Each production process unit that captures a CO_2 stream for purposes of supplying CO_2 for commercial applications or in order to sequester or otherwise inject it underground when custody of the CO_2 is maintained shall report the percentage of that stream, if any, that is biomass-based during the reporting year.

§ 98.427 Records that must be retained.

In addition to the records required by § 98.3(g) of subpart A of this part, you must retain the records specified in paragraphs (a) through (c) of this section, as applicable.

(a) The owner or operator of a facility containing production process units must retain quarterly records of captured or transferred CO_2 streams and composition.

(b) The owner or operator of a CO_2 production well facility must maintain quarterly records of the mass flow or volumetric flow of the extracted or transferred CO_2 stream and concentration and density if volumetric flow meters are used.

(c) Importers or exporters of CO_2 must retain annual records of the mass flow, volumetric flow, and mass of CO_2 imported or exported.

§ 98.428 Definitions.

All terms used in this subpart have the same meaning given in the Clean Air Act and subpart A of this part.

PART 99 [RESERVED]

FINDING AIDS

A list of CFR titles, subtitles, chapters, subchapters and parts and an alphabetical list of agencies publishing in the CFR are included in the CFR Index and Finding Aids volume to the Code of Federal Regulations which is published separately and revised annually.

Table of CFR Titles and Chapters
Alphabetical List of Agencies Appearing in the CFR
List of CFR Sections Affected

Table of CFR Titles and Chapters

(Revised as of July 1, 2010)

Title 1—General Provisions

I Administrative Committee of the Federal Register (Parts 1—49)
II Office of the Federal Register (Parts 50—299)
IV Miscellaneous Agencies (Parts 400—500)

Title 2—Grants and Agreements

SUBTITLE A—OFFICE OF MANAGEMENT AND BUDGET GUIDANCE FOR GRANTS AND AGREEMENTS

I Office of Management and Budget Governmentwide Guidance for Grants and Agreements (Parts 100—199)
II Office of Management and Budget Circulars and Guidance (200—299)

SUBTITLE B—FEDERAL AGENCY REGULATIONS FOR GRANTS AND AGREEMENTS

III Department of Health and Human Services (Parts 300— 399)
IV Department of Agriculture (Parts 400—499)
VI Department of State (Parts 600—699)
VIII Department of Veterans Affairs (Parts 800—899)
IX Department of Energy (Parts 900—999)
XI Department of Defense (Parts 1100—1199)
XII Department of Transportation (Parts 1200—1299)
XIII Department of Commerce (Parts 1300—1399)
XIV Department of the Interior (Parts 1400—1499)
XV Environmental Protection Agency (Parts 1500—1599)
XVIII National Aeronautics and Space Administration (Parts 1880—1899)
XXII Corporation for National and Community Service (Parts 2200—2299)
XXIII Social Security Administration (Parts 2300—2399)
XXIV Housing and Urban Development (Parts 2400—2499)
XXV National Science Foundation (Parts 2500—2599)
XXVI National Archives and Records Administration (Parts 2600—2699)
XXVII Small Business Administration (Parts 2700—2799)
XXVIII Department of Justice (Parts 2800—2899)
XXX Department of Homeland Security (Parts 3000—3099)
XXXI Institute of Museum and Library Services (Parts 3100—3199)
XXXII National Endowment for the Arts (Parts 3200—3299)

Title 2—Grants and Agreements—Continued

Chap.	
XXXIII	National Endowment for the Humanities (Parts 3300—3399)
XXXV	Export-Import Bank of the United States (Parts 3500—3599)
XXXVII	Peace Corps (Parts 3700—3799)

Title 3—The President

I	Executive Office of the President (Parts 100—199)

Title 4—Accounts

I	Government Accountability Office (Parts 1—99)
II	Recovery Accountability and Transparency Board (Parts 200—299)

Title 5—Administrative Personnel

I	Office of Personnel Management (Parts 1—1199)
II	Merit Systems Protection Board (Parts 1200—1299)
III	Office of Management and Budget (Parts 1300—1399)
V	The International Organizations Employees Loyalty Board (Parts 1500—1599)
VI	Federal Retirement Thrift Investment Board (Parts 1600—1699)
VIII	Office of Special Counsel (Parts 1800—1899)
IX	Appalachian Regional Commission (Parts 1900—1999)
XI	Armed Forces Retirement Home (Parts 2100—2199)
XIV	Federal Labor Relations Authority, General Counsel of the Federal Labor Relations Authority and Federal Service Impasses Panel (Parts 2400—2499)
XV	Office of Administration, Executive Office of the President (Parts 2500—2599)
XVI	Office of Government Ethics (Parts 2600—2699)
XXI	Department of the Treasury (Parts 3100—3199)
XXII	Federal Deposit Insurance Corporation (Parts 3200—3299)
XXIII	Department of Energy (Parts 3300—3399)
XXIV	Federal Energy Regulatory Commission (Parts 3400—3499)
XXV	Department of the Interior (Parts 3500—3599)
XXVI	Department of Defense (Parts 3600— 3699)
XXVIII	Department of Justice (Parts 3800—3899)
XXIX	Federal Communications Commission (Parts 3900—3999)
XXX	Farm Credit System Insurance Corporation (Parts 4000—4099)
XXXI	Farm Credit Administration (Parts 4100—4199)
XXXIII	Overseas Private Investment Corporation (Parts 4300—4399)
XXXV	Office of Personnel Management (Parts 4500—4599)
XL	Interstate Commerce Commission (Parts 5000—5099)
XLI	Commodity Futures Trading Commission (Parts 5100—5199)
XLII	Department of Labor (Parts 5200—5299)

Title 5—Administrative Personnel—Continued

Chap.	
XLIII	National Science Foundation (Parts 5300—5399)
XLV	Department of Health and Human Services (Parts 5500—5599)
XLVI	Postal Rate Commission (Parts 5600—5699)
XLVII	Federal Trade Commission (Parts 5700—5799)
XLVIII	Nuclear Regulatory Commission (Parts 5800—5899)
L	Department of Transportation (Parts 6000—6099)
LII	Export-Import Bank of the United States (Parts 6200—6299)
LIII	Department of Education (Parts 6300—6399)
LIV	Environmental Protection Agency (Parts 6400—6499)
LV	National Endowment for the Arts (Parts 6500—6599)
LVI	National Endowment for the Humanities (Parts 6600—6699)
LVII	General Services Administration (Parts 6700—6799)
LVIII	Board of Governors of the Federal Reserve System (Parts 6800—6899)
LIX	National Aeronautics and Space Administration (Parts 6900—6999)
LX	United States Postal Service (Parts 7000—7099)
LXI	National Labor Relations Board (Parts 7100—7199)
LXII	Equal Employment Opportunity Commission (Parts 7200—7299)
LXIII	Inter-American Foundation (Parts 7300—7399)
LXIV	Merit Systems Protection Board (Parts 7400—7499)
LXV	Department of Housing and Urban Development (Parts 7500—7599)
LXVI	National Archives and Records Administration (Parts 7600—7699)
LXVII	Institute of Museum and Library Services (Parts 7700—7799)
LXVIII	Commission on Civil Rights (Parts 7800—7899)
LXIX	Tennessee Valley Authority (Parts 7900—7999)
LXXI	Consumer Product Safety Commission (Parts 8100—8199)
LXXII	Special Inspector General for Iraq Reconstruction (Parts 8200—8299)
LXXIII	Department of Agriculture (Parts 8300—8399)
LXXIV	Federal Mine Safety and Health Review Commission (Parts 8400—8499)
LXXVI	Federal Retirement Thrift Investment Board (Parts 8600—8699)
LXXVII	Office of Management and Budget (Parts 8700—8799)
XCVII	Department of Homeland Security Human Resources Management System (Department of Homeland Security—Office of Personnel Management) (Parts 9700—9799)
XCIX	Department of Defense Human Resources Management and Labor Relations Systems (Department of Defense—Office of Personnel Management) (Parts 9900—9999)

Title 6—Domestic Security

I	Department of Homeland Security, Office of the Secretary (Parts 0—99)

Title 7—Agriculture

Chap.

SUBTITLE A—OFFICE OF THE SECRETARY OF AGRICULTURE (PARTS 0—26)

SUBTITLE B—REGULATIONS OF THE DEPARTMENT OF AGRICULTURE

I Agricultural Marketing Service (Standards, Inspections, Marketing Practices), Department of Agriculture (Parts 27—209)

II Food and Nutrition Service, Department of Agriculture (Parts 210—299)

III Animal and Plant Health Inspection Service, Department of Agriculture (Parts 300—399)

IV Federal Crop Insurance Corporation, Department of Agriculture (Parts 400—499)

V Agricultural Research Service, Department of Agriculture (Parts 500—599)

VI Natural Resources Conservation Service, Department of Agriculture (Parts 600—699)

VII Farm Service Agency, Department of Agriculture (Parts 700—799)

VIII Grain Inspection, Packers and Stockyards Administration (Federal Grain Inspection Service), Department of Agriculture (Parts 800—899)

IX Agricultural Marketing Service (Marketing Agreements and Orders; Fruits, Vegetables, Nuts), Department of Agriculture (Parts 900—999)

X Agricultural Marketing Service (Marketing Agreements and Orders; Milk), Department of Agriculture (Parts 1000—1199)

XI Agricultural Marketing Service (Marketing Agreements and Orders; Miscellaneous Commodities), Department of Agriculture (Parts 1200—1299)

XIV Commodity Credit Corporation, Department of Agriculture (Parts 1400—1499)

XV Foreign Agricultural Service, Department of Agriculture (Parts 1500—1599)

XVI Rural Telephone Bank, Department of Agriculture (Parts 1600—1699)

XVII Rural Utilities Service, Department of Agriculture (Parts 1700—1799)

XVIII Rural Housing Service, Rural Business-Cooperative Service, Rural Utilities Service, and Farm Service Agency, Department of Agriculture (Parts 1800—2099)

XX Local Television Loan Guarantee Board (Parts 2200—2299)

XXVI Office of Inspector General, Department of Agriculture (Parts 2600—2699)

XXVII Office of Information Resources Management, Department of Agriculture (Parts 2700—2799)

XXVIII Office of Operations, Department of Agriculture (Parts 2800—2899)

XXIX Office of Energy Policy and New Uses, Department of Agriculture (Parts 2900—2999)

XXX Office of the Chief Financial Officer, Department of Agriculture (Parts 3000—3099)

Title 7—Agriculture—Continued

Chap.	
XXXI	Office of Environmental Quality, Department of Agriculture (Parts 3100—3199)
XXXII	Office of Procurement and Property Management, Department of Agriculture (Parts 3200—3299)
XXXIII	Office of Transportation, Department of Agriculture (Parts 3300—3399)
XXXIV	National Institute of Food and Agriculture (Parts 3400—3499)
XXXV	Rural Housing Service, Department of Agriculture (Parts 3500—3599)
XXXVI	National Agricultural Statistics Service, Department of Agriculture (Parts 3600—3699)
XXXVII	Economic Research Service, Department of Agriculture (Parts 3700—3799)
XXXVIII	World Agricultural Outlook Board, Department of Agriculture (Parts 3800—3899)
XLI	[Reserved]
XLII	Rural Business-Cooperative Service and Rural Utilities Service, Department of Agriculture (Parts 4200—4299)
L	Rural Business-Cooperative Service, Rurual Housing Service, and Rural Utilities Service, Department of Agriculture (Parts 5000—5099)

Title 8—Aliens and Nationality

I	Department of Homeland Security (Immigration and Naturalization) (Parts 1—499)
V	Executive Office for Immigration Review, Department of Justice (Parts 1000—1399)

Title 9—Animals and Animal Products

I	Animal and Plant Health Inspection Service, Department of Agriculture (Parts 1—199)
II	Grain Inspection, Packers and Stockyards Administration (Packers and Stockyards Programs), Department of Agriculture (Parts 200—299)
III	Food Safety and Inspection Service, Department of Agriculture (Parts 300—599)

Title 10—Energy

I	Nuclear Regulatory Commission (Parts 0—199)
II	Department of Energy (Parts 200—699)
III	Department of Energy (Parts 700—999)
X	Department of Energy (General Provisions) (Parts 1000—1099)
XIII	Nuclear Waste Technical Review Board (Parts 1303—1399)
XVII	Defense Nuclear Facilities Safety Board (Parts 1700—1799)
XVIII	Northeast Interstate Low-Level Radioactive Waste Commission (Parts 1800—1899)

Title 11—Federal Elections

Chap.

I Federal Election Commission (Parts 1—9099)

II Election Assistance Commission (Parts 9400—9499)

Title 12—Banks and Banking

I Comptroller of the Currency, Department of the Treasury (Parts 1—199)

II Federal Reserve System (Parts 200—299)

III Federal Deposit Insurance Corporation (Parts 300—399)

IV Export-Import Bank of the United States (Parts 400—499)

V Office of Thrift Supervision, Department of the Treasury (Parts 500—599)

VI Farm Credit Administration (Parts 600—699)

VII National Credit Union Administration (Parts 700—799)

VIII Federal Financing Bank (Parts 800—899)

IX Federal Housing Finance Board (Parts 900—999)

XI Federal Financial Institutions Examination Council (Parts 1100—1199)

XII Federal Housing Finance Agency (Parts 1200—1299)

XIV Farm Credit System Insurance Corporation (Parts 1400—1499)

XV Department of the Treasury (Parts 1500—1599)

XVII Office of Federal Housing Enterprise Oversight, Department of Housing and Urban Development (Parts 1700—1799)

XVIII Community Development Financial Institutions Fund, Department of the Treasury (Parts 1800—1899)

Title 13—Business Credit and Assistance

I Small Business Administration (Parts 1—199)

III Economic Development Administration, Department of Commerce (Parts 300—399)

IV Emergency Steel Guarantee Loan Board (Parts 400—499)

V Emergency Oil and Gas Guaranteed Loan Board (Parts 500—599)

Title 14—Aeronautics and Space

I Federal Aviation Administration, Department of Transportation (Parts 1—199)

II Office of the Secretary, Department of Transportation (Aviation Proceedings) (Parts 200—399)

III Commercial Space Transportation, Federal Aviation Administration, Department of Transportation (Parts 400—499)

V National Aeronautics and Space Administration (Parts 1200—1299)

VI Air Transportation System Stabilization (Parts 1300—1399)

Title 15—Commerce and Foreign Trade

Chap.

SUBTITLE A—OFFICE OF THE SECRETARY OF COMMERCE (PARTS 0—29)

SUBTITLE B—REGULATIONS RELATING TO COMMERCE AND FOREIGN TRADE

I Bureau of the Census, Department of Commerce (Parts 30—199)

II National Institute of Standards and Technology, Department of Commerce (Parts 200—299)

III International Trade Administration, Department of Commerce (Parts 300—399)

IV Foreign-Trade Zones Board, Department of Commerce (Parts 400—499)

VII Bureau of Industry and Security, Department of Commerce (Parts 700—799)

VIII Bureau of Economic Analysis, Department of Commerce (Parts 800—899)

IX National Oceanic and Atmospheric Administration, Department of Commerce (Parts 900—999)

XI Technology Administration, Department of Commerce (Parts 1100—1199)

XIII East-West Foreign Trade Board (Parts 1300—1399)

XIV Minority Business Development Agency (Parts 1400—1499)

SUBTITLE C—REGULATIONS RELATING TO FOREIGN TRADE AGREEMENTS

XX Office of the United States Trade Representative (Parts 2000—2099)

SUBTITLE D—REGULATIONS RELATING TO TELECOMMUNICATIONS AND INFORMATION

XXIII National Telecommunications and Information Administration, Department of Commerce (Parts 2300—2399)

Title 16—Commercial Practices

I Federal Trade Commission (Parts 0—999)

II Consumer Product Safety Commission (Parts 1000—1799)

Title 17—Commodity and Securities Exchanges

I Commodity Futures Trading Commission (Parts 1—199)

II Securities and Exchange Commission (Parts 200—399)

IV Department of the Treasury (Parts 400—499)

Title 18—Conservation of Power and Water Resources

I Federal Energy Regulatory Commission, Department of Energy (Parts 1—399)

III Delaware River Basin Commission (Parts 400—499)

VI Water Resources Council (Parts 700—799)

Title 18—Conservation of Power and Water Resources—Continued

Chap.

VIII Susquehanna River Basin Commission (Parts 800—899)

XIII Tennessee Valley Authority (Parts 1300—1399)

Title 19—Customs Duties

I U.S. Customs and Border Protection, Department of Homeland Security; Department of the Treasury (Parts 0—199)

II United States International Trade Commission (Parts 200—299)

III International Trade Administration, Department of Commerce (Parts 300—399)

IV U.S. Immigration and Customs Enforcement, Department of Homeland Security (Parts 400—599)

Title 20—Employees' Benefits

I Office of Workers' Compensation Programs, Department of Labor (Parts 1—199)

II Railroad Retirement Board (Parts 200—399)

III Social Security Administration (Parts 400—499)

IV Employees Compensation Appeals Board, Department of Labor (Parts 500—599)

V Employment and Training Administration, Department of Labor (Parts 600—699)

VI Employment Standards Administration, Department of Labor (Parts 700—799)

VII Benefits Review Board, Department of Labor (Parts 800—899)

VIII Joint Board for the Enrollment of Actuaries (Parts 900—999)

IX Office of the Assistant Secretary for Veterans' Employment and Training Service, Department of Labor (Parts 1000—1099)

Title 21—Food and Drugs

I Food and Drug Administration, Department of Health and Human Services (Parts 1—1299)

II Drug Enforcement Administration, Department of Justice (Parts 1300—1399)

III Office of National Drug Control Policy (Parts 1400—1499)

Title 22—Foreign Relations

I Department of State (Parts 1—199)

II Agency for International Development (Parts 200—299)

III Peace Corps (Parts 300—399)

IV International Joint Commission, United States and Canada (Parts 400—499)

V Broadcasting Board of Governors (Parts 500—599)

VII Overseas Private Investment Corporation (Parts 700—799)

IX Foreign Service Grievance Board (Parts 900—999)

Title 22—Foreign Relations—Continued

Chap.

X Inter-American Foundation (Parts 1000—1099)

XI International Boundary and Water Commission, United States and Mexico, United States Section (Parts 1100—1199)

XII United States International Development Cooperation Agency (Parts 1200—1299)

XIII Millenium Challenge Corporation (Parts 1300—1399)

XIV Foreign Service Labor Relations Board; Federal Labor Relations Authority; General Counsel of the Federal Labor Relations Authority; and the Foreign Service Impasse Disputes Panel (Parts 1400—1499)

XV African Development Foundation (Parts 1500—1599)

XVI Japan-United States Friendship Commission (Parts 1600—1699)

XVII United States Institute of Peace (Parts 1700—1799)

Title 23—Highways

I Federal Highway Administration, Department of Transportation (Parts 1—999)

II National Highway Traffic Safety Administration and Federal Highway Administration, Department of Transportation (Parts 1200—1299)

III National Highway Traffic Safety Administration, Department of Transportation (Parts 1300—1399)

Title 24—Housing and Urban Development

SUBTITLE A—OFFICE OF THE SECRETARY, DEPARTMENT OF HOUSING AND URBAN DEVELOPMENT (PARTS 0—99)

SUBTITLE B—REGULATIONS RELATING TO HOUSING AND URBAN DEVELOPMENT

I Office of Assistant Secretary for Equal Opportunity, Department of Housing and Urban Development (Parts 100—199)

II Office of Assistant Secretary for Housing-Federal HousingCommissioner, Department of Housing and Urban Development (Parts 200—299)

III Government National Mortgage Association, Department of Housing and Urban Development (Parts 300—399)

IV Office of Housing and Office of Multifamily Housing Assistance Restructuring, Department of Housing and Urban Development (Parts 400—499)

V Office of Assistant Secretary for Community Planning and Development, Department of Housing and Urban Development (Parts 500—599)

VI Office of Assistant Secretary for Community Planning and Development, Department of Housing and Urban Development (Parts 600—699) [Reserved]

VII Office of the Secretary, Department of Housing and Urban Development (Housing Assistance Programs and Public and Indian Housing Programs) (Parts 700—799)

Title 24—Housing and Urban Development—Continued

Chap.

VIII Office of the Assistant Secretary for Housing—Federal Housing Commissioner, Department of Housing and Urban Development (Section 8 Housing Assistance Programs, Section 202 Direct Loan Program, Section 202 Supportive Housing for the Elderly Program and Section 811 Supportive Housing for Persons With Disabilities Program) (Parts 800—899)

IX Office of Assistant Secretary for Public and Indian Housing, Department of Housing and Urban Development (Parts 900—1699)

X Office of Assistant Secretary for Housing—Federal Housing Commissioner, Department of Housing and Urban Development (Interstate Land Sales Registration Program) (Parts 1700—1799)

XII Office of Inspector General, Department of Housing and Urban Development (Parts 2000—2099)

XX Office of Assistant Secretary for Housing—Federal Housing Commissioner, Department of Housing and Urban Development (Parts 3200—3899)

XXIV Board of Directors of the HOPE for Homeowners Program (Parts 4000—4099)

XXV Neighborhood Reinvestment Corporation (Parts 4100—4199)

Title 25—Indians

I Bureau of Indian Affairs, Department of the Interior (Parts 1—299)

II Indian Arts and Crafts Board, Department of the Interior (Parts 300—399)

III National Indian Gaming Commission, Department of the Interior (Parts 500—599)

IV Office of Navajo and Hopi Indian Relocation (Parts 700—799)

V Bureau of Indian Affairs, Department of the Interior, and Indian Health Service, Department of Health and Human Services (Part 900)

VI Office of the Assistant Secretary-Indian Affairs, Department of the Interior (Parts 1000—1199)

VII Office of the Special Trustee for American Indians, Department of the Interior (Parts 1200—1299)

Title 26—Internal Revenue

I Internal Revenue Service, Department of the Treasury (Parts 1—899)

Title 27—Alcohol, Tobacco Products and Firearms

I Alcohol and Tobacco Tax and Trade Bureau, Department of the Treasury (Parts 1—399)

II Bureau of Alcohol, Tobacco, Firearms, and Explosives, Department of Justice (Parts 400—699)

Title 28—Judicial Administration

Chap.

I Department of Justice (Parts 0—299)

III Federal Prison Industries, Inc., Department of Justice (Parts 300—399)

V Bureau of Prisons, Department of Justice (Parts 500—599)

VI Offices of Independent Counsel, Department of Justice (Parts 600—699)

VII Office of Independent Counsel (Parts 700—799)

VIII Court Services and Offender Supervision Agency for the District of Columbia (Parts 800—899)

IX National Crime Prevention and Privacy Compact Council (Parts 900—999)

XI Department of Justice and Department of State (Parts 1100—1199)

Title 29—Labor

SUBTITLE A—OFFICE OF THE SECRETARY OF LABOR (PARTS 0—99)

SUBTITLE B—REGULATIONS RELATING TO LABOR

I National Labor Relations Board (Parts 100—199)

II Office of Labor-Management Standards, Department of Labor (Parts 200—299)

III National Railroad Adjustment Board (Parts 300—399)

IV Office of Labor-Management Standards, Department of Labor (Parts 400—499)

V Wage and Hour Division, Department of Labor (Parts 500—899)

IX Construction Industry Collective Bargaining Commission (Parts 900—999)

X National Mediation Board (Parts 1200—1299)

XII Federal Mediation and Conciliation Service (Parts 1400—1499)

XIV Equal Employment Opportunity Commission (Parts 1600—1699)

XVII Occupational Safety and Health Administration, Department of Labor (Parts 1900—1999)

XX Occupational Safety and Health Review Commission (Parts 2200—2499)

XXV Employee Benefits Security Administration, Department of Labor (Parts 2500—2599)

XXVII Federal Mine Safety and Health Review Commission (Parts 2700—2799)

XL Pension Benefit Guaranty Corporation (Parts 4000—4999)

Title 30—Mineral Resources

I Mine Safety and Health Administration, Department of Labor (Parts 1—199)

II Minerals Management Service, Department of the Interior (Parts 200—299)

III Board of Surface Mining and Reclamation Appeals, Department of the Interior (Parts 300—399)

Title 30—Mineral Resources—Continued

Chap.

IV Geological Survey, Department of the Interior (Parts 400—499)

VII Office of Surface Mining Reclamation and Enforcement, Department of the Interior (Parts 700—999)

Title 31—Money and Finance: Treasury

SUBTITLE A—OFFICE OF THE SECRETARY OF THE TREASURY (PARTS 0—50)

SUBTITLE B—REGULATIONS RELATING TO MONEY AND FINANCE

I Monetary Offices, Department of the Treasury (Parts 51—199)

II Fiscal Service, Department of the Treasury (Parts 200—399)

IV Secret Service, Department of the Treasury (Parts 400—499)

V Office of Foreign Assets Control, Department of the Treasury (Parts 500—599)

VI Bureau of Engraving and Printing, Department of the Treasury (Parts 600—699)

VII Federal Law Enforcement Training Center, Department of the Treasury (Parts 700—799)

VIII Office of International Investment, Department of the Treasury (Parts 800—899)

IX Federal Claims Collection Standards (Department of the Treasury—Department of Justice) (Parts 900—999)

Title 32—National Defense

SUBTITLE A—DEPARTMENT OF DEFENSE

I Office of the Secretary of Defense (Parts 1—399)

V Department of the Army (Parts 400—699)

VI Department of the Navy (Parts 700—799)

VII Department of the Air Force (Parts 800—1099)

SUBTITLE B—OTHER REGULATIONS RELATING TO NATIONAL DEFENSE

XII Defense Logistics Agency (Parts 1200—1299)

XVI Selective Service System (Parts 1600—1699)

XVII Office of the Director of National Intelligence (Parts 1700—1799)

XVIII National Counterintelligence Center (Parts 1800—1899)

XIX Central Intelligence Agency (Parts 1900—1999)

XX Information Security Oversight Office, National Archives and Records Administration (Parts 2000—2099)

XXI National Security Council (Parts 2100—2199)

XXIV Office of Science and Technology Policy (Parts 2400—2499)

XXVII Office for Micronesian Status Negotiations (Parts 2700—2799)

XXVIII Office of the Vice President of the United States (Parts 2800—2899)

Title 33—Navigation and Navigable Waters

I Coast Guard, Department of Homeland Security (Parts 1—199)

Title 33—Navigation and Navigable Waters—Continued

Chap.

II Corps of Engineers, Department of the Army (Parts 200—399)

IV Saint Lawrence Seaway Development Corporation, Department of Transportation (Parts 400—499)

Title 34—Education

SUBTITLE A—OFFICE OF THE SECRETARY, DEPARTMENT OF EDUCATION (PARTS 1—99)

SUBTITLE B—REGULATIONS OF THE OFFICES OF THE DEPARTMENT OF EDUCATION

I Office for Civil Rights, Department of Education (Parts 100—199)

II Office of Elementary and Secondary Education, Department of Education (Parts 200—299)

III Office of Special Education and Rehabilitative Services, Department of Education (Parts 300—399)

IV Office of Vocational and Adult Education, Department of Education (Parts 400—499)

V Office of Bilingual Education and Minority Languages Affairs, Department of Education (Parts 500—599)

VI Office of Postsecondary Education, Department of Education (Parts 600—699)

VII Office of Educational Research and Improvmeent, Department of Education [Reserved]

XI National Institute for Literacy (Parts 1100—1199)

SUBTITLE C—REGULATIONS RELATING TO EDUCATION

XII National Council on Disability (Parts 1200—1299)

Title 35 [Reserved]

Title 36—Parks, Forests, and Public Property

I National Park Service, Department of the Interior (Parts 1—199)

II Forest Service, Department of Agriculture (Parts 200—299)

III Corps of Engineers, Department of the Army (Parts 300—399)

IV American Battle Monuments Commission (Parts 400—499)

V Smithsonian Institution (Parts 500—599)

VI [Reserved]

VII Library of Congress (Parts 700—799)

VIII Advisory Council on Historic Preservation (Parts 800—899)

IX Pennsylvania Avenue Development Corporation (Parts 900—999)

X Presidio Trust (Parts 1000—1099)

XI Architectural and Transportation Barriers Compliance Board (Parts 1100—1199)

XII National Archives and Records Administration (Parts 1200—1299)

XV Oklahoma City National Memorial Trust (Parts 1500—1599)

XVI Morris K. Udall Scholarship and Excellence in National Environmental Policy Foundation (Parts 1600—1699)

Title 37—Patents, Trademarks, and Copyrights

Chap.

I United States Patent and Trademark Office, Department of Commerce (Parts 1—199)

II Copyright Office, Library of Congress (Parts 200—299)

III Copyright Royalty Board, Library of Congress (Parts 301—399)

IV Assistant Secretary for Technology Policy, Department of Commerce (Parts 400—499)

V Under Secretary for Technology, Department of Commerce (Parts 500—599)

Title 38—Pensions, Bonuses, and Veterans' Relief

I Department of Veterans Affairs (Parts 0—99)

II Armed Forces Retirement Home

Title 39—Postal Service

I United States Postal Service (Parts 1—999)

III Postal Regulatory Commission (Parts 3000—3099)

Title 40—Protection of Environment

I Environmental Protection Agency (Parts 1—1099)

IV Environmental Protection Agency and Department of Justice (Parts 1400—1499)

V Council on Environmental Quality (Parts 1500—1599)

VI Chemical Safety and Hazard Investigation Board (Parts 1600—1699)

VII Environmental Protection Agency and Department of Defense; Uniform National Discharge Standards for Vessels of the Armed Forces (Parts 1700—1799)

Title 41—Public Contracts and Property Management

SUBTITLE B—OTHER PROVISIONS RELATING TO PUBLIC CONTRACTS

50 Public Contracts, Department of Labor (Parts 50–1—50–999)

51 Committee for Purchase From People Who Are Blind or Severely Disabled (Parts 51–1—51–99)

60 Office of Federal Contract Compliance Programs, Equal Employment Opportunity, Department of Labor (Parts 60–1—60–999)

61 Office of the Assistant Secretary for Veterans' Employment and Training Service, Department of Labor (Parts 61–1—61–999)

Chapters 62—100 [Reserved]

SUBTITLE C—FEDERAL PROPERTY MANAGEMENT REGULATIONS SYSTEM

101 Federal Property Management Regulations (Parts 101–1—101–99)

102 Federal Management Regulation (Parts 102–1—102–299)

Chapters 103—104 [Reserved]

105 General Services Administration (Parts 105–1—105–999)

Title 41—Public Contracts and Property Management—Continued

Chap.

109 Department of Energy Property Management Regulations (Parts 109–1—109–99)

114 Department of the Interior (Parts 114–1—114–99)

115 Environmental Protection Agency (Parts 115–1—115–99)

128 Department of Justice (Parts 128–1—128–99)

Chapters 129—200 [Reserved]

SUBTITLE D—OTHER PROVISIONS RELATING TO PROPERTY MANAGEMENT [RESERVED]

SUBTITLE E—FEDERAL INFORMATION RESOURCES MANAGEMENT REGULATIONS SYSTEM [RESERVED]

SUBTITLE F—FEDERAL TRAVEL REGULATION SYSTEM

300 General (Parts 300–1—300–99)

301 Temporary Duty (TDY) Travel Allowances (Parts 301–1—301–99)

302 Relocation Allowances (Parts 302–1—302–99)

303 Payment of Expenses Connected with the Death of Certain Employees (Part 303–1—303–99)

304 Payment of Travel Expenses from a Non-Federal Source (Parts 304–1—304–99)

Title 42—Public Health

I Public Health Service, Department of Health and Human Services (Parts 1—199)

IV Centers for Medicare & Medicaid Services, Department of Health and Human Services (Parts 400—499)

V Office of Inspector General-Health Care, Department of Health and Human Services (Parts 1000—1999)

Title 43—Public Lands: Interior

SUBTITLE A—OFFICE OF THE SECRETARY OF THE INTERIOR (PARTS 1—199)

SUBTITLE B—REGULATIONS RELATING TO PUBLIC LANDS

I Bureau of Reclamation, Department of the Interior (Parts 200—499)

II Bureau of Land Management, Department of the Interior (Parts 1000—9999)

III Utah Reclamation Mitigation and Conservation Commission (Parts 10000—10010)

Title 44—Emergency Management and Assistance

I Federal Emergency Management Agency, Department of Homeland Security (Parts 0—399)

IV Department of Commerce and Department of Transportation (Parts 400—499)

Title 45—Public Welfare

Chap.

SUBTITLE A—DEPARTMENT OF HEALTH AND HUMAN SERVICES (PARTS 1—199)

SUBTITLE B—REGULATIONS RELATING TO PUBLIC WELFARE

II Office of Family Assistance (Assistance Programs), Administration for Children and Families, Department of Health and Human Services (Parts 200—299)

III Office of Child Support Enforcement (Child Support Enforcement Program), Administration for Children and Families, Department of Health and Human Services (Parts 300—399)

IV Office of Refugee Resettlement, Administration for Children and Families, Department of Health and Human Services (Parts 400—499)

V Foreign Claims Settlement Commission of the United States, Department of Justice (Parts 500—599)

VI National Science Foundation (Parts 600—699)

VII Commission on Civil Rights (Parts 700—799)

VIII Office of Personnel Management (Parts 800—899) [Reserved]

X Office of Community Services, Administration for Children and Families, Department of Health and Human Services (Parts 1000—1099)

XI National Foundation on the Arts and the Humanities (Parts 1100—1199)

XII Corporation for National and Community Service (Parts 1200—1299)

XIII Office of Human Development Services, Department of Health and Human Services (Parts 1300—1399)

XVI Legal Services Corporation (Parts 1600—1699)

XVII National Commission on Libraries and Information Science (Parts 1700—1799)

XVIII Harry S. Truman Scholarship Foundation (Parts 1800—1899)

XXI Commission on Fine Arts (Parts 2100—2199)

XXIII Arctic Research Commission (Part 2301)

XXIV James Madison Memorial Fellowship Foundation (Parts 2400—2499)

XXV Corporation for National and Community Service (Parts 2500—2599)

Title 46—Shipping

I Coast Guard, Department of Homeland Security (Parts 1—199)

II Maritime Administration, Department of Transportation (Parts 200—399)

III Coast Guard (Great Lakes Pilotage), Department of Homeland Security (Parts 400—499)

IV Federal Maritime Commission (Parts 500—599)

Title 47—Telecommunication

I Federal Communications Commission (Parts 0—199)

Title 47—Telecommunication—Continued

Chap.

II Office of Science and Technology Policy and National Security Council (Parts 200—299)

III National Telecommunications and Information Administration, Department of Commerce (Parts 300—399)

IV National Telecommunications and Information Administration, Department of Commerce, and National Highway Traffic Safety Administration, Department of Transportation (Parts 400—499)

Title 48—Federal Acquisition Regulations System

1 Federal Acquisition Regulation (Parts 1—99)

2 Defense Acquisition Regulations System, Department of Defense (Parts 200—299)

3 Health and Human Services (Parts 300—399)

4 Department of Agriculture (Parts 400—499)

5 General Services Administration (Parts 500—599)

6 Department of State (Parts 600—699)

7 Agency for International Development (Parts 700—799)

8 Department of Veterans Affairs (Parts 800—899)

9 Department of Energy (Parts 900—999)

10 Department of the Treasury (Parts 1000—1099)

12 Department of Transportation (Parts 1200—1299)

13 Department of Commerce (Parts 1300—1399)

14 Department of the Interior (Parts 1400—1499)

15 Environmental Protection Agency (Parts 1500—1599)

16 Office of Personnel Management, Federal Employees Health Benefits Acquisition Regulation (Parts 1600—1699)

17 Office of Personnel Management (Parts 1700—1799)

18 National Aeronautics and Space Administration (Parts 1800—1899)

19 Broadcasting Board of Governors (Parts 1900—1999)

20 Nuclear Regulatory Commission (Parts 2000—2099)

21 Office of Personnel Management, Federal Employees Group Life Insurance Federal Acquisition Regulation (Parts 2100—2199)

23 Social Security Administration (Parts 2300—2399)

24 Department of Housing and Urban Development (Parts 2400—2499)

25 National Science Foundation (Parts 2500—2599)

28 Department of Justice (Parts 2800—2899)

29 Department of Labor (Parts 2900—2999)

30 Department of Homeland Security, Homeland Security Acquisition Regulation (HSAR) (Parts 3000—3099)

34 Department of Education Acquisition Regulation (Parts 3400—3499)

51 Department of the Army Acquisition Regulations (Parts 5100—5199)

Chap.

52 Department of the Navy Acquisition Regulations (Parts 5200—5299)

53 Department of the Air Force Federal Acquisition Regulation Supplement [Reserved]

54 Defense Logistics Agency, Department of Defense (Parts 5400—5499)

57 African Development Foundation (Parts 5700—5799)

61 Civilian Board of Contract Appeals, General Services Administration (Parts 6100—6199)

63 Department of Transportation Board of Contract Appeals (Parts 6300—6399)

99 Cost Accounting Standards Board, Office of Federal Procurement Policy, Office of Management and Budget (Parts 9900—9999)

Title 49—Transportation

SUBTITLE A—OFFICE OF THE SECRETARY OF TRANSPORTATION (PARTS 1—99)

SUBTITLE B—OTHER REGULATIONS RELATING TO TRANSPORTATION

I Pipeline and Hazardous Materials Safety Administration, Department of Transportation (Parts 100—199)

II Federal Railroad Administration, Department of Transportation (Parts 200—299)

III Federal Motor Carrier Safety Administration, Department of Transportation (Parts 300—399)

IV Coast Guard, Department of Homeland Security (Parts 400—499)

V National Highway Traffic Safety Administration, Department of Transportation (Parts 500—599)

VI Federal Transit Administration, Department of Transportation (Parts 600—699)

VII National Railroad Passenger Corporation (AMTRAK) (Parts 700—799)

VIII National Transportation Safety Board (Parts 800—999)

X Surface Transportation Board, Department of Transportation (Parts 1000—1399)

XI Research and Innovative Technology Administration, Department of Transportation [Reserved]

XII Transportation Security Administration, Department of Homeland Security (Parts 1500—1699)

Title 50—Wildlife and Fisheries

I United States Fish and Wildlife Service, Department of the Interior (Parts 1—199)

II National Marine Fisheries Service, National Oceanic and Atmospheric Administration, Department of Commerce (Parts 200—299)

III International Fishing and Related Activities (Parts 300—399)

Title 50—Wildlife and Fisheries—Continued

Chap.

IV Joint Regulations (United States Fish and Wildlife Service, Department of the Interior and National Marine Fisheries Service, National Oceanic and Atmospheric Administration, Department of Commerce); Endangered Species Committee Regulations (Parts 400—499)

V Marine Mammal Commission (Parts 500—599)

VI Fishery Conservation and Management, National Oceanic and Atmospheric Administration, Department of Commerce (Parts 600—699)

CFR Index and Finding Aids

Subject/Agency Index

List of Agency Prepared Indexes

Parallel Tables of Statutory Authorities and Rules

List of CFR Titles, Chapters, Subchapters, and Parts

Alphabetical List of Agencies Appearing in the CFR

Alphabetical List of Agencies Appearing in the CFR

(Revised as of July 1, 2010)

Agency	CFR Title, Subtitle or Chapter
Administrative Committee of the Federal Register	1, I
Advanced Research Projects Agency	32, I
Advisory Council on Historic Preservation	36, VIII
African Development Foundation	22, XV
Federal Acquisition Regulation	48, 57
Agency for International Development	22, II
Federal Acquisition Regulation	48, 7
Agricultural Marketing Service	7, I, IX, X, XI
Agricultural Research Service	7, V
Agriculture Department	5, LXXIII
Agricultural Marketing Service	7, I, IX, X, XI
Agricultural Research Service	7, V
Animal and Plant Health Inspection Service	7, III; 9, I
Chief Financial Officer, Office of	7, XXX
Commodity Credit Corporation	7, XIV
Economic Research Service	7, XXXVII
Energy Policy and New Uses, Office of	2, IX; 7, XXIX
Environmental Quality, Office of	7, XXXI
Farm Service Agency	7, VII, XVIII
Federal Acquisition Regulation	48, 4
Federal Crop Insurance Corporation	7, IV
Food and Nutrition Service	7, II
Food Safety and Inspection Service	9, III
Foreign Agricultural Service	7, XV
Forest Service	36, II
Grain Inspection, Packers and Stockyards Administration	7, VIII; 9, II
Information Resources Management, Office of	7, XXVII
Inspector General, Office of	7, XXVI
National Agricultural Library	7, XLI
National Agricultural Statistics Service	7, XXXVI
National Institute of Food and Agriculture.	7, XXXIV
Natural Resources Conservation Service	7, VI
Operations, Office of	7, XXVIII
Procurement and Property Management, Office of	7, XXXII
Rural Business-Cooperative Service	7, XVIII, XLII, L
Rural Development Administration	7, XLII
Rural Housing Service	7, XVIII, XXXV, L
Rural Telephone Bank	7, XVI
Rural Utilities Service	7, XVII, XVIII, XLII, L
Secretary of Agriculture, Office of	7, Subtitle A
Transportation, Office of	7, XXXIII
World Agricultural Outlook Board	7, XXXVIII
Air Force Department	32, VII
Federal Acquisition Regulation Supplement	48, 53
Air Transportation Stabilization Board	14, VI
Alcohol and Tobacco Tax and Trade Bureau	27, I
Alcohol, Tobacco, Firearms, and Explosives, Bureau of	27, II
AMTRAK	49, VII
American Battle Monuments Commission	36, IV
American Indians, Office of the Special Trustee	25, VII
Animal and Plant Health Inspection Service	7, III; 9, I
Appalachian Regional Commission	5, IX
Architectural and Transportation Barriers Compliance Board	36, XI

Agency	CFR Title, Subtitle or Chapter
Arctic Research Commission	45, XXIII
Armed Forces Retirement Home	5, XI
Army Department	32, V
Engineers, Corps of	33, II; 36, III
Federal Acquisition Regulation	48, 51
Benefits Review Board	20, VII
Bilingual Education and Minority Languages Affairs, Office of	34, V
Blind or Severely Disabled, Committee for Purchase From People Who Are	41, 51
Broadcasting Board of Governors	22, V
Federal Acquisition Regulation	48, 19
Census Bureau	15, I
Centers for Medicare & Medicaid Services	42, IV
Central Intelligence Agency	32, XIX
Chief Financial Officer, Office of	7, XXX
Child Support Enforcement, Office of	45, III
Children and Families, Administration for	45, II, III, IV, X
Civil Rights, Commission on	5, LXVIII; 45, VII
Civil Rights, Office for	34, I
Coast Guard	33, I; 46, I; 49, IV
Coast Guard (Great Lakes Pilotage)	46, III
Commerce Department	44, IV
Census Bureau	15, I
Economic Affairs, Under Secretary	37, V
Economic Analysis, Bureau of	15, VIII
Economic Development Administration	13, III
Emergency Management and Assistance	44, IV
Federal Acquisition Regulation	48, 13
Fishery Conservation and Management	50, VI
Foreign-Trade Zones Board	15, IV
Industry and Security, Bureau of	15, VII
International Trade Administration	15, III; 19, III
National Institute of Standards and Technology	15, II
National Marine Fisheries Service	50, II, IV, VI
National Oceanic and Atmospheric Administration	15, IX; 50, II, III, IV, VI
National Telecommunications and Information Administration	15, XXIII; 47, III, IV
National Weather Service	15, IX
Patent and Trademark Office, United States	37, I
Productivity, Technology and Innovation, Assistant Secretary for	37, IV
Secretary of Commerce, Office of	15, Subtitle A
Technology, Under Secretary for	37, V
Technology Administration	15, XI
Technology Policy, Assistant Secretary for	37, IV
Commercial Space Transportation	14, III
Commodity Credit Corporation	7, XIV
Commodity Futures Trading Commission	5, XLI; 17, I
Community Planning and Development, Office of Assistant Secretary for	24, V, VI
Community Services, Office of	45, X
Comptroller of the Currency	12, I
Construction Industry Collective Bargaining Commission	29, IX
Consumer Product Safety Commission	5, LXXI; 16, II
Copyright Office	37, II
Copyright Royalty Board	37, III
Corporation for National and Community Service	2, XXII; 45, XII, XXV
Cost Accounting Standards Board	48, 99
Council on Environmental Quality	40, V
Court Services and Offender Supervision Agency for the District of Columbia	28, VIII
Customs and Border Protection Bureau	19, I
Defense Contract Audit Agency	32, I
Defense Department	5, XXVI; 32, Subtitle A; 40, VII
Advanced Research Projects Agency	32, I
Air Force Department	32, VII

Agency	CFR Title, Subtitle or Chapter
Army Department	32, V; 33, II; 36, III, 48, 51
Defense Acquisition Regulations System	48, 2
Defense Intelligence Agency	32, I
Defense Logistics Agency	32, I, XII; 48, 54
Engineers, Corps of	33, II; 36, III
Human Resources Management and Labor Relations Systems	5, XCIX
National Imagery and Mapping Agency	32, I
Navy Department	32, VI; 48, 52
Secretary of Defense, Office of	2, XI; 32, I
Defense Contract Audit Agency	32, I
Defense Intelligence Agency	32, I
Defense Logistics Agency	32, XII; 48, 54
Defense Nuclear Facilities Safety Board	10, XVII
Delaware River Basin Commission	18, III
District of Columbia, Court Services and Offender Supervision Agency for the	28, VIII
Drug Enforcement Administration	21, II
East-West Foreign Trade Board	15, XIII
Economic Affairs, Under Secretary	37, V
Economic Analysis, Bureau of	15, VIII
Economic Development Administration	13, III
Economic Research Service	7, XXXVII
Education, Department of	5, LIII
Bilingual Education and Minority Languages Affairs, Office of	34, V
Civil Rights, Office for	34, I
Educational Research and Improvement, Office of	34, VII
Elementary and Secondary Education, Office of	34, II
Federal Acquisition Regulation	48, 34
Postsecondary Education, Office of	34, VI
Secretary of Education, Office of	34, Subtitle A
Special Education and Rehabilitative Services, Office of	34, III
Vocational and Adult Education, Office of	34, IV
Educational Research and Improvement, Office of	34, VII
Election Assistance Commission	11, II
Elementary and Secondary Education, Office of	34, II
Emergency Oil and Gas Guaranteed Loan Board	13, V
Emergency Steel Guarantee Loan Board	13, IV
Employee Benefits Security Administration	29, XXV
Employees' Compensation Appeals Board	20, IV
Employees Loyalty Board	5, V
Employment and Training Administration	20, V
Employment Standards Administration	20, VI
Endangered Species Committee	50, IV
Energy, Department of	5, XXIII; 10, II, III, X
Federal Acquisition Regulation	48, 9
Federal Energy Regulatory Commission	5, XXIV; 18, I
Property Management Regulations	41, 109
Energy, Office of	7, XXIX
Engineers, Corps of	33, II; 36, III
Engraving and Printing, Bureau of	31, VI
Environmental Protection Agency	2, XV; 5, LIV; 40, I, IV, VII
Federal Acquisition Regulation	48, 15
Property Management Regulations	41, 115
Environmental Quality, Office of	7, XXXI
Equal Employment Opportunity Commission	5, LXII; 29, XIV
Equal Opportunity, Office of Assistant Secretary for	24, I
Executive Office of the President	3, I
Administration, Office of	5, XV
Environmental Quality, Council on	40, V
Management and Budget, Office of	5, III, LXXVII; 14, VI; 48, 99
National Drug Control Policy, Office of	21, III
National Security Council	32, XXI; 47, 2

Agency	CFR Title, Subtitle or Chapter
Presidential Documents	3
Science and Technology Policy, Office of	32, XXIV; 47, II
Trade Representative, Office of the United States	15, XX
Export-Import Bank of the United States	2, XXXV; 5, LII; 12, IV
Family Assistance, Office of	45, II
Farm Credit Administration	5, XXXI; 12, VI
Farm Credit System Insurance Corporation	5, XXX; 12, XIV
Farm Service Agency	7, VII, XVIII
Federal Acquisition Regulation	48, 1
Federal Aviation Administration	14, I
Commercial Space Transportation	14, III
Federal Claims Collection Standards	31, IX
Federal Communications Commission	5, XXIX; 47, I
Federal Contract Compliance Programs, Office of	41, 60
Federal Crop Insurance Corporation	7, IV
Federal Deposit Insurance Corporation	5, XXII; 12, III
Federal Election Commission	11, I
Federal Emergency Management Agency	44, I
Federal Employees Group Life Insurance Federal Acquisition Regulation	48, 21
Federal Employees Health Benefits Acquisition Regulation	48, 16
Federal Energy Regulatory Commission	5, XXIV; 18, I
Federal Financial Institutions Examination Council	12, XI
Federal Financing Bank	12, VIII
Federal Highway Administration	23, I, II
Federal Home Loan Mortgage Corporation	1, IV
Federal Housing Enterprise Oversight Office	12, XVII
Federal Housing Finance Agency	12, XII
Federal Housing Finance Board	12, IX
Federal Labor Relations Authority, and General Counsel of the Federal Labor Relations Authority	5, XIV; 22, XIV
Federal Law Enforcement Training Center	31, VII
Federal Management Regulation	41, 102
Federal Maritime Commission	46, IV
Federal Mediation and Conciliation Service	29, XII
Federal Mine Safety and Health Review Commission	5, LXXIV; 29, XXVII
Federal Motor Carrier Safety Administration	49, III
Federal Prison Industries, Inc.	28, III
Federal Procurement Policy Office	48, 99
Federal Property Management Regulations	41, 101
Federal Railroad Administration	49, II
Federal Register, Administrative Committee of	1, I
Federal Register, Office of	1, II
Federal Reserve System	12, II
Board of Governors	5, LVIII
Federal Retirement Thrift Investment Board	5, VI, LXXVI
Federal Service Impasses Panel	5, XIV
Federal Trade Commission	5, XLVII; 16, I
Federal Transit Administration	49, VI
Federal Travel Regulation System	41, Subtitle F
Fine Arts, Commission on	45, XXI
Fiscal Service	31, II
Fish and Wildlife Service, United States	50, I, IV
Fishery Conservation and Management	50, VI
Food and Drug Administration	21, I
Food and Nutrition Service	7, II
Food Safety and Inspection Service	9, III
Foreign Agricultural Service	7, XV
Foreign Assets Control, Office of	31, V
Foreign Claims Settlement Commission of the United States	45, V
Foreign Service Grievance Board	22, IX
Foreign Service Impasse Disputes Panel	22, XIV
Foreign Service Labor Relations Board	22, XIV
Foreign-Trade Zones Board	15, IV
Forest Service	36, II
General Services Administration	5, LVII; 41, 105
Contract Appeals, Board of	48, 61

Agency	CFR Title, Subtitle or Chapter
Federal Acquisition Regulation	48, 5
Federal Management Regulation	41, 102
Federal Property Management Regulations	41, 101
Federal Travel Regulation System	41, Subtitle F
General	41, 300
Payment From a Non-Federal Source for Travel Expenses	41, 304
Payment of Expenses Connected With the Death of Certain Employees	41, 303
Relocation Allowances	41, 302
Temporary Duty (TDY) Travel Allowances	41, 301
Geological Survey	30, IV
Government Accountability Office	4, I
Government Ethics, Office of	5, XVI
Government National Mortgage Association	24, III
Grain Inspection, Packers and Stockyards Administration	7, VIII; 9, II
Harry S. Truman Scholarship Foundation	45, XVIII
Health and Human Services, Department of	2, III; 5, XLV; 45, Subtitle A,
Centers for Medicare & Medicaid Services	42, IV
Child Support Enforcement, Office of	45, III
Children and Families, Administration for	45, II, III, IV, X
Community Services, Office of	45, X
Family Assistance, Office of	45, II
Federal Acquisition Regulation	48, 3
Food and Drug Administration	21, I
Human Development Services, Office of	45, XIII
Indian Health Service	25, V
Inspector General (Health Care), Office of	42, V
Public Health Service	42, I
Refugee Resettlement, Office of	45, IV
Homeland Security, Department of	2, XXX; 6, I
Coast Guard	33, I; 46, I; 49, IV
Coast Guard (Great Lakes Pilotage)	46, III
Customs and Border Protection Bureau	19, I
Federal Emergency Management Agency	44, I
Human Resources Management and Labor Relations Systems	5, XCVII
Immigration and Customs Enforcement Bureau	19, IV
Immigration and Naturalization	8, I
Transportation Security Administration	49, XII
HOPE for Homeowners Program, Board of Directors of	24, XXIV
Housing and Urban Development, Department of	2, XXIV; 5, LXV; 24, Subtitle B
Community Planning and Development, Office of Assistant Secretary for	24, V, VI
Equal Opportunity, Office of Assistant Secretary for	24, I
Federal Acquisition Regulation	48, 24
Federal Housing Enterprise Oversight, Office of	12, XVII
Government National Mortgage Association	24, III
Housing—Federal Housing Commissioner, Office of Assistant Secretary for	24, II, VIII, X, XX
Housing, Office of, and Multifamily Housing Assistance Restructuring, Office of	24, IV
Inspector General, Office of	24, XII
Public and Indian Housing, Office of Assistant Secretary for	24, IX
Secretary, Office of	24, Subtitle A, VII
Housing—Federal Housing Commissioner, Office of Assistant Secretary for	24, II, VIII, X, XX
Housing, Office of, and Multifamily Housing Assistance Restructuring, Office of	24, IV
Human Development Services, Office of	45, XIII
Immigration and Customs Enforcement Bureau	19, IV
Immigration and Naturalization	8, I
Immigration Review, Executive Office for	8, V
Independent Counsel, Office of	28, VII
Indian Affairs, Bureau of	25, I, V
Indian Affairs, Office of the Assistant Secretary	25, VI

Agency	CFR Title, Subtitle or Chapter
Indian Arts and Crafts Board	25, II
Indian Health Service	25, V
Industry and Security, Bureau of	15, VII
Information Resources Management, Office of	7, XXVII
Information Security Oversight Office, National Archives and Records Administration	32, XX
Inspector General	
Agriculture Department	7, XXVI
Health and Human Services Department	42, V
Housing and Urban Development Department	24, XII
Institute of Peace, United States	22, XVII
Inter-American Foundation	5, LXIII; 22, X
Interior Department	
American Indians, Office of the Special Trustee	25, VII
Endangered Species Committee	50, IV
Federal Acquisition Regulation	48, 14
Federal Property Management Regulations System	41, 114
Fish and Wildlife Service, United States	50, I, IV
Geological Survey	30, IV
Indian Affairs, Bureau of	25, I, V
Indian Affairs, Office of the Assistant Secretary	25, VI
Indian Arts and Crafts Board	25, II
Land Management, Bureau of	43, II
Minerals Management Service	30, II
National Indian Gaming Commission	25, III
National Park Service	36, I
Reclamation, Bureau of	43, I
Secretary of the Interior, Office of	2, XIV; 43, Subtitle A
Surface Mining and Reclamation Appeals, Board of	30, III
Surface Mining Reclamation and Enforcement, Office of	30, VII
Internal Revenue Service	26, I
International Boundary and Water Commission, United States and Mexico, United States Section	22, XI
International Development, United States Agency for	22, II
Federal Acquisition Regulation	48, 7
International Development Cooperation Agency, United States	22, XII
International Fishing and Related Activities	50, III
International Joint Commission, United States and Canada	22, IV
International Organizations Employees Loyalty Board	5, V
International Trade Administration	15, III; 19, III
International Trade Commission, United States	19, II
Interstate Commerce Commission	5, XL
Investment Security, Office of	31, VIII
James Madison Memorial Fellowship Foundation	45, XXIV
Japan–United States Friendship Commission	22, XVI
Joint Board for the Enrollment of Actuaries	20, VIII
Justice Department	2, XXVII; 5, XXVIII; 28, I, XI; 40, IV
Alcohol, Tobacco, Firearms, and Explosives, Bureau of	27, II
Drug Enforcement Administration	21, II
Federal Acquisition Regulation	48, 28
Federal Claims Collection Standards	31, IX
Federal Prison Industries, Inc.	28, III
Foreign Claims Settlement Commission of the United States	45, V
Immigration Review, Executive Office for	8, V
Offices of Independent Counsel	28, VI
Prisons, Bureau of	28, V
Property Management Regulations	41, 128
Labor Department	5, XLII
Benefits Review Board	20, VII
Employee Benefits Security Administration	29, XXV
Employees' Compensation Appeals Board	20, IV
Employment and Training Administration	20, V
Employment Standards Administration	20, VI
Federal Acquisition Regulation	48, 29

Agency	CFR Title, Subtitle or Chapter
Federal Contract Compliance Programs, Office of	41, 60
Federal Procurement Regulations System	41, 50
Labor-Management Standards, Office of	29, II, IV
Mine Safety and Health Administration	30, I
Occupational Safety and Health Administration	29, XVII
Public Contracts	41, 50
Secretary of Labor, Office of	29, Subtitle A
Veterans' Employment and Training Service, Office of the Assistant Secretary for	41, 61; 20, IX
Wage and Hour Division	29, V
Workers' Compensation Programs, Office of	20, I
Labor-Management Standards, Office of	29, II, IV
Land Management, Bureau of	43, II
Legal Services Corporation	45, XVI
Library of Congress	36, VII
Copyright Office	37, II
Copyright Royalty Board	37, III
Local Television Loan Guarantee Board	7, XX
Management and Budget, Office of	5, III, LXXVII; 14, VI; 48, 99
Marine Mammal Commission	50, V
Maritime Administration	46, II
Merit Systems Protection Board	5, II, LXIV
Micronesian Status Negotiations, Office for	32, XXVII
Millenium Challenge Corporation	22, XIII
Mine Safety and Health Administration	30, I
Minerals Management Service	30, II
Minority Business Development Agency	15, XIV
Miscellaneous Agencies	1, IV
Monetary Offices	31, I
Morris K. Udall Scholarship and Excellence in National Environmental Policy Foundation	36, XVI
Museum and Library Services, Institute of	2, XXXI
National Aeronautics and Space Administration	2, XVIII; 5, LIX; 14, V
Federal Acquisition Regulation	48, 18
National Agricultural Library	7, XLI
National Agricultural Statistics Service	7, XXXVI
National and Community Service, Corporation for	45, XII, XXV
National Archives and Records Administration	2, XXVI; 5, LXVI; 36, XII
Information Security Oversight Office	32, XX
National Capital Planning Commission	1, IV
National Commission for Employment Policy	1, IV
National Commission on Libraries and Information Science	45, XVII
National Council on Disability	34, XII
National Counterintelligence Center	32, XVIII
National Credit Union Administration	12, VII
National Crime Prevention and Privacy Compact Council	28, IX
National Drug Control Policy, Office of	21, III
National Endowment for the Arts	2, XXXII
National Endowment for the Humanities	2, XXXIII
National Foundation on the Arts and the Humanities	45, XI
National Highway Traffic Safety Administration	23, II, III; 47, VI; 49, V
National Imagery and Mapping Agency	32, I
National Indian Gaming Commission	25, III
National Institute for Literacy	34, XI
National Institute of Food and Agriculture.	7, XXXIV
National Institute of Standards and Technology	15, II
National Intelligence, Office of Director of	32, XVII
National Labor Relations Board	5, LXI; 29, I
National Marine Fisheries Service	50, II, IV, VI
National Mediation Board	29, X
National Oceanic and Atmospheric Administration	15, IX; 50, II, III, IV, VI
National Park Service	36, I
National Railroad Adjustment Board	29, III
National Railroad Passenger Corporation (AMTRAK)	49, VII
National Science Foundation	2, XXV; 5, XLIII; 45, VI

Agency	CFR Title, Subtitle or Chapter
Federal Acquisition Regulation	48, 25
National Security Council	32, XXI
National Security Council and Office of Science and Technology Policy	47, II
National Telecommunications and Information Administration	15, XXIII; 47, III, IV
National Transportation Safety Board	49, VIII
Natural Resources Conservation Service	7, VI
Navajo and Hopi Indian Relocation, Office of	25, IV
Navy Department	32, VI
Federal Acquisition Regulation	48, 52
Neighborhood Reinvestment Corporation	24, XXV
Northeast Interstate Low-Level Radioactive Waste Commission	10, XVIII
Nuclear Regulatory Commission	5, XLVIII; 10, I
Federal Acquisition Regulation	48, 20
Occupational Safety and Health Administration	29, XVII
Occupational Safety and Health Review Commission	29, XX
Offices of Independent Counsel	28, VI
Oklahoma City National Memorial Trust	36, XV
Operations Office	7, XXVIII
Overseas Private Investment Corporation	5, XXXIII; 22, VII
Patent and Trademark Office, United States	37, I
Payment From a Non-Federal Source for Travel Expenses	41, 304
Payment of Expenses Connected With the Death of Certain Employees	41, 303
Peace Corps	22, III
Pennsylvania Avenue Development Corporation	36, IX
Pension Benefit Guaranty Corporation	29, XL
Personnel Management, Office of	5, I, XXXV; 45, VIII
Human Resources Management and Labor Relations Systems, Department of Defense	5, XCIX
Human Resources Management and Labor Relations Systems, Department of Homeland Security	5, XCVII
Federal Acquisition Regulation	48, 17
Federal Employees Group Life Insurance Federal Acquisition Regulation	48, 21
Federal Employees Health Benefits Acquisition Regulation	48, 16
Pipeline and Hazardous Materials Safety Administration	49, I
Postal Regulatory Commission	5, XLVI; 39, III
Postal Service, United States	5, LX; 39, I
Postsecondary Education, Office of	34, VI
President's Commission on White House Fellowships	1, IV
Presidential Documents	3
Presidio Trust	36, X
Prisons, Bureau of	28, V
Procurement and Property Management, Office of	7, XXXII
Productivity, Technology and Innovation, Assistant Secretary	37, IV
Public Contracts, Department of Labor	41, 50
Public and Indian Housing, Office of Assistant Secretary for	24, IX
Public Health Service	42, I
Railroad Retirement Board	20, II
Reclamation, Bureau of	43, I
Recovery Accountability and Transparency Board	4, II
Refugee Resettlement, Office of	45, IV
Relocation Allowances	41, 302
Research and Innovative Technology Administration	49, XI
Rural Business-Cooperative Service	7, XVIII, XLII, L
Rural Development Administration	7, XLII
Rural Housing Service	7, XVIII, XXXV, L
Rural Telephone Bank	7, XVI
Rural Utilities Service	7, XVII, XVIII, XLII, L
Saint Lawrence Seaway Development Corporation	33, IV
Science and Technology Policy, Office of	32, XXIV
Science and Technology Policy, Office of, and National Security Council	47, II

Agency	CFR Title, Subtitle or Chapter
Secret Service	31, IV
Securities and Exchange Commission	17, II
Selective Service System	32, XVI
Small Business Administration	2, XXVII; 13, I
Smithsonian Institution	36, V
Social Security Administration	2, XXIII; 20, III; 48, 23
Soldiers' and Airmen's Home, United States	5, XI
Special Counsel, Office of	5, VIII
Special Education and Rehabilitative Services, Office of	34, III
State Department	2, VI; 22, I; 28, XI
Federal Acquisition Regulation	48, 6
Surface Mining and Reclamation Appeals, Board of	30, III
Surface Mining Reclamation and Enforcement, Office of	30, VII
Surface Transportation Board	49, X
Susquehanna River Basin Commission	18, VIII
Technology Administration	15, XI
Technology Policy, Assistant Secretary for	37, IV
Technology, Under Secretary for	37, V
Tennessee Valley Authority	5, LXIX; 18, XIII
Thrift Supervision Office, Department of the Treasury	12, V
Trade Representative, United States, Office of	15, XX
Transportation, Department of	2, XII; 5, L
Commercial Space Transportation	14, III
Contract Appeals, Board of	48, 63
Emergency Management and Assistance	44, IV
Federal Acquisition Regulation	48, 12
Federal Aviation Administration	14, I
Federal Highway Administration	23, I, II
Federal Motor Carrier Safety Administration	49, III
Federal Railroad Administration	49, II
Federal Transit Administration	49, VI
Maritime Administration	46, II
National Highway Traffic Safety Administration	23, II, III; 47, IV; 49, V
Pipeline and Hazardous Materials Safety Administration	49, I
Saint Lawrence Seaway Development Corporation	33, IV
Secretary of Transportation, Office of	14, II; 49, Subtitle A
Surface Transportation Board	49, X
Transportation Statistics Bureau	49, XI
Transportation, Office of	7, XXXIII
Transportation Security Administration	49, XII
Transportation Statistics Bureau	49, XI
Travel Allowances, Temporary Duty (TDY)	41, 301
Treasury Department	5, XXI; 12, XV; 17, IV; 31, IX
Alcohol and Tobacco Tax and Trade Bureau	27, I
Community Development Financial Institutions Fund	12, XVIII
Comptroller of the Currency	12, I
Customs and Border Protection Bureau	19, I
Engraving and Printing, Bureau of	31, VI
Federal Acquisition Regulation	48, 10
Federal Claims Collection Standards	31, IX
Federal Law Enforcement Training Center	31, VII
Fiscal Service	31, II
Foreign Assets Control, Office of	31, V
Internal Revenue Service	26, I
Investment Security, Office of	31, VIII
Monetary Offices	31, I
Secret Service	31, IV
Secretary of the Treasury, Office of	31, Subtitle A
Thrift Supervision, Office of	12, V
Truman, Harry S. Scholarship Foundation	45, XVIII
United States and Canada, International Joint Commission	22, IV
United States and Mexico, International Boundary and Water Commission, United States Section	22, XI
Utah Reclamation Mitigation and Conservation Commission	43, III
Veterans Affairs Department	2, VIII; 38, I
Federal Acquisition Regulation	48, 8

Agency	CFR Title, Subtitle or Chapter
Veterans' Employment and Training Service, Office of the Assistant Secretary for	41, 61; 20, IX
Vice President of the United States, Office of	32, XXVIII
Vocational and Adult Education, Office of	34, IV
Wage and Hour Division	29, V
Water Resources Council	18, VI
Workers' Compensation Programs, Office of	20, I
World Agricultural Outlook Board	7, XXXVIII

List of CFR Sections Affected

All changes in this volume of the Code of Federal Regulations that were made by documents published in the FEDERAL REGISTER since January 1, 2001, are enumerated in the following list. Entries indicate the nature of the changes effected. Page numbers refer to FEDERAL REGISTER pages. The user should consult the entries for chapters and parts as well as sections for revisions.

Title 40 was established at 36 FR 12213, June 29, 1971. For the period before January 1, 2001, see the ''List of CFR Sections Affected, 1964–1972, 1973–1985, and 1986–2000'' published in ten separate volumes.

2001

40 CFR

66 FR Page

Chapter I

Chapter I Nomenclature change 34375, 34376

92.120 (c)(2)(v) corrected; CFR correction 58953, 59602

92.121 (b)(2)(vi), (ix), (xi)(A) and (4)(iv) correctly revised; CFR correction 58953, 59602

92.132 Correctly revised; CFR correction 58953, 59602

96 State implementation plan determinations 40609

Comment period extended 47887

97 State implementation plan determinations 40609

Comment period extended 47887

Appendix A amended 48575

Appendix B amended 48576

2002

40 CFR

67 FR Page

Chapter I

89.2 Amended 68339

89.106 (b) revised 68339

90 Heading revised 68339

90.1 Revised 68339

90.2 (c) added 68339

90.3 Amended 68339

90.103 (a)(2)(v) redesignated as (a)(2)(vi); new (a)(2)(v) added 68340

90.110 (b) revised 68340

91.3 Amended 68340

91.110 (b) revised 68340

40 CFR—Continued

67 FR Page

Chapter I—Continued

91.419 (b) amended 68340

91.601—91.608 (Subpart G) Appendix A amended 68340

91.803 (a) revised 68340

93.102 (d) added 50817

93.104 (e)(2) revised 50817

94 Heading revised 68341

94.1 Revised 68341

94.2 Amended; (b) introductory text revised 68341

94.7 (c), (d) and (e) revised 68341

94.8 (a), (e), (f) introductory text and (1) revised 68342

94.9 (a) introductory text and (1) revised 68343

94.12 Introductory text, (a), (b)(1) and (e) revised; (f) and (g) added 68343

94.104 (c) redesignated as (d); new (c) added 68343

94.105 (b) text and Footnotes 1 and 2 in (c)(1) table, (2) table and (d)(1) table amended; (e) added 68343

94.106 (b) introductory text, (1) introductory text, (2) introductory text, (3) introductory text and (4) revised; (b)(5) added 68344

94.108 (a)(1) amended 68345

94.203 (d)(14) and (16) revised 68346

94.204 (b)(9) and (10) amended; (b)(11) added; (e) revised 68346

94.209 Revised 68346

94.212 (b)(10) revised 68346

94.218 (d)(2)(iv) added 68346

94.304 (k) revised 68346

94.501 (a) revised 68346

40 CFR—Continued

67 FR Page

Chapter I—Continued
94.503 (d) added 68347
94.907 (d) and (g) revised 68347
94.1103 (a)(5) revised 68347
96 Notice 10844
Policy statement 21868
97 Policy statement 21868
97.4 (b)(4)(vi)(A) and (B) amended 21529
97.5 (c)(5)(i) and (ii) amended 21529
97.6 (c)(3) amended 21529
97.21 (b)(1)(i), (ii), (2)(i) and (ii) amended 21529
97.41 (a) and (d) revised 21529
97.42 (b) and (c) amended 21529
97.43 (a) introductory text, (4) introductory text, (ii), (b)(1), (2), (c)(2) through (8) amended 21529
97.53 (a) through (d) and (e) introductory text amended 21530
97.54 (f) amended 21530
97.70 (b)(1) through (3), (i), (4) introductory text, (5), (i) and (6) amended 21530
97.74 (d)(1)(ii), (iii), (2)(ii)(B), (C) and (D) amended 21530
Notice 10844
Appendices A, B and C amended 21530

2003

40 CFR

68 FR Page

Chapter I
89.2 (1)(iv) added 17748
Regulation at 68 FR 17748 withdrawn 25823
94.1 (b) revised 9780
94.2 (b) amended 9781
Amended 54960
94.5 Revised 9781
94.7 (d) revised 9782
94.8 (a) and (c) through (g) revised 9782
(a)(2)(i) Table A–1 and (e) revised 54960
94.9 (a)(1), (b)(1) and (2) revised 9783
(a)(1) revised 54960
94.10 (a) revised 9784
94.11 (g) added 9784
94.12 Introductory text revised; (f) added 9784
(f) redesignated as (h) 54960
94.106 Heading and introductory text revised 9784
94.107 (a) revised; (f) added 9784

40 CFR—Continued

68 FR Page

Chapter I—Continued
94.108 (a)(1), (b) and (d)(1) revised; (e) added 9784
94.109 Added 9785
94.203 (d)(14) revised 9785
94.204 (f) added 9785
94.205 (b) revised; (e) and (f) added 9785
94.209 Introductory text added 9786
94.211 (a)(3), (e)(2)(iii), (k) and (l) added; (h) introductory text and (j)(2) introductory text revised 9786
94.214 Revised 9786
94.217 (f) added 9786
94.218 (c) and (d)(1) revised 9786
94.219 (a) revised 9786
94.305 (a) revised 9786
94.403 (a) revised 9786
94.503 (a) and (b) revised 9787
94.505 (a) introductory text revised 9787
94.507 (a) revised 9787
94.508 (a) through (d) and (e) introductory text revised 9787
94.510 (b) revised 9787
94.801 (b) revised 9787
94.904 (b)(7) removed 9787
94.906 Heading revised; (d) removed 9787
94.907 (d) introductory text revised 9787
94.1001—94.1004 (Subpart K) Added 9787
94.1103 (a)(2)(v), (vi) and (7) added; (a)(3)(i) revised 9788
94.1106 Introductory text and (d) added; (a) and (c)(1) revised 9789

2004

40 CFR

69 FR Page

Chapter I
89.1 (b)(6) added; eff. 8-30-04 39212
89.2 Amended; eff. 8-30-04 39212
89.112 (f)(1) introductory text revised; (g) added; eff. 8-30-04 39212
89.114 (b)(3) added; eff. 8-30-04 39212
89.203 (c)(6) added; eff. 8-30-04 39213
89.330 (b)(3) revised; (e) added; eff. 8-30-04 39213
89.908 (c) added; eff. 8-30-04 39213
89.910 (c) added; eff. 8-30-04 39213
90.1 (g) added 2441
90.122 (e)(1) and (2) revised 1833
90.203 (e)(1), (5) and (g)(1) revised; (h) amended 1833

40 CFR—Continued

69 FR Page

Chapter I—Continued

90.204 (a) and (c) amended 1834
90.205 (a)(4) and (5) revised 1834
90.206 (a) revised 1834
90.207 (c) redesignated as (c)(1); (c)(2) and (g) added 1834
90.212 Removed 1835
90.213 Removed 1835
90.214 Removed 1835
90.215 Removed 1835
90.216 Removed 1835
90.217 Removed 1835
90.218 Removed 1835
90.219 Removed 1835
90.220 Removed 1835
93 Technical correction 43325
93.101 Amended; eff. 8–2–04 40072
93.102 (b)(1), (2) introductory text, (iii), (c) and (d) revised; (b)(3) redesignated as (b)(4); new (b)(3) added; eff. 8–2–04 40072
93.104 (b)(3) and (c)(3) amended; (c)(4), (e)(1) and (4) removed; (e)(2), (3) and (5) redesignated as (e)(1), (2) and (3); (d), new (e)(2) and (3) revised; eff. 8–2–04 40072
93.105 (c)(1)(vii) amended; eff. 8–2–04 40073
93.106 (b) revised; eff. 8–2–04 40073
93.109 (d) through (g) redesignated as (f), (g), (h) and (l); (b) introductory text, (c), new (f) introductory text, (2), (3), (4)(i), (ii), new (g) introductory text, (2), (3), new (h) and new (l)(2) introductory text revised; (b) Table 1 amended; new (d), (e), (i), (j) and (k) added; new (l)(2)(ii)(B) and (iii) amended; eff. 8–2–04 40073
93.110 (a) revised; eff. 8–2–04 40077
93.116 Revised; eff. 8–2–04 40077
93.117 Revised; eff. 8–2–04 40078
93.118 (a) and (b)(2)(ii) amended; (b) introductory text, (2)(iii), (e)(1), (2) and (3) revised; (b)(2)(iv) and (f) added; eff. 8–2–04 40078

40 CFR—Continued

69 FR Page

Chapter I—Continued

93.119 (c) through (h) redesignated as (d) and (f) through (j); heading, (a), (b), new (d) introductory text, (1), new (f)(5) and (g) revised; new (c), (e), (f)(7) and (8) added; new (f)(6), (h) introductory text, (i) introductory text and (j) amended; eff. 8–2–04 40079
93.120 (a)(2) revised; eff. 8–2–04 40080
93.121 (a)(2) redesignated as (a)(3); (a)(1), new (3) and (b)(1) revised; new (a)(2) and (c) added; (b) introductory text amended; eff. 8–2–04 40080
93.122 (c), (d) and (e) redesignated as (d), (e) and (g); new (c), (f) and (g)(3) added; new (g)(1) and (2) introductory text revised; eff. 8–2–04 40080
93.124 (b) removed; (c), (d) and (e) redesignated as (b), (c) and (d); eff. 8–2–04 40081
93.125 (a) and (d) amended; eff. 8–2–04 40081
93.126 Table 2 amended; eff. 8–2–04 40081
94.12 (f) added 9215
94.908 (c) added; eff. 8-30-04 39213
97.2 Amended 21645
97.4 (a) revised; (b)(1), (4)(i), (iv), (vi)(A) and (B) amended 21645
97.5 (c)(6)(i) and (ii) amended; (c)(6)(iii) added 21646
97.40 Amended 21646
97.42 (d)(4), (e)(1) and (2) amended 21646
97.43 (c)(8) removed 21646
97.51 (b)(1)(i)(D) amended 21646
97.54 (f) introductory text amended 21646
97.61 (b) amended 21647
97.70 (a)(1) amended; (b)(5) and (6) removed; (b)(7), (8) and (9) redesignated as new (b)(5), (6) and (7); (b)(3), (4), new (5), new (6) and (c) revised 21647
97.71 (a) introductory text revised; (b)(1), (2), (3)(ii), (iii), (iv)(C) and (c) amended; (c)(i), (ii) and (iii) removed 21647
97.72 (a) and (b) amended 21648
97.74 (a)(1), (d)(1) and (2)(ii) revised 21648
97.87 (b)(1)(iii)(A) amended 21648
97.90 (Subpart J) Added 21648

2005

40 CFR

70 FR Page

Chapter I

87 Technical correction 71191
87.7 (b)(1) and (2) removed..... 69686
87.8 Added 69686
87.21 (d)(1)(vi) and (vii) added 69686
87.64 Revised 69686
87.71 Revised 69686
87.82 Revised 69687
87.89 Revised 69687
89 Authority citation revised..... 40444
89.1 (b)(4)(ii) revised; (c) added 40444
89.2 Amended..... 40444
89.102 (d)(1)(i) revised..... 40444
89.110 (b)(2) revised 40444
89.112 (f)(3) revised 40444
89.114 (b)(3) revised; (b)(4) added..... 40445
89.130 Revised 40445
89.301 (d) revised 40445
89.319 (b)(2)(ii) and (c) introductory text revised 40445
89.320 (d) revised 40445
89.321 (d) revised 40445
89.322 (b) revised 40445
89.410 (e) added..... 40445
89.419 (a) introductory text, (3)(i), (b)(1) introductory text, (2)(i), (v)(B), (4)(ii) and (iii) revised..... 40445
89.421 (b) and (c) revised 40446
89.424 (d)(3) note revised..... 40446
89.501—89.516 (Subpart F) Appendix A amended 40446
89.603 (e) added..... 40446
89.611 (b)(1) revised 40446
89.612 (d) revised 40446
89.614 Added 40447
89.913 Added 40447
89.914 Added 40447
89.915 Added 40447
89.1003 (b)(5) and (6) removed; (b)(7)(iv) redesignated as (b)(7)(vii); (a)(3)(iii), (b)(7)(ii) and (iii) revised; new (b)(7)(iv) and (viii) added 40447
89.1006 (a)(1), (2), (5) and (c)(1) revised; (a)(6) added 40447
89.1009 Added 40448
90 Authority citation revised..... 40448
90.1 (b) and (d)(5) revised; (c) added..... 40448
90.3 Amended..... 40448
90.119 (a)(1)(i) revised..... 40448
90.120 (b)(4) added 40448
90.301 (c) and (d) revised 40448

40 CFR—Continued

70 FR Page

Chapter I—Continued

90.308 (b)(1) revised 40448
90.316 (b)(2)(ii) and (c) introductory text revised 40448
90.318 (d) revised 40449
90.320 (b) revised 40449
90.324 (a)(3) and (b) revised 40449
90.326 Introductory text, (a) and (e)(4) revised 40449
90.401 (d) revised 40449
90.405 (d)(10) removed..... 40449
90.408 (b)(2) revised 40449
90.409 (c)(6) revised 40449
90.417 Revised 40449
90.418 Revised 40449
90.419 (e) removed; (b) and (c) amended..... 40449
90.421 (b) introductory text and (4)(ii) introductory text revised..... 40450
90.426 (e) revised; (f) and (g) removed 40450
90.612 (b)(1) revised 40450
90.613 (d) revised 40450
90.615 Added 40450
90.706 (b)(1) amended..... 40450
90.913 Added 40450
90.1006 (a)(1). (2), (5) and (c)(1) revised; (a)(6) added 40450
91 Authority citation revised..... 40451
91.3 Amended..... 40451
91.119 (b)(4) added 40451
91.207 (a) amended 40451
91.301 (c) revised 40451
91.316 (b)(2)(ii) and (c) introductory text revised; (d)(6) amended 40451
91.318 (b)(11) amended; (d) revised..... 40451
91.320 (b) revised 40451
91.325 (c)(1)(iv) and (2)(iii) amended; (c)(2)(iv) added..... 40451
91.419 (b) amended 40452
91.421 (b)(4)(ii) and (iii) revised..... 40452
91.705 (d) revised 40452
91.707 Added 40452
91.1106 (a)(1), (2), (5) and (c)(1) revised; (a)(6) added 40452
92 Authority citation revised..... 40452
92.1 (a) introductory text, (b)(3) and (4) revised; (d) added..... 40452
92.2 (b) amended..... 40453
92.8 (b) revised 40453
92.12 (g) and (h) added..... 40453
92.104 (b)(1)(i) revised..... 40453
92.105 (d) revised 40453
92.106 (b)(1)(ii) revised..... 40453

40 CFR—Continued

70 FR Page

Chapter I—Continued

92.109 (c)(3) revised 40454
92.114 (a)(2)(ii), (d)(2) introductory text and (e)(1) revised 40454
92.123 (a)(2) revised 40454
92.124 (f) revised 40454
92.126 (b)(3) revised 40454
92.131 (b)(3) revised 40455
92.132 (b)(3)(iii)(D)(*2*) and (d) revised 40455
92.203 (d)(1)(i) revised 40455
92.204 (a) revised 40455
92.205 (a) introductory text revised 40455
92.208 (a) and (b) revised 40455
92.210 (b)(1), (2), (d)(2) and (3) revised 40455
92.212 (b)(2)(ii), (v)(A), (G), (c)(2)(v)(A) and (D)(*2*) revised 40456
92.215 (a)(2)(i)(A) and (b) revised 40456
92.216 (a)(2) removed 40456
92.403 (b) revised 40456
92.508 (e) introductory text revised 40456
92.511 (g) introductory text revised 40456
92.512 (e) revised 40457
92.806 Added 40457
92.906 (a) introductory text revised 40457
92.907 (a)(3) and (b)(3) revised 40457
92.912 Added 40457
92.1106 (a)(1), (2), (5) and (c)(1) revised; (a)(6) added 40457
92 Appendix IV amended 40457
93 Technical correction 31354
93.102 (b)(2)(ii) and (iii) amended; (b)(2)(iv) and (v) added 24291
93.105 (e) amended 24291
93.119 (f)(7) and (8) amended; (f)(9) and (10) added 24291
94 Authority citation revised 40457
94.2 (b) amended 40457
94.9 (a)(3) revised 40458
94.12 (h) revised 40458
94.105 (b) revised 40458
94.106 (b)(3)(i) revised 40458
94.107 (b) revised 40458
94.109 (b) revised 40458
94.211 (k) revised 40458
94.212 (b)(6) and (7) revised 40459
94.806 Added 40459
94.904 (a) revised; (c) added 40459
94.907 Revised 40459
94.912 Added 40460

40 CFR—Continued

70 FR Page

Chapter I—Continued

94.913 Added 40461
94.1004 (b) and (c) introductory text revised 40461
94.1103 (a)(8) and (b)(4) added; (b)(3) revised 40461
94.1106 Introductory text, (a)(1), (2), (c) and (d) revised 40462
96 Authority citation revised 25339
96.101—96.108 (Subpart AA) Added; eff. 7–11–05 25339
96.110—96.114 (Subpart BB) Added; eff. 7–11–05 25339
96.120—96.124 (Subpart CC) Added; eff. 7–11–05 25339
96.140—96.143 (Subpart EE) Added; eff. 7–11–05 25339
96.150—96.157 (Subpart FF) Added; eff. 7–11–05 25339
96.160—96.162 (Subpart GG) Added; eff. 7–11–05 25339
96.170—96.176 (Subpart HH) Added; eff. 7–11–05 25339
96.180—96.188 (Subpart II) Added; eff. 7–11–05 25339
96.201—96.208 (Subpart AAA) Added; eff. 7–11–05 25362
96.210—96.214 (Subpart BBB) Added; eff. 7–11–05 25362
96.220—96.224 (Subpart CCC) Added; eff. 7–11–05 25362
96.250—96.257 (Subpart FFF) Added; eff. 7–11–05 25362
96.260—96.262 (Subpart GGG) Added; eff. 7–11–05 25362
96.270—96.276 (Subpart HHH) Added; eff. 7–11–05 25362
96.280—96.288 (Subpart III) Added; eff. 7–11–05 25362
96.301—96.308 (Subpart AAAA) Added; eff. 7–11–05 25382
96.310—96.314 (Subpart BBBB) Added; eff. 7–11–05 25382
96.320—96.324 (Subpart CCCC) Added; eff. 7–11–05 25382
96.340—96.342 (Subpart EEEE) Added; eff. 7–11–05 25382
96.350—96.357 (Subpart FFFF) Added; eff. 7–11–05 25382
96.360—96.362 (Subpart GGGG) Added; eff. 7–11–05 25382
96.370—96.376 (Subpart HHHH) Added; eff. 7–11–05 25382
96.380—96.388 (Subpart IIII) Added; eff. 7–11–05 25382

2006

40 CFR

71 FR Page

Chapter I

89.1 (d) added 39184
89.115 (d)(11) added 39184
89.201 Revised 39184
93.101 Amended 12510
93.105 (c)(1)(v) removed; (c)(1)(vi) and (vii) redesignated as (c)(1)(v) and (vi) 12510
93.109 (b) Table 1, (j), (k) and (l)(1) amended; (i)(1) and (2) redesignated as (i)(2) and (3); new (i)(1) added 12510
93.116 Heading and (a) revised 12510
93.123 Heading, (b) heading, (1)(i), (ii), (iii), (2) and (3) revised; (a)(1) introductory text, (c)(4) and (5) amended; (b)(1)(iv) and (v) added 12510
93.125 (a) amended 12510
93.126 Footnote 1 amended 12510
93.127 Amended 12511
93.152 Amended 17008, 40427
Regulation at 71 FR 17008 withdrawn 31093
93.153 (b) revised 17009, 40427
Regulation at 71 FR 17009 withdrawn 31093
94.1 (d) added 39184
94.301 Revised 39184
96 Actions on petitions 25304
Heading revised 25380
96.102 Amended 25380, 74794
96.103 Revised 25381
96.104 Revised 25382
96.105 (a)(1), (b)(3) and (7) amended 25382
(a)(1) amended 74794
96.106 (a)(1)(i), (c)(2), (4), (7) and (d)(1) amended; (d)(2) removed; (d)(ii) redesignated as new (d)(2) 25382
96.111 (c) amended 25382
96.112 (c)(1) amended 25382
96.113 (a)(1) and (4)(iv) amended 25382
96.115 Added 25382
(c) introductory text amended 74794
96.120 (a) amended 25383
Heading revised 74794
96.121 (a) and (b) amended 25383
96.123 (b) amended 25383
96.140 Table amended 25302
96.141 (b)(1) and (c)(1) amended; (b)(2) and (c)(2) removed 25383

40 CFR—Continued

71 FR Page

Chapter I—Continued

96.142 (a)(2)(ii)(C), (c)(1), (2) and (4)(ii) amended; (c) introductory text revised 25383
96.143 (a) table amended 25302
(b)(2), (c)(1), (d), (3), (4) and (5) amended 25383
(c) introductory text and (2) introductory text amended 74794
96.151 (b)(2) introductory text, (3)(iii)(A), (B), (4) introductory text, (ii) and (iii) amended; (b)(5) added 25383
(b)(2) introductory text and (4) introductory text amended 74794
96.153 (a), (b) and (d) amended; (c) revised 25384
96.154 (a)(1), (2), (c)(2)(ii), (e) and (f)(2) amended; (a)(3) removed 25384
96.155 (b) amended 25384
96.157 (a) and (b) amended 25384
96.170 (b) introductory text, (5), (c)(1) and (d)(3) amended; (c)(2) removed 25384
96.171 (c) amended 25385
96.173 Amended 25385
96.174 (d)(1)(i), (ii) and (3) amended; (d)(1)(iii) and (iv) added 25385
96.176 Removed 25385
96.183 (a)(5) revised; (b)(2) amended 25385
96.184 (c)(2), (d)(2), (3), (f) and (h)(2) amended 25385
(c) introductory text amended 74794
96.185 (a)(5) amended; (c) added 25385
96.186 (a) and (b)(2) amended 25385
96.187 (b)(1), (2)(i), (3)(ii) and (A) amended; (b)(3)(i) revised 25385
(b)(2)(ii) amended 74794
96.188 Heading revised; (a)(2), (c) and (d)(2) amended 25385
96.202 Amended 25385, 74794
96.203 Revised 25387
96.204 Revised 25387
96.205 (a)(1), (b)(2) and (6) amended 25388
96.206 (a)(1)(i), (c)(2) and (7) amended; (d)(1) designation and (2) removed; old (d)(1)(i) and (ii) redesignated as new (d)(1) and (2) 25388
(c)(4) amended 74794
96.211 (c) amended 25388
96.212 (c)(1) amended 25388
96.213 (a)(1) and (4)(iv) amended 25388

40 CFR—Continued

71 FR Page

Chapter I—Continued

96.215 Added 25388
(c) introductory text amended..... 74794
96.220 (a) and (b) amended..... 25388
96.221 (a) and (b) amended..... 25388
96.251 (b)(2) introductory text, (3)(iii)(A), (B), (4) introductory text, (ii) and (iii) amended; (b)(5) added 25388
(b)(2) introductory text and (4) introductory text amended 74794
96.254 (a)(1), (2), (b)(1)(ii), (c)(2)(ii), (iv), (vi), (d)(1), (e) and (f)(2) amended; (a)(3) removed 25389
(e) amended..... 74794
96.255 (b) amended..... 25389
96.257 (a) and (b) amended..... 25389
96.261 (a)(1) and (2) amended; (a)(3) added 25389
96.270 (b) introductory text, (5), (c)(1) and (d)(3) amended; (c)(2) removed; (e) added 25389
96.271 (c) removed 25390
(d)(2) amended 74794
96.273 Amended..... 25390
96.274 (d)(1)(i), (ii) and (3) amended; (d)(1)(iii) added 25390
96.276 Removed..... 25390
96.283 (a)(2)(iii), (b)(1) and (2) amended; (a)(5) revised 25390
96.284 (a), (c)(2), (d)(2), (3), (f) and (h)(2) amended 25390
(c) introductory text amended..... 74794
96.285 (a)(5) amended; (c) added 25390
96.286 (a) and (b)(2) amended..... 25390
96.287 (b)(1) and (2)(i) amended; (b)(3) removed..... 25390
(b)(2)(ii) amended..... 74794
96.288 Heading revised; (a)(2), (c) and (d)(2) amended 25390
96.302 Amended..... 25390, 74794
96.303 Revised 25392
96.304 Revised 25392
(a)(1) amended 74794
96.305 (a)(1), (b)(3) and (7) amended 25293
96.306 (a)(1)(i), (c)(2) and (4) amended; (d)(1) designation and (2) removed; old (d)(1)(ii) redesignated as new (d)(2) 25293
96.311 (c) amended..... 25293
96.312 (c)(1) amended..... 25293
96.313 (a)(1) and (4)(iv) amended 25293
96.315 Added 25293
96.320 (a) amended..... 25394

40 CFR—Continued

71 FR Page

Chapter I—Continued

96.321 (a) and (b) amended..... 25394
96.341 (b)(1) designation, (2), (c)(1) designation and (2) removed..... 25394
96.342 (a)(2)(i), (ii)(C), (c)(1), (2) and (4)(ii) amended; (c) introductory text revised 25394
(c)(2) amended..... 74794
96.351 (b)(2) introductory text, (3)(iii)(A), (B), (4) introductory text, (ii) and (iii) amended; (b)(5) added 25394
(b)(2) introductory text and (4) introductory text amended 74794
96.353 (a), (b) and (d) amended; (c) revised 25395
96.354 (a)(1), (2), (c)(2)(ii), (e) and (f)(2) amended; (a)(3) removed 25395
96.355 (b) amended..... 25395
96.357 (a) and (b) amended..... 25395
96.370 (b) introductory text, (2)(ii), (3) introductory text, (7), (c)(1) and (d)(3) amended; (c)(2) removed; (e) added..... 25395
96.371 (c) amended..... 25395
(d)(2) amended 74794
96.373 Amended..... 25395
96.374 (d)(1)(i), (ii) and (2)(ii)(B) amended; (d)(1)(iii), (iv), (2)(ii)(C) and (D) added; second (d)(2) and (3) redesignated as (d)(3) and (4) 25395
96.376 Removed..... 25396
96.383 (a)(5) revised; (b)(2) amended 25396
96.384 (b), (c)(2), (d)(2) and (3) amended..... 25396
(c) introductory text amended..... 74794
96.385 (a)(5) amended (c) added 25396
96.386 (a), (b)(2), (c)(2) and (g) amended..... 25396
96.387 (b)(1), (2)(i), (3)(ii) and (A) amended; (b)(3)(i) revised..... 25396
(b)(2)(ii) amended..... 74794
96.388 Heading revised; (a)(2), (c) and (d)(2) amended 25396
97 Heading and authority citation revised 25396
97.101—97.108 (Subpart AA) Added 25396
97.102 Amended..... 74795
97.110—97.115 (Subpart BB) Added 25396
97.113 (a)(4)(iv) amended 74795
97.120—97.124 (Subpart CC) Added 25396

40 CFR—Continued

71 FR Page

Chapter I—Continued

97.140—97.144 (Subpart EE) Added 25396
97.143 (c) introductory text and (2) introductory text amended 74795
97.144 (c)(2) amended 74795
97.150—97.157 (Subpart FF) Added 25396
97.160—97.162 (Subpart GG) Added 25396
97.170—97.175 (Subpart HH) Added 25396
97.180—97.188 (Subpart II) Added 25396
97.184 (c) introductory text amended 74795
97.187 (b)(2)(ii) amended 74795
97.201—97.208 (Subpart AAA) Added 25422
97.202 Amended 74795
97.210—97.215 (Subpart BBB) Added 25422
97.220—97.224 (Subpart CCC) Added 25422
97.250—97.257 (Subpart FFF) Added 25422
97.260—97.262 (Subpart GGG) Added 25422
97.270—97.275 (Subpart HHH) Added 25422
97.280—97.288 (Subpart III) Added 25422
97.283 (a)(2)(iii) and (iv) amended 74795
97.284 (c) introductory text, (2) and (d)(2) amended 74795
97.287 (b)(2)(ii) amended 74795
97.301—97.308 (Subpart AAAA) Added 25443
97.302 Amended 74795
97.310—97.315 (Subpart BBBB) Added 25443
97.320—97.324 (Subpart CCCC) Added 25443
97.340—97.343 (Subpart EEEE) Added 25443
97.350—97.357 (Subpart FFFF) Added 25443
97.360—97.362 (Subpart GGGG) Added 25443
97.370—97.375 (Subpart HHHH) Added 25443
97.371 (d)(2) amended 74795
97.380—97.388 (Subpart IIII) Added 25443

40 CFR—Continued

71 FR Page

Chapter I—Continued

97.384 (c) introductory text amended 74795
97.387 (b)(2)(ii) amended 74795

2007

40 CFR

72 FR Page

Chapter I

89 Authority citation revised 53126
89.1 (b)(2) revised 53126
89.2 Amended 53126
89.101 Revised 53127
89.102 (d) introductory text, (2)(iii) and (g) revised; (i) through (m) added 53127
(i) revised; (j) through (m) removed 72956
89.108 (d) added 53129
89.115 (g) added 53129
89.205 (a) revised 53129
89.601 (d) added 53129
89.611 (f)(1)(v) and (vi) added 53129
94.8 (a)(2)(ii) revised 20952, 68525
Regulation at 72 FR 20952 withdrawn 33694
96 Actions on petitions 35354
96.102 Amended 59205
96.202 Amended 59206
96.302 Amended 59206
97 Actions on petitions 35354
97.102 Amended 59206
97.140—97.144 (Subpart EE) Appendix A amended 41459, 46394, 52293, 55068, 55672, 56920, 57215, 58546, 58552, 59487, 71579, 72262
Regulation at 72 FR 58552 withdrawn 68515
97.180—97.188 (Subpart II) Appendix A amended 46394, 56920, 57215, 58552, 59487, 72262
Regulation at 72 FR 58552 withdrawn 68515
97.202 Amended 59207
97.280—97.288 (Subpart III) Appendix A amended 46394, 56920, 57215, 58552, 59487
Regulation at 72 FR 58552 withdrawn 68515
97.302 Amended 59207
97.301—97.308 (Subpart AAAA) Appendix A amended 72262
97.340—97.343 (Subpart EEEE) Appendix A amended 46394, 52293, 55068, 55672, 56920, 57215, 58546, 58553, 59487, 71579, 72263

40 CFR—Continued

72 FR Page

Chapter I—Continued
Appendix A correctly amended 55659
Regulation at 72 FR 58553 withdrawn 68515
97.380—97.388 (Subpart IIII) Appendix A amended 46394, 56920, 57215, 58553, 59487, 72263
Regulation at 72 FR 58553 withdrawn 68515

2008

40 CFR

73 FR Page

Chapter I
89.6 (b)(2) and (3) correctly reinstated; CFR correction 35591
89.614 Removed 59179
89.916 Added; eff. 7–7–08 ..... 25196, 37194
89.1003 (b)(7)(iii), (iv) and (v) revised 59179
90.1 (h) added 3612
90.1 (d)(1) and (5) revised; (d)(8) added 59179
90.2 (d) and (e) added 59179
90.3 Amended 59179
90.101 Revised 59179
90.107 (d)(12) added 3612
90.107 (d)(11)(ii) and (12) revised; (d)(13) and (14) added 59180
90.114 (c)(7) revised; (g) added 3613
90.114 (g) revised 59180
90.116 (d)(5) revised; (e)(1) removed 59180
90.120 (b)(3) added 59180
90.127 Added 59180
90.128 Added 59181
90.129 Added 59181
90.201 Revised 3613, 59181
90.210 (i) added 59181
90.426 (b), (c)(1), (d) and (i) revised; (j) added 59182
90.601 (c) added 59182
90.615 Revised 59182
90.1003 (b)(3) revised 59182
90.1007 Added 59182
90.1103 (e) added 59182
91.1 (d) added 59183
91.101 Revised 59183
91.107 (d)(12) added 59183
91.119 (b)(3) added 59183
91.707 Removed 59183
91.1013 Added 59183
91.1103 (b)(3) revised 59183
92.1 (a) introductory text revised; (e) added; eff. 7–7–08 ..... 25196, 37194
92.2 Amended; eff. 7–7–08 ..... 25196, 37194

40 CFR—Continued

73 FR Page

Chapter I—Continued
92.9 (b)(1)(ii) revised 59183
92.12 (b) revised; (i) and (j) added; eff. 7–7–08 ..... 25196, 37194
92.204 (f) added; eff. 7–7–08 ..... 25196, 37195
92.206 (c) revised; eff. 7–7–08 ..... 25197, 37195
92.208 (a) revised; eff. 7–7–08 ..... 25197, 37195
92.212 (b)(2)(iv) revised; eff. 7–7–08 ..... 25197, 37195
92.304 (n)(1) revised 59183
92.501 (c) added; eff. 7–7–08 ..... 25197, 37195
92.806 Removed 59183
92.1007 Added; eff. 7–7–08 ..... 25197, 37195
93.101 Amended 4439
93.102 (b)(2)(v) and (4) amended 4439
93.104 (b)(2), (3), (c)(3) and (e) introductory text revised; (f) added 4439
93.105 (c)(1)(v) and (e) amended 4439
93.106 Heading, (a)(1)(iii) and (iv) revised; (d) redesignated as (e); (a)(1)(v) and new (d) added 4440
93.109 (e)(2) introductory text and (l)(2)(i) revised; (e)(2)(v) removed 4440
93.114 Introductory text revised 4440
93.115 Heading revised; (e) added 4440
93.116 (a) amended 4440
93.118 (b) introductory text revised; (d)(2) amended; (d)(3) added 4440
93.119 (f)(10) and (g)(1) amended; (g)(3) added 4441
93.120 (a)(2) revised 4441
93.121 (a)(1) and (2) revised 4441
93.123 (a)(3) added; (b)(1)(i) revised 4441
93.126 Table 2 amended 4441
94.1 (b) revised; eff. 7–7–08 ..... 25197, 37196
94.2 Amended; eff. 7–7–08 ..... 25198, 37196
94.12 (i) added; eff. 7–7–08 ..... 25198, 37196
94.108 (a)(4) added; (d) revised; eff. 7–7–08 ..... 25198, 37196
94.201 Revised 59184
94.208 (a) revised; eff. 7–7–08 ..... 25198, 37196
94.209 (a) introductory text revised; eff. 7–7–08 ..... 25198, 37196
94.501 (c) added; eff. 7–7–08 ..... 25198, 37197
94.806 Removed 59184
94.914 Added; eff. 7–7–08 ..... 25198, 37197
97.140—97.144 (Subpart EE) Appendix A amended 6040

40 CFR—Continued

73 FR Page

Chapter I—Continued

97.180—97.188 (Subpart II) Appendix A amended 6040
97.280—97.288 (Subpart III) Appendix A amended 6041
97.340—97.343 (Subpart EEEE) Appendix A amended 6041
97.380—97.388 (Subpart IIII) Appendix A amended 6041
Technical correction 8408

2009

40 CFR

74 FR Page

Chapter I

87 Authority citation revised 56373
87.2 Heading revised; amended 56374
87.64 Revised 56374
89.1 (b)(5) revised 8423
89.115 (d)(9) revised 56374
89.407 (d)(1) revised 56374
90.107 (d)(8) revised 56374
90.409 (c)(1) revised 56374
90.611 Revised 8423
94.3 Amended 56374
94.103 (c) added 56374
94.104 (e) added 56374
94.203 (d)(10) revised 56374
97.301—97.308 (Subpart AAAA) Appendix A amended 61537
98 Added 56374

2010

(Regulations published from January 1, 2010 through July 1, 2010)

40 CFR

75 FR Page

Chapter I

93.101 Amended 14283
93.105 (c)(1)(vi) amended 14284
93.109 (g)(2) introductory text and (i) heading revised; (g)(3), (j), (k) and (l) redesignated as (g)(4), (l), (m) and (n); new (g)(3), (j) and (k) added; (b), (i) introductory text, (1), (2) introductory text, (3), new (n)(2) introductory text and (iii) amended 14284
93.116 (a) revised 14285
93.118 (a) amended 14285
93.119 (a) amended; (e)(2) revised 14285

40 CFR—Continued

75 FR Page

Chapter I—Continued

93.121 (b) introductory text and (c) introductory text amended 14285
93.150 (c) removed; (e) added; eff. 7–6–10 17272
93.151 Revised; eff. 7–6–10 17272
93.152 Amended; eff. 7–6–10 17272
93.153 (b)(1) table, (d)(1), (2), (e)(2), (f), (g) introductory text, (h) introductory text, (1), (2), (4), (i), (j) and (k) revised; (c)(2)(xxii), (e)(3) and (g)(3) added; eff. 7–6–10 17274
93.154 Revised; eff. 7–6–10 17275
93.155 Revised; eff. 7–6–10 17275
93.156 Revised; eff. 7–6–10 17275
93.157 Revised; eff. 7–6–10 17276
93.158 (a)(1), (2), (3) introductory text, (4) introductory text, (5) introductory text, (i) introductory text, (C), (iii), (iv) introductory text, (A)(*1*), (*2*) and (B) revised; (a)(5)(i)(D) added; eff. 7–6–10 17276
93.159 (b) introductory text, (1)(ii), (2), (c) introductory text and (d) revised; eff. 7–6–10 17277
93.160 (e), (f) and (g) revised; eff. 7–6–10 17277
93.161 Added; eff. 7–6–10 17277
93.162 Added; eff. 7–6–10 17278
93.163 Added; eff. 7–6–10 17278
93.164 Added; eff. 7–6–10 17278
93.165 Added; eff. 7–6–10 17278
94.1 (b)(3) revised 22981
94.12 (j) added 22981
94.904 (a) revised 22981
98.1 (b) revised 12456
Regulation at 75 FR 12456 withdrawn 22699
98.2 (a)(1), (2) and (4) revised 12456
Regulation at 75 FR 12456 withdrawn 22699
98.3 (b) introductory text, (2), (c)(4)(i), (ii), (iii) introductory text and (i)(1) revised; (b)(1) removed 12456
Regulation at 75 FR 12456 withdrawn 22699

40 CFR—Continued

75 FR Page

Chapter I—Continued
98.1—98.9 (Subpart A) Tables A–3, A–4 and A–5 added 12456
Tables A–3, A–4 and A–5 corrected 14081

40 CFR—Continued

75 FR Page

Chapter I—Continued
Regulation at 75 FR 12456 withdrawn 22699