AUTHENTICATED
U.S. GOVERNMENT
INFORMATION
GPO

APPENDIX A–2 TO PART 60—TEST METHODS 2G THROUGH 3C

Method 2G—Determination of Stack Gas Velocity and Volumetric Flow Rate With Two-Dimensional Probes
Method 2H—Determination of Stack Gas Velocity Taking Into Account Velocity Decay Near the Stack Wall
Method 3—Gas analysis for the determination of dry molecular weight
Method 3A—Determination of Oxygen and Carbon Dioxide Concentrations in Emissions From Stationary Sources (Instrumental Analyzer Procedure)
Method 3B—Gas analysis for the determination of emission rate correction factor or excess air
Method 3C—Determination of carbon dioxide, methane, nitrogen, and oxygen from stationary sources

The test methods in this appendix are referred to in §60.8 (Performance Tests) and §60.11 (Compliance With Standards and Maintenance Requirements) of 40 CFR part 60, subpart A (General Provisions). Specific uses of these test methods are described in the standards of performance contained in the subparts, beginning with Subpart D.

Within each standard of performance, a section title ''Test Methods and Procedures'' is provided to: (1) Identify the test methods to be used as reference methods to the facility subject to the respective standard and (2) identify any special instructions or conditions to be followed when applying a method to the respective facility. Such instructions (for example, establish sampling rates, volumes, or temperatures) are to be used either in addition to, or as a substitute for procedures in a test method. Similarly, for sources subject to emission monitoring requirements, specific instructions pertaining to any use of a test method as a reference method are provided in the subpart or in Appendix B.

Inclusion of methods in this appendix is not intended as an endorsement or denial of their applicability to sources that are not subject to standards of performance. The methods are potentially applicable to other sources; however, applicability should be confirmed by careful and appropriate evaluation of the conditions prevalent at such sources.

The approach followed in the formulation of the test methods involves specifications for equipment, procedures, and performance. In concept, a performance specification approach would be preferable in all methods because this allows the greatest flexibility to the user. In practice, however, this approach is impractical in most cases because performance specifications cannot be established. Most of the methods described herein, therefore, involve specific equipment specifications and procedures, and only a few methods in this appendix rely on performance criteria.

Minor changes in the test methods should not necessarily affect the validity of the results and it is recognized that alternative and equivalent methods exist. Section 60.8 provides authority for the Administrator to specify or approve (1) equivalent methods, (2) alternative methods, and (3) minor changes in the methodology of the test methods. It should be clearly understood that unless otherwise identified all such methods and changes must have prior approval of the Administrator. An owner employing such methods or deviations from the test methods without obtaining prior approval does so at the risk of subsequent disapproval and retesting with approved methods.

Within the test methods, certain specific equipment or procedures are recognized as being acceptable or potentially acceptable and are specifically identified in the methods. The items identified as acceptable options may be used without approval but must be identified in the test report. The potentially approvable options are cited as ''subject to the approval of the Administrator'' or as ''or equivalent.'' Such potentially approvable techniques or alternatives may be used at the discretion of the owner without prior approval. However, detailed descriptions for applying these potentially approvable techniques or alternatives are not provided in the test methods. Also, the potentially approvable options are not necessarily acceptable in all applications. Therefore, an owner electing to use such potentially approvable techniques or alternatives is responsible for: (1) assuring that the techniques or alternatives are in fact applicable and are properly executed; (2) including a written description of the alternative method in the test report (the written method must be clear and must be capable of being performed without additional instruction, and the degree of detail should be similar to the detail contained in the test methods); and (3) providing any rationale or supporting data necessary to show the validity of the alternative in the particular application. Failure to meet these requirements can result in the Administrator's disapproval of the alternative.

METHOD 2G—DETERMINATION OF STACK GAS VELOCITY AND VOLUMETRIC FLOW RATE WITH TWO-DIMENSIONAL PROBES

NOTE: This method does not include all of the specifications (e.g., equipment and supplies) and procedures (e.g., sampling) essential to its performance. Some material has been incorporated from other methods in this part. Therefore, to obtain reliable results, those using this method should have a thorough knowledge of at least the following

additional test methods: Methods 1, 2, 3 or 3A, and 4.

1.0 Scope and Application

1.1 This method is applicable for the determination of yaw angle, near-axial velocity, and the volumetric flow rate of a gas stream in a stack or duct using a two-dimensional (2–D) probe.

2.0 Summary of Method

2.1 A 2–D probe is used to measure the velocity pressure and the yaw angle of the flow velocity vector in a stack or duct. Alternatively, these measurements may be made by operating one of the three-dimensional (3–D) probes described in Method 2F, in yaw determination mode only. From these measurements and a determination of the stack gas density, the average near-axial velocity of the stack gas is calculated. The near-axial velocity accounts for the yaw, but not the pitch, component of flow. The average gas volumetric flow rate in the stack or duct is then determined from the average near-axial velocity.

3.0 Definitions

3.1. *Angle-measuring Device Rotational Offset (R_{ADO}).* The rotational position of an angle-measuring device relative to the reference scribe line, as determined during the pre-test rotational position check described in section 8.3.

3.2 *Calibration Pitot Tube.* The standard (Prandtl type) pitot tube used as a reference when calibrating a probe under this method.

3.3 *Field Test.* A set of measurements conducted at a specific unit or exhaust stack/duct to satisfy the applicable regulation (e.g., a three-run boiler performance test, a single-or multiple-load nine-run relative accuracy test).

3.4 *Full Scale of Pressure-measuring Device.* Full scale refers to the upper limit of the measurement range displayed by the device. For bi-directional pressure gauges, full scale includes the entire pressure range from the lowest negative value to the highest positive value on the pressure scale.

3.5 *Main probe.* Refers to the probe head and that section of probe sheath directly attached to the probe head. The main probe sheath is distinguished from probe extensions, which are sections of sheath added onto the main probe to extend its reach.

3.6 *''May,'' ''Must,'' ''Shall,'' ''Should,''* and the imperative form of verbs.

3.6.1 *''May''* is used to indicate that a provision of this method is optional.

3.6.2 *''Must,'' ''Shall,''* and the imperative form of verbs (such as ''record'' or ''enter'') are used to indicate that a provision of this method is mandatory.

3.6.3 *''Should''* is used to indicate that a provision of this method is not mandatory, but is highly recommended as good practice.

3.7 *Method 1.* Refers to 40 CFR part 60, appendix A, ''Method 1—Sample and velocity traverses for stationary sources.''

3.8 *Method 2.* Refers to 40 CFR part 60, appendix A, ''Method 2—Determination of stack gas velocity and volumetric flow rate (Type S pitot tube).''

3.9 *Method 2F.* Refers to 40 CFR part 60, appendix A, ''Method 2F—Determination of stack gas velocity and volumetric flow rate with three-dimensional probes.''

3.10 *Near-axial Velocity.* The velocity vector parallel to the axis of the stack or duct that accounts for the yaw angle component of gas flow. The term ''near-axial'' is used herein to indicate that the velocity and volumetric flow rate results account for the measured yaw angle component of flow at each measurement point.

3.11 *Nominal Velocity.* Refers to a wind tunnel velocity setting that approximates the actual wind tunnel velocity to within ±1.5 m/sec (±5 ft/sec).

3.12 *Pitch Angle.* The angle between the axis of the stack or duct and the pitch component of flow, i.e., the component of the total velocity vector in a plane defined by the traverse line and the axis of the stack or duct. (Figure 2G–1 illustrates the ''pitch plane.'') From the standpoint of a tester facing a test port in a vertical stack, the pitch component of flow is the vector of flow moving from the center of the stack toward or away from that test port. The pitch angle is the angle described by this pitch component of flow and the vertical axis of the stack.

3.13 *Readability.* For the purposes of this method, readability for an analog measurement device is one half of the smallest scale division. For a digital measurement device, it is the number of decimals displayed by the device.

3.14 *Reference Scribe Line.* A line permanently inscribed on the main probe sheath (in accordance with section 6.1.5.1) to serve as a reference mark for determining yaw angles.

3.15 *Reference Scribe Line Rotational Offset (R_{SLO}).* The rotational position of a probe's reference scribe line relative to the probe's yaw-null position, as determined during the yaw angle calibration described in section 10.5.

3.16 *Response Time.* The time required for the measurement system to fully respond to a change from zero differential pressure and ambient temperature to the stable stack or duct pressure and temperature readings at a traverse point.

3.17 *Tested Probe.* A probe that is being calibrated.

3.18 *Three-dimensional (3–D) Probe.* A directional probe used to determine the velocity

pressure and the yaw and pitch angles in a flowing gas stream.

3.19 *Two-dimensional (2–D) Probe.* A directional probe used to measure velocity pressure and yaw angle in a flowing gas stream.

3.20 *Traverse Line.* A diameter or axis extending across a stack or duct on which measurements of velocity pressure and flow angles are made.

3.21 *Wind Tunnel Calibration Location.* A point, line, area, or volume within the wind tunnel test section at, along, or within which probes are calibrated. At a particular wind tunnel velocity setting, the average velocity pressures at specified points at, along, or within the calibration location shall vary by no more than 2 percent or 0.3 mm H_20 (0.01 in. H_2O), whichever is less restrictive, from the average velocity pressure at the calibration pitot tube location. Air flow at this location shall be axial, i.e., yaw and pitch angles within ±3° of 0°. Compliance with these flow criteria shall be demonstrated by performing the procedures prescribed in sections 10.1.1 and 10.1.2. For circular tunnels, no part of the calibration location may be closer to the tunnel wall than 10.2 cm (4 in.) or 25 percent of the tunnel diameter, whichever is farther from the wall. For elliptical or rectangular tunnels, no part of the calibration location may be closer to the tunnel wall than 10.2 cm (4 in.) or 25 percent of the applicable cross-sectional axis, whichever is farther from the wall.

3.22 *Wind Tunnel with Documented Axial Flow.* A wind tunnel facility documented as meeting the provisions of sections 10.1.1 (velocity pressure cross-check) and 10.1.2 (axial flow verification) using the procedures described in these sections or alternative procedures determined to be technically equivalent.

3.23 *Yaw Angle.* The angle between the axis of the stack or duct and the yaw component of flow, i.e., the component of the total velocity vector in a plane perpendicular to the traverse line at a particular traverse point. (Figure 2G–1 illustrates the ''yaw plane.'') From the standpoint of a tester facing a test port in a vertical stack, the yaw component of flow is the vector of flow moving to the left or right from the center of the stack as viewed by the tester. (This is sometimes referred to as ''vortex flow,'' i.e., flow around the centerline of a stack or duct.) The yaw angle is the angle described by this yaw component of flow and the vertical axis of the stack. The algebraic sign convention is illustrated in Figure 2G–2.

3.24 *Yaw Nulling.* A procedure in which a Type-S pitot tube or a 3–D probe is rotated about its axis in a stack or duct until a zero differential pressure reading (''yaw null'') is obtained. When a Type S probe is yaw-nulled, the rotational position of its impact port is 90° from the direction of flow in the stack or duct and the ΔP reading is zero. When a 3–D probe is yaw-nulled, its impact pressure port (P_1) faces directly into the direction of flow in the stack or duct and the differential pressure between pressure ports P_2 and P_3 is zero.

4.0 Interferences [Reserved]

5.0 Safety

5.1 This test method may involve hazardous operations and the use of hazardous materials or equipment. This method does not purport to address all of the safety problems associated with its use. It is the responsibility of the user to establish and implement appropriate safety and health practices and to determine the applicability of regulatory limitations before using this test method.

6.0 Equipment and Supplies

6.1 Two-dimensional Probes. Probes that provide both the velocity pressure and the yaw angle of the flow vector in a stack or duct, as listed in sections 6.1.1 and 6.1.2, qualify for use based on comprehensive wind tunnel and field studies involving both inter-and intra-probe comparisons by multiple test teams. Each 2–D probe shall have a unique identification number or code permanently marked on the main probe sheath. Each probe shall be calibrated prior to use according to the procedures in section 10. Manufacturer-supplied calibration data shall be used as example information only, except when the manufacturer calibrates the probe as specified in section 10 and provides complete documentation.

6.1.1 Type S (Stausscheibe or reverse type) pitot tube. This is the same as specified in Method 2, section 2.1, except for the following additional specifications that enable the pitot tube to accurately determine the yaw component of flow. For the purposes of this method, the external diameter of the tubing used to construct the Type S pitot tube (dimension D_t in Figure 2–2 of Method 2) shall be no less than 9.5 mm (3/8 in.). The pitot tube shall also meet the following alignment specifications. The angles α_1, α_2, β_1, and β_2, as shown in Method 2, Figure 2–3, shall not exceed ±2°. The dimensions w and z, shown in Method 2, Figure 2–3 shall not exceed 0.5 mm (0.02 in.).

6.1.1.1 Manual Type S probe. This refers to a Type S probe that is positioned at individual traverse points and yaw nulled manually by an operator.

6.1.1.2 Automated Type S probe. This refers to a system that uses a computer-controlled motorized mechanism to position the Type S pitot head at individual traverse points and perform yaw angle determinations.

6.1.2 Three-dimensional probes used in 2–D mode. A 3–D probe, as specified in sections 6.1.1 through 6.1.3 of Method 2F, may, for the

purposes of this method, be used in a two-dimensional mode (i.e., measuring yaw angle, but not pitch angle). When the 3–D probe is used as a 2–D probe, only the velocity pressure and yaw-null pressure are obtained using the pressure taps referred to as P_1, P_2, and P_3. The differential pressure P_1–P_2 is a function of total velocity and corresponds to the ΔP obtained using the Type S probe. The differential pressure P_2–P_3 is used to yaw null the probe and determine the yaw angle. The differential pressure P_4–P_5, which is a function of pitch angle, is not measured when the 3–D probe is used in 2–D mode.

6.1.3 Other probes. [Reserved]

6.1.4 Probe sheath. The probe shaft shall include an outer sheath to: (1) provide a surface for inscribing a permanent reference scribe line, (2) accommodate attachment of an angle-measuring device to the probe shaft, and (3) facilitate precise rotational movement of the probe for determining yaw angles. The sheath shall be rigidly attached to the probe assembly and shall enclose all pressure lines from the probe head to the farthest position away from the probe head where an angle-measuring device may be attached during use in the field. The sheath of the fully assembled probe shall be sufficiently rigid and straight at all rotational positions such that, when one end of the probe shaft is held in a horizontal position, the fully extended probe meets the horizontal straightness specifications indicated in section 8.2 below.

6.1.5 Scribe lines.

6.1.5.1 Reference scribe line. A permanent line, no greater than 1.6 mm (1/16 in.) in width, shall be inscribed on each manual probe that will be used to determine yaw angles of flow. This line shall be placed on the main probe sheath in accordance with the procedures described in section 10.4 and is used as a reference position for installation of the yaw angle-measuring device on the probe. At the discretion of the tester, the scribe line may be a single line segment placed at a particular position on the probe sheath (e.g., near the probe head), multiple line segments placed at various locations along the length of the probe sheath (e.g., at every position where a yaw angle-measuring device may be mounted), or a single continuous line extending along the full length of the probe sheath.

6.1.5.2 Scribe line on probe extensions. A permanent line may also be inscribed on any probe extension that will be attached to the main probe in performing field testing. This allows a yaw angle-measuring device mounted on the extension to be readily aligned with the reference scribe line on the main probe sheath.

6.1.5.3 Alignment specifications. This specification shall be met separately, using the procedures in section 10.4.1, on the main probe and on each probe extension. The rotational position of the scribe line or scribe line segments on the main probe or any probe extension must not vary by more than 2°. That is, the difference between the minimum and maximum of all of the rotational angles that are measured along the full length of the main probe or the probe extension must not exceed 2°.

6.1.6 Probe and system characteristics to ensure horizontal stability.

6.1.6.1 For manual probes, it is recommended that the effective length of the probe (coupled with a probe extension, if necessary) be at least 0.9 m (3 ft.) longer than the farthest traverse point mark on the probe shaft away from the probe head. The operator should maintain the probe's horizontal stability when it is fully inserted into the stack or duct. If a shorter probe is used, the probe should be inserted through a bushing sleeve, similar to the one shown in Figure 2G–3, that is installed on the test port; such a bushing shall fit snugly around the probe and be secured to the stack or duct entry port in such a manner as to maintain the probe's horizontal stability when fully inserted into the stack or duct.

6.1.6.2 An automated system that includes an external probe casing with a transport system shall have a mechanism for maintaining horizontal stability comparable to that obtained by manual probes following the provisions of this method. The automated probe assembly shall also be constructed to maintain the alignment and position of the pressure ports during sampling at each traverse point. The design of the probe casing and transport system shall allow the probe to be removed from the stack or duct and checked through direct physical measurement for angular position and insertion depth.

6.1.7 The tubing that is used to connect the probe and the pressure-measuring device should have an inside diameter of at least 3.2 mm (⅛ in.), to reduce the time required for pressure equilibration, and should be as short as practicable.

6.1.8 If a detachable probe head without a sheath [e.g., a pitot tube, typically 15.2 to 30.5 cm (6 to 12 in.) in length] is coupled with a probe sheath and calibrated in a wind tunnel in accordance with the yaw angle calibration procedure in section 10.5, the probe head shall remain attached to the probe sheath during field testing in the same configuration and orientation as calibrated. Once the detachable probe head is uncoupled or re-oriented, the yaw angle calibration of the probe is no longer valid and must be repeated before using the probe in subsequent field tests.

6.2 Yaw Angle-measuring Device. One of the following devices shall be used for measurement of the yaw angle of flow.

6.2.1 Digital inclinometer. This refers to a digital device capable of measuring and displaying the rotational position of the probe to within ±1°. The device shall be able to be locked into position on the probe sheath or probe extension, so that it indicates the probe's rotational position throughout the test. A rotational position collar block that can be attached to the probe sheath (similar to the collar shown in Figure 2G–4) may be required to lock the digital inclinometer into position on the probe sheath.

6.2.2 Protractor wheel and pointer assembly. This apparatus, similar to that shown in Figure 2G–5, consists of the following components.

6.2.2.1 A protractor wheel that can be attached to a port opening and set in a fixed rotational position to indicate the yaw angle position of the probe's scribe line relative to the longitudinal axis of the stack or duct. The protractor wheel must have a measurement ring on its face that is no less than 17.8 cm (7 in.) in diameter, shall be able to be rotated to any angle and then locked into position on the stack or duct test port, and shall indicate angles to a resolution of 1°.

6.2.2.2 A pointer assembly that includes an indicator needle mounted on a collar that can slide over the probe sheath and be locked into a fixed rotational position on the probe sheath. The pointer needle shall be of sufficient length, rigidity, and sharpness to allow the tester to determine the probe's angular position to within 1° from the markings on the protractor wheel. Corresponding to the position of the pointer, the collar must have a scribe line to be used in aligning the pointer with the scribe line on the probe sheath.

6.2.3 Other yaw angle-measuring devices. Other angle-measuring devices with a manufacturer's specified precision of 1° or better may be used, if approved by the Administrator.

6.3 Probe Supports and Stabilization Devices. When probes are used for determining flow angles, the probe head should be kept in a stable horizontal position. For probes longer than 3.0 m (10 ft.), the section of the probe that extends outside the test port shall be secured. Three alternative devices are suggested for maintaining the horizontal position and stability of the probe shaft during flow angle determinations and velocity pressure measurements: (1) monorails installed above each port, (2) probe stands on which the probe shaft may be rested, or (3) bushing sleeves of sufficient length secured to the test ports to maintain probes in a horizontal position. Comparable provisions shall be made to ensure that automated systems maintain the horizontal position of the probe in the stack or duct. The physical characteristics of each test platform may dictate the most suitable type of stabilization device. Thus, the choice of a specific stabilization device is left to the judgement of the testers.

6.4 Differential Pressure Gauges. The velocity pressure (ΔP) measuring devices used during wind tunnel calibrations and field testing shall be either electronic manometers (e.g., pressure transducers), fluid manometers, or mechanical pressure gauges (e.g., MagnehelicΔ gauges). Use of electronic manometers is recommended. Under low velocity conditions, use of electronic manometers may be necessary to obtain acceptable measurements.

6.4.1 Differential pressure-measuring device. This refers to a device capable of measuring pressure differentials and having a readability of ±1 percent of full scale. The device shall be capable of accurately measuring the maximum expected pressure differential. Such devices are used to determine the following pressure measurements: velocity pressure, static pressure, and yaw-null pressure. For an inclined-vertical manometer, the readability specification of ±1 percent shall be met separately using the respective full-scale upper limits of the inclined anvertical portions of the scales. To the extent practicable, the device shall be selected such that most of the pressure readings are between 10 and 90 percent of the device's full-scale measurement range (as defined in section 3.4). In addition, pressure-measuring devices should be selected such that the zero does not drift by more than 5 percent of the average expected pressure readings to be encountered during the field test. This is particularly important under low pressure conditions.

6.4.2 Gauge used for yaw nulling. The differential pressure-measuring device chosen for yaw nulling the probe during the wind tunnel calibrations and field testing shall be bi-directional, i.e., capable of reading both positive and negative differential pressures. If a mechanical, bi-directional pressure gauge is chosen, it shall have a full-scale range no greater than 2.6 cm (i.e., −1.3 to +1.3 cm) [1 in. H_2O (i.e., −0.5 in. to +0.5 in.)].

6.4.3 Devices for calibrating differential pressure-measuring devices. A precision manometer (e.g., a U-tube, inclined, or inclined-vertical manometer, or micromanometer) or NIST (National Institute of Standards and Technology) traceable pressure source shall be used for calibrating differential pressure-measuring devices. The device shall be maintained under laboratory conditions or in a similar protected environment (e.g., a climate-controlled trailer). It shall not be used in field tests. The precision manometer shall have a scale gradation of 0.3 mm H_2O (0.01 in. H_2O), or less, in the range of 0 to 5.1 cm H_2O (0 to 2 in. H_2O) and 2.5 mm H_2O (0.1 in. H_2O), or less, in the range of 5.1 to 25.4 cm H_2O (2 to 10 in. H_2O). The manometer shall have manufacturer's documentation that it meets an accuracy specification of at least 0.5 percent of full scale. The NIST-traceable pressure source shall be recertified annually.

6.4.4 Devices used for post-test calibration check. A precision manometer meeting the specifications in section 6.4.3, a pressure-measuring device or pressure source with a documented calibration traceable to NIST, or an equivalent device approved by the Administrator shall be used for the post-test calibration check. The pressure-measuring device shall have a readability equivalent to or greater than the tested device. The pressure source shall be capable of generating pressures between 50 and 90 percent of the range of the tested device and known to within ±1 percent of the full scale of the tested device. The pressure source shall be recertified annually.

6.5 Data Display and Capture Devices. Electronic manometers (if used) shall be coupled with a data display device (such as a digital panel meter, personal computer display, or strip chart) that allows the tester to observe and validate the pressure measurements taken during testing. They shall also be connected to a data recorder (such as a data logger or a personal computer with data capture software) that has the ability to compute and retain the appropriate average value at each traverse point, identified by collection time and traverse point.

6.6 Temperature Gauges. For field tests, a thermocouple or resistance temperature detector (RTD) capable of measuring temperature to within ±3°C (±5°F) of the stack or duct temperature shall be used. The thermocouple shall be attached to the probe such that the sensor tip does not touch any metal. The position of the thermocouple relative to the pressure port face openings shall be in the same configuration as used for the probe calibrations in the wind tunnel. Temperature gauges used for wind tunnel calibrations shall be capable of measuring temperature to within ±0.6°C (±1°F) of the temperature of the flowing gas stream in the wind tunnel.

6.7 Stack or Duct Static Pressure Measurement. The pressure-measuring device used with the probe shall be as specified in section 6.4 of this method. The static tap of a standard (Prandtl type) pitot tube or one leg of a Type S pitot tube with the face opening planes positioned parallel to the gas flow may be used for this measurement. Also acceptable is the pressure differential reading of P_1-P_{bar} from a five-hole prism-shaped 3–D probe, as specified in section 6.1.1 of Method 2F (such as the Type DA or DAT probe), with the P_1 pressure port face opening positioned parallel to the gas flow in the same manner as the Type S probe. However, the 3–D spherical probe, as specified in section 6.1.2 of Method 2F, is unable to provide this measurement and shall not be used to take static pressure measurements. Static pressure measurement is further described in section 8.11.

6.8 Barometer. Same as Method 2, section 2.5.

6.9 Gas Density Determination Equipment. Method 3 or 3A shall be used to determine the dry molecular weight of the stack or duct gas. Method 4 shall be used for moisture content determination and computation of stack or duct gas wet molecular weight. Other methods may be used, if approved by the Administrator.

6.10 Calibration Pitot Tube. Same as Method 2, section 2.7.

6.11 Wind Tunnel for Probe Calibration. Wind tunnels used to calibrate velocity probes must meet the following design specifications.

6.11.1 Test section cross-sectional area. The flowing gas stream shall be confined within a circular, rectangular, or elliptical duct. The cross-sectional area of the tunnel must be large enough to ensure fully developed flow in the presence of both the calibration pitot tube and the tested probe. The calibration site, or ''test section,'' of the wind tunnel shall have a minimum diameter of 30.5 cm (12 in.) for circular or elliptical duct cross-sections or a minimum width of 30.5 cm (12 in.) on the shorter side for rectangular cross-sections. Wind tunnels shall meet the probe blockage provisions of this section and the qualification requirements prescribed in section 10.1. The projected area of the portion of the probe head, shaft, and attached devices inside the wind tunnel during calibration shall represent no more than 4 percent of the cross-sectional area of the tunnel. The projected area shall include the combined area of the calibration pitot tube and the tested probe if both probes are placed simultaneously in the same cross-sectional plane in the wind tunnel, or the larger projected area of the two probes if they are placed alternately in the wind tunnel.

6.11.2 Velocity range and stability. The wind tunnel should be capable of maintaining velocities between 6.1 m/sec and 30.5 m/sec (20 ft/sec and 100 ft/sec). The wind tunnel shall produce fully developed flow patterns that are stable and parallel to the axis of the duct in the test section.

6.11.3 Flow profile at the calibration location. The wind tunnel shall provide axial flow within the test section calibration location (as defined in section 3.21). Yaw and pitch angles in the calibration location shall be within ±3° of 0°. The procedure for determining that this requirement has been met is described in section 10.1.2.

6.11.4 Entry ports in the wind tunnel test section.

6.11.4.1 Port for tested probe. A port shall be constructed for the tested probe. This port shall be located to allow the head of the tested probe to be positioned within the wind tunnel calibration location (as defined in section 3.21). The tested probe shall be able to be locked into the 0° pitch angle position. To facilitate alignment of the probe during calibration, the test section should include a

window constructed of a transparent material to allow the tested probe to be viewed.

6.11.4.2 Port for verification of axial flow. Depending on the equipment selected to conduct the axial flow verification prescribed in section 10.1.2, a second port, located 90° from the entry port for the tested probe, may be needed to allow verification that the gas flow is parallel to the central axis of the test section. This port should be located and constructed so as to allow one of the probes described in section 10.1.2.2 to access the same test point(s) that are accessible from the port described in section 6.11.4.1.

6.11.4.3 Port for calibration pitot tube. The calibration pitot tube shall be used in the port for the tested probe or in a separate entry port. In either case, all measurements with the calibration pitot tube shall be made at the same point within the wind tunnel over the course of a probe calibration. The measurement point for the calibration pitot tube shall meet the same specifications for distance from the wall and for axial flow as described in section 3.21 for the wind tunnel calibration location.

7.0 Reagents and Standards [Reserved]

8.0 Sample Collection and Analysis

8.1 Equipment Inspection and Set Up

8.1.1 All 2–D and 3–D probes, differential pressure-measuring devices, yaw angle-measuring devices, thermocouples, and barometers shall have a current, valid calibration before being used in a field test. (See sections 10.3.3, 10.3.4, and 10.5 through 10.10 for the applicable calibration requirements.)

8.1.2 Before each field use of a Type S probe, perform a visual inspection to verify the physical condition of the pitot tube. Record the results of the inspection. If the face openings are noticeably misaligned or there is visible damage to the face openings, the probe shall not be used until repaired, the dimensional specifications verified (according to the procedures in section 10.2.1), and the probe recalibrated.

8.1.3 Before each field use of a 3–D probe, perform a visual inspection to verify the physical condition of the probe head according to the procedures in section 10.2 of Method 2F. Record the inspection results on a form similar to Table 2F–1 presented in Method 2F. If there is visible damage to the 3–D probe, the probe shall not be used until it is recalibrated.

8.1.4 After verifying that the physical condition of the probe head is acceptable, set up the apparatus using lengths of flexible tubing that are as short as practicable. Surge tanks installed between the probe and pressure-measuring device may be used to dampen pressure fluctuations provided that an adequate measurement system response time (see section 8.8) is maintained.

8.2 Horizontal Straightness Check. A horizontal straightness check shall be performed before the start of each field test, except as otherwise specified in this section. Secure the fully assembled probe (including the probe head and all probe shaft extensions) in a horizontal position using a stationary support at a point along the probe shaft approximating the location of the stack or duct entry port when the probe is sampling at the farthest traverse point from the stack or duct wall. The probe shall be rotated to detect bends. Use an angle-measuring device or trigonometry to determine the bend or sag between the probe head and the secured end. (See Figure 2G–6.) Probes that are bent or sag by more than 5° shall not be used. Although this check does not apply when the probe is used for a vertical traverse, care should be taken to avoid the use of bent probes when conducting vertical traverses. If the probe is constructed of a rigid steel material and consists of a main probe without probe extensions, this check need only be performed before the initial field use of the probe, when the probe is recalibrated, when a change is made to the design or material of the probe assembly, and when the probe becomes bent. With such probes, a visual inspection shall be made of the fully assembled probe before each field test to determine if a bend is visible. The probe shall be rotated to detect bends. The inspection results shall be documented in the field test report. If a bend in the probe is visible, the horizontal straightness check shall be performed before the probe is used.

8.3 Rotational Position Check. Before each field test, and each time an extension is added to the probe during a field test, a rotational position check shall be performed on all manually operated probes (except as noted in section 8.3.5 below) to ensure that, throughout testing, the angle-measuring device is either: aligned to within ±1° of the rotational position of the reference scribe line; or is affixed to the probe such that the rotational offset of the device from the reference scribe line is known to within ±1°. This check shall consist of direct measurements of the rotational positions of the reference scribe line and angle-measuring device sufficient to verify that these specifications are met. Annex A in section 18 of this method gives recommended procedures for performing the rotational position check, and Table 2G–2 gives an example data form. Procedures other than those recommended in Annex A in section 18 may be used, provided they demonstrate whether the alignment specification is met and are explained in detail in the field test report.

8.3.1 Angle-measuring device rotational offset. The tester shall maintain a record of the angle-measuring device rotational offset, R_{ADO}, as defined in section 3.1. Note that R_{ADO} is assigned a value of 0° when the angle-

measuring device is aligned to within ±1° of the rotational position of the reference scribe line. The R_{ADO} shall be used to determine the yaw angle of flow in accordance with section 8.9.4.

8.3.2 Sign of angle-measuring device rotational offset. The sign of R_{ADO} is positive when the angle-measuring device (as viewed from the ''tail'' end of the probe) is positioned in a clockwise direction from the reference scribe line and negative when the device is positioned in a counterclockwise direction from the reference scribe line.

8.3.3 Angle-measuring devices that can be independently adjusted (e.g., by means of a set screw), after being locked into position on the probe sheath, may be used. However, the R_{ADO} must also take into account this adjustment.

8.3.4 Post-test check. If probe extensions remain attached to the main probe throughout the field test, the rotational position check shall be repeated, at a minimum, at the completion of the field test to ensure that the angle-measuring device has remained within ±2° of its rotational position established prior to testing. At the discretion of the tester, additional checks may be conducted after completion of testing at any sample port or after any test run. If the ±2° specification is not met, all measurements made since the last successful rotational position check must be repeated. Section 18.1.1.3 of Annex A provides an example procedure for performing the post-test check.

8.3.5 Exceptions.

8.3.5.1 A rotational position check need not be performed if, for measurements taken at all velocity traverse points, the yaw angle-measuring device is mounted and aligned directly on the reference scribe line specified in sections 6.1.5.1 and 6.1.5.3 and no independent adjustments, as described in section 8.3.3, are made to device's rotational position.

8.3.5.2 If extensions are detached and reattached to the probe during a field test, a rotational position check need only be performed the first time an extension is added to the probe, rather than each time the extension is re-attached, if the probe extension is designed to be locked into a mechanically fixed rotational position (e.g., through the use of interlocking grooves), that can re-establish the initial rotational position to within ±1°.

8.4 Leak Checks. A pre-test leak check shall be conducted before each field test. A post-test check shall be performed at the end of the field test, but additional leak checks may be conducted after any test run or group of test runs. The post-test check may also serve as the pre-test check for the next group of test runs. If any leak check is failed, all runs since the last passed leak check are invalid. While performing the leak check procedures, also check each pressure device's responsiveness to changes in pressure.

8.4.1 To perform the leak check on a Type S pitot tube, pressurize the pitot impact opening until at least 7.6 cm H_2O (3 in. H_2O) velocity pressure, or a pressure corresponding to approximately 75 percent of the pressure device's measurement scale, whichever is less, registers on the pressure device; then, close off the impact opening. The pressure shall remain stable (±2.5 mm H_2O, ±0.10 in. H_2O) for at least 15 seconds. Repeat this procedure for the static pressure side, except use suction to obtain the required pressure. Other leak-check procedures may be used, if approved by the Administrator.

8.4.2 To perform the leak check on a 3–D probe, pressurize the probe's impact (P_1) opening until at least 7.6 cm H_2O (3 in. H_2O) velocity pressure, or a pressure corresponding to approximately 75 percent of the pressure device's measurement scale, whichever is less, registers on the pressure device; then, close off the impact opening. The pressure shall remain stable (±2.5 mm H_2O, ±0.10 in. H_2O) for at least 15 seconds. Check the P_2 and P_3 pressure ports in the same fashion. Other leak-check procedures may be used, if approved by the Administrator.

8.5 Zeroing the Differential Pressure-measuring Device. Zero each differential pressure-measuring device, including the device used for yaw nulling, before each field test. At a minimum, check the zero after each field test. A zero check may also be performed after any test run or group of test runs. For fluid manometers and mechanical pressure gauges (e.g., MagnehelicΔ gauges), the zero reading shall not deviate from zero by more than ±0.8 mm H_2O (±0.03 in. H_2O) or one minor scale division, whichever is greater, between checks. For electronic manometers, the zero reading shall not deviate from zero between checks by more than: ±0.3 mm H_2O (±0.01 in. H_2O), for full scales less than or equal to 5.1 cm H_2O (2.0 in. H_2O); or ±0.8 mm H_2O (±0.03 in. H_2O), for full scales greater than 5.1 cm H_2O (2.0 in. H_2O). (NOTE: If negative zero drift is not directly readable, estimate the reading based on the position of the gauge oil in the manometer or of the needle on the pressure gauge.) In addition, for all pressure-measuring devices except those used exclusively for yaw nulling, the zero reading shall not deviate from zero by more than 5 percent of the average measured differential pressure at any distinct process condition or load level. If any zero check is failed at a specific process condition or load level, all runs conducted at that process condition or load level since the last passed zero check are invalid.

8.6 Traverse Point Verification. The number and location of the traverse points shall be selected based on Method 1 guidelines.

The stack or duct diameter and port nipple lengths, including any extension of the port nipples into the stack or duct, shall be verified the first time the test is performed; retain and use this information for subsequent field tests, updating it as required. Physically measure the stack or duct dimensions or use a calibrated laser device; do not use engineering drawings of the stack or duct. The probe length necessary to reach each traverse point shall be recorded to within ±6.4 mm (±¼ in.) and, for manual probes, marked on the probe sheath. In determining these lengths, the tester shall take into account both the distance that the port flange projects outside of the stack and the depth that any port nipple extends into the gas stream. The resulting point positions shall reflect the true distances from the inside wall of the stack or duct, so that when the tester aligns any of the markings with the outside face of the stack port, the probe's impact port shall be located at the appropriate distance from the inside wall for the respective Method 1 traverse point. Before beginning testing at a particular location, an out-of-stack or duct verification shall be performed on each probe that will be used to ensure that these position markings are correct. The distances measured during the verification must agree with the previously calculated distances to within ±¼ in. For manual probes, the traverse point positions shall be verified by measuring the distance of each mark from the probe's impact pressure port (the P_1 port for a 3-D probe). A comparable out-of-stack test shall be performed on automated probe systems. The probe shall be extended to each of the prescribed traverse point positions. Then, the accuracy of the positioning for each traverse point shall be verified by measuring the distance between the port flange and the probe's impact pressure port.

8.7 Probe Installation. Insert the probe into the test port. A solid material shall be used to seal the port.

8.8 System Response Time. Determine the response time of the probe measurement system. Insert and position the ''cold'' probe (at ambient temperature and pressure) at any Method 1 traverse point. Read and record the probe differential pressure, temperature, and elapsed time at 15-second intervals until stable readings for both pressure and temperature are achieved. The response time is the longer of these two elapsed times. Record the response time.

8.9 Sampling.

8.9.1 Yaw angle measurement protocol. With manual probes, yaw angle measurements may be obtained in two alternative ways during the field test, either by using a yaw angle-measuring device (e.g., digital inclinometer) affixed to the probe, or using a protractor wheel and pointer assembly. For horizontal traversing, either approach may be used. For vertical traversing, i.e., when measuring from on top or into the bottom of a horizontal duct, only the protractor wheel and pointer assembly may be used. With automated probes, curve-fitting protocols may be used to obtain yaw-angle measurements.

8.9.1.1 If a yaw angle-measuring device affixed to the probe is to be used, lock the device on the probe sheath, aligning it either on the reference scribe line or in the rotational offset position established under section 8.3.1.

8.9.1.2 If a protractor wheel and pointer assembly is to be used, follow the procedures in Annex B of this method.

8.9.1.3 Curve-fitting procedures. Curve-fitting routines sweep through a range of yaw angles to create curves correlating pressure to yaw position. To find the zero yaw position and the yaw angle of flow, the curve found in the stack is computationally compared to a similar curve that was previously generated under controlled conditions in a wind tunnel. A probe system that uses a curve-fitting routine for determining the yaw-null position of the probe head may be used, provided that it is verified in a wind tunnel to be able to determine the yaw angle of flow to within ±1°.

8.9.1.4 Other yaw angle determination procedures. If approved by the Administrator, other procedures for determining yaw angle may be used, provided that they are verified in a wind tunnel to be able to perform the yaw angle calibration procedure as described in section 10.5.

8.9.2 Sampling strategy. At each traverse point, first yaw-null the probe, as described in section 8.9.3, below. Then, with the probe oriented into the direction of flow, measure and record the yaw angle, the differential pressure and the temperature at the traverse point, after stable readings are achieved, in accordance with sections 8.9.4 and 8.9.5. At the start of testing in each port (i.e., after a probe has been inserted into the flue gas stream), allow at least the response time to elapse before beginning to take measurements at the first traverse point accessed from that port. Provided that the probe is not removed from the flue gas stream, measurements may be taken at subsequent traverse points accessed from the same test port without waiting again for the response time to elapse.

8.9.3 Yaw-nulling procedure. In preparation for yaw angle determination, the probe must first be yaw nulled. After positioning the probe at the appropriate traverse point, perform the following procedures.

8.9.3.1 For Type S probes, rotate the probe until a null differential pressure reading is obtained. The direction of the probe rotation shall be such that the thermocouple is located downstream of the probe pressure ports at the yaw-null position. Rotate the

probe 90° back from the yaw-null position to orient the impact pressure port into the direction of flow. Read and record the angle displayed by the angle-measuring device.

8.9.3.2 For 3-D probes, rotate the probe until a null differential pressure reading (the difference in pressures across the P_2 and P_3 pressure ports is zero, i.e., $P_2=P_3$) is indicated by the yaw angle pressure gauge. Read and record the angle displayed by the angle-measuring device.

8.9.3.3 Sign of the measured angle. The angle displayed on the angle-measuring device is considered positive when the probe's impact pressure port (as viewed from the ''tail'' end of the probe) is oriented in a clockwise rotational position relative to the stack or duct axis and is considered negative when the probe's impact pressure port is oriented in a counterclockwise rotational position (see Figure 2G–7).

8.9.4 Yaw angle determination. After performing the applicable yaw-nulling procedure in section 8.9.3, determine the yaw angle of flow according to one of the following procedures. Special care must be observed to take into account the signs of the recorded angle reading and all offsets.

8.9.4.1 Direct-reading. If all rotational offsets are zero or if the angle-measuring device rotational offset (R_{ADO}) determined in section 8.3 exactly compensates for the scribe line rotational offset (R_{SLO}) determined in section 10.5, then the magnitude of the yaw angle is equal to the displayed angle-measuring device reading from section 8.9.3.1 or 8.9.3.2. The algebraic sign of the yaw angle is determined in accordance with section 8.9.3.3. [NOTE: Under certain circumstances (e.g., testing of horizontal ducts) a 90° adjustment to the angle-measuring device readings may be necessary to obtain the correct yaw angles.]

8.9.4.2 Compensation for rotational offsets during data reduction. When the angle-measuring device rotational offset does not compensate for reference scribe line rotational offset, the following procedure shall be used to determine the yaw angle:

(a) Enter the reading indicated by the angle-measuring device from section 8.9.3.1 or 8.9.3.2.

(b) Associate the proper algebraic sign from section 8.9.3.3 with the reading in step (a).

(c) Subtract the reference scribe line rotational offset, R_{SLO}, from the reading in step (b).

(d) Subtract the angle-measuring device rotational offset, R_{ADO}, if any, from the result obtained in step (c).

(e) The final result obtained in step (d) is the yaw angle of flow.

[NOTE: It may be necessary to first apply a 90° adjustment to the reading in step (a), in order to obtain the correct yaw angle.]

8.9.4.3 Record the yaw angle measurements on a form similar to Table 2G–3.

8.9.5 Impact velocity determination. Maintain the probe rotational position established during the yaw angle determination. Then, begin recording the pressure-measuring device readings. These pressure measurements shall be taken over a sampling period of sufficiently long duration to ensure representative readings at each traverse point. If the pressure measurements are determined from visual readings of the pressure device or display, allow sufficient time to observe the pulsation in the readings to obtain a sight-weighted average, which is then recorded manually. If an automated data acquisition system (e.g., data logger, computer-based data recorder, strip chart recorder) is used to record the pressure measurements, obtain an integrated average of all pressure readings at the traverse point. Stack or duct gas temperature measurements shall be recorded, at a minimum, once at each traverse point. Record all necessary data as shown in the example field data form (Table 2G–3).

8.9.6 Alignment check. For manually operated probes, after the required yaw angle and differential pressure and temperature measurements have been made at each traverse point, verify (e.g., by visual inspection) that the yaw angle-measuring device has remained in proper alignment with the reference scribe line or with the rotational offset position established in section 8.3. If, for a particular traverse point, the angle-measuring device is found to be in proper alignment, proceed to the next traverse point; otherwise, re-align the device and repeat the angle and differential pressure measurements at the traverse point. In the course of a traverse, if a mark used to properly align the angle-measuring device (e.g., as described in section 18.1.1.1) cannot be located, re-establish the alignment mark before proceeding with the traverse.

8.10 Probe Plugging. Periodically check for plugging of the pressure ports by observing the responses on the pressure differential readouts. Plugging causes erratic results or sluggish responses. Rotate the probe to determine whether the readouts respond in the expected direction. If plugging is detected, correct the problem and repeat the affected measurements.

8.11 Static Pressure. Measure the static pressure in the stack or duct using the equipment described in section 6.7.

8.11.1 If a Type S probe is used for this measurement, position the probe at or between any traverse point(s) and rotate the probe until a null differential pressure reading is obtained. Disconnect the tubing from one of the pressure ports; read and record the ΔP. For pressure devices with one-directional

scales, if a deflection in the positive direction is noted with the negative side disconnected, then the static pressure is positive. Likewise, if a deflection in the positive direction is noted with the positive side disconnected, then the static pressure is negative.

8.11.2 If a 3–D probe is used for this measurement, position the probe at or between any traverse point(s) and rotate the probe until a null differential pressure reading is obtained at P_2–P_3. Rotate the probe 90°. Disconnect the P_2 pressure side of the probe and read the pressure P_1–P_{bar} and record as the static pressure. (NOTE: The spherical probe, specified in section 6.1.2 of Method 2F, is unable to provide this measurement and shall not be used to take static pressure measurements.)

8.12 Atmospheric Pressure. Determine the atmospheric pressure at the sampling elevation during each test run following the procedure described in section 2.5 of Method 2.

8.13 Molecular Weight. Determine the stack or duct gas dry molecular weight. For combustion processes or processes that emit essentially CO_2, O_2, CO, and N_2, use Method 3 or 3A. For processes emitting essentially air, an analysis need not be conducted; use a dry molecular weight of 29.0. Other methods may be used, if approved by the Administrator.

8.14 Moisture. Determine the moisture content of the stack gas using Method 4 or equivalent.

8.15 Data Recording and Calculations. Record all required data on a form similar to Table 2G–3.

8.15.1 2–D probe calibration coefficient. When a Type S pitot tube is used in the field, the appropriate calibration coefficient as determined in section 10.6 shall be used to perform velocity calculations. For calibrated Type S pitot tubes, the A-side coefficient shall be used when the A-side of the tube faces the flow, and the B-side coefficient shall be used when the B-side faces the flow.

8.15.2 3–D calibration coefficient. When a 3–D probe is used to collect data with this method, follow the provisions for the calibration of 3–D probes in section 10.6 of Method 2F to obtain the appropriate velocity calibration coefficient (F_2 as derived using Equation 2F–2 in Method 2F) corresponding to a pitch angle position of 0°.

8.15.3 Calculations. Calculate the yaw-adjusted velocity at each traverse point using the equations presented in section 12.2. Calculate the test run average stack gas velocity by finding the arithmetic average of the point velocity results in accordance with sections 12.3 and 12.4, and calculate the stack gas volumetric flow rate in accordance with section 12.5 or 12.6, as applicable.

9.0 Quality Control

9.1 Quality Control Activities. In conjunction with the yaw angle determination and the pressure and temperature measurements specified in section 8.9, the following quality control checks should be performed.

9.1.1 Range of the differential pressure gauge. In accordance with the specifications in section 6.4, ensure that the proper differential pressure gauge is being used for the range of ΔP values encountered. If it is necessary to change to a more sensitive gauge, replace the gauge with a gauge calibrated according to section 10.3.3, perform the leak check described in section 8.4 and the zero check described in section 8.5, and repeat the differential pressure and temperature readings at each traverse point.

9.1.2 Horizontal stability check. For horizontal traverses of a stack or duct, visually check that the probe shaft is maintained in a horizontal position prior to taking a pressure reading. Periodically, during a test run, the probe's horizontal stability should be verified by placing a carpenter's level, a digital inclinometer, or other angle-measuring device on the portion of the probe sheath that extends outside of the test port. A comparable check should be performed by automated systems.

10.0 Calibration

10.1 Wind Tunnel Qualification Checks. To qualify for use in calibrating probes, a wind tunnel shall have the design features specified in section 6.11 and satisfy the following qualification criteria. The velocity pressure cross-check in section 10.1.1 and axial flow verification in section 10.1.2 shall be performed before the initial use of the wind tunnel and repeated immediately after any alteration occurs in the wind tunnel's configuration, fans, interior surfaces, straightening vanes, controls, or other properties that could reasonably be expected to alter the flow pattern or velocity stability in the tunnel. The owner or operator of a wind tunnel used to calibrate probes according to this method shall maintain records documenting that the wind tunnel meets the requirements of sections 10.1.1 and 10.1.2 and shall provide these records to the Administrator upon request.

10.1.1 Velocity pressure cross-check. To verify that the wind tunnel produces the same velocity at the tested probe head as at the calibration pitot tube impact port, perform the following cross-check. Take three differential pressure measurements at the fixed calibration pitot tube location, using the calibration pitot tube specified in section 6.10, and take three measurements with the calibration pitot tube at the wind tunnel calibration location, as defined in section 3.21. Alternate the measurements between the two positions. Perform this procedure at

the lowest and highest velocity settings at which the probes will be calibrated. Record the values on a form similar to Table 2G–4. At each velocity setting, the average velocity pressure obtained at the wind tunnel calibration location shall be within ±2 percent or 2.5 mm H_2O (0.01 in. H_2O), whichever is less restrictive, of the average velocity pressure obtained at the fixed calibration pitot tube location. This comparative check shall be performed at 2.5-cm (1-in.), or smaller, intervals across the full length, width, and depth (if applicable) of the wind tunnel calibration location. If the criteria are not met at every tested point, the wind tunnel calibration location must be redefined, so that acceptable results are obtained at every point. Include the results of the velocity pressure cross-check in the calibration data section of the field test report. (See section 16.1.4.)

10.1.2 Axial flow verification. The following procedures shall be performed to demonstrate that there is fully developed axial flow within the wind tunnel calibration location and at the calibration pitot tube location. Two options are available to conduct this check.

10.1.2.1 Using a calibrated 3–D probe. A probe that has been previously calibrated in a wind tunnel with documented axial flow (as defined in section 3.22) may be used to conduct this check. Insert the calibrated 3–D probe into the wind tunnel test section using the tested probe port. Following the procedures in sections 8.9 and 12.2 of Method 2F, determine the yaw and pitch angles at all the point(s) in the test section where the velocity pressure cross-check, as specified in section 10.1.1, is performed. This includes all the points in the calibration location and the point where the calibration pitot tube will be located. Determine the yaw and pitch angles at each point. Repeat these measurements at the highest and lowest velocities at which the probes will be calibrated. Record the values on a form similar to Table 2G–5. Each measured yaw and pitch angle shall be within ±3° of 0°. Exceeding the limits indicates unacceptable flow in the test section. Until the problem is corrected and acceptable flow is verified by repetition of this procedure, the wind tunnel shall not be used for calibration of probes. Include the results of the axial flow verification in the calibration data section of the field test report. (See section 16.1.4.)

10.1.2.2 Using alternative probes. Axial flow verification may be performed using an uncalibrated prism-shaped 3–D probe (e.g., DA or DAT probe) or an uncalibrated wedge probe. (Figure 2G–8 illustrates a typical wedge probe.) This approach requires use of two ports: the tested probe port and a second port located 90° from the tested probe port. Each port shall provide access to all the points within the wind tunnel test section where the velocity pressure cross-check, as specified in section 10.1.1, is conducted. The probe setup shall include establishing a reference yaw-null position on the probe sheath to serve as the location for installing the angle-measuring device. Physical design features of the DA, DAT, and wedge probes are relied on to determine the reference position. For the DA or DAT probe, this reference position can be determined by setting a digital inclinometer on the flat facet where the P_1 pressure port is located and then identifying the rotational position on the probe sheath where a second angle-measuring device would give the same angle reading. The reference position on a wedge probe shaft can be determined either geometrically or by placing a digital inclinometer on each side of the wedge and rotating the probe until equivalent readings are obtained. With the latter approach, the reference position is the rotational position on the probe sheath where an angle-measuring device would give a reading of 0°. After installation of the angle-measuring device in the reference yaw-null position on the probe sheath, determine the yaw angle from the tested port. Repeat this measurement using the 90° offset port, which provides the pitch angle of flow. Determine the yaw and pitch angles at all the point(s) in the test section where the velocity pressure cross-check, as specified in section 10.1.1, is performed. This includes all the points in the wind tunnel calibration location and the point where the calibration pitot tube will be located. Perform this check at the highest and lowest velocities at which the probes will be calibrated. Record the values on a form similar to Table 2G–5. Each measured yaw and pitch angle shall be within ±3° of 0°. Exceeding the limits indicates unacceptable flow in the test section. Until the problem is corrected and acceptable flow is verified by repetition of this procedure, the wind tunnel shall not be used for calibration of probes. Include the results in the probe calibration report.

10.1.3 Wind tunnel audits.

10.1.3.1 Procedure. Upon the request of the Administrator, the owner or operator of a wind tunnel shall calibrate a 2-D audit probe in accordance with the procedures described in sections 10.3 through 10.6. The calibration shall be performed at two velocities that encompass the velocities typically used for this method at the facility. The resulting calibration data shall be submitted to the Agency in an audit test report. These results shall be compared by the Agency to reference calibrations of the audit probe at the same velocity settings obtained at two different wind tunnels.

10.1.3.2 Acceptance criterion. The audited tunnel's calibration coefficient is acceptable if it is within ±3 percent of the reference calibrations obtained at each velocity setting by

one (or both) of the wind tunnels. If the acceptance criterion is not met at each calibration velocity setting, the audited wind tunnel shall not be used to calibrate probes for use under this method until the problems are resolved and acceptable results are obtained upon completion of a subsequent audit.

10.2 Probe Inspection.

10.2.1 Type S probe. Before each calibration of a Type S probe, verify that one leg of the tube is permanently marked A, and the other, B. Carefully examine the pitot tube from the top, side, and ends. Measure the angles (α_1, α_2, β_1, and β_2) and the dimensions (w and z) illustrated in Figures 2–2 and 2–3 in Method 2. Also measure the dimension A, as shown in the diagram in Table 2G–1, and the external tubing diameter (dimension D_t, Figure 2–2b in Method 2). For the purposes of this method, D_t shall be no less than 9.5 mm (⅜ in.). The base-to-opening plane distances P_A and P_B in Figure 2–3 of Method 2 shall be equal, and the dimension A in Table 2G–1 should be between $2.10D_t$ and $3.00D_t$. Record the inspection findings and probe measurements on a form similar to Table CD2–1 of the ''Quality Assurance Handbook for Air Pollution Measurement Systems: Volume III, Stationary Source-Specific Methods'' (EPA/600/R–94/038c, September 1994). For reference, this form is reproduced herein as Table 2G–1. The pitot tube shall not be used under this method if it fails to meet the specifications in this section and the alignment specifications in section 6.1.1. All Type S probes used to collect data with this method shall be calibrated according to the procedures outlined in sections 10.3 through 10.6 below. During calibration, each Type S pitot tube shall be configured in the same manner as used, or planned to be used, during the field test, including all components in the probe assembly (e.g., thermocouple, probe sheath, sampling nozzle). Probe shaft extensions that do not affect flow around the probe head need not be attached during calibration.

10.2.2 3-D probe. If a 3-D probe is used to collect data with this method, perform the pre-calibration inspection according to procedures in Method 2F, section 10.2.

10.3 Pre-Calibration Procedures. Prior to calibration, a scribe line shall have been placed on the probe in accordance with section 10.4. The yaw angle and velocity calibration procedures shall not begin until the pretest requirements in sections 10.3.1 through 10.3.4 have been met.

10.3.1 Perform the horizontal straightness check described in section 8.2 on the probe assembly that will be calibrated in the wind tunnel.

10.3.2 Perform a leak check in accordance with section 8.4.

10.3.3 Except as noted in section 10.3.3.3, calibrate all differential pressure-measuring devices to be used in the probe calibrations, using the following procedures. At a minimum, calibrate these devices on each day that probe calibrations are performed.

10.3.3.1 Procedure. Before each wind tunnel use, all differential pressure-measuring devices shall be calibrated against the reference device specified in section 6.4.3 using a common pressure source. Perform the calibration at three reference pressures representing 30, 60, and 90 percent of the full-scale range of the pressure-measuring device being calibrated. For an inclined-vertical manometer, perform separate calibrations on the inclined and vertical portions of the measurement scale, considering each portion of the scale to be a separate full-scale range. [For example, for a manometer with a 0-to 2.5-cm H_2O (0-to 1-in. H_2O) inclined scale and a 2.5-to 12.7-cm H_2O (1-to 5-in. H_2O) vertical scale, calibrate the inclined portion at 7.6, 15.2, and 22.9 mm H_2O (0.3, 0.6, and 0.9 in. H_2O), and calibrate the vertical portion at 3.8, 7.6, and 11.4 cm H_2O (1.5, 3.0, and 4.5 in. H_2O).] Alternatively, for the vertical portion of the scale, use three evenly spaced reference pressures, one of which is equal to or higher than the highest differential pressure expected in field applications.

10.3.3.2 Acceptance criteria. At each pressure setting, the two pressure readings made using the reference device and the pressure-measuring device being calibrated shall agree to within ±2 percent of full scale of the device being calibrated or 0.5 mm H_2O (0.02 in. H_2O), whichever is less restrictive. For an inclined-vertical manometer, these requirements shall be met separately using the respective full-scale upper limits of the inclined and vertical portions of the scale. Differential pressure-measuring devices not meeting the ±2 percent of full scale or 0.5 mm H_2O (0.02 in. H_2O) calibration requirement shall not be used.

10.3.3.3 Exceptions. Any precision manometer that meets the specifications for a reference device in section 6.4.3 and that is not used for field testing does not require calibration, but must be leveled and zeroed before each wind tunnel use. Any pressure device used exclusively for yaw nulling does not require calibration, but shall be checked for responsiveness to rotation of the probe prior to each wind tunnel use.

10.3.4 Calibrate digital inclinometers on each day of wind tunnel or field testing (prior to beginning testing) using the following procedures. Calibrate the inclinometer according to the manufacturer's calibration procedures. In addition, use a triangular block (illustrated in Figure 2G–9) with a known angle θ, independently determined using a protractor or equivalent device, between two adjacent sides to verify the inclinometer readings. (NOTE: If other angle-measuring devices meeting the provisions of

section 6.2.3 are used in place of a digital inclinometer, comparable calibration procedures shall be performed on such devices.) Secure the triangular block in a fixed position. Place the inclinometer on one side of the block (side A) to measure the angle of inclination (R_1). Repeat this measurement on the adjacent side of the block (side B) using the inclinometer to obtain a second angle reading (R_2). The difference of the sum of the two readings from 180° (i.e., $180°-R_1-R_2$) shall be within ±2° of the known angle, θ.

10.4 Placement of Reference Scribe Line. Prior to the first calibration of a probe, a line shall be permanently inscribed on the main probe sheath to serve as a reference mark for determining yaw angles. Annex C in section 18 of this method gives a guideline for placement of the reference scribe line.

10.4.1 This reference scribe line shall meet the specifications in sections 6.1.5.1 and 6.1.5.3 of this method. To verify that the alignment specification in section 6.1.5.3 is met, secure the probe in a horizontal position and measure the rotational angle of each scribe line and scribe line segment using an angle-measuring device that meets the specifications in section 6.2.1 or 6.2.3. For any scribe line that is longer than 30.5 cm (12 in.), check the line's rotational position at 30.5-cm (12-in.) intervals. For each line segment that is 12 in. or less in length, check the rotational position at the two endpoints of the segment. To meet the alignment specification in section 6.1.5.3, the minimum and maximum of all of the rotational angles that are measured along the full length of main probe must not differ by more than 2°. (NOTE: A short reference scribe line segment [e.g., 15.2 cm (6 in.) or less in length] meeting the alignment specifications in section 6.1.5.3 is fully acceptable under this method. See section 18.1.1.1 of Annex A for an example of a probe marking procedure, suitable for use with a short reference scribe line.)

10.4.2 The scribe line should be placed on the probe first and then its offset from the yaw-null position established (as specified in section 10.5). The rotational position of the reference scribe line relative to the yaw-null position of the probe, as determined by the yaw angle calibration procedure in section 10.5, is the reference scribe line rotational offset, R_{SLO}. The reference scribe line rotational offset shall be recorded and retained as part of the probe's calibration record.

10.4.3 Scribe line for automated probes. A scribe line may not be necessary for an automated probe system if a reference rotational position of the probe is built into the probe system design. For such systems, a ''flat'' (or comparable, clearly identifiable physical characteristic) should be provided on the probe casing or flange plate to ensure that the reference position of the probe assembly remains in a vertical or horizontal position. The rotational offset of the flat (or comparable, clearly identifiable physical characteristic) needed to orient the reference position of the probe assembly shall be recorded and maintained as part of the automated probe system's specifications.

10.5 Yaw Angle Calibration Procedure. For each probe used to measure yaw angles with this method, a calibration procedure shall be performed in a wind tunnel meeting the specifications in section 10.1 to determine the rotational position of the reference scribe line relative to the probe's yaw-null position. This procedure shall be performed on the main probe with all devices that will be attached to the main probe in the field [such as thermocouples, resistance temperature detectors (RTDs), or sampling nozzles] that may affect the flow around the probe head. Probe shaft extensions that do not affect flow around the probe head need not be attached during calibration. At a minimum, this procedure shall include the following steps.

10.5.1 Align and lock the angle-measuring device on the reference scribe line. If a marking procedure (such as described in section 18.1.1.1) is used, align the angle-measuring device on a mark within ±1° of the rotational position of the reference scribe line. Lock the angle-measuring device onto the probe sheath at this position.

10.5.2 Zero the pressure-measuring device used for yaw nulling.

10.5.3 Insert the probe assembly into the wind tunnel through the entry port, positioning the probe's impact port at the calibration location. Check the responsiveness of the pressure-measurement device to probe rotation, taking corrective action if the response is unacceptable.

10.5.4 Ensure that the probe is in a horizontal position, using a carpenter's level.

10.5.5 Rotate the probe either clockwise or counterclockwise until a yaw null [zero ΔP for a Type S probe or zero (P_2-P_3) for a 3–D probe] is obtained. If using a Type S probe with an attached thermocouple, the direction of the probe rotation shall be such that the thermocouple is located downstream of the probe pressure ports at the yaw-null position.

10.5.6 Use the reading displayed by the angle-measuring device at the yaw-null position to determine the magnitude of the reference scribe line rotational offset, R_{SLO}, as defined in section 3.15. Annex D in section 18 of this method gives a recommended procedure for determining the magnitude of R_{SLO} with a digital inclinometer and a second procedure for determining the magnitude of R_{SLO} with a protractor wheel and pointer device. Table 2G–6 gives an example data form and Table 2G–7 is a look-up table with the recommended procedure. Procedures other than those recommended in Annex D in section 18 may be used, if they can determine R_{SLO} to within 1° and are explained in detail

in the field test report. The algebraic sign of R_{SLO} will either be positive if the rotational position of the reference scribe line (as viewed from the ''tail'' end of the probe) is clockwise, or negative, if counterclockwise with respect to the probe's yaw-null position. (This is illustrated in Figure 2G–10.)

10.5.7 The steps in sections 10.5.3 through 10.5.6 shall be performed twice at each of the velocities at which the probe will be calibrated (in accordance with section 10.6). Record the values of R_{SLO}.

10.5.8 The average of all of the R_{SLO} values shall be documented as the reference scribe line rotational offset for the probe.

10.5.9 Use of reference scribe line offset. The reference scribe line rotational offset shall be used to determine the yaw angle of flow in accordance with section 8.9.4.

10.6 Velocity Calibration Procedure. When a 3–D probe is used under this method, follow the provisions for the calibration of 3–D probes in section 10.6 of Method 2F to obtain the necessary velocity calibration coefficients (F_2 as derived using Equation 2F–2 in Method 2F) corresponding to a pitch angle position of 0°. The following procedure applies to Type S probes. This procedure shall be performed on the main probe and all devices that will be attached to the main probe in the field (e.g., thermocouples, RTDs, sampling nozzles) that may affect the flow around the probe head. Probe shaft extensions that do not affect flow around the probe head need not be attached during calibration. (Note: If a sampling nozzle is part of the assembly, two additional requirements must be satisfied before proceeding. The distance between the nozzle and the pitot tube shall meet the minimum spacing requirement prescribed in Method 2, and a wind tunnel demonstration shall be performed that shows the probe's ability to yaw null is not impaired when the nozzle is drawing sample.) To obtain velocity calibration coefficient(s) for the tested probe, proceed as follows.

10.6.1 Calibration velocities. The tester may calibrate the probe at two nominal wind tunnel velocity settings of 18.3 m/sec and 27.4 m/sec (60 ft/sec and 90 ft/sec) and average the results of these calibrations, as described in sections 10.6.12 through 10.6.14, in order to generate the calibration coefficient, C_p. If this option is selected, this calibration coefficient may be used for all field applications where the velocities are 9.1 m/sec (30 ft/sec) or greater. Alternatively, the tester may customize the probe calibration for a particular field test application (or for a series of applications), based on the expected average velocity(ies) at the test site(s). If this option is selected, generate the calibration coefficients by calibrating the probe at two nominal wind tunnel velocity settings, one of which is less than or equal to and the other greater than or equal to the expected average velocity(ies) for the field application(s), and average the results as described in sections 10.6.12 through 10.6.14. Whichever calibration option is selected, the probe calibration coefficient(s) obtained at the two nominal calibration velocities shall meet the conditions specified in sections 10.6.12 through 10.6.14.

10.6.2 Connect the tested probe and calibration pitot tube to their respective pressure-measuring devices. Zero the pressure-measuring devices. Inspect and leak-check all pitot lines; repair or replace them, if necessary. Turn on the fan, and allow the wind tunnel air flow to stabilize at the first of the selected nominal velocity settings.

10.6.3 Position the calibration pitot tube at its measurement location (determined as outlined in section 6.11.4.3), and align the tube so that its tip is pointed directly into the flow. Ensure that the entry port surrounding the tube is properly sealed. The calibration pitot tube may either remain in the wind tunnel throughout the calibration, or be removed from the wind tunnel while measurements are taken with the probe being calibrated.

10.6.4 Check the zero setting of each pressure-measuring device.

10.6.5 Insert the tested probe into the wind tunnel and align it so that the designated pressure port (e.g., either the A-side or B-side of a Type S probe) is pointed directly into the flow and is positioned within the wind tunnel calibration location (as defined in section 3.21). Secure the probe at the 0° pitch angle position. Ensure that the entry port surrounding the probe is properly sealed.

10.6.6 Read the differential pressure from the calibration pitot tube (ΔP_{std}), and record its value. Read the barometric pressure to within ±2.5 mm Hg (±0.1 in. Hg) and the temperature in the wind tunnel to within 0.6°C (1°F). Record these values on a data form similar to Table 2G–8.

10.6.7 After the tested probe's differential pressure gauges have had sufficient time to stabilize, yaw null the probe (and then rotate it back 90° for Type S probes), then obtain the differential pressure reading (ΔP). Record the yaw angle and differential pressure readings.

10.6.8 Take paired differential pressure measurements with the calibration pitot tube and tested probe (according to sections 10.6.6 and 10.6.7). The paired measurements in each replicate can be made either simultaneously (i.e., with both probes in the wind tunnel) or by alternating the measurements of the two probes (i.e., with only one probe at a time in the wind tunnel).

10.6.9 Repeat the steps in sections 10.6.6 through 10.6.8 at the same nominal velocity setting until three pairs of ΔP readings have been obtained from the calibration pitot tube and the tested probe.

10.6.10 Repeat the steps in sections 10.6.6 through 10.6.9 above for the A-side and B-side of the Type S pitot tube. For a probe assembly constructed such that its pitot tube is always used in the same orientation, only one side of the pitot tube need be calibrated (the side that will face the flow). However, the pitot tube must still meet the alignment and dimension specifications in section 6.1.1 and must have an average deviation (σ) value of 0.01 or less as provided in section 10.6.12.4.

10.6.11 Repeat the calibration procedures in sections 10.6.6 through 10.6.10 at the second selected nominal wind tunnel velocity setting.

10.6.12 Perform the following calculations separately on the A-side and B-side values.

10.6.12.1 Calculate a C_p value for each of the three replicates performed at the lower velocity setting where the calibrations were performed using Equation 2–2 in section 4.1.4 of Method 2.

10.6.12.2 Calculate the arithmetic average, $C_{p(avg\text{-}low)}$, of the three C_p values.

10.6.12.3 Calculate the deviation of each of the three individual values of C_p from the A-side average $C_{p(avg\text{-}low)}$ value using Equation 2–3 in Method 2.

10.6.12.4 Calculate the average deviation (σ) of the three individual C_p values from $C_{p(avg\text{-}low)}$ using Equation 2–4 in Method 2. Use the Type S pitot tube only if the values of σ (side A) and σ (side B) are less than or equal to 0.01. If both A-side and B-side calibration coefficients are calculated, the absolute value of the difference between $C_{p(avg\text{-}low)}$ (side A) and $C_{p(avg\text{-}low)}$ (side B) must not exceed 0.01.

10.6.13 Repeat the calculations in section 10.6.12 using the data obtained at the higher velocity setting to derive the arithmetic C_p values at the higher velocity setting, $C_{p(avg\text{-}high)}$, and to determine whether the conditions in 10.6.12.4 are met by both the A-side and B-side calibrations at this velocity setting.

10.6.14 Use equation 2G–1 to calculate the percent difference of the averaged C_p values at the two calibration velocities.

$$\%\text{Difference} = \frac{C_{p(avg\text{-}low)} - C_{p(avg\text{-}high)}}{C_{p(avg\text{-}low)}} \times 100\% \qquad \text{Eq. 2G-1}$$

The percent difference between the averaged C_p values shall not exceed ±3 percent. If the specification is met, average the A-side values of $C_{p(avg\text{-}low)}$ and $C_{p(avg\text{-}high)}$ to produce a single A-side calibration coefficient, C_p. Repeat for the B-side values if calibrations were performed on that side of the pitot. If the specification is not met, make necessary adjustments in the selected velocity settings and repeat the calibration procedure until acceptable results are obtained.

10.6.15 If the two nominal velocities used in the calibration were 18.3 and 27.4 m/sec (60 and 90 ft/sec), the average C_p from section 10.6.14 is applicable to all velocities 9.1 m/sec (30 ft/sec) or greater. If two other nominal velocities were used in the calibration, the resulting average C_p value shall be applicable only in situations where the velocity calculated using the calibration coefficient is neither less than the lower nominal velocity nor greater than the higher nominal velocity.

10.7 Recalibration. Recalibrate the probe using the procedures in section 10 either within 12 months of its first field use after its most recent calibration or after 10 field tests (as defined in section 3.3), whichever occurs later. In addition, whenever there is visible damage to the probe head, the probe shall be recalibrated before it is used again.

10.8 Calibration of pressure-measuring devices used in the field. Before its initial use in a field test, calibrate each pressure-measuring device (except those used exclusively for yaw nulling) using the three-point calibration procedure described in section 10.3.3. The device shall be recalibrated according to the procedure in section 10.3.3 no later than 90 days after its first field use following its most recent calibration. At the discretion of the tester, more frequent calibrations (e.g., after a field test) may be performed. No adjustments, other than adjustments to the zero setting, shall be made to the device between calibrations.

10.8.1 Post-test calibration check. A single-point calibration check shall be performed on each pressure-measuring device after completion of each field test. At the discretion of the tester, more frequent single-point calibration checks (e.g., after one or more field test runs) may be performed. It is recommended that the post-test check be performed before leaving the field test site. The check shall be performed at a pressure between 50 and 90 percent of full scale by taking a common pressure reading with the tested probe and a reference pressure-measuring device (as described in section 6.4.4) or by challenging the tested device with a reference pressure source (as described in section 6.4.4) or by performing an equivalent check using a reference device approved by the Administrator.

10.8.2 Acceptance criterion. At the selected pressure setting, the pressure readings made using the reference device and the tested device shall agree to within ±3 percent of full scale of the tested device or 0.8 mm H_2O (0.03 in. H_2O), whichever is less restrictive. If this specification is met, the test data collected during the field test are valid. If the specification is not met, all test data collected since the last successful calibration or calibration check are invalid and shall be repeated using a pressure-measuring device with a current, valid calibration. Any device that fails the calibration check shall not be used in a field test until a successful recalibration is performed according to the procedures in section 10.3.3.

10.9 Temperature Gauges. Same as Method 2, section 4.3. The alternative thermocouple calibration procedures outlined in Emission Measurement Center (EMC) Approved Alternative Method (ALT–011) ''Alternative Method 2 Thermocouple Calibration Procedure'' may be performed. Temperature gauges shall be calibrated no more than 30 days prior to the start of a field test or series of field tests and recalibrated no more than 30 days after completion of a field test or series of field tests.

10.10 Barometer. Same as Method 2, section 4.4. The barometer shall be calibrated no more than 30 days prior to the start of a field test or series of field tests.

11.0 Analytical Procedure

Sample collection and analysis are concurrent for this method (see section 8.0).

12.0 Data Analysis and Calculations

These calculations use the measured yaw angle and the differential pressure and temperature measurements at individual traverse points to derive the near-axial flue gas velocity ($v_{a(i)}$) at each of those points. The near-axial velocity values at all traverse points that comprise a full stack or duct traverse are then averaged to obtain the average near-axial stack or duct gas velocity ($v_{a(avg)}$).

12.1 Nomenclature

A=Cross-sectional area of stack or duct at the test port location, m^2 (ft^2).

B_{ws}=Water vapor in the gas stream (from Method 4 or alternative), proportion by volume.

C_p=Pitot tube calibration coefficient, dimensionless.

$F_{2(i)}$=3-D probe velocity coefficient at 0 pitch, applicable at traverse point i.

K_p=Pitot tube constant,

$$34.97\frac{\text{m}}{\text{sec}}\left[\frac{(\text{g/g-mole})(\text{mm Hg})}{(^\circ\text{K})(\text{mm H}_2\text{O})}\right]^{1/2}$$

for the metric system, and

$$85.49\frac{\text{ft}}{\text{sec}}\left[\frac{(\text{lb/lb-mole})(\text{in. Hg})}{(^\circ\text{R})(\text{in. H}_2\text{O})}\right]^{1/2}$$

for the English system.

M_d=Molecular weight of stack or duct gas, dry basis (see section 8.13), g/g-mole (lb/lb-mole).

M_s=Molecular weight of stack or duct gas, wet basis, g/g-mole (lb/lb-mole).

$$M_s = M_d\left(1 - B_{ws}\right) + 18.0B_{ws} \quad \text{Eq. 2G-2}$$

P_{bar}=Barometric pressure at velocity measurement site, mm Hg (in. Hg).

P_g=Stack or duct static pressure, mm H_2O (in. H_2O).

P_s=Absolute stack or duct pressure, mm Hg (in. Hg),

$$P_s = P_{bar} + \frac{P_g}{13.6} \quad \text{Eq. 2G-3}$$

P_{std}=Standard absolute pressure, 760 mm Hg (29.92 in. Hg).

13.6=Conversion from mm H_2O (in. H_2O) to mm Hg (in. Hg).

Q_{sd}=Average dry-basis volumetric stack or duct gas flow rate corrected to standard conditions, dscm/hr (dscf/hr).

Q_{sw}=Average wet-basis volumetric stack or duct gas flow rate corrected to standard conditions, wscm/hr (wscf/hr).

$t_{s(i)}$=Stack or duct temperature, °C (°F), at traverse point i.

$T_{s(i)}$=Absolute stack or duct temperature, °K (°R), at traverse point i.

$$T_{s(i)} = 273 + t_{s(i)} \quad \text{Eq. 2G-4}$$

for the metric system, and

$$T_{s(i)} = 460 + t_{s(i)} \quad \text{Eq. 2G-5}$$

for the English system.

$T_{s(avg)}$=Average absolute stack or duct gas temperature across all traverse points.

T_{std}=Standard absolute temperature, 293°K (528°R).

$v_{a(i)}$=Measured stack or duct gas impact velocity, m/sec (ft/sec), at traverse point i.

$v_{a(avg)}$=Average near-axial stack or duct gas velocity, m/sec (ft/sec) across all traverse points.

ΔP_i=Velocity head (differential pressure) of stack or duct gas, mm H_2O (in. H_2O), applicable at traverse point i.

(P_1-P_2)=Velocity head (differential pressure) of stack or duct gas measured by a 3-D probe, mm H_2O (in. H_2O), applicable at traverse point i.

3,600=Conversion factor, sec/hr.

18.0=Molecular weight of water, g/g-mole (lb/lb-mole).

$\theta_{y(i)}$=Yaw angle of the flow velocity vector, at traverse point i.
n=Number of traverse points.

12.2 Traverse Point Velocity Calculations. Perform the following calculations from the measurements obtained at each traverse point.

12.2.1 Selection of calibration coefficient. Select the calibration coefficient as described in section 10.6.1.

12.2.2 Near-axial traverse point velocity. When using a Type S probe, use the following equation to calculate the traverse point near-axial velocity ($v_{a(i)}$) from the differential pressure (ΔP_i), yaw angle ($\theta_{y(i)}$), absolute stack or duct standard temperature ($T_{s(i)}$) measured at traverse point i, the absolute stack or duct pressure (P_s), and molecular weight (M_s).

$$v_{a(i)} = K_p C_p \sqrt{\frac{(\Delta P)_i T_{s(i)}}{P_s M_s}} \left(\cos\theta_{y(i)}\right) \qquad \text{Eq. 2G-6}$$

Use the following equation when using a 3–D probe.

$$v_{a(i)} = K_p F_2 \sqrt{\frac{(P_1 - P_2)_i T_{s(i)}}{P_s M_s}} \left(\cos\theta_{y(i)}\right) \qquad \text{Eq. 2G-7}$$

12.2.3 Handling multiple measurements at a traverse point. For pressure or temperature devices that take multiple measurements at a traverse point, the multiple measurements (or where applicable, their square roots) may first be averaged and the resulting average values used in the equations above. Alternatively, the individual measurements may be used in the equations above and the resulting calculated values may then be averaged to obtain a single traverse point value. With either approach, all of the individual measurements recorded at a traverse point must be used in calculating the applicable traverse point value.

12.3 Average Near-Axial Velocity in Stack or Duct. Use the reported traverse point near-axial velocity in the following equation.

$$v_{a(avg)} = \frac{\sum_{i=1}^{n} v_{a(i)}}{n} \qquad \text{Eq. 2G-8}$$

12.4 Acceptability of Results. The acceptability provisions in section 12.4 of Method 2F apply to 3-D probes used under Method 2G. The following provisions apply to Type S probes. For Type S probes, the test results are acceptable and the calculated value of $v_{a(avg)}$ may be reported as the average near-axial velocity for the test run if the conditions in either section 12.4.1 or 12.4.2 are met.

12.4.1 The average calibration coefficient C_p used in Equation 2G–6 was generated at nominal velocities of 18.3 and 27.4 m/sec (60 and 90 ft/sec) and the value of $v_{a(avg)}$ calculated using Equation 2G–8 is greater than or equal to 9.1 m/sec (30 ft/sec).

12.4.2 The average calibration coefficient C_p used in Equation 2G–6 was generated at nominal velocities other than 18.3 or 27.4 m/sec (60 or 90 ft/sec) and the value of $v_{a(avg)}$ calculated using Equation 2G–8 is greater than or equal to the lower nominal velocity and less than or equal to the higher nominal velocity used to derive the average C_p.

12.4.3 If the conditions in neither section 12.4.1 nor section 12.4.2 are met, the test results obtained from Equation 2G–8 are not acceptable, and the steps in sections 12.2 and 12.3 must be repeated using an average calibration coefficient C_p that satisfies the conditions in section 12.4.1 or 12.4.2.

12.5 Average Gas Volumetric Flow Rate in Stack or Duct (Wet Basis). Use the following equation to compute the average volumetric flow rate on a wet basis.

$$Q_{sw} = 3{,}600\left(v_{a(avg)}\right)(A)\left(\frac{T_{std}}{T_{s(avg)}}\right)\left(\frac{P_s}{P_{std}}\right) \qquad \text{Eq. 2G-9}$$

12.6 Average Gas Volumetric Flow Rate in Stack or Duct (Dry Basis). Use the following equation to compute the average volumetric flow rate on a dry basis.

$$Q_{sd} = 3{,}600\left(1 - B_{ws}\right)\left(v_{a(avg)}\right)(A)\left(\frac{T_{std}}{T_{s(avg)}}\right)\left(\frac{P_s}{P_{std}}\right) \qquad \text{Eq. 2G-10}$$

13.0 Method Performance [Reserved]

14.0 Pollution Prevention [Reserved]

15.0 Waste Management [Reserved]

16.0 Reporting.

16.1 Field Test Reports. Field test reports shall be submitted to the Agency according to applicable regulatory requirements. Field test reports should, at a minimum, include the following elements.

16.1.1 Description of the source. This should include the name and location of the test site, descriptions of the process tested, a description of the combustion source, an accurate diagram of stack or duct cross-sectional area at the test site showing the dimensions of the stack or duct, the location of the test ports, and traverse point locations and identification numbers or codes. It should also include a description and diagram of the stack or duct layout, showing the distance of the test location from the nearest upstream and downstream disturbances and all structural elements (including breachings, baffles, fans, straighteners, etc.) affecting the flow pattern. If the source and test location descriptions have been previously submitted to the Agency in a document (e.g., a monitoring plan or test plan), referencing the document in lieu of including this information in the field test report is acceptable.

16.1.2 Field test procedures. These should include a description of test equipment and test procedures. Testing conventions, such as traverse point numbering and measurement sequence (e.g., sampling from center to wall, or wall to center), should be clearly stated. Test port identification and directional reference for each test port should be included on the appropriate field test data sheets.

16.1.3 Field test data.

16.1.3.1 Summary of results. This summary should include the dates and times of testing, and the average near-axial gas velocity and the average flue gas volumetric flow results for each run and tested condition.

16.1.3.2 Test data. The following values for each traverse point should be recorded and reported:

(a) Differential pressure at traverse point i (ΔP_i)

(b) Stack or duct temperature at traverse point i ($t_{s(i)}$)

(c) Absolute stack or duct temperature at traverse point i ($T_{s(i)}$)

(d) Yaw angle at traverse point i ($\theta_{y(i)}$)

(e) Stack gas near-axial velocity at traverse point i ($v_{a(i)}$)

16.1.3.3 The following values should be reported once per run:

(a) Water vapor in the gas stream (from Method 4 or alternative), proportion by volume (B_{ws}), measured at the frequency specified in the applicable regulation

(b) Molecular weight of stack or duct gas, dry basis (M_d)

(c) Molecular weight of stack or duct gas, wet basis (M_s)

(d) Stack or duct static pressure (P_g)

(e) Absolute stack or duct pressure (P_s)

(f) Carbon dioxide concentration in the flue gas, dry basis ($\%_d$ CO_2)

(g) Oxygen concentration in the flue gas, dry basis ($\%_d$ O_2)

(h) Average near-axial stack or duct gas velocity ($v_{a(avg)}$) across all traverse points

(i) Gas volumetric flow rate corrected to standard conditions, dry or wet basis as required by the applicable regulation (Q_{sd} or Q_{sw})

16.1.3.4 The following should be reported once per complete set of test runs:

(a) Cross-sectional area of stack or duct at the test location (A)

(b) Pitot tube calibration coefficient (C_P)

(c) Measurement system response time (sec)

(d) Barometric pressure at measurement site (P_{bar})

16.1.4 Calibration data. The field test report should include calibration data for all

probes and test equipment used in the field test. At a minimum, the probe calibration data reported to the Agency should include the following:

(a) Date of calibration

(b) Probe type

(c) Probe identification number(s) or code(s)

(d) Probe inspection sheets

(e) Pressure measurements and calculations used to obtain calibration coefficients in accordance with section 10.6 of this method

(f) Description and diagram of wind tunnel used for the calibration, including dimensions of cross-sectional area and position and size of the test section

(g) Documentation of wind tunnel qualification tests performed in accordance with section 10.1 of this method

16.1.5 Quality assurance. Specific quality assurance and quality control procedures used during the test should be described.

17.0 Bibliography.

(1) 40 CFR Part 60, Appendix A, Method 1—Sample and velocity traverses for stationary sources.

(2) 40 CFR Part 60, Appendix A, Method 2—Determination of stack gas velocity and volumetric flow rate (Type S pitot tube) .

(3) 40 CFR Part 60, Appendix A, Method 2F—Determination of stack gas velocity and volumetric flow rate with three-dimensional probes.

(4) 40 CFR Part 60, Appendix A, Method 2H—Determination of stack gas velocity taking into account velocity decay near the stack wall.

(5) 40 CFR Part 60, Appendix A, Method 3—Gas analysis for carbon dioxide, oxygen, excess air, and dry molecular weight.

(6) 40 CFR Part 60, Appendix A, Method 3A—Determination of oxygen and carbon dioxide concentrations in emissions from stationary sources (instrumental analyzer procedure).

(7) 40 CFR Part 60, Appendix A, Method 4—Determination of moisture content in stack gases.

(8) Emission Measurement Center (EMC) Approved Alternative Method (ALT–011) ''Alternative Method 2 Thermocouple Calibration Procedure.''

(9) Electric Power Research Institute, Interim Report EPRI TR–106698, ''Flue Gas Flow Rate Measurement Errors,'' June 1996.

(10) Electric Power Research Institute, Final Report EPRI TR–108110, ''Evaluation of Heat Rate Discrepancy from Continuous Emission Monitoring Systems,'' August 1997.

(11) Fossil Energy Research Corporation, Final Report, ''Velocity Probe Tests in Non-axial Flow Fields,'' November 1998, Prepared for the U.S. Environmental Protection Agency.

(12) Fossil Energy Research Corporation, ''Additional Swirl Tunnel Tests: E-DAT and T-DAT Probes,'' February 24, 1999, Technical Memorandum Prepared for U.S. Environmental Protection Agency, P.O. No. 7W–1193–NALX.

(13) Massachusetts Institute of Technology, Report WBWT-TR–1317, ''Calibration of Eight Wind Speed Probes Over a Reynolds Number Range of 46,000 to 725,000 Per Foot, Text and Summary Plots,'' Plus appendices, October 15, 1998, Prepared for The Cadmus Group, Inc.

(14) National Institute of Standards and Technology, Special Publication 250, ''NIST Calibration Services Users Guide 1991,'' Revised October 1991, U.S. Department of Commerce, p. 2.

(15) National Institute of Standards and Technology, 1998, ''Report of Special Test of Air Speed Instrumentation, Four Prandtl Probes, Four S-Type Probes, Four French Probes, Four Modified Kiel Probes,'' Prepared for the U.S. Environmental Protection Agency under IAG #DW13938432–01–0.

(16) National Institute of Standards and Technology, 1998, ''Report of Special Test of Air Speed In-strumentation, Five Autoprobes,'' Prepared for the U.S. Environmental Protection Agency under IAG #DW13938432–01–0.

(17) National Institute of Standards and Technology, 1998, ''Report of Special Test of Air Speed Instrumentation, Eight Spherical Probes,'' Prepared for the U.S. Environmental Protection Agency under IAG #DW13938432–01–0.

(18) National Institute of Standards and Technology, 1998, ''Report of Special Test of Air Speed Instrumentation, Four DAT Probes, '' Prepared for the U.S. Environmental Protection Agency under IAG #DW13938432–01–0.

(19) Norfleet, S.K., ''An Evaluation of Wall Effects on Stack Flow Velocities and Related Overestimation Bias in EPA's Stack Flow Reference Methods,'' EPRI CEMS User's Group Meeting, New Orleans, Louisiana, May 13–15, 1998.

(20) Page, J.J., E.A. Potts, and R.T. Shigehara, ''3–D Pitot Tube Calibration Study,'' EPA Contract No. 68D10009, Work Assignment No. I–121, March 11, 1993.

(21) Shigehara, R.T., W.F. Todd, and W.S. Smith, ''Significance of Errors in Stack Sampling Measurements,'' Presented at the Annual Meeting of the Air Pollution Control Association, St. Louis, Missouri, June 1419, 1970.

(22) The Cadmus Group, Inc., May 1999, ''EPA Flow Reference Method Testing and Analysis: Findings Report,'' EPA/430–R–99–009.

(23) The Cadmus Group, Inc., 1998, ''EPA Flow Reference Method Testing and Analysis: Data Report, Texas Utilities, DeCordova Steam Electric Station, Volume

I: Test Description and Appendix A (Data Distribution Package),'' EPA/430–R–98–015a.

(24) The Cadmus Group, Inc., 1998, ''EPA Flow Reference Method Testing and Analysis: Data Report, Texas Utilities, Lake Hubbard Steam Electric Station, Volume I: Test Description and Appendix A (Data Distribution Package),'' EPA/430–R–98–017a.

(25) The Cadmus Group, Inc., 1998, ''EPA Flow Reference Method Testing and Analysis: Data Report, Pennsylvania Electric Co., G.P.U. Genco Homer City Station: Unit 1, Volume I: Test Description and Appendix A (Data Distribution Package),'' EPA/430–R–98–018a.

(26) The Cadmus Group, Inc., 1997, ''EPA Flow Reference Method Testing and Analysis: Wind Tunnel Experimental Results,'' EPA/430–R–97–013.

18.0 Annexes

Annex A, C, and D describe recommended procedures for meeting certain provisions in sections 8.3, 10.4, and 10.5 of this method. Annex B describes procedures to be followed when using the protractor wheel and pointer assembly to measure yaw angles, as provided under section 8.9.1.

18.1 Annex A—Rotational Position Check. The following are recommended procedures that may be used to satisfy the rotational position check requirements of section 8.3 of this method and to determine the angle-measuring device rotational offset (R_{ADO}).

18.1.1 Rotational position check with probe outside stack. Where physical constraints at the sampling location allow full assembly of the probe outside the stack and insertion into the test port, the following procedures should be performed before the start of testing. Two angle-measuring devices that meet the specifications in section 6.2.1 or 6.2.3 are required for the rotational position check. An angle measuring device whose position can be independently adjusted (e.g., by means of a set screw) after being locked into position on the probe sheath shall not be used for this check unless the independent adjustment is set so that the device performs exactly like a device without the capability for independent adjustment. That is, when aligned on the probe such a device must give the same reading as a device that does not have the capability of being independently adjusted. With the fully assembled probe (including probe shaft extensions, if any) secured in a horizontal position, affix one yaw angle-measuring device to the probe sheath and lock it into position on the reference scribe line specified in section 6.1.5.1. Position the second angle-measuring device using the procedure in section 18.1.1.1 or 18.1.1.2.

18.1.1.1 Marking procedure. The procedures in this section should be performed at each location on the fully assembled probe where the yaw angle-measuring device will be mounted during the velocity traverse. Place the second yaw angle-measuring device on the main probe sheath (or extension) at the position where a yaw angle will be measured during the velocity traverse. Adjust the position of the second angle-measuring device until it indicates the same angle (±1°) as the reference device, and affix the second device to the probe sheath (or extension). Record the angles indicated by the two angle-measuring devices on a form similar to table 2G–2. In this position, the second angle-measuring device is considered to be properly positioned for yaw angle measurement. Make a mark, no wider than 1.6 mm (1/16 in.), on the probe sheath (or extension), such that the yaw angle-measuring device can be re-affixed at this same properly aligned position during the velocity traverse.

18.1.1.2 Procedure for probe extensions with scribe lines. If, during a velocity traverse the angle-measuring device will be affixed to a probe extension having a scribe line as specified in section 6.1.5.2, the following procedure may be used to align the extension's scribe line with the reference scribe line instead of marking the extension as described in section 18.1.1.1. Attach the probe extension to the main probe. Align and lock the second angle-measuring device on the probe extension's scribe line. Then, rotate the extension until both measuring devices indicate the same angle (±1°). Lock the extension at this rotational position. Record the angles indicated by the two angle-measuring devices on a form similar to table 2G–2. An angle-measuring device may be aligned at any position on this scribe line during the velocity traverse, if the scribe line meets the alignment specification in section 6.1.5.3.

18.1.1.3 Post-test rotational position check. If the fully assembled probe includes one or more extensions, the following check should be performed immediately after the completion of a velocity traverse. At the discretion of the tester, additional checks may be conducted after completion of testing at any sample port. Without altering the alignment of any of the components of the probe assembly used in the velocity traverse, secure the fully assembled probe in a horizontal position. Affix an angle-measuring device at the reference scribe line specified in section 6.1.5.1. Use the other angle-measuring device to check the angle at each location where the device was checked prior to testing. Record the readings from the two angle-measuring devices.

18.1.2 Rotational position check with probe in stack. This section applies only to probes that, due to physical constraints, cannot be inserted into the test port as fully assembled with all necessary extensions needed to reach the inner-most traverse point(s).

18.1.2.1 Perform the out-of-stack procedure in section 18.1.1 on the main probe and

any attached extensions that will be initially inserted into the test port.

18.1.2.2 Use the following procedures to perform additional rotational position check(s) with the probe in the stack, each time a probe extension is added. Two angle-measuring devices are required. The first of these is the device that was used to measure yaw angles at the preceding traverse point, left in its properly aligned measurement position. The second angle-measuring device is positioned on the added probe extension. Use the applicable procedures in section 18.1.1.1 or 18.1.1.2 to align, adjust, lock, and mark (if necessary) the position of the second angle-measuring device to within ±1° of the first device. Record the readings of the two devices on a form similar to Table 2G–2.

18.1.2.3 The procedure in section 18.1.2.2 should be performed at the first port where measurements are taken. The procedure should be repeated each time a probe extension is re-attached at a subsequent port, unless the probe extensions are designed to be locked into a mechanically fixed rotational position (e.g., through use of interlocking grooves), which can be reproduced from port to port as specified in section 8.3.5.2.

18.2 Annex B—Angle Measurement Protocol for Protractor Wheel and Pointer Device. The following procedure shall be used when a protractor wheel and pointer assembly, such as the one described in section 6.2.2 and illustrated in Figure 2G–5 is used to measure the yaw angle of flow. With each move to a new traverse point, unlock, re-align, and re-lock the probe, angle-pointer collar, and protractor wheel to each other. At each such move, particular attention is required to ensure that the scribe line on the angle pointer collar is either aligned with the reference scribe line on the main probe sheath or is at the rotational offset position established under section 8.3.1. The procedure consists of the following steps:

18.2.1 Affix a protractor wheel to the entry port for the test probe in the stack or duct.

18.2.2 Orient the protractor wheel so that the 0° mark corresponds to the longitudinal axis of the stack or duct. For stacks, vertical ducts, or ports on the side of horizontal ducts, use a digital inclinometer meeting the specifications in section 6.2.1 to locate the 0° orientation. For ports on the top or bottom of horizontal ducts, identify the longitudinal axis at each test port and permanently mark the duct to indicate the 0° orientation. Once the protractor wheel is properly aligned, lock it into position on the test port.

18.2.3 Move the pointer assembly along the probe sheath to the position needed to take measurements at the first traverse point. Align the scribe line on the pointer collar with the reference scribe line or at the rotational offset position established under section 8.3.1. Maintaining this rotational alignment, lock the pointer device onto the probe sheath. Insert the probe into the entry port to the depth needed to take measurements at the first traverse point.

18.2.4 Perform the yaw angle determination as specified in sections 8.9.3 and 8.9.4 and record the angle as shown by the pointer on the protractor wheel. Then, take velocity pressure and temperature measurements in accordance with the procedure in section 8.9.5. Perform the alignment check described in section 8.9.6.

18.2.5 After taking velocity pressure measurements at that traverse point, unlock the probe from the collar and slide the probe through the collar to the depth needed to reach the next traverse point.

18.2.6 Align the scribe line on the pointer collar with the reference scribe line on the main probe or at the rotational offset position established under section 8.3.1. Lock the collar onto the probe.

18.2.7 Repeat the steps in sections 18.2.4 through 18.2.6 at the remaining traverse points accessed from the current stack or duct entry port.

18.2.8 After completing the measurement at the last traverse point accessed from a port, verify that the orientation of the protractor wheel on the test port has not changed over the course of the traverse at that port. For stacks, vertical ducts, or ports on the side of horizontal ducts, use a digital inclinometer meeting the specifications in section 6.2.1 to check the rotational position of the 0° mark on the protractor wheel. For ports on the top or bottom of horizontal ducts, observe the alignment of the angle wheel 0° mark relative to the permanent 0° mark on the duct at that test port. If these observed comparisons exceed ±2° of 0°, all angle and pressure measurements taken at that port since the protractor wheel was last locked into position on the port shall be repeated.

18.2.9 Move to the next stack or duct entry port and repeat the steps in sections 18.2.1 through 18.2.8.

18.3 Annex C—Guideline for Reference Scribe Line Placement. Use of the following guideline is recommended to satisfy the requirements of section 10.4 of this method. The rotational position of the reference scribe line should be either 90° or 180° from the probe's impact pressure port. For Type-S probes, place separate scribe lines, on opposite sides of the probe sheath, if both the A and B sides of the pitot tube are to be used for yaw angle measurements.

18.4 Annex D—Determination of Reference Scribe Line Rotational Offset. The following procedures are recommended for determining the magnitude and sign of a probe's reference scribe line rotational offset, R_{SLO}. Separate procedures are provided for two types of angle-measuring devices:

digital inclinometers and protractor wheel and pointer assemblies.

18.4.1 Perform the following procedures on the main probe with all devices that will be attached to the main probe in the field [such as thermocouples, resistance temperature detectors (RTDs), or sampling nozzles] that may affect the flow around the probe head. Probe shaft extensions that do not affect flow around the probe head need not be attached during calibration.

18.4.2 The procedures below assume that the wind tunnel duct used for probe calibration is horizontal and that the flow in the calibration wind tunnel is axial as determined by the axial flow verification check described in section 10.1.2. Angle-measuring devices are assumed to display angles in alternating 0° to 90° and 90° to 0° intervals. If angle-measuring devices with other readout conventions are used or if other calibration wind tunnel duct configurations are used, make the appropriate calculational corrections. For Type-S probes, calibrate the A-side and B-sides separately, using the appropriate scribe line (see section 18.3, above), if both the A and B sides of the pitot tube are to be used for yaw angle determinations.

18.4.2.1 Position the angle-measuring device in accordance with one of the following procedures.

18.4.2.1.1 If using a digital inclinometer, affix the calibrated digital inclinometer to the probe. If the digital inclinometer can be independently adjusted after being locked into position on the probe sheath (e.g., by means of a set screw), the independent adjustment must be set so that the device performs exactly like a device without the capability for independent adjustment. That is, when aligned on the probe the device must give the same readings as a device that does not have the capability of being independently adjusted. Either align it directly on the reference scribe line or on a mark aligned with the scribe line determined according to the procedures in section 18.1.1.1. Maintaining this rotational alignment, lock the digital inclinometer onto the probe sheath.

18.4.2.1.2 If using a protractor wheel and pointer device, orient the protractor wheel on the test port so that the 0° mark is aligned with the longitudinal axis of the wind tunnel duct. Maintaining this alignment, lock the wheel into place on the wind tunnel test port. Align the scribe line on the pointer collar with the reference scribe line or with a mark aligned with the reference scribe line, as determined under section 18.1.1.1. Maintaining this rotational alignment, lock the pointer device onto the probe sheath.

18.4.2.2 Zero the pressure-measuring device used for yaw nulling.

18.4.2.3 Insert the probe assembly into the wind tunnel through the entry port, positioning the probe's impact port at the calibration location. Check the responsiveness of the pressure-measuring device to probe rotation, taking corrective action if the response is unacceptable.

18.4.2.4 Ensure that the probe is in a horizontal position using a carpenter's level.

18.4.2.5 Rotate the probe either clockwise or counterclockwise until a yaw null [zero ΔP for a Type S probe or zero (P_2–P_3) for a 3–D probe] is obtained. If using a Type S probe with an attached thermocouple, the direction of the probe rotation shall be such that the thermocouple is located downstream of the probe pressure ports at the yaw-null position.

18.4.2.6 Read and record the value of θ_{null}, the angle indicated by the angle-measuring device at the yaw-null position. Record the angle reading on a form similar to Table 2G–6. Do not associate an algebraic sign with this reading.

18.4.2.7 Determine the magnitude and algebraic sign of the reference scribe line rotational offset, R_{SLO}. The magnitude of R_{SLO} will be equal to either θ_{null} or $(90° - \theta_{null})$, depending on the type of probe being calibrated and the type of angle-measuring device used. (See Table 2G–7 for a summary.) The algebraic sign of R_{SLO} will either be positive if the rotational position of the reference scribe line is clockwise or negative if counterclockwise with respect to the probe's yaw-null position. Figure 2G–10 illustrates how the magnitude and sign of R_{SLO} are determined.

18.4.2.8 Perform the steps in sections 18.3.2.3 through 18.3.2.7 twice at each of the two calibration velocities selected for the probe under section 10.6. Record the values of R_{SLO} in a form similar to Table 2G–6.

18.4.2.9 The average of all R_{SLO} values is the reference scribe line rotational offset for the probe.

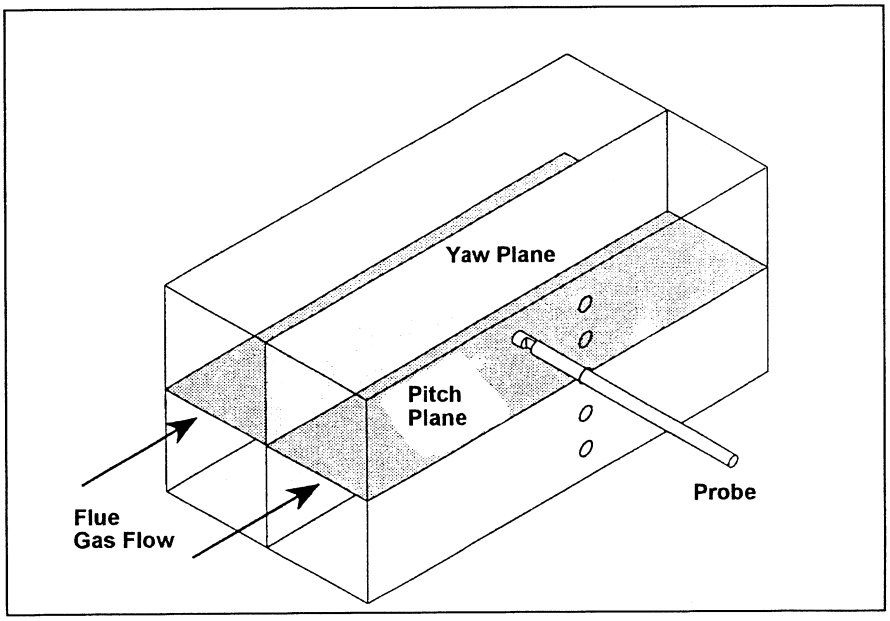

Figure 2G-1. Illustration of yaw and pitch planes in stack or duct.

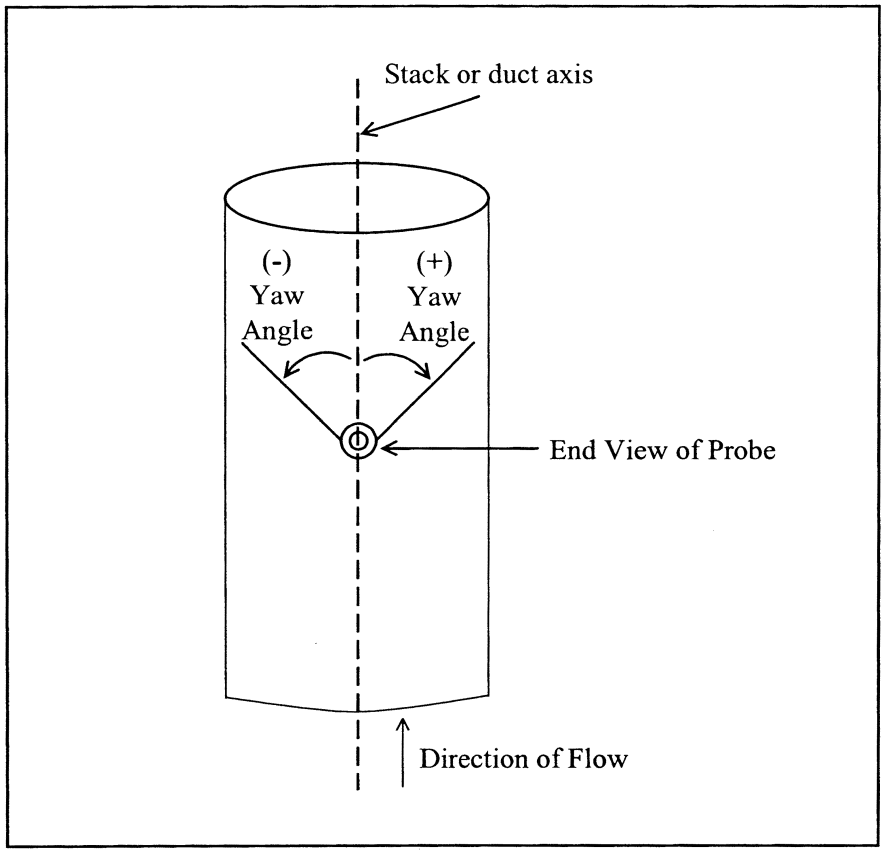

Figure 2G-2. Illustration of probe rotation representing positive and negative yaw angles.

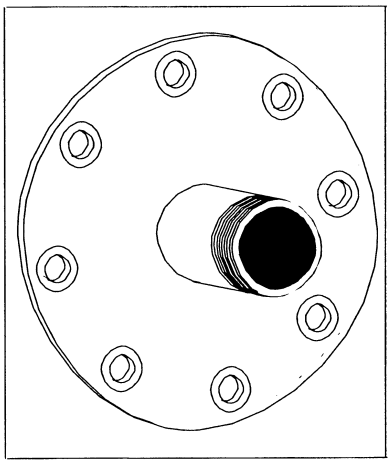

Figure 2G-3. Example bushing sleeve.

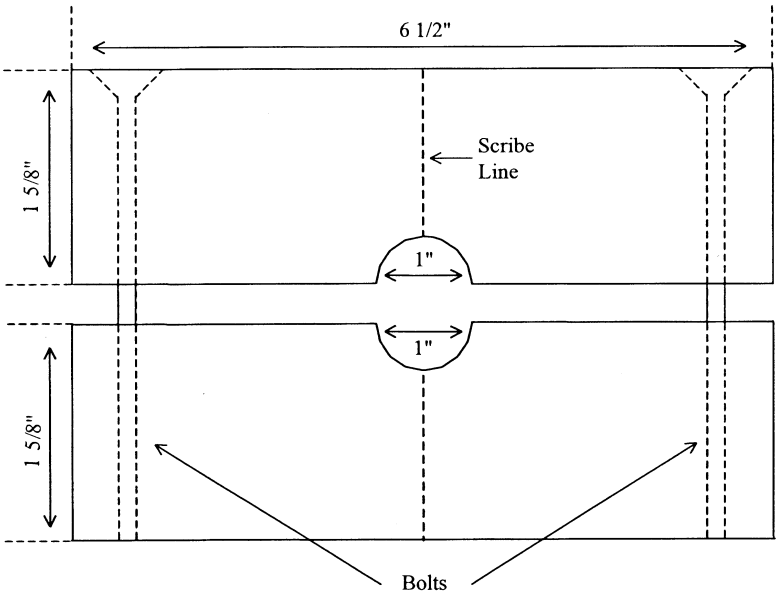

Figure 2G-4. Rotational position collar block.

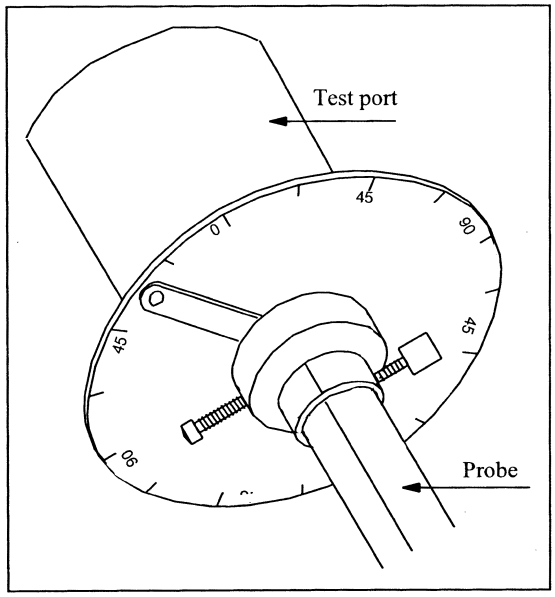

Figure 2G-5. Yaw angle protractor wheel and pointer.

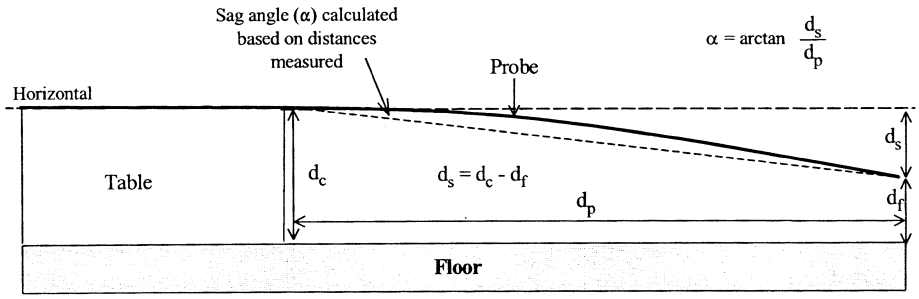

Figure 2G-6. Elements in horizontal straightness test based on trigonometry.

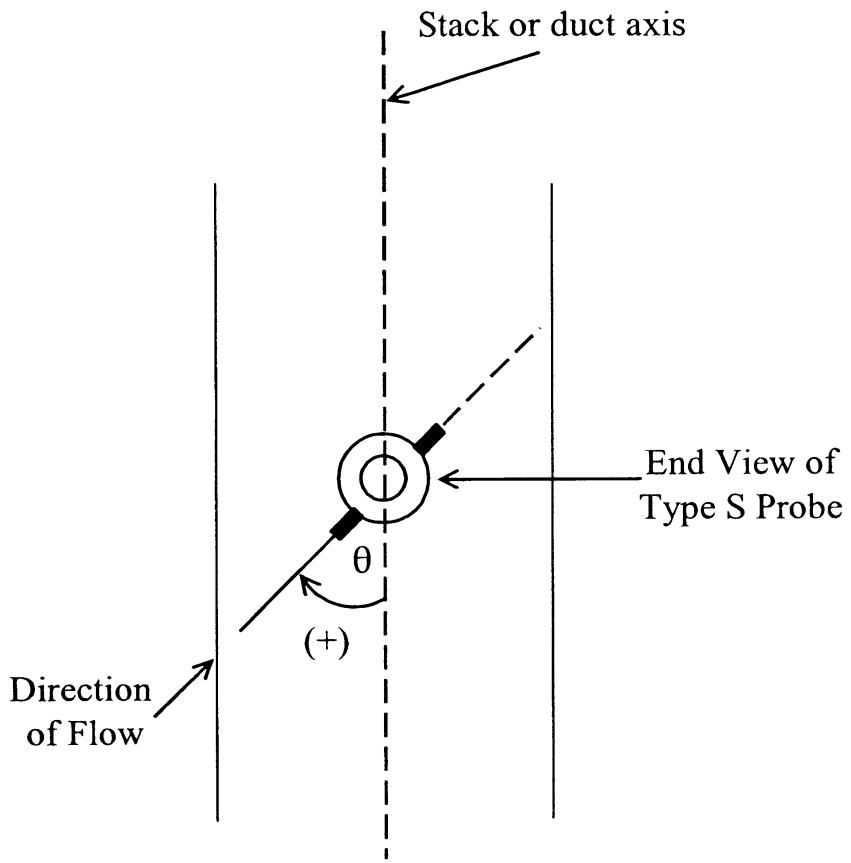

Figure 2G-7. Sign convention for the measured angle (θ) when the probe impact port is pointed directly into the flow. The angle θ is positive when the probe's impact pressure port is oriented in a clockwise rotational position relative to the stack or duct axis, as shown above, and negative for a counter-clockwise orientation.

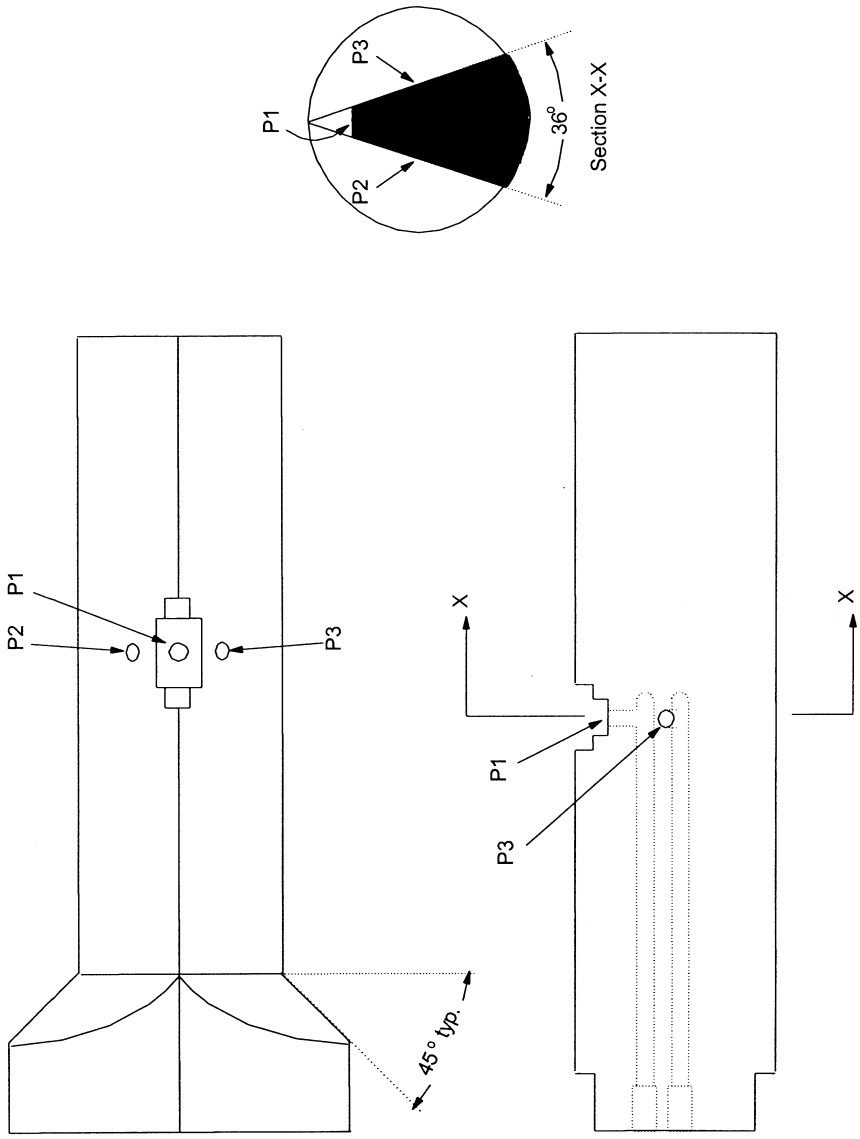

Figure 2G-8. Wedge probe used for axial flow verification.

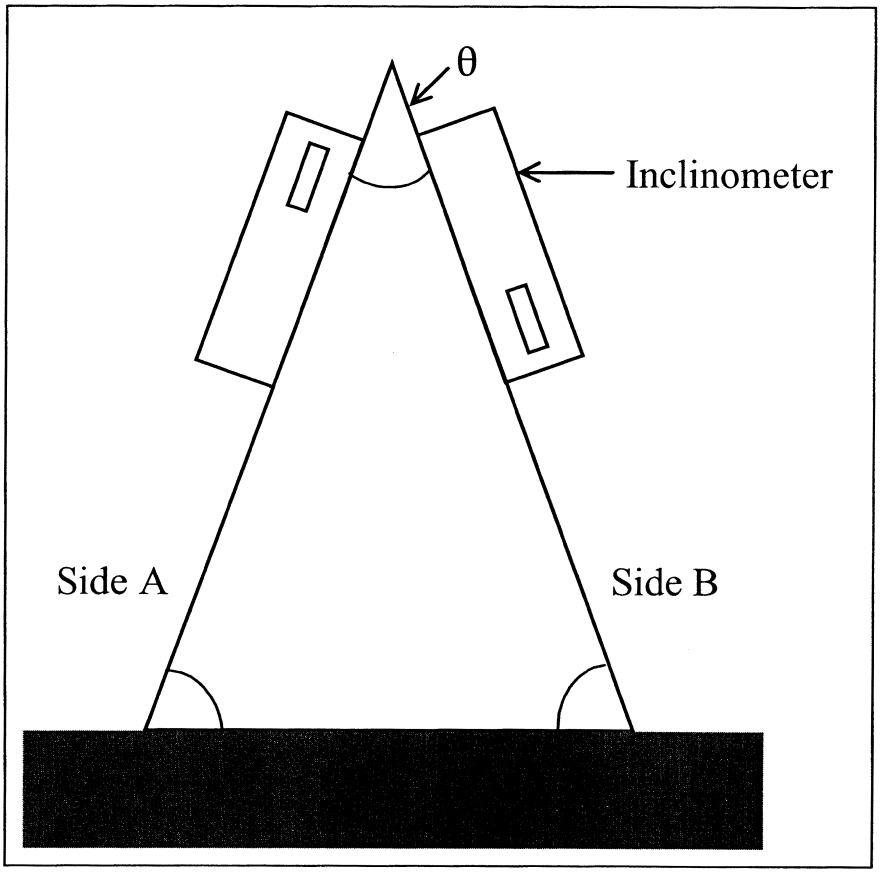

Figure 2G-9. Triangular block used for digital inclinometer calibration.

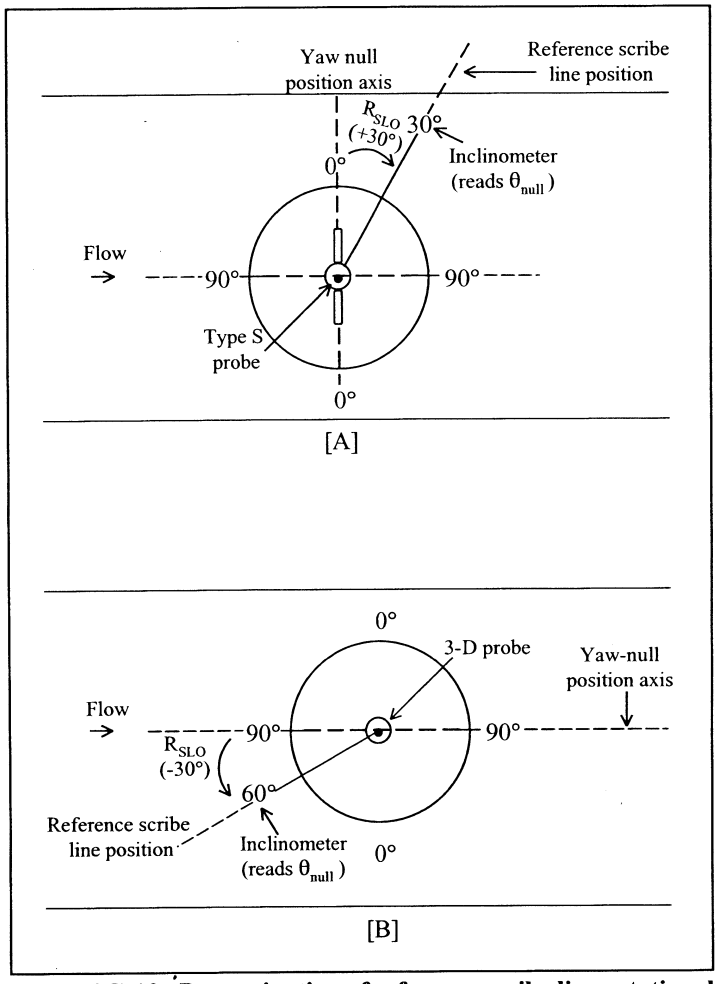

Figure 2G-10. Determination of reference scribe line rotational offset (R_{SLO}) in a horizontal wind tunnel with axial flow for: [A], a Type S probe, and [B], a 3-D probe. In [A] and [B], the probe impact pressure port is aligned with the yaw-null position axis and the inclinometer reads θ_{null}. In [A], the magnitude of R_{SLO} = θ_{null} and the sign is positive (clockwise from yaw-null position axis). In [B], the magnitude of R_{SLO} = 90°-θ_{null} and the sign is negative (counterclockwise from yaw-null position axis).

Table 2G-1. Type S Probe Inspection Sheet

Note: Method 2 provides the criteria for an acceptably constructed Type S pitot tube. However, the procedure for making the necessary measurements is not specified. One approach is given below.

1. Use a vise with parallel and perpendicular faces. Use an angle-measuring device (analog or digital) for this check.
2. Place the pitot tube in the vise, and level the pitot tube horizontally using the angle-measuring device.
3. Place the angle-measuring device as shown below.
4. Measure distance A, which is P_A plus P_B. Method 2 specifies that $P_A = P_B$, but provides no tolerance for this measurement. Because this measurement is very difficult, it is suggested that $P_A = P_B = A/2$.
5. Measure the external tube diameter (D_t) with a micrometer, machinist's rule, or internal caliper.
6. Record all data as shown on the form below.
7. Calculate dimensions w and z as shown below.

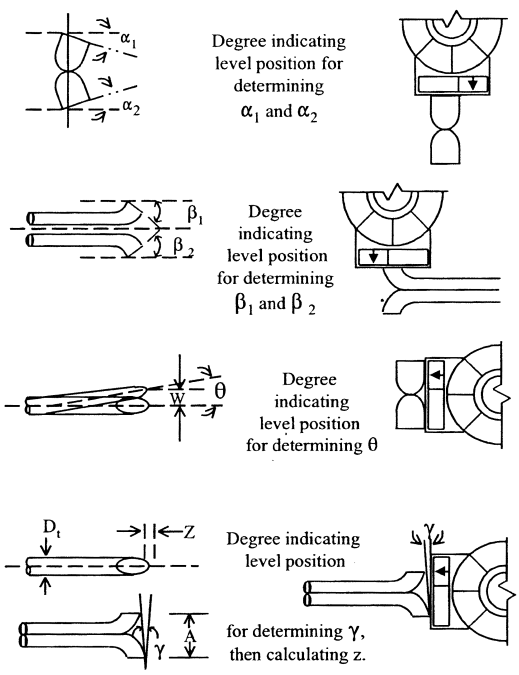

Level and perpendicular?	
Obstruction?	
Damaged?	
α_1 ($-2° \le \alpha_1 \le +2°$)	
α_2 ($-2° \le \alpha_2 \le +2°$)	
β_1 ($-2° \le \beta_1 \le +2°$)	
β_2 ($-2° \le \beta_2 \le +2°$)	
γ	
θ	
$z = A (\tan\gamma)$ [$\le$ 0.5 mm (0.02 in.)]	
$w = A (\tan\theta)$ [$\le$ 0.5 mm (0.02 in.)]	
D_t [$\ge$ 9.5 mm (3/8 in.)]	
A	
$A/2D_t$ ($1.05 \le P_A/D_t \le 1.5$) *	
* Recommended dimensions	

QA/QC Check

Completeness_____ Legibility_____ Accuracy_____

Specifications_____ Reasonableness_____

Certification

I certify that the Type S probe ID _____ meets or exceeds all specifications, criteria, and applicable design features.

Certified by:_____ Date:_____

Table 2G-2. Rotational Position Check

Source:_____ Date:_____

Test Location:_____ Tester(s):_____

Probe Type:_____ Affiliation:_____

Probe ID:_____ Fully-Assembled Probe Length in mm (in.):_____

Position	Angle Comparisons		
Distance of 2nd measurement device from probe head impact port in mm (in.)	1st Device Angle measured by device aligned on the reference scribe line, including algebraic sign (degrees)	2nd Device Angle measured by device mounted at each position to be used during testing, including algebraic sign (degrees)	R_{ADO} Difference between readings by 1st and 2nd angle-measuring devices (degrees)[a]
(Col. A)	(Col. B)	(Col. C)	(Col. C - Col. B)

[a] The algebraic sign must be consistent with section 8.3.2.

Specifications: For the pre-test rotational position check, the value of R_{ADO} at each location along the probe shaft must be determined to within ±1°. In the post-test check, R_{ADO} at each location must remain within ±2° of the value obtained in the pre-test check.

Table 2G-3. Example EPA Method 2G Field Data Form

Source: _____ Date: _____

Source Location: _____ Test Personnel: _____

Measurement Location: _____ Probe Type: _____

Run ID:		Stack Diameter:		
Start Time:		Stack Area:		
End Time:		Barometric Pressure (P_{bar}):	in. Hg	
Pitot Tube ID:		Static Pressure (P_g):	in. H_2O	
Pitot Tube Coefficient (C_p):		R_{SLO}		
Pressure Gauge ID:		R_{ADO}		
Pressure Gauge Readability:	in. H_2O		Pre-test	Post-test
Temperature Gauge ID:		Pitot Tube Condition: Damage Noted?		
Measurement System Response Time	sec.	Leak Check Performed?		

Clock Time	Traverse Point	Yaw Angle, including algebraic sign (degrees)	Differential Pressure (Δ P)	Stack or Duct Gas Temperature (° F)

Table 2G-4. Wind Tunnel Velocity Pressure Cross-Check

Wind Tunnel Facility: _____
Date: _____
Wind Tunnel Temperature: _____
Barometric Pressure: _____
Test Point Locations: _____
Lowest Test Velocity in m/sec (ft/sec): _____
Highest Test Velocity in m/sec (ft/sec): _____

Port		Rep.	Velocity Pressure (ΔP_{std}) @ Lowest Test Velocity	Velocity Pressure (ΔP_{std}) @ Highest Test Velocity
Calibration Pitot Tube Location		1		
		2		
		3		
		Average		
Calibration Location Test Points *	1	1		
		2		
		3		
		Average		
		% Difference **		
	2	1		
		2		
		3		
		Average		
		% Difference **		
	..	1		
		2		
		3		
		Average		
		% Difference **		

* Measurements must be taken at all points in the calibration location as specified in section 10.1.1

** Percent Difference = $\frac{(\textit{Calibration Location Test Point Avg} - \textit{Cal. Pitot Tube Location Avg})}{\textit{Cal. Pitot Tube Location Avg}} \times 100\%$

Specification: At each velocity setting, the average velocity pressure obtained at the calibration location shall be within ±2 percent or 0.01 in. H_2O, whichever is less restrictive, of the average velocity pressure obtained at the fixed calibration pitot tube location.

Table 2G-5. Wind Tunnel Axial Flow Verification

Wind Tunnel Facility: _____
Date: _____
Wind Tunnel Temperature: _____
Barometric Pressure: _____
Probe Type/I.D. Used To Conduct Check: _____
Test Point Locations: _____
Lowest Test Velocity in m/sec (ft/sec): _____
Highest Test Velocity in m/sec (ft/sec): _____

Port		@ Lowest Test Velocity		@ Highest Test Velocity	
		Yaw Angle * (degrees)	Pitch Angle * (degrees)	Yaw Angle * (degrees)	Pitch Angle * (degrees)
Calibration Location Test Points **	1				
	2				
	3				
	..				
Calibration Pitot Tube Location					

* When following the procedures in section 10.1.2.1, both the yaw and pitch angles are obtained from the same port. When following the procedures in section 10.1.2.2, the yaw angle is obtained using the port for the tested probe, and the pitch angle is obtained using the port for verification of axial flow.

** Yaw and pitch angle measurements must be taken at all points that define the calibration location (as per the requirements in section 10.1.1)

Specification: At each velocity setting, each measured yaw and pitch angle shall be within ±3° of 0° in accordance with the requirements in section 10.1.2.

Table 2G-6. Yaw Angle Calibration

Probe Type: _____ **Tester(s):** _____

Probe ID: _____ **Affiliation:** _____

Test Location: _____ **Date:** _____

	Repetition 1		Repetition 2	
Nominal Velocity Setting in m/sec (ft/sec)	**θ_{null} (degrees)**	**R_{SLO} (degrees)***	**θ_{null} (degrees)**	**R_{SLO} (degrees)***
_____	_____	_____	_____	_____
_____	_____	_____	_____	_____
_____	_____	_____	_____	_____
_____	_____	_____	_____	_____
_____	_____	_____	_____	_____
_____	_____	_____	_____	_____
_____	_____	_____	_____	_____
_____	_____	_____	_____	_____
_____	_____	_____	_____	_____
Average of all recorded R_{SLO} values:			_____	

* Include magnitude and algebraic sign in accordance with section 10.5.6.

Table 2G-7. Determining the Magnitude of Reference Scribe Line Offset

Probe/Angle-Measuring Device	Magnitude of R_{SLO}
Type S probe with inclinometer	θ_{null}
Type S probe with protractor wheel and pointer	$90° - \theta_{null}$
3-D probe with inclinometer	$90° - \theta_{null}$
3-D probe with protractor wheel and pointer	θ_{null}

Table 2G-8. Probe Calibration for Method 2G

Wind Tunnel Facility: _____
Wind Tunnel Location: _____
Probe Type: _____
Probe ID: _____
Probe Calibration Date: _____
Test Point Location: _____
Ambient Temperature (°F): _____
Barometric Pressure (P_{bar}): _____

Repetition	Low Velocity Setting (ft/sec)	Calibration Pitot		Tested Probe		Calculated C_p or F_2
		ΔP_{std} (in. H_2O)	Temp. (°F)	ΔP or P_1-P_2 (in. H_2O)	Yaw Angle (°)	
1						
2						
3						
					Average ($C_{p(avg\text{-}low)}$) =	

Repetition	High Velocity Setting (ft/sec)	Calibration Pitot		Tested Probe		Calculated C_p or F_2
		ΔP_{std} (in. H_2O)	Temp. (°F)	ΔP or P_1-P_2 (in. H_2O)	Yaw Angle (°)	
1						
2						
3						
					Average ($C_{p(avg\text{-}high)}$) =	

$$\%\ \text{Difference} = \frac{C_{p(avg-low)} - C_{p(avg-high)}}{C_{p(avg-low)}} \times 100\% = _____\%$$

Note: (1) The percent difference between the low and high velocity setting C_p values shall be within ±3 percent.
(2) If calibrating a 3-D probe for this method, the pitch angle setting must be 0°.

METHOD 2H—DETERMINATION OF STACK GAS VELOCITY TAKING INTO ACCOUNT VELOCITY DECAY NEAR THE STACK WALL

1.0 Scope and Application

1.1 This method is applicable in conjunction with Methods 2, 2F, and 2G (40 CFR Part 60, Appendix A) to account for velocity decay near the wall in circular stacks and ducts.

1.2 This method is not applicable for testing stacks and ducts less than 3.3 ft (1.0 m) in diameter.

1.3 Data Quality Objectives. Adherence to the requirements of this method will enhance the quality of the data obtained from air pollutant sampling methods.

2.0 Summary of Method

2.1 A wall effects adjustment factor is determined. It is used to adjust the average stack gas velocity obtained under Method 2, 2F, or 2G of this appendix to take into account velocity decay near the stack or duct wall.

2.2 The method contains two possible procedures: a calculational approach which derives an adjustment factor from velocity measurements and a default procedure which assigns a generic adjustment factor based on the construction of the stack or duct.

2.2.1 The calculational procedure derives a wall effects adjustment factor from velocity measurements taken using Method 2, 2F, or 2G at 16 (or more) traverse points specified under Method 1 of this appendix and a total of eight (or more) wall effects traverse points specified under this method. The calculational procedure based on velocity measurements is not applicable for horizontal circular ducts where build-up of particulate matter or other material in the bottom of the duct is present.

2.2.2 A default wall effects adjustment factor of 0.9900 for brick and mortar stacks and 0.9950 for all other types of stacks and ducts may be used without taking wall effects measurements in a stack or duct.

2.3 When the calculational procedure is conducted as part of a relative accuracy test audit (RATA) or other multiple-run test procedure, the wall effects adjustment factor derived from a single traverse (i.e., single RATA run) may be applied to all runs of the same RATA without repeating the wall effects measurements. Alternatively, wall effects adjustment factors may be derived for several traverses and an average wall effects adjustment factor applied to all runs of the same RATA.

3.0 Definitions.

3.1 *Complete wall effects traverse* means a traverse in which measurements are taken at d_{rem} (see section 3.3) and at 1-in. intervals in each of the four Method 1 equal-area sectors closest to the wall, beginning not farther than 4 in. (10.2 cm) from the wall and extending either (1) across the entire width of the Method 1 equal-area sector or (2) for stacks or ducts where this width exceeds 12 in. (30.5 cm) (i.e., stacks or ducts greater than or equal to 15.6 ft [4.8 m] in diameter), to a distance of not less than 12 in. (30.5 cm) from the wall. Note: Because this method specifies that measurements must be taken at whole number multiples of 1 in. from a stack or duct wall, for clarity numerical quantities in this method are expressed in English units followed by metric units in parentheses. To enhance readability, hyphenated terms such as ''1-in. intervals'' or ''1-in. incremented,'' are expressed in English units only.

3.2 d_{last} Depending on context, d_{last} means either (1) the distance from the wall of the last 1-in. incremented wall effects traverse point or (2) the traverse point located at that distance (see Figure 2H–2).

3.3 d_{rem} Depending on context, d_{rem} means either (1) the distance from the wall of the centroid of the area between d_{last} and the interior edge of the Method 1 equal-area sector closest to the wall or (2) the traverse point located at that distance (see Figure 2H–2).

3.4 *''May,'' ''Must,'' ''Shall,'' ''Should,''* and the imperative form of verbs.

3.4.1 *''May''* is used to indicate that a provision of this method is optional.

3.4.2 *''Must,'' ''Shall,''* and the imperative form of verbs (such as ''record'' or ''enter'') are used to indicate that a provision of this method is mandatory.

3.4.3 *''Should''* is used to indicate that a provision of this method is not mandatory but is highly recommended as good practice.

3.5 *Method 1* refers to 40 CFR part 60, appendix A, ''Method 1—Sample and velocity traverses for stationary sources.''

3.6 *Method 1 exterior equal-area sector and Method 1 equal-area sector closest to the wall* mean any one of the four equal-area sectors that are closest to the wall for a circular stack or duct laid out in accordance with section 2.3.1 of Method 1 (see Figure 2H–1).

3.7 *Method 1 interior equal-area sector* means any of the equal-area sectors other than the Method 1 exterior equal-area sectors (as defined in section 3.6) for a circular stack or duct laid out in accordance with section 2.3.1 of Method 1 (see Figure 2H–1).

3.8 *Method 1 traverse point and Method 1 equal-area traverse point* mean a traverse point located at the centroid of an equal-area sector of a circular stack laid out in accordance with section 2.3.1 of Method 1.

3.9 *Method 2* refers to 40 CFR part 60, appendix A, ''Method 2—Determination of stack gas velocity and volumetric flow rate (Type S pitot tube).''

3.10 *Method 2F* refers to 40 CFR part 60, appendix A, ''Method 2F—Determination of stack gas velocity and volumetric flow rate with three-dimensional probes.''

3.11 *Method 2G* refers to 40 CFR part 60, appendix A, ''Method 2G—Determination of stack gas velocity and volumetric flow rate with two-dimensional probes.''

3.12 *1-in. incremented wall effects traverse point* means any of the wall effects traverse points that are located at 1-in. intervals, i.e., traverse points d_1 through d_{last} (see Figure 2H–2).

3.13 *Partial wall effects traverse* means a traverse in which measurements are taken at fewer than the number of traverse points required for a ''complete wall effects traverse'' (as defined in section 3.1), but are taken at a minimum of two traverse points in each Method 1 equal-area sector closest to the wall, as specified in section 8.2.2.

3.14 *Relative accuracy test audit (RATA)* is a field test procedure performed in a stack or duct in which a series of concurrent measurements of the same stack gas stream is taken by a reference method and an installed monitoring system. A RATA usually consists of series of 9 to 12 sets of such concurrent measurements, each of which is referred to as a RATA run. In a volumetric flow RATA, each reference method run consists of a complete traverse of the stack or duct.

3.15 *Wall effects-unadjusted average velocity* means the average stack gas velocity, not accounting for velocity decay near the wall, as determined in accordance with Method 2, 2F, or 2G for a Method 1 traverse consisting of 16 or more points.

3.16 *Wall effects-adjusted average velocity* means the average stack gas velocity, taking into account velocity decay near the wall, as calculated from measurements at 16 or more Method 1 traverse points and at the additional wall effects traverse points specified in this method.

3.17 *Wall effects traverse point* means a traverse point located in accordance with sections 8.2.2 or 8.2.3 of this method.

4.0 Interferences [Reserved]

5.0 Safety

5.1 This method may involve hazardous materials, operations, and equipment. This method does not purport to address all of the health and safety considerations associated with its use. It is the responsibility of the user of this method to establish appropriate health and safety practices and to determine the applicability of occupational health and safety regulatory requirements prior to performing this method.

6.0 Equipment and Supplies

6.1 The provisions pertaining to equipment and supplies in the method that is used to take the traverse point measurements (i.e., Method 2, 2F, or 2G) are applicable under this method.

7.0 Reagents and Standards [Reserved]

8.0 Sample Collection and Analysis

8.1 Default Wall Effects Adjustment Factors. A default wall effects adjustment factor of 0.9900 for brick and mortar stacks and 0.9950 for all other types of stacks and ducts may be used without conducting the following procedures.

8.2 Traverse Point Locations. Determine the location of the Method 1 traverse points in accordance with section 8.2.1 and the location of the traverse points for either a partial wall effects traverse in accordance with section 8.2.2 or a complete wall effects traverse in accordance with section 8.2.3.

8.2.1 Method 1 equal-area traverse point locations. Determine the location of the Method 1 equal-area traverse points for a traverse consisting of 16 or more points using Table 1–2 (Location of Traverse Points in Circular Stacks) of Method 1.

8.2.2 Partial wall effects traverse. For a partial wall effects traverse, measurements must be taken at a minimum of the following two wall effects traverse point locations in all four Method 1 equal-area sectors closest to the wall: (1) 1 in. (2.5 cm) from the wall (except as provided in section 8.2.2.1) and (2) d_{rem}, as determined using Equation 2H–1 or 2H–2 (see section 8.2.2.2).

8.2.2.1 If the probe cannot be positioned at 1 in. (2.5 cm) from the wall (e.g., because of insufficient room to withdraw the probe shaft) or if velocity pressure cannot be detected at 1 in. (2.5 cm) from the wall (for any reason other than build-up of particulate matter in the bottom of a duct), take measurements at the 1-in. incremented wall effects traverse point closest to the wall where the probe can be positioned and velocity pressure can be detected.

8.2.2.2 Calculate the distance of d_{rem} from the wall to within ±¼ in. (6.4 mm) using Equation 2H–1 or Equation 2H–2 (for a 16-point traverse).

$$d_{last} \leq d_b \qquad \text{Eq. 2H-3}$$

Where:

r=the stack or duct radius determined from direct measurement of the stack or duct diameter in accordance with section 8.6 of Method 2F or Method 2G, in. (cm);

p=the number of Method 1 equal-area traverse points on a diameter, $p \geq 8$ (e.g., for a 16-point traverse, p=8); d_{last} and d_{rem} are defined in sections 3.2 and 3.3 respectively, in. (cm).

For a 16-point Method 1 traverse, Equation 2H–1 becomes:

$$d_{rem} = r - \sqrt{\frac{7}{8}r^2 - rd_{last} + \frac{1}{2}d_{last}^2} \qquad \text{Eq. 2H-2}$$

8.2.2.3 Measurements may be taken at any number of additional wall effects traverse points, with the following provisions.

(a) d_{last} must not be closer to the center of the stack or duct than the distance of the interior edge (boundary), d_b, of the Method 1 equal-area sector closest to the wall (see Figure 2H–2 or 2H–3). That is,

Where:

$$d_b = r\left(1 - \sqrt{1 - \frac{2}{p}}\right) \qquad \text{Eq. 2H-4}$$

Table 2H–1 shows d_b as a function of the stack or duct radius, r, for traverses ranging from 16 to 48 points (i.e., for values of p ranging from 8 to 24).

(b) Each point must be located at a distance that is a whole number (e.g., 1, 2, 3) multiple of 1 in. (2.5 cm).

(c) Points do not have to be located at consecutive 1-in. intervals. That is, one or more 1-in. incremented points may be skipped. For example, it would be acceptable for points to be located at 1 in. (2.5 cm), 3 in. (7.6 cm), 5 in. (12.7 cm), d_{last}, and d_{rem}; or at 1 in. (2.5 cm), 2 in. (5.1 cm), 4 in. (10.2 cm), 7 in. (17.8 cm), d_{last}, and d_{rem}. Follow the instructions in section 8.7.1.2 of this method for recording results for wall effects traverse points that are skipped. It should be noted that the full extent of velocity decay may not be accounted for if measurements are not taken at all 1-in. incremented points close to the wall.

8.2.3 Complete wall effects traverse. For a complete wall effects traverse, measurements must be taken at the following points in all four Method 1 equal-area sectors closest to the wall.

(a) The 1-in. incremented wall effects traverse point closest to the wall where the probe can be positioned and velocity can be detected, but no farther than 4 in. (10.2 cm) from the wall.

(b) Every subsequent 1-in. incremented wall effects traverse point out to the interior edge of the Method 1 equal-area sector or to 12 in. (30.5 cm) from the wall, whichever comes first. Note: In stacks or ducts with diameters greater than 15.6 ft (4.8 m) the interior edge of the Method 1 equal-area sector is farther from the wall than 12 in. (30.5 cm).

(c) d_{rem}, as determined using Equation 2H–1 or 2H–2 (as applicable). Note: For a complete traverse of a stack or duct with a diameter less than 16.5 ft (5.0 m), the distance between d_{rem} and d_{last} is less than or equal to ½ in. (12.7 mm). As discussed in section 8.2.4.2, when the distance between d_{rem} and d_{last} is less than or equal to ½ in. (12.7 mm), the velocity measured at d_{last} may be used for d_{rem}. Thus, it is not necessary to calculate the distance of d_{rem} or to take measurements at d_{rem} when conducting a complete traverse of a stack or duct with a diameter less than 16.5 ft (5.0 m).

8.2.4 Special considerations. The following special considerations apply when the distance between traverse points is less than or equal to ½ in. (12.7 mm).

8.2.4.1 A wall effects traverse point and the Method 1 traverse point. If the distance between a wall effects traverse point and the Method 1 traverse point is less than or equal to ½ in. (12.7 mm), taking measurements at both points is allowed but not required or recommended; if measurements are taken at only one point, take the measurements at the point that is farther from the wall and use the velocity obtained at that point as the value for both points (see sections 8.2.3 and 9.2 for related requirements).

8.2.4.2 d_{rem} and d_{last}. If the distance between d_{rem} and d_{last} is less than or equal to ½ in. (12.7 mm), taking measurements at d_{rem} is allowed but not required or recommended; if measurements are not taken at d_{rem}, the measured velocity value at d_{last} must be used as the value for both d_{last} and d_{rem}.

8.3 Traverse Point Sampling Order and Probe Selection. Determine the sampling order of the Method 1 and wall effects traverse points and select the appropriate probe for the measurements, taking into account the following considerations.

8.3.1 Traverse points on any radius may be sampled in either direction (i.e., from the wall toward the center of the stack or duct, or vice versa).

8.3.2 To reduce the likelihood of velocity variations during the time of the traverse and the attendant potential impact on the wall effects-adjusted and unadjusted average velocities, the following provisions of this method shall be met.

8.3.2.1 Each complete set of Method 1 and wall effects traverse points accessed from the same port shall be sampled without interruption. Unless traverses are performed simultaneously in all ports using separate probes at each port, this provision disallows first sampling all Method 1 points at all ports and then sampling all the wall effects points.

8.3.2.2 The entire integrated Method 1 and wall effects traverse across all test ports shall be as short as practicable, consistent with the measurement system response time

(see section 8.4.1.1) and sampling (see section 8.4.1.2) provisions of this method.

8.3.3 It is recommended but not required that in each Method 1 equal-area sector closest to the wall, the Method 1 equal-area traverse point should be sampled in sequence between the adjacent wall effects traverse points. For example, for the traverse point configuration shown in Figure 2H–2, it is recommended that the Method 1 equal-area traverse point be sampled between d_{last} and d_{rem}. In this example, if the traverse is conducted from the wall toward the center of the stack or duct, it is recommended that measurements be taken at points in the following order: d_1, d_2, d_{last}, the Method 1 traverse point, d_{rem}, and then at the traverse points in the three Method 1 interior equal-area sectors.

8.3.4 The same type of probe must be used to take measurements at all Method 1 and wall effects traverse points. However, different copies of the same type of probe may be used at different ports (e.g., Type S probe 1 at port A, Type S probe 2 at port B) or at different traverse points accessed from a particular port (e.g., Type S probe 1 for Method 1 interior traverse points accessed from port A, Type S probe 2 for wall effects traverse points and the Method 1 exterior traverse point accessed from port A). The identification number of the probe used to obtain measurements at each traverse point must be recorded.

8.4 Measurements at Method 1 and Wall Effects Traverse Points. Conduct measurements at Method 1 and wall effects traverse points in accordance with Method 2, 2F, or 2G and in accordance with the provisions of the following subsections (some of which are included in Methods 2F and 2G but not in Method 2), which are particularly important for wall effects testing.

8.4.1 Probe residence time at wall effects traverse points. Due to the steep temperature and pressure gradients that can occur close to the wall, it is very important for the probe residence time (i.e., the total time spent at a traverse point) to be long enough to ensure collection of representative temperature and pressure measurements. The provisions of Methods 2F and 2G in the following subsections shall be observed.

8.4.1.1 System response time. Determine the response time of each probe measurement system by inserting and positioning the ''cold'' probe (at ambient temperature and pressure) at any Method 1 traverse point. Read and record the probe differential pressure, temperature, and elapsed time at 15-second intervals until stable readings for both pressure and temperature are achieved. The response time is the longer of these two elapsed times. Record the response time.

8.4.1.2 Sampling. At the start of testing in each port (i.e., after a probe has been inserted into the stack gas stream), allow at least the response time to elapse before beginning to take measurements at the first traverse point accessed from that port. Provided that the probe is not removed from the stack gas stream, measurements may be taken at subsequent traverse points accessed from the same test port without waiting again for the response time to elapse.

8.4.2 Temperature measurement for wall effects traverse points. Either (1) take temperature measurements at each wall effects traverse point in accordance with the applicable provisions of Method 2, 2F, or 2G; or (2) use the temperature measurement at the Method 1 traverse point closest to the wall as the temperature measurement for all the wall effects traverse points in the corresponding equal-area sector.

8.4.3 Non-detectable velocity pressure at wall effects traverse points. If the probe cannot be positioned at a wall effects traverse point or if no velocity pressure can be detected at a wall effects point, measurements shall be taken at the first subsequent wall effects traverse point farther from the wall where velocity can be detected. Follow the instructions in section 8.7.1.2 of this method for recording results for wall effects traverse points where velocity pressure cannot be detected. It should be noted that the full extent of velocity decay may not be accounted for if measurements are not taken at the 1-in. incremented wall effects traverse points closest to the wall.

8.5 Data Recording. For each wall effects and Method 1 traverse point where measurements are taken, record all pressure, temperature, and attendant measurements prescribed in section 3 of Method 2 or section 8.0 of Method 2F or 2G, as applicable.

8.6 Point Velocity Calculation. For each wall effects and Method 1 traverse point, calculate the point velocity value (v_i) in accordance with sections 12.1 and 12.2 of Method 2F for tests using Method 2F and in accordance with sections 12.1 and 12.2 of Method 2G for tests using Method 2 and Method 2G. (Note that the term (v_i) in this method corresponds to the term ($v_{a(i)}$) in Methods 2F and 2G.) When the equations in the indicated sections of Method 2G are used in deriving point velocity values for Method 2 tests, set the value of the yaw angles appearing in the equations to 0°.

8.7 Tabulating Calculated Point Velocity Values for Wall Effects Traverse Points. Enter the following values in a hardcopy or electronic form similar to Form 2H–1 (for 16-point Method 1 traverses) or Form 2H–2 (for Method 1 traverses consisting of more than 16 points). A separate form must be completed for each of the four Method 1 equal-area sectors that are closest to the wall.

(a) Port ID (e.g., A, B, C, or D)

(b) Probe type

(c) Probe ID

(d) Stack or duct diameter in ft (m) (determined in accordance with section 8.6 of Method 2F or Method 2G)

(e) Stack or duct radius in in. (cm)

(f) Distance from the wall of wall effects traverse points at 1-in. intervals, in ascending order starting with 1 in. (2.5 cm) (column A of Form 2H–1 or 2H–2)

(g) Point velocity values (v_d) for 1-in. incremented traverse points (see section 8.7.1), including d_{last} (see section 8.7.2)

(h) Point velocity value (v_{drem}) at d_{rem} (see section 8.7.3).

8.7.1 Point velocity values at wall effects traverse points other than d_{last}. For every 1-in. incremented wall effects traverse point other than d_{last}, enter in column B of Form 2H–1 or 2H–2 either the velocity measured at the point (see section 8.7.1.1) or the velocity measured at the first subsequent traverse point farther from the wall (see section 8.7.1.2). A velocity value must be entered in column B of Form 2H–1 or 2H–2 for every 1-in. incremented traverse point from d_1 (representing the wall effects traverse point 1 in. [2.5 cm] from the wall) to d_{last}.

8.7.1.1 For wall effects traverse points where the probe can be positioned and velocity pressure can be detected, enter the value obtained in accordance with section 8.6.

8.7.1.2 For wall effects traverse points that were skipped [see section 8.2.2.3(c)] and for points where the probe cannot be positioned or where no velocity pressure can be detected, enter the value obtained at the first subsequent traverse point farther from the wall where velocity pressure was detected and measured and follow the entered value with a ''flag,'' such as the notation ''NM,'' to indicate that ''no measurements'' were actually taken at this point.

8.7.2 Point velocity value at d_{last}. For d_{last}, enter in column B of Form 2H–1 or 2H–2 the measured value obtained in accordance with section 8.6.

8.7.3 Point velocity value (v_{drem}) at d_{rem}. Enter the point velocity value obtained at d_{rem} in column G of row 4a in Form 2H–1 or 2H–2. If the distance between d_{rem} and d_{last} is less than or equal to ½ in. (12.7 mm), the measured velocity value at d_{last} may be used as the value at d_{rem} (see section 8.2.4.2).

9.0 Quality Control.

9.1 Particulate Matter Build-up in Horizontal Ducts. Wall effects testing of horizontal circular ducts should be conducted only if build-up of particulate matter or other material in the bottom of the duct is not present.

9.2 Verifying Traverse Point Distances. In taking measurements at wall effects traverse points, it is very important for the probe impact pressure port to be positioned as close as practicable to the traverse point locations in the gas stream. For this reason, before beginning wall effects testing, it is important to calculate and record the traverse point positions that will be marked on each probe for each port, taking into account the distance that each port nipple (or probe mounting flange for automated probes) extends out of the stack and any extension of the port nipple (or mounting flange) into the gas stream. To ensure that traverse point positions are properly identified, the following procedures should be performed on each probe used.

9.2.1 Manual probes. Mark the probe insertion distance of the wall effects and Method 1 traverse points on the probe sheath so that when a mark is aligned with the outside face of the stack port, the probe impact port is located at the calculated distance of the traverse point from the stack inside wall. The use of different colored marks is recommended for designating the wall effects and Method 1 traverse points. Before the first use of each probe, check to ensure that the distance of each mark from the center of the probe impact pressure port agrees with the previously calculated traverse point positions to within ±¼ in. (6.4 mm).

9.2.2 Automated probe systems. For automated probe systems that mechanically position the probe head at prescribed traverse point positions, activate the system with the probe assemblies removed from the test ports and sequentially extend the probes to the programmed location of each wall effects traverse point and the Method 1 traverse points. Measure the distance between the center of the probe impact pressure port and the inside of the probe assembly mounting flange for each traverse point. The measured distances must agree with the previously calculated traverse point positions to within ±¼ in. (6.4 mm).

9.3 Probe Installation. Properly sealing the port area is particularly important in taking measurements at wall effects traverse points. For testing involving manual probes, the area between the probe sheath and the port should be sealed with a tightly fitting flexible seal made of an appropriate material such as heavy cloth so that leakage is minimized. For automated probe systems, the probe assembly mounting flange area should be checked to verify that there is no leakage.

9.4 Velocity Stability. This method should be performed only when the average gas velocity in the stack or duct is relatively constant over the duration of the test. If the average gas velocity changes significantly during the course of a wall effects test, the test results should be discarded.

10.0 Calibration

10.1 The calibration coefficient(s) or curves obtained under Method 2, 2F, or 2G and used to perform the Method 1 traverse are applicable under this method.

11.0 Analytical Procedure

11.1 Sample collection and analysis are concurrent for this method (see section 8).

12.0 Data Analysis and Calculations

12.1 The following calculations shall be performed to obtain a wall effects adjustment factor (*WAF*) from (1) the wall effects-unadjusted average velocity (*T4avg*), (2) the replacement velocity ($\hat{v}e_j$) for each of the four Method 1 sectors closest to the wall, and (3) the average stack gas velocity that accounts for velocity decay near the wall ($\hat{v}_{avg}$).

12.2 Nomenclature. The following terms are listed in the order in which they appear in Equations 2H–5 through 2H–21.

v_{avg}=the average stack gas velocity, unadjusted for wall effects, actual ft/sec (m/sec);

vi_i=stack gas point velocity value at Method 1 interior equal-area sectors, actual ft/sec (m/sec);

ve_j=stack gas point velocity value, unadjusted for wall effects, at Method 1 exterior equal-area sectors, actual ft/sec (m/sec);

i=index of Method 1 interior equal-area traverse points;

j=index of Method 1 exterior equal-area traverse points;

n=total number of traverse points in the Method 1 traverse;

$vdec_d$=the wall effects decay velocity for a sub-sector located between the traverse points at distances $d-1$ (in metric units, $d-2.5$) and d from the wall, actual ft/sec (m/sec);

v_d=the measured stack gas velocity at distance d from the wall, actual ft/sec (m/sec); Note: v_0=0;

d=the distance of a 1-in. incremented wall effects traverse point from the wall, for traverse points d_1 through d_{last}, in. (cm);

A_d=the cross-sectional area of a sub-sector located between the traverse points at distances $d-1$ (in metric units, $d-2.5$) and d from the wall, in.^{2} (cm^2) (e.g., sub-sector A_2 shown in Figures 2H–3 and 2H–4);

r=the stack or duct radius, in. (cm);

Q_d=the stack gas volumetric flow rate for a sub-sector located between the traverse points at distances $d-1$ (in metric units, $d-2.5$) and d from the wall, actual ft-in.^{2}/sec (m-cm^2/sec);

$Q_{d_1 \rightarrow d_{last}}$=the total stack gas volumetric flow rate for all sub-sectors located between the wall and d_{last}, actual ft-in.^{2}/sec (m-cm^2/sec);

d_{last}=the distance from the wall of the last 1-in. incremented wall effects traverse point, in. (cm);

A_{drem}=the cross-sectional area of the sub-sector located between d_{last} and the interior edge of the Method 1 equal-area sector closest to the wall, in.^{2} (cm^2) (see Figure 2H–4);

p=the number of Method 1 traverse points per diameter, $p \geq 8$ (e.g., for a 16-point traverse, p=8);

d_{rem}=the distance from the wall of the centroid of the area between d_{last} and the interior edge of the Method 1 equal-area sector closest to the wall, in. (cm);

Q_{drem}=the total stack gas volumetric flow rate for the sub-sector located between d_{last} and the interior edge of the Method 1 equal-area sector closest to the wall, actual ft-in.^{2}/sec (m-cm^2/sec);

v_{drem}=the measured stack gas velocity at distance d_{rem} from the wall, actual ft/sec (m/sec);

Q_T=the total stack gas volumetric flow rate for the Method 1 equal-area sector closest to the wall, actual ft-in.^{2}/sec (m-cm^2/sec);

$\hat{v}e_j$=the replacement stack gas velocity for the Method 1 equal-area sector closest to the wall, i.e., the stack gas point velocity value, adjusted for wall effects, for the jth Method 1 equal-area sector closest to the wall, actual ft/sec (m/sec);

$\hat{v}_{avg}$=the average stack gas velocity that accounts for velocity decay near the wall, actual ft/sec (m/sec);

WAF=the wall effects adjustment factor derived from v_{avg} and $\hat{v}_{avg}$ for a single traverse, dimensionless;

$\hat{v}_{final}$=the final wall effects-adjusted average stack gas velocity that replaces the unadjusted average stack gas velocity obtained using Method 2, 2F, or 2G for a field test consisting of a single traverse, actual ft/sec (m/sec);

$\bar{W}\bar{A}\bar{F}$=the wall effects adjustment factor that is applied to the average velocity, unadjusted for wall effects, in order to obtain the final wall effects-adjusted stack gas velocity, $\hat{v}_{final}$ or, $\hat{v}_{final(k)}$, dimensionless;

$\hat{v}_{final(k)}$=the final wall effects-adjusted average stack gas velocity that replaces the unadjusted average stack gas velocity obtained using Method 2, 2F, or 2G on run k of a RATA or other multiple-run field test procedure, actual ft/sec (m/sec);

$v_{avg(k)}$=the average stack gas velocity, obtained on run k of a RATA or other multiple-run procedure, unadjusted for velocity decay near the wall, actual ft/sec (m/sec);

k=index of runs in a RATA or other multiple-run procedure.

12.3 Calculate the average stack gas velocity that does not account for velocity decay near the wall (v_{avg}) using Equation 2H–5.

$$v_{avg} = \frac{\left(\sum_{i=1}^{n-4} vi_i + \sum_{j=1}^{4} ve_j\right)}{n} \qquad \text{Eq. 2H-5}$$

(Note that v_{avg} in Equation 2H–5 is the same as $v_{(a)avg}$ in Equations 2F–9 and 2G–8 in Methods 2F and 2G, respectively.)

For a 16-point traverse, Equation 2H–5 may be written as follows:

$$v_{avg} = \frac{\left(\sum_{i=1}^{12} vi_i + \sum_{j=1}^{4} ve_j\right)}{16} \qquad \text{Eq. 2H-6}$$

12.4 Calculate the replacement velocity, $\hat{v}e_j$, for each of the four Method 1 equal-area sectors closest to the wall using the procedures described in sections 12.4.1 through 12.4.8. Forms 2H–1 and 2H–2 provide sample tables that may be used in either hardcopy or spreadsheet format to perform the calculations described in sections 12.4.1 through 12.4.8. Forms 2H–3 and 2H–4 provide examples of Form 2H–1 filled in for partial and complete wall effects traverses.

12.4.1 Calculate the average velocity (designated the ''decay velocity,'' $vdec_d$) for each sub-sector located between the wall and d_{last} (see Figure 2H–3) using Equation 2H–7.

$$vdec_d = \frac{v_{d-1} + v_d}{2} \qquad \text{Eq. 2H-7}$$

For each line in column A of Form 2H–1 or 2H–2 that contains a value of d, enter the corresponding calculated value of $vdec_d$ in column C.

12.4.2 Calculate the cross-sectional area between the wall and the first 1-in. incremented wall effects traverse point and between successive 1-in. incremented wall effects traverse points, from the wall to d_{last} (see Figure 2H–3), using Equation 2H–8.

$$A_d = \frac{1}{4}\pi(r - d + 1)^2 - \frac{1}{4}\pi(r - d)^2 \qquad \text{Eq. 2H-8}$$

For each line in column A of Form 2H–1 or 2H–2 that contains a value of d, enter the value of the expression $\frac{1}{4}\pi(r-d+1)^2$ in column D, the value of the expression $\frac{1}{4}\pi(r-d)^2$ in column E, and the value of A_d in column F. Note that Equation 2H–8 is designed for use only with English units (in.). If metric units (cm) are used, the first term, $\frac{1}{4}\pi(r-d+1)^2$, must be changed to $\frac{1}{4}\pi(r-d+2.5)^2$. This change must also be made in column D of Form 2H–1 or 2H–2.

12.4.3 Calculate the volumetric flow through each cross-sectional area derived in section 12.4.2 by multiplying the values of $vdec_d$, derived according to section 12.4.1, by the cross-sectional areas derived in section 12.4.2 using Equation 2H–9.

$$Q_d = vdec_d \times A_d \qquad \text{Eq. 2H-9}$$

For each line in column A of Form 2H–1 or 2H–2 that contains a value of d, enter the corresponding calculated value of Q_d in column G.

12.4.4 Calculate the total volumetric flow through all sub-sectors located between the wall and d_{last}, using Equation 2H–10.

$$Q_{d_1 \to d_{last}} = \sum_{d=1}^{d_{last}} Q_d \qquad \text{Eq. 2H-10}$$

Enter the calculated value of $Q_{d_1 \to d_{last}}$ in line 3 of column G of Form 2H–1 or 2H–2.

12.4.5 Calculate the cross-sectional area of the sub-sector located between d_{last} and the interior edge of the Method 1 equal-area sector (e.g., sub-sector A_{drem} shown in Figures 2H–3 and 2H–4) using Equation 2H–11.

$$A_{drem} = \frac{1}{4}\pi\left(r - d_{last}\right)^2 - \frac{p-2}{4p}\pi(r)^2 \qquad \text{Eq. 2H-11}$$

For a 16-point traverse (eight points per diameter), Equation 2H–11 may be written as follows:

$$A_{drem} = \frac{1}{4}\pi\left(r - d_{last}\right)^2 - \frac{3}{16}\pi(r)^2 \qquad \text{Eq. 2H-12}$$

Enter the calculated value of A_{drem} in line 4b of column G of Form 2H–1 or 2H–2.

12.4.6 Calculate the volumetric flow for the sub-sector located between d_{last} and the interior edge of the Method 1 equal-area sector, using Equation 2H–13.

$$Q_{drem} = v_{drem} \times A_{drem} \qquad \text{Eq. 2H-13}$$

In Equation 2H–13, v_{drem} is either (1) the measured velocity value at d_{rem} or (2) the measured velocity at d_{last}, if the distance between d_{rem} and d_{last} is less than or equal to ½ in. (12.7 mm) and no velocity measurement is taken at d_{rem} (see section 8.2.4.2). Enter the calculated value of Q_{drem} in line 4c of column G of Form 2H–1 or 2H–2.

12.4.7 Calculate the total volumetric flow for the Method 1 equal-area sector closest to the wall, using Equation 2H–14.

$$Q_T = Q_{d_1 \to d_{last}} + Q_{drem} \qquad \text{Eq. 2H-14}$$

Enter the calculated value of Q_T in line 5a of column G of Form 2H–1 or 2H–2.

12.4.8 Calculate the wall effects-adjusted replacement velocity value for the Method 1 equal-area sector closest to the wall, using Equation 2H–15.

$$\hat{v}e_j = \frac{Q_T}{\frac{1}{2p}\pi(r)^2} \qquad \text{Eq. 2H-15}$$

For a 16-point traverse (eight points per diameter), Equation 2H–15 may be written as follows:

$$\hat{v}e_j = \frac{Q_T}{\frac{1}{16}\pi(r)^2} \qquad \text{Eq. 2H-16}$$

Enter the calculated value of $\hat{v}e_j$ in line 5B of column G of Form 2H–1 or 2H–2.

12.5 Calculate the wall effects-adjusted average velocity, $\hat{v}_{avg}$, by replacing the four values of ve_j shown in Equation 2H–5 with the four wall effects-adjusted replacement velocity values, $\hat{v}e_j$, calculated according to section 12.4.8, using Equation 2H–17.

$$\hat{v}_{avg} = \frac{\left(\sum_{i=1}^{n-4} vi_i + \sum_{j=1}^{4} \hat{v}e_j\right)}{n} \qquad \text{Eq. 2H-17}$$

For a 16-point traverse, Equation 2H–17 may be written as follows:

$$\hat{v}_{avg} = \frac{\left(\sum_{i=1}^{12} vi_i + \sum_{j=1}^{4} \hat{v}e_j\right)}{16} \qquad \text{Eq. 2H-18}$$

12.6 Calculate the wall effects adjustment factor, WAF, using Equation 2H–19.

$$WAF = \frac{\hat{v}_{avg}}{v_{avg}} \qquad \text{Eq. 2H-19}$$

12.6.1 Partial wall effects traverse. If a partial wall effects traverse (see section 8.2.2) is conducted, the value obtained from Equation 2H–19 is acceptable and may be reported as the wall effects adjustment factor provided that the value is greater than or equal to 0.9800. If the value is less than 0.9800, it shall not be used and a wall effects adjustment factor of 0.9800 may be used instead.

12.6.2 Complete wall effects traverse. If a complete wall effects traverse (see section 8.2.3) is conducted, the value obtained from Equation 2H–19 is acceptable and may be reported as the wall effects adjustment factor provided that the value is greater than or equal to 0.9700. If the value is less than 0.9700, it shall not be used and a wall effects adjustment factor of 0.9700 may be used instead. If the wall effects adjustment factor for a particular stack or duct is less than 0.9700, the tester may (1) repeat the wall effects test, taking measurements at more Method 1 traverse points and (2) recalculate the wall effects adjustment factor from these measurements, in an attempt to obtain a wall effects adjustment factor that meets the 0.9700 specification and completely characterizes the wall effects.

12.7 Applying a Wall Effects Adjustment Factor. A default wall effects adjustment factor, as specified in section 8.1, or a calculated wall effects adjustment factor meeting the requirements of section 12.6.1 or 12.6.2

may be used to adjust the average stack gas velocity obtained using Methods 2, 2F, or 2G to take into account velocity decay near the wall of circular stacks or ducts. Default wall effects adjustment factors specified in section 8.1 and calculated wall effects adjustment factors that meet the requirements of section 12.6.1 and 12.6.2 are summarized in Table 2H–2.

12.7.1 Single-run tests. Calculate the final wall effects-adjusted average stack gas velocity for field tests consisting of a single traverse using Equation 2H–20.

$$\hat{v}_{final} = \overline{WAF} \times v_{avg} \qquad \text{Eq. 2H-20}$$

The wall effects adjustment factor, WAF, shown in Equation 2H–20, may be (1) a default wall effects adjustment factor, as specified in section 8.1, or (2) a calculated adjustment factor that meets the specifications in sections 12.6.1 or 12.6.2. If a calculated adjustment factor is used in Equation 2H–20, the factor must have been obtained during the same traverse in which v_{avg} was obtained.

12.7.2 RATA or other multiple run test procedure. Calculate the final wall effects-adjusted average stack gas velocity for any run k of a RATA or other multiple-run procedure using Equation 2H–21.

$$\hat{v}_{final(k)} = \overline{WAF} \times v_{avg(k)} \qquad \text{Eq. 2H-21}$$

The wall effects adjustment factor, $\overline{WAF}$, shown in Equation 2H–21 may be (1) a default wall effects adjustment factor, as specified in section 8.1; (2) a calculated adjustment factor (meeting the specifications in sections 12.6.1 or 12.6.2) obtained from any single run of the RATA that includes run k; or (3) the arithmetic average of more than one WAF (each meeting the specifications in sections 12.6.1 or 12.6.2) obtained through wall effects testing conducted during several runs of the RATA that includes run k. If wall effects adjustment factors (meeting the specifications in sections 12.6.1 or 12.6.2) are determined for more than one RATA run, the arithmetic average of all of the resulting calculated wall effects adjustment factors must be used as the value of $\overline{WAF}$ and applied to all runs of that RATA. If a calculated, not a default, wall effects adjustment factor is used in Equation 2H–21, the average velocity unadjusted for wall effects, $v_{avg(k)}$ must be obtained from runs in which the number of Method 1 traverse points sampled does not exceed the number of Method 1 traverse points in the runs used to derive the wall effects adjustment factor, $\overline{WAF}$, shown in Equation 2H–21.

12.8 Calculating Volumetric Flow Using Final Wall Effects-Adjusted Average Velocity Value. To obtain a stack gas flow rate that accounts for velocity decay near the wall of circular stacks or ducts, replace v_s in Equation 2–10 in Method 2, or $v_{a(avg)}$ in Equations 2F–10 and 2F–11 in Method 2F, or $v_{a(avg)}$ in Equations 2G–9 and 2G–10 in Method 2G with one of the following.

12.8.1 For single-run test procedures, use the final wall effects-adjusted average stack gas velocity, $\hat{v}_{final}$, calculated according to Equation 2H–20.

12.8.2 For RATA and other multiple run test procedures, use the final wall effects-adjusted average stack gas velocity, $\hat{v}_{final(k)}$, calculated according to Equation 2H–21.

13.0 Method Performance [Reserved]

14.0 Pollution Prevention [Reserved]

15.0 Waste Management [Reserved]

16.0 Reporting

16.1 Field Test Reports. Field test reports shall be submitted to the Agency according to the applicable regulatory requirements. When Method 2H is performed in conjunction with Method 2, 2F, or 2G to derive a wall effects adjustment factor, a single consolidated Method 2H/2F (or 2H/2G) field test report should be prepared. At a minimum, the consolidated field test report should contain (1) all of the general information, and data for Method 1 points, specified in section 16.0 of Method 2F (when Method 2H is used in conjunction with Method 2F) or section 16.0 of Method 2G (when Method 2H is used in conjunction with Method 2 or 2G) and (2) the additional general information, and data for Method 1 points and wall effects points, specified in this section (some of which are included in section 16.0 of Methods 2F and 2G and are repeated in this section to ensure complete reporting for wall effects testing).

16.1.1 Description of the source and site. The field test report should include the descriptive information specified in section 16.1.1 of Method 2F (when using Method 2F) or 2G (when using either Method 2 or 2G). It should also include a description of the stack or duct's construction material along with the diagram showing the dimensions of the stack or duct at the test port elevation prescribed in Methods 2F and 2G. The diagram should indicate the location of all wall effects traverse points where measurements were taken as well as the Method 1 traverse points. The diagram should provide a unique identification number for each wall effects and Method 1 traverse point, its distance from the wall, and its location relative to the probe entry ports.

16.1.2 Field test forms. The field test report should include a copy of Form 2H–1, 2H–2, or an equivalent for each Method 1 exterior equal-area sector.

16.1.3 Field test data. The field test report should include the following data for the Method 1 and wall effects traverse.

16.1.3.1 Data for each traverse point. The field test report should include the values

specified in section 16.1.3.2 of Method 2F (when using Method 2F) or 2G (when using either Method 2 or 2G) for each Method 1 and wall effects traverse point. The provisions of section 8.4.2 of Method 2H apply to the temperature measurements reported for wall effects traverse points. For each wall effects and Method 1 traverse point, the following values should also be included in the field test report.

(a) Traverse point identification number for each Method 1 and wall effects traverse point.

(b) Probe type.

(c) Probe identification number.

(d) Probe velocity calibration coefficient (i.e., C_p when Method 2 or 2G is used; F_2 when Method 2F is used).

For each Method 1 traverse point in an exterior equal-area sector, the following additional value should be included.

(e) Calculated replacement velocity, $\hat{v}e_j$, accounting for wall effects.

16.1.3.2 Data for each run. The values specified in section 16.1.3.3 of Method 2F (when using Method 2F) or 2G (when using either Method 2 or 2G) should be included in the field test report once for each run. The provisions of section 12.8 of Method 2H apply for calculating the reported gas volumetric flow rate. In addition, the following Method 2H run values should also be included in the field test report.

(a) Average velocity for run, accounting for wall effects, $\hat{v}_{avg}$.

(b) Wall effects adjustment factor derived from a test run, WAF.

16.1.3.3 Data for a complete set of runs. The values specified in section 16.1.3.4 of Method 2F (when using Method 2F) or 2G (when using either Method 2 or 2G) should be included in the field test report once for each complete set of runs. In addition, the field test report should include the wall effects adjustment factor, $\bar{W}\bar{A}\bar{F}$, that is applied in accordance with section 12.7.1 or 12.7.2 to obtain the final wall effects-adjusted average stack gas velocity $\hat{v}_{final}$ or $\hat{v}_{final(k)}$.

16.1.4 Quality assurance and control. Quality assurance and control procedures, specifically tailored to wall effects testing, should be described.

16.2 Reporting a Default Wall Effects Adjustment Factor. When a default wall effects adjustment factor is used in accordance with section 8.1 of this method, its value and a description of the stack or duct's construction material should be reported in lieu of submitting a test report.

17.0 References.

(1) 40 CFR Part 60, Appendix A, Method 1—Sample and velocity traverses for stationary sources.

(2) 40 CFR Part 60, Appendix A, Method 2—Determination of stack gas velocity and volumetric flow rate (Type S pitot tube).

(3) 40 CFR Part 60, Appendix A, Method 2F—Determination of stack gas velocity and volumetric flow rate with three-dimensional probes.

(4) 40 CFR Part 60, Appendix A, Method 2G—Determination of stack gas velocity and volumetric flow rate with two-dimensional probes.

(5) 40 CFR Part 60, Appendix A, Method 3—Gas analysis for carbon dioxide, oxygen, excess air, and dry molecular weight.

(6) 40 CFR Part 60, Appendix A, Method 3A—Determination of oxygen and carbon dioxide concentrations in emissions from stationary sources (instrumental analyzer procedure).

(7) 40 CFR Part 60, Appendix A, Method 4—Determination of moisture content in stack gases.

(8) Emission Measurement Center (EMC) Approved Alternative Method (ALT–011) ''Alternative Method 2 Thermocouple Calibration Procedure.''

(9) The Cadmus Group, Inc., 1998, ''EPA Flow Reference Method Testing and Analysis: Data Report, Texas Utilities, DeCordova Steam Electric Station, Volume I: Test Description and Appendix A (Data Distribution Package),'' EPA/430–R–98–015a.

(10) The Cadmus Group, Inc., 1998, ''EPA Flow Reference Method Testing and Analysis: Data Report, Texas Utilities, Lake Hubbard Steam Electric Station, Volume I: Test Description and Appendix A (Data Distribution Package),'' EPA/430–R–98–017a.

(11) The Cadmus Group, Inc., 1998, ''EPA Flow Reference Method Testing and Analysis: Data Report, Pennsylvania Electric Co., G.P.U. Genco Homer City Station: Unit 1, Volume I: Test Description and Appendix A (Data Distribution Package),'' EPA/430–R–98–018a.

(12) The Cadmus Group, Inc., May 1999, ''EPA Flow Reference Method Testing and Analysis: Findings Report,'' EPA/430–R–99–009.

(13) The Cadmus Group, Inc., 1997, ''EPA Flow Reference Method Testing and Analysis: Wind Tunnel Experimental Results,'' EPA/430–R–97–013.

(14) National Institute of Standards and Technology, 1998, ''Report of Special Test of Air Speed Instrumentation, Four Prandtl Probes, Four S-Type Probes, Four French Probes, Four Modified Kiel Probes,'' Prepared for the U.S. Environmental Protection Agency under IAG No. DW13938432–01–0.

(15) National Institute of Standards and Technology, 1998, ''Report of Special Test of Air Speed Instrumentation, Five Autoprobes,'' Prepared for the U.S. Environmental Protection Agency under IAG No. DW13938432–01–0.

(16) National Institute of Standards and Technology, 1998, ''Report of Special Test of Air Speed Instrumentation, Eight Spherical Probes,'' Prepared for the U.S. Environmental Protection Agency under IAG No. DW13938432–01–0.

(17) National Institute of Standards and Technology, 1998, ''Report of Special Test of Air Speed Instrumentation, Four DAT Probes,'' Prepared for the U.S. Environmental Protection Agency under IAG No. DW13938432–01–0.

(18) Massachusetts Institute of Technology (MIT), 1998, ''Calibration of Eight Wind Speed Probes Over a Reynolds Number Range of 46,000 to 725,000 per Foot, Text and Summary Plots,'' Plus Appendices, WBWT-TR–1317, Prepared for The Cadmus Group, Inc., under EPA Contract 68–W6–0050, Work Assignment 0007AA–3.

(19) Fossil Energy Research Corporation, Final Report, ''Velocity Probe Tests in Non-axial Flow Fields,'' November 1998, Prepared for the U.S. Environmental Protection Agency.

(20) Fossil Energy Research Corporation, ''Additional Swirl Tunnel Tests: E-DAT and T-DAT Probes,'' February 24, 1999, Technical Memorandum Prepared for U.S. Environmental Protection Agency, P.O. No. 7W–1193–NALX.

Table 2H-1. Distance from the Wall for the Interior Boundary, d_b, of a Method 1 Exterior Equal-Area Sector as a Function of the Stack or Duct Radius, r, and Number of Method 1 Traverse Points

Number of Method 1 Traverse Points	d_b
16	0.134 × r
20	0.106 × r
24	0.087 × r
28	0.074 × r
32	0.065 × r
36	0.057 × r
40	0.051 × r
44	0.047 × r
48	0.043 × r

Table 2H-2 Default and Minimum Acceptable Calculated Wall Effects Adjustment Factors

		Brick and Mortar Stacks	All Other Stacks and Ducts
Default WAF		0.9900	0.9950
Minimum Acceptable WAF	**Partial Traverse**	0.9800	
	Complete Traverse	0.9700	

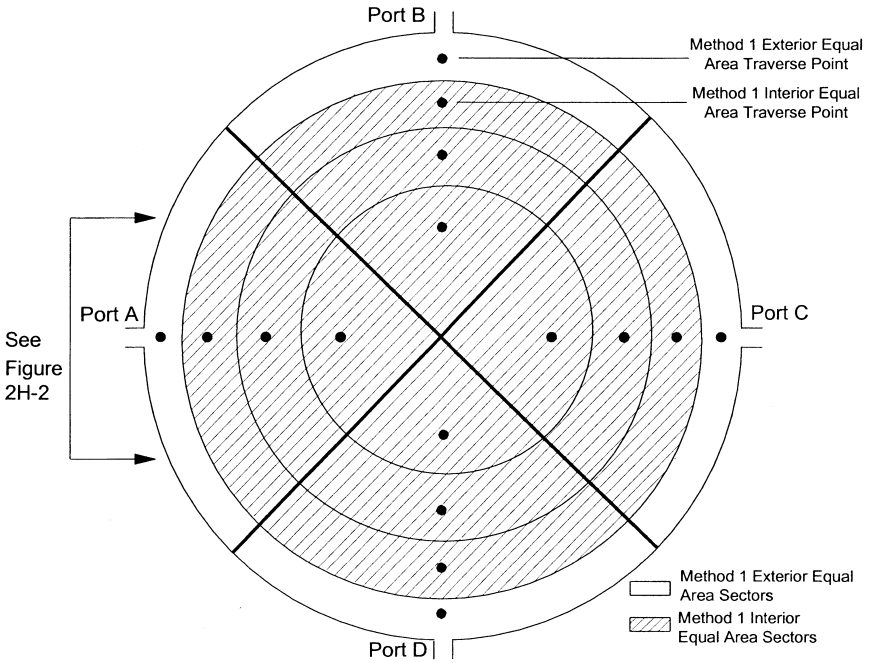

Figure 2H-1. Method 1 exterior and interior equal-area sectors with traverse points indicated.

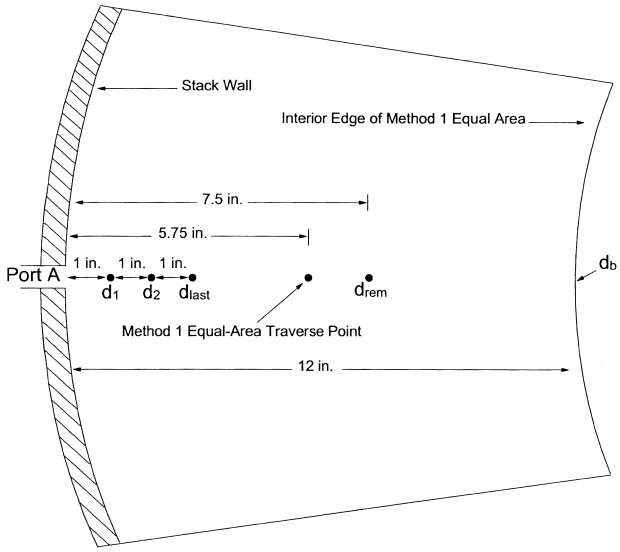

Figure 2H-2. Figure showing part of a Method 1 equal-area sector closest to the stack wall with three illustrative wall effects points at 1 in. intervals, the Method 1 equal-area traverse point, and d_{rem} for a 15 ft diameter stack.[1]

[1] Metric equivalents of English units used in Figure 2H-2 are as follows: 1 in. = 2.5 cm; 5.75 in. = 14.6 cm; 7.5 in. = 19.0 cm; 12 in. = 30.5 cm; and 15 ft = 4.6 m.

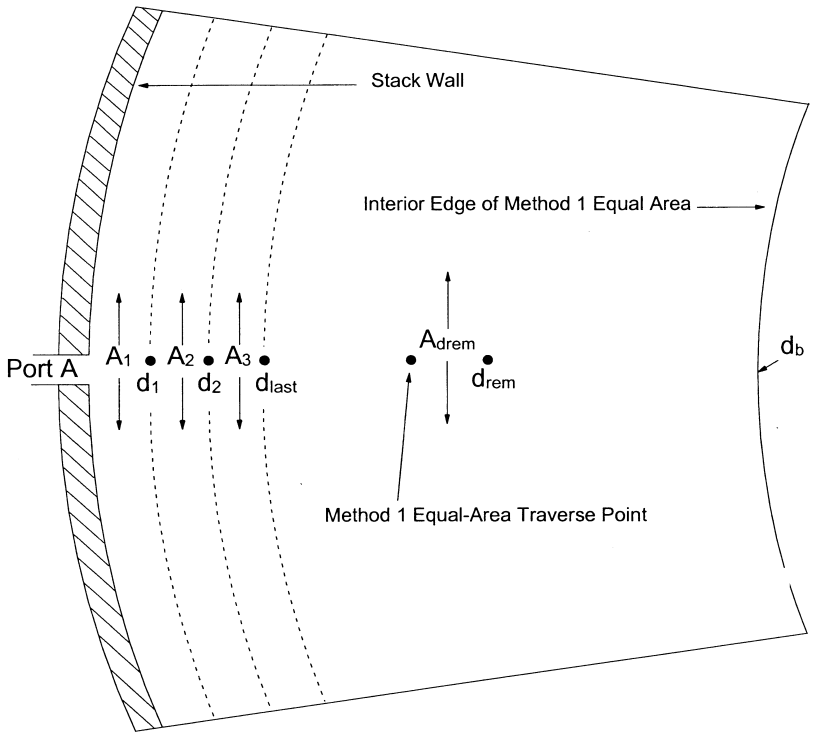

Figure 2H-3. Figure showing part of a Method 1 equal-area sector closest to the stack wall with three illustrative sub-sectors between the stack wall and d_{last} and the sub-sector represented by d_{rem}. A_1 is the area between the stack wall and d_1, A_2 is the area between d_1 and d_2, A_3 is the area between d_2 and d_{last}, and A_{drem} is the area between d_{last} and the interior edge of the Method 1 equal-area sector.

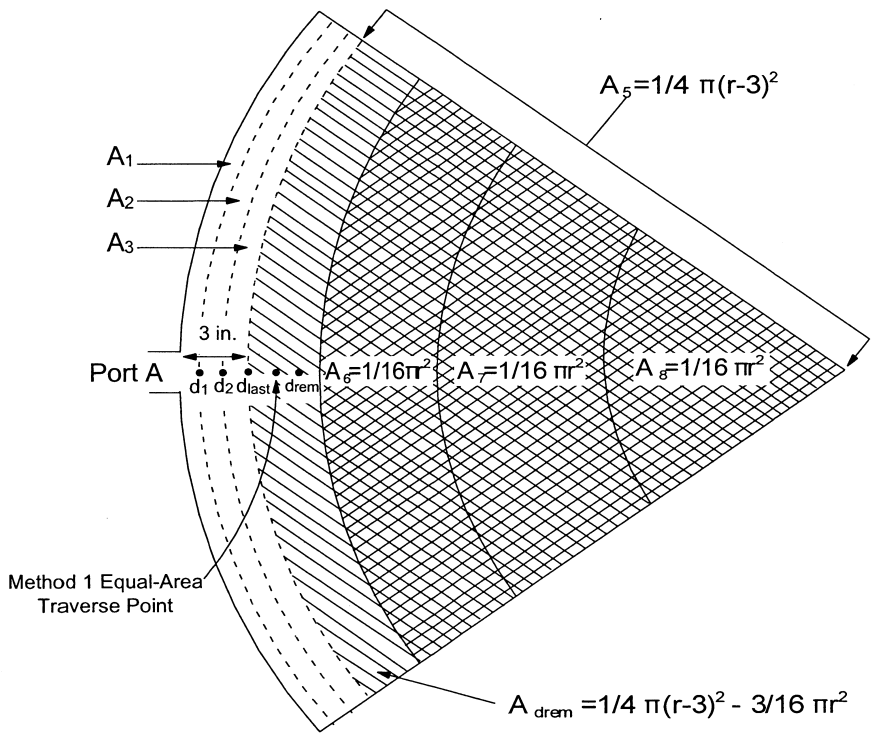

Figure 2H-4. Figure illustrating the calculations in Equation 2H-12 used to calculate the cross sectional area of the sub-sector between d_{last} and the interior edge of the Method 1 sector closest to the stack wall (A_{drem}) for a 16-point Method 1 traverse. The Method 1 equal-area traverse point and four wall effects traverse points (d_1, d_2, d_{last}, and d_{rem}) within the Method 1 sector closest to the stack wall are also shown.[1]

[1] All dimensions are given in in. Metric equivalents (in cm) are as follows: 3 in. = 7.6 cm; $A_5 = 1/4\ \pi(r-7.6)^2$; and $A_{drem} = 1/4\ \pi(r-7.6)^2 - 3/16\ \pi r^2$.

Form 2H-1. Calculation of Wall Effects Replacement Velocity Values (16-Point Method 1 Traverse)

1st Probe Type/ID/Pts. Sampled: _____ Tester(s): _____

2nd Probe Type/ID/Pts. Sampled: _____ Affiliation: _____

Entry Port ID (e.g., A, B, C, or D): _____

1. Diameter of the stack or duct (ft)		Radius, r, of the stack or duct (in.) (= diameter × 6)	

2. Location (column A), measured and decay velocities (columns B and C), and volumetric flow (column G) associated with each successive wall effects traverse point.

(A)	(B)	(C)	(D)	(E)	(F)	(G)
Distance (d) from Wall	Measured Velocity (v_d) at Distance d	Decay Velocity ($vdec_d$)	Intermediate Calculations		Area of Sub-sector (A_d)	Volumetric Flow in Sub-sector (Q_d)
		$\frac{v_{d-1}+v_d}{2}$ Note: $v_0 = 0$	$\frac{1}{4}\pi[r-d+1]^2$	$\frac{1}{4}\pi[r-d]^2$	(Col. D - Col. E)	(Col. C × Col. F)
(*in.*)	(*ft/sec*)	(*ft/sec*)	(*in.*^{2})	(*in.*^{2})	(*in.*^{2})	(*ft-in.*^{2}*/sec*)
$d = 1$						
$d = 2$						
. . .						
d_{last}						

Note: $d_{last} \leq 0.1340\ r$, where r is the radius of the stack or duct. See section 8.2.2.3 of the method.

3. Total volumetric flow for all sub-sectors located between stack wall and d_{last} (total Col. G).	
4. Volumetric flow for remainder of the Method 1 equal-area sector.	
a. Velocity measurement at distance d_{rem} from stack wall (v_{drem}). (If d_{rem}- d_{last}<½ in., then no measurement at d_{rem} is necessary. Enter the velocity at d_{last} on this line.)	
b. Total area in remainder of Method 1 equal-area segment (A_{drem}). Subtract $\frac{3}{16}\pi(r)^2$ from last entry in item 2, column E, and enter the result on this line.	
c. Multiply values on lines 4a and 4b. (Q_{drem})	
5. Wall effects-adjusted velocity in the Method 1 equal-area sector.	
a. Add the values on lines 3 and 4c. (Q_T)	
b. Divide line 5a by $\frac{1}{16}\pi(r)^2$. The resulting value is one of four "replacement" point velocity values adjusted for wall effects, $\hat{v}e_j$, as derived in Equation 2H-16.	
6. Substitute the value shown in 5b for the unadjusted velocity value in the Method 1 sector. (See Eq. 2H-18.)	

Notes: 1. Column B: If no measurement is taken at distance d, enter the velocity value obtained at the first subsequent traverse point where a measurement was taken, followed by the letters "NM". See section 8.7.1.2.

2. For clarity, only English units are shown in this form. Following are metric equivalents of the English units used in the form. In row 2, column A: 1 in. = 2.5 cm; 2 in. = 5.1 cm. In row 2, column D: If metric units (cm) are used, the term $\frac{1}{4}\pi(r-d+1)^2$ must be changed to $\frac{1}{4}\pi(r-d+2.5)^2$. In row 4a: ½ in. = 12.7 mm. Throughout the form, the metric equivalents of *in.*, *in.*^{2}, *ft*, *ft/sec*, and *ft-in*^{2}*/sec* are *cm*, *cm*^{2}, *m*, *m/sec*, and *m-cm*^{2}*/sec*, respectively.

Form 2H-2. Calculation of Wall Effects Replacement Velocity Values (Any Method 1 Traverse ≥16 Points)

1st Probe Type/ID/Pts. Sampled: _____ Tester(s): _____

2nd Probe Type/ID/Pts. Sampled: _____ Affiliation: _____

Entry Port ID (e.g., A, B, C, or D): _____

1. Diameter of the stack or duct (ft)		Radius, r, of the stack or duct (in.) (= diameter × 6)	

2. Location (Column A), measured and decay velocities (Columns B and C), and volumetric flow (Column G) associated with each successive wall effects traverse point.

(A)	(B)	(C)	(D)	(E)	(F)	(G)
Distance (d) from Wall	Measured Velocity (v_d) at Distance d	Decay Velocity ($vdec_d$)	Intermediate Calculations		Area of Sub-sector (A_d)	Volumetric Flow in Sub-sector (Q_d)
		$\frac{v_{d-1}+v_d}{2}$ Note: $v_0 = 0$	$\frac{2}{p}\pi[r-d+1]^2$	$\frac{2}{p}\pi[r-d]^2$	(Col. D - Col. E)	(Col. C × Col. F)
(*in.*)	(*ft/sec*)	(*ft/sec*)	(*in.*^{2})	(*in.*^{2})	(*in.*^{2})	(*ft-in.*^{2}*/sec*)
$d = 1$						
$d = 2$						
. . .						
d_{last}						

Note: $d_{last} \le d_b$, as defined in section 8.2.2.3 of the method.

3. Total volumetric flow for all sub-sectors located between stack wall and d_{last} (total Col. G).	
4. Volumetric flow for remainder of the Method 1 equal-area sector.	
a. Velocity measurement at distance d_{rem} from stack wall (v_{drem}). (If d_{rem}- d_{last}<½ in., then no measurement at d_{rem} is necessary. Enter the velocity at d_{last} on this line.)	
b. Total area in remainder of Method 1 equal-area segment (A_{drem}). Subtract $\left(\frac{p-2}{4p}\right)\pi(r)^2$ from last entry in item 2, column E, and enter the result on this line.	
c. Multiply values on lines 4a and 4b. (Q_{drem})	
5. Wall effects-adjusted velocity in the Method 1 near-wall equal-area segment.	
a. Add the values on lines 3 and 4. (Q_T)	
b. Divide line 5a by $\left(\frac{1}{2p}\right)\pi(r)^2$. The resulting value is one of four "replacement" point velocity values adjusted for wall effects, $\hat{v}e_j$, as derived in Equation 2H-15.	
6. Substitute the value shown in 5b for the unadjusted velocity value in the Method 1 sector. (See Eq. 2H-17.)	

Notes: 1. Column B: If no measurement is taken at distance d, enter the velocity value obtained at the first subsequent traverse point where a measurement was taken, followed by the letters "NM". See section 8.7.1.2.

2. For clarity, only English units are shown in this form. Following are metric equivalents of the English units used in the form. In row 2, column A: 1 in. = 2.5 cm; 2 in. = 5.1 cm. In row 2, column D: If metric units (cm) are used, the term ¼ $\pi(r-d+1)^2$ must be changed to ¼ $\pi(r-d+2.5)^2$. In row 4a: ½ in. = 12.7 mm. Throughout the form, the metric equivalents of *in.*, *in.*^{2}, *ft*, *ft/sec*, and *ft-in*^{2}*/sec* are *cm*, *cm*^{2}, *m*, *m/sec*, and *m-cm*^{2}*/sec*, respectively.

Form 2H-3. Calculation of Replacement Velocity Values for a Method 1 Equal-Area Sector Closest to the Stack Wall for a 16-Point Method 1 Traverse, Using a Partial Wall Effects Traverse

1st Probe Type/ID/Pts. Sampled: *Type S Straight-up/S-13/All* Tester(s): *Test Team III*

2nd Probe Type/ID/Pts. Sampled: _____ Affiliation: *Contractor III*

Entry Port ID (e.g., A, B, C, or D): *A*

1. Diameter of the stack or duct (ft)	24	Radius, r, of the stack or duct (in.) (= diameter × 6)	144

2. Location (column A), measured and decay velocities (columns B and C), and volumetric flow (column G) associated with each successive wall effects traverse point.

(A)	(B)	(C)	(D)	(E)	(F)	(G)
Distance (d) from Wall	Measured Velocity (v_d) at Distance d	Decay Velocity ($vdec_d$)	Intermediate Calculations		Area of Sub-sector (A_d)	Volumetric Flow in Sub-sector (Q_d)
		$\frac{v_{d-1}+v_d}{2}$ Note: $v_0 = 0$	$\frac{1}{4}\pi[r-d+1]^2$	$\frac{1}{4}\pi[r-d]^2$	(Col. D - Col. E)	(Col. C × Col. F)
(in.)	(ft/sec)	(ft/sec)	(in.²)	(in.²)	(in.²)	(ft-in.²/sec)
$d = 1$	51.71 NM	25.85	16,286.00	16,060.59	225.41	5,827.47
$d = 2$	51.71 NM	51.71	16,060.59	15,836.76	223.84	11,573.72
$d_{last} = 3$	51.71	51.71	15,836.76	15,614.49	222.27	11,492.51

3. Total volumetric flow for all sub-sectors located between stack wall and d_{last} (total Col. G).	28,893.70
4. Volumetric flow for remainder of the Method 1 equal-area sector.	
a. Velocity measurement at distance d_{rem} from stack wall (v_{drem}). (If d_{rem}- d_{last} <½ in., then no measurement at d_{rem} is necessary. Enter the velocity at d_{last} on this line.)	77.01
b. Total area in remainder of Method 1 equal-area segment (A_{drem}). Subtract $\frac{3}{16}\pi(r)^2$ from last entry in item 2, column E, and enter the result on this line.	3,399.99
c. Multiply values on lines 4a and 4b. (Q_{drem})	261,832.90
5. Wall effects-adjusted velocity in the Method 1 equal-area sector.	
a. Add the values on lines 3 and 4c. (Q_T)	290,726.61
b. Divide line 5a by $\frac{1}{16}\pi(r)^2$. The resulting value is one of four "replacement" point velocity values adjusted for wall effects, $\hat{v}e_j$, as derived in Equation 2H-16.	71.41
6. Substitute the value shown in 5b for the unadjusted velocity value in the Method 1 sector. (See Eq. 2H-18.)	

Form 2H-4 Calculation of Replacement Velocity Values for a Method 1 Equal-Area Sector Closest to the Stack Wall for a 16-Point Method 1 Traverse, Using a Complete Traverse

1st Probe Type/ID/Pts. Sampled: *Type S Straight-up/S-13/All* Tester(s): *Test Team III*

2nd Probe Type/ID/Pts. Sampled: _____ Affiliation: *Contractor III*

Entry Port ID (e.g., A, B, C, or D): *A*

1. Diameter of the stack or duct (ft)	24	Radius, r, of the stack or duct (in.) (= diameter × 6)	144

2. Location (column A), measured and decay velocities (columns B and C), and volumetric flow (column G) associated with each successive wall effects traverse point.

(A)	(B)	(C)	(D)	(E)	(F)	(G)
Distance (d) from Wall	Measured Velocity (v_d) at Distance d	Decay Velocity ($vdec_d$)	Intermediate Calculations		Area of Sub-sector (A_d)	Volumetric Flow in Sub-sector (Q_d)
		$\frac{v_{d-1}+v_d}{2}$ Note: $v_0 = 0$	$\frac{1}{4}\pi[r-d+1]^2$	$\frac{1}{4}\pi[r-d]^2$	(Col. D - Col. E)	(Col. C × Col. F)
(in.)	(ft/sec)	(ft/sec)	(in.^{2})	(in.^{2})	(in.^{2})	(ft-in.^{2}/sec)
d = 1	51.71 NM	25.85	16,286.00	16,060.59	225.41	5,827.47
d = 2	51.71 NM	51.71	16,060.59	15,836.76	223.84	11,573.72
d = 3	51.71	51.71	15,836.76	15,614.49	222.27	11,492.51
d = 4	62.26	56.98	15,614.49	15,393.79	220.70	12,576.24
d = 5	67.16	64.71	15,393.79	15,174.67	219.13	14,179.40
d = 6	69.44	68.30	15,174.67	14,957.11	217.56	14,858.32
d = 7	72.63	71.03	14,957.11	14,741.13	215.98	15,341.75
d = 8	71.37	72.00	14,741.13	14,526.71	214.41	15,437.01
d = 9	74.37	72.87	14,526.71	14,313.87	212.84	15,510.03
d = 10	75.80	75.08	14,313.87	14,102.60	211.27	15,863.30
d = 11	77.15	76.47	14,102.60	13,892.90	209.70	16,035.93
d_{last} = 12	78.58	77.86	13,892.90	13,684.77	208.13	16,205.92

3. Total volumetric flow for all sub-sectors located between stack wall and d_{last} (total Col. G).	164,901.59
4. Volumetric flow for remainder of the Method 1 equal-area sector.	
a. Velocity measurement at distance d_{rem} from stack wall (v_{drem}). (If d_{rem}- d_{last} <½ in., then no measurement at d_{rem} is necessary. Enter the velocity at d_{last} on this line.)	78.51
b. Total area in remainder of Method 1 equal-area segment (A_{drem}). Subtract $\frac{3}{16}\pi(r)^2$ from last entry in item 2, column E, and enter the result on this line.	1,470.26
c. Multiply values on lines 4a and 4b. (Q_{drem})	115,430.44
5. Wall effects-adjusted velocity in the Method 1 equal-area sector.	
a. Add the values on lines 3 and 4c. (Q_T)	280,332.03
b. Divide line 5a by $\frac{1}{16}\pi(r)^2$. The resulting value is one of four "replacement" point velocity values adjusted for wall effects, $\hat{v}e_i$, as derived in Equation 2H-16.	68.85
6. Substitute the value shown in 5b for the unadjusted velocity value in the Method 1 sector. (See Eq. 2H-18.)	

METHOD 3—GAS ANALYSIS FOR THE DETERMINATION OF DRY MOLECULAR WEIGHT

NOTE: This method does not include all of the specifications (*e.g.*, equipment and supplies) and procedures (*e.g.*, sampling) essential to its performance. Some material is incorporated by reference from other methods in this part. Therefore, to obtain reliable results, persons using this method should also have a thorough knowledge of Method 1.

1.0 Scope and Application

1.1 Analytes.

Analytes	CAS No.	Sensitivity
Oxygen (O_2)	7782–44–7	2,000 ppmv.
Nitrogen (N_2)	7727–37–9	N/A.
Carbon dioxide (CO_2)	124–38–9	2,000 ppmv.
Carbon monoxide (CO)	630–08–0	N/A.

1.2 Applicability. This method is applicable for the determination of CO_2 and O_2 concentrations and dry molecular weight of a sample from an effluent gas stream of a fossil-fuel combustion process or other process.

1.3 Other methods, as well as modifications to the procedure described herein, are also applicable for all of the above determinations. Examples of specific methods and modifications include: (1) A multi-point grab sampling method using an Orsat analyzer to analyze the individual grab sample obtained at each point; (2) a method for measuring either CO_2 or O_2 and using stoichiometric calculations to determine dry molecular weight; and (3) assigning a value of 30.0 for dry molecular weight, in lieu of actual measurements, for processes burning natural gas, coal, or oil. These methods and modifications may be used, but are subject to the approval of the Administrator. The method may also be applicable to other processes where it has been determined that compounds other than CO_2, O_2, carbon monoxide (CO), and nitrogen (N_2) are not present in concentrations sufficient to affect the results.

1.4 Data Quality Objectives. Adherence to the requirements of this method will enhance the quality of the data obtained from air pollutant sampling methods.

2.0 Summary of Method

2.1 A gas sample is extracted from a stack by one of the following methods: (1) single-point, grab sampling; (2) single-point, integrated sampling; or (3) multi-point, integrated sampling. The gas sample is analyzed for percent CO_2 and percent O_2. For dry molecular weight determination, either an Orsat or a Fyrite analyzer may be used for the analysis.

3.0 Definitions [Reserved]

4.0 Interferences

4.1 Several compounds can interfere, to varying degrees, with the results of Orsat or Fyrite analyses. Compounds that interfere with CO_2 concentration measurement include acid gases (*e.g.*, sulfur dioxide, hydrogen chloride); compounds that interfere with O_2 concentration measurement include unsaturated hydrocarbons (*e.g.*, acetone, acetylene), nitrous oxide, and ammonia. Ammonia reacts chemically with the O_2 absorbing solution, and when present in the effluent gas stream must be removed before analysis.

5.0 Safety

5.1 Disclaimer. This method may involve hazardous materials, operations, and equipment. This test method may not address all of the safety problems associated with its use. It is the responsibility of the user of this test method to establish appropriate safety and health practices and determine the applicability of regulatory limitations prior to performing this test method.

5.2 Corrosive Reagents.

5.2.1 A typical Orsat analyzer requires four reagents: a gas-confining solution, CO_2 absorbent, O_2 absorbent, and CO absorbent. These reagents may contain potassium hydroxide, sodium hydroxide, cuprous chloride, cuprous sulfate, alkaline pyrogallic acid, and/or chromous chloride. Follow manufacturer's operating instructions and observe all warning labels for reagent use.

5.2.2 A typical Fyrite analyzer contains zinc chloride, hydrochloric acid, and either potassium hydroxide or chromous chloride. Follow manufacturer's operating instructions and observe all warning labels for reagent use.

6.0 Equipment and Supplies

NOTE: As an alternative to the sampling apparatus and systems described herein, other sampling systems (*e.g.*, liquid displacement) may be used, provided such systems are capable of obtaining a representative sample and maintaining a constant sampling rate, and are, otherwise, capable of yielding acceptable results. Use of such systems is subject to the approval of the Administrator.

6.1 Grab Sampling (See Figure 3–1).

6.1.1 Probe. Stainless steel or borosilicate glass tubing equipped with an in-stack or out-of-stack filter to remove particulate matter (a plug of glass wool is satisfactory for this purpose). Any other materials, resistant to temperature at sampling conditions and inert to all components of the gas stream, may be used for the probe. Examples of such materials may include aluminum, copper, quartz glass, and Teflon.

6.1.2 Pump. A one-way squeeze bulb, or equivalent, to transport the gas sample to the analyzer.

6.2 Integrated Sampling (Figure 3–2).

6.2.1 Probe. Same as in Section 6.1.1.

6.2.2 Condenser. An air-cooled or water-cooled condenser, or other condenser no greater than 250 ml that will not remove O_2, CO_2, CO, and N_2, to remove excess moisture which would interfere with the operation of the pump and flowmeter.

6.2.3 Valve. A needle valve, to adjust sample gas flow rate.

6.2.4 Pump. A leak-free, diaphragm-type pump, or equivalent, to transport sample gas to the flexible bag. Install a small surge tank between the pump and rate meter to eliminate the pulsation effect of the diaphragm pump on the rate meter.

6.2.5 Rate Meter. A rotameter, or equivalent, capable of measuring flow rate to ±2 percent of the selected flow rate. A flow rate range of 500 to 1000 ml/min is suggested.

6.2.6 Flexible Bag. Any leak-free plastic (*e.g.*, Tedlar, Mylar, Teflon) or plastic-coated aluminum (*e.g.*, aluminized Mylar) bag, or equivalent, having a capacity consistent with the selected flow rate and duration of the test run. A capacity in the range of 55 to 90 liters (1.9 to 3.2 ft^3) is suggested. To leak-check the bag, connect it to a water manometer, and pressurize the bag to 5 to 10 cm H_2O (2 to 4 in. H_2O). Allow to stand for 10 minutes. Any displacement in the water manometer indicates a leak. An alternative leak-check method is to pressurize the bag to 5 to 10 cm (2 to 4 in.) H_2O and allow to stand overnight. A deflated bag indicates a leak.

6.2.7 Pressure Gauge. A water-filled U-tube manometer, or equivalent, of about 30 cm (12 in.), for the flexible bag leak-check.

6.2.8 Vacuum Gauge. A mercury manometer, or equivalent, of at least 760 mm (30 in.) Hg, for the sampling train leak-check.

6.3 Analysis. An Orsat or Fyrite type combustion gas analyzer.

7.0 Reagents and Standards

7.1 Reagents. As specified by the Orsat or Fyrite-type combustion analyzer manufacturer.

7.2 Standards. Two standard gas mixtures, traceable to National Institute of Standards and Technology (NIST) standards, to be used in auditing the accuracy of the analyzer and the analyzer operator technique:

7.2.1. Gas cylinder containing 2 to 4 percent O_2 and 14 to 18 percent CO_2.

7.2.2. Gas cylinder containing 2 to 4 percent CO_2 and about 15 percent O_2.

8.0 Sample Collection, Preservation, Storage, and Transport

8.1 Single Point, Grab Sampling Procedure.

8.1.1 The sampling point in the duct shall either be at the centroid of the cross section or at a point no closer to the walls than 1.0 m (3.3 ft), unless otherwise specified by the Administrator.

8.1.2 Set up the equipment as shown in Figure 3–1, making sure all connections ahead of the analyzer are tight. If an Orsat analyzer is used, it is recommended that the analyzer be leak-checked by following the procedure in Section 11.5; however, the leak-check is optional.

8.1.3 Place the probe in the stack, with the tip of the probe positioned at the sampling point. Purge the sampling line long enough to allow at least five exchanges. Draw a sample into the analyzer, and immediately analyze it for percent CO_2 and percent O_2 according to Section 11.2.

8.2 Single-Point, Integrated Sampling Procedure.

8.2.1 The sampling point in the duct shall be located as specified in Section 8.1.1.

8.2.2 Leak-check (optional) the flexible bag as in Section 6.2.6. Set up the equipment as shown in Figure 3–2. Just before sampling, leak-check (optional) the train by placing a vacuum gauge at the condenser inlet, pulling a vacuum of at least 250 mm Hg (10 in. Hg), plugging the outlet at the quick disconnect, and then turning off the pump. The vacuum should remain stable for at least 0.5 minute. Evacuate the flexible bag. Connect the probe, and place it in the stack, with the tip of the probe positioned at the sampling point. Purge the sampling line. Next, connect the bag, and make sure that all connections are tight.

8.2.3 Sample Collection. Sample at a constant rate (±10 percent). The sampling run should be simultaneous with, and for the same total length of time as, the pollutant emission rate determination. Collection of at least 28 liters (1.0 ft^3) of sample gas is recommended; however, smaller volumes may be collected, if desired.

8.2.4 Obtain one integrated flue gas sample during each pollutant emission rate determination. Within 8 hours after the sample is taken, analyze it for percent CO_2 and percent O_2 using either an Orsat analyzer or a Fyrite type combustion gas analyzer according to Section 11.3.

NOTE: When using an Orsat analyzer, periodic Fyrite readings may be taken to verify/confirm the results obtained from the Orsat.

8.3 Multi-Point, Integrated Sampling Procedure.

8.3.1 Unless otherwise specified in an applicable regulation, or by the Administrator, a minimum of eight traverse points shall be used for circular stacks having diameters less than 0.61 m (24 in.), a minimum of nine shall be used for rectangular stacks having equivalent diameters less than 0.61 m (24 in.), and a minimum of 12 traverse points shall be used for all other cases. The traverse points shall be located according to Method 1.

8.3.2 Follow the procedures outlined in Sections 8.2.2 through 8.2.4, except for the following: Traverse all sampling points, and

sample at each point for an equal length of time. Record sampling data as shown in Figure 3–3.

9.0 Quality Control

Section	Quality control measure	Effect
8.2	Use of Fyrite to confirm Orsat results	Ensures the accurate measurement of CO_2 and O_2.
10.1	Periodic audit of analyzer and operator technique.	Ensures that the analyzer is operating properly and that the operator performs the sampling procedure correctly and accurately.
11.3	Replicable analyses of integrated samples.	Minimizes experimental error.

10.0 Calibration and Standardization

10.1 Analyzer. The analyzer and analyzer operator's technique should be audited periodically as follows: take a sample from a manifold containing a known mixture of CO_2 and O_2, and analyze according to the procedure in Section 11.3. Repeat this procedure until the measured concentration of three consecutive samples agrees with the stated value ±0.5 percent. If necessary, take corrective action, as specified in the analyzer users manual.

10.2 Rotameter. The rotameter need not be calibrated, but should be cleaned and maintained according to the manufacturer's instruction.

11.0 Analytical Procedure

11.1 Maintenance. The Orsat or Fyrite-type analyzer should be maintained and operated according to the manufacturers specifications.

11.2 Grab Sample Analysis. Use either an Orsat analyzer or a Fyrite-type combustion gas analyzer to measure O_2 and CO_2 concentration for dry molecular weight determination, using procedures as specified in the analyzer user's manual. If an Orsat analyzer is used, it is recommended that the Orsat leak-check, described in Section 11.5, be performed before this determination; however, the check is optional. Calculate the dry molecular weight as indicated in Section 12.0. Repeat the sampling, analysis, and calculation procedures until the dry molecular weights of any three grab samples differ from their mean by no more than 0.3 g/g-mole (0.3 lb/lb-mole). Average these three molecular weights, and report the results to the nearest 0.1 g/g-mole (0.1 lb/lb-mole).

11.3 Integrated Sample Analysis. Use either an Orsat analyzer or a Fyrite-type combustion gas analyzer to measure O_2 and CO_2 concentration for dry molecular weight determination, using procedures as specified in the analyzer user's manual. If an Orsat analyzer is used, it is recommended that the Orsat leak-check, described in Section 11.5, be performed before this determination; however, the check is optional. Calculate the dry molecular weight as indicated in Section 12.0. Repeat the analysis and calculation procedures until the individual dry molecular weights for any three analyses differ from their mean by no more than 0.3 g/g-mole (0.3 lb/lb-mole). Average these three molecular weights, and report the results to the nearest 0.1 g/g-mole (0.1 lb/lb-mole).

11.4 Standardization. A periodic check of the reagents and of operator technique should be conducted at least once every three series of test runs as outlined in Section 10.1.

11.5 Leak-Check Procedure for Orsat Analyzer. Moving an Orsat analyzer frequently causes it to leak. Therefore, an Orsat analyzer should be thoroughly leak-checked on site before the flue gas sample is introduced into it. The procedure for leak-checking an Orsat analyzer is as follows:

11.5.1 Bring the liquid level in each pipette up to the reference mark on the capillary tubing, and then close the pipette stopcock.

11.5.2 Raise the leveling bulb sufficiently to bring the confining liquid meniscus onto the graduated portion of the burette, and then close the manifold stopcock.

11.5.3 Record the meniscus position.

11.5.4 Observe the meniscus in the burette and the liquid level in the pipette for movement over the next 4 minutes.

11.5.5 For the Orsat analyzer to pass the leak-check, two conditions must be met:

11.5.5.1 The liquid level in each pipette must not fall below the bottom of the capillary tubing during this 4-minute interval.

11.5.5.2 The meniscus in the burette must not change by more than 0.2 ml during this 4-minute interval.

11.5.6 If the analyzer fails the leak-check procedure, check all rubber connections and stopcocks to determine whether they might be the cause of the leak. Disassemble, clean, and regrease any leaking stopcocks. Replace leaking rubber connections. After the analyzer is reassembled, repeat the leak-check procedure.

12.0 Calculations and Data Analysis

12.1 Nomenclature.

M_d=Dry molecular weight, g/g-mole (lb/lb-mole).

$\%CO_2$=Percent CO_2 by volume, dry basis.

$\%O_2$=Percent O_2 by volume, dry basis.

%CO=Percent CO by volume, dry basis.

$\%N_2$=Percent N_2 by volume, dry basis.

0.280 =Molecular weight of N_2 or CO, divided by 100.

0.320 =Molecular weight of O_2 divided by 100.

0.440 =Molecular weight of CO_2 divided by 100.

12.2 Nitrogen, Carbon Monoxide Concentration. Determine the percentage of the gas that is N_2 and CO by subtracting the sum of the percent CO_2 and percent O_2 from 100 percent.

12.3 Dry Molecular Weight. Use Equation 3–1 to calculate the dry molecular weight of the stack gas.

$$M_d = 0.440(\%CO_2) + 0.320(\%O_2) + 0.280(\%N_2 + \%CO) \qquad \text{Eq. 3-1}$$

NOTE: The above Equation 3–1 does not consider the effect on calculated dry molecular weight of argon in the effluent gas. The concentration of argon, with a molecular weight of 39.9, in ambient air is about 0.9 percent. A negative error of approximately 0.4 percent is introduced. The tester may choose to include argon in the analysis using procedures subject to approval of the Administrator.

13.0 Method Performance [Reserved]

14.0 Pollution Prevention [Reserved]

15.0 Waste Management [Reserved]

16.0 References

1. Altshuller, A.P. Storage of Gases and Vapors in Plastic Bags. International Journal of Air and Water Pollution. *6*:75–81. 1963.

2. Conner, William D. and J.S. Nader. Air Sampling with Plastic Bags. Journal of the American Industrial Hygiene Association. *25*:291–297. 1964.

3. Burrell Manual for Gas Analysts, Seventh edition. Burrell Corporation, 2223 Fifth Avenue, Pittsburgh, PA. 15219. 1951.

4. Mitchell, W.J. and M.R. Midgett. Field Reliability of the Orsat Analyzer. Journal of Air Pollution Control Association. *26*:491–495. May 1976.

5. Shigehara, R.T., R.M. Neulicht, and W.S. Smith. Validating Orsat Analysis Data from Fossil Fuel-Fired Units. Stack Sampling News. *4*(2):21–26. August 1976.

17.0 Tables, Diagrams, Flowcharts, and Validation Data

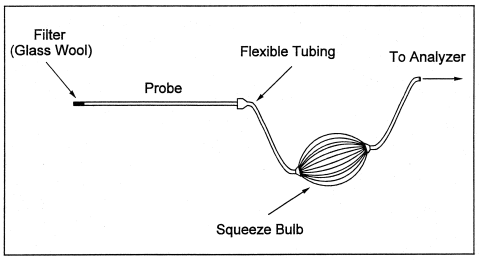

Figure 3-1. Grab-Sampling Train.

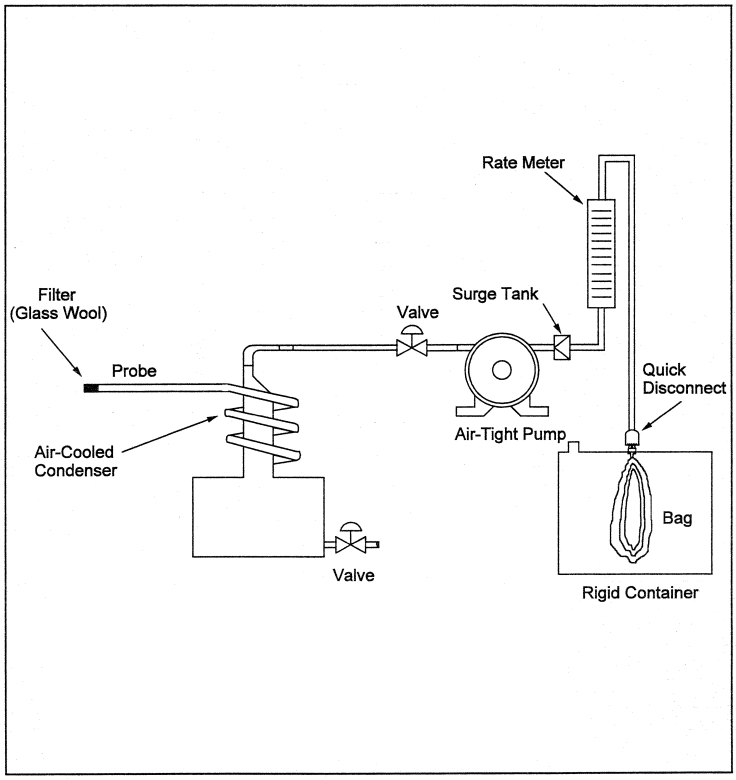

Figure 3-2. Integrated Gas-Sampling Train.

Time	Traverse point	Q (liter/min)	% Deviation [a]
Average			

[a] % Dev.=$[(Q-Q_{avg})/Q_{avg}]\times100$ (Must be $\leq\pm10\%$)

Figure 3–3. Sampling Rate Data

METHOD 3A—DETERMINATION OF OXYGEN AND CARBON DIOXIDE CONCENTRATIONS IN EMISSIONS FROM STATIONARY SOURCES (INSTRUMENTAL ANALYZER PROCEDURE)

1.0 Scope and Application

What is Method 3A?

Method 3A is a procedure for measuring oxygen (O_2) and carbon dioxide (CO_2) in stationary source emissions using a continuous instrumental analyzer. Quality assurance and quality control requirements are included to assure that you, the tester, collect data of known quality. You must document your adherence to these specific requirements for equipment, supplies, sample collection and analysis, calculations, and data analysis.

This method does not completely describe all equipment, supplies, and sampling and

analytical procedures you will need but refers to other methods for some of the details. Therefore, to obtain reliable results, you should also have a thorough knowledge of these additional test methods which are found in appendix A to this part:

(a) Method 1—Sample and Velocity Traverses for Stationary Sources.

(b) Method 3—Gas Analysis for the Determination of Molecular Weight.

(c) Method 4—Determination of Moisture Content in Stack Gases.

(d) Method 7E—Determination of Nitrogen Oxides Emissions from Stationary Sources (Instrumental Analyzer Procedure).

1.1 *Analytes. What does this method determine?* This method measures the concentration of oxygen and carbon dioxide.

Analyte	CAS No.	Sensitivity
Oxygen (O_2)	7782–44–7	Typically <2% of Calibration Span.
Carbon dioxide (CO_2)	124–38–9	Typically <2% of Calibration Span.

1.2 *Applicability. When is this method required?* The use of Method 3A may be required by specific New Source Performance Standards, Clean Air Marketing rules, State Implementation Plans and permits, where measurements of O_2 and CO_2 concentrations in stationary source emissions must be made, either to determine compliance with an applicable emission standard or to conduct performance testing of a continuous emission monitoring system (CEMS). Other regulations may also require the use of Method 3A.

1.3 *Data Quality Objectives. How good must my collected data be?* Refer to Section 1.3 of Method 7E.

2.0 Summary of Method

In this method, you continuously or intermittently sample the effluent gas and convey the sample to an analyzer that measures the concentration of O_2 or CO_2. You must meet the performance requirements of this method to validate your data.

3.0 Definitions

Refer to Section 3.0 of Method 7E for the applicable definitions.

4.0 Interferences [Reserved]

5.0 Safety

Refer to Section 5.0 of Method 7E.

6.0 Equipment and Supplies

Figure 7E–1 in Method 7E is a schematic diagram of an acceptable measurement system.

6.1 What do I need for the measurement system? The components of the measurement system are described (as applicable) in Sections 6.1 and 6.2 of Method 7E, except that the analyzer described in Section 6.2 of this method must be used instead of the analyzer described in Method 7E. You must follow the noted specifications in Section 6.1 of Method 7E except that the requirements to use stainless steel, Teflon, or non-reactive glass filters do not apply. Also, a heated sample line is not required to transport dry gases or for systems that measure the O_2 or CO_2 concentration on a dry basis, provided that the system is not also being used to concurrently measure SO_2 and/or NO_X.

6.2 What analyzer must I use? You must use an analyzer that continuously measures O_2 or CO_2 in the gas stream and meets the specifications in Section 13.0.

7.0 Reagents and Standards

7.1 *Calibration Gas.* What calibration gasses do I need? Refer to Section 7.1 of Method 7E for the calibration gas requirements. Example calibration gas mixtures are listed below. Precleaned or scrubbed air may be used for the O_2 high-calibration gas provided it does not contain other gases that interfere with the O_2 measurement.

(a) CO_2 in nitrogen (N_2).

(b) CO_2 in air.

(c) CO_2/SO_2 gas mixture in N_2.

(d) O_2/SO_2 gas mixture in N_2.

(e) $O_2/CO_2/SO_2$ gas mixture in N_2.

(f) CO_2/NO_X gas mixture in N_2.

(g) $CO_2/SO_2/NO_X$ gas mixture in N_2.

The tests for analyzer calibration error and system bias require high-, mid-, and low-level gases.

7.2 Interference Check. What reagents do I need for the interference check? Potential interferences may vary among available analyzers. Table 7E–3 of Method 7E lists a number of gases that should be considered in conducting the interference test.

8.0 Sample Collection, Preservation, Storage, and Transport

8.1 Sampling Site and Sampling Points. You must follow the procedures of Section 8.1 of Method 7E to determine the appropriate sampling points, unless you are using Method 3A only to determine the stack gas molecular weight and for no other purpose. In that case, you may use single-point integrated sampling as described in Section 8.2.1 of Method 3. If the stratification test provisions in Section 8.1.2 of Method 7E are used to reduce the number of required sampling points,

the alternative acceptance criterion for 3-point sampling will be ± 0.5 percent CO_2 or O_2, and the alternative acceptance criterion for single-point sampling will be ± 0.3 percent CO_2 or O_2. In that case, you may use single-point integrated sampling as described in Section 8.2.1 of Method 3.

8.2 Initial Measurement System Performance Tests. You must follow the procedures in Section 8.2 of Method 7E. If a dilution-type measurement system is used, the special considerations in Section 8.3 of Method 7E apply.

8.3 Interference Check. The O_2 or CO_2 analyzer must be documented to show that interference effects to not exceed 2.5 percent of the calibration span. The interference test in Section 8.2.7 of Method 7E is a procedure that may be used to show this. The effects of all potential interferences at the concentrations encountered during testing must be addressed and documented. This testing and documentation may be done by the instrument manufacturer.

8.4 Sample Collection. You must follow the procedures in Section 8.4 of Method 7E.

8.5 Post-Run System Bias Check and Drift Assessment. You must follow the procedures in Section 8.5 of Method 7E.

9.0 Quality Control

Follow quality control procedures in Section 9.0 of Method 7E.

10.0 Calibration and Standardization

Follow the procedures for calibration and standardization in Section 10.0 of Method 7E.

11.0 Analytical Procedures

Because sample collection and analysis are performed together (see Section 8), additional discussion of the analytical procedure is not necessary.

12.0 Calculations and Data Analysis

You must follow the applicable procedures for calculations and data analysis in Section 12.0 of Method 7E, substituting percent O_2 and percent CO_2 for ppmv of NO_X as appropriate.

13.0 Method Performance

The specifications for the applicable performance checks are the same as in Section 13.0 of Method 7E except for the alternative specifications for system bias, drift, and calibration error. In these alternative specifications, replace the term ''0.5 ppmv'' with the term ''0.5 percent O_2'' or ''0.5 percent CO_2'' (as applicable).

14.0 Pollution Prevention [Reserved]

15.0 Waste Management [Reserved]

16.0 Alternative Procedures [Reserved]

17.0 References

1. ''EPA Traceability Protocol for Assay and Certification of Gaseous Calibration Standards'' September 1997 as amended, EPA–600/R–97/121.

18.0 Tables, Diagrams, Flowcharts, and Validation Data

Refer to Section 18.0 of Method 7E.

METHOD 3B—GAS ANALYSIS FOR THE DETERMINATION OF EMISSION RATE CORRECTION FACTOR OR EXCESS AIR

NOTE: This method does not include all of the specifications (*e.g.*, equipment and supplies) and procedures (*e.g.*, sampling) essential to its performance. Some material is incorporated by reference from other methods in this part. Therefore, to obtain reliable results, persons using this method should have a thorough knowledge of at least the following additional test methods: Method 1 and 3.

1.0 Scope and Application

1.1 Analytes.

Analyte	CAS No.	Sensitivity
Oxygen (O_2)	7782–44–7	2,000 ppmv.
Carbon Dioxide (CO_2)	124–38–9	2,000 ppmv.
Carbon Monoxide (CO)	630–08–0	N/A.

1.2 Applicability. This method is applicable for the determination of O_2, CO_2, and CO concentrations in the effluent from fossil-fuel combustion processes for use in excess air or emission rate correction factor calculations. Where compounds other than CO_2, O_2, CO, and nitrogen (N_2) are present in concentrations sufficient to affect the results, the calculation procedures presented in this method must be modified, subject to the approval of the Administrator.

1.3 Other methods, as well as modifications to the procedure described herein, are also applicable for all of the above determinations. Examples of specific methods and modifications include: (1) A multi-point sampling method using an Orsat analyzer to analyze individual grab samples obtained at each point, and (2) a method using CO_2 or O_2 and stoichiometric calculations to determine excess air. These methods and modifications

may be used, but are subject to the approval of the Administrator.

1.4 Data Quality Objectives. Adherence to the requirements of this method will enhance the quality of the data obtained from air pollutant sampling methods.

2.0 Summary of Method

2.1 A gas sample is extracted from a stack by one of the following methods: (1) Single-point, grab sampling; (2) single-point, integrated sampling; or (3) multi-point, integrated sampling. The gas sample is analyzed for percent CO_2, percent O_2, and, if necessary, percent CO using an Orsat combustion gas analyzer.

3.0 Definitions [Reserved]

4.0 Interferences

4.1 Several compounds can interfere, to varying degrees, with the results of Orsat analyses. Compounds that interfere with CO2 concentration measurement include acid gases (*e.g.*, sulfur dioxide, hydrogen chloride); compounds that interfere with O_2 concentration measurement include unsaturated hydrocarbons (*e.g.*, acetone, acetylene), nitrous oxide, and ammonia. Ammonia reacts chemically with the O_2 absorbing solution, and when present in the effluent gas stream must be removed before analysis.

5.0 Safety

5.1 Disclaimer. This method may involve hazardous materials, operations, and equipment. This test method may not address all of the safety problems associated with its use. It is the responsibility of the user of this test method to establish appropriate safety and health practices and determine the applicability of regulatory limitations prior to performing this test method.

5.2 Corrosive Reagents. A typical Orsat analyzer requires four reagents: a gas-confining solution, CO_2 absorbent, O_2 absorbent, and CO absorbent. These reagents may contain potassium hydroxide, sodium hydroxide, cuprous chloride, cuprous sulfate, alkaline pyrogallic acid, and/or chromous chloride. Follow manufacturer's operating instructions and observe all warning labels for reagent use.

6.0 Equipment and Supplies

NOTE: As an alternative to the sampling apparatus and systems described herein, other sampling systems (*e.g.*, liquid displacement) may be used, provided such systems are capable of obtaining a representative sample and maintaining a constant sampling rate, and are, otherwise, capable of yielding acceptable results. Use of such systems is subject to the approval of the Administrator.

6.1 Grab Sampling and Integrated Sampling. Same as in Sections 6.1 and 6.2, respectively for Method 3.

6.2 Analysis. An Orsat analyzer only. For low CO_2 (less than 4.0 percent) or high O_2 (greater than 15.0 percent) concentrations, the measuring burette of the Orsat must have at least 0.1 percent subdivisions. For Orsat maintenance and operation procedures, follow the instructions recommended by the manufacturer, unless otherwise specified herein.

7.0 Reagents and Standards

7.1 Reagents. Same as in Method 3, Section 7.1.

7.2 Standards. Same as in Method 3, Section 7.2.

8.0 Sample Collection, Preservation, Storage, and Transport

NOTE: Each of the three procedures below shall be used only when specified in an applicable subpart of the standards. The use of these procedures for other purposes must have specific prior approval of the Administrator. A Fyrite-type combustion gas analyzer is not acceptable for excess air or emission rate correction factor determinations, unless approved by the Administrator. If both percent CO_2 and percent O_2 are measured, the analytical results of any of the three procedures given below may also be used for calculating the dry molecular weight (see Method 3).

8.1 Single-Point, Grab Sampling and Analytical Procedure.

8.1.1 The sampling point in the duct shall either be at the centroid of the cross section or at a point no closer to the walls than 1.0 m (3.3 ft), unless otherwise specified by the Administrator.

8.1.2 Set up the equipment as shown in Figure 3–1 of Method 3, making sure all connections ahead of the analyzer are tight. Leak-check the Orsat analyzer according to the procedure described in Section 11.5 of Method 3. This leak-check is mandatory.

8.1.3 Place the probe in the stack, with the tip of the probe positioned at the sampling point; purge the sampling line long enough to allow at least five exchanges. Draw a sample into the analyzer. For emission rate correction factor determinations, immediately analyze the sample for percent CO_2 or percent O_2, as outlined in Section 11.2. For excess air determination, immediately analyze the sample for percent CO_2, O_2, and CO, as outlined in Section 11.2, and calculate excess air as outlined in Section 12.2.

8.1.4 After the analysis is completed, leak-check (mandatory) the Orsat analyzer once again, as described in Section 11.5 of Method 3. For the results of the analysis to be valid, the Orsat analyzer must pass this leak-test before and after the analysis.

8.2 Single-Point, Integrated Sampling and Analytical Procedure.

8.2.1 The sampling point in the duct shall be located as specified in Section 8.1.1.

8.2.2 Leak-check (mandatory) the flexible bag as in Section 6.2.6 of Method 3. Set up the equipment as shown in Figure 3–2 of Method 3. Just before sampling, leak-check (mandatory) the train by placing a vacuum gauge at the condenser inlet, pulling a vacuum of at least 250 mm Hg (10 in. Hg), plugging the outlet at the quick disconnect, and then turning off the pump. The vacuum should remain stable for at least 0.5 minute. Evacuate the flexible bag. Connect the probe, and place it in the stack, with the tip of the probe positioned at the sampling point; purge the sampling line. Next, connect the bag, and make sure that all connections are tight.

8.2.3 Sample at a constant rate, or as specified by the Administrator. The sampling run must be simultaneous with, and for the same total length of time as, the pollutant emission rate determination. Collect at least 28 liters (1.0 ft^3) of sample gas. Smaller volumes may be collected, subject to approval of the Administrator.

8.2.4 Obtain one integrated flue gas sample during each pollutant emission rate determination. For emission rate correction factor determination, analyze the sample within 4 hours after it is taken for percent CO_2 or percent O_2 (as outlined in Section 11.2).

8.3 Multi-Point, Integrated Sampling and Analytical Procedure.

8.3.1 Unless otherwise specified in an applicable regulation, or by the Administrator, a minimum of eight traverse points shall be used for circular stacks having diameters less than 0.61 m (24 in.), a minimum of nine shall be used for rectangular stacks having equivalent diameters less than 0.61 m (24 in.), and a minimum of 12 traverse points shall be used for all other cases. The traverse points shall be located according to Method 1.

8.3.2 Follow the procedures outlined in Sections 8.2.2 through 8.2.4, except for the following: Traverse all sampling points, and sample at each point for an equal length of time. Record sampling data as shown in Figure 3–3 of Method 3.

9.0 Quality Control

9.1 Data Validation Using Fuel Factor. Although in most instances, only CO_2 or O_2 measurement is required, it is recommended that both CO_2 and O_2 be measured to provide a check on the quality of the data. The data validation procedure of Section 12.3 is suggested.

NOTE: Since this method for validating the CO_2 and O_2 analyses is based on combustion of organic and fossil fuels and dilution of the gas stream with air, this method does not apply to sources that (1) remove CO_2 or O_2 through processes other than combustion, (2) add O_2 (*e.g.*, oxygen enrichment) and N_2 in proportions different from that of air, (3) add CO_2 (*e.g.*, cement or lime kilns), or (4) have no fuel factor, F_O, values obtainable (*e.g.*, extremely variable waste mixtures). This method validates the measured proportions of CO_2 and O_2 for fuel type, but the method does not detect sample dilution resulting from leaks during or after sample collection. The method is applicable for samples collected downstream of most lime or limestone flue-gas desulfurization units as the CO_2 added or removed from the gas stream is not significant in relation to the total CO_2 concentration. The CO_2 concentrations from other types of scrubbers using only water or basic slurry can be significantly affected and would render the fuel factor check minimally useful.

10.0 Calibration and Standardization

10.1 Analyzer. The analyzer and analyzer operator technique should be audited periodically as follows: take a sample from a manifold containing a known mixture of CO_2 and O_2, and analyze according to the procedure in Section 11.3. Repeat this procedure until the measured concentration of three consecutive samples agrees with the stated value ±0.5 percent. If necessary, take corrective action, as specified in the analyzer users manual.

10.2 Rotameter. The rotameter need not be calibrated, but should be cleaned and maintained according to the manufacturer's instruction.

11.0 Analytical Procedure

11.1 Maintenance. The Orsat analyzer should be maintained according to the manufacturers specifications.

11.2 Grab Sample Analysis. To ensure complete absorption of the CO_2, O_2, or if applicable, CO, make repeated passes through each absorbing solution until two consecutive readings are the same. Several passes (three or four) should be made between readings. (If constant readings cannot be obtained after three consecutive readings, replace the absorbing solution.) Although in most cases, only CO_2 or O_2 concentration is required, it is recommended that both CO_2 and O_2 be measured, and that the procedure in Section 12.3 be used to validate the analytical data.

NOTE: Since this single-point, grab sampling and analytical procedure is normally conducted in conjunction with a single-point, grab sampling and analytical procedure for a pollutant, only one analysis is ordinarily conducted. Therefore, great care must be taken to obtain a valid sample and analysis.

11.3 Integrated Sample Analysis. The Orsat analyzer must be leak-checked (see Section 11.5 of Method 3) before the analysis. If excess air is desired, proceed as follows: (1) within 4 hours after the sample is taken, analyze it (as in Sections 11.3.1 through 11.3.3) for percent CO_2, O_2, and CO; (2) determine the percentage of the gas that is N_2 by subtracting the sum of the percent CO_2, percent O_2, and percent CO from 100 percent; and (3) calculate percent excess air, as outlined in Section 12.2.

11.3.1 To ensure complete absorption of the CO_2, O_2, or if applicable, CO, follow the procedure described in Section 11.2.

NOTE: Although in most instances only CO_2 or O_2 is required, it is recommended that both CO_2 and O_2 be measured, and that the procedures in Section 12.3 be used to validate the analytical data.

11.3.2 Repeat the analysis until the following criteria are met:

11.3.2.1 For percent CO_2, repeat the analytical procedure until the results of any three analyses differ by no more than (a) 0.3 percent by volume when CO_2 is greater than 4.0 percent or (b) 0.2 percent by volume when CO_2 is less than or equal to 4.0 percent. Average three acceptable values of percent CO_2, and report the results to the nearest 0.2 percent.

11.3.2.2 For percent O_2, repeat the analytical procedure until the results of any three analyses differ by no more than (a) 0.3 percent by volume when O_2 is less than 15.0 percent or (b) 0.2 percent by volume when O_2 is greater than or equal to 15.0 percent. Average the three acceptable values of percent O_2, and report the results to the nearest 0.1 percent.

11.3.2.3 For percent CO, repeat the analytical procedure until the results of any three analyses differ by no more than 0.3 percent. Average the three acceptable values of percent CO, and report the results to the nearest 0.1 percent.

11.3.3 After the analysis is completed, leak-check (mandatory) the Orsat analyzer once again, as described in Section 11.5 of Method 3. For the results of the analysis to be valid, the Orsat analyzer must pass this leak-test before and after the analysis.

11.4 Standardization. A periodic check of the reagents and of operator technique should be conducted at least once every three series of test runs as indicated in Section 10.1.

12.0 Calculations and Data Analysis

12.1 Nomenclature. Same as Section 12.1 of Method 3 with the addition of the following:

%EA=Percent excess air.

0.264=Ratio of O_2 to N_2 in air, v/v.

12.2 Percent Excess Air. Determine the percentage of the gas that is N_2 by subtracting the sum of the percent CO_2, percent CO, and percent O_2 from 100 percent. Calculate the percent excess air (if applicable) by substituting the appropriate values of percent O_2, CO, and N_2 into Equation 3B–1.

$$\%EA = \frac{\%O_2 - 0.5\ \%CO}{0.264\ \%N_2 - (\%O_2 - 0.5\ \%CO)} \times 100 \qquad \text{Eq. 3B-1}$$

NOTE: The equation above assumes that ambient air is used as the source of O_2 and that the fuel does not contain appreciable amounts of N_2 (as do coke oven or blast furnace gases). For those cases when appreciable amounts of N_2 are present (coal, oil, and natural gas do not contain appreciable amounts of N_2) or when oxygen enrichment is used, alternative methods, subject to approval of the Administrator, are required.

12.3 Data Validation When Both CO_2 and O_2 Are Measured.

12.3.1 Fuel Factor, F_o. Calculate the fuel factor (if applicable) using Equation 3B–2:

$$F_o = \frac{20.9 - \%O_2}{\%CO_2} \qquad \text{Eq. 3B-2}$$

Where:

$\%O_2$=Percent O_2 by volume, dry basis.

$\%CO_2$=Percent CO_2 by volume, dry basis.

20.9=Percent O_2 by volume in ambient air.

If CO is present in quantities measurable by this method, adjust the O_2 and CO_2 values using Equations 3B–3 and 3B–4 before performing the calculation for F_o:

$$\%CO_2(adj) = \%CO_2 + \%CO \qquad \text{Eq. 3B-3}$$

$$\%O_2(adj) = \%O_2 - 0.5\ \%CO \qquad \text{Eq. 3B-4}$$

Where:

%CO=Percent CO by volume, dry basis.

12.3.2 Compare the calculated F_o factor with the expected F_o values. Table 3B–1 in Section 17.0 may be used in establishing acceptable ranges for the expected F_o if the fuel being burned is known. When fuels are burned in combinations, calculate the combined fuel F_d and F_c factors (as defined in Method 19, Section 12.2) according to the procedure in Method 19, Sections 12.2 and 12.3.

Then calculate the F_o factor according to Equation 3B–5.

$$F_o = \frac{0.209\ F_d}{F_c} \qquad \text{Eq. 3B-5}$$

12.3.3 Calculated F_o values, beyond the acceptable ranges shown in this table, should be investigated before accepting the test results. For example, the strength of the solutions in the gas analyzer and the analyzing technique should be checked by sampling and analyzing a known concentration, such as air; the fuel factor should be reviewed and verified. An acceptability range of ±12 percent is appropriate for the F_o factor of mixed fuels with variable fuel ratios. The level of the emission rate relative to the compliance level should be considered in determining if a retest is appropriate; i.e., if the measured emissions are much lower or much greater than the compliance limit, repetition of the test would not significantly change the compliance status of the source and would be unnecessarily time consuming and costly.

13.0 Method Performance [Reserved]

14.0 Pollution Prevention [Reserved]

15.0 Waste Management [Reserved]

16.0 References

Same as Method 3, Section 16.0.

17.0 Tables, Diagrams, Flowcharts, and Validation Data

TABLE 3B–1—F_o FACTORS FOR SELECTED FUELS

Fuel type	F_o range
Coal:	
Anthracite and lignite	1.016–1.130
Bituminous	1.083–1.230
Oil:	
Distillate	1.260–1.413
Residual	1.210–1.370
Gas:	
Natural	1.600–1.836
Propane	1.434–1.586
Butane	1.405–1.553
Wood	1.000–1.120
Wood bark	1.003–1.130

METHOD 3C—DETERMINATION OF CARBON DIOXIDE, METHANE, NITROGEN, AND OXYGEN FROM STATIONARY SOURCES

1. Applicability and Principle

1.1 Applicability. This method applies to the analysis of carbon dioxide (CO_2), methane (CH_4), nitrogen (N_2), and oxygen (O_2) in samples from municipal solid waste landfills and other sources when specified in an applicable subpart.

1.2 Principle. A portion of the sample is injected into a gas chromatograph (GC) and the CO_2, CH_4, N_2, and O_2 concentrations are determined by using a thermal conductivity detector (TCD) and integrator.

2. Range and Sensitivity

2.1 Range. The range of this method depends upon the concentration of samples. The analytical range of TCD's is generally between approximately 10 ppmv and the upper percent range.

2.2 Sensitivity. The sensitivity limit for a compound is defined as the minimum detectable concentration of that compound, or the concentration that produces a signal-to-noise ratio of three to one. For CO_2, CH_4, N_2, and O_2, the sensitivity limit is in the low ppmv range.

3. Interferences

Since the TCD exhibits universal response and detects all gas components except the carrier, interferences may occur. Choosing the appropriate GC or shifting the retention times by changing the column flow rate may help to eliminate resolution interferences.

To assure consistent detector response, helium is used to prepare calibration gases. Frequent exposure to samples or carrier gas containing oxygen may gradually destroy filaments.

4. Apparatus

4.1 Gas Chromatograph. GC having at least the following components:

4.1.1 Separation Column. Appropriate column(s) to resolve CO_2, CH_4, N_2, O_2, and other gas components that may be present in the sample.

4.1.2 Sample Loop. Teflon or stainless steel tubing of the appropriate diameter. NOTE: Mention of trade names or specific products does not constitute endorsement or recommendation by the U. S. Environmental Protection Agency.

4.1.3 Conditioning System. To maintain the column and sample loop at constant temperature.

4.1.4 Thermal Conductivity Detector.

4.2 Recorder. Recorder with linear strip chart. Electronic integrator (optional) is recommended.

4.3 Teflon Tubing. Diameter and length determined by connection requirements of cylinder regulators and the GC.

4.4 Regulators. To control gas cylinder pressures and flow rates.

4.5 Adsorption Tubes. Applicable traps to remove any O_2 from the carrier gas.

5. Reagents

5.1 Calibration and Linearity Gases. Standard cylinder gas mixtures for each

compound of interest with at least three concentration levels spanning the range of suspected sample concentrations. The calibration gases shall be prepared in helium.

5.2 Carrier Gas. Helium, high-purity.

6. Analysis

6.1 Sample Collection. Use the sample collection procedures described in Methods 3 or 25C to collect a sample of landfill gas (LFG).

6.2 Preparation of GC. Before putting the GC analyzer into routine operation, optimize the operational conditions according to the manufacturer's specifications to provide good resolution and minimum analysis time. Establish the appropriate carrier gas flow and set the detector sample and reference cell flow rates at exactly the same levels. Adjust the column and detector temperatures to the recommended levels. Allow sufficient time for temperature stabilization. This may typically require 1 hour for each change in temperature.

6.3 Analyzer Linearity Check and Calibration. Perform this test before sample analysis. Using the gas mixtures in section 5.1, verify the detector linearity over the range of suspected sample concentrations with at least three points per compound of interest. This initial check may also serve as the initial instrument calibration. All subsequent calibrations may be performed using a single-point standard gas provided the calibration point is within 20 percent of the sample component concentration. For each instrument calibration, record the carrier and detector flow rates, detector filament and block temperatures, attenuation factor, injection time, chart speed, sample loop volume, and component concentrations. Plot a linear regression of the standard concentrations versus area values to obtain the response factor of each compound. Alternatively, response factors of uncorrected component concentrations (wet basis) may be generated using instrumental integration. NOTE: Peak height may be used instead of peak area throughout this method.

6.4 Sample Analysis. Purge the sample loop with sample, and allow to come to atmospheric pressure before each injection. Analyze each sample in duplicate, and calculate the average sample area (A). The results are acceptable when the peak areas for two consecutive injections agree within 5 percent of their average. If they do not agree, run additional samples until consistent area data are obtained. Determine the tank sample concentrations according to section 7.2.

7. Calculations

Carry out calculations retaining at least one extra decimal figure beyond that of the acquired data. Round off results only after the final calculation.

7.1 Nomenclature.

A=average sample area

B_w=moisture content in the sample, fraction

C=component concentration in the sample, dry basis, ppmv

C_t=calculated NMOC concentration, ppmv C equivalent

C_{tm}=measured NMOC concentration, ppmv C equivalent

P_{bar}=barometric pressure, mm Hg

P_{ti}=gas sample tank pressure after evacuation, mm Hg absolute

P_t=gas sample tank pressure after sampling, but before pressurizing, mm Hg absolute

P_{tf}=final gas sample tank pressure after pressurizing, mm Hg absolute

P_w=vapor pressure of H_2O (from table 3C–1), mm Hg

T_{ti}=sample tank temperature before sampling, °K

T_t=sample tank temperature at completion of sampling, °K

T_{tf}=sample tank temperature after pressurizing, °K

r=total number of analyzer injections of sample tank during analysis (where j=injection number, 1 . . . r)

R=Mean calibration response factor for specific sample component, area/ppmv

TABLE 3C–1—MOISTURE CORRECTION

Temperature °C	Vapor Pressure of H_2O, mm Hg
4	6.1
6	7.0
8	8.0
10	9.2
12	10.5
14	12.0
16	13.6
18	15.5
20	17.5
22	19.8
24	22.4
26	25.2
28	28.3
30	31.8

7.2 Concentration of Sample Components. Calculate C for each compound using Equations 3C–1 and 3C–2. Use the temperature and barometric pressure at the sampling site to calculate Bw. If the sample was diluted with helium using the procedures in Method 25C, use Equation 3C–3 to calculate the concentration.

$$B_w = \frac{P_w}{P_{bar}} \qquad 3C\text{-}1$$

$$C = \frac{A}{R(1 - B_w)} \qquad 3C\text{-}2$$

$$C = \frac{\frac{P_{tf}}{T_{tf}}}{\frac{P_t}{T_t} - \frac{P_{ti}}{T_{ti}}} \quad \frac{A}{R(1 - B_w)} \qquad 3C\text{-}3$$

8. Bibliography

1. McNair, H.M., and E.J. Bonnelli. Basic Gas Chromatography. Consolidated Printers, Berkeley, CA. 1969.

[36 FR 24877, Dec. 23, 1971]

EDITORIAL NOTE: For FEDERAL REGISTER citations affecting part 60, appendix A–2, see the List of CFR Sections Affected, which appears in the Finding Aids section of the printed volume and on GPO Access.

APPENDIX A–3 TO PART 60—TEST METHODS 4 THROUGH 5I

Method 4—Determination of moisture content in stack gases
Method 5—Determination of particulate matter emissions from stationary sources
Method 5A—Determination of particulate matter emissions from the asphalt processing and asphalt roofing industry
Method 5B—Determination of nonsulfuric acid particulate matter emissions from stationary sources
Method 5C [Reserved]
Method 5D—Determination of particulate matter emissions from positive pressure fabric filters
Method 5E—Determination of particulate matter emissions from the wool fiberglass insulation manufacturing industry
Method 5F—Determination of nonsulfate particulate matter emissions from stationary sources
Method 5G—Determination of particulate matter emissions from wood heaters (dilution tunnel sampling location)
Method 5H—Determination of particulate emissions from wood heaters from a stack location
Method 5I—Determination of Low Level Particulate Matter Emissions From Stationary Sources

The test methods in this appendix are referred to in §60.8 (Performance Tests) and §60.11 (Compliance With Standards and Maintenance Requirements) of 40 CFR part 60, subpart A (General Provisions). Specific uses of these test methods are described in the standards of performance contained in the subparts, beginning with Subpart D.

Within each standard of performance, a section title ''Test Methods and Procedures'' is provided to: (1) Identify the test methods to be used as reference methods to the facility subject to the respective standard and (2) identify any special instructions or conditions to be followed when applying a method to the respective facility. Such instructions (for example, establish sampling rates, volumes, or temperatures) are to be used either in addition to, or as a substitute for procedures in a test method. Similarly, for sources subject to emission monitoring requirements, specific instructions pertaining to any use of a test method as a reference method are provided in the subpart or in Appendix B.

Inclusion of methods in this appendix is not intended as an endorsement or denial of their applicability to sources that are not subject to standards of performance. The methods are potentially applicable to other sources; however, applicability should be confirmed by careful and appropriate evaluation of the conditions prevalent at such sources.

The approach followed in the formulation of the test methods involves specifications for equipment, procedures, and performance. In concept, a performance specification approach would be preferable in all methods because this allows the greatest flexibility to the user. In practice, however, this approach is impractical in most cases because performance specifications cannot be established. Most of the methods described herein, therefore, involve specific equipment specifications and procedures, and only a few methods in this appendix rely on performance criteria.

Minor changes in the test methods should not necessarily affect the validity of the results and it is recognized that alternative and equivalent methods exist. Section 60.8 provides authority for the Administrator to specify or approve (1) equivalent methods, (2) alternative methods, and (3) minor changes in the methodology of the test methods. It should be clearly understood that unless otherwise identified all such methods and changes must have prior approval of the Administrator. An owner employing such methods or deviations from the test methods without obtaining prior approval does so at the risk of subsequent disapproval and retesting with approved methods.

Within the test methods, certain specific equipment or procedures are recognized as being acceptable or potentially acceptable and are specifically identified in the methods. The items identified as acceptable options may be used without approval but